V-110
D STAGE SUCTION SCRUBBER
10mm O.D. x 1575mm S/S
516 kPag @ −28.8°C/149°C
C.A.: 3.18mm
FULL X-RAY, PWHT
316L SS MESH MIST EXTRACTOR

V-120
3RD STAGE SUCTION SCRUBBER
508mm O.D. x 1422mm S/S
9067 kPag @ −28.8°C/149°C
C.A.: 3.18mm
FULL X-RAY, PWHT
c/w 316L SS MESH PAD MIST EXTRACTOR

V-121
1ST STAGE SUCTION BOTTLE
457mm O.D. x 1930mm S/S
4516 kPag @ −28.8°C/149°C
C.A.: 3.18mm
FULL X-RAY, PWHT

V-122
1ST STAGE DISCHARGE BOTTLE
457mm O.D. x 1981mm S/S
4447 kPag @ −28.8°C/176°C
C.A.: 3.18mm
FULL X-RAY, PWHT

V-123
2ND STAGE SUCTION BOTTLE
457mm O.D. x 1118mm S/S
4516 kPa @ −28.8°C/149°C
C.A.: 3.18mm
FULL X-RAY, PWHT

V-124
2ND STAGE DISCHARGE BOTTLE
457mm O.D. x 1016mm S/S
8908 kPa @ −28.8°C/176°C
C.A.: 3.18mm
FULL X-RAY, PWHT

V-125
3RD STAGE SUCTION BOTTLE
356mm O.D. x 1067mm S/S
9067 kPag @ −28.8°C/149°C
C.A.: 3.18mm
FULL X-RAY, PWHT

V-126
3RD STAGE DISCHARGE BOTTLE
324mm O.D. x 1118mm S/S
11032 kPag @ −28.8°C/176°C
C.A.: 3.18mm
FULL X-RAY, PWHT

KC-102
2ND STAGE COMPRESSOR CYLINDER
244mm ø (ARIEL 9.625 K)
8756 kPag MAWP

KC-103
3RD STAGE COMPRESSOR CYLINDER
159mm ø (ARIEL 6.25 K)
14134 kPag MAWP

AC-210
1ST STAGE INTERCOOLER
DUTY: 268.2 kW
4447 kPag @ −28.8°C/176°C
C.A. 3.18mm
FULL X-RAY, PWHT

AC-211
2ND STAGE INTERCOOLER
DUTY: 263.0 kW
8908 kPag @ −28.8°C/176°C
C.A. 3.18mm
FULL X-RAY, PWHT
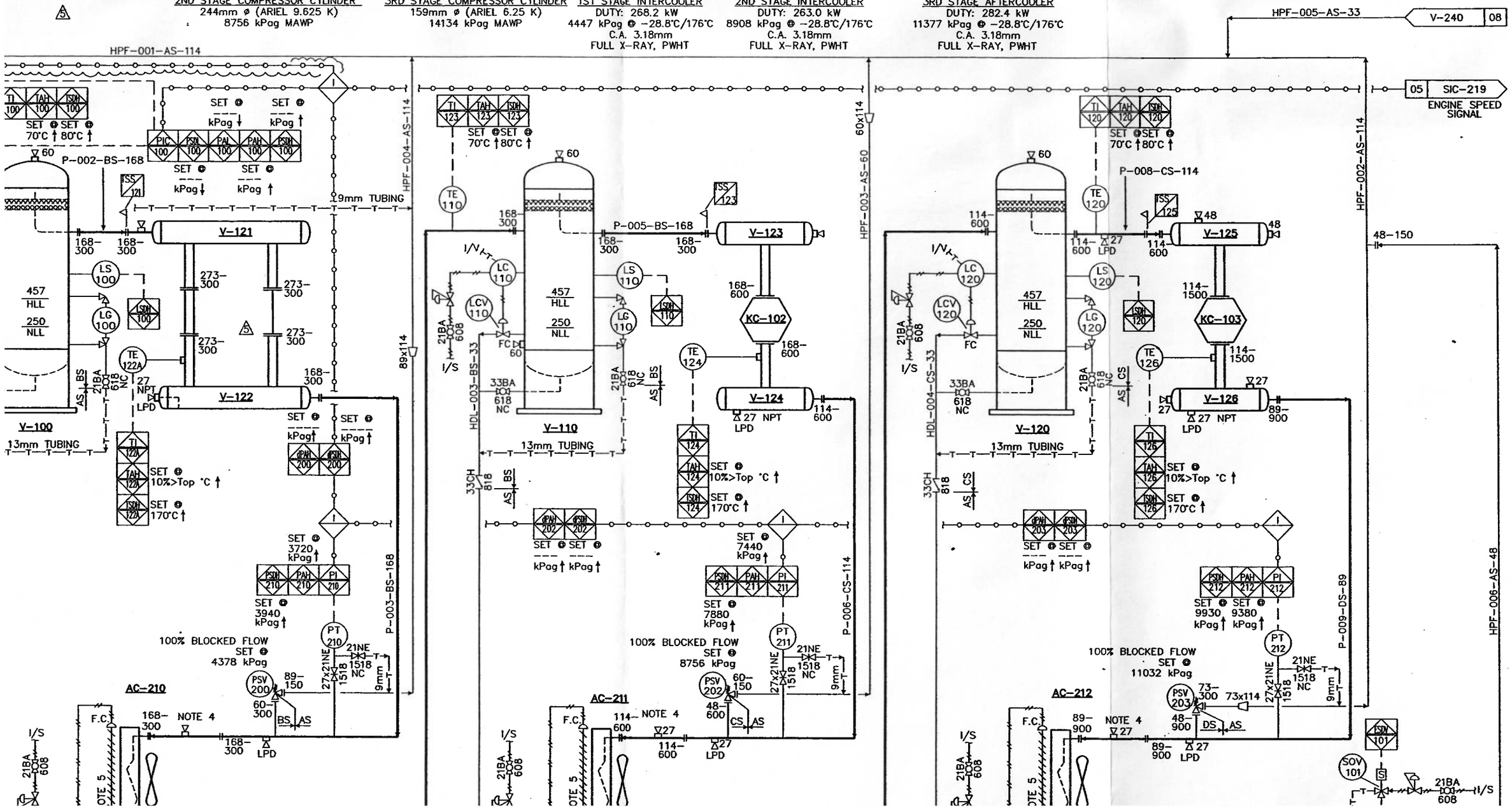
AC-212
3RD STAGE AFTERCOOLER
DUTY: 282.4 kW
11377 kPag @ −28.8°C/176°C
C.A. 3.18mm
FULL X-RAY, PWHT