SIN-1306-PID-PR-000002

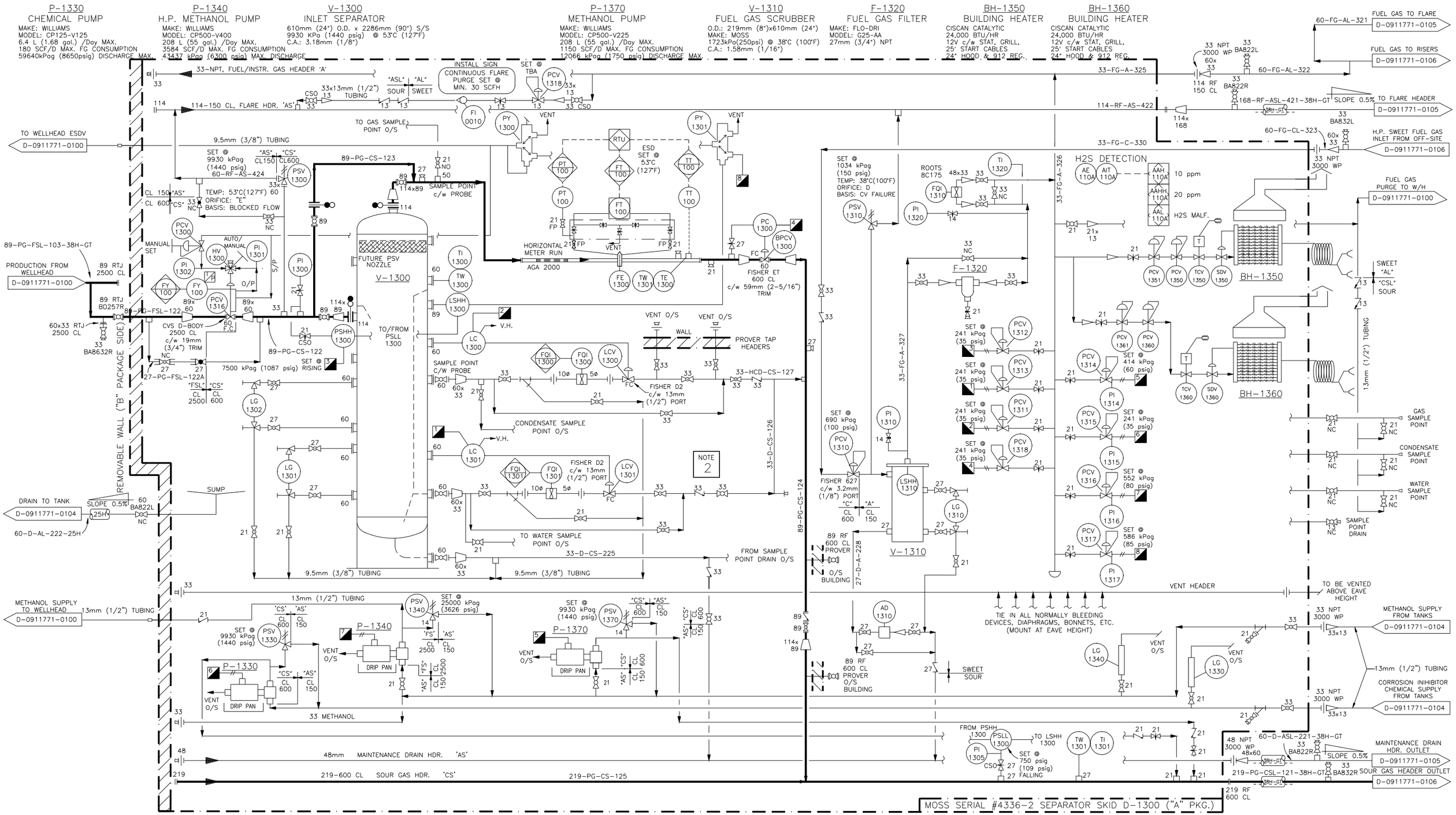

Uncontrolled When Printed