SIN-1306-PID-PR-000003

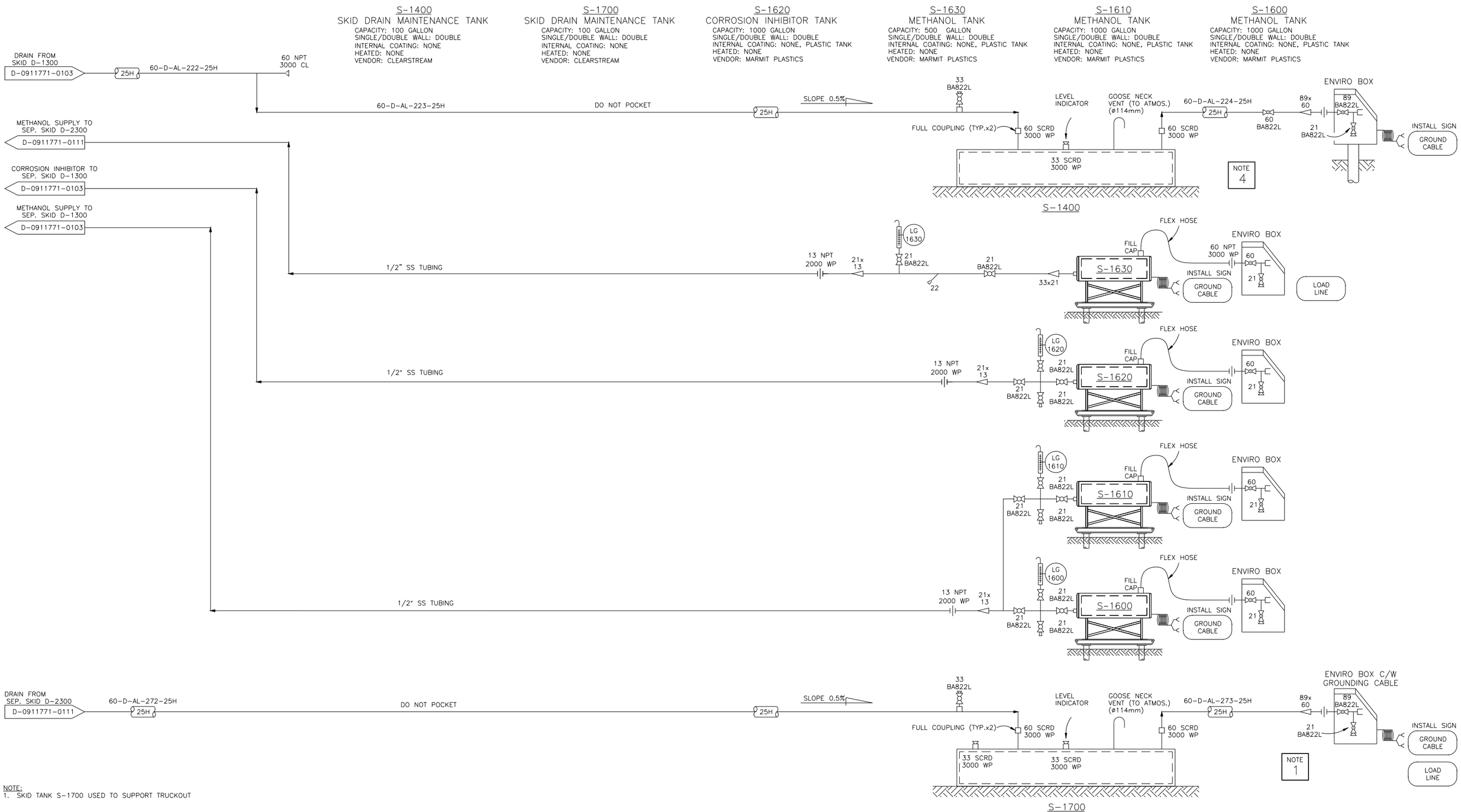

NOTE:
1. SKID TANK S-1700 USED TO SUPPORT TRUCKOUT
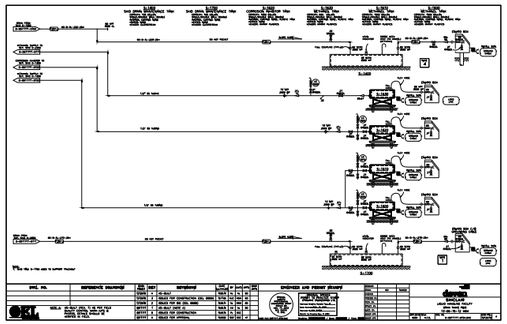
Uncontrolled When Printed