Vendor: 5BLUE

Doc #: 5B1108-02-FM-VM-001

Vendor Rev #: 1AB

Description: VENDOR DATA MANUAL

devon

REVIEW STAMP

PROJECT NO. _____

1. REVIEWED & ACCEPTED. MANUFACTURE MAY PROCEED ☐
2. REVIEWED & ACCEPTED AS MARKED. REVISE & RE-SUBMIT. MANUFACTURE MAY PROCEED ☑
3. REVISE AS MARKED & RE-SUBMIT. MANUFACTURE SHALL NOT PROCEED ☐
4. REVIEW NOT REQUIRED. FOR INFORMATION ONLY. MANUFACTURE MAY PROCEED ☐

Acceptance in any of these categories in no way relieves the Contractor/Supplier of its responsibility for the due and proper performance of the Works in accordance with the Contract/Purchase Order.

Name ..... Dave Maberley .....

Signed ..... DAM ..... Date ..... Jan.5,2015 .....

DATE	JOB NO.	PURCHASE ORDER NO.
12/11/2014	407014-00120	ME-POD-0022
VTRI-2622	DEVON MR. NO.	
	FE-CPF-M022	

EQUIP. NO.	WORLEYPARSONS VP NO.	REV.
002-PK-01-1600	407014-00120-ME-POD-0022-0360	2

1. All QA/QC Records have been supplied and are accepted, as per the P.O. SDDR.
2. Worley Parson's comment below is to be addressed by the Site contractor, and the information is to be submitted for review.

WorleyParsons
resources & energy

REVIEW STAMP

PROJECT NO. _____

1. REVIEWED & ACCEPTED. MANUFACTURE MAY PROCEED ☐
2. REVIEWED & ACCEPTED AS MARKED. REVISE & RE-SUBMIT. MANUFACTURE MAY PROCEED ☑
3. REVISE AS MARKED & RE-SUBMIT. MANUFACTURE SHALL NOT PROCEED ☐
4. REVIEW NOT REQUIRED. FOR INFORMATION ONLY. MANUFACTURE MAY PROCEED ☐

Acceptance in any of these categories in no way relieves the Contractor/Supplier of its responsibility for the due and proper performance of the Works in accordance with the Contract/Purchase Order.

Name ..... MHo .....

Signed ..... Date ..... 19 Dec 14 .....

THIS STAMP GOVERNS THE FINAL CODING OF THE MANUFACTURERS DATA BOOK

NOTE: SIGN OFF OF WORLEYPARSONS APPROVAL STAMP IS ONLY APPLICABLE TO THE ENGINEERING PORTION OF THE MANUFACTURERS DATA BOOK. QA/QC PORTION TO BE REVIEWED AND APPROVED BY DEVON

The design condition for the glycol heater (page 78) does not meet the site utility glycol requirements. Site contractor to verify the building heater design and make changes as required. NO further action required by 5Blue

Vendor: 5BLUE

Doc #: 5B1108-02-FM-VM-001

Vendor Rev #: 1AB

Description: VENDOR DATA MANUAL

devon

REVIEW STAMP

PROJECT NO. _____

1. REVIEWED & ACCEPTED. MANUFACTURE MAY PROCEED ☐
2. REVIEWED & ACCEPTED AS MARKED. REVISE & RE-SUBMIT. MANUFACTURE MAY PROCEED ☐
3. REVISE AS MARKED & RE-SUBMIT. MANUFACTURE SHALL NOT PROCEED ☐
4. REVIEW NOT REQUIRED. FOR INFORMATION ONLY. MANUFACTURE MAY PROCEED ☐

Acceptance in any of these categories in no way relieves the Contractor/Supplier of its responsibility for the due and proper performance of the Works in accordance with the Contract/Purchase Order.

Name .....

Signed ..... Date .....

DATE	JOB NO.	PURCHASE ORDER NO.
12/11/2014	407014-00120	ME-POD-0022
VTRI-2622	DEVON MR. NO.	
	FE-CPF-M022	

EQUIP. NO.	WORLEYPARSONS VP NO.	REV.
002-PK-01-1600	407014-00120-ME-POD-0022-0360	2

WorleyParsons
resources & energy

REVIEW STAMP

PROJECT NO. _____

1. REVIEWED & ACCEPTED. MANUFACTURE MAY PROCEED ☐
2. REVIEWED & ACCEPTED AS MARKED. REVISE & RE-SUBMIT. MANUFACTURE MAY PROCEED ☑
3. REVISE AS MARKED & RE-SUBMIT. MANUFACTURE SHALL NOT PROCEED ☐
4. REVIEW NOT REQUIRED. FOR INFORMATION ONLY. MANUFACTURE MAY PROCEED ☐

Acceptance in any of these categories in no way relieves the Contractor/Supplier of its responsibility for the due and proper performance of the Works in accordance with the Contract/Purchase Order.

Name ..... MHo

Signed ..... Date 19 Dec 14

THIS STAMP GOVERNS THE FINAL CODING OF THE MANUFACTURERS DATA BOOK

NOTE: SIGN OFF OF WORLEYPARSONS APPROVAL STAMP IS ONLY APPLICABLE TO THE ENGINEERING PORTION OF THE MANUFACTURERS DATA BOOK. QA/QC PORTION TO BE REVIEWED AND APPROVED BY DEVON

The design condition for the glycol heater (page 78) does not meet the site utility glycol requirements. Site contractor to verify the building heater design and make changes as required. NO further action required by 5Blue

VENDOR DATA MANUAL

For

CNRL

C/O WORLEY PARSONS

COMPRESSED CARDIUM GAS SEPARATOR PACKAGE
REQUISITION: 407014-00120
PO #: 4100001262-2

5BLUE JOB NUMBER: 5B1108-02

5BLUE DOC NUMBER: 5B1108-02-FM-VM-001 REV 1 AB

2303-8th Street, Nisku Alberta, T9E-7Z3 CANADA

VDM TABLE OF CONTENTS
DEVON ENERGY
5BLUE PROJECT: 5B1108

A. MECHANICAL

- A2 Dimensional Outline, Layout & Mounting Drawings (includes Locations & Details of base plate and anchor bolt, etc.)
- A3 List of Connections by Buyer including Detailed Location (Piping, Seal Flush, Testing, Electrical, Instrumentation, etc.)
- A4 Plans, Sections, Detailed Drawings with Bills of Materials
- A5 Piping Isometric Drawings with Bills of Materials with P.Eng Stamp
- A7 Structural Steel Drawings (Skid, Pipe Supports, Platforms, Buildings, etc.)
- A8 Supports or Foundation Load Diagram
- A9 Shipping Weights and Dimensions
- A10 Lifting Diagram / Instruction
- A11 Centre of Gravity of Each Lift
- A13 Facsimile of Nameplate Stamping
- A14 Datasheet for major equipment
- A18 As-Built Clearances
- A26 Cathodic protection system design & layout
- A30 3D Model including Native File(s)
- A31 Detail Fabrication Drawings

B. QA/QC RECORDS

- B1 Hydro-test Certificate
- B2 Hydro-test Chart
- B3 PWHT Certificate
- B4 PWHT Records & Charts
- B5 Radiography Reports
- B6 Magnetic Particle Inspection Reports
- B7 Liquid Penetrant Inspection Reports
- B8 Hardness Testing Report
- B9 Impact Testing Report
- B10 External Coating System, Surface Prep, Installation, Holiday and DFT Inspection Reports
- B11 Internal Coating System, Surface Prep, Installation, Holiday and DFT Inspection Reports
- B12 Weld Maps

B13 Certified Welding Procedure Specifications (WPS)
B14 Certified Mill Test Reports
B15 Function Test Report
B16 Third Party Supplier Inspection Reports
B18 Code Registration Certificate
B19 Hydrostatic Testing Procedure
B20 Copy of Quality Program
B21 Inspection and Test Plan (Inc. Sign-off Record)
B30 Weld Procedure Qualification Record (WPQR)
B31 Non-Destructive Exam Procedures (NDE)
B33 Weld Repair Procedure
B34 Contractor Certifications (Quality System Cert. eg. ISO 9001, ASME Sect VIII DIV 1, 2 and/or 3, Provincial CSA B51, ASME B31.3, CWB, AWS etc.)
B36 Shop & Field Positive Material Identification (PMI) Results
B37 UT Report
B38 Shop Dry Out Procedure
B40 Insulation and Jacketing Inspection and Acceptance Report
B42 NDE / NDT Test Reports (not mentioned elsewhere)
B46 Welder Log & Statistics
B54 PSV Shop Pop & Blowdown Test Records
B55 Non-Conformance Reports (NCR)

C. CALCULATION

C1 Vessel Mechanical Design (Including Nozzle Repad, Vessel Support, and Local Stress Calculations)
C2 Piping Flexibility / Stress (Including Locations of Piping Anchor / Guide Points)
C7 PSV Sizing Basis and Calculations (Incl. Rupture disks if applicable)
C8 Control Valve Sizing
C9 Skid Design Calculations
C10 Process Design Calculations (CPU Loading calcs)
C19 Relief Load Calculations
C23 Flowmeter Sizing Calculation
C27 Insulation and Selling Thickness Calculation Including Heat Loss and Skin Temperature
C28 Vessel Lifting Lug Calculation Including Vessel Load Stress
C32 Thermowell Stress and Wake Frequency Calc
C33 HVAC Design Calculation
C34 Enclosure Ventilation System Calculation

D. ELECTRICAL

- D1 Termination Drawings
- D10 Instrument / F&G Installation Details
- D20 Electrical Equipment SELLER Drawings
- D21 Equipment Seller Catalogue Sheets
- D23 Junction box detail drawings
- D24 Equipment wiring diagram
- D25 Motor datasheet
- D30 Electrical Bills of Material

E. INSTRUMENTATION

- E5 Wiring Diagrams
- E6 ISA Datasheet for each item including Manufacturer and Model No
- E13 Instrument Calibration Test Record
- E16 Instrument Seller Catalog Information
- E21 Instrument Index
- E22 PSV Certificate of Compliance
- E23 Certified Dimensional Drawings
- E26 Tubing Schematic
- E29 Canadian Registration Number (CRN) Certificate

F. OTHER DOCUMENTATION

- F3 Recommended Spare Parts with Prices for Start-up
- F4 Recommended Spare Parts with Prices for 2 Years' Operation
- F6 Installation, Operation & Maintenance Manual
- F9 Approval Agency Documents, Certificates & Labels as Applicable (e.g. Electrical equipment cert for Hazardous Area)
- F11 CRN Number(s) from Local Authority having Jurisdiction all for Pressure Equipment, Piping and Fittings as per CSA B.51 Code
- F14 Preservation and Storage Procedure
- F15 Piping and Instrumentation Diagrams
- F16 Troubleshooting Chart
- F19 Lube Oil/Operating Fluids Schedule
- F20 Release for shipping certificate
- F23 Trade Personnel Qualifications
- F24 Local authority having jurisdiction certificate of package electrical installation per CSA Area classification

F25 Data Book & IOM Manual Index
F26 Line Designation Table
F27 Utility consumption list (including instrument air and electricity, UPS, Heating or Cooling Medium etc.)
F28 Equipment Storage & Preservation Records
F29 Compliance Statement-That the Supplier confirms complete compliance with the Requisition and referenced documents or lists specific deviations and exceptions

A. MECHANICAL

2303-8th Street, Nisku Alberta, T9E-7Z3 CANADA

5Blue
Process Equipment Inc.

A2 Dimensional Outline, Layout & Mounting Drawings (includes Locations & Details of base plate and anchor bolt, etc.)

2303-8th Street, Nisku Alberta, T9E-7Z3 CANADA

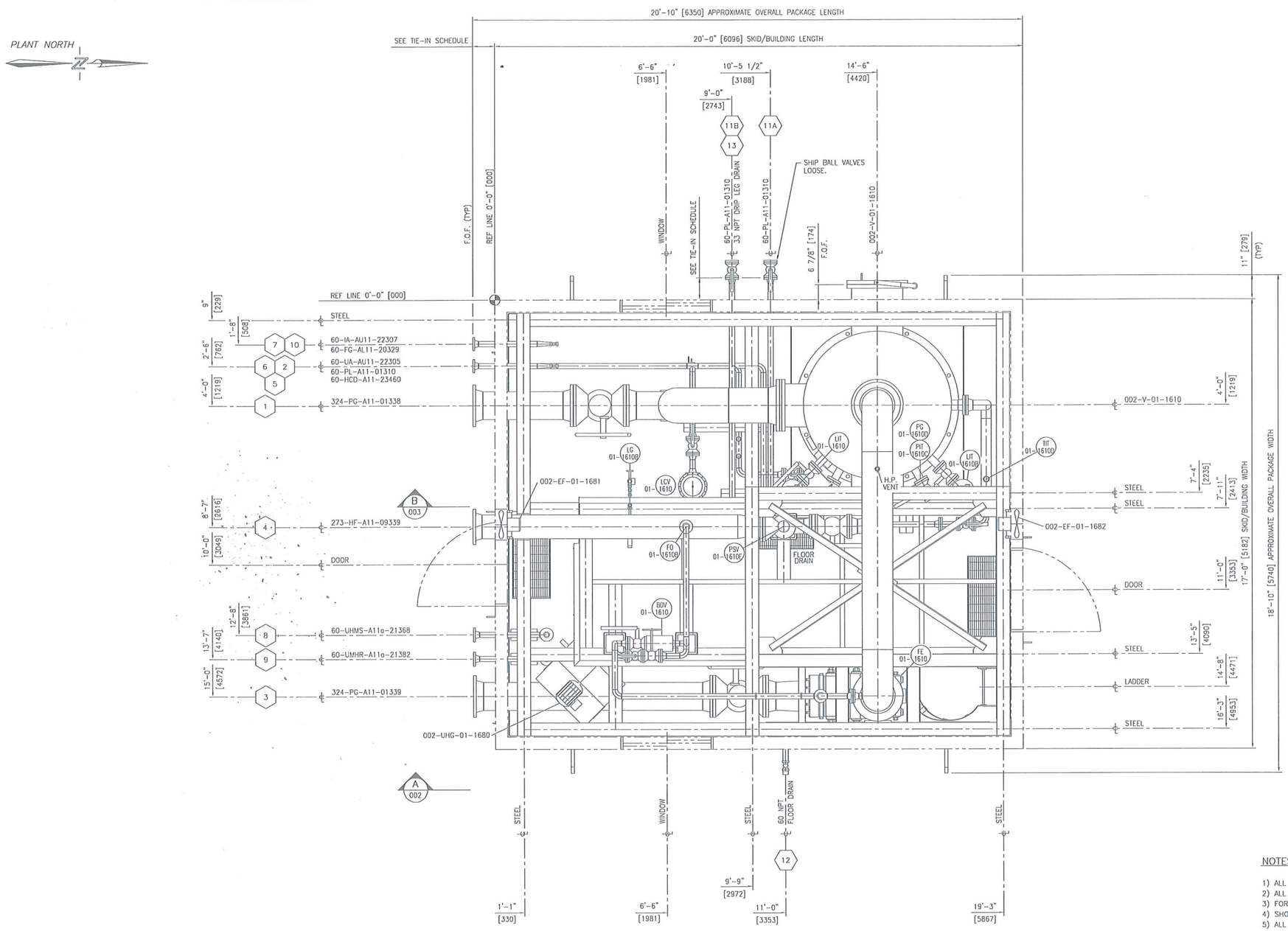

PLAN VIEW
SCALE 1/2"=1'-0"

TIE-IN SCHEDULE

1	324 CL. 150 RF FROM CARDIUM GAS INLET EL. 2'-0" [610] B.O.P. NOZZLE PROJ. = 10" [254]	5	60 CL. 150 RF CLOSED DRAIN TO HEADER EL. 9" [229] ℄ NOZZLE PROJ. = 10" [254]
2	60 CL. 150 RF CONDENSATE TO STABILIZER EL. 2'-0" [610] B.O.P. NOZZLE PROJ. = 10" [254]	6	60 CL. 150 RF UTILITY AIR EL. 4'-6" [1372] B.O.P. NOZZLE PROJ. = 10" [254]
3	324 CL. 150 RF PRODUCED GAS TO COMPRESSOR EL. 2'-0" [610] B.O.P. NOZZLE PROJ. = 10½" [267]	7	60 CL. 150 RF INSTRUMENT AIR EL. 4'-6" [1372] B.O.P. NOZZLE PROJ. = 10" [254]
4	273 CL. 150 RF H.P. FLARE TO HEADER EL. 13'-8 9/16" [4180] ℄ NOZZLE PROJ. = 10" [254]	8	60 CL. 300 RF UHM SUPPLY FROM HEADER EL. 2'-4" [711] B.O.P. NOZZLE PROJ. = 10" [254]
9	60 CL. 300 RF UHM RETURN TO HEADER EL. 2'-4" [711] B.O.P. NOZZLE PROJ. = 9¾" [248]	13	33 NPT DRIP LEG DRAIN EL. 1'-0" [305] ℄ NOZZLE PROJ. = 10" [254]
10	60 CL. 150 RF PURGE GAS EL. 2'-0" [610] B.O.P. NOZZLE PROJ. = 10" [254]		
11A/B	60 CL. 150 RF CONDENSATE CALIBRATION CONN. EL. 3'-0" [914] B.O.P. NOZZLE PROJ. = 10" [254]		
12	60 NPT FLOOR DRAIN EL. -6 1/4" [-159] ℄ NOZZLE PROJ. = 10" [254]		

NO.	REVISION	BY	CHK	DATE
2	AS BUILT	SF		04/06/14
1	RE-ISSUED FOR CONSTRUCTION	BS		16/09/13
0	ISSUED FOR CONSTRUCTION	BS		06/08/13
A	ISSUED FOR APPROVAL	RR		21/05/13

CUSTOMER REFERENCE #407014-00120

5Blue Process Equipment Inc.

www.5Blue.com

CUSTOMER: DEVON NEC CORPORATION

JOB NO. 5B1108-30

PROJECT: FERRIER CENTRAL OIL BATTERY – LIQUID EXTRACTION PLANT (LEP)
LOCATION: LSD 11-02-039-08 W5M

TITLE: COMPRESSED CARDIUM GAS SEPARATOR PACKAGE (002-PK-01-1600)
GENERAL ARRANGEMENT – PLAN VIEW

DRAWN	CHK	APP	SCALE	DATE	DWG NO	SHT TTL	
RR			1/2"=1'-0"	20/05/13	5B1108-02-DR-30-001	004	2

PROFESSIONAL ENGINEER ALBERTA
SHELLY ECKFORD
JUN 05 2014

NOTES:

1) ALL PRIMARY DIMENSIONS ARE IN IMPERIAL AND ALL SECONDARY DIMENSIONS ARE IN METRIC mm 0'-0" [000].
2) ALL ELEVATIONS ARE TAKEN FROM TOP OF CHECKER PLATE REFERENCE ELEVATION 0'-0" [000].
3) FOR PIPING SURFACE PREPARATION AND PAINT NOTES SEE INSTRUMENT LIST.
4) SHOP SUPPORT ALL PIPING AS REQUIRED.
5) ALL PIPING UNDER 2" NPS IS SHOWN FOR REFERENCE ONLY.
6) ESTIMATED SHIPPING PACKAGE MASS: 50 000 lbs (22 727 kg).

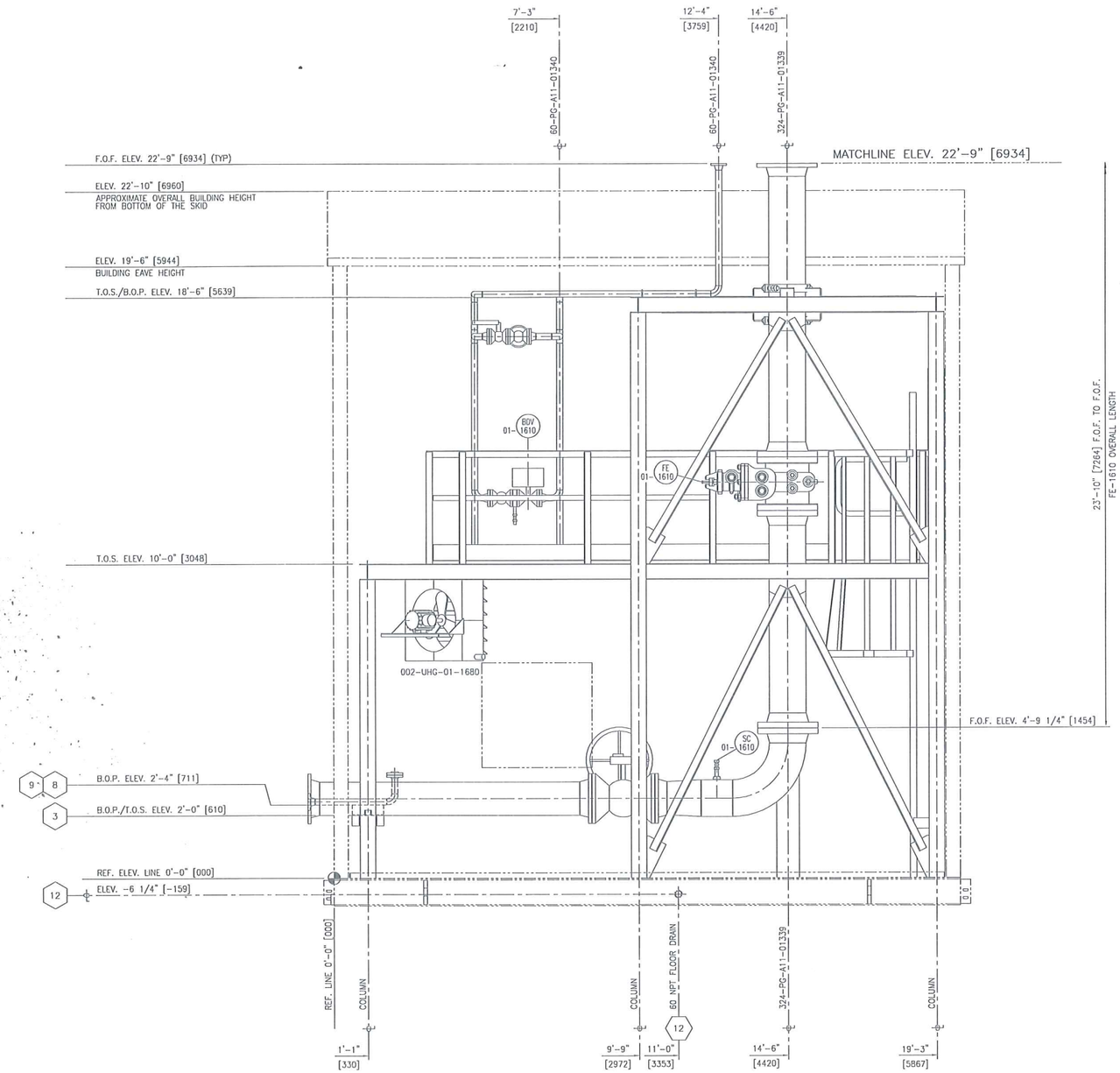

A 001 SECTION 'A-A' A 001
SCALE 1/2"=1'-0"
LOOKING WEST

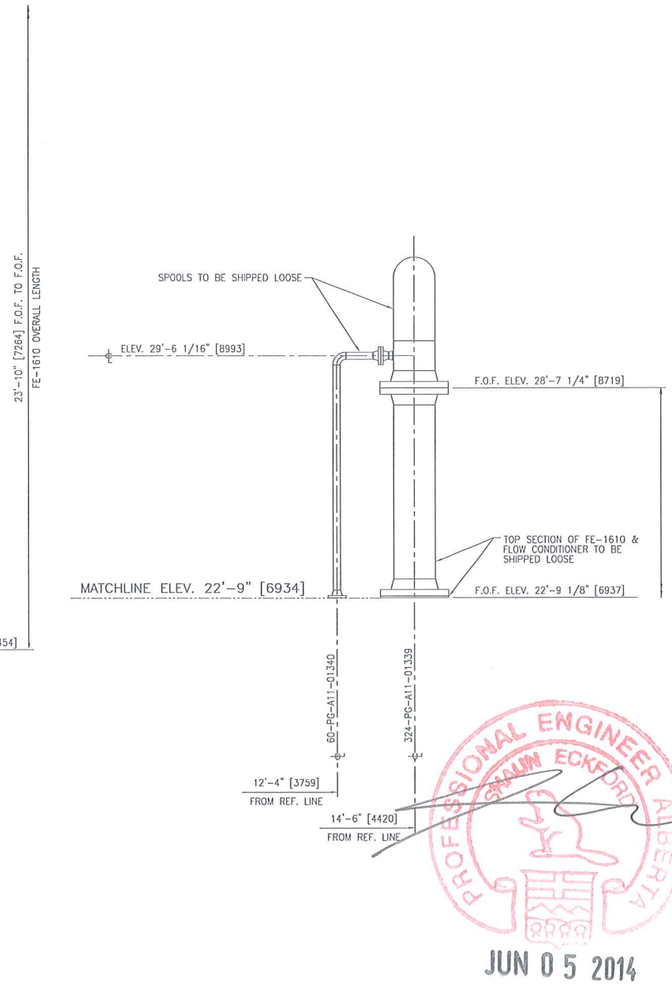

PROFESSIONAL ENGINEER ALBERTA SHAUN ECKFORD
JUN 05 2014

NOTES:

1) ALL PRIMARY DIMENSIONS ARE IN IMPERIAL AND ALL SECONDARY DIMENSIONS ARE IN METRIC mm 0'-0" [000].
2) ALL ELEVATIONS ARE TAKEN FROM TOP OF CHECKER PLATE REFERENCE ELEVATION 0'-0" [000].

TIE-IN SCHEDULE

1	324 CL. 150 RF FROM CARDIUM GAS INLET EL. 2'-0" [610] B.O.P. NOZZLE PROJ. = 10" [254]	5	60 CL. 150 RF CLOSED DRAIN TO HEADER EL. 9" [229] ℄ NOZZLE PROJ. = 10" [254]
2	60 CL. 150 RF CONDENSATE TO STABILIZER EL. 2'-0" [610] B.O.P. NOZZLE PROJ. = 10" [254]	6	60 CL. 150 RF UTILITY AIR EL. 4'-6" [1372] B.O.P. NOZZLE PROJ. = 10" [254]
3	324 CL. 150 RF PRODUCED GAS TO COMPRESSOR EL. 2'-0" [610] B.O.P. NOZZLE PROJ. = 10½" [267]	7	60 CL. 150 RF INSTRUMENT AIR EL. 4'-6" [1372] B.O.P. NOZZLE PROJ. = 10" [254]
4	273 CL. 150 RF H.P. FLARE TO HEADER EL. 13'-8 9/16" [4180] ℄ NOZZLE PROJ. = 10" [254]	8	60 CL. 300 RF UHM SUPPLY FROM HEADER EL. 2'-4" [711] B.O.P. NOZZLE PROJ. = 10" [254]
9	60 CL. 300 RF UHM RETURN TO HEADER EL. 2'-4" [711] B.O.P. NOZZLE PROJ. = 9¾" [248]	13	33 NPT DRIP LEG DRAIN EL. 1'-0" [305] ℄ NOZZLE PROJ. = 10" [254]
10	60 CL. 150 RF PURGE GAS EL. 2'-0" [610] B.O.P. NOZZLE PROJ. = 10" [254]		
11A/B	60 CL. 150 RF CONDENSATE CALIBRATION CONN. EL. 3'-0" [914] B.O.P. NOZZLE PROJ. = 10" [254]		
12	60 NPT FLOOR DRAIN EL. -6 1/4" [-159] ℄ NOZZLE PROJ. = 10" [254]		

NO.	REVISION	BY	CHK	DATE
2	AS BUILT	SF		04/06/14
1	RE-ISSUED FOR CONSTRUCTION	BS		16/09/13
0	ISSUED FOR CONSTRUCTION	BS		06/08/13
A	ISSUED FOR APPROVAL	RR		21/05/13

CUSTOMER REFERENCE #407014-00120

5Blue Process Equipment Inc.
www.5Blue.com

CUSTOMER: DEVON NEC CORPORATION
JOB NO. 5B1108-30

PROJECT:
FERRIER CENTRAL OIL BATTERY – LIQUID EXTRACTION PLANT (LEP)
LOCATION: LSD 11-02-039-08 W5M

TITLE:
COMPRESSED CARDIUM GAS SEPARATOR PACKAGE (002-PK-01-1600)
GENERAL ARRANGEMENT – SECTION VIEW 'A-A'

DRAWN	CHK	APP	SCALE	DATE	DWG NO	SHT TTL	
RR			1/2"=1'-0"	20/05/13	5B1108-02-DR-30-002	004	2

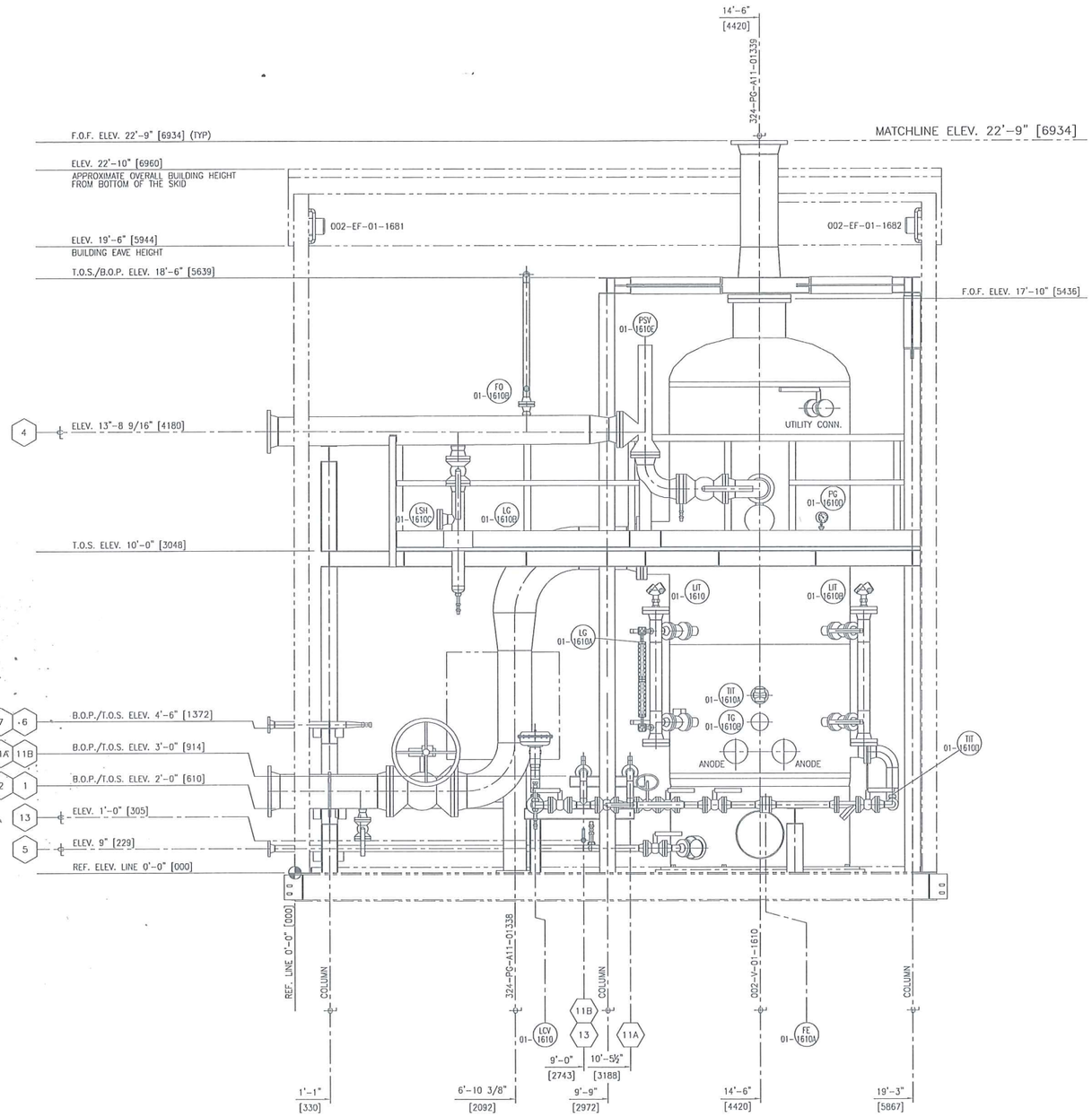

B 001 SECTION 'B-B' B 001
SCALE 1/2"=1'-0"
LOOKING WEST

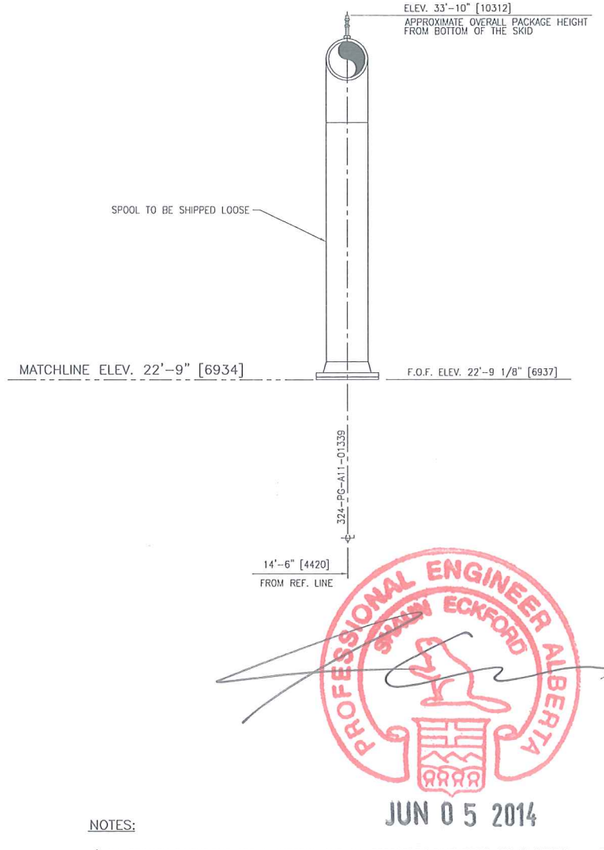

PROFESSIONAL ENGINEER ALBERTA
SIMON ECKFORD
JUN 05 2014

NOTES:

1) ALL PRIMARY DIMENSIONS ARE IN IMPERIAL AND ALL SECONDARY DIMENSIONS ARE IN METRIC mm 0'-0" [000].
2) ALL ELEVATIONS ARE TAKEN FROM TOP OF CHECKER PLATE REFERENCE ELEVATION 0'-0" [000].

TIE-IN SCHEDULE

1	324 CL. 150 RF FROM CARDIUM GAS INLET EL. 2'-0" [610] B.O.P. NOZZLE PROJ. = 10" [254]	5	60 CL. 150 RF CLOSED DRAIN TO HEADER EL. 9" [229] ℄ NOZZLE PROJ. = 10" [254]
2	60 CL. 150 RF CONDENSATE TO STABILIZER EL. 2'-0" [610] B.O.P. NOZZLE PROJ. = 10" [254]	6	60 CL. 150 RF UTILITY AIR EL. 4'-6" [1372] B.O.P. NOZZLE PROJ. = 10" [254]
3	324 CL. 150 RF PRODUCED GAS TO COMPRESSOR EL. 2'-0" [610] B.O.P. NOZZLE PROJ. = 10½" [267]	7	60 CL. 150 RF INSTRUMENT AIR EL. 4'-6" [1372] B.O.P. NOZZLE PROJ. = 10" [254]
4	273 CL. 150 RF H.P. FLARE TO HEADER EL. 13'-8 9/16" [4180] ℄ NOZZLE PROJ. = 10" [254]	8	60 CL. 300 RF UHM SUPPLY FROM HEADER EL. 2'-4" [711] B.O.P. NOZZLE PROJ. = 10" [254]
9	60 CL. 300 RF UHM RETURN TO HEADER EL. 2'-4" [711] B.O.P. NOZZLE PROJ. = 9¾" [248]	13	33 NPT DRIP LEG DRAIN EL. 1'-0" [305] ℄ NOZZLE PROJ. = 10" [254]
10	60 CL. 150 RF PURGE GAS EL. 2'-0" [610] B.O.P. NOZZLE PROJ. = 10" [254]		
11A/B	60 CL. 150 RF CONDENSATE CALIBRATION CONN. EL. 3'-0" [914] B.O.P. NOZZLE PROJ. = 10" [254]		
12	60 NPT FLOOR DRAIN EL. -6 1/4" [-159] ℄ NOZZLE PROJ. = 10" [254]		

NO.	REVISION	BY	CHK	DATE
2	AS BUILT	SF		04/06/14
1	RE-ISSUED FOR CONSTRUCTION	BS		16/09/13
0	ISSUED FOR CONSTRUCTION	BS		06/08/13
A	ISSUED FOR APPROVAL	RR		21/05/13

CUSTOMER REFERENCE #407014-00120

5Blue Process Equipment Inc.
www.5Blue.com

CUSTOMER: DEVON NEC CORPORATION
JOB NO. 5B1108-30

PROJECT:
FERRIER CENTRAL OIL BATTERY – LIQUID EXTRACTION PLANT (LEP)
LOCATION: LSD 11-02-039-08 W5M

TITLE:
COMPRESSED CARDIUM GAS SEPARATOR PACKAGE (002-PK-01-1600)
GENERAL ARRANGEMENT – SECTION VIEW 'B-B'

DRAWN	CHK	APP	SCALE	DATE	DWG NO	SHT TTL	2
RR			1/2"=1'-0"	20/05/13	5B1108-02-DR-30-003	004	

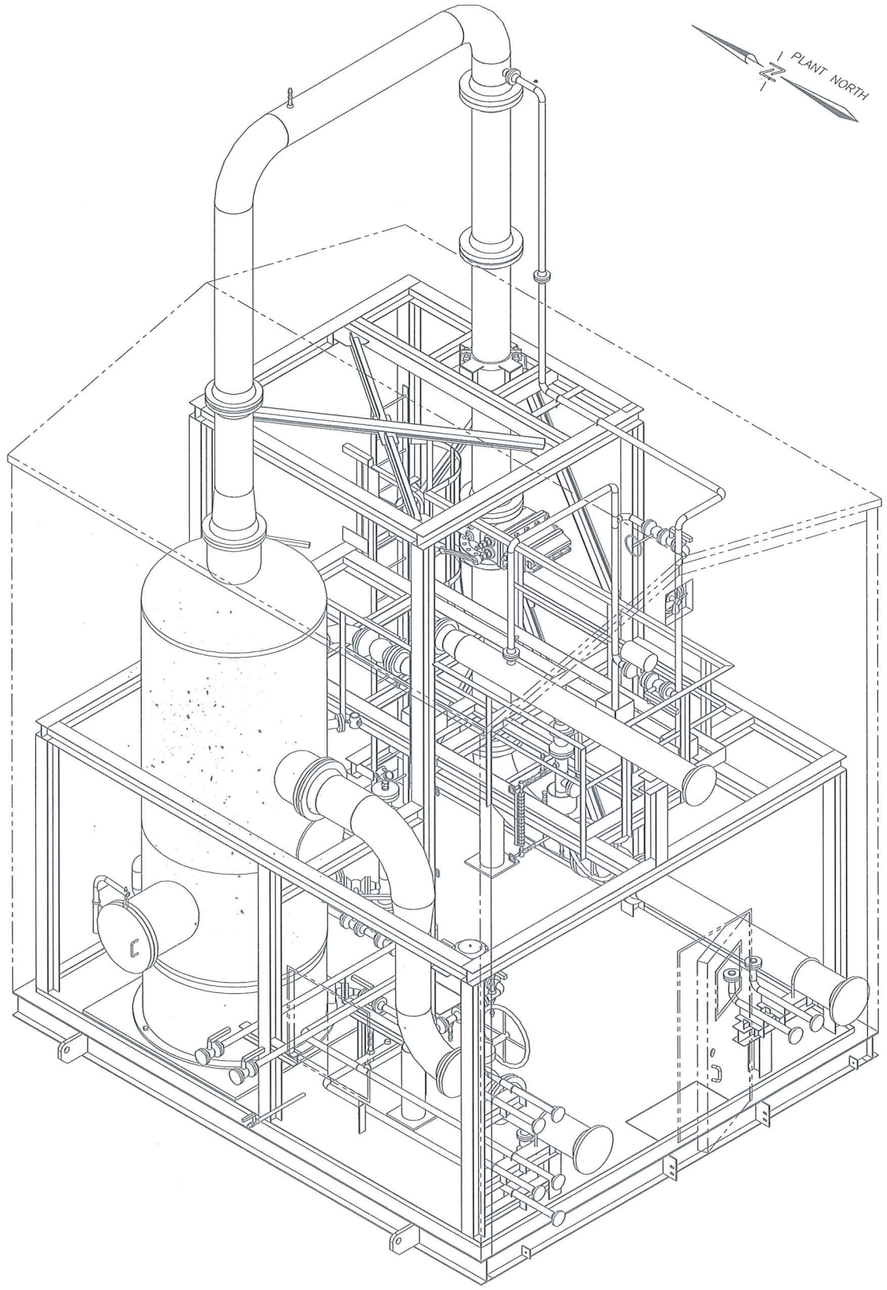

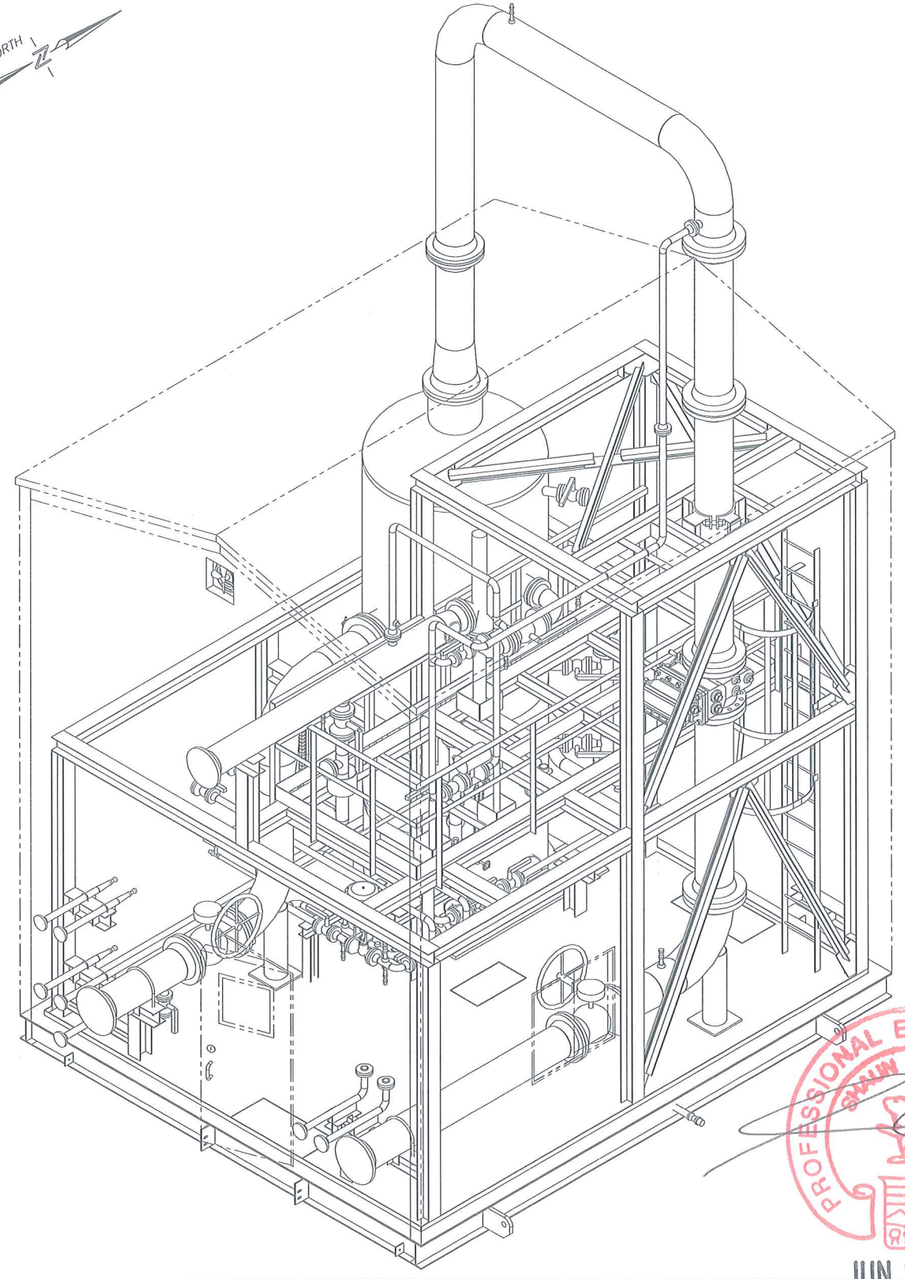

NO.	REVISION	BY	CHK	DATE
2	AS BUILT	SF		04/06/14
1	GENERAL REVISION	BS		16/09/13
0	ISSUED FOR CONSTRUCTION	BS		06/08/13
A	ISSUED FOR APPROVAL	RR		21/05/13

CUSTOMER REFERENCE: #407014-00120

5Blue
Process Equipment Inc.
www.5Blue.com

CUSTOMER: DEVON NEC CORPORATION

JOB NO. 5B1108-30

PROJECT:
FERRIER CENTRAL OIL BATTERY – LIQUID EXTRACTION PLANT (LEP)
LOCATION: LSD 11-02-039-08 W5M

TITLE:
COMPRESSED CARDIUM GAS SEPARATOR PACKAGE (002-PK-01-1600)
GENERAL ARRANGEMENT – ISOMETRIC VIEWS

DRAWN	CHK	APP	SCALE	DATE	DWG NO	SHT TTL	2
RR			N.T.S.	20/05/13	5B1108-02-DR-30-004	004	

PROFESSIONAL ENGINEER ALBERTA
SHAUN ECKFORD

JUN 05 2014

5Blue
Process Equipment Inc.

A3 List of Connections by Buyer including Detailed Location (Piping, Seal Flush, Testing, Electrical, Instrumentation, etc.)

2303-8th Street, Nisku Alberta, T9E-7Z3 CANADA

This section does not apply

5Blue
Process Equipment Inc.

A4 Plans, Sections, Detailed Drawings with Bills of Materials

2303-8th Street, Nisku Alberta, T9E-7Z3 CANADA

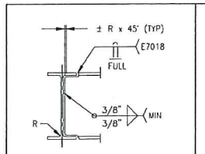

COPING DETAIL
MAIN MEMBERS

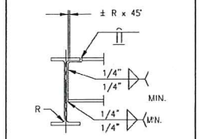

COPING DETAIL
BEAM TO BEAM

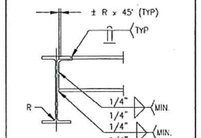

COPING DETAIL
CHANNEL TO BEAM

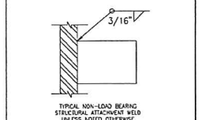

TYPICAL WELD DETAIL

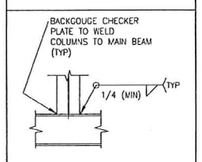

WELDING DETAIL
COLUMN TO BEAM

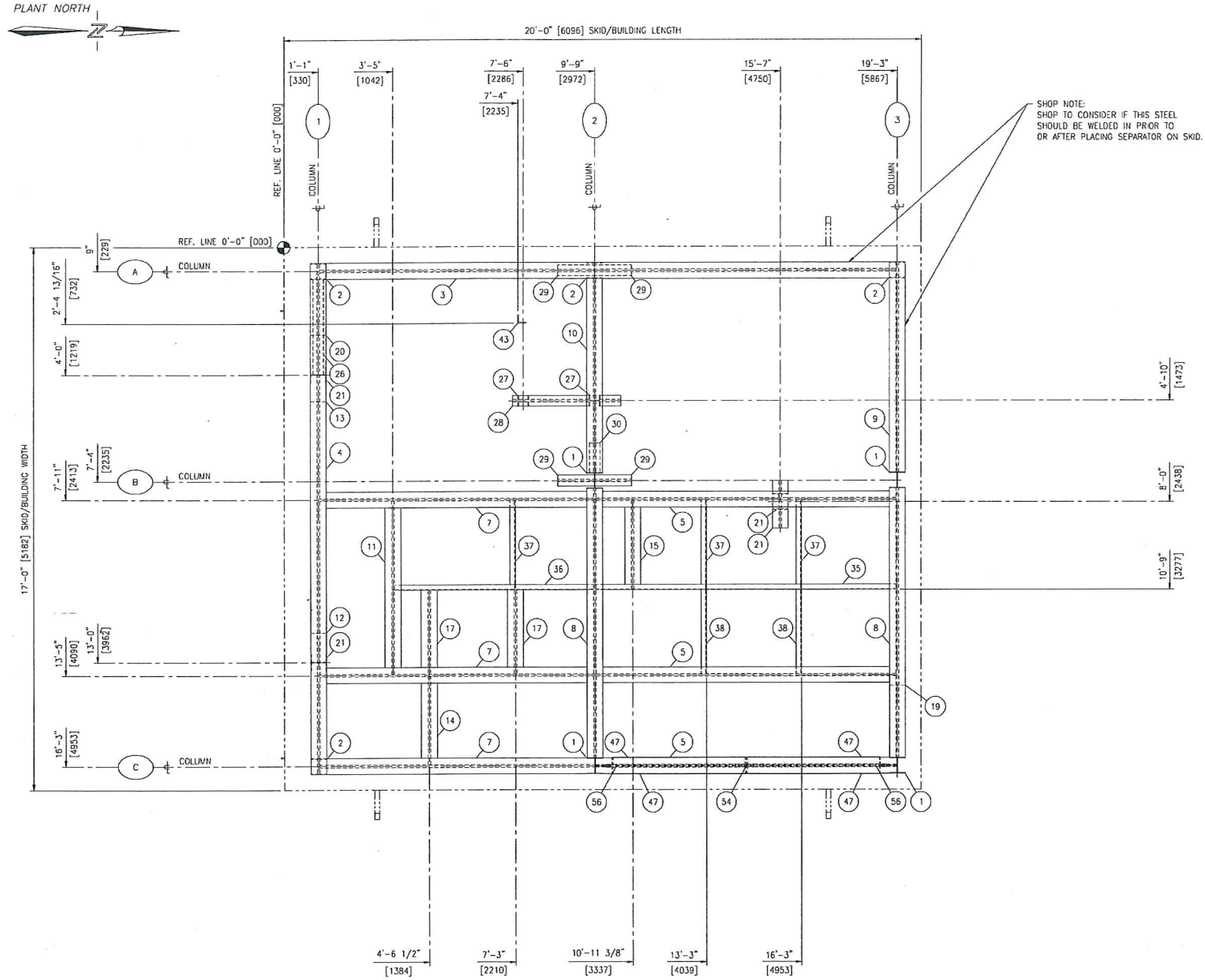

PLAN VIEW – FLOOR TO 10'-0" T.O.S.
SCALE: 1/2"=1'-0"

BILL OF MATERIAL

MARK	DESCRIPTION	LONG ANNOTATION	LENGTH	QTY	MATERIAL
1	COLUMN	W6 @ 15#	18'-0"	4	SA/CSA-G40.21-50W
2	COLUMN	W6 @ 15#	9'-6"	4	SA/CSA-G40.21-50W
3	SUPPORT	W6 @ 15#	18'-1 3/4"	1	SA/CSA-G40.21-50W
4	SUPPORT	W6 @ 15#	16'-0"	1	SA/CSA-G40.21-50W
5	SUPPORT	W6 @ 15#	8'-5 3/4"	6	SA/CSA-G40.21-50W
6	SUPPORT	W6 @ 15#	9'-5"	2	SA/CSA-G40.21-50W
7	SUPPORT	W6 @ 15#	8'-7 3/4"	3	SA/CSA-G40.21-50W
8	SUPPORT	W6 @ 15#	8'-5"	2	SA/CSA-G40.21-50W
9	SUPPORT	W6 @ 15#	6'-7	1	SA/CSA-G40.21-50W
10	SUPPORT	W6 @ 15#	6'-1"	1	SA/CSA-G40.21-50W
11	SUPPORT	W6 @ 15#	5'-5 3/4"	1	SA/CSA-G40.21-50W
12	SUPPORT	W6 @ 15#	3'-11"	1	SA/CSA-G40.21-50W
13	SUPPORT	W6 @ 15#	3'-10"	1	SA/CSA-G40.21-50W
14	SUPPORT	W6 @ 15#	2'-9 3/4"	1	SA/CSA-G40.21-50W
15	SUPPORT	W6 @ 15#	2'-9 3/8"	1	SA/CSA-G40.21-50W
16	SUPPORT	W6 @ 15#	2'-9 1/4"	1	SA/CSA-G40.21-50W
17	SUPPORT	W6 @ 15#	2'-7 7/8"	2	SA/CSA-G40.21-50W
18	SUPPORT	W6 @ 15#	2'-4"	2	SA/CSA-G40.21-50W
19	SUPPORT	W6 @ 15#	2'-3"	1	SA/CSA-G40.21-50W
20	SUPPORT	W6 @ 15#	1'-9"	1	SA/CSA-G40.21-50W
21	SUPPORT	W6 @ 15#	1'-6"	4	SA/CSA-G40.21-50W
22	SUPPORT	W6 @ 15#	1'-0"	1	SA/CSA-G40.21-50W
26	SUPPORT	W4 @ 13#	2'-11 7/8"	1	SA/CSA-G40.21-50W
27	SUPPORT	W4 @ 13#	1'-8 1/8"	2	SA/CSA-G40.21-50W
28	SUPPORT	W4 @ 13#	3'-5"	1	SA/CSA-G40.21-50W
29	SUPPORT	W4 @ 13#	1'-1 7/8"	4	SA/CSA-G40.21-50W
30	SUPPORT	W4 @ 13#	11"	1	SA/CSA-G40.21-50W
35	SUPPORT	C6 @ 10.5#	9'-5 3/4"	1	SA/CSA-G40.21-44W
36	SUPPORT	C6 @ 10.5#	6'-3 3/4"	1	SA/CSA-G40.21-44W
37	SUPPORT	C6 @ 10.5#	2'-9 3/8"	3	SA/CSA-G40.21-44W
38	SUPPORT	C6 @ 10.5#	2'-7 7/8"	2	SA/CSA-G40.21-44W
40	SUPPORT PLATE	5 7/16" x 7/8" PL x 1'-0" LG		1	SA/CSA-G40.21-44W
42	SUPPORT	3" x 3" x 3/8" ANGLE	2'-4"	1	SA/CSA-G40.21-44W
43	SUPPORT	3" x 3" x 3/8" ANGLE	1'-0"	1	SA/CSA-G40.21-44W
45	BRACING	3" x 3" x 3/8" ANGLE	11'-0 3/8"	2	SA/CSA-G40.21-44W
46	BRACING	3" x 3" x 3/8" ANGLE	9'-8 15/16"	2	SA/CSA-G40.21-44W
47	BRACING	3" x 3" x 3/8" ANGLE	9'-4 1/4"	4	SA/CSA-G40.21-44W
48	BRACING	3" x 3" x 3/8" ANGLE	8'-2 1/2"	4	SA/CSA-G40.21-44W
49	BRACING	3" x 3" x 3/8" ANGLE	4'-5 7/16"	4	SA/CSA-G40.21-44W
53	FISH PLATE	6" x 3/8" PL x 1'-6" LG		1	SA/CSA-G40.21-44W
54	BRACING PLATE	7" x 3/8" PL x 1'-2" LG (SEE DETAIL)		1	SA/CSA-G40.21-44W
55	BRACING PLATE	7 1/4" x 3/8" PL x 1'-2" LG (SEE DETAIL)		1	SA/CSA-G40.21-44W
56	BRACING PLATE	10 1/4" x 3/8" PL x 1'-4" LG (SEE DETAIL)		2	SA/CSA-G40.21-44W
57	BRACING PLATE	10 1/8" x 3/8" PL x 1'-2" LG (SEE DETAIL)		2	SA/CSA-G40.21-44W
58	BRACING PLATE	10 9/16" x 3/8" PL x 1'-1 1/2" LG (SEE DETAIL)		2	SA/CSA-G40.21-44W
59	BRACING PLATE	8" x 3/8" PL x 8 1/4" LG (SEE DETAIL)		2	SA/CSA-G40.21-44W
60	BRACING PLATE	7 11/16" x 3/8" PL x 1'-1 1/2" LG (SEE DETAIL)		2	SA/CSA-G40.21-44W
61	BRACING PLATE	2 13/16" x 3/8" PL x 5 3/8" LG (SEE DETAIL)		10	SA/CSA-G40.21-44W

PROFESSIONAL ENGINEER ALBERTA
TREVOR W. FREEMAN

June 19/14

NOTES

1) ALL PRIMARY DIMENSIONS ARE IN INCHES AND ALL SECONDARY DEMENSIONS ARE IN MILLIMETERS 0'-0" [000].
2) TOP OF CHECKER PLATE REFERENCE ELEVATION 0'-0" [000].
3) ALL FABRICATION SHALL BE CARRIED OUT IN CWB APPROVED FABRICATION SHOPS AND MUST CONFORM TO CURRENT 2003 CSA W47 AND W59. ALL WELD MATERIAL SHALL BE CSA STD W48 SERIES APPROVED. FOR QUALITY OF WELD, REFER TO COMPANY CWB WELDING CERTIFICATION UNDER NUMBER 150-2/SUBCONTRACTOR.
4) FOR SANDBLASTING NOTES SEE E&IL 5B1108-02-EL-00-001
5) FOR PAINT NOTES SEE E&IL 5B1108-02-EL-00-001
6) MATERIAL SUBSTITUTIONS TO LOAD BEARING STRUCTURAL COMPONENTS SHALL BE SUBJECT TO ENGINEERING APPROVAL.
7) TOTAL APPROXIMATE OVERHEAD STRUCTURAL STEEL MASS: 7150 lbs (3250 kg).
8) REFER TO DWG# 5B1108-02-DR-11-002 FOR PLAN VIEW – 10'-0" T.O.S. & ABOVE.
9) REFER TO DWG# 5B1108-02-DR-11-003-005 FOR ELEVATION VIEWS.
10) REFER TO DWG# 5B1108-02-DR-11-006 FOR FOR BRACINGS AND PLATES DETAILS
11) REFER TO DWG# 5B1108-02-DR-11-007 & 008 FOR PLATFORM & LADDER DETAILS
12) REFER TO DWG# 5B1108-02-DR-11-009 FOR ISO VIEWS.

NO	REVISION	BY	CHK	DATE
1	AS BUILT	TBB		06/05/14
0	ISSUED FOR CONSTRUCTION	BS		11/09/13
A	ISSUED FOR APPROVAL	BS		28/08/13

CUSTOMER REFERENCE: #407014-00120

5Blue Process Equipment Inc.
www.5Blue.com

CUSTOMER: DEVON NEC CORPORATION
JOB NO: 5B1108-11

PROJECT: FERRIER CENTRAL OIL BATTERY – LIQUID EXTRACTION PLANT (LEP)
LOCATION: LSD 11-02-039-08 W5M

TITLE: COMPRESSED CARDIUM GAS SEPARATOR PACKAGE (002-PK-01-1600)
OVERHEAD STRUCTURE – PLAN VIEW – FLOOR TO 10'-0" T.O.S.

DRAWN	DES	APD	SCALE	DATE	DWG NO	SHT TTL	
BS			1/2"=1'-0"	20/08/13	5B1108-02-DR-11-001	009	1

PLANT NORTH

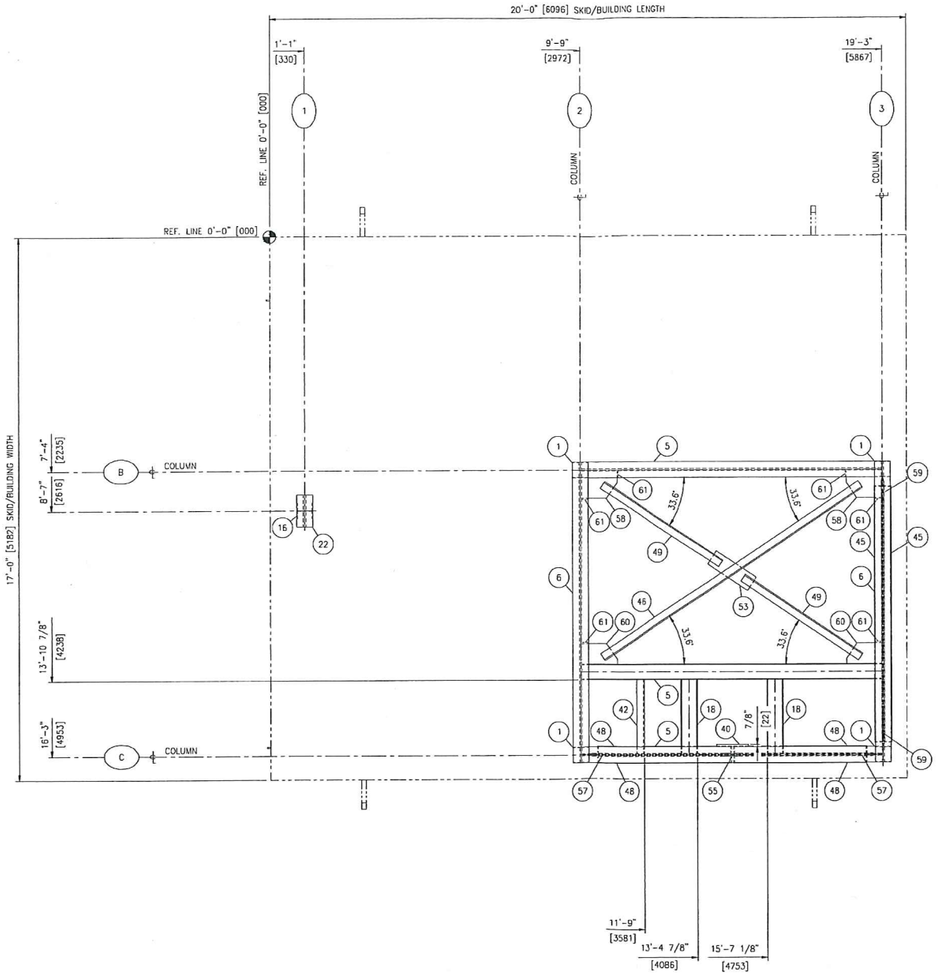

PLAN VIEW – 10'-0" T.O.S. & ABOVE
SCALE 1/2"=1'-0"

NOTES

1) ALL PRIMARY DIMENSIONS ARE IN INCHES AND ALL SECONDARY DEMENSIONS ARE IN MILLIMETERS 0'-0" [000]
2) TOP OF CHECKER PLATE REFERENCE ELEVATION 0'-0" [000].
3) REFER TO DWG# 5B1108-02-DR-11-001 FOR PLAN VIEW – FLOOR TO 10'-0" T.O.S., BILL OF MATERIAL & WELD DETAILS.
4) REFER TO DWG# 5B1108-02-DR-11-003~005 FOR ELEVATION VIEWS.
5) REFER TO DWG# 5B1108-02-DR-11-006 FOR FOR BRACINGS AND PLATES DETAILS
6) REFER TO DWG# 5B1108-02-DR-11-007 & 008 FOR PLATFORM & LADDER DETAILS.
7) REFER TO DWG# 5B1108-02-DR-11-009 FOR ISO VIEWS.

NO.	REVISION	BY	CHK	DATE
1	AS BUILT	TBB		06/05/14
0	ISSUED FOR CONSTRUCTION	BS		11/09/13
A	ISSUED FOR APPROVAL	BS		28/08/13

PROFESSIONAL ENGINEER ALBERTA TREVOR W. FREEMAN
June 19/14

CUSTOMER REFERENCE: #407014-00120

5Blue Process Equipment Inc.
www.5Blue.com

CUSTOMER: DEVON NEC CORPORATION
JOB NO: 5B1108-11
PROJECT: FERRIER CENTRAL OIL BATTERY – LIQUID EXTRACTION PLANT (LEP)
LOCATION: LSD 11-02-039-08 W5M
TITLE: COMPRESSED CARDIUM GAS SEPARATOR PACKAGE (002-PK-01-1600)
OVERHEAD STRUCTURE – PLAN VIEW – 10'-0" T.O.S. & ABOVE

DRAWN	APP'D	SCALE	DATE	DWG NO	SHT TTL	
BS		1/2"=1'-0"	20/08/13	5B1108-02-DR-11-002	009	1

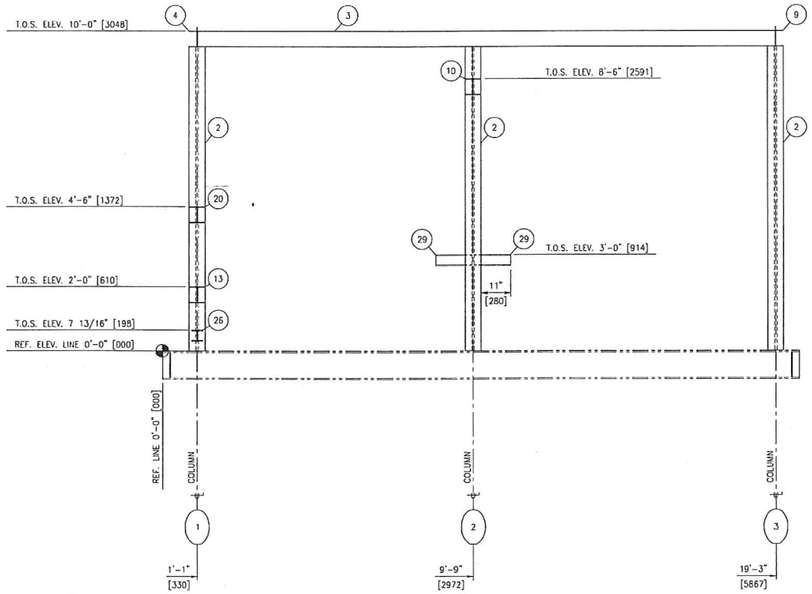

ELEVATION AT GRID LINE A
SCALE 1/2"=1'-0"
LOOKING WEST

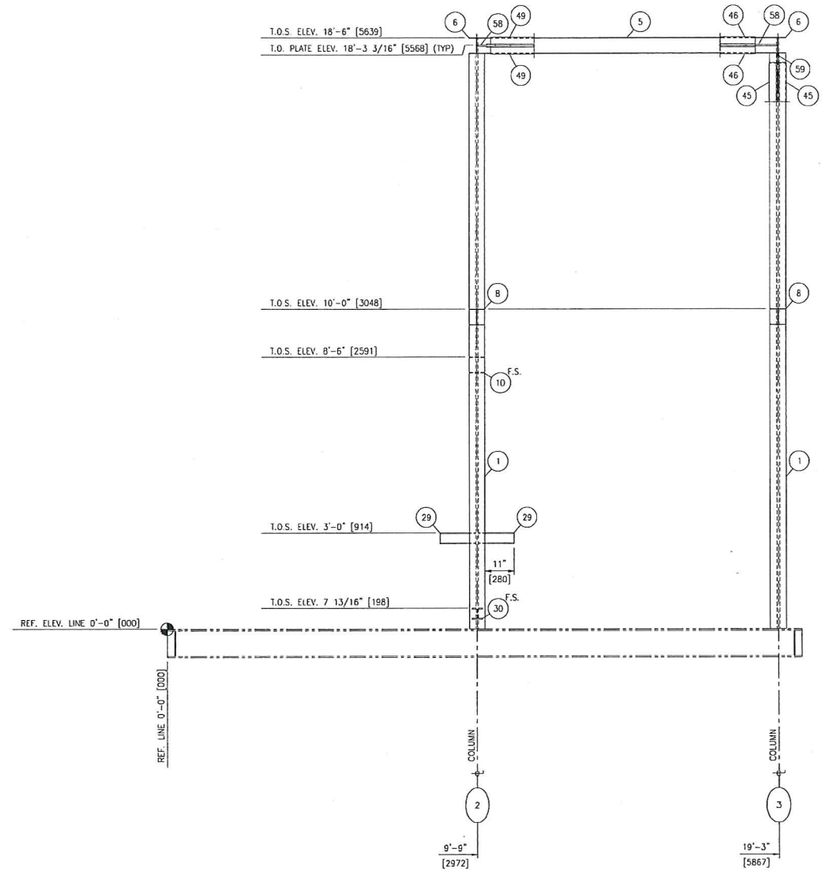

ELEVATION AT GRID LINE B
SCALE 1/2"=1'-0"
LOOKING WEST

NOTES

1) ALL PRIMARY DIMENSIONS ARE IN INCHES AND ALL SECONDARY DEMENSIONS ARE IN MILLIMETERS 0'-0" [000]
2) TOP OF CHECKER PLATE REFERENCE ELEVATION 0'-0" [000].
3) REFER TO DWG# 5B1108-02-DR-11-001 FOR PLAN VIEW - FLOOR TO 10'-0" T.O.S., BILL OF MATERIAL & WELD DETAILS
4) REFER TO DWG# 5B1108-02-DR-11-002 FOR PLAN VIEW - 10'-0" T.O.S. & ABOVE
5) REFER TO DWG# 5B1108-02-DR-11-004 & 005 FOR ELEVATION VIEWS.
6) REFER TO DWG# 5B1108-02-DR-11-006 FOR FOR BRACINGS AND PLATES DETAILS
7) REFER TO DWG# 5B1108-02-DR-11-007 & 008 FOR PLATFORM & LADDER DETAILS.
8) REFER TO DWG# 5B1108-02-DR-11-009 FOR ISO VIEWS.

NO.	REVISION	BY	CHK	DATE
1	AS BUILT	TBB		06/05/14
0	ISSUED FOR CONSTRUCTION	BS		11/09/13
A	ISSUED FOR APPROVAL	BS		28/08/13

CUSTOMER REFERENCE: #407014-00120

5Blue Process Equipment Inc.
www.5Blue.com

CUSTOMER: DEVON NEC CORPORATION
JOB NO.: 5B1108-11

PROJECT: FERRIER CENTRAL OIL BATTERY - LIQUID EXTRACTION PLANT (LEP)
LOCATION: LSD 11-02-039-08 W5M

TITLE: COMPRESSED CARDIUM GAS SEPARATOR PACKAGE (002-PK-01-1600)
OVERHEAD STRUCTURE - ELEVATION VIEWS

DRAWN	CHK	APP	SCALE	DATE	DWG NO	SHT TTL	REV
BS			1/2"=1'-0"	20/08/13	5B1108-02-DR-11-003	009	1

PROFESSIONAL ENGINEER ALBERTA
TREVOR W. FREEMAN
P. Eng.

June 19/14

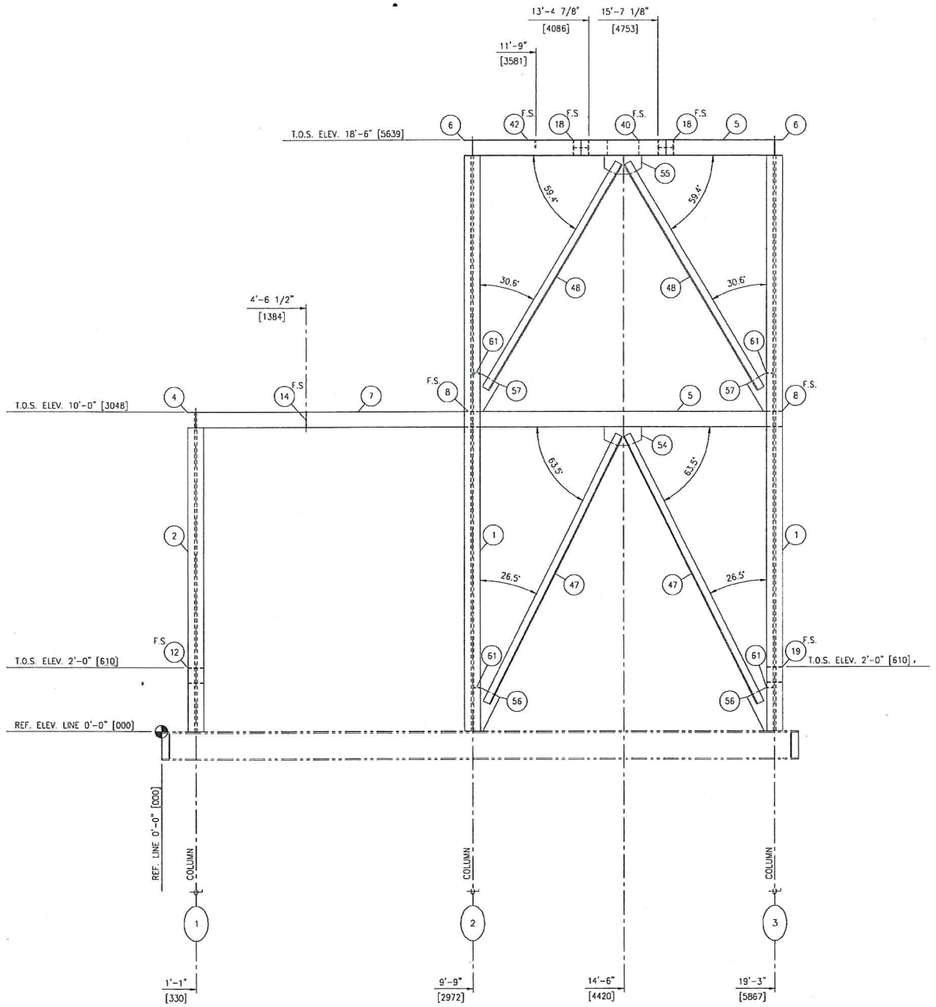

ELEVATION AT GRID LINE C
SCALE 1/2"=1'-0"
LOOKING WEST

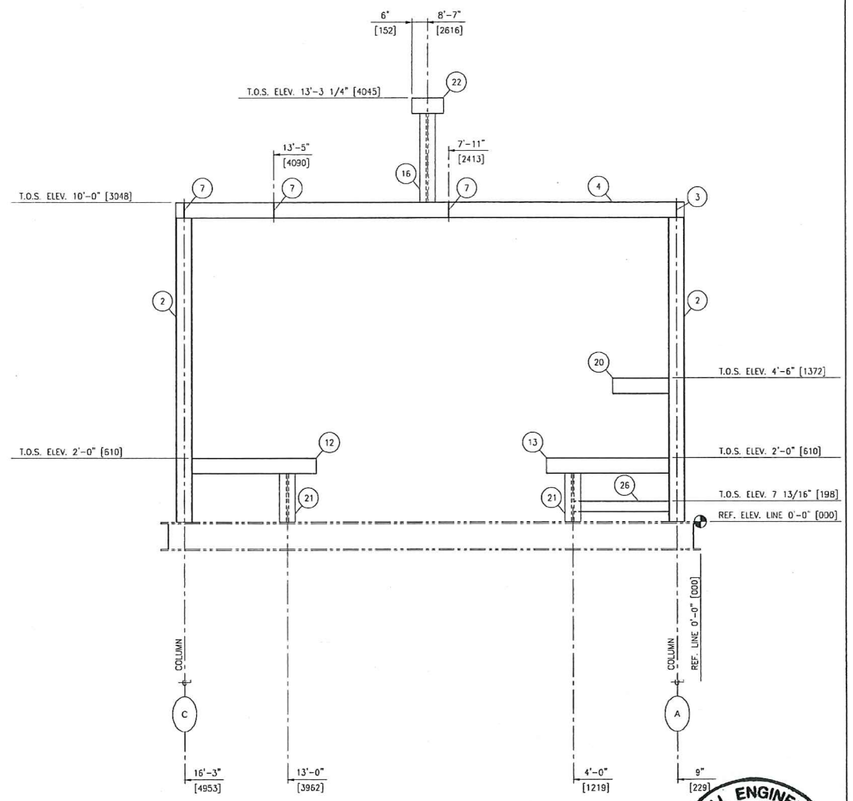

ELEVATION AT GRID LINE 1
SCALE 1/2"=1'-0"
LOOKING SOUTH

PROFESSIONAL ENGINEER ALBERTA
TREVOR W. FREEMAN

June 19/14

NOTES

1) ALL PRIMARY DIMENSIONS ARE IN INCHES AND ALL SECONDARY DEMENSIONS ARE IN MILLIMETERS 0'-0" [000].
2) TOP OF CHECKER PLATE REFERENCE ELEVATION 0'-0" [000].
3) REFER TO DWG# 5B1108-02-DR-11-001 FOR PLAN VIEW - FLOOR TO 10'-0" T.O.S., BILL OF MATERIAL & WELD DETAILS.
4) REFER TO DWG# 5B1108-02-DR-11-002 FOR PLAN VIEW - 10'-0" T.O.S. & ABOVE.
5) REFER TO DWG# 5B1108-02-DR-11-003 & 005 FOR ELEVATION VIEWS.
6) REFER TO DWG# 5B1108-02-DR-11-006 FOR FOR BRACINGS AND PLATES DETAILS
7) REFER TO DWG# 5B1108-02-DR-11-007 & 008 FOR PLATFORM & LADDER DETAILS.
8) REFER TO DWG# 5B1108-02-DR-11-009 FOR ISO VIEWS.

NO.	REVISION	BY	CHK	DATE
1	AS BUILT	TBB		05/05/14
0	ISSUED FOR CONSTRUCTION	BS		11/09/13
A	ISSUED FOR APPROVAL	BS		28/08/13

CUSTOMER REFERENCE: #407014-00120

5Blue Process Equipment Inc.
www.5Blue.com

CUSTOMER: DEVON NEC CORPORATION
JOB NO.: 5B1108-11

PROJECT:
FERRIER CENTRAL OIL BATTERY - LIQUID EXTRACTION PLANT (LEP)
LOCATION: LSD 11-02-039-08 W5M

TITLE:
COMPRESSED CARDIUM GAS SEPARATOR PACKAGE (002-PK-01-1600)
OVERHEAD STRUCTURE - ELEVATION VIEWS

DRAWN	CHK	APP	SCALE	DATE	DWG NO	SHT TTL	
BS			1/2"=1'-0"	20/08/13	5B1108-02-DR-11-004	009	1

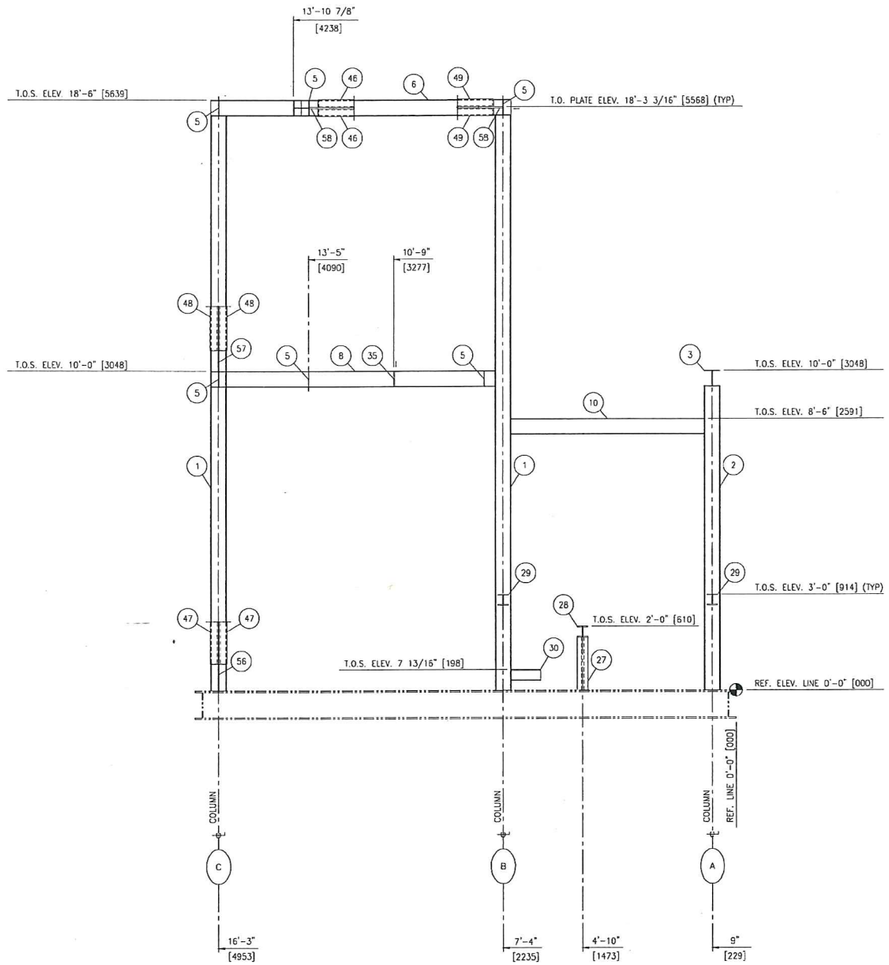

ELEVATION AT GRID LINE 2
SCALE 1/2"=1'-0"
LOOKING SOUTH

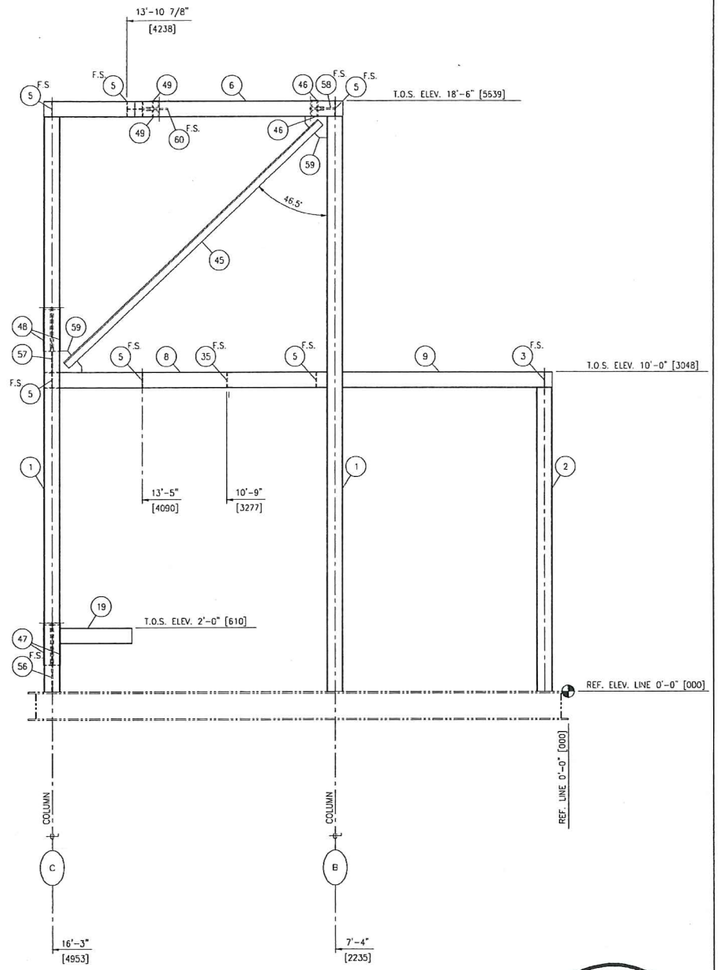

ELEVATION AT GRID LINE 3
SCALE 1/2"=1'-0"
LOOKING SOUTH

PROFESSIONAL ENGINEER ALBERTA
TREVOR W. FREEMAN

June 19/14

NOTES

1) ALL PRIMARY DIMENSIONS ARE IN INCHES AND ALL SECONDARY DEMENSIONS ARE IN MILLIMETERS 0'-0" [000].
2) TOP OF CHECKER PLATE REFERENCE ELEVATION 0'-0" [000].
3) REFER TO DWG# 5B1108-02-DR-11-001 FOR PLAN VIEW - FLOOR TO 10'-0" T.O.S., BILL OF MATERIAL & WELD DETAILS.
4) REFER TO DWG# 5B1108-02-DR-11-002 FOR PLAN VIEW - 10'-0" T.O.S. & ABOVE.
5) REFER TO DWG# 5B1108-02-DR-11-003 & 004 FOR ELEVATION VIEWS.
6) REFER TO DWG# 5B1108-02-DR-11-006 FOR FOR BRACINGS AND PLATES DETAILS
7) REFER TO DWG# 5B1108-02-DR-11-007 & 008 FOR PLATFORM & LADDER DETAILS.
8) REFER TO DWG# 5B1108-02-DR-11-009 FOR ISO VIEWS.

NO.	REVISION	BY	CHK	DATE
1	AS BUILT	TBB		06/05/14
0	ISSUED FOR CONSTRUCTION	BS		11/09/13
A	ISSUED FOR APPROVAL	BS		28/08/13

CUSTOMER REFERENCE: #407014-00120

5Blue Process Equipment Inc.
www.5Blue.com

CUSTOMER: DEVON NEC CORPORATION
JOB NO. 5B1108-11

PROJECT: FERRIER CENTRAL OIL BATTERY - LIQUID EXTRACTION PLANT (LEP)
LOCATION: LSD 11-02-039-08 W5M

TITLE: COMPRESSED CARDIUM GAS SEPARATOR PACKAGE (002-PK-01-1600)
OVERHEAD STRUCTURE - ELEVATION VIEWS

DRAWN	CHK	APP	SCALE	DATE	DWG NO	SHT TTL	
BS			1/2"=1'-0"	20/08/13	5B1108-02-DR-11-005	009	1

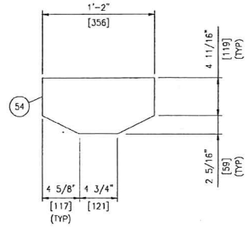

ITEM #54 DETAIL
SCALE 1 1/2"=1'-0"
(1) SHOWN (1) REQUIRED

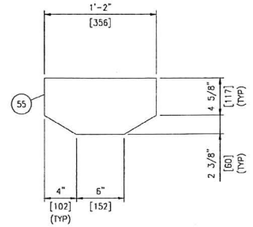

ITEM #55 DETAIL
SCALE 1 1/2"=1'-0"
(1) SHOWN (1) REQUIRED

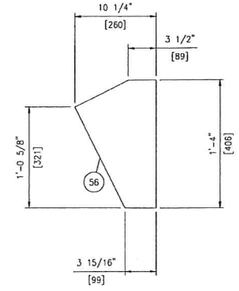

ITEM #56 DETAIL
SCALE 1 1/2"=1'-0"
(1) SHOWN (2) REQUIRED

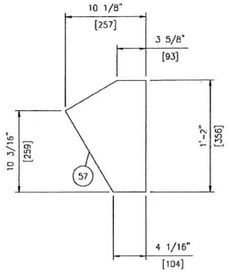

ITEM #57 DETAIL
SCALE 1 1/2"=1'-0"
(1) SHOWN (2) REQUIRED

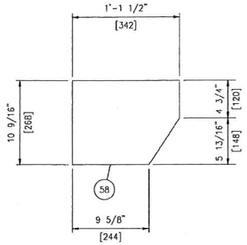

ITEM #58 DETAIL
SCALE 1 1/2"=1'-0"
(1) SHOWN (2) REQUIRED

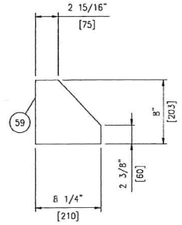

ITEM #59 DETAIL
SCALE 1 1/2"=1'-0"
(1) SHOWN (2) REQUIRED

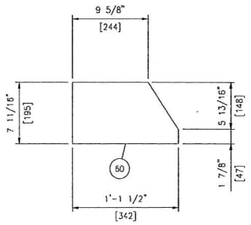

ITEM #60 DETAIL
SCALE 1 1/2"=1'-0"
(1) SHOWN (2) REQUIRED

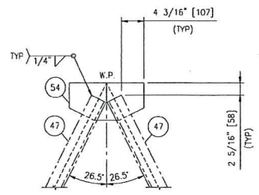

ELEVATION VIEW OF ITEM #54
SCALE 1"=1'-0"
LOOKING WEST

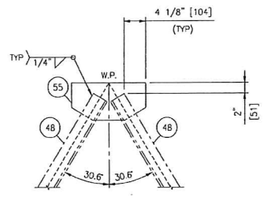

ELEVATION VIEW OF ITEM #55
SCALE 1"=1'-0"
LOOKING WEST

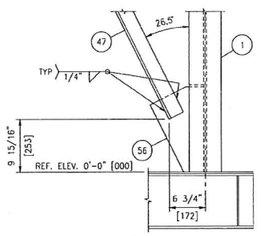

ELEVATION VIEW OF ITEM #56
SCALE 1"=1'-0"
LOOKING WEST

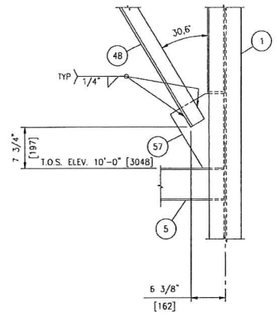

ELEVATION VIEW OF ITEM #57
SCALE 1"=1'-0"
LOOKING WEST

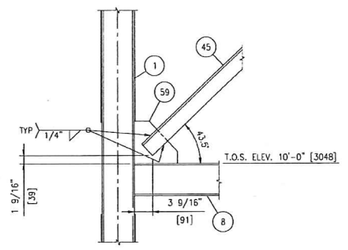

ELEVATION VIEW OF ITEM #59
SCALE 1"=1'-0"
LOOKING SOUTH

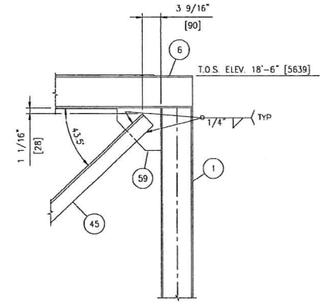

ELEVATION VIEW OF ITEM #59
SCALE 1"=1'-0"
LOOKING SOUTH

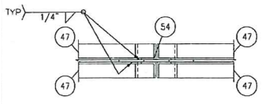

PLAN VIEW OF ITEM #54
SCALE 1"=1'-0"

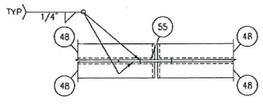

PLAN VIEW OF ITEM #55
SCALE 1"=1'-0"

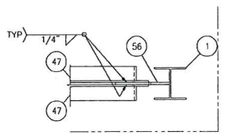

PLAN VIEW OF ITEM #56
SCALE 1"=1'-0"

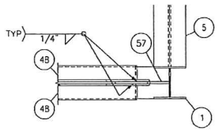

PLAN VIEW OF ITEM #57
SCALE 1"=1'-0"

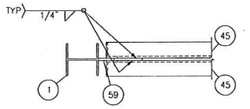

PLAN VIEW OF ITEM #59
SCALE 1"=1'-0"

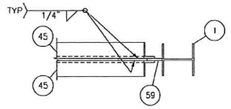

PLAN VIEW OF ITEM #59
SCALE 1"=1'-0"

NOTES

1) ALL PRIMARY DIMENSIONS ARE IN INCHES AND ALL SECONDARY DEMENSIONS ARE IN MILLIMETERS 0'-0" [000].
2) TOP OF CHECKER PLATE REFERENCE ELEVATION 0'-0" [000].
3) REFER TO DWG# 5B1108-02-DR-11-001 FOR PLAN VIEW - FLOOR TO 10'-0" T.O.S., BILL OF MATERIAL & WELD DETAILS.
4) REFER TO DWG# 5B1108-02-DR-11-002 FOR PLAN VIEW - 10'-0" T.O.S. & ABOVE.
5) REFER TO DWG# 5B1108-02-DR-11-003~005 FOR ELEVATION VIEWS.
6) REFER TO DWG# 5B1108-02-DR-11-007 & 008 FOR PLATFORM & LADDER DETAILS.
7) REFER TO DWG# 5B1108-02-DR-11-009 FOR ISO VIEWS.

PROFESSIONAL ENGINEER ALBERTA
TREVOR W. FREEMAN
Trevor 09/14

NO.	REVISION	BY	CHK	DATE
1	AS BUILT	TBB		06/05/14
0	ISSUED FOR CONSTRUCTION	BS		11/09/13

CUSTOMER REFERENCE: #407014-00120

5Blue Process Equipment Inc.
www.5Blue.com

CUSTOMER: DEVON NEC CORPORATION
JOB NO: 5B1108-11

PROJECT: FERRIER CENTRAL OIL BATTERY - LIQUID EXTRACTION PLANT (LEP)
LOCATION: LSD 11-02-039-08 W5M

TITLE: COMPRESSED CARDIUM GAS SEPARATOR PACKAGE (002-PK-01-1600)
OVERHEAD STRUCTURE - BRACINGS AND PLATES DETAILS

DRAWN	DES	APP	SCALE	DATE	DWG NO	SHT TTL	
BS			AS SHOWN	20/08/13	5B1108-02-DR-11-006	009	1

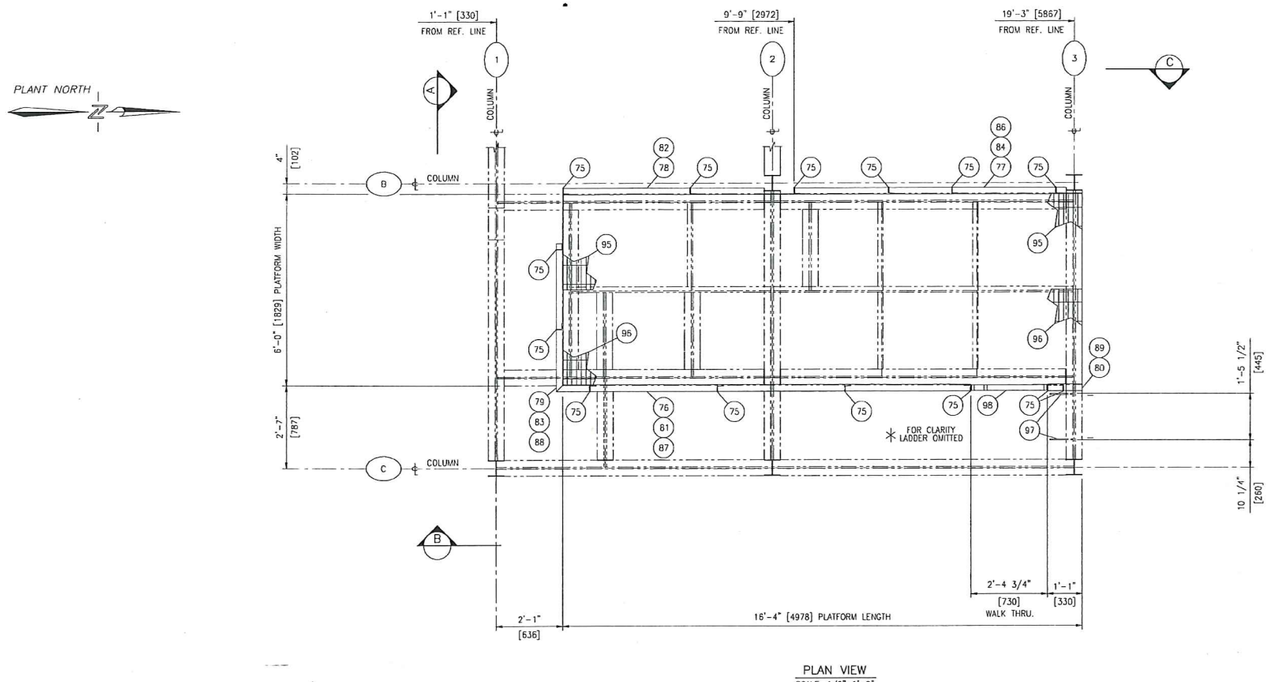

PLAN VIEW
SCALE: 1/2"=1'-0"

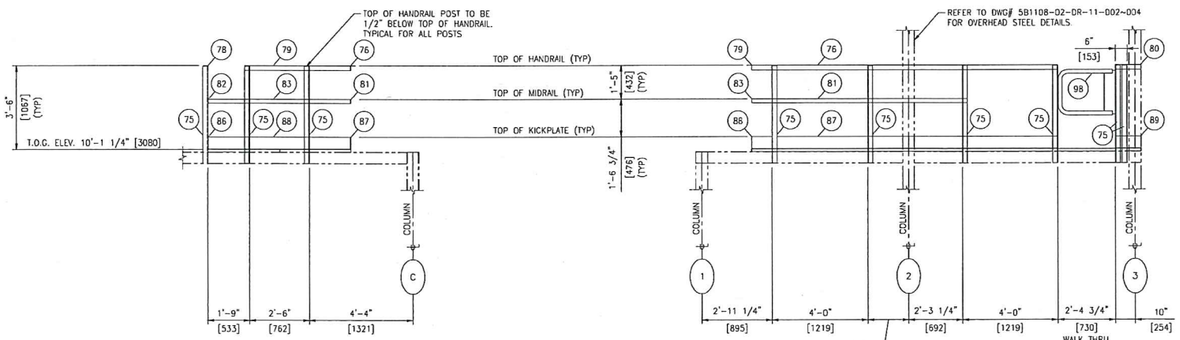

BILL OF MATERIAL

MARK	DESCRIPTION	LONG ANNOTATION	LENGTH	QTY	MATERIAL
75	HANDRAIL POST	2 1/2" x 2 1/2" x 1/4" ANGLE	4'-0 3/4"	14	SA/CSA-G40.21-44W
76	HANDRAIL	2 1/2" x 2 1/2" x 1/4" ANGLE	13'-0 1/2"	1	SA/CSA-G40.21-44W
77	HANDRAIL	2 1/2" x 2 1/2" x 1/4" ANGLE	9'-0"	1	SA/CSA-G40.21-44W
78	HANDRAIL	2 1/2" x 2 1/2" x 1/4" ANGLE	6'-4"	1	SA/CSA-G40.21-44W
79	HANDRAIL	2 1/2" x 2 1/2" x 1/4" ANGLE	4'-7 3/4"	1	SA/CSA-G40.21-44W
80	HANDRAIL	2 1/2" x 2 1/2" x 1/4" ANGLE	1'-1"	1	SA/CSA-G40.21-44W
81	MIDRAIL	2" x 1/4" FB	9'-0 1/2"	1	SA/CSA-G40.21-44W
82	MIDRAIL	2" x 1/4" FB	10'-5 1/4"	1	SA/CSA-G40.21-44W
83	MIDRAIL	2" x 1/4" FB	5'-11 1/2"	1	SA/CSA-G40.21-44W
84	MIDRAIL	2" x 1/4" FB	3'-7"	1	SA/CSA-G40.21-44W
86	KICKPLATE	6" x 1/4" FB	16'-3 3/4"	1	SA/CSA-G40.21-44W
87	KICKPLATE	6" x 1/4" FB	12'-10"	1	SA/CSA-G40.21-44W
88	KICKPLATE	6" x 1/4" FB	5'-11 1/2"	1	SA/CSA-G40.21-44W
89	KICKPLATE	6" x 1/4" FB	1'-1"	1	SA/CSA-G40.21-44W
90	KICKPLATE	7 1/2" x 1/4" FB	11 1/2"	4	SA/CSA-G40.21-44W
91	KICKPLATE	7 1/2" x 1/4" FB	9 1/2"	8	SA/CSA-G40.21-44W
92	KICKPLATE	10" SCH STD SMLS PIPE (PBE)	7 1/2"	1	SA-106B
95	GRATING	1 1/4 x 3/16" TYPE 19-4 EB SERRATED GRATING 3'-0" (SEE DETAIL)	16'-4"	1	SA/CSA-G40.21-44W
96	GRATING	1 1/4 x 3/16" TYPE 19-4 EB SERRATED GRATING 3'-0" (SEE DETAIL)	16'-4"	1	SA/CSA-G40.21-44W
97	LADDER SUPPORT PLATE	4" x 3/8" PL x 8 7/8" LG		4	SA/CSA-G40.21-44W
98	SAFETY GATE	LADDER SAFETY GATE, PS-DOORS MOD #LSG-27-PCY SELF		1	
		CLOSING c/w LSCG-AC-2206 HINGE ADAPTER BRACKET ASSY			
104	TOP AND INTER. CAGE HOOP	2 1/2" x 1/4" PL (SEE DETAIL)	4'-6"±	2	SA/CSA-G40.21-44W
105	BOTTOM CAGE HOOP	2 1/2" x 1/4" PL (SEE DETAIL)	7'-6 3/4"±	1	SA/CSA-G40.21-44W
106	STRINGERS	2 1/2" x 3/8" FB (SEE DETAIL)	15'-5 1/4"	2	SA/CSA-G40.21-44W
107	RUNGS	3/4"ø ROUND BAR	1'-4 3/8"	15	SA/CSA-G40.21-44W
108	CAGE BARS	2" x 1/4" PL	6'-10"±	2	SA/CSA-G40.21-44W
109	CAGE BARS	2" x 1/4" PL	6'-7"±	2	SA/CSA-G40.21-44W

NOTES

1) ALL PRIMARY DIMENSIONS ARE IN IMPERIAL AND ALL SECONDARY DEMENSIONS ARE IN METRIC mm 0'-0" [000].
2) TOP OF CHECKER PLATE REFERENCE ELEVATION 0'-0" [000].
3) REFER TO DWG# 5B1108-02-DR-11-001 FOR PLAN VIEW - FLOOR TO 10'-0" T.O.S., BILL OF MATERIAL & WELD DETAILS.
4) REFER TO DWG# 5B1108-02-DR-11-002 FOR PLAN VIEW - 10'-0" T.O.S. & ABOVE
5) REFER TO DWG# 5B1108-02-DR-11-003~005 FOR ELEVATION VIEWS.
6) REFER TO DWG# 5B1108-02-DR-11-006 FOR FOR BRACINGS AND PLATES DETAILS
7) REFER TO DWG# 5B1108-02-DR-11-008 FOR GRATING CUTOUTS & LADDER DETAILS.
8) REFER TO DWG# 5B1108-02-DR-11-009 FOR ISO VIEWS.

NO.	REVISION	BY	CHK	DATE
1	AS BUILT	TBB		06/05/14
0	ISSUED FOR CONSTRUCTION	BS		26/09/13

PROFESSIONAL ENGINEER ALBERTA TREVOR W. FREEMAN
June 19/14

CUSTOMER REFERENCE: #407014-00120

5Blue Process Equipment Inc.
www.5Blue.com

CUSTOMER: DEVON NEC CORPORATION
JOB NO: 5B1108-11

PROJECT: FERRIER CENTRAL OIL BATTERY - LIQUID EXTRACTION PLANT (LEP)
LOCATION: LSD 11-02-039-08 W5M

TITLE: COMPRESSED CARDIUM GAS SEPARATOR PACKAGE (002-PK-01-1600)
OVERHEAD STRUCTURE - PLATFORM DETAILS

DRAWN	CHK	APP	SCALE	DATE	DWG NO	SHT TTL	
BS			AS SHOWN	20/08/13	5B1108-02-DR-11-007	009	1

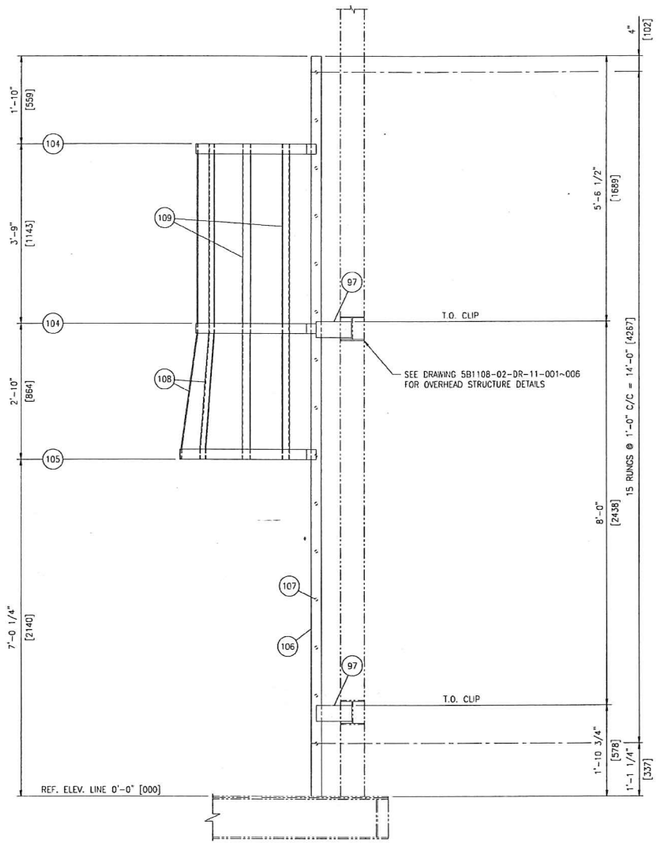

LADDER ELEVATION VIEW
SCALE 3/4"=1'-0"
LOOKING WEST

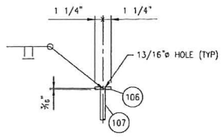

LADDER RUNG DETAIL (TYP)

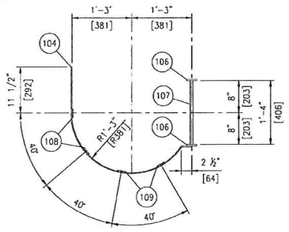

TOP AND INTER. CAGE HOOP DETAIL
SCALE: 3/4"=1'-0"
(2) REQUIRED

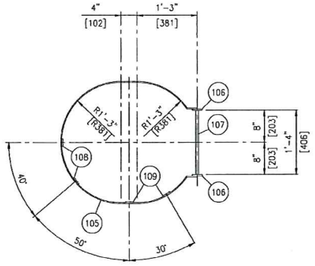

BOTTOM CAGE HOOP DETAIL
SCALE: 3/4"=1'-0"
(1) REQUIRED

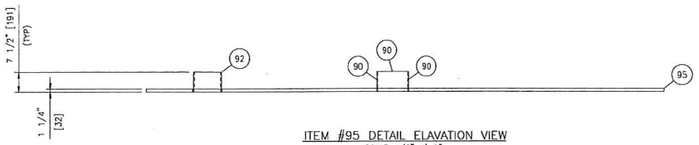

ITEM #95 DETAIL ELAVATION VIEW
SCALE: 1/2"=1'-0"

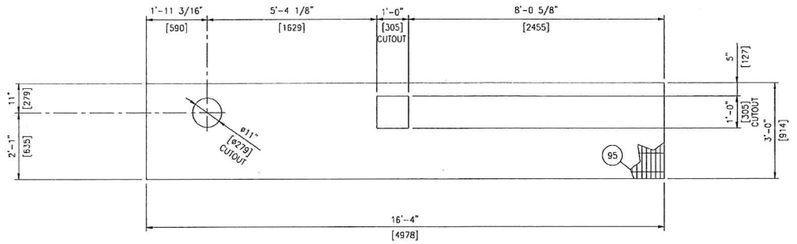

ITEM #95 PLAN VIEW
SCALE: 1/2"=1'-0"
(1) REQUIRED

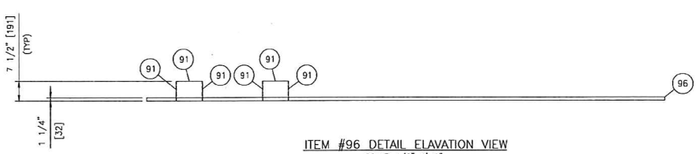

ITEM #96 DETAIL ELAVATION VIEW
SCALE: 1/2"=1'-0"

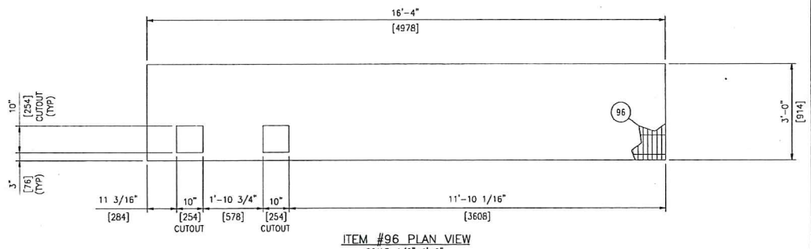

ITEM #96 PLAN VIEW
SCALE: 1/2"=1'-0"
(1) REQUIRED

NOTES

1) ALL PRIMARY DIMENSIONS ARE IN IMPERIAL AND ALL SECONDARY DIMENSIONS ARE IN METRIC mm 0'-0" [000].
2) TOP OF CHECKER PLATE REFERENCE ELEVATION 0'-0" [000].
3) REFER TO DWG# 5B1108-02-DR-11-001 FOR PLAN VIEW - FLOOR TO 10'-0" T.O.S., BILL OF MATERIAL & WELD DETAILS.
4) REFER TO DWG# 5B1108-02-DR-11-002 FOR PLAN VIEW - 10'-0" T.O.S & ABOVE.
5) REFER TO DWG# 5B1108-02-DR-11-003~005 FOR ELEVATION VIEWS.
6) REFER TO DWG# 5B1108-02-DR-11-006 FOR FOR BRACINGS AND PLATES DETAILS
7) REFER TO DWG# 5B1108-02-DR-11-007 FOR PLATFORM DETAILS AND BILL OF MATERIAL.
8) REFER TO DWG# 5B1108-02-DR-11-009 FOR ISO VIEWS.

PROFESSIONAL ENGINEER ALBERTA
TREVOR W. FREEMAN
29119
June 19/14

NO.	REVISION	BY	CHK	DATE
1	AS BUILT	TBB		06/05/14
0	ISSUED FOR CONSTRUCTION	BS		26/09/13

CUSTOMER REFERENCE: #407014-00120

5Blue Process Equipment Inc.
www.5Blue.com

CUSTOMER: DEVON NEC CORPORATION
JOB NO: 5B1108-11

PROJECT: FERRIER CENTRAL OIL BATTERY - LIQUID EXTRACTION PLANT (LEP)
LOCATION: LSD 11-02-039-08 W5M

TITLE: COMPRESSED CARDIUM GAS SEPARATOR PACKAGE (002-PK-01-1600)
OVERHEAD STRUCTURE - GRATING CUTOUTS & LADDER DETAILS

DRAWN	CHK	APP	SCALE	DATE	DWG NO	SHT TTL
BS			AS SHOWN	20/08/13	5B1108-02-DR-11-008	009

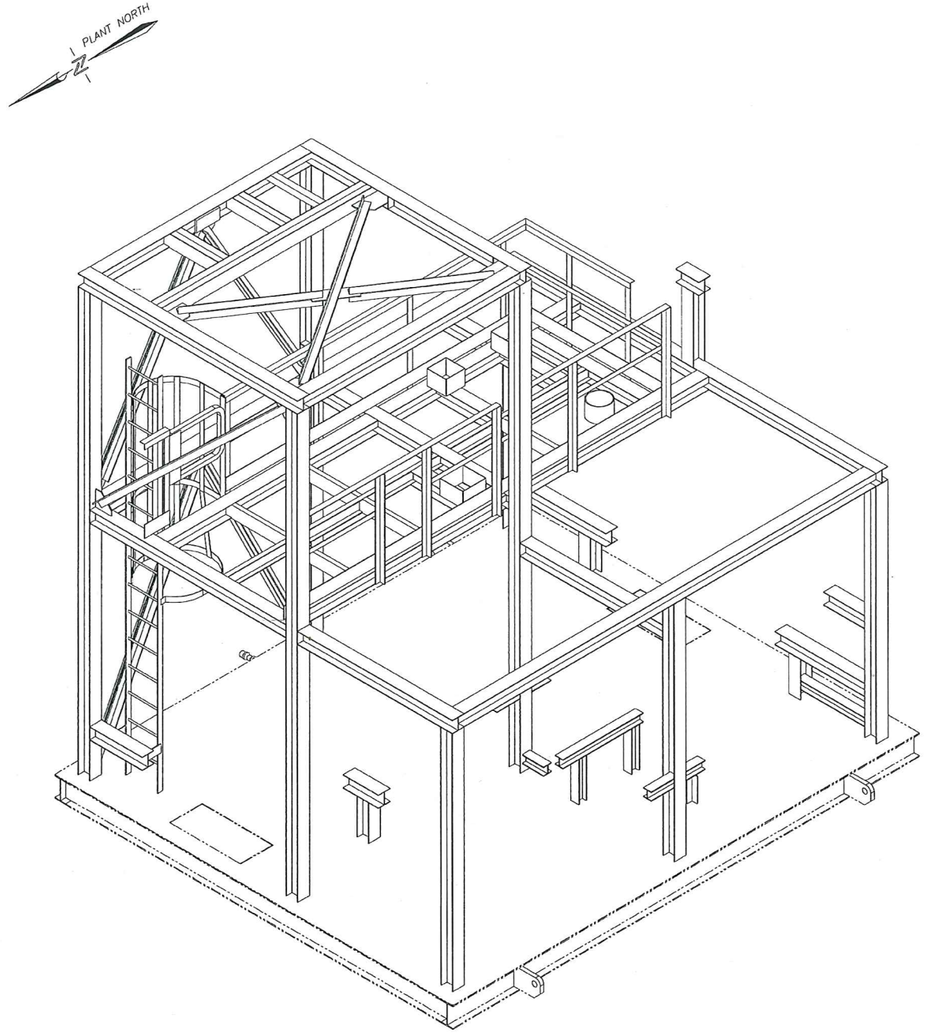

ISO VIEW
N.T.S.

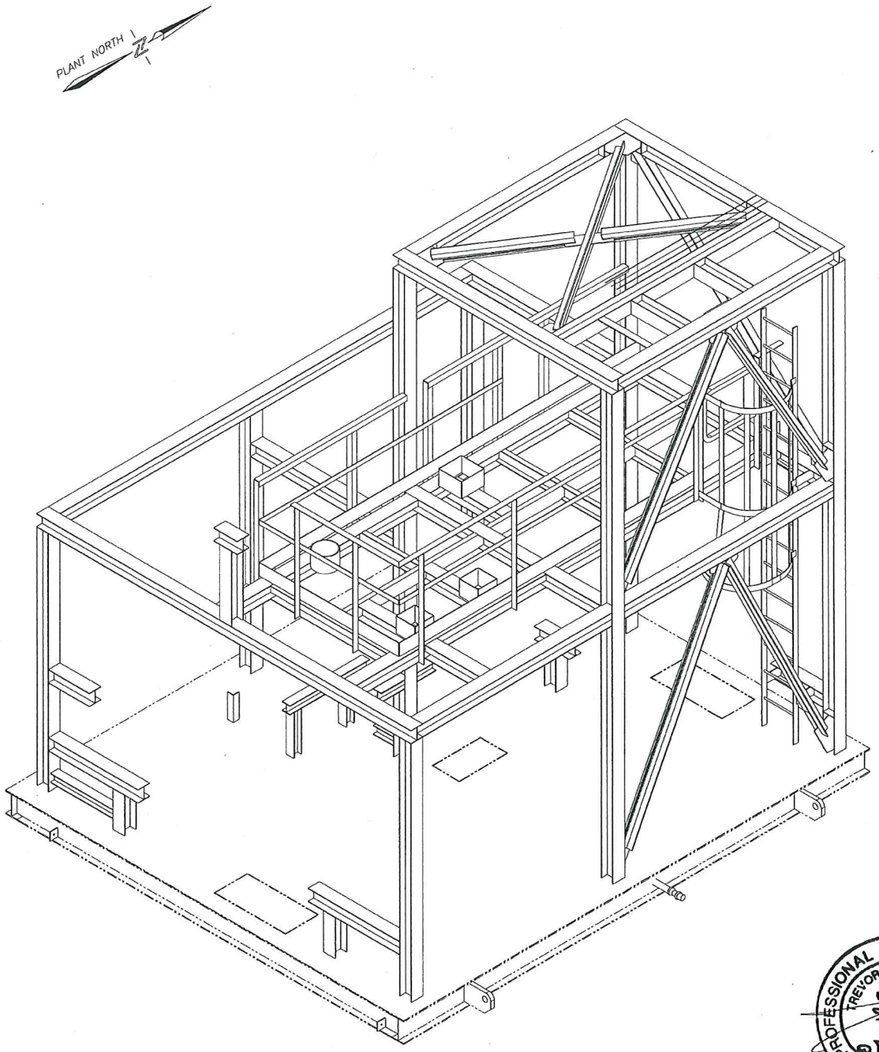

ISO VIEW
N.T.S.

NOTES

1) ALL PRIMARY DIMENSIONS ARE IN IMPERIAL AND ALL SECONDARY DEMENSIONS ARE IN METRIC mm 0'-0" [000].
2) TOP OF CHECKER PLATE REFERENCE ELEVATION 0'-0" [000].
3) REFER TO DWG# 5B1108-02-DR-11-001 FOR PLAN VIEW – FLOOR TO 10'-0" T.O.S., BILL OF MATERIAL & WELD DETAILS
4) REFER TO DWG# 5B1108-02-DR-11-002 FOR PLAN VIEW – 10'-0" T.O.S. & ABOVE.
5) REFER TO DWG# 5B1108-02-DR-11-003-005 FOR ELEVATION VIEWS
6) REFER TO DWG# 5B1108-02-DR-11-006 FOR FOR BRACINGS AND PLATES DETAILS
7) REFER TO DWG# 5B1108-02-DR-11-007 FOR PLATFORM DETAILS AND BILL OF MATERIAL.
8) REFER TO DWG# 5B1108-02-DR-11-008 FOR GRATING CUTOUTS & LADDER DETAILS

NO.	REVISION	BY	CHK	DATE
1	AS BUILT	TBB		06/05/14
0	ISSUED FOR CONSTRUCTION	BS		26/09/13

PROFESSIONAL ENGINEER ALBERTA
TREVOR W. FREEMAN
June 19/14

CUSTOMER REFERENCE #407014-00120

5Blue Process Equipment Inc.
www.5Blue.com

CUSTOMER: DEVON NEC CORPORATION
JOB NO. 5B1108-11

PROJECT: FERRIER CENTRAL OIL BATTERY – LIQUID EXTRACTION PLANT (LEP)
LOCATION: LSD 11-02-039-08 W5M

TITLE: COMPRESSED CARDIUM GAS SEPARATOR PACKAGE (002-PK-01-1600)
OVERHEAD STRUCTURE – ISO VIEWS

DRAWN	DES	APP	SCALE	DATE	DWG NO	SHT TTL	
BS			N.T.S.	20/08/13	5B1108-02-DR-11-009	009	1

5Blue
Process Equipment Inc.

A5 Piping Isometric Drawings with Bills of Materials with P.Eng Stamp

2303-8th Street, Nisku Alberta, T9E-7Z3 CANADA

THIS IS THE EXCLUSIVE PROPERTY OF INTI DESIGNS AND MAY NOT BE COPIED OR COMMUNICATED TO A THIRD PARTY WITHOUT THE WRITTEN AUTHORIZATION OF INTI DESIGNS.

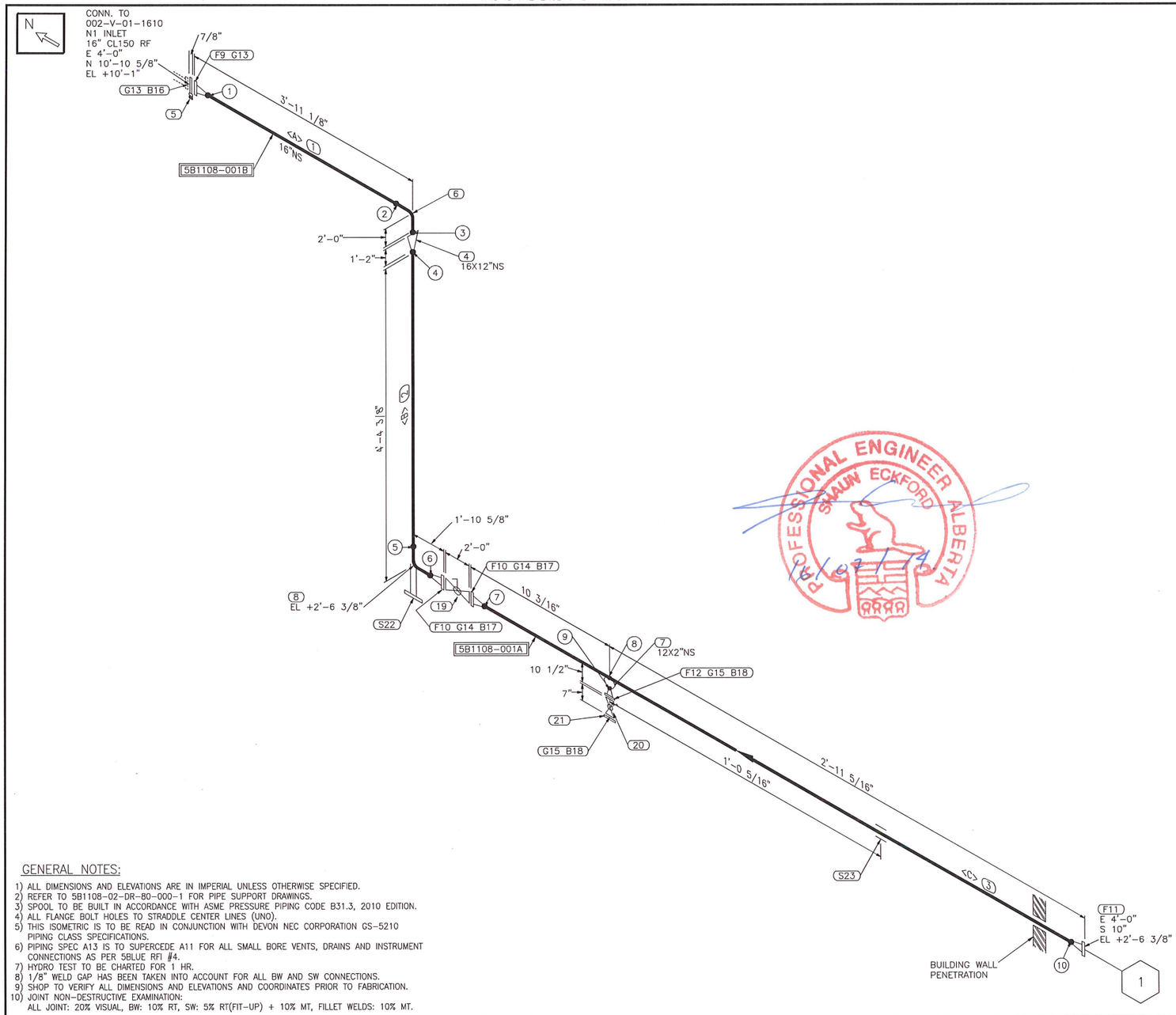

BILL OF MATERIAL

SHOP MATERIALS

MARK	SIZE (INCH)	DESCRIPTION	QTY	WEIGHT (LBS)
		PIPE		
1	16	PIPE, SCH STD, ASTM A106B, SMLS, B36.10	1.5'	93.3
2	12	PIPE, SCH STD, ASTM A106B, SMLS, B36.10	2.9'	141.5
3	12	PIPE, SCH STD, ASTM A333 GR6, SMLS, B36.10	3.1'	149.8
		FITTINGS		
4	16X12	CON REDUCER, SCH STD, ASTM A234 WPB, B16.9	1	75.0
5	16	PADDLE BLANK & SPACER, CL150, RF, ASTM A516 GR 70N, B16.48	1	79.0
6	16	90 DEG LR ELBOW, SCH STD, ASTM A234 WPB, B16.9	1	208.0
7	12X2	WELDOLET, SCH 80, ASTM A350 LF2 CL1, MSS SP-97	1	1.8
8	12	90 DEG LR ELBOW, SCH STD, ASTM A234 WPB, B16.9	1	122.0
		FLANGES		
9	16	FLANGE, CL150, SCH STD, RFWN, ASTM A105N, B16.5	1	127.0
10	12	FLANGE, CL150, SCH STD, RFWN, ASTM A105N, B16.5	2	160.0
11	12	FLANGE, CL150, SCH STD, RFWN, ASTM A350 LF2 CL1, B16.5	1	80.0
12	2	FLANGE, CL150, SCH 80, RFWN, ASTM A350 LF2 CL1, B16.5	1	6.0
		GASKETS		
13	16	GASKET, CL150, RF, 1/8" THK, 316 SS SPIRAL WOUND, FLEX FILLER CGI, CS CENTERING RING, 316 SS INNER RING, B16.20	2	2.0
14	12	GASKET, CL150, RF, 1/8" THK, 316 SS SPIRAL WOUND, FLEX FILLER CGI, CS CENTERING RING, 316 SS INNER RING, B16.20	2	2.0
15	2	GASKET, CL150, RF, 1/8" THK, 316 SS SPIRAL WOUND, FLEX FILLER CGI, CS CENTERING RING, 316 SS INNER RING, B16.20	2	2.0
		BOLTS		
16	1X6 1/2	(16) STUDBOLT c/w 2 HEX NUTS, ASTM A193 GR B7, A194 GR 2H, B16.5	1	31.0
17	7/8X4 3/4	(12) STUDBOLT c/w 2 HEX NUTS, ASTM A193 GR B7, A194 GR 2H, B16.5	2	30.0
18	5/8X3 1/4	(4) STUDBOLT c/w 2 HEX NUTS, ASTM A193 GR B7, A194 GR 2H, B16.5	2	3.0
		VALVES / IN-LINE ITEMS		
19	12	BALL VALVE, CL150, RF, GEAR OP, (BD0106AG)	1	943.0
20	2	BALL VALVE, CL150, RF, LEVER OP, (BA0106A1)	1	33.0
21	2	BLIND FLANGE, CL150, RF, ASTM A350 LF2 CL1, B16.5	1	4.0
		SUPPORTS		
22	12	L12-3-12" (L= 2'-6 3/8")	1	80.0
23	12	GU-12" & SA-5	1	3.5
		PIPE SPOOLS		
		5B1108-001A 5B1108-001B		

CUT PIPE LENGTH

PIECE NO	LENGTH (FT-INS)	N.S. (INS)	REMARKS	END ONE	END TWO	ITEM CODE
<A>	1'5 7/8"	16		BEVEL	BEVEL	13
<B>	2'10 1/4"	12		BEVEL	BEVEL	13
<C>	3'0 1/4"	12		BEVEL	BEVEL	38

TOTAL SHOP WEIGHT 2376.6
TOTAL FIELD WEIGHT 0.0
TOTAL WEIGHT-THIS DWG 2376.6

WELD NO.	SIZE	NOM. THK	WELD TYPE	DESCRIPTION	WELDER ID	DATE	NDE REPORT No.	V.T.
10	12"	SCH STD	BW					
9	2"	SCH 80	BW					
8	2"	SCH 80	LET					
7	12"	SCH STD	BW					
6	12"	SCH STD	BW					
5	12"	SCH STD	BW					
4	12"	SCH STD	BW					
3	16"	SCH STD	BW					
2	16"	SCH STD	BW					
1	16"	SCH STD	BW					

PROFESSIONAL ENGINEER ALBERTA SHAUN ECKFORD 16 Oct 14

GENERAL NOTES:

1) ALL DIMENSIONS AND ELEVATIONS ARE IN IMPERIAL UNLESS OTHERWISE SPECIFIED.
2) REFER TO 5B1108-02-DR-80-000-1 FOR PIPE SUPPORT DRAWINGS.
3) SPOOL TO BE BUILT IN ACCORDANCE WITH ASME PRESSURE PIPING CODE B31.3, 2010 EDITION.
4) ALL FLANGE BOLT HOLES TO STRADDLE CENTER LINES (UNO).
5) THIS ISOMETRIC IS TO BE READ IN CONJUNCTION WITH DEVON NEC CORPORATION GS-5210 PIPING CLASS SPECIFICATIONS.
6) PIPING SPEC A13 IS TO SUPERCEDE A11 FOR ALL SMALL BORE VENTS, DRAINS AND INSTRUMENT CONNECTIONS AS PER 5BLUE RFI #4.
7) HYDRO TEST TO BE CHARTED FOR 1 HR.
8) 1/8" WELD GAP HAS BEEN TAKEN INTO ACCOUNT FOR ALL BW AND SW CONNECTIONS.
9) SHOP TO VERIFY ALL DIMENSIONS AND ELEVATIONS AND COORDINATES PRIOR TO FABRICATION.
10) JOINT NON-DESTRUCTIVE EXAMINATION:
ALL JOINT: 20% VISUAL, BW: 10% RT, SW: 5% RT(FIT-UP) + 10% MT, FILLET WELDS: 10% MT.

REV.	D/M/Y	DESCRIPTION	BY	CHK	APP
0	29/08/2013	ISSUED FOR CONSTRUCTION	RR	BB	

LEGEND:
○ : WELD NO.
▭ : MARK NO.
FFW ○ : FIELD FIT WELD
✕ : FIELD WELD
4 : SPOOL NUMBER
: PIPE SUPPORT

STD WELD PROC:	5B-102/103	PAINT SYSTEM:	SEE E&IL
L.T. WELD PROC:	5B-102/103	INSULATION:	NA
RATING/SPEC:	CL150/A11	SANDBLAST:	SSPC-SP6
HYDROTEST PSIG:	428	DESIGN TEMP °F:	100
RADIOGRAPHY:	10%	DESIGN PRES PSIG:	285
STRESS RELIEVE:	NO		

5Blue Process Equipment Inc.

INTI DESIGNS

TITLE: DEVON NEC CORPORATION.
FERRIER CENTRAL PROCESSING FACILITY
CENTRAL OIL BATTERY - LIQUID EXTRACTION PLANT (LEP)
PIPING ISOMETRIC
LINE NO. 324-PG-A11-01338

CLIENT DOCUMENT NUMBER	ISOMETRIC NUMBER	REV.
TBD	5B1108-02-DR-80-001-1	0

THIS IS THE EXCLUSIVE PROPERTY OF INTI DESIGNS AND MAY NOT BE COPIED OR COMMUNICATED TO A THIRD PARTY WITHOUT THE WRITTEN AUTHORIZATION OF INTI DESIGNS.

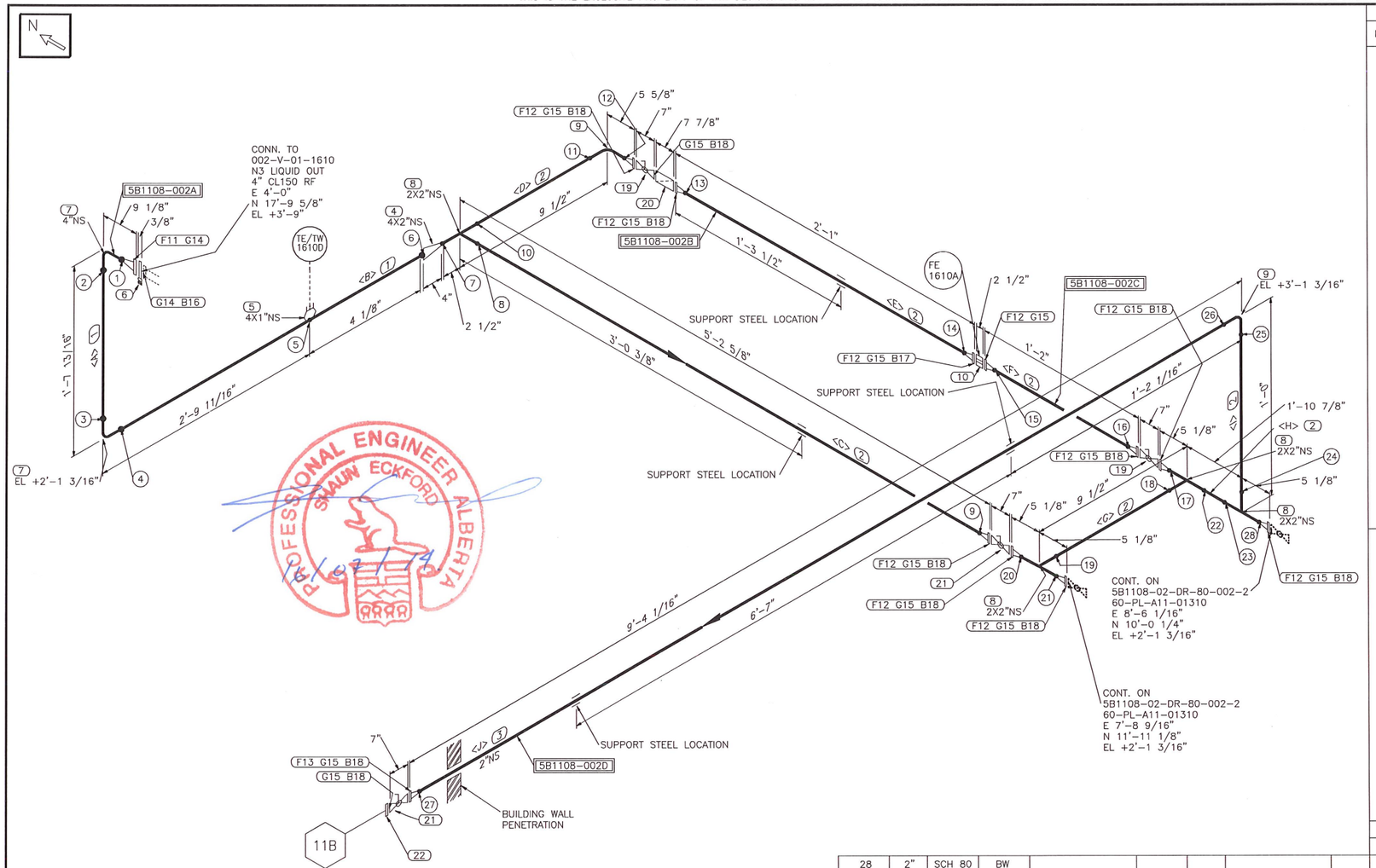

BILL OF MATERIAL

MARK	SIZE (INCH)	DESCRIPTION	QTY	WEIGHT (LBS)
		SHOP MATERIALS		
		PIPE		
1	4	PIPE, SCH STD, ASTM A106B, SMLS, B36.10	3.3'	35.3
2	2	PIPE, SCH 80, ASTM A106B, SMLS, B36.10	9.9'	49.3
3	2	PIPE, SCH 80, ASTM A333 GR6, SMLS, B36.10	8.9'	44.5
		FITTINGS		
4	4X2	CON REDUCER, SCH STDx80, ASTM A234 WPB, B16.9	1	3.1
5	4X1	THREADOLET, CL3000, ASTM A105N, MSS SP-97	1	0.7
6	4	SPEC BLIND, CL150, RF, ASTM A516 GR 70N, B16.48	1	8.0
7	4	90 DEG LR ELBOW, SCH STD, ASTM A234 WPB, B16.9	2	17.4
8	2X2	TEE, SCH 80, ASTM A234 WPB, B16.9	4	14.8
9	2	90 DEG LR ELBOW, SCH 80, ASTM A234 WPB, B16.9	2	4.4
10	2	FLOW METER, CL150, RF, (FE-1610A)	1	5.0
		FLANGES		
11	4	FLANGE, CL150, SCH STD, RFWN, ASTM A105N, B16.5	1	15.0
12	2	FLANGE, CL150, SCH 80, RFWN, ASTM A105N, B16.5	10	60.0
13	2	FLANGE, CL150, SCH 80, RFWN, ASTM A350 LF2 CL1, B16.5	1	6.0
		GASKETS		
14	4	GASKET, CL150, RF, 1/8" THK, 316 SS SPIRAL WOUND, FLEX FILLER CGI, CS CENTERING RING, 316 SS INNER RING, B16.20	2	2.0
15	2	GASKET, CL150, RF, 1/8" THK, 316 SS SPIRAL WOUND, FLEX FILLER CGI, CS CENTERING RING, 316 SS INNER RING, B16.20	13	13.0
		BOLTS		
16	5/8X4 1/4	(8) STUDBOLT c/w 2 HEX NUTS, ASTM A193 GR B7, A194 GR 2H, B16.5	1	1.0
17	5/8X6	(4) STUDBOLT c/w 2 HEX NUTS, ASTM A193 GR B7, A194 GR 2H, B16.5	1	1.0
18	5/8X3 1/4	(4) STUDBOLT c/w 2 HEX NUTS, ASTM A193 GR B7, A194 GR 2H, B16.5	11	11.0
		VALVES / IN-LINE ITEMS		
19	2	BALL VALVE, CL150, RF, LEVER OP, (BV0106A)	2	66.0
20	2	Y-STRAINER, CL 150, RF (SP012504)	1	23.0
21	2	BALL VALVE, CL150, RF, LEVER OP, (BA0106A1)	2	66.0
22	2	BLIND FLANGE, CL150, RF, ASTM A350 LF2 CL1, B16.5	1	4.0
		PIPE SPOOLS		
		5B1108-002A 5B1108-002B 5B1108-002C 5B1108-002D		

CUT PIPE LENGTH

PIECE NO	LENGTH (FT-INS)	N.S. (INS)	REMARKS	END ONE	END TWO	ITEM CODE
<A>	7 9/16"	4		BEVEL	BEVEL	86
<B>	2'7 11/16"	4		BEVEL	BEVEL	86
<C>	4'9 3/8"	2		BEVEL	BEVEL	81
<D>	3 3/4"	2		BEVEL	BEVEL	81
<E>	1'7 3/4"	2		BEVEL	BEVEL	81
<F>	8 3/4"	2		BEVEL	BEVEL	81
<G>	4 1/4"	2		BEVEL	BEVEL	81
<H>	1'5 5/8"	2		BEVEL	BEVEL	81
<I>	6 1/4"	2		BEVEL	BEVEL	81
<J>	8'10 1/4"	2		BEVEL	BEVEL	80

TOTAL SHOP WEIGHT 450.3
TOTAL FIELD WEIGHT 0.0
TOTAL WEIGHT-THIS DWG 450.3

GENERAL NOTES:

1) ALL DIMENSIONS AND ELEVATIONS ARE IN IMPERIAL UNLESS OTHERWISE SPECIFIED.
2) REFER TO 5B1108-02-DR-80-000-1 FOR PIPE SUPPORT DRAWINGS.
3) SPOOL TO BE BUILT IN ACCORDANCE WITH ASME PRESSURE PIPING CODE B31.3, 2010 EDITION.
4) ALL FLANGE BOLT HOLES TO STRADDLE CENTER LINES (UNO).
5) THIS ISOMETRIC IS TO BE READ IN CONJUNCTION WITH DEVON NEC CORPORATION GS-5210 PIPING CLASS SPECIFICATIONS.
6) PIPING SPEC A13 IS TO SUPERCEDE A11 FOR ALL SMALL BORE VENTS, DRAINS AND INSTRUMENT CONNECTIONS AS PER 5BLUE RFI #4.
7) HYDRO TEST TO BE CHARTED FOR 1 HR.
8) 1/8" WELD GAP HAS BEEN TAKEN INTO ACCOUNT FOR ALL BW AND SW CONNECTIONS.
9) SHOP TO VERIFY ALL DIMENSIONS AND ELEVATIONS AND COORDINATES PRIOR TO FABRICATION.
10) JOINT NON-DESTRUCTIVE EXAMINATION:
ALL JOINT: 20% VISUAL, BW: 10% RT, SW: 5% RT(FIT-UP) + 10% MT, FILLET WELDS: 10% MT.

WELD NO.	SIZE	NOM. THK	WELD TYPE	DESCRIPTION	WELDER ID	DATE	NDE REPORT No.	V.T.
28	2"	SCH 80	BW					
27	2"	SCH 80	BW					
26	2"	SCH 80	BW					
25	2"	SCH 80	BW					
24	2"	SCH 80	BW					
23	2"	SCH 80	BW					
22	2"	SCH 80	BW					
21	2"	SCH 80	BW					
20	2"	SCH 80	BW					
19	2"	SCH 80	BW					
18	2"	SCH 80	BW					
17	2"	SCH 80	BW					
16	2"	SCH 80	BW					
15	2"	SCH 80	BW					
14	2"	SCH 80	BW					
13	2"	SCH 80	BW					
12	2"	SCH 80	BW					
11	2"	SCH 80	BW					
10	2"	SCH 80	BW					
9	2"	SCH 80	BW					
8	2"	SCH 80	BW					
7	2"	SCH 80	BW					
6	4"	SCH STD	BW					
5	1"	CL3000	LET					
4	4"	SCH STD	BW					
3	4"	SCH STD	BW					
2	4"	SCH STD	BW					
1	4"	SCH STD	BW					

REV.	D/M/Y	DESCRIPTION	BY	CHK	APP
0	30/08/2013	ISSUED FOR CONSTRUCTION	RR	BB	

LEGEND:
○ : WELD NO.
▭ : MARK NO.
FFW ○ : FIELD FIT WELD
✕ : FIELD WELD
4 : SPOOL NUMBER
: PIPE SUPPORT

STD WELD PROC:	5B-102/103	PAINT SYSTEM:	SEE E&IL
L.T. WELD PROC:	5B-102/103	INSULATION:	NA
RATING/SPEC:	CL150/A11	SANDBLAST:	SSPC-SP6
HYDROTEST PSIG:	428	DESIGN TEMP °F:	100
RADIOGRAPHY:	10%	DESIGN PRES PSIG:	285
STRESS RELIEVE:	NO		

5Blue Process Equipment Inc.

INTI DESIGNS

TITLE: DEVON NEC CORPORATION.
FERRIER CENTRAL PROCESSING FACILITY
CENTRAL OIL BATTERY – LIQUID EXTRACTION PLANT (LEP)
PIPING ISOMETRIC
LINE NO. 60-PL-A11-01310

CLIENT DOCUMENT NUMBER	ISOMETRIC NUMBER	REV.
TBD	5B1108-02-DR-80-002-1	0

THIS IS THE EXCLUSIVE PROPERTY OF INTI DESIGNS AND MAY NOT BE COPIED OR COMMUNICATED TO A THIRD PARTY WITHOUT THE WRITTEN AUTHORIZATION OF INTI DESIGNS.

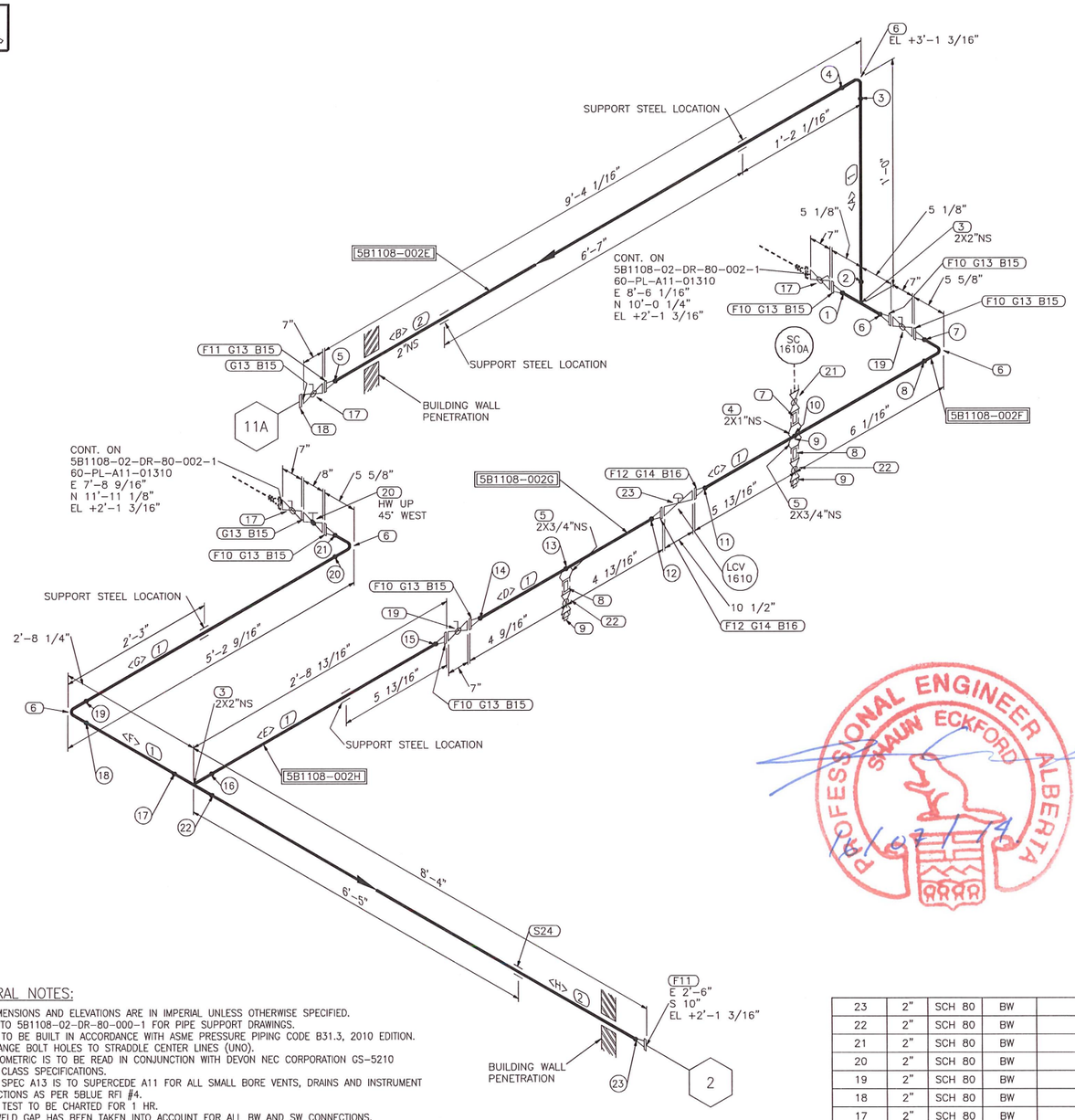

BILL OF MATERIAL

MARK	SIZE (INCH)	DESCRIPTION	QTY	WEIGHT (LBS)
		SHOP MATERIALS		
		PIPE		
1	2	PIPE, SCH 80, ASTM A106B, SMLS, B36.10	10.6'	52.9
2	2	PIPE, SCH 80, ASTM A333 GR6, SMLS, B36.10	16.8'	84.1
		FITTINGS		
3	2X2	TEE, SCH 80, ASTM A234 WPB, B16.9	2	7.4
4	2X1	THREADOLET, CL3000, ASTM A105N, MSS SP-97	1	0.7
5	2X3/4	THREADOLET, CL3000, ASTM A105N, MSS SP-97	2	0.7
6	2	90 DEG LR ELBOW, SCH 80, ASTM A234 WPB, B16.9	4	8.8
7	1	NIPPLE, SCH 160, ASTM A106B, SMLS, B36.10 TBE (4.0000 LG)	1	2.9
8	3/4	NIPPLE, SCH 160, ASTM A106B, SMLS, B36.10 TBE (4.0000 LG)	2	3.9
9	3/4	SOLID ROUND HEAD PLUG, THRD, ASTM A105N, B16.11	2	0.8
		FLANGES		
10	2	FLANGE, CL150, SCH 80, RFWN, ASTM A105N, B16.5	6	36.0
11	2	FLANGE, CL150, SCH 80, RFWN, ASTM A350 LF2 CL1, B16.5	2	12.0
12	2	FLANGE, CL300, SCH 80, RFWN, ASTM A105N, B16.5	2	18.0
		GASKETS		
13	2	GASKET, CL150, RF, 1/8" THK, 316 SS SPIRAL WOUND, FLEX FILLER CGI, CS CENTERING RING, 316 SS INNER RING, B16.20	9	9.0
14	2	GASKET, CL300, RF, 1/8" THK, 316 SS SPIRAL WOUND, FLEX FILLER CGI, CS CENTERING RING, 316 SS INNER RING, B16.20	2	2.0
		BOLTS		
15	5/8X3 1/4	(4) STUDBOLT c/w 2 HEX NUTS, ASTM A193 GR B7, A194 GR 2H, B16.5	9	9.0
16	5/8X3 1/2	(8) STUDBOLT c/w 2 HEX NUTS, ASTM A193 GR B7, A194 GR 2H, B16.5	2	2.0
		VALVES / IN-LINE ITEMS		
17	2	BALL VALVE, CL150, RF, LEVER OP, (BA0106A1)	3	99.0
18	2	BLIND FLANGE, CL150, RF, ASTM A350 LF2 CL1, B16.5	1	4.0
19	2	BALL VALVE, CL150, RF, LEVER OP, (BV0106A)	2	66.0
20	2	GLOBE VALVE, CL150, RF, HW OP, (LA0106A1)	1	47.0
21	1	BALL VALVE, CL800, THRD, LEVER OP, (BA8202A)	1	1.4
22	3/4	BALL VALVE, CL800, THRD, LEVER OP, (BA8202A)	2	1.6
		INSTRUMENTS		
23	2	CONTROL VALVE, CL300, RF TAG: (LCV-1610)	1	100.0
		SUPPORTS		
24	2	GU-2" & SA-4	1	0.2
		PIPE SPOOLS		
		5B1108-002E 5B1108-002F 5B1108-002G 5B1108-002H		

CUT PIPE LENGTH

PIECE NO	LENGTH (FT-INS)	N.S. (INS)	REMARKS	END ONE	END TWO	ITEM CODE
<A>	6 1/4"	2		BEVEL	BEVEL	81
<B>	8'10 1/4"	2		BEVEL	BEVEL	80
<C>	5 7/8"	2		BEVEL	BEVEL	81
<D>	3 7/8"	2		BEVEL	BEVEL	81
<E>	2'3 1/2"	2		BEVEL	BEVEL	81
<F>	2'2 1/2"	2		BEVEL	BEVEL	81
<G>	4'8 5/16"	2		BEVEL	BEVEL	81
<H>	7'10 3/4"	2		BEVEL	BEVEL	80

TOTAL SHOP WEIGHT 569.1
TOTAL FIELD WEIGHT 0.0
TOTAL WEIGHT-THIS DWG 569.1

GENERAL NOTES:

1) ALL DIMENSIONS AND ELEVATIONS ARE IN IMPERIAL UNLESS OTHERWISE SPECIFIED.
2) REFER TO 5B1108-02-DR-80-000-1 FOR PIPE SUPPORT DRAWINGS.
3) SPOOL TO BE BUILT IN ACCORDANCE WITH ASME PRESSURE PIPING CODE B31.3, 2010 EDITION.
4) ALL FLANGE BOLT HOLES TO STRADDLE CENTER LINES (UNO).
5) THIS ISOMETRIC IS TO BE READ IN CONJUNCTION WITH DEVON NEC CORPORATION GS-5210 PIPING CLASS SPECIFICATIONS.
6) PIPING SPEC A13 IS TO SUPERCEDE A11 FOR ALL SMALL BORE VENTS, DRAINS AND INSTRUMENT CONNECTIONS AS PER 5BLUE RFI #4.
7) HYDRO TEST TO BE CHARTED FOR 1 HR.
8) 1/8" WELD GAP HAS BEEN TAKEN INTO ACCOUNT FOR ALL BW AND SW CONNECTIONS.
9) SHOP TO VERIFY ALL DIMENSIONS AND ELEVATIONS AND COORDINATES PRIOR TO FABRICATION.
10) JOINT NON-DESTRUCTIVE EXAMINATION:
ALL JOINT: 20% VISUAL, BW: 10% RT, SW: 5% RT(FIT-UP) + 10% MT, FILLET WELDS: 10% MT.

WELD NO.	SIZE	NOM. THK	WELD TYPE	DESCRIPTION	WELDER ID	DATE	NDE REPORT No.	V.T.
23	2"	SCH 80	BW					
22	2"	SCH 80	BW					
21	2"	SCH 80	BW					
20	2"	SCH 80	BW					
19	2"	SCH 80	BW					
18	2"	SCH 80	BW					
17	2"	SCH 80	BW					
16	2"	SCH 80	BW					

WELD NO.	SIZE	NOM. THK	WELD TYPE	DESCRIPTION	WELDER ID	DATE	NDE REPORT No.	V.T.
15	2"	SCH 80	BW					
14	2"	SCH 80	BW					
13	3/4"	CL3000	LET					
12	2"	SCH 80	BW					
11	2"	SCH 80	BW					
10	3/4"	CL3000	LET					
9	1"	CL3000	LET					
8	2"	SCH 80	BW					
7	2"	SCH 80	BW					
6	2"	SCH 80	BW					
5	2"	SCH 80	BW					
4	2"	SCH 80	BW					
3	2"	SCH 80	BW					
2	2"	SCH 80	BW					
1	2"	SCH 80	BW					

REV.	D/M/Y	DESCRIPTION	BY	CHK	APP
0	30/08/2013	ISSUED FOR CONSTRUCTION	RR	BB	

LEGEND:
- ○ : WELD NO.
- ⬭ : MARK NO.
- FFW ○ : FIELD FIT WELD
- ✕ : FIELD WELD
- 4 : SPOOL NUMBER
- : PIPE SUPPORT

STD WELD PROC:	5B-102/103	PAINT SYSTEM:	SEE E&IL
L.T. WELD PROC:	5B-102/103	INSULATION:	NA
RATING/SPEC:	CL150/A11	SANDBLAST:	SSPC-SP6
HYDROTEST PSIG:	428	DESIGN TEMP °F:	100
RADIOGRAPHY:	10%	DESIGN PRES PSIG:	285
STRESS RELIEVE:	NO		

5Blue Process Equipment Inc.

INTI DESIGNS

TITLE: DEVON NEC CORPORATION.
FERRIER CENTRAL PROCESSING FACILITY
CENTRAL OIL BATTERY – LIQUID EXTRACTION PLANT (LEP)
PIPING ISOMETRIC
LINE NO. 60-PL-A11-01310

CLIENT DOCUMENT NUMBER	ISOMETRIC NUMBER	REV.
TBD	5B1108-02-DR-80-002-2	0

THIS IS THE EXCLUSIVE PROPERTY OF INTI DESIGNS AND MAY NOT BE COPIED OR COMMUNICATED TO A THIRD PARTY WITHOUT THE WRITTEN AUTHORIZATION OF INTI DESIGNS.

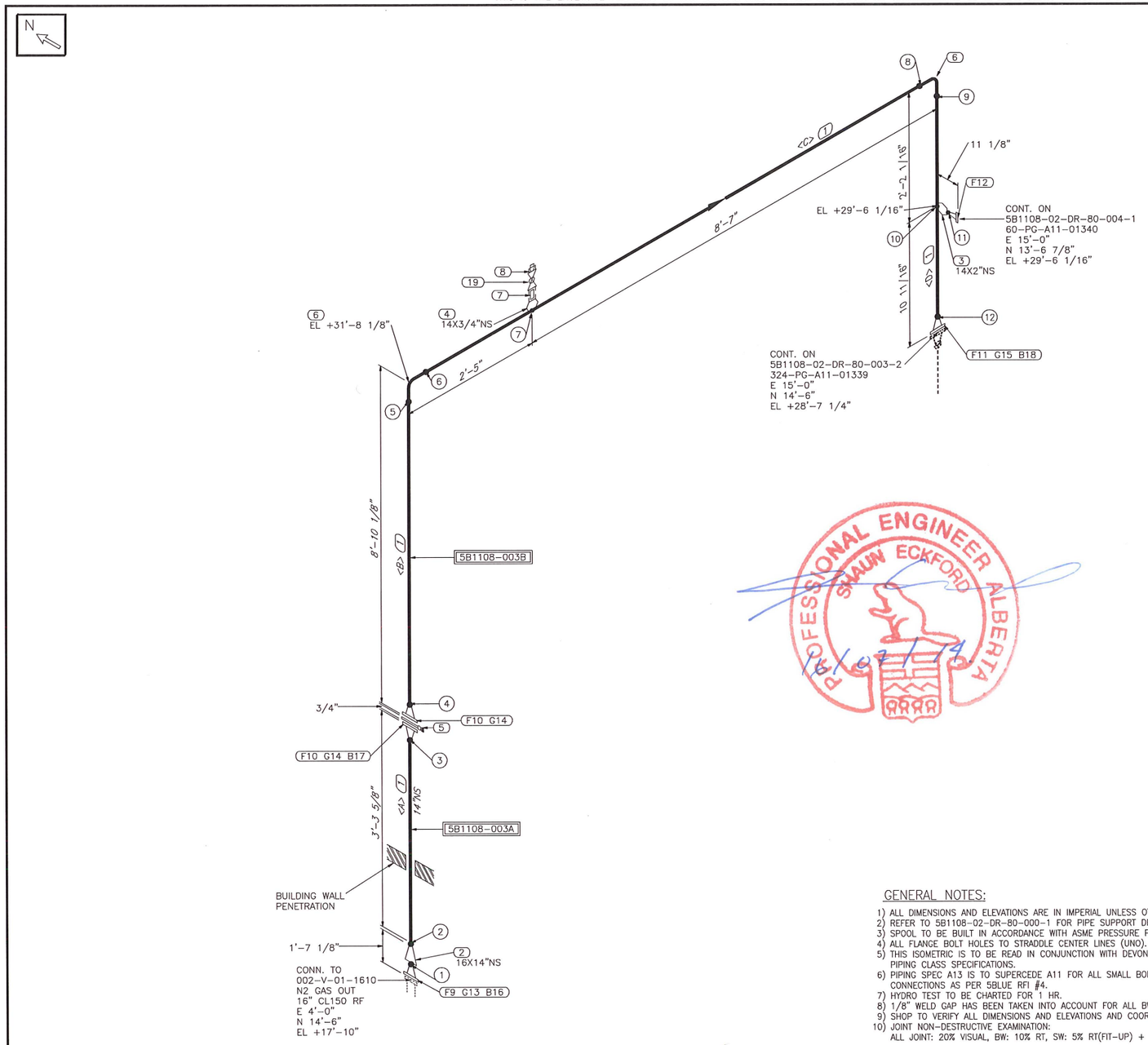

PROFESSIONAL ENGINEER ALBERTA
SHAUN ECKFORD
16/07/14

BILL OF MATERIAL

MARK	SIZE (INCH)	DESCRIPTION	QTY	WEIGHT (LBS)
		SHOP MATERIALS		
		PIPE		
1	14	PIPE, SCH STD, ASTM A333 GR6, SMLS, B36.10	18.0'	977.7
		FITTINGS		
2	16X14	CON REDUCER, SCH STD, ASTM A420 WPL6, B16.9	1	77.0
3	14X2	WELDOLET, SCH 80, ASTM A350 LF2 CL1, MSS SP-97	1	1.8
4	14X3/4	THREADOLET, CL3000, ASTM A350 LF2 CL1, MSS SP-97	1	0.4
5	14	SPEC BLIND, CL150, RF, ASTM A516 GR 70N, B16.48	1	57.0
6	14	90 DEG LR ELBOW, SCH STD, ASTM A420 WPL6, B16.9	2	314.0
7	3/4	NIPPLE, SCH 160, ASTM A333 GR6, SMLS, B36.10 TBE (4.0000 MM LG)	1	2.0
8	3/4	SOLID ROUND HEAD PLUG, THRD, ASTM A350 LF2 CL1, B16.11	1	0.4
		FLANGES		
9	16	FLANGE, CL150, SCH STD, RFWN, ASTM A350 LF2 CL1, B16.5	1	127.0
10	14	FLANGE, CL150, SCH STD, RFWN, ASTM A350 LF2 CL1, B16.5	2	240.0
11	14	FLANGE, CL300, SCH STD, RFWN, ASTM A350 LF2 CL1, B16.5	1	186.0
12	2	FLANGE, CL150, SCH 80, RFWN, ASTM A350 LF2 CL1, B16.5	1	6.0
		GASKETS		
13	16	GASKET, CL150, RF, 1/8" THK, 316 SS SPIRAL WOUND, FLEX FILLER CGI, CS CENTERING RING, 316 SS INNER RING, B16.20	1	1.0
14	14	GASKET, CL150, RF, 1/8" THK, 316 SS SPIRAL WOUND, FLEX FILLER CGI, CS CENTERING RING, 316 SS INNER RING, B16.20	2	2.0
15	14	GASKET, CL300, RF, 1/8" THK, 316 SS SPIRAL WOUND, FLEX FILLER CGI, CS CENTERING RING, 316 SS INNER RING, B16.20	1	1.0
		BOLTS		
16	1X5 1/2	(16) STUDBOLT c/w 2 HEX NUTS, ASTM A193 GR B7, A194 GR 2H, B16.5	1	31.0
17	1X6 1/4	(12) STUDBOLT c/w 2 HEX NUTS, ASTM A193 GR B7, A194 GR 2H, B16.5	1	25.0
18	1 1/8X7	(20) STUDBOLT c/w 2 HEX NUTS, ASTM A193 GR B7, A194 GR 2H, B16.5	1	62.0
		VALVES / IN-LINE ITEMS		
19	3/4	BALL VALVE, CL800, THRD, LEVER OP, (BA8202A)	1	0.8
		PIPE SPOOLS		
		5B1108-003A 5B1108-003B		

CUT PIPE LENGTH

PIECE NO	LENGTH (FT-INS)	N.S. (INS)	REMARKS	END ONE	END TWO	ITEM CODE
<A>	2'10 1/2"	14		BEVEL	BEVEL	19
<B>	6'7 7/8"	14		BEVEL	BEVEL	19
<C>	7'5 3/4"	14		BEVEL	BEVEL	19
<D>	9 7/8"	14		BEVEL	BEVEL	19

TOTAL SHOP WEIGHT 2111.9
TOTAL FIELD WEIGHT 0.0
TOTAL WEIGHT-THIS DWG 2111.9

WELD NO.	SIZE	NOM. THK	WELD TYPE	DESCRIPTION	WELDER ID	DATE	NDE REPORT No.	V.T.
12	14"	SCH STD	BW					
11	2"	SCH 80	BW					
10	2"	SCH 80	LET					
9	14"	SCH STD	BW					
8	14"	SCH STD	BW					
7	3/4"	CL3000	LET					
6	14"	SCH STD	BW					
5	14"	SCH STD	BW					
4	14"	SCH STD	BW					
3	14"	SCH STD	BW					
2	14"	SCH STD	BW					
1	16"	SCH STD	BW					

GENERAL NOTES:

1) ALL DIMENSIONS AND ELEVATIONS ARE IN IMPERIAL UNLESS OTHERWISE SPECIFIED.
2) REFER TO 5B1108-02-DR-80-000-1 FOR PIPE SUPPORT DRAWINGS.
3) SPOOL TO BE BUILT IN ACCORDANCE WITH ASME PRESSURE PIPING CODE B31.3, 2010 EDITION.
4) ALL FLANGE BOLT HOLES TO STRADDLE CENTER LINES (UNO).
5) THIS ISOMETRIC IS TO BE READ IN CONJUNCTION WITH DEVON NEC CORPORATION GS-5210 PIPING CLASS SPECIFICATIONS.
6) PIPING SPEC A13 IS TO SUPERCEDE A11 FOR ALL SMALL BORE VENTS, DRAINS AND INSTRUMENT CONNECTIONS AS PER 5BLUE RFI #4.
7) HYDRO TEST TO BE CHARTED FOR 1 HR.
8) 1/8" WELD GAP HAS BEEN TAKEN INTO ACCOUNT FOR ALL BW AND SW CONNECTIONS.
9) SHOP TO VERIFY ALL DIMENSIONS AND ELEVATIONS AND COORDINATES PRIOR TO FABRICATION.
10) JOINT NON-DESTRUCTIVE EXAMINATION:
ALL JOINT: 20% VISUAL, BW: 10% RT, SW: 5% RT(FIT-UP) + 10% MT, FILLET WELDS: 10% MT.

REV.	D/M/Y	DESCRIPTION	BY	CHK / APP
0	28/08/2013	ISSUED FOR CONSTRUCTION	RR	BB

LEGEND:
○ : WELD NO.
▭ : MARK NO.
FFW ○ : FIELD FIT WELD
⋈ : FIELD WELD
4 : SPOOL NUMBER
⟂ : PIPE SUPPORT

STD WELD PROC:	5B-102/103	PAINT SYSTEM:	SEE E&IL
L.T. WELD PROC:	5B-102/103	INSULATION:	NA
RATING/SPEC:	CL150/A11	SANDBLAST:	SSPC-SP6
HYDROTEST PSIG:	428	DESIGN TEMP °F:	100
RADIOGRAPHY:	10%	DESIGN PRES PSIG:	285
STRESS RELIEVE:	NO		

5Blue Process Equipment Inc.

INTI DESIGNS

TITLE: DEVON NEC CORPORATION.
FERRIER CENTRAL PROCESSING FACILITY
CENTRAL OIL BATTERY - LIQUID EXTRACTION PLANT (LEP)
PIPING ISOMETRIC
LINE NO. 324-PG-A11-01339

CLIENT DOCUMENT NUMBER	ISOMETRIC NUMBER	REV.
TBD	5B1108-02-DR-80-003-1	0

THIS IS THE EXCLUSIVE PROPERTY OF INTI DESIGNS AND MAY NOT BE COPIED OR COMMUNICATED TO A THIRD PARTY WITHOUT THE WRITTEN AUTHORIZATION OF INTI DESIGNS.

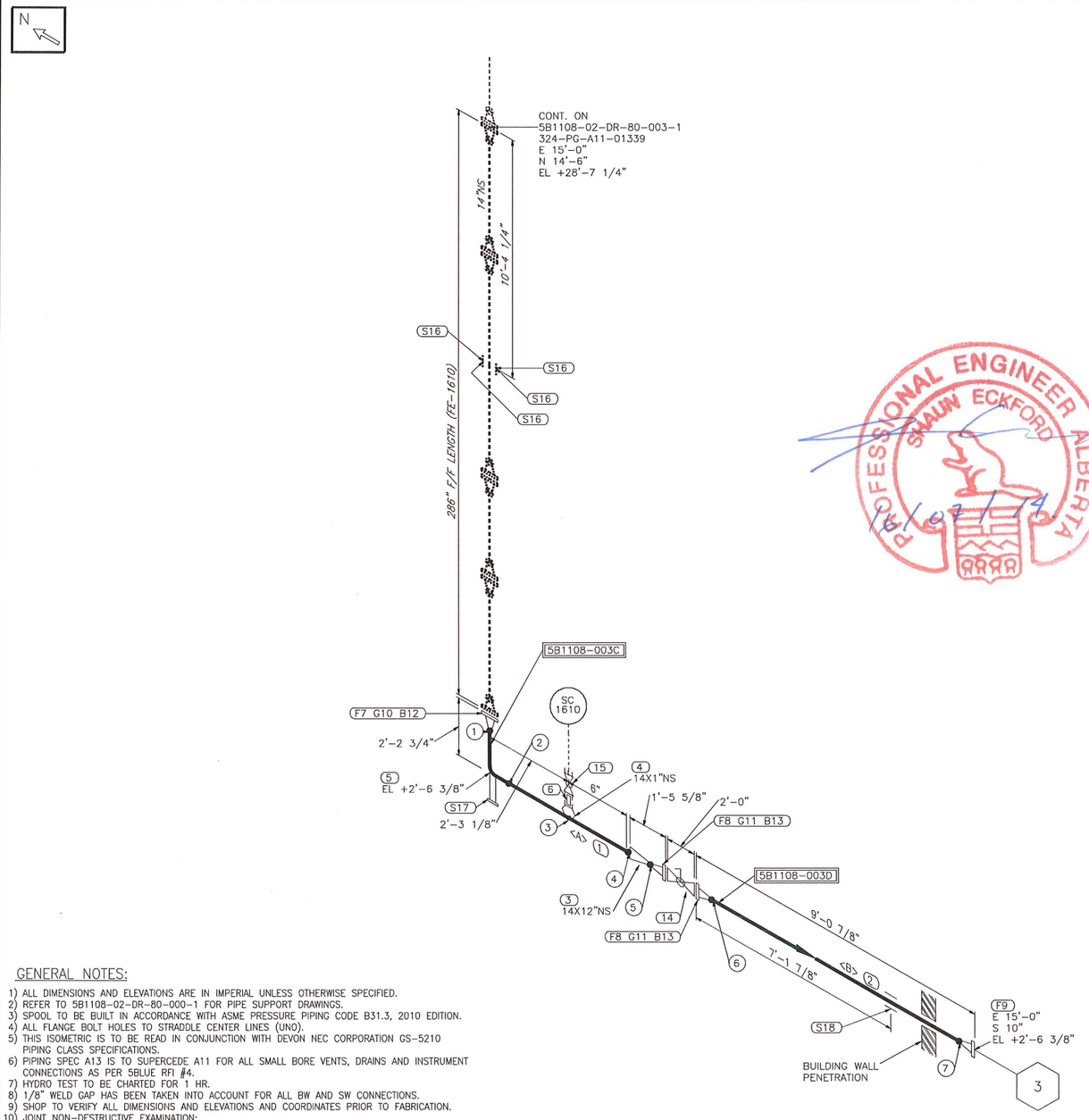

PROFESSIONAL ENGINEER ALBERTA
SHAUN ECKFORD
16/07/14

GENERAL NOTES:

1) ALL DIMENSIONS AND ELEVATIONS ARE IN IMPERIAL UNLESS OTHERWISE SPECIFIED.
2) REFER TO 5B1108-02-DR-80-000-1 FOR PIPE SUPPORT DRAWINGS.
3) SPOOL TO BE BUILT IN ACCORDANCE WITH ASME PRESSURE PIPING CODE B31.3, 2010 EDITION.
4) ALL FLANGE BOLT HOLES TO STRADDLE CENTER LINES (UNO).
5) THIS ISOMETRIC IS TO BE READ IN CONJUNCTION WITH DEVON NEC CORPORATION GS-5210 PIPING CLASS SPECIFICATIONS.
6) PIPING SPEC A13 IS TO SUPERCEDE A11 FOR ALL SMALL BORE VENTS, DRAINS AND INSTRUMENT CONNECTIONS AS PER 5BLUE RFI #4.
7) HYDRO TEST TO BE CHARTED FOR 1 HR.
8) 1/8" WELD GAP HAS BEEN TAKEN INTO ACCOUNT FOR ALL BW AND SW CONNECTIONS.
9) SHOP TO VERIFY ALL DIMENSIONS AND ELEVATIONS AND COORDINATES PRIOR TO FABRICATION.
10) JOINT NON-DESTRUCTIVE EXAMINATION:
ALL JOINT: 20% VISUAL, BW: 10% RT, SW: 5% RT(FIT-UP) + 10% MT, FILLET WELDS: 10% MT.

BILL OF MATERIAL

MARK	SIZE (INCH)	DESCRIPTION	QTY	WEIGHT (LBS)
		SHOP MATERIALS		
		PIPE		
1	14	PIPE, SCH STD, ASTM A106B, SMLS, B36.10	1.0'	54.6
2	12	PIPE, SCH STD, ASTM A333 GR6, SMLS, B36.10	8.4'	411.5
		FITTINGS		
3	14X12	CON REDUCER, SCH STD, ASTM A234 WPB, B16.9	1	63.0
4	14X1	THREADOLET, CL3000, ASTM A105N, MSS SP-97	1	0.7
5	14	90 DEG LR ELBOW, SCH STD, ASTM A234 WPB, B16.9	1	157.0
6	1	NIPPLE, SCH 160, ASTM A106B, SMLS, B36.10 TBE (4.0000 MM LG)	1	2.9
		FLANGES		
7	14	FLANGE, CL300, SCH STD, RFWN, ASTM A105N, B16.5	1	186.0
8	12	FLANGE, CL150, SCH STD, RFWN, ASTM A105N, B16.5	2	160.0
9	12	FLANGE, CL150, SCH STD, RFWN, ASTM A350 LF2 CL1, B16.5	1	80.0
		GASKETS		
10	14	GASKET, CL300, RF, 1/8" THK, 316 SS SPIRAL WOUND, FLEX FILLER CGI, CS CENTERING RING, 316 SS INNER RING, B16.20	1	1.0
11	12	GASKET, CL150, RF, 1/8" THK, 316 SS SPIRAL WOUND, FLEX FILLER CGI, CS CENTERING RING, 316 SS INNER RING, B16.20	2	2.0
		BOLTS		
12	1 1/8X7	(20) STUDBOLT c/w 2 HEX NUTS, ASTM A193 GR B7, A194 GR 2H, B16.5	1	62.0
13	7/8X4 3/4	(12) STUDBOLT c/w 2 HEX NUTS, ASTM A193 GR B7, A194 GR 2H, B16.5	2	30.0
		VALVES / IN-LINE ITEMS		
14	12	BALL VALVE, CL150, RF, GEAR OP, (BD0106AG)	1	943.0
15	1	BALL VALVE, CL800, THRD, LEVER OP, (BA8202A)	1	1.4
		SUPPORTS		
16	14	PS1	4	64.0
17	14	L12-3-14" (L= 2'-6 3/8")	1	140.0
18	12	GU-12" & SA-5	1	3.5

PIPE SPOOLS
5B1108-003C 5B1108-003D

CUT PIPE LENGTH

PIECE NO	LENGTH (FT-INS)	N.S. (INS)	REMARKS	END ONE	END TWO	ITEM CODE
<A>	1'0"	14		BEVEL	BEVEL	26
<B>	8'3 5/8"	12		BEVEL	BEVEL	19

TOTAL SHOP WEIGHT 2362.0
TOTAL FIELD WEIGHT 0.0
TOTAL WEIGHT-THIS DWG 2362.0

WELD NO.	SIZE	NOM. THK	WELD TYPE	DESCRIPTION	WELDER ID	DATE	NDE REPORT No.	V.T.
7	12"	SCH STD	BW					
6	12"	SCH STD	BW					
5	12"	SCH STD	BW					
4	14"	SCH STD	BW					
3	1"	CL3000	LET					
2	14"	SCH STD	BW					
1	14"	SCH STD	BW					

REV.	D/M/Y	DESCRIPTION	BY	CHK	APP
0	28/08/2013	ISSUED FOR CONSTRUCTION	RR	BB	

LEGEND:
- ○ : WELD NO.
- ▭ : MARK NO.
- FFW ○ : FIELD FIT WELD
- ✕ : FIELD WELD
- 4 : SPOOL NUMBER
- : PIPE SUPPORT

STD WELD PROC:	5B-102/103	PAINT SYSTEM:	SEE E&IL
L.T. WELD PROC:	5B-102/103	INSULATION:	NA
RATING/SPEC:	CL150/A11	SANDBLAST:	SSPC-SP6
HYDROTEST PSIG:	428	DESIGN TEMP °F:	100
RADIOGRAPHY:	10%	DESIGN PRES PSIG:	285
STRESS RELIEVE:	NO		

5Blue Process Equipment Inc.

INTI DESIGNS

TITLE: DEVON NEC CORPORATION.
FERRIER CENTRAL PROCESSING FACILITY
CENTRAL OIL BATTERY - LIQUID EXTRACTION PLANT (LEP)
PIPING ISOMETRIC
LINE NO. 324-PG-A11-01339

CLIENT DOCUMENT NUMBER	ISOMETRIC NUMBER	REV.
TBD	5B1108-02-DR-80-003-2	0

THIS IS THE EXCLUSIVE PROPERTY OF INTI DESIGNS AND MAY NOT BE COPIED OR COMMUNICATED TO A THIRD PARTY WITHOUT THE WRITTEN AUTHORIZATION OF INTI DESIGNS.

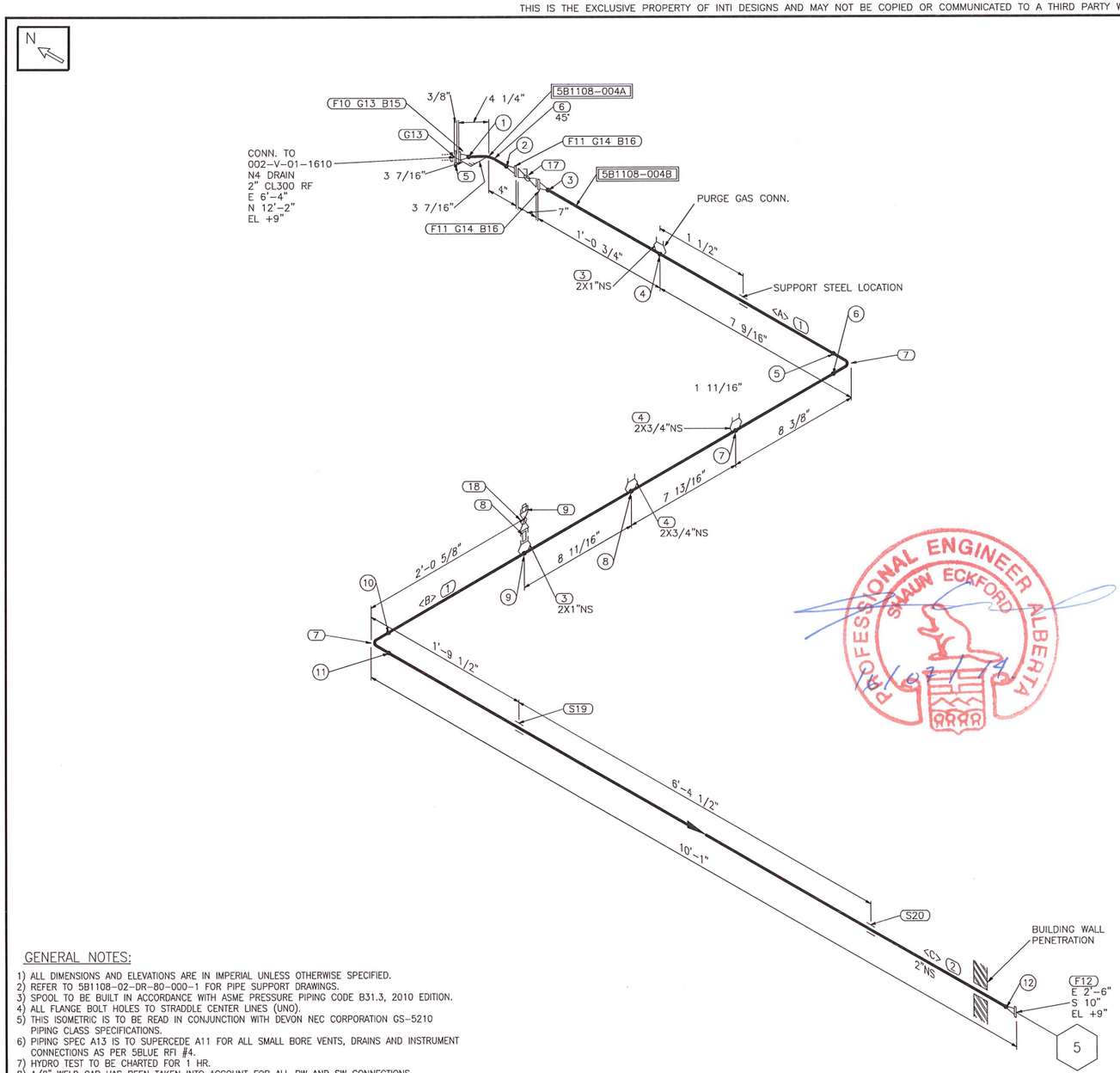

GENERAL NOTES:

1) ALL DIMENSIONS AND ELEVATIONS ARE IN IMPERIAL UNLESS OTHERWISE SPECIFIED.
2) REFER TO 5B1108-02-DR-80-000-1 FOR PIPE SUPPORT DRAWINGS.
3) SPOOL TO BE BUILT IN ACCORDANCE WITH ASME PRESSURE PIPING CODE B31.3, 2010 EDITION.
4) ALL FLANGE BOLT HOLES TO STRADDLE CENTER LINES (UNO).
5) THIS ISOMETRIC IS TO BE READ IN CONJUNCTION WITH DEVON NEC CORPORATION GS-5210 PIPING CLASS SPECIFICATIONS.
6) PIPING SPEC A13 IS TO SUPERCEDE A11 FOR ALL SMALL BORE VENTS, DRAINS AND INSTRUMENT CONNECTIONS AS PER 5BLUE RFI #4.
7) HYDRO TEST TO BE CHARTED FOR 1 HR.
8) 1/8" WELD GAP HAS BEEN TAKEN INTO ACCOUNT FOR ALL BW AND SW CONNECTIONS.
9) SHOP TO VERIFY ALL DIMENSIONS AND ELEVATIONS AND COORDINATES PRIOR TO FABRICATION.
10) JOINT NON-DESTRUCTIVE EXAMINATION:
ALL JOINT: 20% VISUAL, BW: 10% RT, SW: 5% RT(FIT-UP) + 10% MT, FILLET WELDS: 10% MT.

BILL OF MATERIAL

MARK	SIZE (INCH)	DESCRIPTION	QTY	WEIGHT (LBS)
		SHOP MATERIALS		
		PIPE		
1	2	PIPE, SCH 80, ASTM A106B, SMLS, B36.10	4.9'	24.3
2	2	PIPE, SCH 80, ASTM A333 GR6, SMLS, B36.10	9.7'	48.3
		FITTINGS		
3	2X1	THREADOLET, CL3000, ASTM A105N, MSS SP-97	2	1.3
4	2X3/4	THREADOLET, CL3000, ASTM A105N, MSS SP-97	2	0.7
5	2	SPEC BLIND, CL300, RF, ASTM A516 GR 70N, B16.48	1	3.0
6	2	45 DEG LR ELBOW, SCH 80, ASTM A234 WPB, B16.9	1	1.1
7	2	90 DEG LR ELBOW, SCH 80, ASTM A234 WPB, B16.9	2	4.4
8	1	NIPPLE, SCH 160, ASTM A106B, SMLS, B36.10 TBE (4.0000 LG)	1	2.9
9	1	SOLID ROUND HEAD PLUG, THRD, ASTM A105N, B16.11	1	0.8
		FLANGES		
10	2	FLANGE, CL300, SCH 80, RFWN, ASTM A105N, B16.5	1	9.0
11	2	FLANGE, CL150, SCH 80, RFWN, ASTM A105N, B16.5	2	12.0
12	2	FLANGE, CL150, SCH 80, RFWN, ASTM A350 LF2 CL1, B16.5	1	6.0
		GASKETS		
13	2	GASKET, CL300, RF, 1/8" THK, 316 SS SPIRAL WOUND, FLEX FILLER CGI, CS CENTERING RING, 316 SS INNER RING, B16.20	2	2.0
14	2	GASKET, CL150, RF, 1/8" THK, 316 SS SPIRAL WOUND, FLEX FILLER CGI, CS CENTERING RING, 316 SS INNER RING, B16.20	2	2.0
		BOLTS		
15	5/8X4	(8) STUDBOLT c/w 2 HEX NUTS, ASTM A193 GR B7, A194 GR 2H, B16.5	1	1.0
16	5/8X3 1/4	(4) STUDBOLT c/w 2 HEX NUTS, ASTM A193 GR B7, A194 GR 2H, B16.5	2	2.0
		VALVES / IN-LINE ITEMS		
17	2	BALL VALVE, CL150, RF, LEVER OP, (BV0106A)	1	33.0
18	1	BALL VALVE, CL800, THRD, LEVER OP, (BA8202A)	1	1.4
		SUPPORTS		
19	2	GU-2"	1	0.2
20	2	GU-2" & SA-4	1	0.2
		PIPE SPOOLS		
		5B1108-004A 5B1108-004B		

CUT PIPE LENGTH

PIECE NO	LENGTH (FT-INS)	N.S. (INS)	REMARKS	END ONE	END TWO	ITEM CODE
<A>	1'2 9/16"	2		BEVEL	BEVEL	14
<B>	3'7 1/4"	2		BEVEL	BEVEL	14
<C>	9'7 1/4"	2		BEVEL	BEVEL	17

TOTAL SHOP WEIGHT 155.3
TOTAL FIELD WEIGHT 0.0
TOTAL WEIGHT-THIS DWG 155.3

WELD NO.	SIZE	NOM. THK	WELD TYPE	DESCRIPTION	WELDER ID	DATE	NDE REPORT No.	V.T.
12	2"	SCH 80	BW					
11	2"	SCH 80	BW					
10	2"	SCH 80	BW					
9	1"	CL3000	LET					
8	3/4"	CL3000	LET					
7	3/4"	CL3000	LET					
6	2"	SCH 80	BW					
5	2"	SCH 80	BW					
4	1"	CL3000	LET					
3	2"	SCH 80	BW					
2	2"	SCH 80	BW					
1	2"	SCH 80	BW					

REV.	D/M/Y	DESCRIPTION	BY	CHK	APP
0	29/08/2013	ISSUED FOR CONSTRUCTION	RR	BB	

LEGEND:
○ : WELD NO.
▭ : MARK NO.
FFW ○ : FIELD FIT WELD
✕ : FIELD WELD
4 : SPOOL NUMBER
: PIPE SUPPORT

STD WELD PROC:	5B-102/103	PAINT SYSTEM:	SEE E&IL
L.T. WELD PROC:	5B-102/103	INSULATION:	NA
RATING/SPEC:	CL150/A11	SANDBLAST:	SSPC-SP6
HYDROTEST PSIG:	428	DESIGN TEMP °F:	100
RADIOGRAPHY:	10%	DESIGN PRES PSIG:	285
STRESS RELIEVE:	NO		

5Blue Process Equipment Inc.

INTI DESIGNS

TITLE: DEVON NEC CORPORATION.
FERRIER CENTRAL PROCESSING FACILITY
CENTRAL OIL BATTERY – LIQUID EXTRACTION PLANT (LEP)
PIPING ISOMETRIC
LINE NO. 60-HCD-A11-23460

CLIENT DOCUMENT NUMBER	ISOMETRIC NUMBER	REV.
TBD	5B1108-02-DR-80-004-1	0

THIS IS THE EXCLUSIVE PROPERTY OF INTI DESIGNS AND MAY NOT BE COPIED OR COMMUNICATED TO A THIRD PARTY WITHOUT THE WRITTEN AUTHORIZATION OF INTI DESIGNS.

N

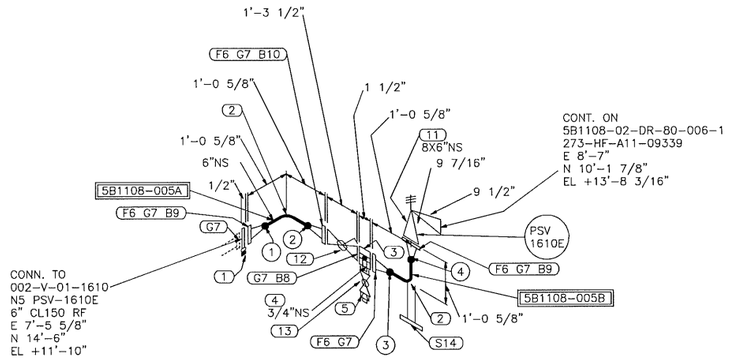

PROFESSIONAL ENGINEER ALBERTA SHAUN ECKFORD 26/02/13

BILL OF MATERIAL

MARK	SIZE (INCH)	DESCRIPTION	QTY	WEIGHT (LBS)
		SHOP MATERIALS		
		FITTINGS		
1	6	SPEC BLIND, CL150, RF, ASTM A516 GR 70N, B16.48	1	12.0
2	6	90 DEG LR ELBOW, SCH STD, ASTM A234 WPB, B16.9	2	45.6
3	6	BLEED RING, CL150, RF, C/W (1) 3/4" THRD CONN ASTM A516 70N	1	1.0
4	3/4	NIPPLE, SCH 160, ASTM A106B, SMLS, B36.10 TBE (4.0000 LG)	1	2.0
5	3/4	SOLID ROUND HEAD PLUG, THRD, ASTM A105N, B16.11	1	0.4
		FLANGES		
6	6	FLANGE, CL150, SCH STD, RFWN, ASTM A105N, B16.5	4	96.0
		GASKETS		
7	6	GASKET, CL150, RF, 1/8" THK, 316 SS SPIRAL WOUND, FLEX FILLER CGI, CS CENTERING RING, 316 SS INNER RING, B16.20	6	6.0
		BOLTS		
8	3/4X5 3/4	(8) STUDBOLT c/w 2 HEX NUTS, ASTM A193 GR B7, A194 GR 2H, B16.5	1	1.0
9	3/4X4 3/4	(8) STUDBOLT c/w 2 HEX NUTS, ASTM A193 GR B7, A194 GR 2H, B16.5	2	2.0
10	3/4X4	(8) STUDBOLT c/w 2 HEX NUTS, ASTM A193 GR B7, A194 GR 2H, B16.5	1	1.0
		VALVES / IN-LINE ITEMS		
11	8X6	RELIEF VALVE, CL150 x CL150, RF (PSV-1610E)	1	430.0
12	6	BALL VALVE, CL150, RF, LEVER OP, (BA0106A1)	1	176.0
13	3/4	BALL VALVE, CL800, THRD, LEVER OP, (BA8202A)	1	0.8
		SUPPORTS		
14	6	L11-2-6" (L= 1'-10")	1	35.0
		PIPE SPOOLS		
		5B1108-005A 5B1108-005B		

TOTAL SHOP WEIGHT 808.8
TOTAL FIELD WEIGHT 0.0
TOTAL WEIGHT-THIS DWG 808.8

WELD NO.	SIZE	NOM. THK	WELD TYPE	DESCRIPTION	WELDER ID	DATE	NDE REPORT No.	V.T.
4	6"	SCH STD	BW					
3	6"	SCH STD	BW					
2	6"	SCH STD	BW					
1	6"	SCH STD	BW					

GENERAL NOTES:

1) ALL DIMENSIONS AND ELEVATIONS ARE IN IMPERIAL UNLESS OTHERWISE SPECIFIED.
2) REFER TO 5B1108-02-DR-80-000-1 FOR PIPE SUPPORT DRAWINGS.
3) SPOOL TO BE BUILT IN ACCORDANCE WITH ASME PRESSURE PIPING CODE B31.3, 2010 EDITION.
4) ALL FLANGE BOLT HOLES TO STRADDLE CENTER LINES (UNO).
5) THIS ISOMETRIC IS TO BE READ IN CONJUNCTION WITH DEVON NEC CORPORATION GS-5210 PIPING CLASS SPECIFICATIONS.
6) PIPING SPEC A13 IS TO SUPERCEDE A11 FOR ALL SMALL BORE VENTS, DRAINS AND INSTRUMENT CONNECTIONS AS PER 5BLUE RFI #4.
7) HYDRO TEST TO BE CHARTED FOR 1 HR.
8) 1/8" WELD GAP HAS BEEN TAKEN INTO ACCOUNT FOR ALL BW AND SW CONNECTIONS.
9) SHOP TO VERIFY ALL DIMENSIONS AND ELEVATIONS AND COORDINATES PRIOR TO FABRICATION.
10) JOINT NON-DESTRUCTIVE EXAMINATION:
ALL JOINT: 20% VISUAL, BW: 10% RT, SW: 5% RT(FIT-UP) + 10% MT, FILLET WELDS: 10% MT.

REV.	D/M/Y	DESCRIPTION	BY	CHK	APP
0	23/08/2013	ISSUED FOR CONSTRUCTION	RR	BB	

LEGEND:
○ : WELD NO.
▭ : MARK NO.
FFW ○ : FIELD FIT WELD
✕ : FIELD WELD
4 : SPOOL NUMBER
: PIPE SUPPORT

STD WELD PROC:	5B-102/103	PAINT SYSTEM:	SEE E&IL
L.T. WELD PROC:	5B-102/103	INSULATION:	NA
RATING/SPEC:	CL150/A11	SANDBLAST:	SSPC-SP6
HYDROTEST PSIG:	428	DESIGN TEMP °F:	100
RADIOGRAPHY:	10%	DESIGN PRES PSIG:	285
STRESS RELIEVE:	NO		

5Blue Process Equipment Inc.

INTI DESIGNS

TITLE: DEVON NEC CORPORATION.
FERRIER CENTRAL PROCESSING FACILITY
CENTRAL OIL BATTERY – LIQUID EXTRACTION PLANT (LEP)
PIPING ISOMETRIC
LINE NO. 168-PG-A11-01341

CLIENT DOCUMENT NUMBER	ISOMETRIC NUMBER	REV.
TBD	5B1108-02-DR-80-005-1	0

THIS IS THE EXCLUSIVE PROPERTY OF INTI DESIGNS AND MAY NOT BE COPIED OR COMMUNICATED TO A THIRD PARTY WITHOUT THE WRITTEN AUTHORIZATION OF INTI DESIGNS.

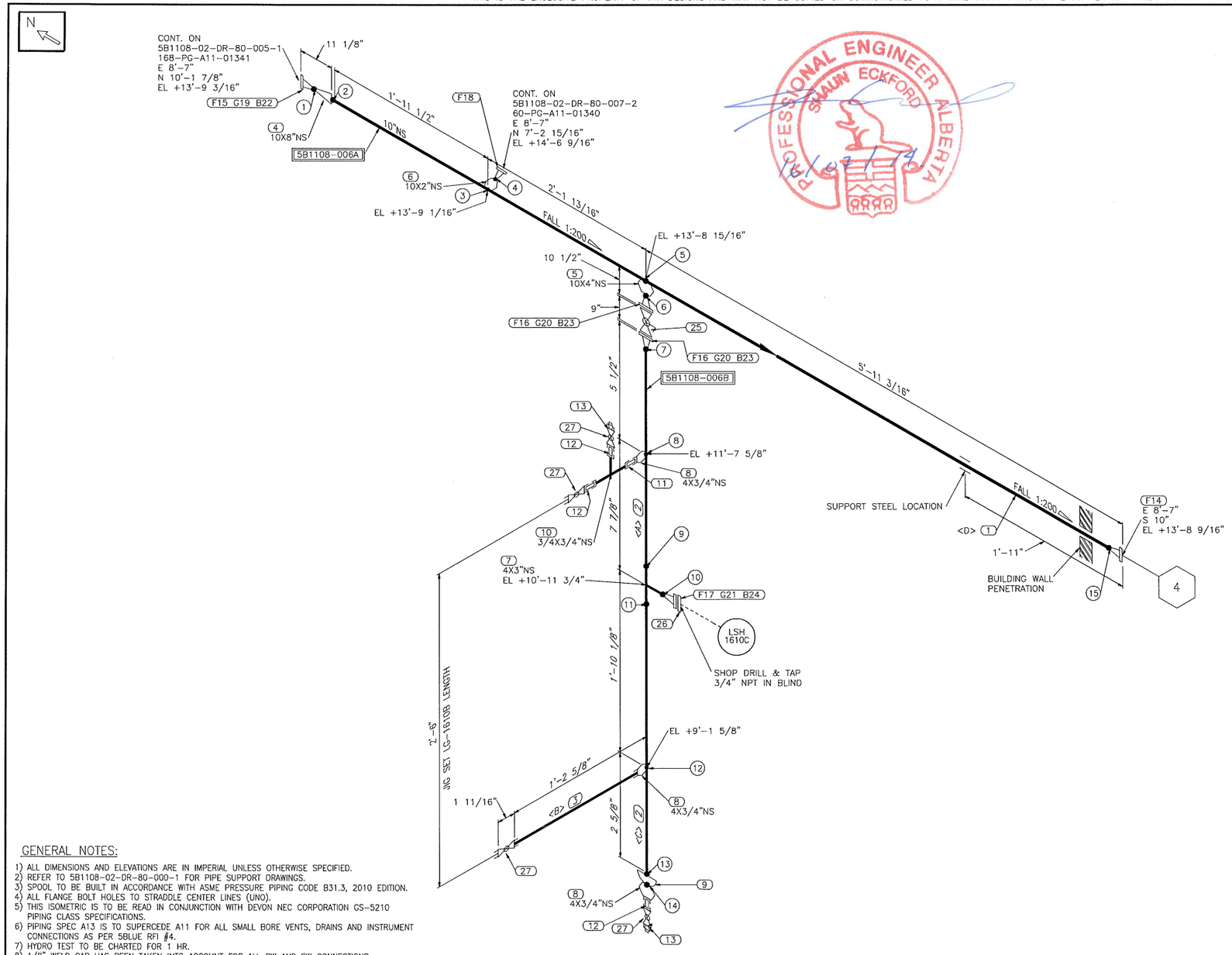

PROFESSIONAL ENGINEER ALBERTA SHAUN ECKFORD 08/10/13

BILL OF MATERIAL

MARK	SIZE (INCH)	DESCRIPTION	QTY	WEIGHT (LBS)
		SHOP MATERIALS		
		PIPE		
1	10	PIPE, SCH STD, ASTM A333 GR6, SMLS, B36.10	9.7'	392.6
2	4	PIPE, SCH STD, ASTM A106B, SMLS, B36.10	2.3'	23.9
3	3/4	PIPE, SCH 160, ASTM A106B, SMLS, B36.10	1.0'	1.5
		FITTINGS		
4	10X8	CON REDUCER, SCH STD, ASTM A234 WPB, B16.9	1	23.2
5	10X4	WELDOLET, SCH STD, ASTM A105N, MSS SP-97	1	6.3
6	10X2	WELDOLET, SCH 80, ASTM A105N, MSS SP-97	1	1.8
7	4X3	RED TEE, SCH STD, ASTM A234 WPB, B16.9	1	15.0
8	4X3/4	THREADOLET, CL3000, ASTM A105N, MSS SP-97	3	1.1
9	4	CAP, SCH STD, ASTM A234 WPB, B16.9	1	2.5
10	3/4X3/4	TEE, CL3000, THRD, ASTM A105N, B16.11	1	1.9
11	3/4	NIPPLE, SCH 160, ASTM A106B, SMLS, B36.10 TBE (6.0000 LG)	1	2.0
12	3/4	NIPPLE, SCH 160, ASTM A106B, SMLS, B36.10 TBE (4.0000 LG)	3	5.9
13	3/4	SOLID ROUND HEAD PLUG, THRD, ASTM A105N, B16.11	2	0.8
		FLANGES		
14	10	FLANGE, CL150, SCH STD, RFWN, ASTM A350 LF2 CL1, B16.5	1	52.0
15	8	FLANGE, CL150, SCH STD, RFWN, ASTM A105N, B16.5	1	39.0
16	4	FLANGE, CL150, SCH STD, RFWN, ASTM A105N, B16.5	2	30.0
17	3	FLANGE, CL150, SCH STD, RFWN, ASTM A105N, B16.5	1	11.3
18	2	FLANGE, CL150, SCH 80, RFWN, ASTM A105N, B16.5	1	6.0
		GASKETS		
19	8	GASKET, CL150, RF, 1/8" THK, 316 SS SPIRAL WOUND, FLEX FILLER CGI, CS CENTERING RING, 316 SS INNER RING, B16.20	1	1.0
20	4	GASKET, CL150, RF, 1/8" THK, 316 SS SPIRAL WOUND, FLEX FILLER CGI, CS CENTERING RING, 316 SS INNER RING, B16.20	2	2.0
21	3	GASKET, CL150, RF, 1/8" THK, 316 SS SPIRAL WOUND, FLEX FILLER CGI, CS CENTERING RING, 316 SS INNER RING, B16.20	1	1.0
		BOLTS		
22	3/4X4 1/4	(8) STUDBOLT c/w 2 HEX NUTS, ASTM A193 GR B7, A194 GR 2H, B16.5	1	1.0
23	5/8X3 3/4	(8) STUDBOLT c/w 2 HEX NUTS, ASTM A193 GR B7, A194 GR 2H, B16.5	2	2.0
24	5/8X3 3/4	(4) STUDBOLT c/w 2 HEX NUTS, ASTM A193 GR B7, A194 GR 2H, B16.5	1	1.0
		VALVES / IN-LINE ITEMS		
25	4	BALL VALVE, CL150, RF, LEVER OP, (BN0106A1)	1	113.0
26	3	HUB BLIND FLANGE, CL150, RF, ASTM A105N, B16.5 (c/w 3/4" NPT DRILL & TAP)	1	9.0
27	3/4	BALL VALVE, CL800, THRD, LEVER OP, (BA8202A)	4	3.1
		PIPE SPOOLS		
		5B1108-006A 5B1108-006B		

CUT PIPE LENGTH

PIECE NO	LENGTH (FT-INS)	N.S. (INS)	REMARKS	END ONE	END TWO	ITEM CODE
<A>	6"	4		BEVEL	BEVEL	29
<B>	11 7/8"	3/4		SCREWED	SCREWED	10
<C>	1'8 1/2"	4		BEVEL	BEVEL	29
<D>	9'8 3/8"	10		BEVEL	BEVEL	36

TOTAL SHOP WEIGHT 750.3
TOTAL FIELD WEIGHT 0.0
TOTAL WEIGHT-THIS DWG 751.3

WELD NO.	SIZE	NOM. THK	WELD TYPE	DESCRIPTION	WELDER ID	DATE	NDE REPORT No.	V.T.
15	10"	SCH STD	BW					
14	3/4"	CL3000	LET					
13	4"	SCH STD	BW					
12	3/4"	CL3000	LET					
11	4"	SCH STD	BW					
10	3"	SCH STD	BW					
9	4"	SCH STD	BW					
8	3/4"	CL3000	LET					
7	4"	SCH STD	BW					
6	4"	SCH STD	BW					
5	4"	SCH STD	LET					
4	2"	SCH 80	BW					
3	2"	SCH 80	LET					
2	10"	SCH STD	BW					
1	8"	SCH STD	BW					

GENERAL NOTES:

1) ALL DIMENSIONS AND ELEVATIONS ARE IN IMPERIAL UNLESS OTHERWISE SPECIFIED.
2) REFER TO 5B1108-02-DR-80-000-1 FOR PIPE SUPPORT DRAWINGS.
3) SPOOL TO BE BUILT IN ACCORDANCE WITH ASME PRESSURE PIPING CODE B31.3, 2010 EDITION.
4) ALL FLANGE BOLT HOLES TO STRADDLE CENTER LINES (UNO).
5) THIS ISOMETRIC IS TO BE READ IN CONJUNCTION WITH DEVON NEC CORPORATION GS-5210 PIPING CLASS SPECIFICATIONS.
6) PIPING SPEC A13 IS TO SUPERCEDE A11 FOR ALL SMALL BORE VENTS, DRAINS AND INSTRUMENT CONNECTIONS AS PER 5BLUE RFI #4.
7) HYDRO TEST TO BE CHARTED FOR 1 HR.
8) 1/8" WELD GAP HAS BEEN TAKEN INTO ACCOUNT FOR ALL BW AND SW CONNECTIONS.
9) SHOP TO VERIFY ALL DIMENSIONS AND ELEVATIONS AND COORDINATES PRIOR TO FABRICATION.
10) JOINT NON-DESTRUCTIVE EXAMINATION:
ALL JOINT: 20% VISUAL, BW: 10% RT, SW: 5% RT(FIT-UP) + 10% MT, FILLET WELDS: 10% MT.

REV.	D/M/Y	DESCRIPTION	BY	CHK	APP
0	08/10/2013	ISSUED FOR CONSTRUCTION	RR	BB	

LEGEND:
- ○ : WELD NO.
- ⬭ : MARK NO.
- FFW ○ : FIELD FIT WELD
- ✕ : FIELD WELD
- 4 : SPOOL NUMBER
- : PIPE SUPPORT

STD WELD PROC:	5B-102/103	PAINT SYSTEM:	SEE E&IL
L.T. WELD PROC:	5B-102/103	INSULATION:	NA
RATING/SPEC:	CL150/A11	SANDBLAST:	SSPC-SP6
HYDROTEST PSIG:	428	DESIGN TEMP °F:	100
RADIOGRAPHY:	10%	DESIGN PRES PSIG:	285
STRESS RELIEVE:	NO		

5Blue Process Equipment Inc.

INTI DESIGNS

TITLE: DEVON NEC CORPORATION.
FERRIER CENTRAL PROCESSING FACILITY
CENTRAL OIL BATTERY – LIQUID EXTRACTION PLANT (LEP)
PIPING ISOMETRIC
LINE NO. 273-HF-A11-09339

CLIENT DOCUMENT NUMBER	ISOMETRIC NUMBER	REV.
TBD	5B1108-02-DR-80-006-1	0

THIS IS THE EXCLUSIVE PROPERTY OF INTI DESIGNS AND MAY NOT BE COPIED OR COMMUNICATED TO A THIRD PARTY WITHOUT THE WRITTEN AUTHORIZATION OF INTI DESIGNS.

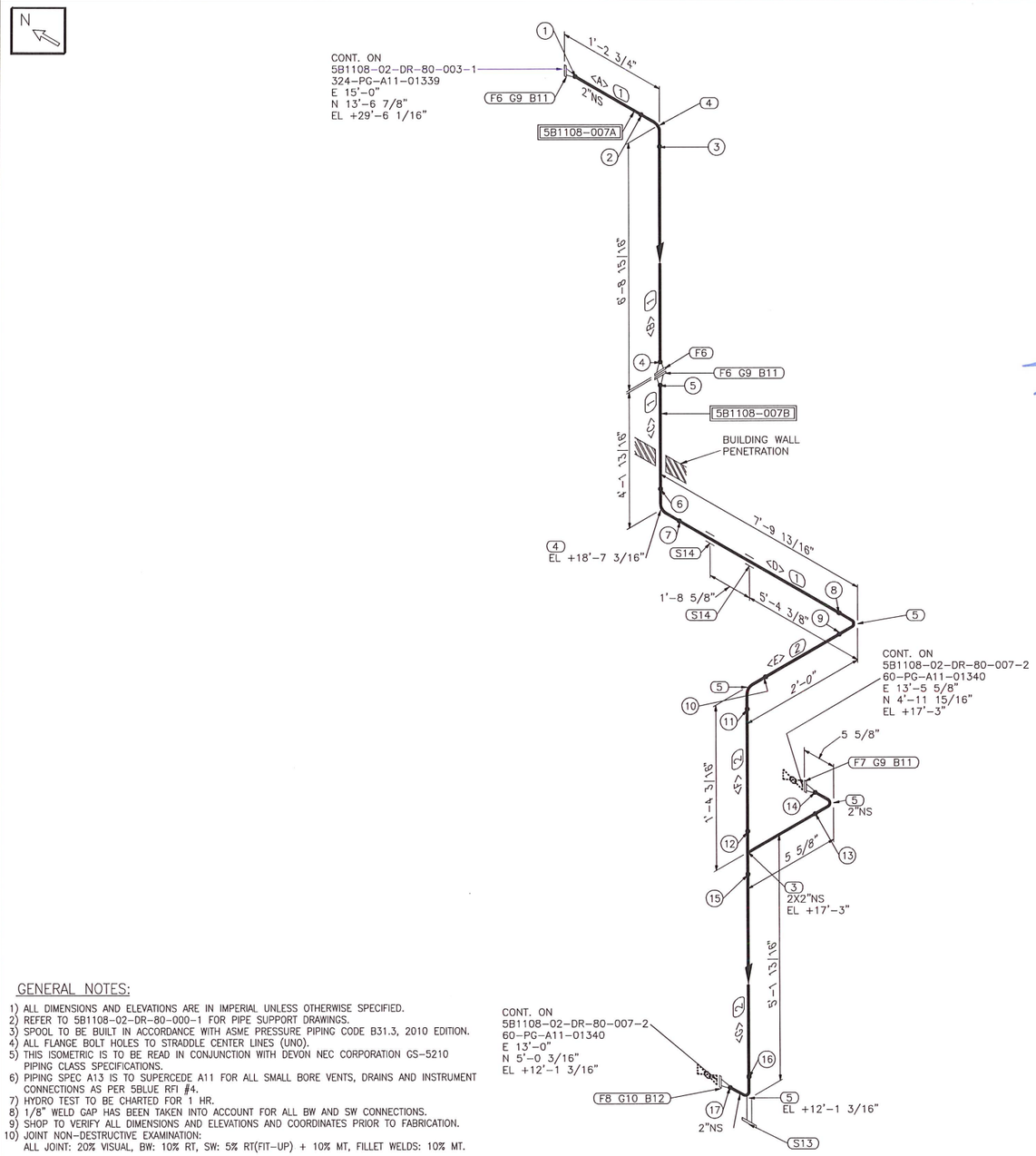

GENERAL NOTES:

1) ALL DIMENSIONS AND ELEVATIONS ARE IN IMPERIAL UNLESS OTHERWISE SPECIFIED.
2) REFER TO 5B1108-02-DR-80-000-1 FOR PIPE SUPPORT DRAWINGS.
3) SPOOL TO BE BUILT IN ACCORDANCE WITH ASME PRESSURE PIPING CODE B31.3, 2010 EDITION.
4) ALL FLANGE BOLT HOLES TO STRADDLE CENTER LINES (UNO).
5) THIS ISOMETRIC IS TO BE READ IN CONJUNCTION WITH DEVON NEC CORPORATION GS-5210 PIPING CLASS SPECIFICATIONS.
6) PIPING SPEC A13 IS TO SUPERCEDE A11 FOR ALL SMALL BORE VENTS, DRAINS AND INSTRUMENT CONNECTIONS AS PER 5BLUE RFI #4.
7) HYDRO TEST TO BE CHARTED FOR 1 HR.
8) 1/8" WELD GAP HAS BEEN TAKEN INTO ACCOUNT FOR ALL BW AND SW CONNECTIONS.
9) SHOP TO VERIFY ALL DIMENSIONS AND ELEVATIONS AND COORDINATES PRIOR TO FABRICATION.
10) JOINT NON-DESTRUCTIVE EXAMINATION:
ALL JOINT: 20% VISUAL, BW: 10% RT, SW: 5% RT(FIT-UP) + 10% MT, FILLET WELDS: 10% MT.



BILL OF MATERIAL

MARK	SIZE (INCH)	DESCRIPTION	QTY	WEIGHT (LBS)
		SHOP MATERIALS		
		PIPE		
1	2	PIPE, SCH 80, ASTM A333 GR6, SMLS, B36.10	18.0'	90.3
2	2	PIPE, SCH 80, ASTM A106B, SMLS, B36.10	7.1'	35.3
		FITTINGS		
3	2X2	TEE, SCH 80, ASTM A234 WPB, B16.9	1	3.7
4	2	90 DEG LR ELBOW, SCH 80, ASTM A420 WPL6, B16.9	2	4.4
5	2	90 DEG LR ELBOW, SCH 80, ASTM A234 WPB, B16.9	4	8.8
		FLANGES		
6	2	FLANGE, CL150, SCH 80, RFWN, ASTM A350 LF2 CL1, B16.5	3	18.0
7	2	FLANGE, CL150, SCH 80, RFWN, ASTM A105N, B16.5	1	6.0
8	2	FLANGE, CL300, SCH 80, RFWN, ASTM A105N, B16.5	1	9.0
		GASKETS		
9	2	GASKET, CL150, RF, 1/8" THK, 316 SS SPIRAL WOUND, FLEX FILLER CGI, CS CENTERING RING, 316 SS INNER RING, B16.20	3	3.0
10	2	GASKET, CL300, RF, 1/8" THK, 316 SS SPIRAL WOUND, FLEX FILLER CGI, CS CENTERING RING, 316 SS INNER RING, B16.20	1	1.0
		BOLTS		
11	5/8X3 1/4	(4) STUDBOLT c/w 2 HEX NUTS, ASTM A193 GR B7, A194 GR 2H, B16.5	3	3.0
12	5/8X3 1/2	(8) STUDBOLT c/w 2 HEX NUTS, ASTM A193 GR B7, A194 GR 2H, B16.5	1	1.0
		SUPPORTS		
13	2	L10-3-2" (L= 2'-1 3/16")	1	24.0
14	2	GU-2"	2	0.6
		PIPE SPOOLS		
		5B1108-007A 5B1108-007B		

CUT PIPE LENGTH

PIECE NO	LENGTH (FT-INS)	N.S. (INS)	REMARKS	END ONE	END TWO	ITEM CODE
<A>	9"	2		BEVEL	BEVEL	46
<B>	6'3 3/16"	2		BEVEL	BEVEL	46
<C>	3'8 1/16"	2		BEVEL	BEVEL	46
<D>	7'3 9/16"	2		BEVEL	BEVEL	46
<E>	1'5 3/4"	2		BEVEL	BEVEL	41
<F>	10 7/16"	2		BEVEL	BEVEL	41
<G>	4'8 1/16"	2		BEVEL	BEVEL	41

TOTAL SHOP WEIGHT 208.0
TOTAL FIELD WEIGHT 0.0
TOTAL WEIGHT-THIS DWG 208.0

WELD NO.	SIZE	NOM. THK	WELD TYPE	DESCRIPTION	WELDER ID	DATE	NDE REPORT No.	V.T.
17	2"	SCH 80	BW					
16	2"	SCH 80	BW					
15	2"	SCH 80	BW					
14	2"	SCH 80	BW					
13	2"	SCH 80	BW					
12	2"	SCH 80	BW					
11	2"	SCH 80	BW					
10	2"	SCH 80	BW					
9	2"	SCH 80	BW					
8	2"	SCH 80	BW					
7	2"	SCH 80	BW					
6	2"	SCH 80	BW					
5	2"	SCH 80	BW					
4	2"	SCH 80	BW					
3	2"	SCH 80	BW					
2	2"	SCH 80	BW					
1	2"	SCH 80	BW					

REV.	D/M/Y	DESCRIPTION	BY	CHK	APP
0	29/08/2013	ISSUED FOR CONSTRUCTION	RR	BB	

LEGEND:
○ : WELD NO.
⬭ : MARK NO.
FFW ○ : FIELD FIT WELD
✕ : FIELD WELD
4 : SPOOL NUMBER
— : PIPE SUPPORT

STD WELD PROC:	5B-102/103	PAINT SYSTEM:	SEE E&IL
L.T. WELD PROC:	5B-102/103	INSULATION:	NA
RATING/SPEC:	CL150/A11	SANDBLAST:	SSPC-SP6
HYDROTEST PSIG:	428	DESIGN TEMP °F:	100
RADIOGRAPHY:	10%	DESIGN PRES PSIG:	285
STRESS RELIEVE:	NO		

5Blue Process Equipment Inc.

INTI DESIGNS

TITLE: DEVON NEC CORPORATION.
FERRIER CENTRAL PROCESSING FACILITY
CENTRAL OIL BATTERY – LIQUID EXTRACTION PLANT (LEP)
PIPING ISOMETRIC
LINE NO. 60-PG-A11-01340

CLIENT DOCUMENT NUMBER	ISOMETRIC NUMBER	REV.
TBD	5B1108-02-DR-80-007-1	0

THIS IS THE EXCLUSIVE PROPERTY OF INTI DESIGNS AND MAY NOT BE COPIED OR COMMUNICATED TO A THIRD PARTY WITHOUT THE WRITTEN AUTHORIZATION OF INTI DESIGNS.

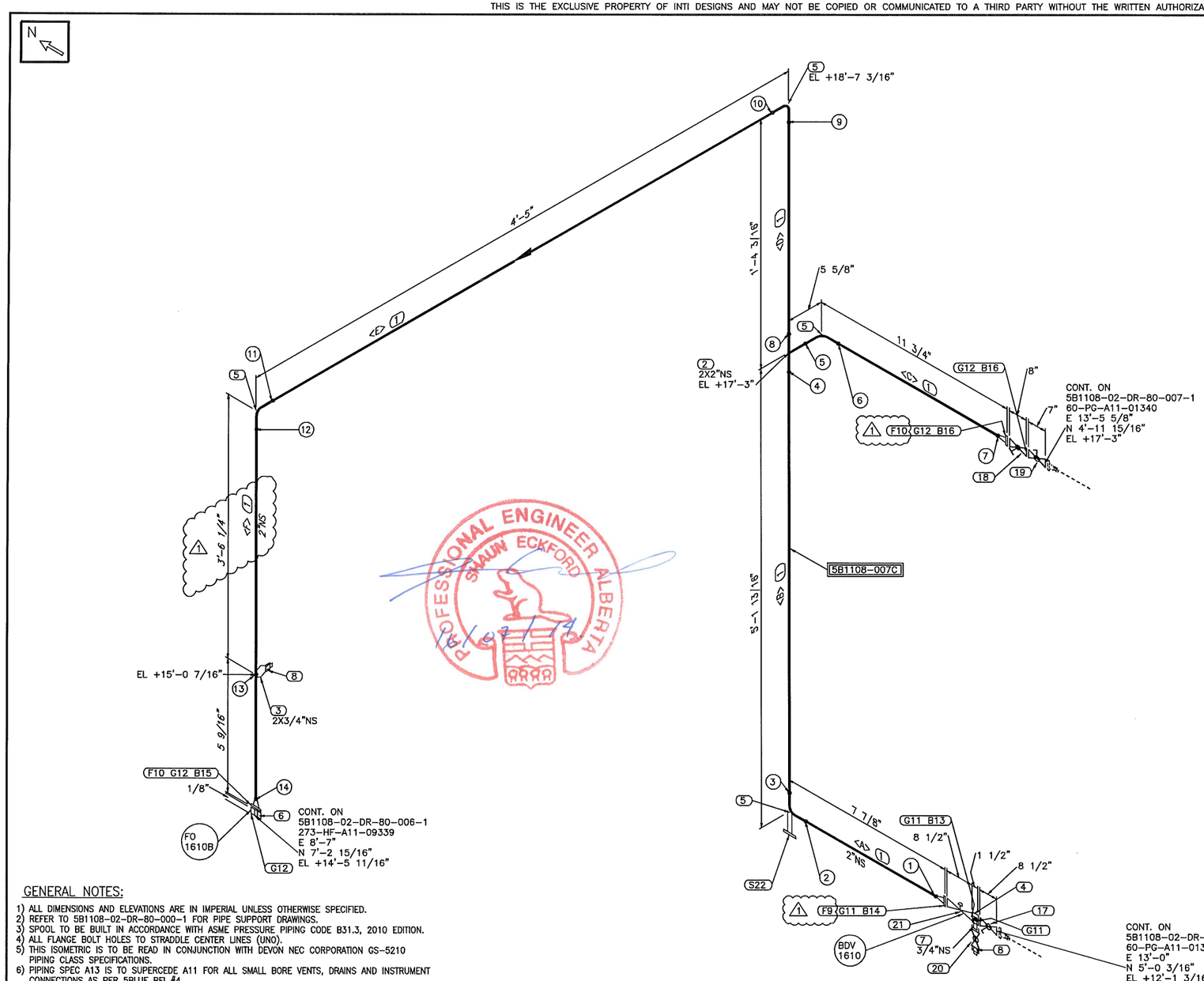

PROFESSIONAL ENGINEER ALBERTA SHAWN ECKFORD 16/02/14

GENERAL NOTES:

1) ALL DIMENSIONS AND ELEVATIONS ARE IN IMPERIAL UNLESS OTHERWISE SPECIFIED.
2) REFER TO 5B1108-02-DR-80-000-1 FOR PIPE SUPPORT DRAWINGS.
3) SPOOL TO BE BUILT IN ACCORDANCE WITH ASME PRESSURE PIPING CODE B31.3, 2010 EDITION.
4) ALL FLANGE BOLT HOLES TO STRADDLE CENTER LINES (UNO).
5) THIS ISOMETRIC IS TO BE READ IN CONJUNCTION WITH DEVON NEC CORPORATION GS-5210 PIPING CLASS SPECIFICATIONS.
6) PIPING SPEC A13 IS TO SUPERCEDE A11 FOR ALL SMALL BORE VENTS, DRAINS AND INSTRUMENT CONNECTIONS AS PER 5BLUE RFI #4.
7) HYDRO TEST TO BE CHARTED FOR 1 HR.
8) 1/8" WELD GAP HAS BEEN TAKEN INTO ACCOUNT FOR ALL BW AND SW CONNECTIONS.
9) SHOP TO VERIFY ALL DIMENSIONS AND ELEVATIONS AND COORDINATES PRIOR TO FABRICATION.
10) JOINT NON-DESTRUCTIVE EXAMINATION:
ALL JOINT: 20% VISUAL, BW: 10% RT, SW: 5% RT(FIT-UP) + 10% MT, FILLET WELDS: 10% MT.

BILL OF MATERIAL

MARK	SIZE (INCH)	DESCRIPTION	QTY	WEIGHT (LBS)
		SHOP MATERIALS		
		PIPE		
1	2	PIPE, SCH 80, ASTM A106B, SMLS, B36.10	13.8'	68.9
		FITTINGS		
2	2X2	TEE, SCH 80, ASTM A234 WPB, B16.9	1	3.7
3	2X3/4	THREADOLET, CL3000, ASTM A105N, MSS SP-97	1	0.4
4	2	BLEED RING, CL300, RF, C/W (1) 3/4" THRD CONN ASTM A516 70N	1	1.0
5	2	90 DEG LR ELBOW, SCH 80, ASTM A234 WPB, B16.9	4	8.8
6	2	FLOW ORIFICE, CL150, RF (FO-1610B)	1	1.0
7	3/4	NIPPLE, SCH 160, ASTM A106B, SMLS, B36.10 TBE (4.0000 LG)	1	2.0
8	3/4	SOLID ROUND HEAD PLUG, THRD, ASTM A105N, B16.11	2	0.8
		FLANGES		
9	2	FLANGE, CL300, SCH 80, RFWN, ASTM A105N, B16.5	1	9.0
10	2	FLANGE, CL150, SCH 80, RFWN, ASTM A105N, B16.5	2	12.0
		GASKETS		
11	2	GASKET, CL300, RF, 1/8" THK, 316 SS SPIRAL WOUND, FLEX FILLER CGI, CS CENTERING RING, 316 SS INNER RING, B16.20	3	3.0
12	2	GASKET, CL150, RF, 1/8" THK, 316 SS SPIRAL WOUND, FLEX FILLER CGI, CS CENTERING RING, 316 SS INNER RING, B16.20	4	4.0
		BOLTS		
13	5/8X5 1/4	(8) STUDBOLT c/w 2 HEX NUTS, ASTM A193 GR B7, A194 GR 2H, B16.5	1	1.0
14	5/8X3 1/2	(8) STUDBOLT c/w 2 HEX NUTS, ASTM A193 GR B7, A194 GR 2H, B16.5	1	1.0
15	5/8X3 1/2	(4) STUDBOLT c/w 2 HEX NUTS, ASTM A193 GR B7, A194 GR 2H, B16.5	1	1.0
16	5/8X3 1/4	(4) STUDBOLT c/w 2 HEX NUTS, ASTM A193 GR B7, A194 GR 2H, B16.5	2	2.0
		VALVES / IN-LINE ITEMS		
17	2	BALL VALVE, CL300, RF, LEVER OP, (BA0306A1)	1	38.0
18	2	GLOBE VALVE, CL150, RF, HW OP, (LA0106A1)	1	47.0
19	2	BALL VALVE, CL150, RF, LEVER OP, (BA0106A1)	1	33.0
20	3/4	BALL VALVE, CL800, THRD, LEVER OP, (BA8202A)	1	0.8
		INSTRUMENTS		
21	2	CONTROL VALVE, CL300, RF TAG (BDV-1610)	1	61.0
		SUPPORTS		
22	2	L10-3-2" (L= 2'-1 3/16")	1	24.1
		PIPE SPOOLS		
		5B1108-007C		

CUT PIPE LENGTH

PIECE NO	LENGTH (FT-INS)	N.S. (INS)	REMARKS	END ONE	END TWO	ITEM CODE
<A>	1 7/8"	2		BEVEL	BEVEL	41
<B>	4'8 1/16"	2		BEVEL	BEVEL	41
<C>	6"	2		BEVEL	BEVEL	41
<D>	10 7/16"	2		BEVEL	BEVEL	41
<E>	3'10 3/4"	2		BEVEL	BEVEL	41
1 <F>	3'7"	2		BEVEL	BEVEL	41

TOTAL SHOP WEIGHT 323.5
TOTAL FIELD WEIGHT 0.0
TOTAL WEIGHT-THIS DWG 323.5

WELD NO.	SIZE	NOM. THK	WELD TYPE	DESCRIPTION	WELDER ID	DATE	NDE REPORT No.	V.T.
14	2"	SCH 80	BW					
13	3/4"	CL3000	LET					
12	2"	SCH 80	BW					
11	2"	SCH 80	BW					
10	2"	SCH 80	BW					
9	2"	SCH 80	BW					
8	2"	SCH 80	BW					
7	2"	SCH 80	BW					
6	2"	SCH 80	BW					
5	2"	SCH 80	BW					
4	2"	SCH 80	BW					
3	2"	SCH 80	BW					
2	2"	SCH 80	BW					
1	2"	SCH 80	BW					

REV.	D/M/Y	DESCRIPTION	BY	CHK	APP
1	24/10/2013	REVISED AS NOTED	RR	BB	
0	29/08/2013	ISSUED FOR CONSTRUCTION	RR	BB	

LEGEND:
○ : WELD NO.
▭ : MARK NO.
FFW ○ : FIELD FIT WELD
✕ : FIELD WELD
4 : SPOOL NUMBER
: PIPE SUPPORT

STD WELD PROC:	5B-102/103	PAINT SYSTEM:	SEE E&IL
L.T. WELD PROC:	5B-102/103	INSULATION:	NA
RATING/SPEC:	CL150/A11	SANDBLAST:	SSPC-SP6
HYDROTEST PSIG:	428	DESIGN TEMP °F:	100
RADIOGRAPHY:	10%	DESIGN PRES PSIG:	285
STRESS RELIEVE:	NO		

5Blue Process Equipment Inc.

INTI DESIGNS

TITLE: DEVON NEC CORPORATION.
FERRIER CENTRAL PROCESSING FACILITY
CENTRAL OIL BATTERY – LIQUID EXTRACTION PLANT (LEP)
PIPING ISOMETRIC
LINE NO. 60-PG-A11-01340

CLIENT DOCUMENT NUMBER	ISOMETRIC NUMBER	REV.
TBD	5B1108-02-DR-80-007-2	1

THIS IS THE EXCLUSIVE PROPERTY OF INTI DESIGNS AND MAY NOT BE COPIED OR COMMUNICATED TO A THIRD PARTY WITHOUT THE WRITTEN AUTHORIZATION OF INTI DESIGNS.

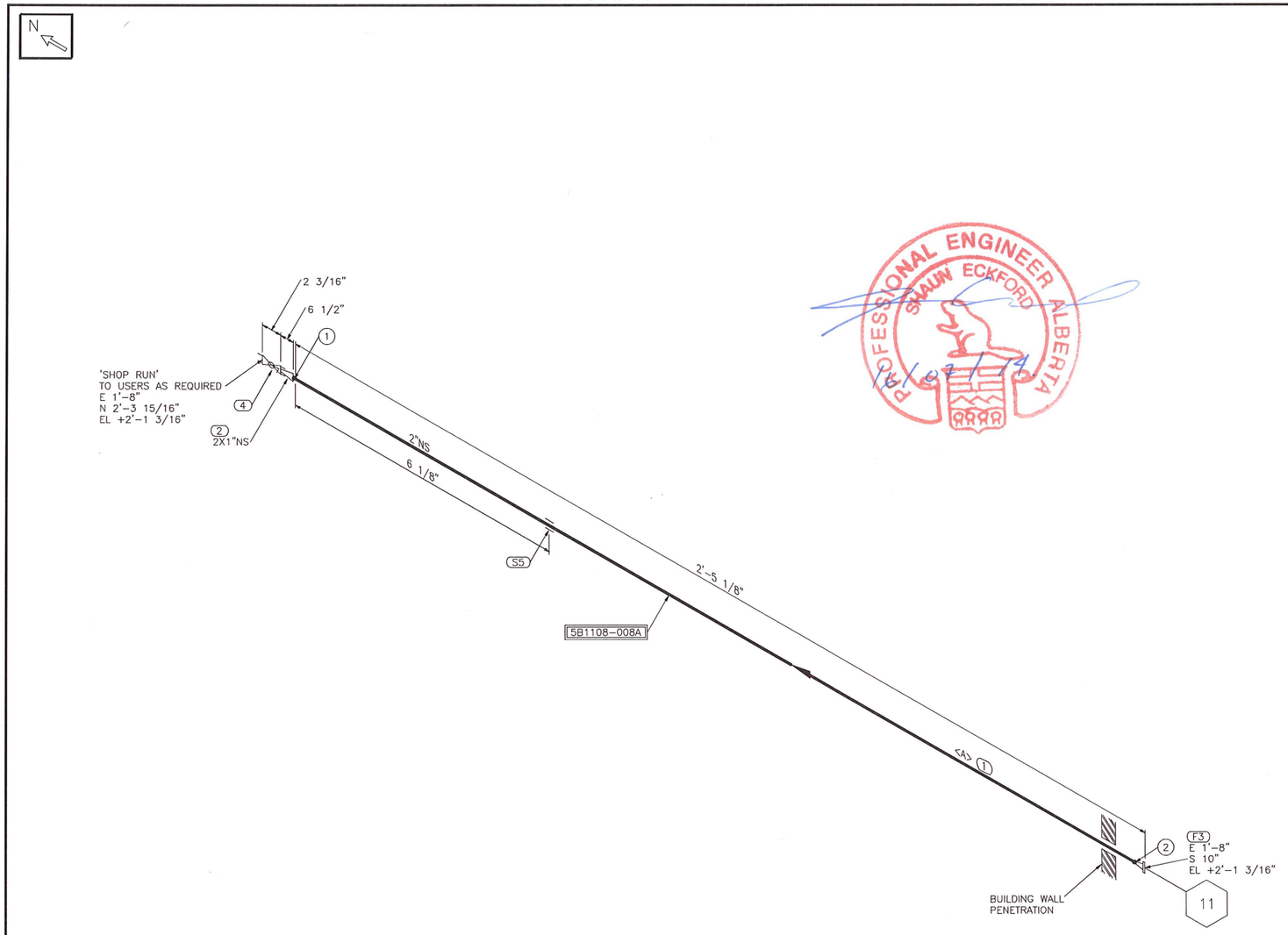

PROFESSIONAL ENGINEER ALBERTA
SHAUN ECKFORD
16/07/14

BILL OF MATERIAL

MARK	SIZE (INCH)	DESCRIPTION	QTY	WEIGHT (LBS)
		SHOP MATERIALS		
		PIPE		
1	2	PIPE, SCH 80, ASTM A333 GR6, SMLS, B36.10	2.3'	11.1
		FITTINGS		
2	2X1	CONC SWAGE, SCH 80x160, ASTM A420 WPL6, SMLS, MSS SP-95 BLE-TSE	1	2.0
		FLANGES		
3	2	FLANGE, CL150, SCH 80, RFWN, ASTM A350 LF2 CL1, B16.5	1	6.0
		VALVES / IN-LINE ITEMS		
4	1	BALL VALVE, CL800, THRD, LEVER OP, (BA8202A)	1	1.4
		SUPPORTS		
5	2	GU-2" & SA-4	1	0.2
		PIPE SPOOLS		
		5B1108-008A		

CUT PIPE LENGTH

PIECE NO	LENGTH (FT-INS)	N.S. (INS)	REMARKS	END ONE	END TWO	ITEM CODE
<A>	2'2 1/2"	2		BEVEL	BEVEL	5

TOTAL SHOP WEIGHT 20.6
TOTAL FIELD WEIGHT 0.0
TOTAL WEIGHT-THIS DWG 20.6

WELD NO.	SIZE	NOM. THK	WELD TYPE	DESCRIPTION	WELDER ID	DATE	NDE REPORT No.	V.T.
2	2"	SCH 80	BW					
1	2"	SCH 80	BW					

GENERAL NOTES:

1) ALL DIMENSIONS AND ELEVATIONS ARE IN IMPERIAL UNLESS OTHERWISE SPECIFIED.
2) REFER TO 5B1108-02-DR-80-000-1 FOR PIPE SUPPORT DRAWINGS.
3) SPOOL TO BE BUILT IN ACCORDANCE WITH ASME PRESSURE PIPING CODE B31.3, 2010 EDITION.
4) ALL FLANGE BOLT HOLES TO STRADDLE CENTER LINES (UNO).
5) THIS ISOMETRIC IS TO BE READ IN CONJUNCTION WITH DEVON NEC CORPORATION GS-5210 PIPING CLASS SPECIFICATIONS.
6) PIPING SPEC A13 IS TO SUPERCEDE A11 FOR ALL SMALL BORE VENTS, DRAINS AND INSTRUMENT CONNECTIONS AS PER 5BLUE RFI #4.
7) HYDRO TEST TO BE CHARTED FOR 1 HR.
8) 1/8" WELD GAP HAS BEEN TAKEN INTO ACCOUNT FOR ALL BW AND SW CONNECTIONS.
9) SHOP TO VERIFY ALL DIMENSIONS AND ELEVATIONS AND COORDINATES PRIOR TO FABRICATION.
10) JOINT NON-DESTRUCTIVE EXAMINATION:
ALL JOINT: 20% VISUAL, BW: 10% RT, SW: 5% RT(FIT-UP) + 10% MT, FILLET WELDS: 10% MT.

REV.	D/M/Y	DESCRIPTION	BY	CHK	APP
0	29/08/2013	ISSUED FOR CONSTRUCTION	RR	BB	

LEGEND:
- ○ : WELD NO.
- ⬭ : MARK NO.
- FFW ○ : FIELD FIT WELD
- ✕ : FIELD WELD
- 4 : SPOOL NUMBER
- ═ : PIPE SUPPORT

STD WELD PROC:	5B-102/103	PAINT SYSTEM:	SEE E&IL
L.T. WELD PROC:	5B-102/103	INSULATION:	NA
RATING/SPEC:	CL150/AL11	SANDBLAST:	SSPC-SP6
HYDROTEST PSIG:	428	DESIGN TEMP °F:	100
RADIOGRAPHY:	10%	DESIGN PRES PSIG:	285
STRESS RELIEVE:	NO		

5Blue Process Equipment Inc.

INTI DESIGNS

TITLE: DEVON NEC CORPORATION.
FERRIER CENTRAL PROCESSING FACILITY
CENTRAL OIL BATTERY - LIQUID EXTRACTION PLANT (LEP)
PIPING ISOMETRIC
LINE NO. 60-FG-AL11-20329

CLIENT DOCUMENT NUMBER	ISOMETRIC NUMBER	REV.
TBD	5B1108-02-DR-80-008-1	0

THIS IS THE EXCLUSIVE PROPERTY OF INTI DESIGNS AND MAY NOT BE COPIED OR COMMUNICATED TO A THIRD PARTY WITHOUT THE WRITTEN AUTHORIZATION OF INTI DESIGNS.

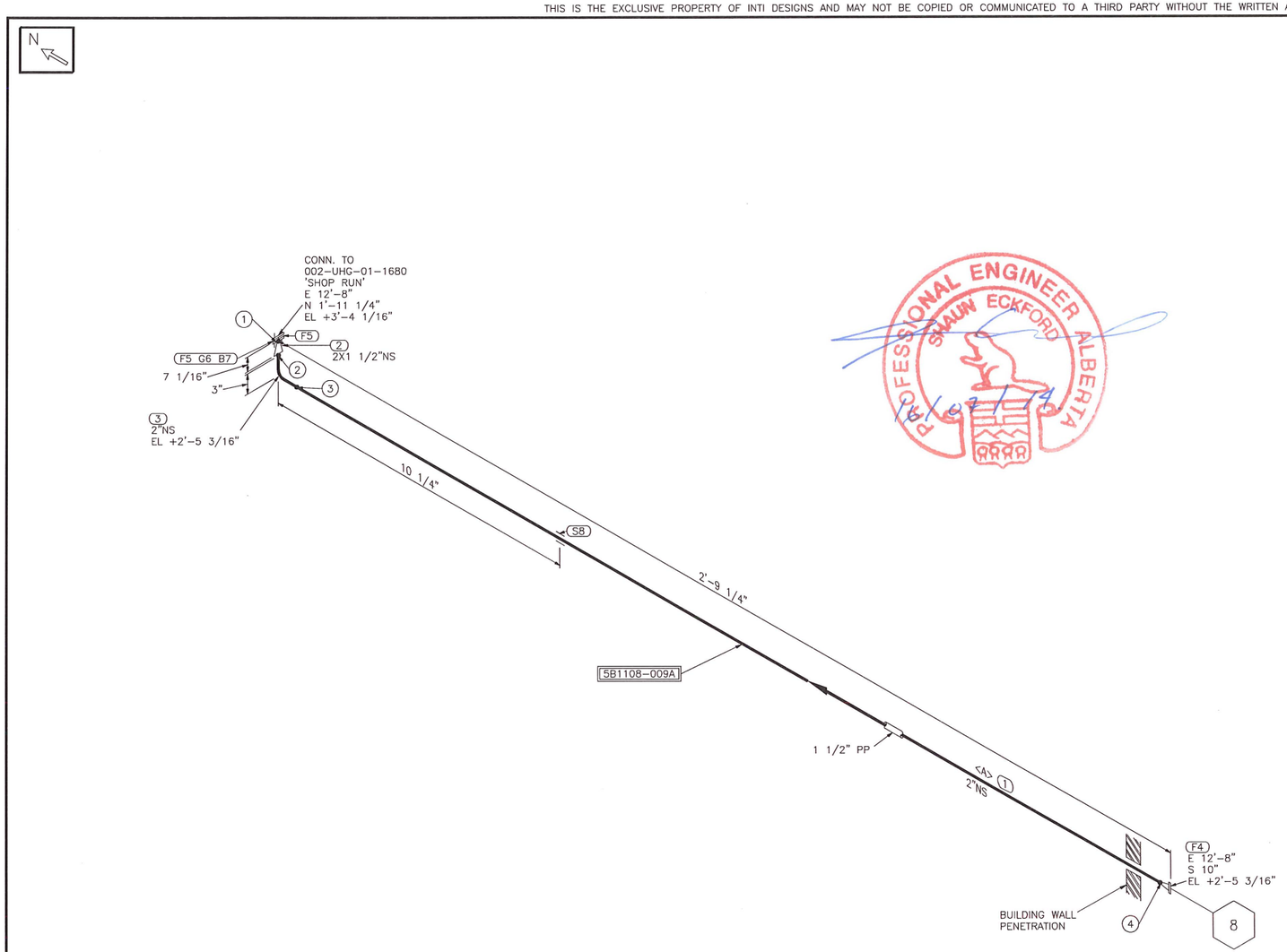

PROFESSIONAL ENGINEER ALBERTA SHAUN ECKFORD 18/09/13

BILL OF MATERIAL

MARK	SIZE (INCH)	DESCRIPTION	QTY	WEIGHT (LBS)
		SHOP MATERIALS		
		PIPE		
1	2	PIPE, SCH 80, ASTM A333 GR6, SMLS, B36.10	2.2'	11.0
		FITTINGS		
2	2X1 1/2	CONC SWAGE, SCH 80, ASTM A420 WPL6, SMLS, MSS SP-95 BLE-PSE	1	2.0
3	2	90 DEG LR ELBOW, SCH 80, ASTM A420 WPL6, B16.9	1	2.2
		FLANGES		
4	2	FLANGE, CL300, SCH 80, RFWN, ASTM A350 LF2 CL1, B16.5	1	9.0
5	1 1/2	FLANGE, CL300, SCH 80, RFSW, ASTM A350 LF2 CL1, B16.5	2	12.0
		GASKETS		
6	1 1/2	GASKET, CL300, RF, 1/8" THK, 316 SS SPIRAL WOUND, FLEX FILLER CGI, CS CENTERING RING, 316 SS INNER RING, B16.20	1	1.0
		BOLTS		
7	3/4X3 3/4	(4) STUDBOLT c/w 2 HEX NUTS, ASTM A193 GR B7M, A194 GR 2HM, B16.5	1	1.0
		SUPPORTS		
8	2	S8-2-A-2" & SG-5 & SA-6	1	13.5
		PIPE SPOOLS		
		5B1108-009A		

CUT PIPE LENGTH

PIECE NO	LENGTH (FT-INS)	N.S. (INS)	REMARKS	END ONE	END TWO	ITEM CODE
<A>	2'3 1/4"	2		BEVEL	BEVEL	7

TOTAL SHOP WEIGHT 51.6
TOTAL FIELD WEIGHT 0.0
TOTAL WEIGHT-THIS DWG 51.6

WELD NO.	SIZE	NOM. THK	WELD TYPE	DESCRIPTION	WELDER ID	DATE	NDE REPORT No.	V.T.
4	2"	SCH 80	BW					
3	2"	SCH 80	BW					
2	2"	SCH 80	BW					
1	1 1/2"	SCH 80	SW					

GENERAL NOTES:

1) ALL DIMENSIONS AND ELEVATIONS ARE IN IMPERIAL UNLESS OTHERWISE SPECIFIED.
2) REFER TO 5B1108-02-DR-80-000-1 FOR PIPE SUPPORT DRAWINGS.
3) SPOOL TO BE BUILT IN ACCORDANCE WITH ASME PRESSURE PIPING CODE B31.3, 2010 EDITION.
4) ALL FLANGE BOLT HOLES TO STRADDLE CENTER LINES (UNO).
5) THIS ISOMETRIC IS TO BE READ IN CONJUNCTION WITH DEVON NEC CORPORATION GS-5210 PIPING CLASS SPECIFICATIONS.
6) PIPING SPEC A13 IS TO SUPERCEDE A11 FOR ALL SMALL BORE VENTS, DRAINS AND INSTRUMENT CONNECTIONS AS PER 5BLUE RFI #4.
7) HYDRO TEST TO BE CHARTED FOR 1 HR.
8) 1/8" WELD GAP HAS BEEN TAKEN INTO ACCOUNT FOR ALL BW AND SW CONNECTIONS.
9) SHOP TO VERIFY ALL DIMENSIONS AND ELEVATIONS AND COORDINATES PRIOR TO FABRICATION.
10) JOINT NON-DESTRUCTIVE EXAMINATION:
ALL JOINT: 20% VISUAL, BW: 10% RT, SW: 5% RT(FIT-UP) + 10% MT, FILLET WELDS: 10% MT.

REV.	D/M/Y	DESCRIPTION	BY	CHK	APP
0	29/08/2013	ISSUED FOR CONSTRUCTION	RR	BB	

LEGEND:
- ○ : WELD NO.
- ⬭ : MARK NO.
- FFW ○ : FIELD FIT WELD
- ⊠ : FIELD WELD
- [4] : SPOOL NUMBER
- ⎯⎯ : PIPE SUPPORT

STD WELD PROC:	5B-102/103	PAINT SYSTEM:	SEE E&IL
L.T. WELD PROC:	5B-102/103	INSULATION:	1 1/2" PP
RATING/SPEC:	CL150/A11a	SANDBLAST:	SSPC-SP6
HYDROTEST PSIG:	428	DESIGN TEMP °F:	100
RADIOGRAPHY:	10%	DESIGN PRES PSIG:	285
STRESS RELIEVE:	NO		

5Blue Process Equipment Inc.

INTI DESIGNS

TITLE: DEVON NEC CORPORATION.
FERRIER CENTRAL PROCESSING FACILITY
CENTRAL OIL BATTERY – LIQUID EXTRACTION PLANT (LEP)
PIPING ISOMETRIC
LINE NO. 60-UHMS-A11a-21368

CLIENT DOCUMENT NUMBER	ISOMETRIC NUMBER	REV.
TBD	5B1108-02-DR-80-009-1	0

THIS IS THE EXCLUSIVE PROPERTY OF INTI DESIGNS AND MAY NOT BE COPIED OR COMMUNICATED TO A THIRD PARTY WITHOUT THE WRITTEN AUTHORIZATION OF INTI DESIGNS.

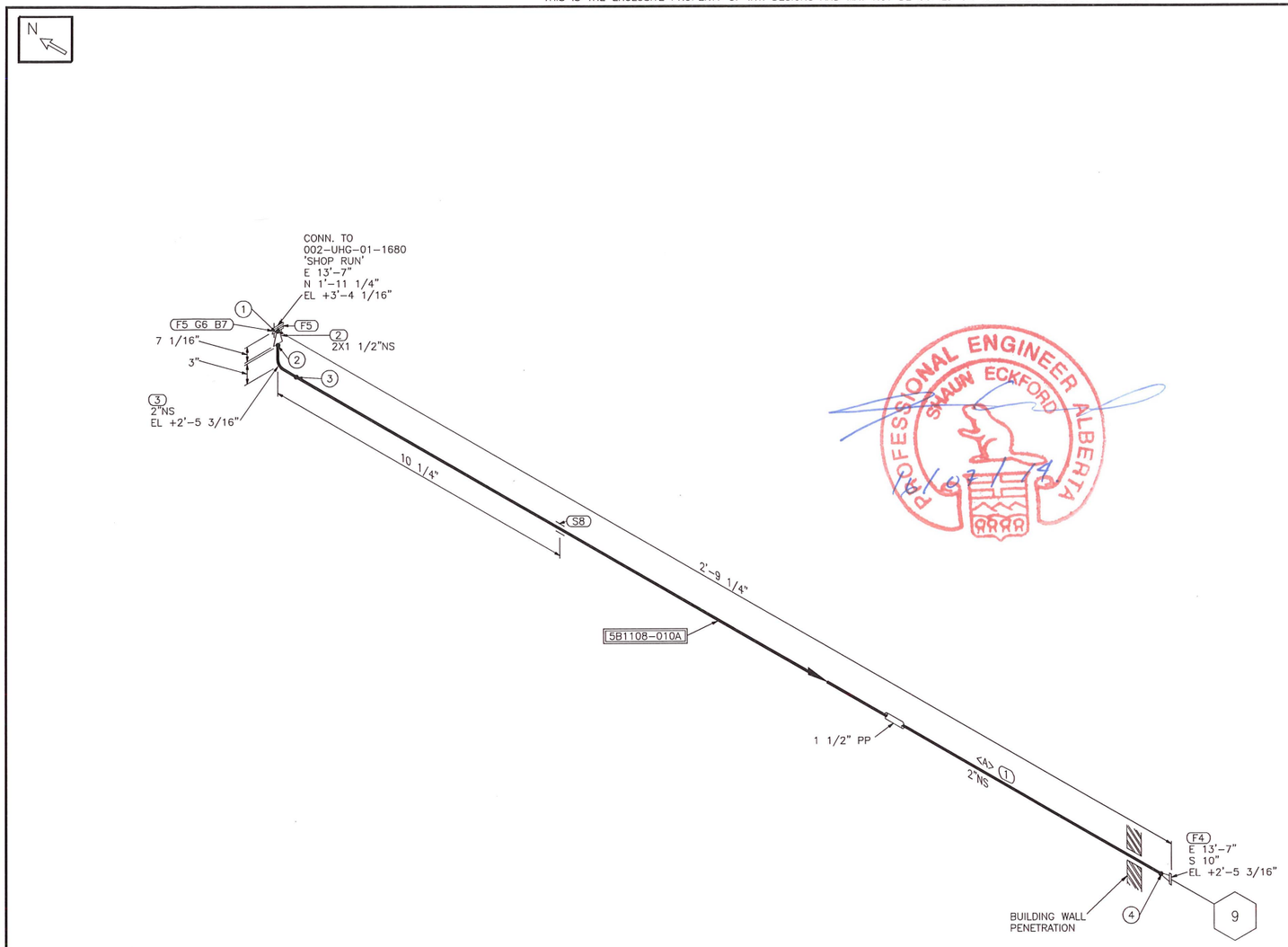

BILL OF MATERIAL

MARK	SIZE (INCH)	DESCRIPTION	QTY	WEIGHT (LBS)
		SHOP MATERIALS		
		PIPE		
1	2	PIPE, SCH 80, ASTM A333 GR6, SMLS, B36.10	2.2'	11.0
		FITTINGS		
2	2X1 1/2	CONC SWAGE, SCH 80, ASTM A420 WPL6, SMLS, MSS SP-95 BLE-PSE	1	2.0
3	2	90 DEG LR ELBOW, SCH 80, ASTM A420 WPL6, B16.9	1	2.2
		FLANGES		
4	2	FLANGE, CL300, SCH 80, RFWN, ASTM A350 LF2 CL1, B16.5	1	9.0
5	1 1/2	FLANGE, CL300, SCH 80, RFSW, ASTM A350 LF2 CL1, B16.5	2	12.0
		GASKETS		
6	1 1/2	GASKET, CL300, RF, 1/8" THK, 316 SS SPIRAL WOUND, FLEX FILLER CGI, CS CENTERING RING, 316 SS INNER RING, B16.20	1	1.0
		BOLTS		
7	3/4X3 3/4	(4) STUDBOLT c/w 2 HEX NUTS, ASTM A193 GR B7M, A194 GR 2HM, B16.5	1	1.0
		SUPPORTS		
8	2	S8-2-A-2" & SG-5 & SA-6	1	13.5
		PIPE SPOOLS		
		5B1108-010A		

CUT PIPE LENGTH

PIECE NO	LENGTH (FT-INS)	N.S. (INS)	REMARKS	END ONE	END TWO	ITEM CODE
<A>	2'3 1/4"	2		BEVEL	BEVEL	8

TOTAL SHOP WEIGHT 51.6
TOTAL FIELD WEIGHT 0.0
TOTAL WEIGHT-THIS DWG 51.6

WELD NO.	SIZE	NOM. THK	WELD TYPE	DESCRIPTION	WELDER ID	DATE	NDE REPORT No.	V.T.
4	2"	SCH 80	BW					
3	2"	SCH 80	BW					
2	2"	SCH 80	BW					
1	1 1/2"	SCH 80	SW					

GENERAL NOTES:

1) ALL DIMENSIONS AND ELEVATIONS ARE IN IMPERIAL UNLESS OTHERWISE SPECIFIED.
2) REFER TO 5B1108-02-DR-80-000-1 FOR PIPE SUPPORT DRAWINGS.
3) SPOOL TO BE BUILT IN ACCORDANCE WITH ASME PRESSURE PIPING CODE B31.3, 2010 EDITION.
4) ALL FLANGE BOLT HOLES TO STRADDLE CENTER LINES (UNO).
5) THIS ISOMETRIC IS TO BE READ IN CONJUNCTION WITH DEVON NEC CORPORATION GS-5210 PIPING CLASS SPECIFICATIONS.
6) PIPING SPEC A13 IS TO SUPERCEDE A11 FOR ALL SMALL BORE VENTS, DRAINS AND INSTRUMENT CONNECTIONS AS PER 5BLUE RFI #4.
7) HYDRO TEST TO BE CHARTED FOR 1 HR.
8) 1/8" WELD GAP HAS BEEN TAKEN INTO ACCOUNT FOR ALL BW AND SW CONNECTIONS.
9) SHOP TO VERIFY ALL DIMENSIONS AND ELEVATIONS AND COORDINATES PRIOR TO FABRICATION.
10) JOINT NON-DESTRUCTIVE EXAMINATION:
ALL JOINT: 20% VISUAL, BW: 10% RT, SW: 5% RT(FIT-UP) + 10% MT, FILLET WELDS: 10% MT.

REV.	D/M/Y	DESCRIPTION	BY	CHK	APP
0	29/08/2013	ISSUED FOR CONSTRUCTION	RR	BB	

LEGEND:
- ○ : WELD NO.
- ⬭ : MARK NO.
- FFW ○ : FIELD FIT WELD
- ✕ : FIELD WELD
- 4 : SPOOL NUMBER
- : PIPE SUPPORT

STD WELD PROC:	5B-102/103	PAINT SYSTEM:	SEE E&IL
L.T. WELD PROC:	5B-102/103	INSULATION:	1 1/2" PP
RATING/SPEC:	CL150/A11a	SANDBLAST:	SSPC-SP6
HYDROTEST PSIG:	428	DESIGN TEMP °F:	100
RADIOGRAPHY:	10%	DESIGN PRES PSIG:	285
STRESS RELIEVE:	NO		

5Blue Process Equipment Inc.

INTI DESIGNS

TITLE: DEVON NEC CORPORATION.
FERRIER CENTRAL PROCESSING FACILITY
CENTRAL OIL BATTERY - LIQUID EXTRACTION PLANT (LEP)
PIPING ISOMETRIC
LINE NO. 60-UMHR-A11a-21382

CLIENT DOCUMENT NUMBER	ISOMETRIC NUMBER	REV.
TBD	5B1108-02-DR-80-010-1	0

THIS IS THE EXCLUSIVE PROPERTY OF INTI DESIGNS AND MAY NOT BE COPIED OR COMMUNICATED TO A THIRD PARTY WITHOUT THE WRITTEN AUTHORIZATION OF INTI DESIGNS.

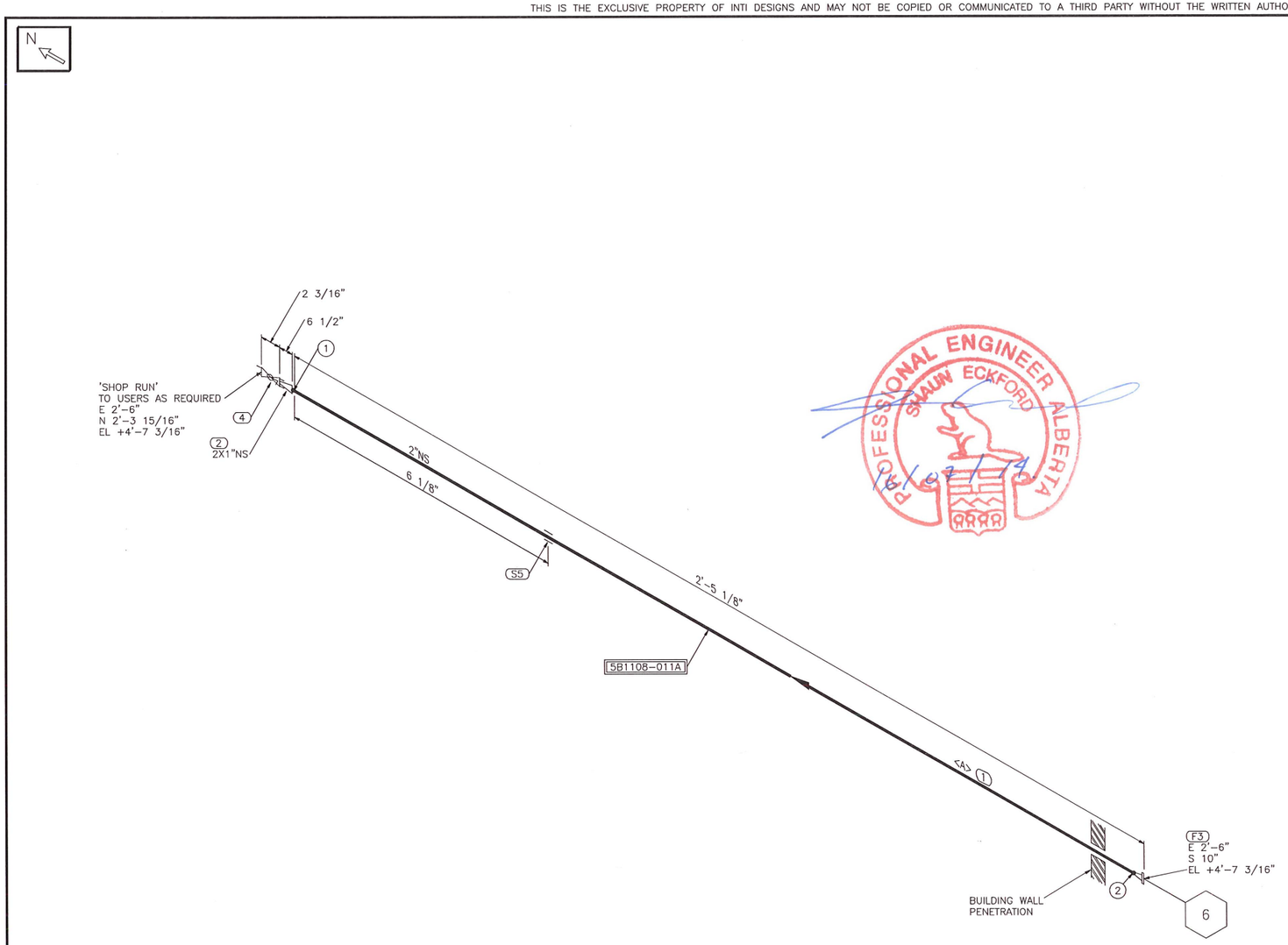

PROFESSIONAL ENGINEER ALBERTA
SHAUN ECKFORD
16/07/13

BILL OF MATERIAL

MARK	SIZE (INCH)	DESCRIPTION	QTY	WEIGHT (LBS)
		SHOP MATERIALS		
		PIPE		
1	2	PIPE, SCH 80, ASTM A333 GR6, SMLS, B36.10	2.3'	11.1
		FITTINGS		
2	2X1	CONC SWAGE, SCH 80x160, ASTM A420 WPL6, SMLS, MSS SP-95 BLE-TSE	1	2.0
		FLANGES		
3	2	FLANGE, CL150, SCH 80, RFWN, ASTM A350 LF2 CL1, B16.5	1	6.0
		VALVES / IN-LINE ITEMS		
4	1	BALL VALVE, CL800, THRD, LEVER OP, (BA8202A)	1	1.4
		SUPPORTS		
5	2	GU-2" & SA-4	1	0.2
		PIPE SPOOLS		
		5B1108-011A		

CUT PIPE LENGTH

PIECE NO	LENGTH (FT-INS)	N.S. (INS)	REMARKS	END ONE	END TWO	ITEM CODE
<A>	2'2 1/2"	2		BEVEL	BEVEL	5

TOTAL SHOP WEIGHT 20.6
TOTAL FIELD WEIGHT 0.0
TOTAL WEIGHT-THIS DWG 20.6

WELD NO.	SIZE	NOM. THK	WELD TYPE	DESCRIPTION	WELDER ID	DATE	NDE REPORT No.	V.T.
2	2"	SCH 80	BW					
1	2"	SCH 80	BW					

GENERAL NOTES:

1) ALL DIMENSIONS AND ELEVATIONS ARE IN IMPERIAL UNLESS OTHERWISE SPECIFIED.
2) REFER TO 5B1108-02-DR-80-000-1 FOR PIPE SUPPORT DRAWINGS.
3) SPOOL TO BE BUILT IN ACCORDANCE WITH ASME PRESSURE PIPING CODE B31.3, 2010 EDITION.
4) ALL FLANGE BOLT HOLES TO STRADDLE CENTER LINES (UNO).
5) THIS ISOMETRIC IS TO BE READ IN CONJUNCTION WITH DEVON NEC CORPORATION GS-5210 PIPING CLASS SPECIFICATIONS.
6) PIPING SPEC A13 IS TO SUPERCEDE A11 FOR ALL SMALL BORE VENTS, DRAINS AND INSTRUMENT CONNECTIONS AS PER 5BLUE RFI #4.
7) HYDRO TEST TO BE CHARTED FOR 1 HR.
8) 1/8" WELD GAP HAS BEEN TAKEN INTO ACCOUNT FOR ALL BW AND SW CONNECTIONS.
9) SHOP TO VERIFY ALL DIMENSIONS AND ELEVATIONS AND COORDINATES PRIOR TO FABRICATION.
10) JOINT NON-DESTRUCTIVE EXAMINATION:
ALL JOINT: 20% VISUAL, BW: 10% RT, SW: 5% RT(FIT-UP) + 10% MT, FILLET WELDS: 10% MT.

REV.	D/M/Y	DESCRIPTION	BY	CHK	APP
0	29/08/2013	ISSUED FOR CONSTRUCTION	RR	BB	

LEGEND:
○ : WELD NO.
▭ : MARK NO.
FFW ○ : FIELD FIT WELD
✕ : FIELD WELD
4 : SPOOL NUMBER
: PIPE SUPPORT

STD WELD PROC:	5B-102/103	PAINT SYSTEM:	SEE E&IL
L.T. WELD PROC:	5B-102/103	INSULATION:	NA
RATING/SPEC:	CL150/AU11	SANDBLAST:	SSPC-SP6
HYDROTEST PSIG:	428	DESIGN TEMP °F:	100
RADIOGRAPHY:	10%	DESIGN PRES PSIG:	285
STRESS RELIEVE:	NO		

5Blue Process Equipment Inc.

INTI DESIGNS

TITLE: DEVON NEC CORPORATION.
FERRIER CENTRAL PROCESSING FACILITY
CENTRAL OIL BATTERY - LIQUID EXTRACTION PLANT (LEP)
PIPING ISOMETRIC
LINE NO. 60-UA-AU11-22305

CLIENT DOCUMENT NUMBER	ISOMETRIC NUMBER	REV.
TBD	5B1108-02-DR-80-011-1	0

THIS IS THE EXCLUSIVE PROPERTY OF INTI DESIGNS AND MAY NOT BE COPIED OR COMMUNICATED TO A THIRD PARTY WITHOUT THE WRITTEN AUTHORIZATION OF INTI DESIGNS.

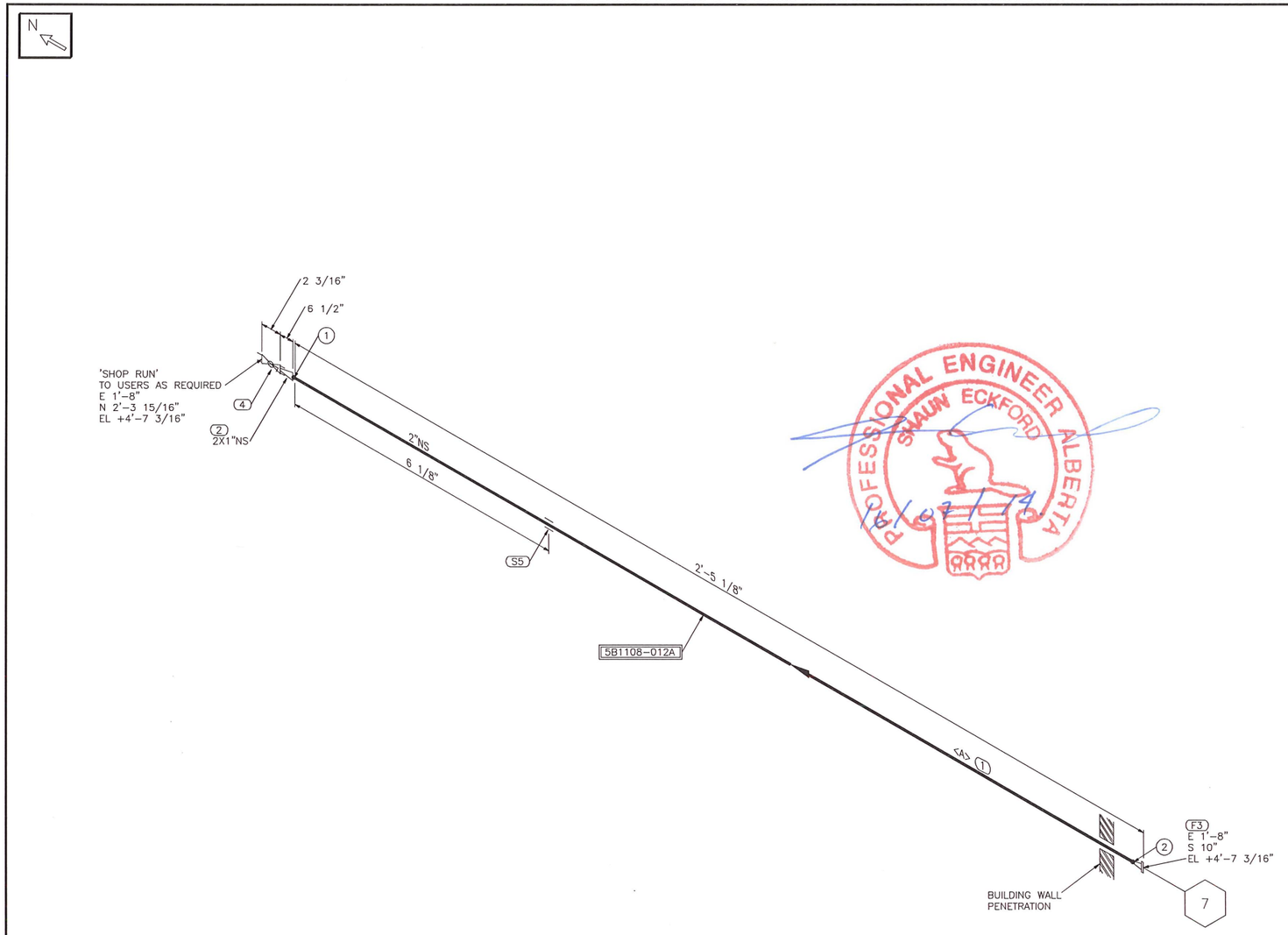

PROFESSIONAL ENGINEER ALBERTA
SHAUN ECKFORD
16/07/14

BILL OF MATERIAL

MARK	SIZE (INCH)	DESCRIPTION	QTY	WEIGHT (LBS)
		SHOP MATERIALS		
		PIPE		
1	2	PIPE, SCH 80, ASTM A333 GR6, SMLS, B36.10	2.3'	11.1
		FITTINGS		
2	2X1	CONC SWAGE, SCH 80x160, ASTM A420 WPL6, SMLS, MSS SP-95 BLE-TSE	1	2.0
		FLANGES		
3	2	FLANGE, CL150, SCH 80, RFWN, ASTM A350 LF2 CL1, B16.5	1	6.0
		VALVES / IN-LINE ITEMS		
4	1	BALL VALVE, CL800, THRD, LEVER OP, (BA8202A)	1	1.4
		SUPPORTS		
5	2	GU-2" & SA-4	1	0.2
		PIPE SPOOLS		
		5B1108-012A		

CUT PIPE LENGTH

PIECE NO	LENGTH (FT-INS)	N.S. (INS)	REMARKS	END ONE	END TWO	ITEM CODE
<A>	2'2 1/2"	2		BEVEL	BEVEL	5

TOTAL SHOP WEIGHT 20.6
TOTAL FIELD WEIGHT 0.0
TOTAL WEIGHT-THIS DWG 20.6

WELD NO.	SIZE	NOM. THK	WELD TYPE	DESCRIPTION	WELDER ID	DATE	NDE REPORT No.	V.T.
2	2"	SCH 80	BW					
1	2"	SCH 80	BW					

GENERAL NOTES:

1) ALL DIMENSIONS AND ELEVATIONS ARE IN IMPERIAL UNLESS OTHERWISE SPECIFIED.
2) REFER TO 5B1108-02-DR-80-000-1 FOR PIPE SUPPORT DRAWINGS.
3) SPOOL TO BE BUILT IN ACCORDANCE WITH ASME PRESSURE PIPING CODE B31.3, 2010 EDITION.
4) ALL FLANGE BOLT HOLES TO STRADDLE CENTER LINES (UNO).
5) THIS ISOMETRIC IS TO BE READ IN CONJUNCTION WITH DEVON NEC CORPORATION CS-5210 PIPING CLASS SPECIFICATIONS.
6) PIPING SPEC A13 IS TO SUPERCEDE A11 FOR ALL SMALL BORE VENTS, DRAINS AND INSTRUMENT CONNECTIONS AS PER 5BLUE RFI #4.
7) HYDRO TEST TO BE CHARTED FOR 1 HR.
8) 1/8" WELD GAP HAS BEEN TAKEN INTO ACCOUNT FOR ALL BW AND SW CONNECTIONS.
9) SHOP TO VERIFY ALL DIMENSIONS AND ELEVATIONS AND COORDINATES PRIOR TO FABRICATION.
10) JOINT NON-DESTRUCTIVE EXAMINATION:
ALL JOINT: 20% VISUAL, BW: 10% RT, SW: 5% RT(FIT-UP) + 10% MT, FILLET WELDS: 10% MT.

REV.	D/M/Y	DESCRIPTION	BY	CHK	APP
0	29/08/2013	ISSUED FOR CONSTRUCTION	RR	BB	

LEGEND:
- ○ : WELD NO.
- ⬭ : MARK NO.
- FFW ○ : FIELD FIT WELD
- ✕ : FIELD WELD
- 4 : SPOOL NUMBER
- : PIPE SUPPORT

STD WELD PROC:	5B-102/103	PAINT SYSTEM:	SEE E&IL
L.T. WELD PROC:	5B-102/103	INSULATION:	NA
RATING/SPEC:	CL150/AU11	SANDBLAST:	SSPC-SP6
HYDROTEST PSIG:	428	DESIGN TEMP 'F:	100
RADIOGRAPHY:	10%	DESIGN PRES PSIG:	285
STRESS RELIEVE:	NO		

5Blue Process Equipment Inc.

INTI DESIGNS

TITLE: DEVON NEC CORPORATION.
FERRIER CENTRAL PROCESSING FACILITY
CENTRAL OIL BATTERY – LIQUID EXTRACTION PLANT (LEP)
PIPING ISOMETRIC
LINE NO. 60-IA-AU11-22307

CLIENT DOCUMENT NUMBER	ISOMETRIC NUMBER	REV.
TBD	5B1108-02-DR-80-012-1	0

THIS IS THE EXCLUSIVE PROPERTY OF INTI DESIGNS AND MAY NOT BE COPIED OR COMMUNICATED TO A THIRD PARTY WITHOUT THE WRITTEN AUTHORIZATION OF INTI DESIGNS.

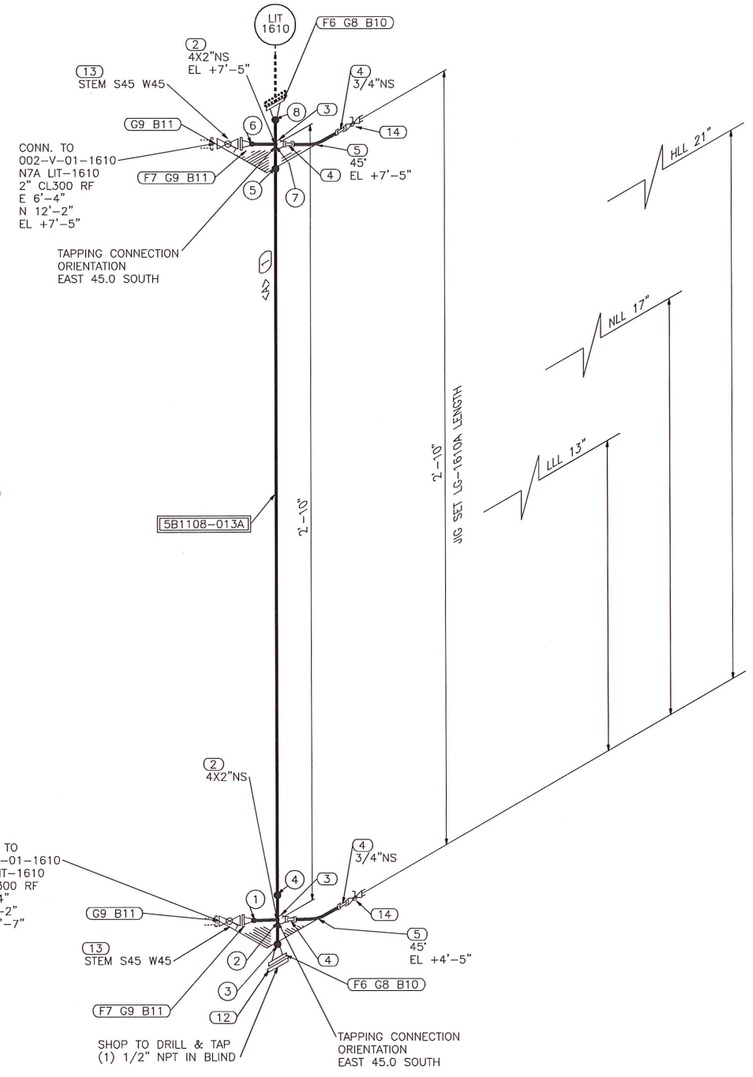

PROFESSIONAL ENGINEER ALBERTA SHAWN ECKFORD 16/07/13

BILL OF MATERIAL

MARK	SIZE (INCH)	DESCRIPTION	QTY	WEIGHT (LBS)
		SHOP MATERIALS		
		PIPE		
1	4	PIPE, SCH STD, ASTM A106B, SMLS, B36.10	2.2'	23.0
		FITTINGS		
2	4X2	RED TEE, SCH STDx80, ASTM A234 WPB, B16.9	2	29.0
3	3/4	THREADOLET, CL3000, ASTM A105N, MSS SP-97	2	0.7
4	3/4	NIPPLE, SCH 160, ASTM A106B, SMLS, B36.10 TBE (4.0000 LG)	4	7.8
5	3/4	45 DEG LR ELBOW, CL3000, THRD, ASTM A105N, B16.11	2	2.4
		FLANGES		
6	4	FLANGE, CL300, SCH STD, RFWN, ASTM A105N, B16.5	2	50.0
7	2	FLANGE, CL300, SCH 80, RFWN, ASTM A105N, B16.5	2	18.0
		GASKETS		
8	4	GASKET, CL300, RF, 1/8" THK, 316 SS SPIRAL WOUND, FLEX FILLER CGI, CS CENTERING RING, 316 SS INNER RING, B16.20	2	2.0
9	2	GASKET, CL300, RF, 1/8" THK, 316 SS SPIRAL WOUND, FLEX FILLER CGI, CS CENTERING RING, 316 SS INNER RING, B16.20	4	4.0
		BOLTS		
10	3/4X4 1/2	(8) STUDBOLT c/w 2 HEX NUTS, ASTM A193 GR B7, A194 GR 2H, B16.5	2	2.0
11	5/8X3 1/2	(8) STUDBOLT c/w 2 HEX NUTS, ASTM A193 GR B7, A194 GR 2H, B16.5	4	4.0
		VALVES / IN-LINE ITEMS		
12	4	HUB BLIND FLANGE, CL300, RF, ASTM A105N, B16.5 (c/w 1/2" DRILL & TAP)	1	27.0
13	2	BALL VALVE, CL300, RF, LEVER OP, (BV0306A)	2	76.0
14	3/4	BALL VALVE, CL800, THRD, LEVER OP, (BA8202A)	2	1.6
		PIPE SPOOLS		
		5B1108-013A		

CUT PIPE LENGTH

PIECE NO	LENGTH (FT-INS)	N.S. (INS)	REMARKS	END ONE	END TWO	ITEM CODE
<A>	2'1 1/2"	4		BEVEL	BEVEL	21

TOTAL SHOP WEIGHT 247.3
TOTAL FIELD WEIGHT 27.0
TOTAL WEIGHT-THIS DWG 274.3

WELD NO.	SIZE	NOM. THK	WELD TYPE	DESCRIPTION	WELDER ID	DATE	NDE REPORT No.	V.T.
8	4"	SCH STD	BW					
7	3/4"	CL3000	LET					
6	2"	SCH 80	BW					
5	4"	SCH STD	BW					
4	4"	SCH STD	BW					
3	4"	SCH STD	BW					
2	3/4"	CL3000	LET					
1	2"	SCH 80	BW					

GENERAL NOTES:

1) ALL DIMENSIONS AND ELEVATIONS ARE IN IMPERIAL UNLESS OTHERWISE SPECIFIED.
2) REFER TO 5B1108-02-DR-80-000-1 FOR PIPE SUPPORT DRAWINGS.
3) SPOOL TO BE BUILT IN ACCORDANCE WITH ASME PRESSURE PIPING CODE B31.3, 2010 EDITION.
4) ALL FLANGE BOLT HOLES TO STRADDLE CENTER LINES (UNO).
5) THIS ISOMETRIC IS TO BE READ IN CONJUNCTION WITH DEVON NEC CORPORATION GS-5210 PIPING CLASS SPECIFICATIONS.
6) PIPING SPEC A13 IS TO SUPERCEDE A11 FOR ALL SMALL BORE VENTS, DRAINS AND INSTRUMENT CONNECTIONS AS PER 5BLUE RFI #4.
7) HYDRO TEST TO BE CHARTED FOR 1 HR.
8) 1/8" WELD GAP HAS BEEN TAKEN INTO ACCOUNT FOR ALL BW AND SW CONNECTIONS.
9) SHOP TO VERIFY ALL DIMENSIONS AND ELEVATIONS AND COORDINATES PRIOR TO FABRICATION.
10) JOINT NON-DESTRUCTIVE EXAMINATION:
ALL JOINT: 20% VISUAL, BW: 10% RT, SW: 5% RT(FIT-UP) + 10% MT, FILLET WELDS: 10% MT.

REV.	D/M/Y	DESCRIPTION	BY	CHK	APP
0	23/08/2013	ISSUED FOR CONSTRUCTION	RR	BB	

LEGEND:
- ○ : WELD NO.
- ▭ : MARK NO.
- FFW ○ : FIELD FIT WELD
- ⊠ : FIELD WELD
- [4] : SPOOL NUMBER
- ⚌ : PIPE SUPPORT

STD WELD PROC:	5B-102/103	PAINT SYSTEM:	SEE E&IL
L.T. WELD PROC:	5B-102/103	INSULATION:	NA
RATING/SPEC:	CL150/A11	SANDBLAST:	SSPC-SP6
HYDROTEST PSIG:	428	DESIGN TEMP °F:	100
RADIOGRAPHY:	10%	DESIGN PRES PSIG:	285
STRESS RELIEVE:	NO		

5Blue Process Equipment Inc.

INTI DESIGNS

TITLE: DEVON NEC CORPORATION.
FERRIER CENTRAL PROCESSING FACILITY
CENTRAL OIL BATTERY - LIQUID EXTRACTION PLANT (LEP)
PIPING ISOMETRIC
LINE NO. 002-V-01-1610-LB-1610

CLIENT DOCUMENT NUMBER	ISOMETRIC NUMBER	REV.
TBD	5B1108-02-DR-80-013-1	0

THIS IS THE EXCLUSIVE PROPERTY OF INTI DESIGNS AND MAY NOT BE COPIED OR COMMUNICATED TO A THIRD PARTY WITHOUT THE WRITTEN AUTHORIZATION OF INTI DESIGNS.

N

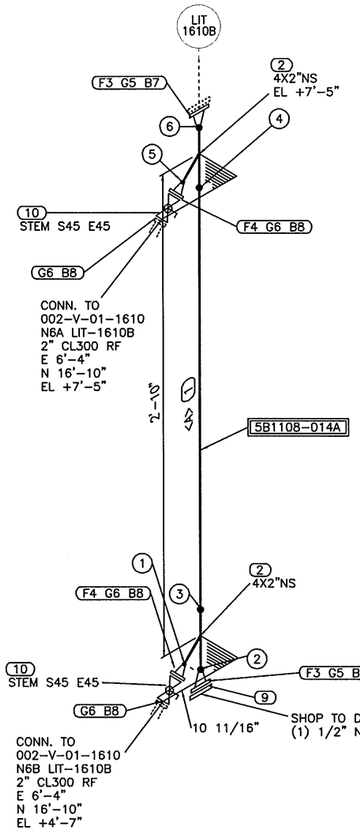

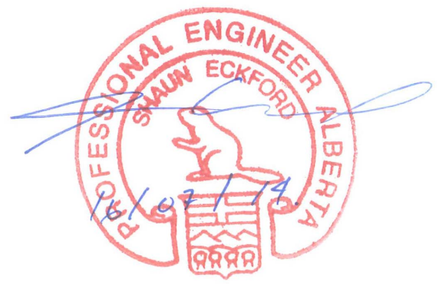

BILL OF MATERIAL

MARK	SIZE (INCH)	DESCRIPTION	QTY	WEIGHT (LBS)
		SHOP MATERIALS		
		PIPE		
1	4	PIPE, SCH STD, ASTM A106B, SMLS, B36.10	2.2'	23.0
		FITTINGS		
2	4X2	RED TEE, SCH STDx80, ASTM A234 WPB, B16.9	2	29.0
		FLANGES		
3	4	FLANGE, CL300, SCH STD, RFWN, ASTM A105N, B16.5	2	50.0
4	2	FLANGE, CL300, SCH 80, RFWN, ASTM A105N, B16.5	2	18.0
		GASKETS		
5	4	GASKET, CL300, RF, 1/8" THK, 316 SS SPIRAL WOUND, FLEX FILLER CGI, CS CENTERING RING, 316 SS INNER RING, B16.20	2	2.0
6	2	GASKET, CL300, RF, 1/8" THK, 316 SS SPIRAL WOUND, FLEX FILLER CGI, CS CENTERING RING, 316 SS INNER RING, B16.20	4	4.0
		BOLTS		
7	3/4X4 1/2	(8) STUDBOLT c/w 2 HEX NUTS, ASTM A193 GR B7, A194 GR 2H, B16.5	2	2.0
8	5/8X3 1/2	(8) STUDBOLT c/w 2 HEX NUTS, ASTM A193 GR B7, A194 GR 2H, B16.5	4	4.0
		VALVES / IN-LINE ITEMS		
9	4	HUB BLIND FLANGE, CL300, RF, ASTM A105N, B16.5 (c/w 1/2" DRILL & TAP)	1	27.0
10	2	BALL VALVE, CL300, RF, LEVER OP, (BV0306A)	2	76.0
		PIPE SPOOLS		
		5B1108-014A		

CUT PIPE LENGTH

PIECE NO	LENGTH (FT-INS)	N.S. (INS)	REMARKS	END ONE	END TWO	ITEM CODE
<A>	2'1 1/2"	4		BEVEL	BEVEL	23

TOTAL SHOP WEIGHT 234.9
TOTAL FIELD WEIGHT 27.0
TOTAL WEIGHT-THIS DWG 261.9

WELD NO.	SIZE	NOM. THK	WELD TYPE	DESCRIPTION	WELDER ID	DATE	NDE REPORT No.	V.T.
6	4"	SCH STD	BW					
5	2"	SCH 80	BW					
4	4"	SCH STD	BW					
3	4"	SCH STD	BW					
2	4"	SCH STD	BW					
1	2"	SCH 80	BW					

GENERAL NOTES:

1) ALL DIMENSIONS AND ELEVATIONS ARE IN IMPERIAL UNLESS OTHERWISE SPECIFIED.
2) REFER TO 5B1108-02-DR-80-000-1 FOR PIPE SUPPORT DRAWINGS.
3) SPOOL TO BE BUILT IN ACCORDANCE WITH ASME PRESSURE PIPING CODE B31.3, 2010 EDITION.
4) ALL FLANGE BOLT HOLES TO STRADDLE CENTER LINES (UNO).
5) THIS ISOMETRIC IS TO BE READ IN CONJUNCTION WITH DEVON NEC CORPORATION GS-5210 PIPING CLASS SPECIFICATIONS.
6) PIPING SPEC A13 IS TO SUPERCEDE A11 FOR ALL SMALL BORE VENTS, DRAINS AND INSTRUMENT CONNECTIONS AS PER 5BLUE RFI #4.
7) HYDRO TEST TO BE CHARTED FOR 1 HR.
8) 1/8" WELD GAP HAS BEEN TAKEN INTO ACCOUNT FOR ALL BW AND SW CONNECTIONS.
9) SHOP TO VERIFY ALL DIMENSIONS AND ELEVATIONS AND COORDINATES PRIOR TO FABRICATION.
10) JOINT NON-DESTRUCTIVE EXAMINATION:
ALL JOINT: 20% VISUAL, BW: 10% RT, SW: 5% RT(FIT-UP) + 10% MT, FILLET WELDS: 10% MT.

REV.	D/M/Y	DESCRIPTION	BY	CHK	APP
0	23/08/2013	ISSUED FOR CONSTRUCTION	RR	BB	

LEGEND:
○ : WELD NO.
⬭ : MARK NO.
FFW ○ : FIELD FIT WELD
✕ : FIELD WELD
4 : SPOOL NUMBER
: PIPE SUPPORT

STD WELD PROC:	5B-102/103	PAINT SYSTEM:	SEE E&IL
L.T. WELD PROC:	5B-102/103	INSULATION:	NA
RATING/SPEC:	CL150/A11	SANDBLAST:	SSPC-SP6
HYDROTEST PSIG:	428	DESIGN TEMP °F:	100
RADIOGRAPHY:	10%	DESIGN PRES PSIG:	285
STRESS RELIEVE:	NO		

5Blue Process Equipment Inc.

INTI DESIGNS

TITLE: DEVON NEC CORPORATION.
FERRIER CENTRAL PROCESSING FACILITY
CENTRAL OIL BATTERY – LIQUID EXTRACTION PLANT (LEP)
PIPING ISOMETRIC
LINE NO. 002-V-01-1610-LB-1610B

CLIENT DOCUMENT NUMBER	ISOMETRIC NUMBER	REV.
TBD	5B1108-02-DR-80-014-1	0

THIS IS THE EXCLUSIVE PROPERTY OF INTI DESIGNS AND MAY NOT BE COPIED OR COMMUNICATED TO A THIRD PARTY WITHOUT THE WRITTEN AUTHORIZATION OF INTI DESIGNS.

N



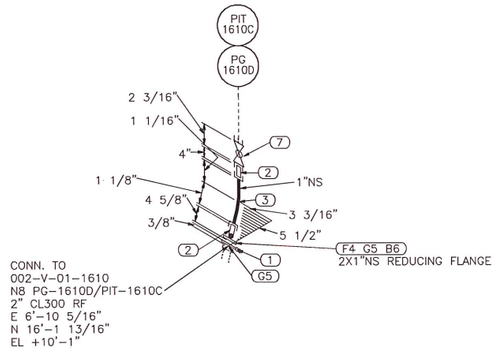

BILL OF MATERIAL

MARK	SIZE (INCH)	DESCRIPTION	QTY	WEIGHT (LBS)
		SHOP MATERIALS		
		FITTINGS		
1	2	SPEC BLIND, CL300, RF, ASTM A516 GR 70N, B16.48	1	3.0
2	1	NIPPLE, SCH 160, ASTM A106B, SMLS, B36.10 TBE (4.0000 LG)	2	5.7
3	1	90 DEG LR ELBOW, CL3000, THRD, ASTM A105N, B16.11	1	2.3
		FLANGES		
4	2X1	FLANGE, RED, CL300, RFTHRD, ASTM A105N, B16.5	1	7.0
		GASKETS		
5	2	GASKET, CL300, RF, 1/8" THK, 316 SS SPIRAL WOUND, FLEX FILLER CGI, CS CENTERING RING, 316 SS INNER RING, B16.20	2	2.0
		BOLTS		
6	5/8X4	(8) STUDBOLT c/w 2 HEX NUTS, ASTM A193 GR B7, A194 GR 2H, B16.5	1	1.0
		VALVES / IN-LINE ITEMS		
7	1	BALL VALVE, CL800, THRD, LEVER OP, (BA8202A)	1	1.4

TOTAL SHOP WEIGHT 22.4
TOTAL FIELD WEIGHT 0.0
TOTAL WEIGHT-THIS DWG 22.4

GENERAL NOTES:

1) ALL DIMENSIONS AND ELEVATIONS ARE IN IMPERIAL UNLESS OTHERWISE SPECIFIED.
2) REFER TO 5B1108-02-DR-80-000-1 FOR PIPE SUPPORT DRAWINGS.
3) SPOOL TO BE BUILT IN ACCORDANCE WITH ASME PRESSURE PIPING CODE B31.3, 2010 EDITION.
4) ALL FLANGE BOLT HOLES TO STRADDLE CENTER LINES (UNO).
5) THIS ISOMETRIC IS TO BE READ IN CONJUNCTION WITH DEVON NEC CORPORATION GS-5210 PIPING CLASS SPECIFICATIONS.
6) PIPING SPEC A13 IS TO SUPERCEDE A11 FOR ALL SMALL BORE VENTS, DRAINS AND INSTRUMENT CONNECTIONS AS PER 5BLUE RFI #4.
7) HYDRO TEST TO BE CHARTED FOR 1 HR.
8) 1/8" WELD GAP HAS BEEN TAKEN INTO ACCOUNT FOR ALL BW AND SW CONNECTIONS.
9) SHOP TO VERIFY ALL DIMENSIONS AND ELEVATIONS AND COORDINATES PRIOR TO FABRICATION.
10) JOINT NON-DESTRUCTIVE EXAMINATION:
ALL JOINT: 20% VISUAL, BW: 10% RT, SW: 5% RT(FIT-UP) + 10% MT, FILLET WELDS: 10% MT.

REV.	D/M/Y	DESCRIPTION	BY	CHK	APP
0	23/08/2013	ISSUED FOR CONSTRUCTION	RR	BB	

LEGEND:
- ○ : WELD NO.
- ▭ : MARK NO.
- FFW ○ : FIELD FIT WELD
- ✕ : FIELD WELD
- [4] : SPOOL NUMBER
- —— : PIPE SUPPORT

STD WELD PROC:	5B-102/103	PAINT SYSTEM:	SEE E&IL
L.T. WELD PROC:	5B-102/103	INSULATION:	NA
RATING/SPEC:	CL150/A11	SANDBLAST:	SSPC-SP6
HYDROTEST PSIG:	428	DESIGN TEMP °F:	100
RADIOGRAPHY:	10%	DESIGN PRES PSIG:	285
STRESS RELIEVE:	NO		

5Blue Process Equipment Inc.

INTI DESIGNS

TITLE: DEVON NEC CORPORATION.
FERRIER CENTRAL PROCESSING FACILITY
CENTRAL OIL BATTERY – LIQUID EXTRACTION PLANT (LEP)
PIPING ISOMETRIC
LINE NO. 002-V-01-1610-PG-1610D/PIT-1610C

CLIENT DOCUMENT NUMBER	ISOMETRIC NUMBER	REV.
TBD	5B1108-02-DR-80-015-1	0

THIS IS THE EXCLUSIVE PROPERTY OF INTI DESIGNS AND MAY NOT BE COPIED OR COMMUNICATED TO A THIRD PARTY WITHOUT THE WRITTEN AUTHORIZATION OF INTI DESIGNS.

N

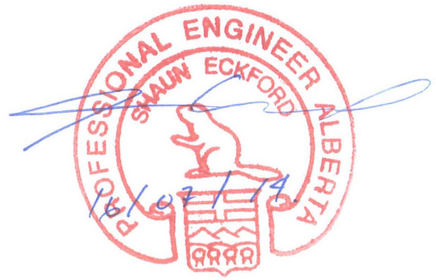

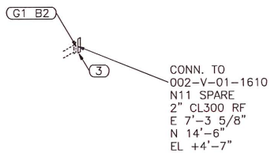

BILL OF MATERIAL

MARK	SIZE (INCH)	DESCRIPTION	QTY	WEIGHT (LBS)
		SHOP MATERIALS		
		GASKETS		
1	2	GASKET, CL300, RF, 1/8" THK, 316 SS SPIRAL WOUND, FLEX FILLER CGI, CS CENTERING RING, 316 SS INNER RING, B16.20	1	1.0
		BOLTS		
2	5/8X3 1/2	(8) STUDBOLT c/w 2 HEX NUTS, ASTM A193 GR B7, A194 GR 2H, B16.5	1	1.0
		VALVES / IN-LINE ITEMS		
3	2	BLIND FLANGE, CL300, RF, ASTM A105N, B16.5	1	8.0

TOTAL SHOP WEIGHT 10.0
TOTAL FIELD WEIGHT 0.0
TOTAL WEIGHT-THIS DWG 10.0

GENERAL NOTES:

1) ALL DIMENSIONS AND ELEVATIONS ARE IN IMPERIAL UNLESS OTHERWISE SPECIFIED.
2) REFER TO 5B1108-02-DR-80-000-1 FOR PIPE SUPPORT DRAWINGS.
3) SPOOL TO BE BUILT IN ACCORDANCE WITH ASME PRESSURE PIPING CODE B31.3, 2010 EDITION.
4) ALL FLANGE BOLT HOLES TO STRADDLE CENTER LINES (UNO).
5) THIS ISOMETRIC IS TO BE READ IN CONJUNCTION WITH DEVON NEC CORPORATION GS-5210 PIPING CLASS SPECIFICATIONS.
6) PIPING SPEC A13 IS TO SUPERCEDE A11 FOR ALL SMALL BORE VENTS, DRAINS AND INSTRUMENT CONNECTIONS AS PER 5BLUE RFI #4.
7) HYDRO TEST TO BE CHARTED FOR 1 HR.
8) 1/8" WELD GAP HAS BEEN TAKEN INTO ACCOUNT FOR ALL BW AND SW CONNECTIONS.
9) SHOP TO VERIFY ALL DIMENSIONS AND ELEVATIONS AND COORDINATES PRIOR TO FABRICATION.
10) JOINT NON-DESTRUCTIVE EXAMINATION:
ALL JOINT: 20% VISUAL, BW: 10% RT, SW: 5% RT(FIT-UP) + 10% MT, FILLET WELDS: 10% MT.

REV.	D/M/Y	DESCRIPTION	BY	CHK	APP
0	23/08/2013	ISSUED FOR CONSTRUCTION	RR	BB	

LEGEND:
- ○ : WELD NO.
- ⬭ : MARK NO.
- FFW ○ : FIELD FIT WELD
- ⨯ : FIELD WELD
- 4 : SPOOL NUMBER
- : PIPE SUPPORT

STD WELD PROC:	5B-102/103	PAINT SYSTEM:	SEE E&IL
L.T. WELD PROC:	5B-102/103	INSULATION:	NA
RATING/SPEC:	CL150/A11	SANDBLAST:	SSPC-SP6
HYDROTEST PSIG:	428	DESIGN TEMP °F:	100
RADIOGRAPHY:	10%	DESIGN PRES PSIG:	285
STRESS RELIEVE:	NO		

5Blue Process Equipment Inc.

INTI DESIGNS

TITLE: DEVON NEC CORPORATION.
FERRIER CENTRAL PROCESSING FACILITY
CENTRAL OIL BATTERY - LIQUID EXTRACTION PLANT (LEP)
PIPING ISOMETRIC
LINE NO. 002-V-01-1610-SPARE

CLIENT DOCUMENT NUMBER	ISOMETRIC NUMBER	REV.
TBD	5B1108-02-DR-80-016-1	0

THIS IS THE EXCLUSIVE PROPERTY OF INTI DESIGNS AND MAY NOT BE COPIED OR COMMUNICATED TO A THIRD PARTY WITHOUT THE WRITTEN AUTHORIZATION OF INTI DESIGNS.

N

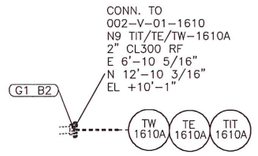

BILL OF MATERIAL

MARK	SIZE (INCH)	DESCRIPTION	QTY	WEIGHT (LBS)
		SHOP MATERIALS		
		GASKETS		
1	2	GASKET, CL300, RF, 1/8" THK, 316 SS SPIRAL WOUND, FLEX FILLER CGI, CS CENTERING RING, 316 SS INNER RING, B16.20	1	1.0
		BOLTS		
2	5/8X3 1/2	(8) STUDBOLT c/w 2 HEX NUTS, ASTM A193 GR B7, A194 GR 2H, B16.5	1	1.0

TOTAL SHOP WEIGHT 2.0
TOTAL FIELD WEIGHT 0.0
TOTAL WEIGHT-THIS DWG 2.0

PROFESSIONAL ENGINEER ALBERTA
SHAUN ECKFORD
16/07/14

GENERAL NOTES:

1) ALL DIMENSIONS AND ELEVATIONS ARE IN IMPERIAL UNLESS OTHERWISE SPECIFIED.
2) REFER TO 5B1108-02-DR-80-000-1 FOR PIPE SUPPORT DRAWINGS.
3) SPOOL TO BE BUILT IN ACCORDANCE WITH ASME PRESSURE PIPING CODE B31.3, 2010 EDITION.
4) ALL FLANGE BOLT HOLES TO STRADDLE CENTER LINES (UNO).
5) THIS ISOMETRIC IS TO BE READ IN CONJUNCTION WITH DEVON NEC CORPORATION GS-5210 PIPING CLASS SPECIFICATIONS.
6) PIPING SPEC A13 IS TO SUPERCEDE A11 FOR ALL SMALL BORE VENTS, DRAINS AND INSTRUMENT CONNECTIONS AS PER 5BLUE RFI #4.
7) HYDRO TEST TO BE CHARTED FOR 1 HR.
8) 1/8" WELD GAP HAS BEEN TAKEN INTO ACCOUNT FOR ALL BW AND SW CONNECTIONS.
9) SHOP TO VERIFY ALL DIMENSIONS AND ELEVATIONS AND COORDINATES PRIOR TO FABRICATION.
10) JOINT NON-DESTRUCTIVE EXAMINATION:
ALL JOINT: 20% VISUAL, BW: 10% RT, SW: 5% RT(FIT-UP) + 10% MT, FILLET WELDS: 10% MT.

REV.	D/M/Y	DESCRIPTION	BY	CHK	APP
0	23/08/2013	ISSUED FOR CONSTRUCTION	RR	BB	

LEGEND:
- ○ : WELD NO.
- ▭ : MARK NO.
- FFW ○ : FIELD FIT WELD
- ✕ : FIELD WELD
- [4] : SPOOL NUMBER
- : PIPE SUPPORT

STD WELD PROC:	5B-102/103	PAINT SYSTEM:	SEE E&IL
L.T. WELD PROC:	5B-102/103	INSULATION:	NA
RATING/SPEC:	CL150/A11	SANDBLAST:	SSPC-SP6
HYDROTEST PSIG:	428	DESIGN TEMP °F:	100
RADIOGRAPHY:	10%	DESIGN PRES PSIG:	285
STRESS RELIEVE:	NO		

5Blue Process Equipment Inc.

INTI DESIGNS

TITLE: DEVON NEC CORPORATION.
FERRIER CENTRAL PROCESSING FACILITY
CENTRAL OIL BATTERY – LIQUID EXTRACTION PLANT (LEP)
PIPING ISOMETRIC
LINE NO. 002-V-01-1610-TW/TE-1610A

CLIENT DOCUMENT NUMBER	ISOMETRIC NUMBER	REV.
TBD	5B1108-02-DR-80-017-1	0

THIS IS THE EXCLUSIVE PROPERTY OF INTI DESIGNS AND MAY NOT BE COPIED OR COMMUNICATED TO A THIRD PARTY WITHOUT THE WRITTEN AUTHORIZATION OF INTI DESIGNS.



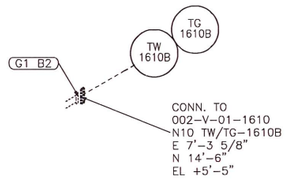

BILL OF MATERIAL

MARK	SIZE (INCH)	DESCRIPTION	QTY	WEIGHT (LBS)
		SHOP MATERIALS		
		GASKETS		
1	2	GASKET, CL300, RF, 1/8" THK, 316 SS SPIRAL WOUND, FLEX FILLER CGI, CS CENTERING RING, 316 SS INNER RING, B16.20	1	1.0
		BOLTS		
2	5/8X3 1/2	(8) STUDBOLT c/w 2 HEX NUTS, ASTM A193 GR B7, A194 GR 2H, B16.5	1	1.0

TOTAL SHOP WEIGHT 2.0
TOTAL FIELD WEIGHT 0.0
TOTAL WEIGHT-THIS DWG 2.0

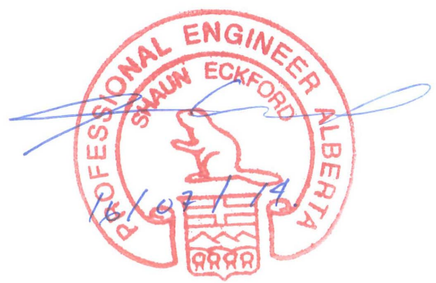

GENERAL NOTES:

1) ALL DIMENSIONS AND ELEVATIONS ARE IN IMPERIAL UNLESS OTHERWISE SPECIFIED.
2) REFER TO 5B1108-02-DR-80-000-1 FOR PIPE SUPPORT DRAWINGS.
3) SPOOL TO BE BUILT IN ACCORDANCE WITH ASME PRESSURE PIPING CODE B31.3, 2010 EDITION.
4) ALL FLANGE BOLT HOLES TO STRADDLE CENTER LINES (UNO).
5) THIS ISOMETRIC IS TO BE READ IN CONJUNCTION WITH DEVON NEC CORPORATION GS-5210 PIPING CLASS SPECIFICATIONS.
6) PIPING SPEC A13 IS TO SUPERCEDE A11 FOR ALL SMALL BORE VENTS, DRAINS AND INSTRUMENT CONNECTIONS AS PER 5BLUE RFI #4.
7) HYDRO TEST TO BE CHARTED FOR 1 HR.
8) 1/8" WELD GAP HAS BEEN TAKEN INTO ACCOUNT FOR ALL BW AND SW CONNECTIONS.
9) SHOP TO VERIFY ALL DIMENSIONS AND ELEVATIONS AND COORDINATES PRIOR TO FABRICATION.
10) JOINT NON-DESTRUCTIVE EXAMINATION:
ALL JOINT: 20% VISUAL, BW: 10% RT, SW: 5% RT(FIT-UP) + 10% MT, FILLET WELDS: 10% MT.

REV.	D/M/Y	DESCRIPTION	BY	CHK	APP
0	23/08/2013	ISSUED FOR CONSTRUCTION	RR	BB	

LEGEND:
- ○ : WELD NO.
- ⬭ : MARK NO.
- FFW ○ : FIELD FIT WELD
- ✕ : FIELD WELD
- 4 : SPOOL NUMBER
- : PIPE SUPPORT

STD WELD PROC:	5B-102/103	PAINT SYSTEM:	SEE E&IL
L.T. WELD PROC:	5B-102/103	INSULATION:	NA
RATING/SPEC:	CL150/A11	SANDBLAST:	SSPC-SP6
HYDROTEST PSIG:	428	DESIGN TEMP °F:	100
RADIOGRAPHY:	10%	DESIGN PRES PSIG:	285
STRESS RELIEVE:	NO		

5Blue Process Equipment Inc.

INTI DESIGNS

TITLE: DEVON NEC CORPORATION.
FERRIER CENTRAL PROCESSING FACILITY
CENTRAL OIL BATTERY - LIQUID EXTRACTION PLANT (LEP)
PIPING ISOMETRIC
LINE NO. 002-V-01-1610-TW/TG-1610B

CLIENT DOCUMENT NUMBER	ISOMETRIC NUMBER	REV.
TBD	5B1108-02-DR-80-018-1	0

THIS IS THE EXCLUSIVE PROPERTY OF INTI DESIGNS AND MAY NOT BE COPIED OR COMMUNICATED TO A THIRD PARTY WITHOUT THE WRITTEN AUTHORIZATION OF INTI DESIGNS.

N

(1) SHOWN
(2) REQUIRED

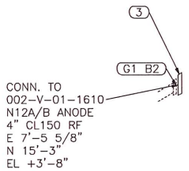

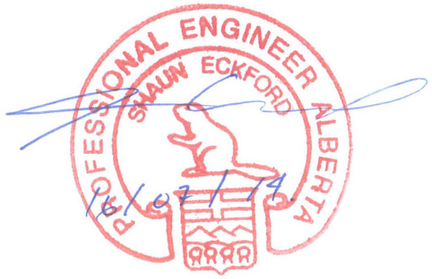

BILL OF MATERIAL

MARK	SIZE (INCH)	DESCRIPTION	QTY	WEIGHT (LBS)
		SHOP MATERIALS		
		GASKETS		
1	4	GASKET, CL150, RF, 1/8" THK, 316 SS SPIRAL WOUND, FLEX FILLER CGI, CS CENTERING RING, 316 SS INNER RING, B16.20	1	1.0
		BOLTS		
2	5/8X3 3/4	(8) STUDBOLT c/w 2 HEX NUTS, ASTM A193 GR B7, A194 GR 2H, B16.5	1	1.0
		VALVES / IN-LINE ITEMS		
3	4	BLIND FLANGE, CL150, RF, ASTM A105N, B16.5	1	17.0

TOTAL SHOP WEIGHT 19.0
TOTAL FIELD WEIGHT 0.0
TOTAL WEIGHT-THIS DWG 19.0

GENERAL NOTES:

1) ALL DIMENSIONS AND ELEVATIONS ARE IN IMPERIAL UNLESS OTHERWISE SPECIFIED.
2) REFER TO 5B1108-02-DR-80-000-1 FOR PIPE SUPPORT DRAWINGS.
3) SPOOL TO BE BUILT IN ACCORDANCE WITH ASME PRESSURE PIPING CODE B31.3, 2010 EDITION.
4) ALL FLANGE BOLT HOLES TO STRADDLE CENTER LINES (UNO).
5) THIS ISOMETRIC IS TO BE READ IN CONJUNCTION WITH DEVON NEC CORPORATION GS-5210 PIPING CLASS SPECIFICATIONS.
6) PIPING SPEC A13 IS TO SUPERCEDE A11 FOR ALL SMALL BORE VENTS, DRAINS AND INSTRUMENT CONNECTIONS AS PER 5BLUE RFI #4.
7) HYDRO TEST TO BE CHARTED FOR 1 HR.
8) 1/8" WELD GAP HAS BEEN TAKEN INTO ACCOUNT FOR ALL BW AND SW CONNECTIONS.
9) SHOP TO VERIFY ALL DIMENSIONS AND ELEVATIONS AND COORDINATES PRIOR TO FABRICATION.
10) JOINT NON-DESTRUCTIVE EXAMINATION:
ALL JOINT: 20% VISUAL, BW: 10% RT, SW: 5% RT(FIT-UP) + 10% MT, FILLET WELDS: 10% MT.

REV.	D/M/Y	DESCRIPTION	BY	CHK	APP
0	23/08/2013	ISSUED FOR CONSTRUCTION	RR	BB	

LEGEND:
○ : WELD NO.
▭ : MARK NO.
FFW ○ : FIELD FIT WELD
✕ : FIELD WELD
4 : SPOOL NUMBER
— : PIPE SUPPORT

STD WELD PROC:	5B-102/103	PAINT SYSTEM:	SEE E&IL
L.T. WELD PROC:	5B-102/103	INSULATION:	NA
RATING/SPEC:	CL150/A11	SANDBLAST:	SSPC-SP6
HYDROTEST PSIG:	428	DESIGN TEMP °F:	100
RADIOGRAPHY:	10%	DESIGN PRES PSIG:	285
STRESS RELIEVE:	NO		

5Blue Process Equipment Inc.

INTI DESIGNS

TITLE: DEVON NEC CORPORATION.
FERRIER CENTRAL PROCESSING FACILITY
CENTRAL OIL BATTERY - LIQUID EXTRACTION PLANT (LEP)
PIPING ISOMETRIC
LINE NO. 002-V-01-1610-ANODES

CLIENT DOCUMENT NUMBER	ISOMETRIC NUMBER	REV.
TBD	5B1108-02-DR-80-019-1	0

THIS IS THE EXCLUSIVE PROPERTY OF INTI DESIGNS AND MAY NOT BE COPIED OR COMMUNICATED TO A THIRD PARTY WITHOUT THE WRITTEN AUTHORIZATION OF INTI DESIGNS.

N

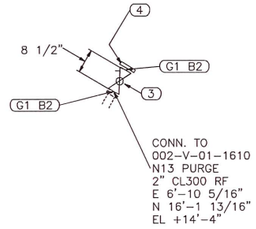

BILL OF MATERIAL

MARK	SIZE (INCH)	DESCRIPTION	QTY	WEIGHT (LBS)
		SHOP MATERIALS		
		GASKETS		
1	2	GASKET, CL300, RF, 1/8" THK, 316 SS SPIRAL WOUND, FLEX FILLER CGI, CS CENTERING RING, 316 SS INNER RING, B16.20	2	2.0
		BOLTS		
2	5/8X3 1/2	(8) STUDBOLT c/w 2 HEX NUTS, ASTM A193 GR B7, A194 GR 2H, B16.5	2	2.0
		VALVES / IN-LINE ITEMS		
3	2	BALL VALVE, CL300, RF, LEVER OP, (BA0306A1)	1	38.0
4	2	BLIND FLANGE, CL300, RF, ASTM A105N, B16.5	1	8.0

TOTAL SHOP WEIGHT 50.0
TOTAL FIELD WEIGHT 0.0
TOTAL WEIGHT-THIS DWG 50.0

PROFESSIONAL ENGINEER ALBERTA
SHAUN ECKFORD
16/07/14

GENERAL NOTES:

1) ALL DIMENSIONS AND ELEVATIONS ARE IN IMPERIAL UNLESS OTHERWISE SPECIFIED.
2) REFER TO 5B1108-02-DR-80-000-1 FOR PIPE SUPPORT DRAWINGS.
3) SPOOL TO BE BUILT IN ACCORDANCE WITH ASME PRESSURE PIPING CODE B31.3, 2010 EDITION.
4) ALL FLANGE BOLT HOLES TO STRADDLE CENTER LINES (UNO).
5) THIS ISOMETRIC IS TO BE READ IN CONJUNCTION WITH DEVON NEC CORPORATION GS-5210 PIPING CLASS SPECIFICATIONS.
6) PIPING SPEC A13 IS TO SUPERCEDE A11 FOR ALL SMALL BORE VENTS, DRAINS AND INSTRUMENT CONNECTIONS AS PER 5BLUE RFI #4.
7) HYDRO TEST TO BE CHARTED FOR 1 HR.
8) 1/8" WELD GAP HAS BEEN TAKEN INTO ACCOUNT FOR ALL BW AND SW CONNECTIONS.
9) SHOP TO VERIFY ALL DIMENSIONS AND ELEVATIONS AND COORDINATES PRIOR TO FABRICATION.
10) JOINT NON-DESTRUCTIVE EXAMINATION:
ALL JOINT: 20% VISUAL, BW: 10% RT, SW: 5% RT(FIT-UP) + 10% MT, FILLET WELDS: 10% MT.

REV.	D/M/Y	DESCRIPTION	BY	CHK	APP
0	23/08/2013	ISSUED FOR CONSTRUCTION	RR	BB	

LEGEND:
○ : WELD NO.
▭ : MARK NO.
FFW ○ : FIELD FIT WELD
✕ : FIELD WELD
[4] : SPOOL NUMBER
═ : PIPE SUPPORT

STD WELD PROC:	5B-102/103	PAINT SYSTEM:	SEE E&IL
L.T. WELD PROC:	5B-102/103	INSULATION:	NA
RATING/SPEC:	CL150/A11	SANDBLAST:	SSPC-SP6
HYDROTEST PSIG:	428	DESIGN TEMP °F:	100
RADIOGRAPHY:	10%	DESIGN PRES PSIG:	285
STRESS RELIEVE:	NO		

5Blue Process Equipment Inc.

INTI DESIGNS

TITLE: DEVON NEC CORPORATION.
FERRIER CENTRAL PROCESSING FACILITY
CENTRAL OIL BATTERY - LIQUID EXTRACTION PLANT (LEP)
PIPING ISOMETRIC
LINE NO. 002-V-01-1610-PURGE

CLIENT DOCUMENT NUMBER	ISOMETRIC NUMBER	REV.
TBD	5B1108-02-DR-80-020-1	0

A7 Structural Steel Drawings (Skid, Pipe Supports, Platforms, Buildings, etc.)

2303-8th Street, Nisku Alberta, T9E-7Z3 CANADA

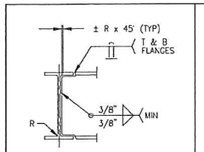

COPING DETAIL
MAIN MEMBERS

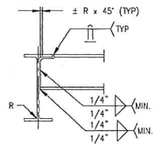

COPING DETAIL
CHANNEL TO BEAM

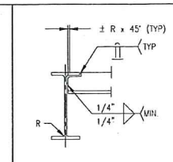

COPING DETAIL
ANGLE TO BEAM

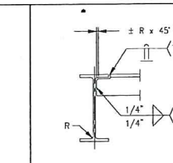

COPING DETAIL
ANGLE TO BEAM

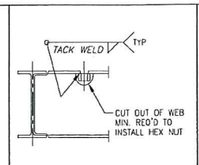

BOLTING DETAIL

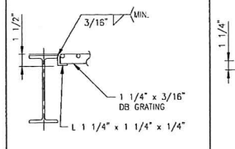

GRATING SUPPORT DETAIL 1

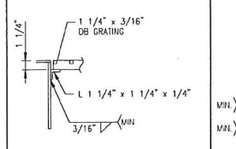

GRATING SUPPORT DETAIL 2

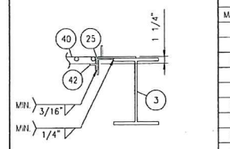

GRATING SUPPORT DETAIL 3

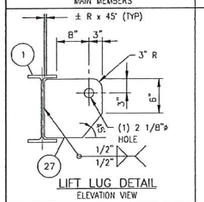

LIFT LUG DETAIL
ELEVATION VIEW

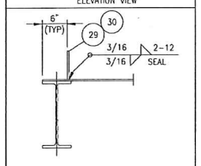

CONTAINMENT LIP

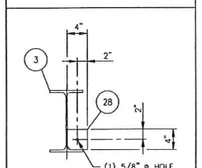

GROUNDING LUG DETAIL

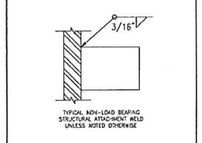

TYPICAL WELD DETAIL

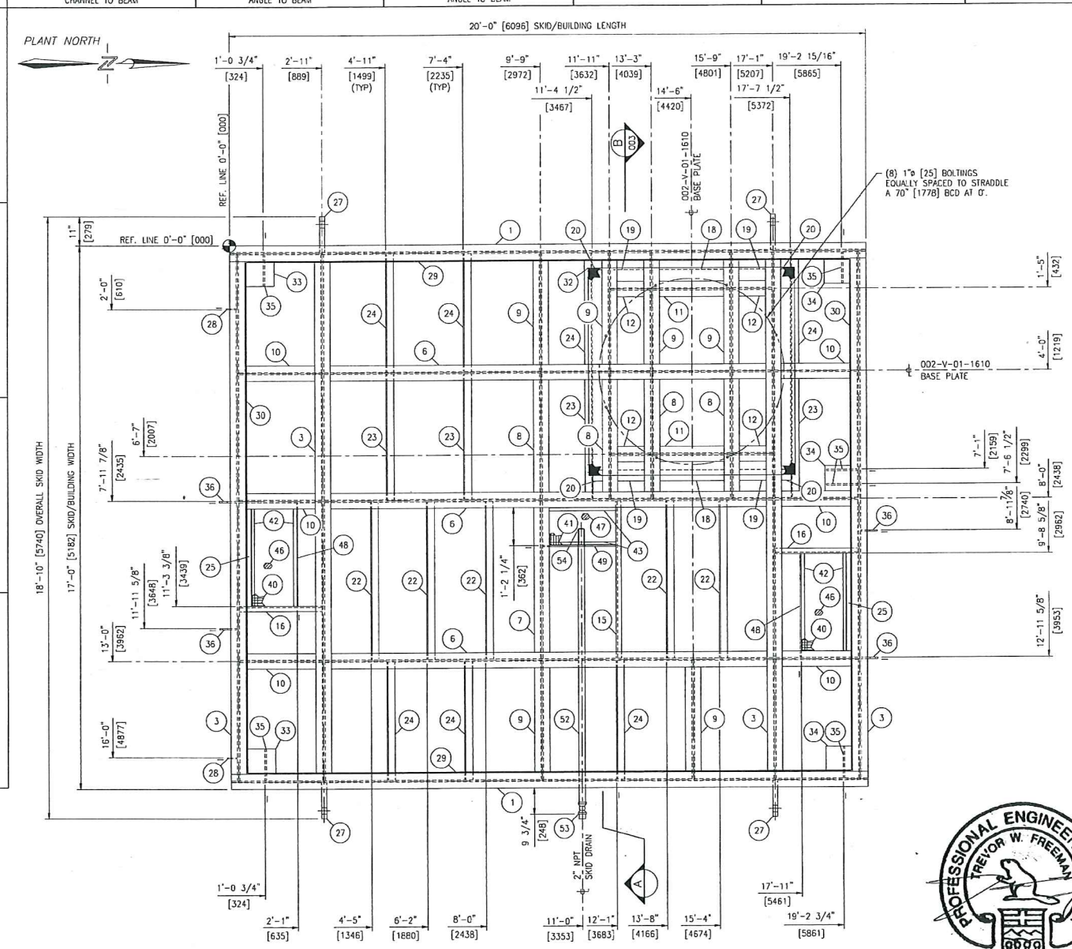

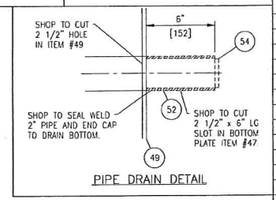

PIPE DRAIN DETAIL

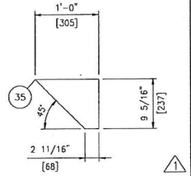

ITEM #35 DETAIL
SCALE: 1"=1'-0"
(1) SHOWN (6) REQUIRED

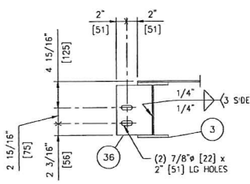

ITEM #36 DETAIL
SCALE: 1"=1'-0"
(1) SHOWN (4) REQUIRED

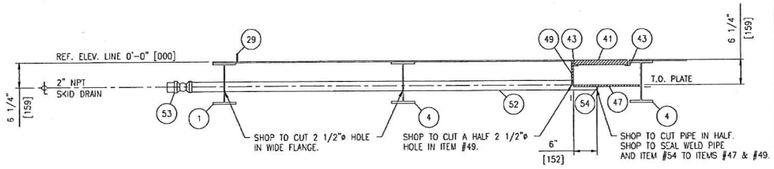

SECTION 'A–A'
SCALE: 3/4"=1'-0"
LOOKING SOUTH

BILL OF MATERIAL

MARK	DESCRIPTION	LONG ANNOTATION	LENGTH	QTY	MATERIAL
1	MAIN SUPPORT	W10 @ 26#	20'-0"	2	SA/CSA-G40.21-50W
3	MAIN SUPPORT	W10 @ 26#	16'-5 15/16"	4	SA/CSA-G40.21-50W
6	SUPPORT	W10 @ 26#	14'-1 11/16"	3	SA/CSA-G40.21-50W
7	SUPPORT	W10 @ 26#	4'-11 3/4"	1	SA/CSA-G40.21-50W
8	SUPPORT	W10 @ 26#	3'-11 3/4"	4	SA/CSA-G40.21-50W
9	SUPPORT	W10 @ 26#	3'-8 13/16"	6	SA/CSA-G40.21-50W
10	SUPPORT	W10 @ 26#	2'-7 7/8"	6	SA/CSA-G40.21-50W
11	SUPPORT	W10 @ 26#	2'-5 3/4"	2	SA/CSA-G40.21-50W
12	SUPPORT	W10 @ 26#	1'-3 11/16"	4	SA/CSA-G40.21-50W
15	SUPPORT	C6 @ 10.5#	4'-11 3/4"	1	SA/CSA-G40.21-44W
16	SUPPORT	C6 @ 10.5#	2'-7 7/8"	2	SA/CSA-G40.21-44W
18	SUPPORT PLATE	4" x 3/8" FB	2'-0 1/8"	2	SA/CSA-G40.21-44W
19	SUPPORT PLATE	4" x 3/8" FB	10 3/16"	4	SA/CSA-G40.21-44W
20	SUPPORT PLATE	4" x 3/8" FB	3 5/8"	4	SA/CSA-G40.21-44W
22	SUPPORT	3" x 3" x 3/8" ANGLE	4'-11 3/4"	5	SA/CSA-G40.21-44W
23	SUPPORT	3" x 3" x 3/8" ANGLE	3'-11 3/4"	4	SA/CSA-G40.21-44W
24	SUPPORT	3" x 3" x 3/8" ANGLE	3'-8 13/16"	7	SA/CSA-G40.21-44W
25	SUPPORT	2" x 2" x 1/4" ANGLE	3'-0 1/2"	2	SA/CSA-G40.21-44W
27	LIFT LUG	1'-1 3/4" WIDE x 1 1/2" PL x 9 1/4" HIGH (SEE DETAIL)		4	NOTE #15
28	GROUNDING LUG	4" SO x 3/8" FL (SEE DETAIL)		2	SA/CSA-G40.21-44W
29	CONTAINMENT LIP	2" x 1/4" FB	18'-11 1/2"	2	SA/CSA-G40.21-44W
30	CONTAINMENT LIP	2" x 1/4" FB	15'-11 1/2"	2	SA/CSA-G40.21-44W
32	BASE PLATE	6'-6" SO x 1 1/4" PL		1	SA/CSA-G40.21-44W
33	SUPPORT PLATE	9 1/2" x 7/16" PL x 11" LG		2	SA/CSA-G40.21-44W
34	SUPPORT PLATE	9 1/2" x 7/16" PL x 10" LG		3	SA/CSA-G40.21-44W
35	GUSSET PLATE	1'-0" x 1/2" PL x 9 5/16" (SEE DETAIL)		6	SA/CSA-G40.21-44W
36	PLATFORM CONN. PLATE	6 11/16" x 1/2" PL x 9 5/16" LG (SEE DETAIL)		4	SA/CSA-G40.21-44W
40	DRAIN GRATING	1 1/4" x 3/16" TYPE 19-4 DB SERRATED GRATING x 3'-0" WIDE	1'-4 1/2"	2	CS/GALVANIZED
41	DRAIN GRATING	1 1/4" x 3/16" TYPE 19-4 DB SERRATED GRATING x 2'-0 1/2" WIDE	1'-1 1/2"	1	CS/GALVANIZED
42	GRATING SUPPORT	1 1/4" x 1 1/4" x 1/4" ANGLE	3'-0 1/2"	4	SA/CSA-G40.21-44W
43	GRATING SUPPORT	1 1/4" x 1 1/4" x 1/4" ANGLE	2'-1 1/8"	2	SA/CSA-G40.21-44W
46	DRAIN BOTTOM	1'-10" x 3/8" PL x 3'-3 1/4" LG		2	SA/CSA-G40.21-44W
47	DRAIN BOTTOM	1'-5" x 3/8" PL x 2'-3 7/8" (SEE DETAIL)		1	SA/CSA-G40.21-44W
48	DRAIN SIDE	6" x 3/8" PL x 3'-3 1/4" LG (COPE AS REQUIRED)		2	SA/CSA-G40.21-44W
49	DRAIN SIDE	6" x 3/8" PL x 2'-3 7/8" (COPE AS REQUIRED)		1	SA/CSA-G40.21-44W
52	DRAIN PIPE	2" SCH STD SMLS PIPE x 8'-6 5/8" LG (COE x TOE)		1	SA-106B
53	DRAIN VALVE	2" CL 800 NPT BALL VALVE c/w PLUG		1	SA-105N
54	DRAIN END CAP	2 1/8"ø x 1/4" PL (CUT IN HALF)		1	SA/CSA-G40.21-44W
55	002-V-01-1610 BOLTINGS	1" ø x 4" LG CAPSCREW c/w (1) HEAVY HEX NUT EA		8	NOTE #14

NOTES:

1) ALL PRIMARY DIMENSIONS ARE IN INCHES AND ALL SECONDARY DEMENSIONS ARE IN MILLIMETERS 0'-0" [000]
2) TOP OF CHECKER PLATE REFERENCE ELEVATION 0'-0" [000].
3) ALL FABRICATION SHALL BE CARRIED OUT IN CWB APPROVED FABRICATION SHOPS AND MUST CONFORM TO CSA W47.1-09 AND CSA W59-03. ALL WELDS SHALL BE E7018 AND CONFORM TO CSA W48.1-M. FOR QUALITY OF WELD, REFER TO COMPANY CWB WELDING CERTIFICATION UNDER NUMBER 150-2/ SUBCONTRACTOR.
4) CHECKER PLATE SEAMS TO BE SEAL WELDED.
5) CHECKER PLATE PERIMETER TO BE STITCH WELDED.
6) CHECKER PLATE TO BE STITCH WELDED TO ALL SUPPORTS.
7) ALL GRATING TO BE BANDED AS REQUIRED & HOT DIP GALVANIZED.
8) DO NOT WELD GRATING. SHOP TO USE CLIPS THAT DO NOT HARM THE GALVANIZED FINISH.
9) FOR SANDBLASTING NOTES SEE E&I# 5B1108-02-EL-00-001
10) FOR PAINT NOTES SEE E&I# 5B1108-02-EL-00-001.
11) UNDERSIDE OF SKID TO RECEIVE 4" OF CLASS ONE URETHANE FOAM INSULATION.
12) SKID MUST BE ADEQUATELY SUPPORTED BY THE CUSTOMER IN THE FIELD.
13) MATERIAL SUBSTITUTIONS TO LOAD BEARING STRUCTURAL COMPONENTS SHALL BE SUBJECT TO ENGINEERING APPROVAL.
14) ALL BOLTING TO BE ASTM A325 AND A563DH MATERIAL.
15) LIFT LUG MATERIAL TO BE CSA G40.21-44WT CAT4. MINIMUM YIELD STRENGTH FOR LIFT LUGS = 44,000 PSI.
16) TOTAL APPROXIMATE BARE SKID MASS: 13 750 lbs (6250 kg).
17) REFER TO DRAWING 5B1108-02-DR-10-002 FOR PILE LOCATION AND LOADS.
18) REFER TO DRAWING 5B1108-02-DR-10-003 FOR CHECKER PLATE CUTOUT AND BASE PLATE DETAILS.
19) LIFT LUGS DESIGNED FOR VERTICAL LIFTS ONLY.

NO.	REVISION	BY	CHK	DATE
2	AS BUILT	TBB		06/05/14
1	REVISED ITEM #36 FOR BOLTHOLES DETAIL	RR		19/09/13
0	ISSUED FOR CONSTRUCTION	BS		09/09/13
C	RE-ISSUED FOR APPROVAL	BS		28/08/13
B	RE-ISSUED FOR APPROVAL	BS		20/08/13
A	ISSUED FOR APPROVAL	RR		31/05/13

PROFESSIONAL ENGINEER ALBERTA TREVOR W. FREEMAN 22949
June 19/14

CUSTOMER REFERENCE: #407014-00120

5Blue Process Equipment Inc.
www.5Blue.com

CUSTOMER: DEVON NEC CORPORATION
JOB NO.: 5B1108-10

PROJECT:
FERRIER CENTRAL OIL BATTERY – LIQUID EXTRACTION PLANT (LEP)
LOCATION: LSD 11-02-039-08 W5M

TITLE:
COMPRESSED CARDIUM GAS SEPARATOR PACKAGE (002-PK-01-1600)
17'-0" x 20'-0" LG w/ W10 @ 26# MAIN MEMBERS

DRAWN	CHK	APP'D	SCALE	DATE	DWG NO	SHT TTL
RR			AS SHOWN	23/05/13	5B1108-02-DR-10-001	003 / 2

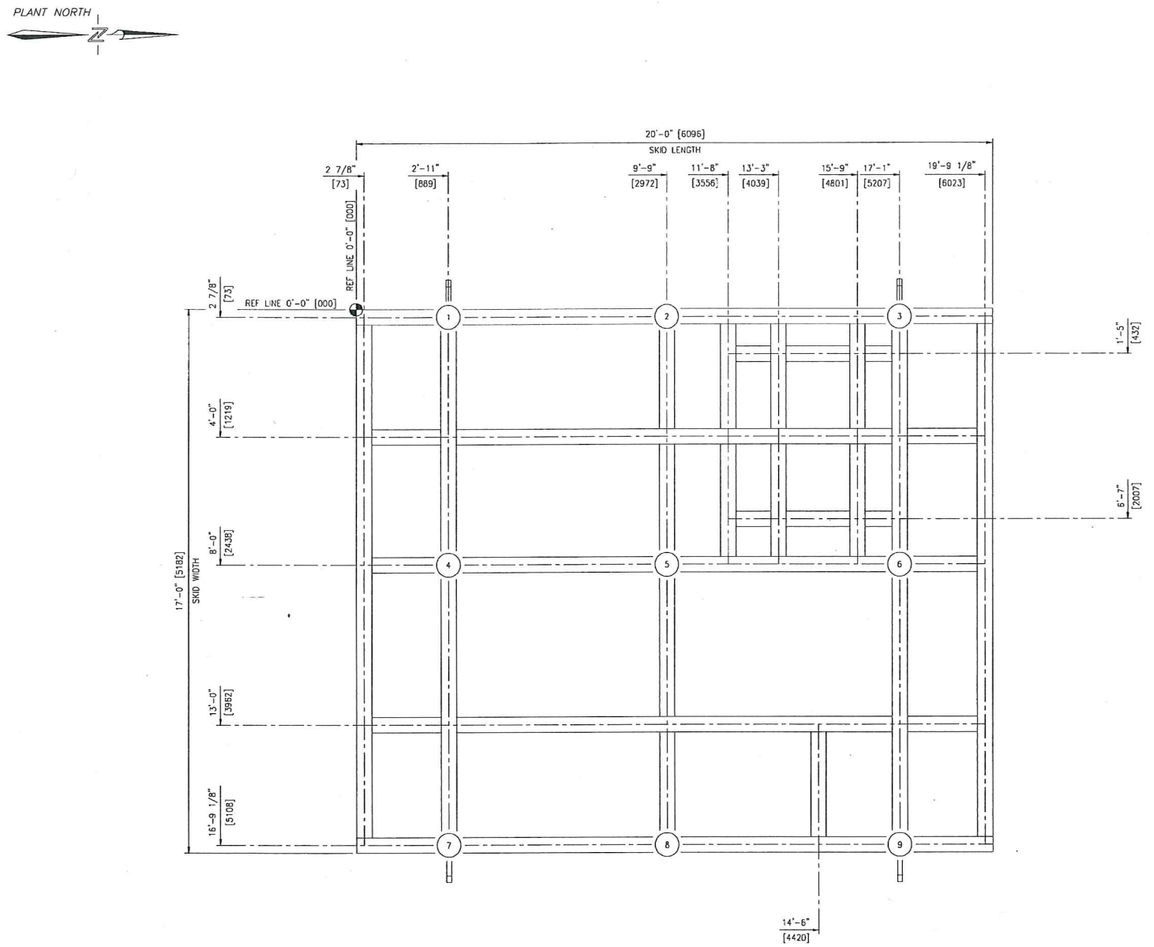

PLAN VIEW
SCALE 1/2"=1'-0"

PILE LOADING HYDROTEST						
PILE #	Fx (N/S) LOAD (kN)	Fx (N/S) LOAD (lb)	Fy (E/W) LOAD (kN)	Fy (E/W) LOAD (lb)	VERTICAL LOAD (kN)	VERTICAL LOAD (lb)
1	0.0	-7.9	0.0	-3.7	19.5	4377.5
2	0.1	26.4	-0.7	-155.7	41.1	9214.1
3	-0.1	-28.8	-0.1	-11.3	56.8	12729.7
4	0.0	3.5	0.0	5.9	25.7	5754.9
5	-0.1	-26.6	0.2	34.9	55.6	12465.3
6	0.0	-1.1	-0.1	-12.5	80.8	18113.4
7	-0.1	-15.7	0.1	19.2	27.1	6078.5
8	0.4	91.6	0.6	131.6	23.7	5316.2
9	-0.2	-41.5	0.0	-8.4	38.7	8672.9

PILE LOADING LIVE INFO						
PILE #	Fx (N/S) LOAD (kN)	Fx (N/S) LOAD (lb)	Fy (E/W) LOAD (kN)	Fy (E/W) LOAD (lb)	VERTICAL LOAD (kN)	VERTICAL LOAD (lb)
1	0.0	-2.9	0.0	-0.2	10.0	2250.2
2	0.0	-2.2	-0.4	-82.8	9.4	2103.1
3	0.0	8.4	-0.1	-12.3	9.6	2151.2
4	0.0	1.6	0.0	5.4	27.0	6052.0
5	-0.1	-21.9	-0.9	-190.8	47.3	10600.7
6	-0.1	-27.7	-0.1	-14.6	36.2	8124.4
7	0.0	-1.9	0.0	9.3	13.7	3063.6
8	0.0	7.0	1.3	295.3	19.8	4449.2
9	0.2	39.6	0.0	-9.4	15.1	3380.9

PILE LOADING SEISMIC Y (E-W) INFO						
PILE #	Fx (N/S) LOAD (kN)	Fx (N/S) LOAD (lb)	Fy (E/W) LOAD (kN)	Fy (E/W) LOAD (lb)	VERTICAL LOAD (kN)	VERTICAL LOAD (lb)
1	-0.3	-66.8	-1.4	-303.2	-0.3	-61.2
2	0.9	206.4	-3.0	-667.1	7.1	1588.9
3	-1.3	-299.4	-4.8	-1067.6	10.1	2259.7
4	0.0	7.5	-1.7	-383.0	1.0	229.6
5	-0.6	-139.8	-3.4	-762.0	-6.6	-1491.2
6	1.1	240.6	-5.0	-1123.5	-10.5	-2349.1
7	0.2	54.9	-1.4	-311.8	-0.7	-164.7
8	-0.2	-37.3	-1.5	-345.0	-0.5	-104.7
9	0.2	34.0	-1.8	-400.7	0.4	92.9

PILE LOADING WIND Y (E-W) INFO						
PILE #	Fx (N/S) LOAD (kN)	Fx (N/S) LOAD (lb)	Fy (E/W) LOAD (kN)	Fy (E/W) LOAD (lb)	VERTICAL LOAD (kN)	VERTICAL LOAD (lb)
1	-0.1	-14.8	-1.2	-276.6	5.4	1204.3
2	0.3	66.8	-2.1	-461.4	6.9	1554.1
3	-0.2	-39.1	-1.9	-432.2	5.8	1310.8
4	0.0	0.8	-2.1	-475.8	0.1	15.9
5	-0.3	-71.7	-2.9	-654.9	0.0	7.7
6	0.5	108.9	-2.4	-528.4	0.5	116.7
7	-0.1	-25.1	-5.9	-1331.5	-5.3	-1197.7
8	0.0	-1.7	-6.3	-1403.4	-7.2	-1605.4
9	-0.1	-24.0	-5.9	-1321.1	-6.3	-1406.5

PILE LOADING OPERATING INFO						
PILE #	Fx (N/S) LOAD (kN)	Fx (N/S) LOAD (lb)	Fy (E/W) LOAD (kN)	Fy (E/W) LOAD (lb)	VERTICAL LOAD (kN)	VERTICAL LOAD (lb)
1	0.0	-10.5	0.0	-6.8	21.2	4747.9
2	0.0	10.2	-0.5	-103.0	24.9	5577.8
3	0.0	1.8	0.0	-9.6	35.8	8028.5
4	0.0	3.9	0.0	1.5	27.4	6143.3
5	-0.2	-39.2	-0.1	-17.8	38.6	8651.3
6	0.0	0.7	0.0	-11.0	56.3	12630.8
7	-0.1	-14.6	0.1	16.1	27.0	6060.0
8	0.4	88.9	0.6	137.7	24.1	5409.3
9	-0.2	-41.1	0.0	-7.2	40.3	9039.7

PILE LOADING SEISMIC X (N-S) INFO						
PILE #	Fx (N/S) LOAD (kN)	Fx (N/S) LOAD (lb)	Fy (E/W) LOAD (kN)	Fy (E/W) LOAD (lb)	VERTICAL LOAD (kN)	VERTICAL LOAD (lb)
1	-1.3	-290.9	-0.3	-76.3	0.7	160.4
2	-2.8	-623.6	0.5	118.0	-9.1	-2041.6
3	-4.3	-964.7	-1.2	-272.4	7.9	1766.1
4	-1.7	-388.5	-0.2	-47.8	0.5	106.8
5	-2.8	-629.3	-0.5	-108.3	-9.8	-2205.0
6	-4.3	-959.2	1.6	367.4	10.3	2315.4
7	-1.4	-303.5	0.0	6.1	-0.3	-76.2
8	-2.4	-534.7	0.0	6.8	-2.0	-459.7
9	-3.0	-669.4	0.0	6.6	1.9	433.9

PILE LOADING WIND X (N-S) INFO						
PILE #	Fx (N/S) LOAD (kN)	Fx (N/S) LOAD (lb)	Fy (E/W) LOAD (kN)	Fy (E/W) LOAD (lb)	VERTICAL LOAD (kN)	VERTICAL LOAD (lb)
1	-2.5	-556.5	-2.9	-660.7	-3.0	-664.1
2	-0.7	-152.6	-2.2	-486.6	0.2	38.8
3	-1.3	-292.6	-2.5	-555.1	2.6	593.8
4	-6.6	-1473.5	-0.2	-53.6	-7.7	-1720.5
5	-1.1	-242.9	-0.3	-66.8	-0.1	-16.0
6	-1.7	-387.4	0.4	99.2	8.0	1795.9
7	-3.0	-674.4	3.0	682.5	-3.3	-740.2
8	-1.7	-388.1	2.3	520.1	-3.9	-885.1
9	-2.1	-476.8	2.3	520.9	7.1	1597.4

PILE LOADING SNOW INFO						
PILE #	Fx (N/S) LOAD (kN)	Fx (N/S) LOAD (lb)	Fy (E/W) LOAD (kN)	Fy (E/W) LOAD (lb)	VERTICAL LOAD (kN)	VERTICAL LOAD (lb)
1	0.0	-0.8	0.0	0.0	8.7	1953.9
2	0.0	-0.7	0.0	-2.0	10.8	2433.1
3	0.0	2.7	0.0	0.4	9.1	2043.6
4	0.0	0.0	0.0	-0.1	0.2	51.3
5	0.0	-1.2	0.0	1.6	-0.1	-11.3
6	0.0	0.1	0.0	0.4	0.2	37.4
7	0.0	-0.6	0.0	-0.2	8.7	1946.3
8	0.0	-0.6	0.0	-0.4	10.9	2451.0
9	0.0	1.2	0.0	0.3	9.1	2037.9

NOTES:

1) ALL DIMENSIONS ARE IN IMPERIAL, UNLESS OTHERWISE SPECIFIED.
2) DETERMINATION OF PILE LOADS IS BASED ON ELASTIC ANALYSIS AND NOT PLASTIC ANALYSIS.
3) PILE LOADS HAVE BEEN DERIVED BASED ON THE MAJOR INDIVIDUAL COMPONENT CENTRE OF GRAVITY. THE MAJOR INDIVIDUAL (OPERATING) COMPONENTS CONSIDERED FOR PILE LOAD DETERMINATION ARE:
   A) VESSEL
   B) BUILDING
   C) SKID
   D) PIPING
   E) OHS
   F) PLATFORMS
   G) VALVES
   H) HEATERS
4) THE MAXIMUM DEFLECTION AT ANY POINT ON THE 5B1108 SKID IS TBD.
5) LIVE LOAD IS BASED ON 100 lb/ft² (4.8 kPa).
6) SEISMIC HORIZONTAL SHEAR LOADING IS BASED ON TOTAL OPERATING LOADS.
7) WIND HORIZONTAL SHEAR LOADING IS BASED ON A WIND LOAD OF 0.5 kPa. (BASED ON SITE CONDITIONS)
8) THE FINAL DRY WEIGHT OF THE CARDIUM GAS SEPARATOR PACKAGE (5B1108) IS 50 500 lb.
9) THE FINAL OPERATING WEIGHT OF THE CARDIUM GAS SEPARATOR PACKAGE (5B1108) IS TBD.
10) THIS OPERATING PILE LOAD DIAGRAM IS TO BE STAMPED BY AN ALBERTA PROFESSIONAL ENGINEER.

PROFESSIONAL ENGINEER ALBERTA
TREVOR W. FREEMAN
#

June 19/14

NO.	REVISION	BY	CHK	DATE
1	AS BUILT	TBB	TB	06/05/14
0	ISSUED FOR PILE DESIGN	SF	TB	07/10/13
A	ISSUED FOR PRELIMINARY PILE DESIGN	SF		16/08/13

5Blue Process Equipment Inc.
www.5Blue.com

CUSTOMER REFERENCE: 407014-00120
CUSTOMER: DEVON NEC CORPORATION
JOB NO.: 5B1108-10
PROJECT: FERRIER CENTRAL OIL BATTERY – LIQUID EXTRACTION PLANT (LEP)
LOCATION: LSD 11-02-039-08 W5M
TITLE: CARDIUM GAS SEPARATOR PACKAGE (002-PK-01-1600)
PILE LOCATION AND LOADS

DRAWN	CHK	APP	SCALE	DATE	DWG NO	SHT TTL	
SF	TB	TB	1/2"=1'-0"	15/08/13	5B1108-02-DR-10-002	002	1

BILL OF MATERIAL					
MARK	DESCRIPTION	LONG ANNOTATION	LENGTH	QTY	MATERIAL
61	FLOORING	4'-0" WIDE x 1/4" THK CHECKER PL (SEE DETAIL)	20'-0"	1	SA/CSA-G40.21-44W
62	FLOORING	4'-0" WIDE x 1/4" THK CHECKER PL (SEE DETAIL)	20'-0"	1	SA/CSA-G40.21-44W
63	FLOORING	5'-0" WIDE x 1/4" THK CHECKER PL (SEE DETAIL)	20'-0"	1	SA/CSA-G40.21-44W
64	FLOORING	4'-0" WIDE x 1/4" THK CHECKER PL	20'-0"	1	SA/CSA-G40.21-44W

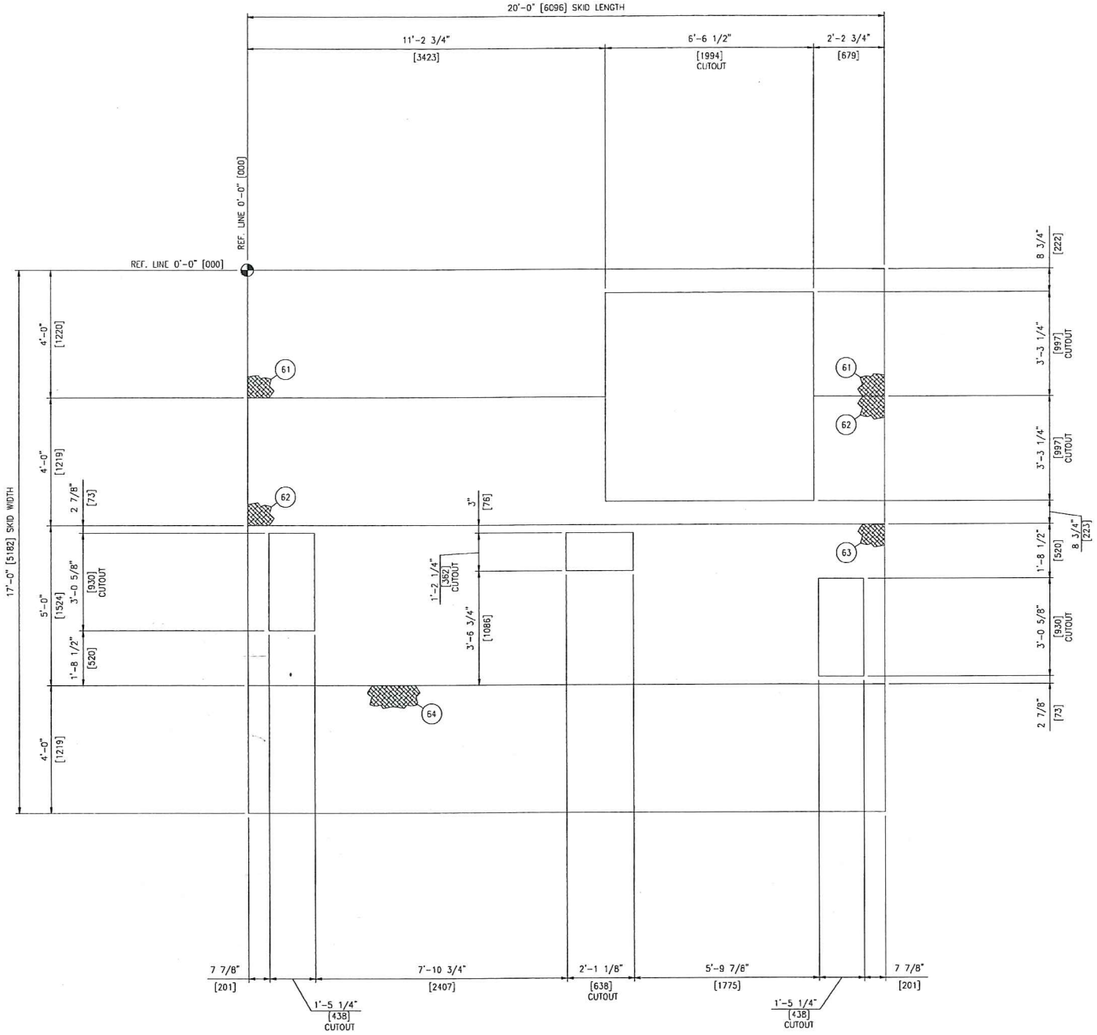

CHECKER PLATE PLAN VIEW
SCALE 1/2"=1'-0"

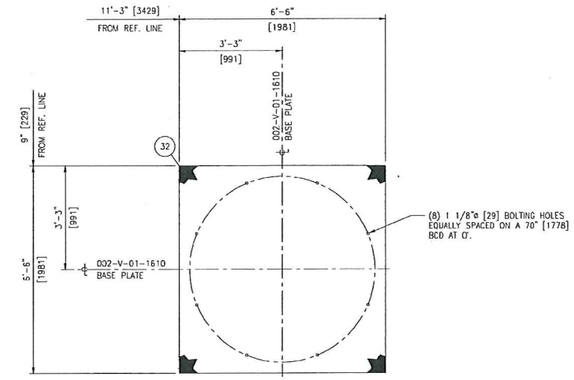

ITEM# 32 DETAIL
SCALE 1/2"=1'-0"
(1) REQUIRED

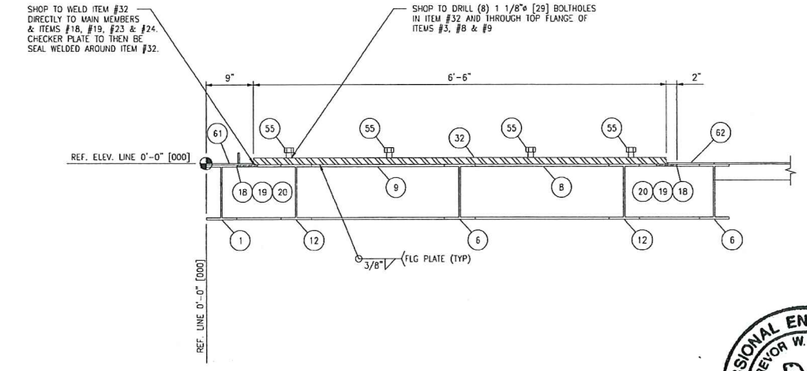

B 001 SECTION 'B-B' B 001
SCALE: 1"=1'-0"
LOOKING NORTH

NOTES

1) ALL PRIMARY DIMENSIONS ARE IN IMPERIAL AND ALL SECONDARY DIMENSIONS ARE IN MILLIMETERS 0'-0" [000].
2) REFER TO DRAWING 5B1108-02-DR-10-001 FOR SKID LAYOUT AND FABRICATION NOTES.
3) REFER TO DRAWING 5B1108-02-DR-10-002 FOR PILE LOCATION AND LOADS.

NO.	REVISION	BY	CHK	DATE
1	AS BUILT	TBB		06/05/14
0	ISSUED FOR CONSTRUCTION	BS		10/09/13
B	RE-ISSUED FOR APPROVAL	BS		28/08/13
A	ISSUED FOR APPROVAL	RR		20/08/13

PROFESSIONAL ENGINEER ALBERTA TREVOR W. FREEMAN
June 19/14

CUSTOMER REFERENCE: #407014-00120
5Blue Process Equipment Inc.
www.5Blue.com

CUSTOMER: DEVON NEC CORPORATION
JOB NO.: 5B1108-10
PROJECT: FERRIER CENTRAL OIL BATTERY - LIQUID EXTRACTION PLANT (LEP)
LOCATION: LSD 11-02-039-08 W5M
TITLE: COMPRESSED CARDIUM GAS SEPARATOR PACKAGE (002-PK-01-1600)
CHECKER PLATE CUTOUT & BASE PLATE DETAILS

DRAWN	CHK	APP	SCALE	DATE	DWG NO	SHT TTL
RR			AS SHOWN	05/23/13	5B1108-02-DR-10-003	003

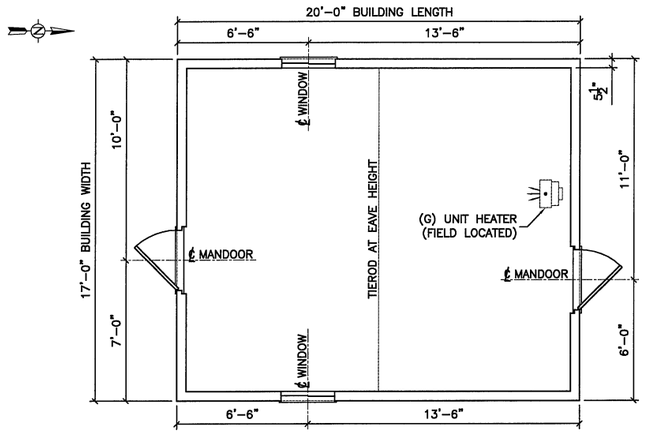

FLOOR PLAN VIEW

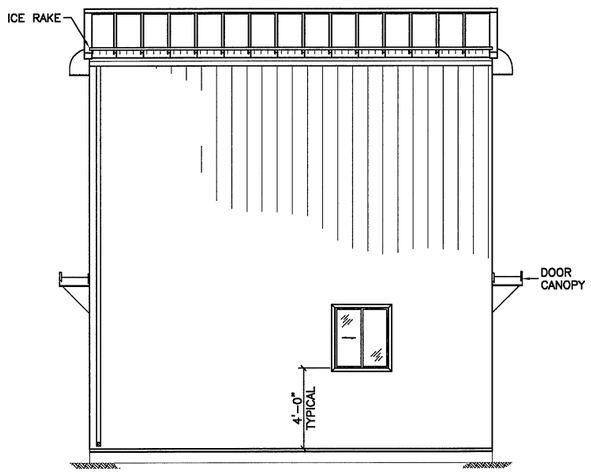

WEST ELEVATION

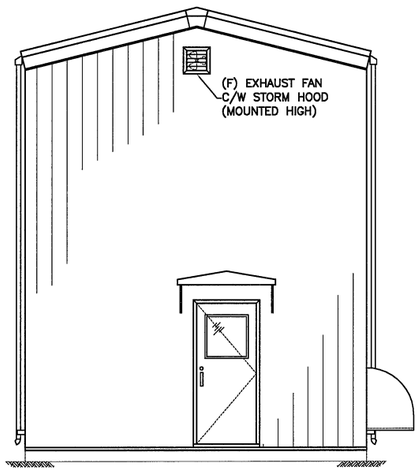

SOUTH ELEVATION

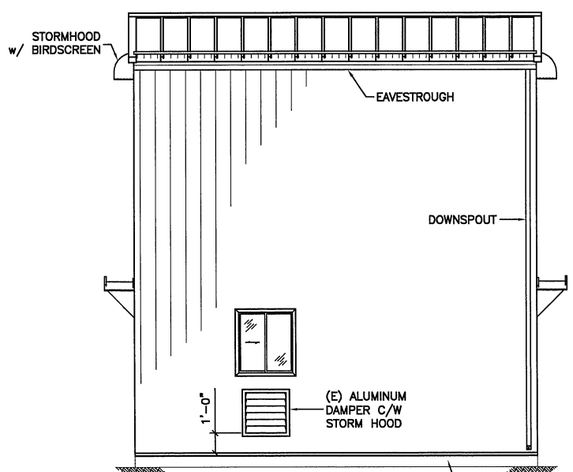

EAST ELEVATION

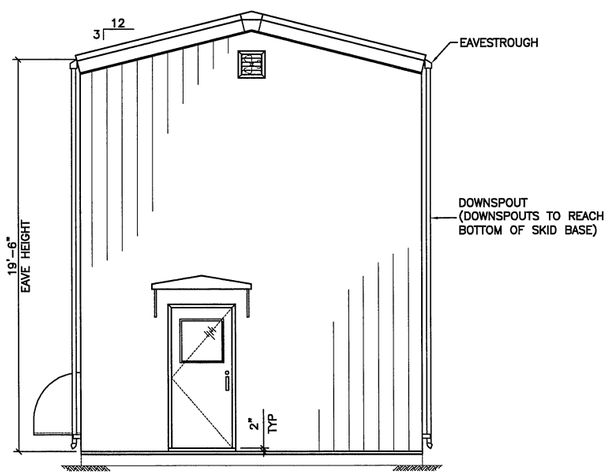

NORTH ELEVATION

ROOF CONSTRUCTION:

-22 GA. PREPAINTED STEEL INTERLOCKING STRUCTURAL RIB ROOF PANELS. C/W 8000 SERIES PAINT SYSTEM, TO COLOUR: STONE GREY (QC-8305)
-26ga. STEEL INSULATION RIBS AT ROOF PANEL JOINTS.
-R30 (9") FIBREGLASS BATT INSULATION.
-6 MIL POLY VAPOUR BARRIER.
-24 GA. PREPAINTED ALUMINUM, FLUTED PROFILE LINER PANELS, TO COLOR: WHITE

ALMAC ROOF PANEL

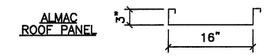

WALL CONSTRUCTION:

-22 GA. PREPAINTED STEEL INTERLOCKING STRUCTURAL RIB WALL PANELS, C/W 8000 SERIES PAINT SYSTEM, TO COLOUR: STONE GREY (QC-8305)
-R20 (6") FIBREGLASS BATT INSULATION.
-6 MIL POLY VAPOUR BARRIER.
-22 GA. ZEE-BAR RIB STIFFERNERS AT EVERY WALL PANEL RIB.
-24 GA. PREPAINTED ALUMINUM, FLUTED PROFILE LINER PANELS, TO COLOR: WHITE

ALMAC WALL PANEL

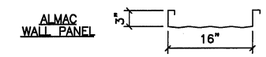

TRIM COLOURS:

-GABLE FLASHING AND ALL NOTED FLASHINGS ARE TO BE FORMED FROM 8000 SERIES PREPAINTED STEEL MATERIAL, TO COLOUR: SLATE BLUE (QC-8260)

ACCESSORIES:

(A) TWO ONLY 3'-0" x 7'-0" STEEL INSULATED EXTERIOR WALK-IN DOOR C/W HARDWARE AS FOLLOWS:
*DOOR LEAF-16ga. STEEL 45mm THK POLY-URETHANE CORE (R12)
*DOOR FRAME-16ga. PRESSED STEEL (KNOCKDOWN)
*BUTT HINGES (3)-"STANLEY" #BB1409 x 114x102 x 26D
*PANIC HARDWARE-"VON DUPRIN" #44TP
*LOCK CYLINDER-"DOREX" #501 KA x C26D
*HYDRAULIC CLOSURE-"SHANAHANS" SH-1003-BCX x 689
*GLASS-24" x 24", DOUBLE GLAZED I.W.G.
*CHECKCHAIN-"CANAROPA" #3548
*THRESHOLD-"PEMKO" #1700A (ALUMINUM)
*WEATHERSTRIP-"PEMKO" #306AV (ALUM./VINYL)
*SWEEP-"PEMKO" #315CN (ALUM./NEOPRENE)
*22ga. SHEETMETAL CANOPY, TO COLOR: STONE GREY (QC-8305)

DOOR LEAF FINISH: SLATE BLUE (QC-8260)
DOOR FRAME FINISH: SLATE BLUE (QC-8260)

(B) TWO ONLY 2'-8" WIDE x 3'-0" HIGH (NOM. SIZE), DOUBLE GLAZED ALUMINUM SLIDING WINDOW C/W LOCK AND FIBERGLASS CLOTH HALF SCREEN AND PLAIN GLASS.
FRAME FINISH: MILL FINISH ALUMINUM

(C) TWO ONLY 20'-0" LONG, EAVESTROUGHING ASSEMBLIES C/W ONE DOWNSPOUT ASSEMBLY PER SIDE.
EAVESTROUGH FINISH: SLATE BLUE (QC-8260)
DOWNSPOUT FINISH: STONE GREY (QC-8305)

(D) TWO ONLY 20'-0" LONG CONTINUOUS ROOF ICE RAKES ASSEMBLIES.
FINISH: TO MATCH ROOF PANELS

HVAC EQUIPMENT:

(E) ONE ONLY 2'-0" WIDE x 2'-0" HIGH, PARALLEL BLADE ALUMINUM DAMPER, "WESTVENT" MODEL NO. PBX-4L6 C/W FLANGE FRAME, "BELIMO" 120V MODEL NO. NFBUP-S ACTUATOR, "BELIMO" MODEL NO. ZS260 EXPLOSION PROOF ENCLOSURE AND STORM HOOD W/ BIRDSCREEN.
HOOD FINISH: STONE GREY (QC-8305)

(F) TWO ONLY WALL MOUNTED EXPLOSION PROOF EXHAUST FAN, "RUFFNECK" MODEL NO. EFX-12A-2H, C/W 575V/60hz/3ph, 1/2hp T3B MOTOR, BACKDRAFT DAMPER, GUARDS, TERMINAL BOXES AND STORM HOOD W/ BIRDSCREEN. (CLASS I DIV 1 & II GROUP C & D) (FAN IS CAPABLE OF 850cfm)
HOOD FINISH: STONE GREY (QC-8305)

(G) ONE ONLY 70KW GLYCOL UNIT HEATER, "RUFFNECK" MODEL NO. AH-20A-A5, C/W 575V/60hz/3ph EXPLOSION PROOF MOTOR AND REMOTE THERMOSTAT (CLASS I DIV 1 & II GROUP C & D)

PERMIT TO PRACTICE
HO & LAVIOLETTE ENGINEERING LTD.
Signature
02/24/13
PERMIT NUMBER: P 03171
The Association of Professional Engineers, Geologists and Geophysicists of Alberta

CONSTRUCTION NOTES:

1. ALL EXTERIOR SCREWS ARE TO BE CADMIUM PLATED (UN-PAINTED).
2. INTERIOR LINER SCREWS ARE TO BE PAINTED TO MATCH LINER MATERIAL, TO COLOUR: WHITE
3. BUILDING PACKAGE IS TO INCLUDE BASE FLASHING AND INTERIOR FLASHING FOR 2" HIGH CONTAINMENT DRIP LIP.

BUILDING MATERIAL SPECIFICATIONS
PREPAINTED STEEL c/w GALVANIZED SUBSTRATE – A653, G90, Gr 37 c/w GALVALUME SUBSTRATE – A792, AZ150, Gr 37
PLAIN GALVANIZED STEEL – A653, G90, Gr 37
PLAIN GALVALUME STEEL – A792, AZ165, Gr 37

BUILDING DESIGN LOADS (kPa) – ROCKY MOUNTAIN HOUSE, AB LOADS (ABC 2006)
GROUND SNOW LOAD – Ss = 1.90, Sr = 0.10
WIND LOAD q1/10 = 0.33, q1/50 = 0.50
SEISMIC ZONE – Sa(0.2) = 0.150, Sa(0.5) = 0.080, Sa(1.0) = 0.040
Sa(2.0) = 0.020, PGA = 0.080
IMPORTANCE FACTOR = 1.00 U.N.O.

REV.	DESCRIPTION	BY	DATE
4			
3			
2			
1	REVISED AS PER CUSTOMER MARK-UPS (ISSUED FOR CONSTRUCTION)	KM	2013/10/16
0	ISSUED FOR APPROVAL	MP	2013/08/21

Almac Metal Industries Ltd.
6140-76th AVENUE
EDMONTON, ALBERTA
T6B 0A6
PHONE: (780) 465-0861
FAX: (780) 465-4198

5B1108-02-DR-85-001 Rev 0

CLIENT:	5 BLUE PROCESS EQUIPMENT INC.	DRAWN BY: MP	CHECKED BY:
TITLE:	DEVON NEC CORP. – FERRIER CENTRAL OIL BATTERY – CARDIUM INLET SEPARATOR PKG.	SCALE: 1/8" = 1'-0"	
		DATE: 2013/08/21	
LOCATION:	LSD: 11-02-039-08 W5M	JOB NUMBER	SHEET
SHEET DESCRIPTION:	PLAN AND ELEVATION VIEWS	13989	B1 REV. 1

REF# 5B1108-30

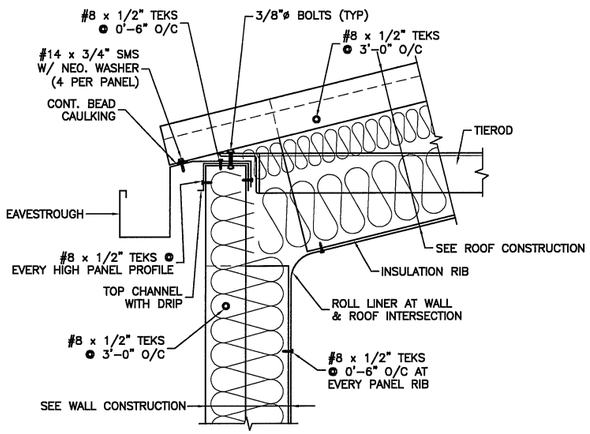

EAVE DETAIL

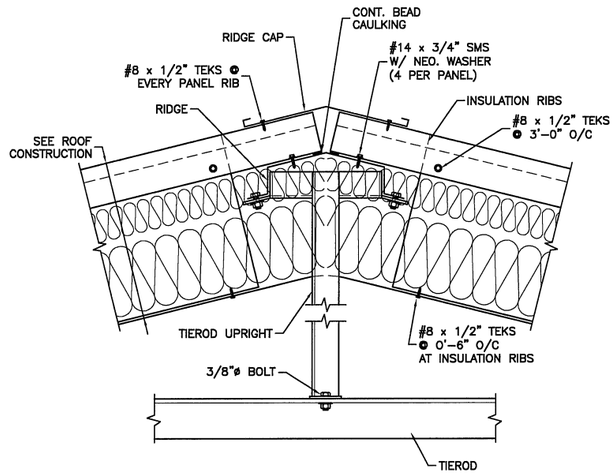

RIDGE DETAIL

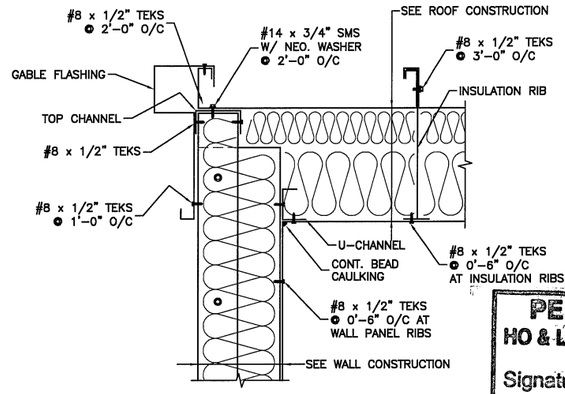

GABLE DETAIL



PERMIT TO PRACTICE
HO & LAVIOLETTE ENGINEERING LTD.
Signature
Date Oct. 23/13
PERMIT NUMBER: P 03171
The Association of Professional Engineers, Geologists & Geophysicists of Alberta

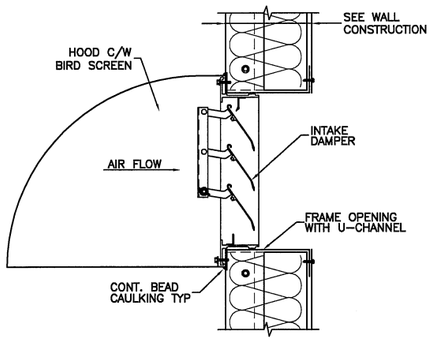

DAMPER DETAIL

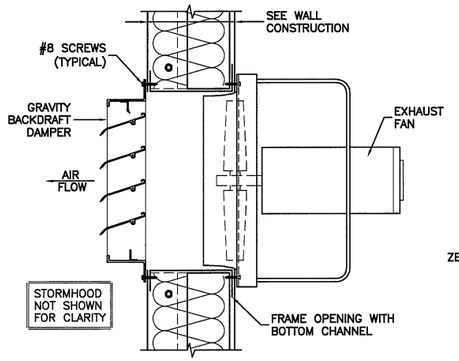

EXHAUST FAN DETAIL

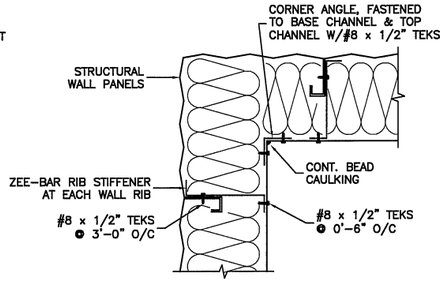

BUILDING CORNER DETAIL

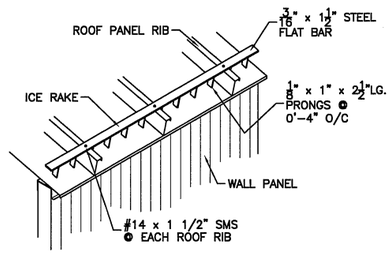

ICE RAKE DETAIL

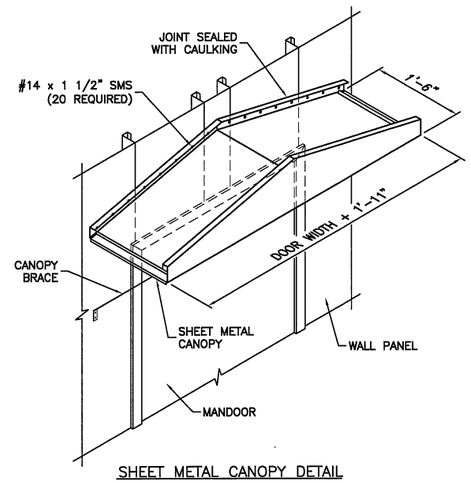

SHEET METAL CANOPY DETAIL

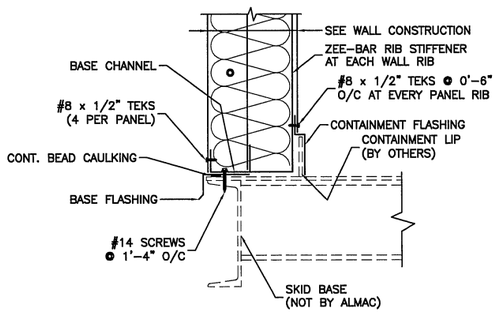

BASE DETAIL

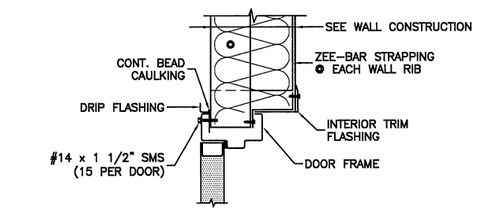

HEADER

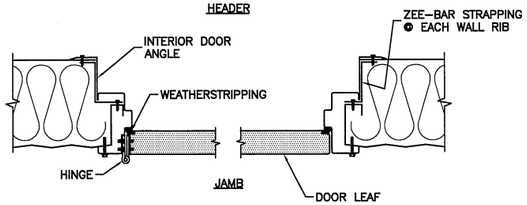

MANDOOR DETAIL

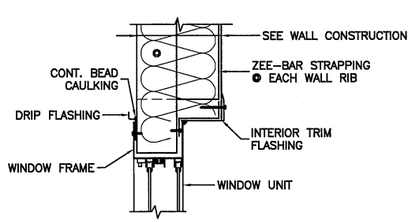

HEADER

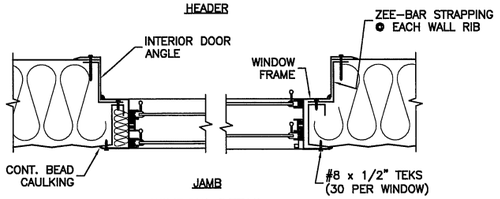

WINDOW DETAIL

REV.	DESCRIPTION	BY	DATE
1	REVISED AS PER CUSTOMER MARK-UPS (ISSUED FOR CONSTRUCTION)	KM	2013/10/16
0	ISSUED FOR APPROVAL	MP	2013/08/21

Almac Metal Industries Ltd.
6140-76th AVENUE, EDMONTON, ALBERTA T6B 0A6
PHONE: (780) 465-0861 FAX: (780) 465-4198

5B1108-02-DR-85-002 Rev 0

CLIENT:	5 BLUE PROCESS EQUIPMENT INC.	DRAWN BY: MP	CHECKED BY:
TITLE:	DEVON NEC CORP. – FERRIER CENTRAL OIL BATTERY – CARDIUM INLET SEPARATOR PKG.	SCALE: NTS	
		DATE: 2013/08/21	
LOCATION:	LSD: 11-02-039-08 W5M	JOB NUMBER	SHEET
REF# 5B1108-30	SHEET DESCRIPTION: TYPICAL BUILDING DETAILS	13989	B2 REV. 1

A8 Supports or Foundation Load Diagram

2303-8th Street, Nisku Alberta, T9E-7Z3 CANADA

5Blue
Process Equipment Inc.

See section A7

A9 Shipping Weights and Dimensions

2303-8th Street, Nisku Alberta, T9E-7Z3 CANADA

Devon Ferrier Central Processing Facility - Shipping List

VENDOR: 5Blue Process Equipment Inc.	MR/PO: 5B1108	
Equipment Description	Description	Qty
Vessel, Building & Skid Overall: 18'-10" W x 20'-10" L x 26'-0" H	Total mass approximately: 50,000 lbs (22,727 kg)	1
Box #1		
14" 150# CGI Gaskets		1
14" 300# CGI Gaskets		2
Box #2		
1" x 6-1/4" B7 Studs c/w Nuts		12
Box #3		
1-1/8" x 7" B7 Studs c/w Nuts		20
Box #4		
1-1/8" x 7-1/2" B7 Studs c/w Nuts		20
Box #5 (Spool 7A)		
2" 150# CGI Gaskets		2
5/8" x 3-1/4" B7 Studs c/w Nuts		8
Loose Items in the Building		
Door Canopy's c/w screws		2
Meter Run Internals		1

A10 Lifting Diagram / Instructions

2303-8th Street, Nisku Alberta, T9E-7Z3 CANADA

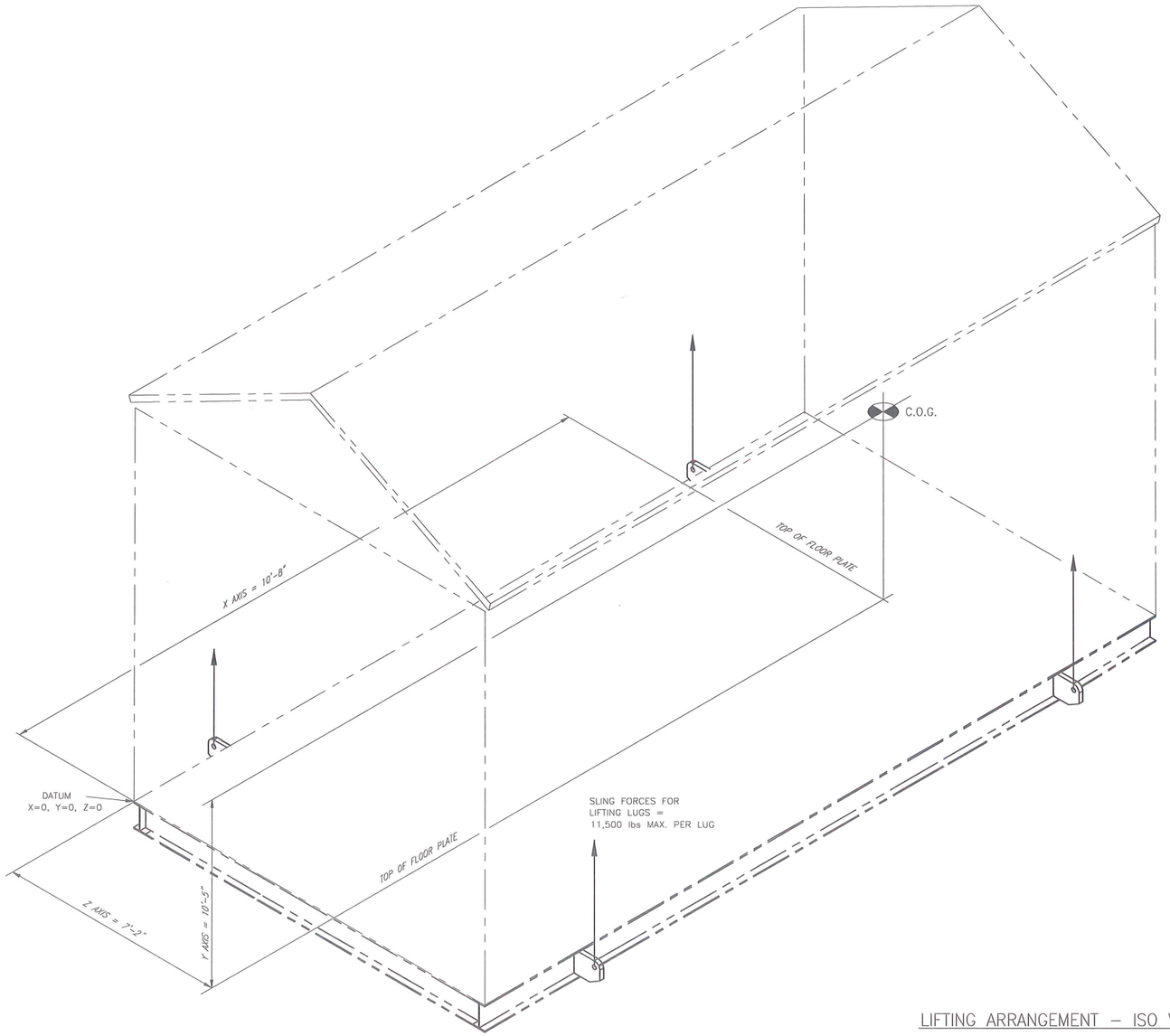

1.) ESTIMATED UNIT SHIPPING MASS:
ESTIMATED SHIPPING MASS OF COMPRESSED CARDIUM GAS SEPARATOR PACKAGE: 50,000 lbs [22,727 kg]
2.) UNIT SHIPPING DIMENSIONS:
OVERALL SHIPPING DIMENSIONS OF COMPRESSED CARDIUM GAS SEPARATOR PACKAGE: 18'-10" WIDE x 23'-8" HIGH x 20'-10" LONG
3.) USE 4 LIFTING LUGS FOR LOADING AND UNLOADING.

LIFTING ARRANGEMENT – ISO VIEW

PROFESSIONAL ENGINEER ALBERTA
ALEXANDER PINEDA AMAYA
DEC 1/14

NO.	REVISION	BY	CHK	DATE
0	ISSUED FOR TRANSPORTATION STUDY	RMc	ROW	01/12/14

CUSTOMER REFERENCE: #407014-00120

5Blue Process Equipment Inc.
www.5Blue.com

CUSTOMER: DEVON NEC CORPORATION
JOB NO. 5B1108-30
PROJECT: FERRIER CENTRAL OIL BATTERY – LIQUID EXTRACTION PLANT (LEP)
LOCATION: LSD 11-02-039-08 W5M
TITLE: COMPRESSED CARDIUM GAS SEPARATOR PACKAGE (002-PK-01-1600)
LIFTING ARRANGEMENT – ISO VIEW

DRAWN	CHK	APP	SCALE	DATE	DWG NO	SHT TTL	
RMc	ROW	JM	NTS	01/12/14	5B1108-02-DR-30-005	5	0

A11 Centre of Gravity of Each Lift

2303-8th Street, Nisku Alberta, T9E-7Z3 CANADA

5Blue
Process Equipment Inc.

See section A10

A13 Facsimile of Nameplate Stamping

2303-8th Street, Nisku Alberta, T9E-7Z3 CANADA


CERTIFIED BY :
5Blue Process Equipment Inc.
2303-8 St, Nisku, Alberta, Canada · Phone 780.955.2040
www.5Blue.com
U
W
RT-1
A627060
SERIAL No.
5B1108-20
YEAR BUILT
2013
DESCRIPTION
CARDIUM GAS SEPARATOR
MAWP
200 PSI
DESIGN TEMP.
302 F
MDMT
-50F @200PSI
EXT. MAWP
15 PSI
EXT. DESIGN TEMP.
302 F
CRN
W2983.2
CORR. ALLOWANCE
0.125 IN
SHELL THK
0.625IN MIN
SHELL MATERIAL
SA-516-70N
TAG. No.
002-V-01-1610
HEAD THK
0.531 IN MIN
HEAD MATERIAL
SA-516-70N

A14 Datasheet for Major Equipment

2303-8th Street, Nisku Alberta, T9E-7Z3 CANADA

VESSEL DATA SHEET

SHT 1 OF 2

CLIENT	Devon Canada	REQ NO.	407014-00120
PROJECT	Ferrier Central Processing Facility (Job 5B1108)	ITEM NO.	002-V-01-1610
FABR. SPEC	DEVON GS-3310	SERVICE	Compressed Cardium Gas Seperator
MANUFACTURER	5Blue Process Equipment Inc.	REGISTRATION NO.	

DESIGN DATA

REGISTERED	Yes with CRN	PROVINCE OF	Alberta	
OPERATE (internal)	703	kPag @	13	°C
OPERATE (external)	90	kPag @	15 to 40	°C
DESIGN (internal)	1,379	kPag @	150	°C
DESIGN (external)	Full Vacuum	kPag @	150	°C

MINIMUM DESIGN METAL TEMPERATURE (°C): -45

STRESS RELIEF: N/A — WHY:

RADIOGRAPHY: UW-11a — JOINT EFF — SHELL (%): 100% — HEAD (%): 100%

WIND VELOCITY (km/h): 100 — EARTHQUAKE ZONE: per NBC

ALTITUDE (m): 1025 — Barometric (kPaa): 90 — SNOW LOAD (kg/m2): Per NBC

AMBIENT TEMPERATURE (°C): -40 / +35

- [x] ASME VIII DIV I
- [ ] ASME VIII DIV II
- [x] SWEET SERVICE
- [ ] SOUR SERVICE
- [ ] HORIZONTAL
- [x] VERTICAL

WEIGHT

LESS INTERNALS (kg)	4507	INTERNALS WT (kg)	600
OPERATING WT (kg)	6903	HYDROTEST WT (kg)	14,760

	SHELL	HEADS
TYPE	Rolled Plate	SE 2:1
ASME MATERIAL	SA-516-70N	SA-516-70N
DESIGN THICKNESS (mm)	15.9	15.9
CORROSION ALLOW (mm)	3.2	3.2
TOTAL MIN THICK (mm)	15.9	13.5

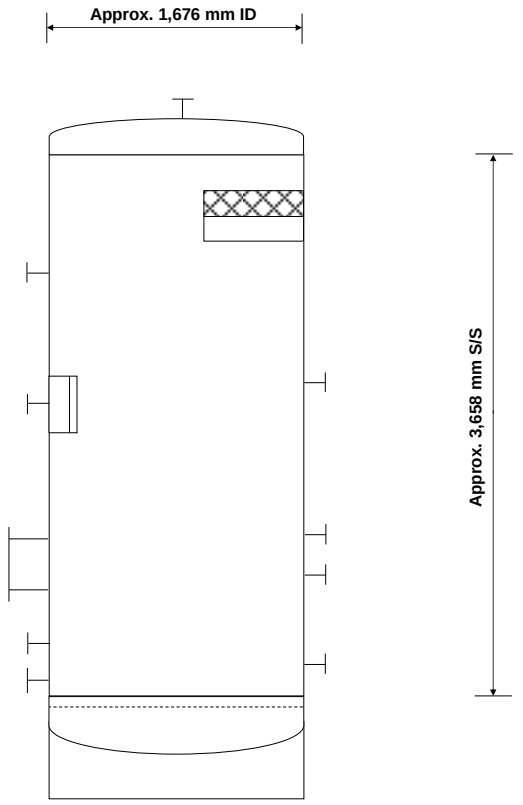

FABRICATOR TO PROVIDE

[x]	SKIRT & BASE RING	[ ]	SUPPORT GRID	
[ ]	LEGS	[ ]	PIPE COIL	
[ ]	SADDLES	[x]	LIFTING LUGS	
[x]	PLATFORM CLIPS	[ ]	TAILING LUG	
[x]	PLATFORMS	[x]	SAND BLASTING	
[x]	LADDER CLIPS	[x]	EXTERNAL PAINTING	
[x]	LADDERS	[x]	INTERNAL COATING	
[x]	INSULATION RINGS	[x]	GROUND LUG	(1) - 2"x3/8"FBx2"LG
[x]	PIPE SUPPORT CLIPS	[x]	INLET DIVERTER	N1
[x]	PIPE SUPPORTS	[ ]	SPECIAL NOZZLE BKR	
[ ]	TOP DAVIT	[x]	VORTEX BREAKER	N4
[x]	MANWAY DAVIT & RUNGS	[ ]	SYPHON DRAIN	
[ ]	MANWAY HINGE	[x]	STUDS & NUTS	M1
[ ]	PAINTERS TROLLEY	[x]	GASKETS	M1
[ ]	TRAY SUPPORT RINGS	[x]	BLIND FLANGES	M1
[ ]	SEAL PAN SUPPORT	[ ]	INSULATION	
[x]	VANE PACK	[ ]	GLYCOL TRACING	
[x]	VANE PACK SUPPORT	[ ]	ELEC. HEAT TRACING	
[ ]	DOWNCOMER SUPPORTS	[ ]		
[ ]	ANCHOR BOLT CHAIRS	[ ]		

CONNECTION SCHEDULE

MARK	SIZE	QTY	SERVICE	RATING	TYPE	MARK	SIZE	QTY	SERVICE	RATING	TYPE
N1	16"	1	Inlet	150#	RFHB	N11	2"	1	Spare	300#	RFLWN
N2	16"	1	Gas Outlet	150#	RFHB	N12	4"	2	Anode	150#	RFLWN
N3	4"	1	Liquid Outlet	150#	RFSCH160	N13	2"	1	Purge	300#	RFLWN
N4	2"	1	Drain	150#	RFSCH160						
N5	6"	1	PSV	150#	RFLWN	M1	20"	1	Manway	150#	RFHB
N6A/B	2"	2	LIT-1610	300#	RFLWN						
N7A/B	2"	2	LIT-1610B	300#	RFLWN						
N8	2"	1	PG-1610D/PIT-1610C	300#	RFLWN						
N9	2"	1	TIT/TE/TW-1610A	300#	RFLWN						
N10	2"	1	TG/TW-1610B	300#	RFLWN						

REMARKS: BALANCE OF INFORMATION TO BE PROVIDED BY VENDOR

1-1 VENDOR to confirm Vessel dims, nozzle sizes and quantities to meet Process guarantees.

1-2 See drawing number 5B1108-02-DR-20-001 to reference vessel tags.

JOB NO. 5B1108

DATA SHEET NO.

Description	REV	DATE	MECH	PROC	CHKD	APPR
Inlet Separator	0					

A

VESSEL PROCESS DESIGN SHEET

SHT 2 OF 2

CLIENT *Devon Canada* REQ. NO. *407014-00120*

PROJECT *Ferrier Central Processing Facility (Job 5B1108)* ITEM NO. *002-V-01-1610*

FABR. SPEC SERVICE *Compressed Cardium Gas Seperator*

OPERATING CASE			CASE 1	CASE 2	
Fluid					
Operating Pressure	Max/Norm/Min	kPag	800/700/600		
Operating Temperature	Max/Norm/Min	°C	53/43/23		
Design Pressure		kPag	1379		
Design Temperature	Min/Max	°C	-45/150		
Slug/Surge Volume		m^3	-		
Hazard Level			Class 1, Div 2		
GAS					
Mass Flowrate		kg/hr	52,920		
Density	(@ P & T)	kg/m^3	6.83		
Viscosity		cP	0.012		
Molecular Weight			-		
LIQUID HYDROCARBON					
Volume Flowrate		BBL/day	12.6		
Density	(@ P & T)	kg/m^3	613		
Viscosity		cP	0.21		
Surface Tension		dyne/cm	-		
LIQUID AQUEOUS					
Volume Flowrate		BBL/day	-		
Density	(@ P & T)	kg/m^3	-		
Viscosity		cP	-		
VESSEL					
Horizontal / Vertical			Vertical		
Shell Diameter ID		mm	1,676.0		
Shell seam to seam length		mm	3,658.0		
BOOT					
Diameter		mm	-		
Height		mm	-		
INTERNALS					
Demister Type			Vane Pack		
Vortex Breaker Required			Yes		
Other Internals			Float Shield, 2x Annodes		
COMPOSITION					

Component	Vapour Phase mol fraction
CO2	0.008
H2S	0.000000
N2	0.0041
C1	0.7632
C2	0.1074
C3	0.0682
iC4	0.009
nC4	0.0201
iC5	0.0067
nC5	0.0045
C6	0.0045
C7	0.0021
H2O	0.0019
Oil (38 deg API)	

NOTE

5-1) Seller to size this equipment as 2-phase separator.

5-2) Seller to recommend and provide any internals to facilitate proper operation.

WorleyParsons resources & energy

JOB NO. *5B1108*

DATA SHEET NO.

Description	REV	DATE	MECH	PROC	CHKD	APPR
Inlet Separator	0	0	0	0	0	0
0	0	0	0	0	0	0
0	0	0	0	0	0	0

FORM U-1A MANUFACTURER'S DATA REPORT FOR PRESSURE VESSELS (A627060

(Alternative Form for Single Chamber, Completely Shop or Field Fabricated Vessels Only)

As Required by the Provisions of the ASME Boiler and Pressure Vessel Code Rules, Section VIII, Division 1

1. Manufactured and certified by 5Blue Process Equipment Inc. 2303-8th Street, Nisku Alberta, Canada, T9E-7Z3
(Name and address of Manufacturer)

2. Manufactured for DEVON NEC CORPORATION. #400, 3 Ave Suite 2000 Calgary, Alberta T2P 4H2, Canada
(Name and address of Purchaser)

3. Location of installation Ferrier Central Processing Facility Central Oil Battery – Separation and Treatment LSD: 11-02-038-08W5M
(Name and address)

4. Type:

Vertical	5B1108-20	W2983.2	5B1108-02-DR-20-001 Rev.7	N/A	2013
(Horizontal or vertical, tank)	(Manufacturer's serial number)	(CRN)	(Drawing number)	(National Board number)	(Year built)

5. The chemical and physical properties of all parts meet the requirements of material specifications of the ASME BOILER AND PRESSURE VESSEL CODE. The design, construction, and workmanship conform to ASME Rules, Section VIII, Division 1 2010 edition (Year)

to 2011a ([Addenda, if applicable (Date)]) n/a (Code Case numbers) n/a ([Special Service per UG-120(d)])

6. Shell

SA-51670N	0.625"	0.125"	66" ID	12'-0"S/S
(Material spec. number, grade)	(Nominal thickness)	(Corr. Allow.)	(Inner diameter)	[Length (overall)]

7. Seams:

TYPE 1	Full	100%	NONE	N/A	TYPE 1	Full	100%	2
[Long. (welded, dbl, sngl, lap, butt)]	[R.T. (Spot or Full)]	(Eff., %)	(H.T. temp.) (°F)	(Time, hr)	[Girth (welded, dbl., sngl., lap, butt)]	[R.T. (Spot or full)]	(Eff.,%)	(No. of Courses)

8. Heads: (a) Material SA-51670N (Spec. no., grade) (b) Material SA-51670N (Spec. no., grade)

	Location (Top, Bottom, Ends)	Minimum Thickness (inch)	Corrosion Allowance (inch)	Crown Radius (inch)	Knuckle Radius (inch)	Elliptical Ratio	Conical Apex Angle	Hemispherical Radius (inch)	Flat Diameter (inch)	Side to Pressure (Convex or Concave)
(a)	Top Head	0.53	0.125	N/A	N/A	2:1	N/A	N/A	N/A	Concave
(b)	Bottom Head	0.53	0.125	N/A	N/A	2:1	N/A	N/A	N/A	Concave

If removable, bolts used (describe other fastenings) N/A (Material spec. number, grade, size, number)

9. MAWP 200 (Internal) 15 (External) psi at max temp. 302 (Internal) 302 (External) °F

Min. design metal temp. -50 °F at 200 psi. Hydro., ~~pneu., or comb.~~ test press. 260 psi.

Proof test N/A

10. Nozzles, inspection, and safety valve openings:

Purpose (Inlet,Outlet,Drain etc.)	No.	Diameter or Size (inch)	Type	Material		Nozzle Thickness (inch)		Reinforcement Material	Attachment Details		Location (Insp. Open.)
				Nozzle	Flange	Nom.	Corr.		Nozzle	Flange	
N1 INLET	1	16 ID	RFHB CL 150	SA-350LF2 CL1	-	1.81	0.125	N/A	UW-16.1{c}	-	Shell
N2 GAS OUTLET	1	16 ID	RFHB CL 150	SA-350LF2 CL1	-	1.81	0.125	N/A	UW-16.1{c}	-	Top Head
N3 LIQUID OUTLET	1	NPS 4	RFWN CL 150	SA-333GR6	SA-350LF2 CL1	0.53	0.125	N/A	UW-16.1{c}	TYPE 1	Shell
N4 DRAIN	1	NPS 2	RFWN CL 300	SA-333GR6	SA-350LF2 CL1	0.34	0.125	N/A	UW-16.1{c}	TYPE 1	Bottom Head
N5 PSV-1610E	1	6 ID	RFLWN CL 150	SA-350LF2 CL1	-	0.88	0.125	N/A	UW-16.1{c}	-	Shell
N6A/B LIT-1610	2	2 ID	RFLWN CL 300	SA-350LF2 CL1	-	0.66	0.125	N/A	UW-16.1{c}	-	Shell

11. Supports: Skirt YES (Yes or no) Lugs NO (Number) Legs NO (Number) Other N/A (Describe) Attached Welded to Bottom Head (Where and how)

12. Remarks: Manufacturer's Partial Data Reports properly identified and signed by Commissioned Inspectors have been furnished for the following items of the report: N/A (Name of part, item number, Manufacturer's name and identifying stamp)

341cu.ft. See attached U4 forms for additional nozzles. Owner's tag# (002-V-01-1610).
Heads and Shells I.T per UG-84(i)(a) @ -50F Rest Exempt per: UCS-66(g) FIG UCS-66(c).
RT FULL PER UW-11(a).
N11 NPS 2 RFBL SA350LF2CL1 CL 300, Studs 5/8"x3/1/2" LG c/w 2 nuts each. SA-193-B7 and SA-194-2H, UNRC 2A.
M1 NPS 20 RFBL SA350LF2CL1 CL 150, Studs 1/1/8"x6/1/4" LG c/w 2 nuts each. SA-193-B7 and SA-194-2H, 8UNR 2A.
Vessel Hydro-tested Vertically.
Construction drawing number: 5B1108-02-DR-20-001/002 Rev.7/1

CERTIFICATE OF SHOP/FIELD COMPLIANCE

We certify that the statements made in this report are correct and that all details of design, material, construction, and workmanship of this vessel conform to the ASME BOILER AND PRESSURE VESSEL CODE, Section VIII, Division 1. "U" Certificate of Authorization Number 40,338 Expires February 4 , 2014

Date 17-Oct-2013 Co. name 5Blue Process Equipment Inc. (Manufacturer) Signed Joelle Dery-Brochu (Representative)

CERTIFICATE OF SHOP/FIELD INSPECTION

Vessel constructed by 5Blue Process Equipment Inc. at 2303, 8th Street Nisku, Alberta

I, the undersigned, holding a valid commission issued by the National Board of Boiler and Pressure Vessel Inspectors and/or the State or Province of Alberta and employed by ABSA have inspected the component described in this Manufacturer's Data Report on 17-Oct-2013, and state that, to the best of my knowledge and belief, the Manufacturer has constructed this pressure vessel in accordance with ASME BOILER AND PRESSURE VESSEL Code, Section VIII, Division 1. By signing this certificate neither the Inspector nor his/her employer makes any warranty, expressed or implied, concerning the pressure vessel described in this Manufacturer's Data Report. Furthermore, neither the Inspector nor his/her employer shall be liable in any manner for any personal injury or property damage or a loss of any kind arising from or connected with this inspection.

Date 17-Oct-2013 Signed (Authorized Inspector) Commissions NB14446A, AB422 [National Board (incl endorsements), State, Province and number]

AB627060

FORM U-4 MANUFACTURER'S DATA REPORT SUPPLEMENTARY SHEET
As Required by the Provisions of the ASME Boiler and Pressure Vessel Code Rules, Section VIII, Division 1

1. Manufactured and certified by: 5Blue Process Equipment Inc. 2303-8th Street, Nisku, Alberta, Canada, T9E-7Z3
   (Name and address of Manufacturer)
2. Manufactured for: DEVON NEC CORPORATION. #400, 3 Ave Suite 2000 Calgary, Alberta T2P 4H2, Canada
   (Name and address of Purchaser)
3. Location of installation: Ferrier Central Processing Facility Central Oil Battery Separation and Treatment LSD: 11-02-039-08W5M
   (Name and address)
4. Type: Vertical (Horizontal, vertical, or sphere) | CARDIUM GAS SEPARATOR (Tank, separator, heat exch., etc.) | 5B1108-20 (Manufacturer's serial number)

W2983.2 (CRN) | 5B1108-02-DR-20-001 Rev. 7 (Drawing number) | N/A (Nat'l Bd No.) | 2013 (Year built)

Nozzles, inspection, and safety valve openings:

Purpose (Inlet, Outlet, Drain, etc)	No.	Diameter or Size	Flange Type	Material		Nozzle Thickness(in)		Reinforcement Material	How Attached		Location (Insp. Open.)
				Nozzle	Flange	Nom.	Corr.		Nozzle	Flange	
N7 A/B LIT-1610B	2	2"ID	RFLWN CL 300	SA350LF2 CL1	-	0.66	0.125	N/A	UW-16.1 (c)	-	Shell
N8 PG-1610D/PIT-1610C	1	2"D	RFLWN CL 300	SA350LF2 CL1	-	0.66	0.125	N/A	UW-16.1 (c)	-	Shell
N9 TIT/TE/TW-1610A	1	2"ID	RFLWN CL 300	SA350LF2 CL1	-	0.66	0.125	N/A	UW-16.1 (c)	-	Shell
N10 TG/TW-1610B	1	2"ID	RFLWN CL 300	SA350LF2 CL1	-	0.66	0.125	N/A	UW-16.1 (c)	-	Shell
N11 SPARE	1	2"ID	RFLWN CL 300	SA350LF2 CL1	-	0.66	0.125	N/A	UW-16.1 (c)	-	Shell
N12 A/B PSHH-1110A	2	4"ID	RFLWN CL 150	SA350LF2 CL1	-	0.75	0.125	N/A	UW-16.1 (c)	-	Shell
N13 PURGE	1	2"ID	RFLWN CL 300	SA350LF2 CL1	-	0.66	0.125	N/A	UW-16.1 (c)	-	Shell
M1 MANWAY	1	20"ID	RFHB CL 150	SA350LF2 CL1	-	1.60	0.125	N/A	UW-16.1 (c)	-	Shell

Data Report Item Number | Remarks

Certificate of Authorization: Type: "U" Cert. No. 40,338 Expires February 4, 2014

Date 17-Oct-2013 Name 5Blue Process Equipment Inc. (Manufacturer) Signed Joelle Dery-Brochu (Representative)

Date 17-Oct-2013 Name M. Parks (Authorized Inspector) Commission NB14446A, AB422 [National Board (incl. Endorsement), State, Province and number]

ABSA
the pressure equipment safety authority

PRESSURE PIPING CONSTRUCTION AND TEST DATA REPORT

In accordance with the provisions of the PESR Section 31(1)

Shop Construction ☒; **Field Construction** ☐;
Final Data Report ☒; **Partial Data Report** ☐ (from one ABSA- authorized Contractor to another ABSA- authorized Contractor).

Complete both sides of this Form

1. Constructed By: 5 Blue Process Equipment Inc Owner's Job No: 01-00348.01
(Name of ABSA authorized primary contractor or subcontractor)
2303 - 8th Street, Nisku, Alberta, CANADA, T9E 7Z3
(Address)
Certificate of Authorization Permit No. AQP-1507 Expiry Date: February 4th,2017

2. Constructed For:
(Name of primary contractor if different from above)
(Address)
Certificate of Authorization Permit No. AQP-N/A Expiry Date: N/A
(Required when the primary contractor undertakes some/all of the quality functions, e.g., NDE, PWHT, Tie-in, fabrication, hydro test, final assembly etc.)

3. Owner: DEVON NEC CORPORATION.#400.3 Ave suit 2000 Calgary, Alberta T2P 4H2, Canada
(Name and address)
LSD 11-02-038-08 W5M
(Location of installation)
Certificate of Authorization Permit No. AQP- N/A Expiry Date: N/A
(Required when the owner undertakes some/all of the quality functions, e.g., NDE, PWHT, Tie-in, fabrication, hydro test, final assembly etc.)

4. Piping Design Alberta Registration No.: PP-N/A
(Required if aggregate piping volume is over 0.5m^3)

5. Design Responsibility: Owner ☒; Contractor ☐

6. WP No.: WP-3146.2 ; Company: 5Blue Process Equipment Inc. Owner's WP No. (If used): WP-N/A
(Alberta Registration No.) (Alberta Registration No.)
WPS No(s). used: 5B-102 aw/pwht, 5B-103 aw/pwht ; Owner's WPS No(s). (If used): N/A

7. Code: ASME B31.1 Non Boiler External Piping ☐; ASME B31.1 Boiler External Piping ☐;
B31.5 ☐; B31.9 ☐; CSA Z662 Steam Pipelines ☐;
ASME B31.3 ☒ - Service Category: Normal ☒, D ☐, M ☐, High Pressure ☐; Severe Cyclic Condition ☐
High Purity ☐

Drawing No. Rev. No. Line No.	Fluid (Air/Stm. Etc.)	Des. Press. kPa	Des. Temp.°C (Max. & Min.)	Pressure Test kPa	Test Medium	Pipe Mat'l Spec. & Grade	C.A. mm	Pipe NPS & Schedule	Flange Material & Rating	PWHT/ Preheat Temp.°C	NDE

Partial Data Reports certified by sub-contractors are listed below and attached to this Data Report ☐

No.	Line No.	Spool No.	Dwg. No. (with Rev. No.)	Sub-contractor (Name)	AQP No. (if from Alberta)	Expiry (if from Alberta)

Remarks: For partial data report provide information about the code work that was not completed by the subcontractor (e.g., hydrostatic test, PWHT etc.). For final data report provide information about the code work that was not completed by subcontractors and subsequently completed by the primary contractor (e.g., hydrostatic test of entire assembly, PWHT etc.)

Please see attached LL # 5B1106-02-LL-80-001 rev 2 sheet 2 of 1

Endorse certificate 'A' or 'B'

A. CERTIFICATE OF COMPLIANCE
Signed by the subcontractor when supplying this certificate as a
Partial Data Report

We certify that the statements in this Data Report are correct and that materials, construction and workmanship of the piping fabrication conform to the registered quality system and the applicable Piping code(s).

Date: _____ _____
Contractor

_____ _____
Print Authorized Representative's Name Signature

This certificate is not valid unless it forms part of a Final Data Report signed by Primary Contractor

B. CERTIFICATE OF COMPLIANCE
Signed by the primary contractor when supplying this certificate as a
Final Data Report

We certify that the statements in this Data Report are correct and that piping job no. 5B1108 described in this Data Report was constructed in accordance with the Province of Alberta Safety Codes Act and Regulations, and applicable ASME Piping Code(s).

Date: 9 Feb-14 5 Blue Process Equipment Inc
Contractor

JOELLE DERY-BROCHU
QUALITY CONTROL
(780)955-2040 E:241
Print Authorized Representative's Name Signature

CERTIFICATE OF INSPECTION

I, the undersigned, employed by Devon NEC have verified that all required examination and testing has been completed, and inspected the piping described in this construction data report to the extent necessary to be satisfied that it conforms to all applicable examination requirements of the Code and of the engineering design, and state that, to the best of my knowledge and belief, the contractor has constructed this piping in accordance with the Alberta Safety Codes Act and Regulations. By signing this certificate neither the inspector nor his or her employer makes any warranty, expressed or implied, concerning the piping described in this construction data report. Furthermore, neither the inspector nor his or her employer shall be liable in any manner for any personal injury or property damage or a loss of any kind arising from or connected with this inspection.

Date: March 31, 2014 Date: _____

Don de Groot _____
Owner's Inspector Name (please print) ABSA Safety Codes Officer (please print) (BOILER EXTERNAL PIPING ONLY)

_____ _____
Owner's Inspector Signature: ABSA Safety Codes Officer's Signature

Current version of this Form may be obtained from www.absa.ca

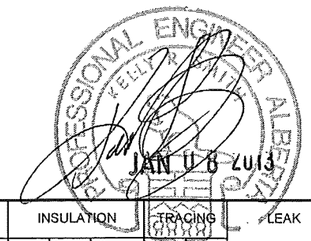

Line Designation Table - Calgary Division

Devon - Ferrier - LIQUID EXTRACTION PLANT

Devon job no. 01-00348.01

5B1108-Cardium Gas Separator Package

NPS	COMMODITY	PIPING MAT'L LINE CLASS	LINE NUMBER PROCESS CODE	LINE NUMBER SEQUENCE	PIPE SCHED OR THICK.	REFERENCE P&ID (1)	SERVICE INFORMATION FLUID	FROM	TO	PHASE (2)	OPERATING CONDITIONS NORMAL PRESS kPag	NORMAL TEMP °C	UPSET (3) PRESS kPag	UPSET (3) MAX.TEMP °C	DESIGN CONDITIONS CODE (4) PRESS kPag	CODE (4) TEMP °C	MDMT C	INSULATION TYPE (7)	INSULATION MAT'L (8)	INSULATION THICK. mm	TRACING TYPE (9)	TRACING MAINTAIN °C	LEAK TEST TYPE (11)	LEAK TEST PRESS kPag	PAINT	NDE (12)	PWHT	ABSA REQUIRED (Y/N)	SPECIAL NOTES (14)	REVISION
324	PG	150	A11	1338	STD	5B1108-02-DR-00-001	VAPOUR	SKID EDGE	VESSEL	GAS	700	43			1872	66 to -29	-29						HYDRO	2940	YES	10% X-RAY	NO	YES		
60	PG	150	A11	1338	STD	5B1108-02-DR-00-001	VAPOUR	SKID EDGE	VESSEL	GAS	700	43			1872	66 to -29	-29						HYDRO	2940	YES	10% X-RAY	NO	YES		
406	PG	150	A11	1338	80	5B1108-02-DR-00-001	VAPOUR	SKID EDGE	VESSEL	GAS	700	43			1872	66 to -29	-29						HYDRO	2940	YES	10% X-RAY	NO	YES		
60	FG	150	AL11	20329	80	5B1108-02-DR-00-001	PURGE GAS	SKID EDGE	DRAIN LINE	GAS	700	10			1872	66 to -45	-29						HYDRO	2940	YES	10% X-RAY	NO	YES		
60	UA	150	AU11	22305	80	5B1108-02-DR-00-001	UTILITY AIR	SKID EDGE	33 BA8202A	GAS	830	25			1034	60 to -29	-29						HYDRO	2940	YES	10% X-RAY	NO	YES		
168	PG	150	A11	1341	STD	5B1108-02-DR-00-001	VAPOUR	VESSEL	168 BA0106A1	GAS	700	43			1960	66 to -29	-29						HYDRO	2940	YES	10% X-RAY	NO	YES		
219	HF	150	A11	9339	STD	5B1108-02-DR-00-001	VAPOUR	PSV 1610E	SKID EDGE	GAS	700	43			1580	150 to -29	-29						HYDRO	2940	YES	10% X-RAY	NO	YES		
273	HF	150	A11	9339	STD	5B1108-02-DR-00-001	VAPOUR	PSV 1610E	SKID EDGE	GAS	700	43			1580	150 to -29	-29						HYDRO	2940	YES	10% X-RAY	NO	YES		
114	HF	150	A11	9339	STD	5B1108-02-DR-00-001	VAPOUR	PSV 1610E	SKID EDGE	GAS	700	43			1580	150 to -29	-29						HYDRO	2940	YES	10% X-RAY	NO	YES		
60	PG	150/300?	A11	1340	80	5B1108-02-DR-00-001	VAPOUR	PRODUCED GAS	HP FLARE	GAS	700	43			1960	66 to -29	-29						HYDRO	2940	YES	10% X-RAY	NO	YES		
406	PG	150	A11	1339	STD	5B1108-02-DR-00-001	VAPOUR	VESSEL	METER RUN	GAS	700	43			1960	66 to -29	-29						HYDRO	2940	YES	10% X-RAY	NO	YES		
356	PG	150	A11	1339	STD	5B1108-02-DR-00-001	VAPOUR	VESSEL	REDUCER	GAS	700	43			1960	66 to -29	-29						HYDRO	2940	YES	10% X-RAY	NO	YES		
324	PG	150	A11	1339	STD	5B1108-02-DR-00-001	VAPOUR	REDUCER	SKID EDGE	GAS	700	43			1960	66 to -29	-29						HYDRO	2940	YES	10% X-RAY	NO	YES		
60	IA	150	AU11	22307	80	5B1108-02-DR-00-001	INSTRUMENT AIR	SKID EDGE	REDUCER	GAS	830	25			1034	60 to -29	-29						HYDRO	2940	YES	10% X-RAY	NO	YES		
48	UHMR	300	A11a	21382	80	5B1108-02-DR-00-001	UTILITY HEAT MEDIUM RETURN	UHG/UHM	REDUCER	LIQUID	380	65			1693	120 to -29	-29						HYDRO	2940	YES	10% X-RAY	NO	YES		
60	UHMR	300	A11a	21382	80	5B1108-02-DR-00-001	UTILITY HEAT MEDIUM RETURN	REDUCER	SKID EDGE	LIQUID	380	65			1693	120 to -29	-29						HYDRO	2940	YES	10% X-RAY	NO	YES		
60	UHMS	300	A11a	21368	80	5B1108-02-DR-00-001	UTILITY HEAT MEDIUM SUPPLY	SKID EDGE	REDUCER	LIQUID	550	90			1693	120 to -29	-29						HYDRO	2940	YES	10% X-RAY	NO	YES		
48	UHMS	300	A11a	21368	80	5B1108-02-DR-00-001	UTILITY HEAT MEDIUM SUPPLY	REDUCER	UHG/UHM	LIQUID	550	90			1693	120 to -29	-29						HYDRO	2940	YES	10% X-RAY	NO	YES		
60	PL	150	A11	1310	80	5B1108-02-DR-00-001	CONDENSATE	REDUCER	SKDI EDGE	LIQUID	700	43			1960	66 to -29	-29						HYDRO	2940	YES	10% X-RAY	NO	YES		
114	PL	150	A11	1310	80	5B1108-02-DR-00-001	CONDENSATE	VESSEL	REDUCER	LIQUID	700	43			1960	66 to -29	-29						HYDRO	2940	YES	10% X-RAY	NO	YES		
60	HCD	150	A11	23460	80	5B1108-02-DR-00-001	CONDENSATE	CLOSED DRAIN	CLOSED DRAIN HEADER	LIQUID	700	43			1960	66 to -29	-29						HYDRO	2940	YES	10% X-RAY	NO	YES		

Process Engineer _____ Piping Engineer _____

149-070-PDT-811 (017254) EPF-0177
Rev 4 (03-May-10)

See Cover Sheet
for Stamps

Corporate Amended

Document No.:
Rev.:

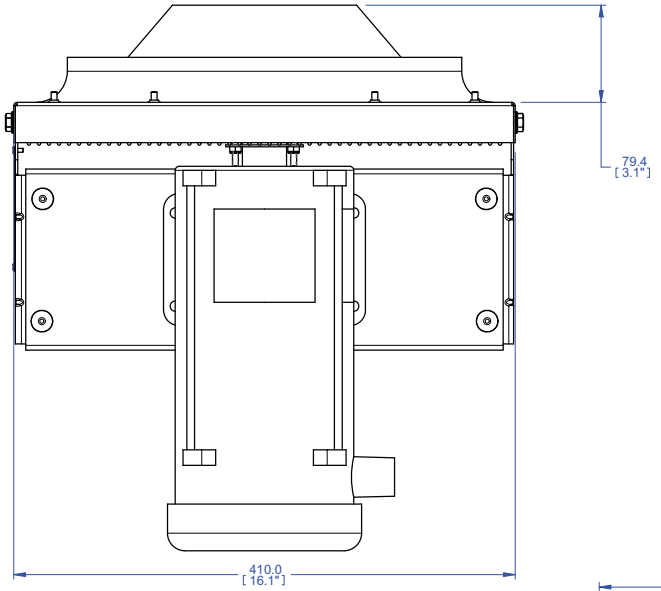

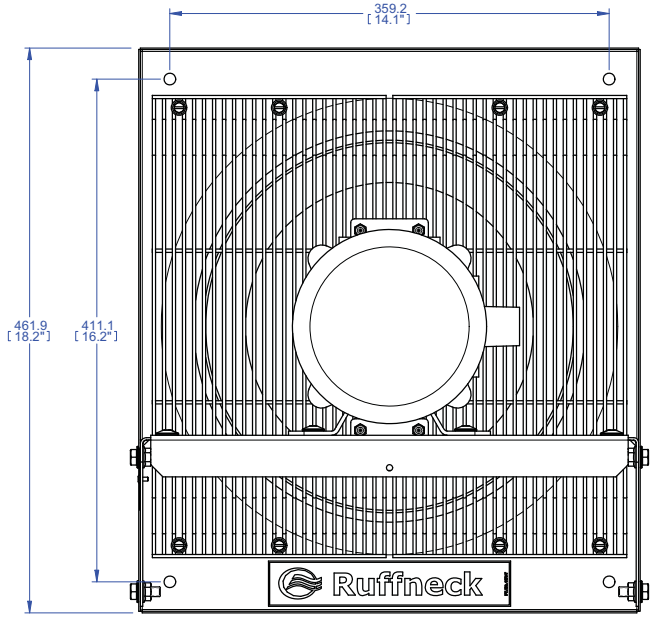

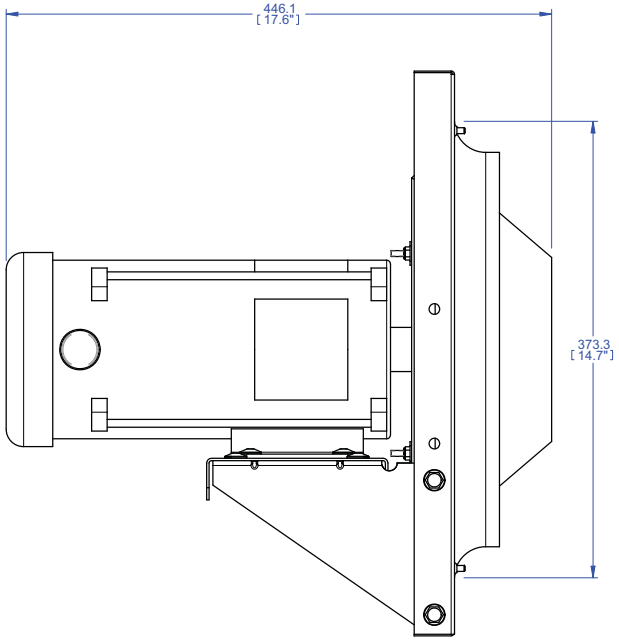

NOTES:

1) ALL DIMENSIONS IN MILLIMETERS.

2) HAZARDOUS LOCATION CLASSIFICATIONS:
CLASS I, DIV 1&2, GROUPS C&D
CLASS II, DIV 1&2, GROUPS E,F&G
TEMPERATURE CODE: T3B 165°C (329°F)

3) MOTORS ARE CSA APPROVED AND/OR UL LISTED.

4) FAN: ALUMINUM BLADE, STEEL SPIDER AND HUB WITH 5/8" (15.875mm) BORE. OPTIONAL HERESITE COATING FOR CORROSIVE ATMOSPHERES.

5) FAN GUARD: SPLIT DESIGN WITH CLOSE WIRE SPACING, MEETS OHSA REQUIREMENTS.

6) MOTORS: PERMANENTLY LUBRICATED BALL BEARING TYPE WITH RIDGID BASE. EXPLOSION-PROOF OR TOTALLY ENCLOSED CONSTRUCTION. ALL STANDARD VOLTAGES FOR 60 AND 50 HERTZ ARE AVAILABLE.

7) FRAME MATERIAL: 16ga (0.060" OR 1.52mm) EPOXY-COATED STEEL. OPTIONAL STAINLESS STEEL OR HERESITE COATING FOR CORROSIVE ATMOSPHERES.

8) MOUNTING: FOUR 3/8" (9.5mm)∅ HOLES MUST BE MOUNTED TO A RIDGID STRUCTURE.

BASE MODEL	FAN SIZE	CABINET MATERIAL	MOTOR		SPECIAL BUILD
EFX	- 12	A	- 1	A	- XX

MOTOR ELECTRICAL SPECS

	VOLTS	PHASE	HERTZ
A	115	1	60
B	208	1	60
C	208	3	60
D	230	1	60
E	230	3	60
F	460	1	60
G	460	3	60
H	575	3	60
I	220	1	50
J	380	3	50
K	440	3	50

MOTOR ENCLOSURE

1	TOTALLY ENCLOSED
2	X-PROOF, GR C, D, E, F & G
3	WASHDOWN
4	WASHDOWN STAINLESS STEEL
5	SPECIAL MOTOR

CABINET MATERIAL

A	EPOXY POWDER COATED CARBON STEEL
B	HERESITE PHENOLIC COATED CARBON STEEL
C	STAINLESS STEEL

FAN SIZE

12	12" DIA

EXHAUST FAN MODEL

EFX	EXHAUST FAN

1 - EFX-12A-2H Exhaust Fan
c/w back guard & back draft damper

5B1108-02-DS-85-001 Rev 0

REV.	REVISION DESCRIPTION	DATE	BY

TITLE: EFX12, EXHAUST FAN

DWG NO.: 10187 SHEET:
SYTELINE NO.: 10187
SCALE: SCALE
DRN BY: MCARGILL 10 May 2007
CHK'D BY:
APP'D. BY:

TOLERANCE UNLESS NOTED OTHERWISE

± 1/2° ANGULAR	± 0.005" DECIMAL	± 1/16" FRACTIONAL	± 1 mm METRIC

CCI Thermal Technologies INC
EDMONTON, ALBERTA

1 - Back Draft Damper for EFX-12 Exhaust Fan

MODEL SIZE	A		B		C		D		E	CCI PART NUMBER
	mm	Inches	mm	Inches	mm	Inches	mm	Inches	mm/Inches	
12	514.4	20 1/4	489.0	19 1/4	463.6	18 1/4	409.6	16 1/8		10205
16	666.8	26 1/4	590.6	23 1/4	573.6	22 9/16	511.2	20 1/8		10206
20	765.2	30 1/8	692.2	27 1/4	689.0	27 1/8	616.0	24 1/4	50.8 (2)	10207
24	866.8	34 1/8	793.8	31 1/4	787.4	31	717.6	28 1/4		10208
30	1019.2	40 1/8	939.8	37	943.0	37 1/8	863.6	34		10209

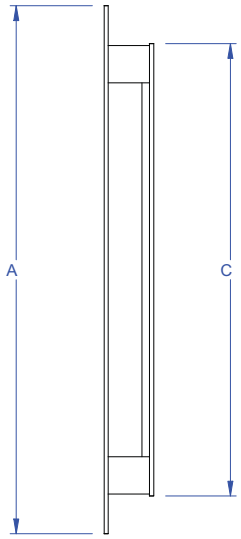

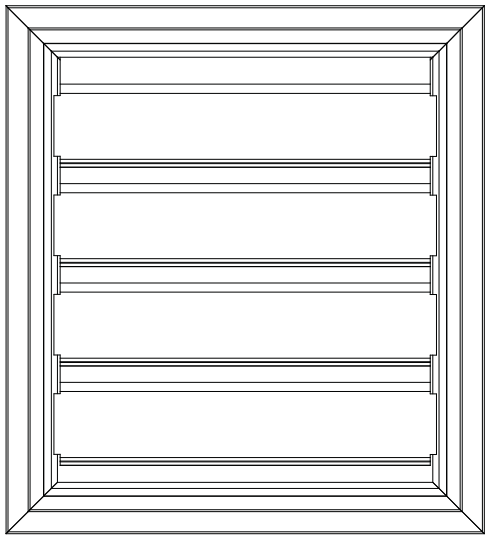

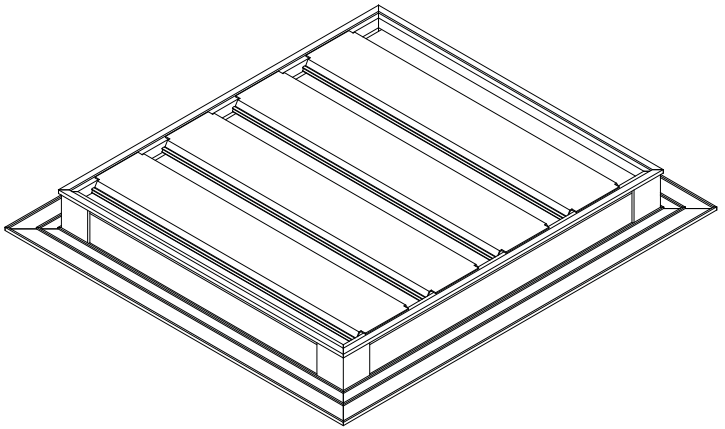

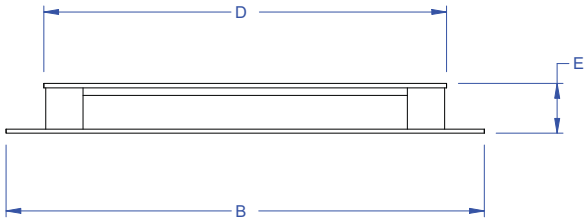

NOTES:

1) MATERIAL: ALUMINUM EXTRUSIONS.

REV.	REVISION DESCRIPTION	DATE	BY
TITLE: EFX BACKDRAFT DAMPER			
DWG NO.: 10205 SHEET: 1 OF 1	TOLERANCE UNLESS NOTED OTHERWISE		
SYTELINE NO.: 10205	± 1/2° ANGULAR	± 0.005" DECIMAL	± 1/16" FRACTIONAL	± 1 mm METRIC
SCALE: SCALE			
DRN BY: MCARGILL 11 Sep 2007	CCI Thermal Technologies INC. EDMONTON, ALBERTA		
CHK'D BY:			
APP'D. BY:			

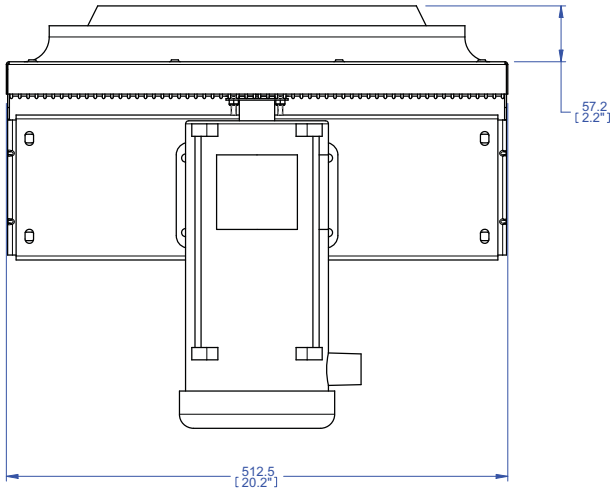

NOTES:

1) ALL DIMENSIONS IN MILLIMETERS.

2) HAZARDOUS LOCATION CLASSIFICATIONS:
CLASS I, DIV 1&2, GROUPS C&D
CLASS II, DIV 1&2, GROUPS E,F&G
TEMPERATURE CODE: T3B 165°C (329°F)

3) MOTORS ARE CSA APPROVED AND/OR UL LISTED.

4) FAN: ALUMINUM BLADE, STEEL SPIDER AND HUB WITH 5/8" (15.875mm) BORE. OPTIONAL HERESITE COATING FOR CORROSIVE ATMOSPHERES.

5) FAN GUARD: SPLIT DESIGN WITH CLOSE WIRE SPACING, MEETS OHSA REQUIREMENTS.

6) MOTORS: PERMANENTLY LUBRICATED BALL BEARING TYPE WITH RIDGID BASE. EXPLOSION-PROOF OR TOTALLY ENCLOSED CONSTRUCTION. ALL STANDARD VOLTAGES FOR 60 AND 50 HERTZ ARE AVAILABLE.

7) FRAME MATERIAL: 16ga (0.060" OR 1.52mm) EPOXY-COATED STEEL. OPTIONAL STAINLESS STEEL OR HERESITE COATING FOR CORROSIVE ATMOSPHERES.

8) MOUNTING: FOUR 3/8" (9.5mm)∅ HOLES MUST BE MOUNTED TO A RIDGID STRUCTURE.

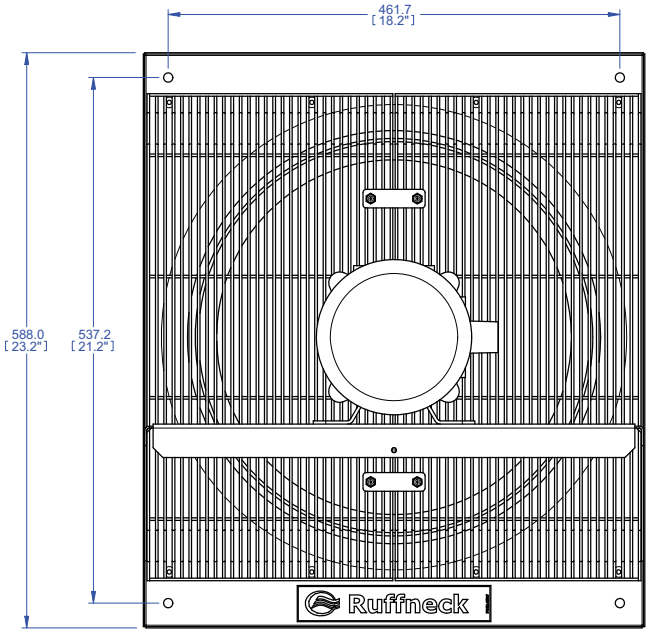

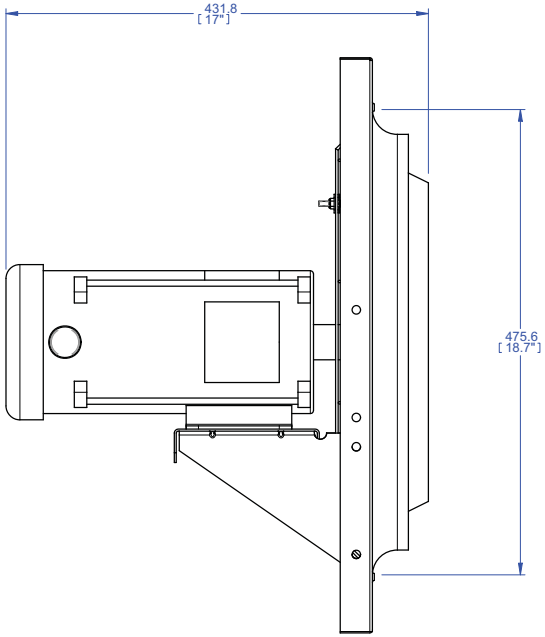

BASE MODEL	FAN SIZE	CABINET MATERIAL	MOTOR		SPECIAL BUILD
EFX	16	A	1	A	XX

MOTOR ELECTRICAL SPECS

	VOLTS	PHASE	HERTZ
A	115	1	60
B	208	1	60
C	208	3	60
D	230	1	60
E	230	3	60
F	460	1	60
G	460	3	60
H	575	3	60
I	220	1	50
J	380	3	50
K	440	3	50

MOTOR ENCLOSURE

1	TOTALLY ENCLOSED
2	X-PROOF, GR C, D, E, F & G
3	WASHDOWN
4	WASHDOWN STAINLESS STEEL
5	SPECIAL MOTOR

CABINET MATERIAL

A	EPOXY POWDER COATED CARBON STEEL
B	HERESITE PHENOLIC COATED CARBON STEEL
C	STAINLESS STEEL

FAN SIZE

16	16" DIA

EXHAUST FAN MODEL

EFX	EXHAUST FAN

1 - EFX-16A-2H Exhaust Fan
c/w back guard & back draft damper

5B1108-02-DS-85-002 Rev 0

REV.	REVISION DESCRIPTION	DATE	BY
TITLE: EFX16, EXHAUST FAN			
DWG NO.: 10188 SHEET:	TOLERANCE UNLESS NOTED OTHERWISE: ± 1/2° ANGULAR; ± 0.005" DECIMAL; ± 1/16" FRACTIONAL; ± 1 mm METRIC		
SYTELINE NO.: 10188			
SCALE: SCALE			
DRN BY: MCARGILL 10 May 2007			
CHK'D BY:			
APP'D. BY:			

CCI Thermal Technologies INC
EDMONTON, ALBERTA

1 - Back Draft Damper for EFX-16 Exhaust Fan

MODEL SIZE	A		B		C		D		E	CCI PART NUMBER
	mm	Inches	mm	Inches	mm	Inches	mm	Inches	mm/Inches	
12	514.4	20 1/4	489.0	19 1/4	463.6	18 1/4	409.6	16 1/8		10205
16	666.8	26 1/4	590.6	23 1/4	573.6	22 9/16	511.2	20 1/8		10206
20	765.2	30 1/8	692.2	27 1/4	689.0	27 1/8	616.0	24 1/4	50.8 (2)	10207
24	866.8	34 1/8	793.8	31 1/4	787.4	31	717.6	28 1/4		10208
30	1019.2	40 1/8	939.8	37	943.0	37 1/8	863.6	34		10209

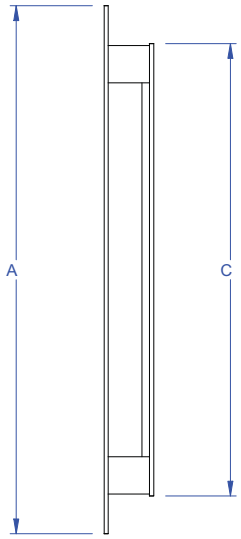

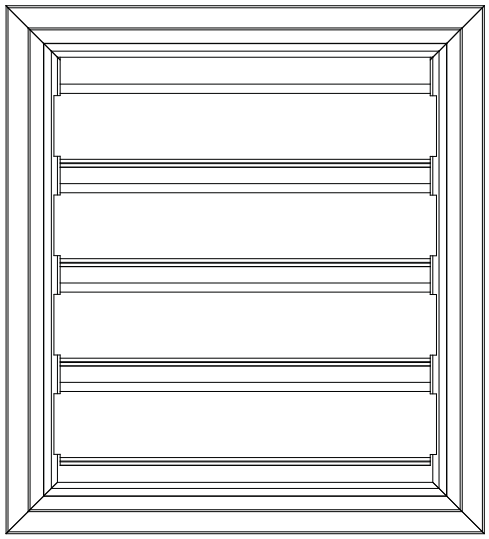

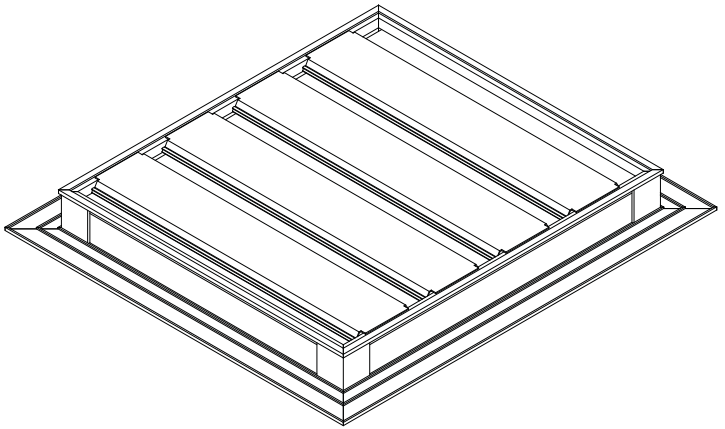

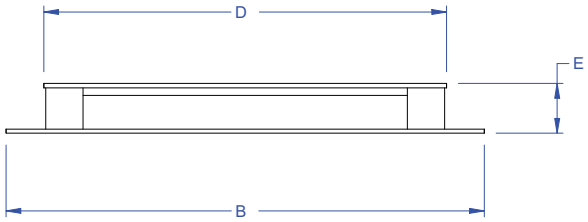

NOTES:

1) MATERIAL: ALUMINUM EXTRUSIONS.

REV.	REVISION DESCRIPTION	DATE	BY
TITLE: EFX BACKDRAFT DAMPER			
DWG NO.: 10205	SHEET: 1 OF 1	TOLERANCE UNLESS NOTED OTHERWISE	
SYTELINE NO.: 10205		± 1/2° ANGULAR	± 0.005" DECIMAL
SCALE: SCALE		± 1/16" FRACTIONAL	± 1 mm METRIC
DRN BY: MCARGILL	11 Sep 2007	CCI Thermal Technologies INC. EDMONTON, ALBERTA	
CHK'D BY:			
APP'D. BY:			

Ruffneck™
Heaters for the Harshest Environments

CCI Thermal Technologies INC.
A Leader in Advanced Heating Solutions

Advanced Horizontal Unit Heaters

Model# AH-20A-A5A1-A1-2H

Customer: ALMAC METAL INDUSTRIES

Job Ref.: 5 BLUE 13691

Date: MAY 28 2013

Comments: 1 - AH-20A-A5A1-A1-2H
60 Weight Tri Ethylene Glycol Heater
c/w XT312 Thermostat and Basic Mounting Kit

General Specifications

Approvals	CRN 0H1903.2 - Steam and HVAC liquids only.
Fan	3 blade aluminum, steel spider and hub with 5/8" bore.
Fan Guard	2 piece design with close wire spacing. 3/8" diameter probe will not enter. Epoxy coated to match cabinet colour.
Mounting Holes	9/16" diameter holes, two at top and two at the bottom of heater.
Louver Blades	Anodized extruded aluminum.
Header material	3/16" (4.8mm) carbon steel.
Max Operating Press.	450 psi.
Max Operating Temp.	650°F

	AH-20A-A1, A3 or A5	AH-20A-B1, B3 or B5	AH-20A-C1
Air Delivery*	2930 CFM	2700 CFM	3000 CFM
Motor Requirements	½ hp	½ hp	½ hp
Tube Passes	1, 3 or 5	1, 3 or 5	1
Net Weight	155 lbs.	170 lbs.	195 lbs.
Shipping Weight	205 lbs.	209 lbs.	242 lbs.
Air throw at 15 psi steam	40 ft. (12.2m)	40 ft. (12.2m)	40 ft. (12.2m)

*At 70°F and sea level

Model Specifications

(1) Finned Tubes

☒ (A) 5/8" outside diameter (16-gauge, 0.065" wall thickness) carbon steel tubes. Tension wound aluminum fins @ 10 per inch.
☐ (B) 1" outside diameter (14-gauge, 0.083" wall thickness) carbon steel tubes. Extruded aluminum fins @ 9 per inch.
☐ (C) 1" outside diameter (10-gauge, 0.135" wall thickness carbon steel tubes. Extruded aluminum fins @ 5 per inch, only available for single-pass (steam) models.

(2) Tubeside Passes

☐ (1) 1-Pass
☐ (3) 3-Pass
☒ (5) 5- Pass

(3) Fluid Connections

☒ (A) 1 ½" NPT male Sch. 40
☐ (B) 1 ½" 300# RF Flanges

(4) Exchanger Coatings

☒ (1) Heat Resistant aluminum paint
☐ (2) Heresite® phenolic coating

(5) Cabinet Material

14-gauge (0.075") steel

☒ (A) Epoxy Coated with 5 stage pretreatment, including iron phosphate.
☐ (B) Heresite® phenolic coating

(6) Motor

CSA certified and/or UL Listed, 1725 rpm, permanently lubricated ball bearing type with rigid base. All 50 and 60 hertz standard voltages available.

☐ (1) General Purpose
☒ (2) Explosion-Proof

(7) Motor Electrical Specs

☐	(A)	115 volts	1 phase	60 hertz
☐	(B)*	208 volts	1 phase	60 hertz
☐	(C)*	208 volts	3 phase	60 hertz
☐	(D)	230 volts	1 phase	60 hertz
☐	(E)	230 volts	3 phase	60 hertz
☐	(F)**	460 volts	1 phase	60 hertz
☐	(G)	460 volts	3 phase	60 hertz
☒	(H)	575 volts	3 phase	60 hertz
☐	(I)**	220 volts	1 phase	50 hertz
☐	(J)**	380 volts	3 phase	50 hertz
☐	(K)**	440 volts	3 phase	50 hertz

*Motor may be marked 230 volts,

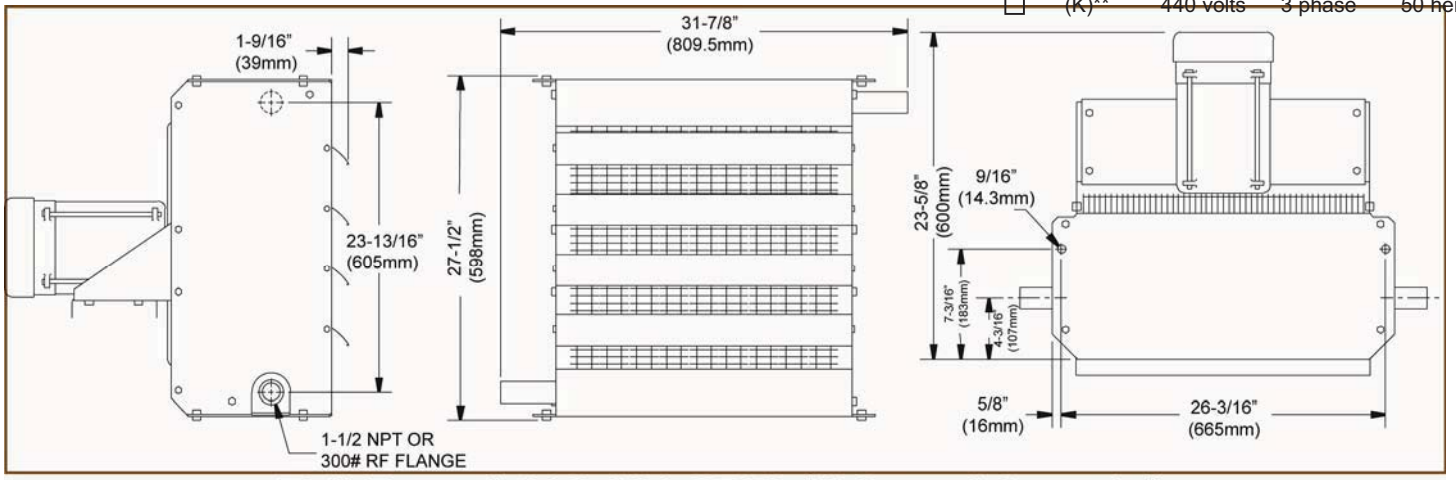

Toll Free: 1-800-661-8529 (U.S. and Canada)

CCI Thermal Technologies Inc. Ruffneck™ Heater Sizing Calculation Tool Performance Analysis Report

Reference Data						
Job Description:						
Internet Browser used:	Netscape			**Date: 2014 / 11 / 20**		
Heater Data				**Fluid Properties @ Average Temperature**		
Advanced Series Model No.	AH-20A-A5			Average Temperature	83.5	°C
Number of Passes	5 Passes			Reynolds Number	12,957	
Tube OD	15.88	mm				
Tube ID	12.57	mm		**Tubeside Conditions**		
Fin Spacing	10	fins / 2.54 cm		Fluid Flow Rate	2,966.38	kg/hr
Number of Rows	3 Rows			Tubeside Flow Rate	2.77	m³/hr@16°C
Input Data				Tubeside Pressure Drop	7.45	kPa
Fluid Name	50 % Ethylene Glycol by Weight					
Operating Pressure	550	kPa(g)		**Airside Conditions**		
Inlet Fluid Temperature	90	°C		Air Flow Rate	1.38	ACMS
Outlet Fluid Temperature	77	ºC		Air Flow Rate (Standard Conditions)	1.32	SCMS
Air Inlet Temperature	10	°C		Air Velocity	4.21	m/sec
Altitude	670	m ASL		Final Air Temperature	34.01	°C
Electric Motor Power	60	Hz		**Heater Performance Data**		
Any "Cautions" to note?				Heat Dissipated (Total)	38.81	kW
None						

Version: 1.01B4

Copyright © 2004 by CCI Thermal
All rights reserved.



Defender®
Explosion-Proof Thermostats

Defender® Explosion-Proof Thermostats

Ruffneck™ Defender® explosion-proof, heavy-duty thermostats are the smallest, lightest, and most durable thermostats available. They are designed to control heating only, cooling only, or ventilation systems in demanding industrial applications. These include oil refineries, petrochemical plants, pulp and paper mills, coal mines, grain elevators, hazardous waste storage facilities, and other hazardous locations where specific explosive gases or dusts are present.

For hazardous-location temperature controls, rely on Defender® Thermostats for the most dependable, trouble-free service available. The Defender® Thermostat's unique and highly engineered design offers outstanding features and benefits.

More Features...More Benefits:

- all-aluminum exterior
- no breakable external plastic parts
- no exposed copper or brass
- corrosion resistant, suitable for H2S environments
- compact & lightweight
- more competitively priced
- CFC & mercury free
- environmentally safe, no leveling required
- 3-year warranty longest trouble-free warranty in the industry
- precision die-cast components
- greater consistency, better quality
- bimetal sensing element
- fast-acting, reliable, unaffected by altitude
- no delicate coils or bellows
- rugged reliability
- 480 VAC max.
- wider range of applications

Specifications

Temperature range: 36°F to 82°F (2°C to 28°C)
Temperature differential: 2.5°F (1.5°C)
Net weight: 2.1 lbs. (0.95 kg)
Switching: Snap acting
Conduit opening: 3/4" - 14 NPT
Enclosure: NEMA Type 7 & 9

Electrical Rating

22 Amps Res., 480 VAC Max.;
1/2 HP @ 125 VAC, 1 HP @ 250 VAC
Class I, Divisions 1 & 2, Groups C & D;
Class II, Division 1, Groups E, F, & G;
Class II, Division 2, Groups F & G; Class III;
Class I, Zones 1 & 2, Groups IIA & IIB

Approvals

UL Listed & C.S.A. Certified

Patents

Pat. 08/583,929 USA
Pat. Pending 2,151,641 CAN
Des. Pat. 376,109 USA; Rd. 1996, 78975 CDN

Available in two models...

XT-311 (Feed-Thru, Single Pole, Single Throw)

For heating-only applications.

XT-312 (Feed-Thru, Single Pole, Double Throw)

For heating or cooling/ventilation applications.

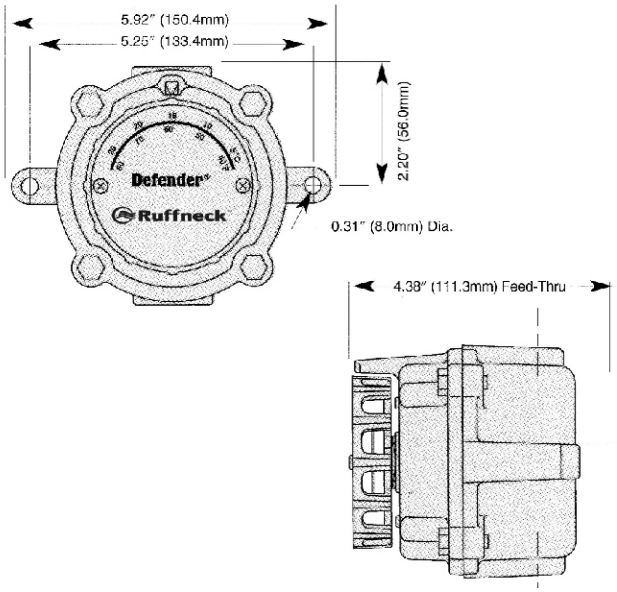

	ITEM	QTY	CCI PART NO	DESCRIPTION
	1	1	9706	ARM, MOUNTING
***	2	1	5455	Bracket, Mounting Attachment, AH12A
	3	3	4373	Lockwasher-1/2-Split-SZP
	4	3	2940	BOLT 1/2-13UNC x 1 1/4LONG, HEXAGON HEAD
	5	2	4372	NUT-1/2-13 UNC-H-SZP
	6	3	2941	WASHER, FLAT 1/2"

***MOUNTING BRACKETS
5455 - AH12A
5454 - AH16A
5453 - AH20A
5452 - AH24A

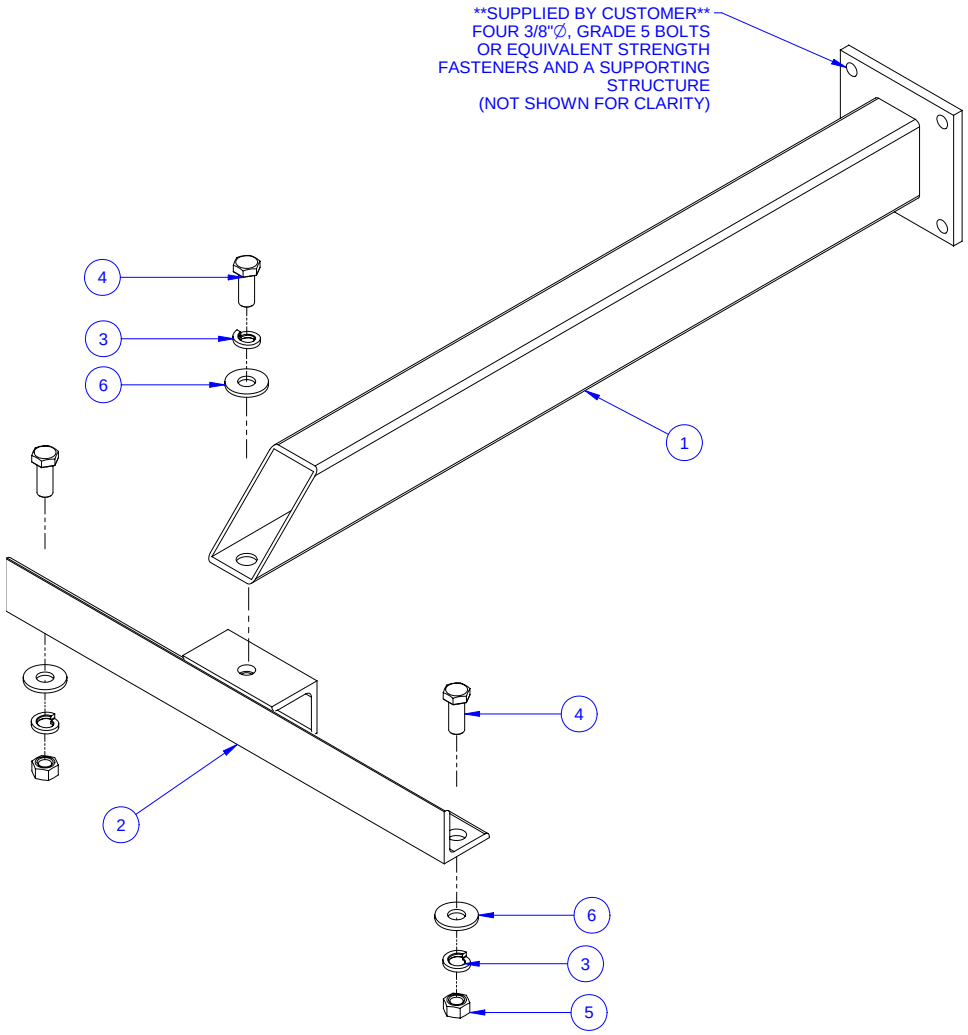

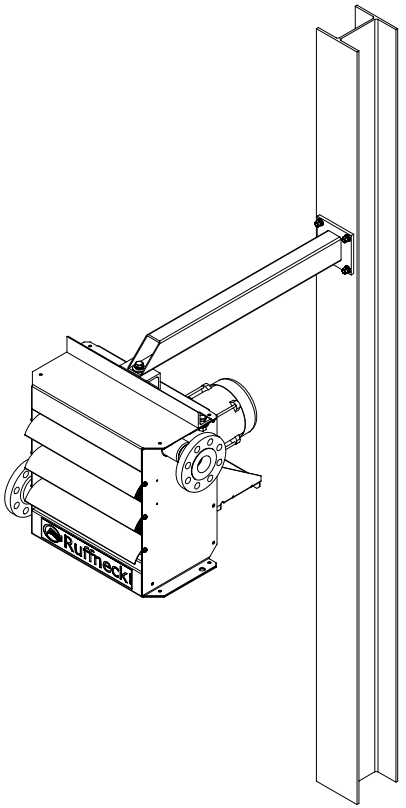

REV.	REVISION DESCRIPTION	DATE	BY
TITLE: MTG Kit, Ruffneck BMK AH			

		TOLERANCE UNLESS NOTED OTHERWISE			
DWG NO.: 5713	SHEET: 1 OF 1	± 1/2° ANGULAR	± 0.005" DECIMAL	± 1/16" FRACTIONAL	± 1 mm METRIC
SYTELINE NO.: 5713					
SCALE: NTS					
DRN BY: MCARGILL	20 Dec 2007				
CHK'D BY:					
APP'D. BY:					

CCI Thermal Technologies INC.
EDMONTON, ALBERTA

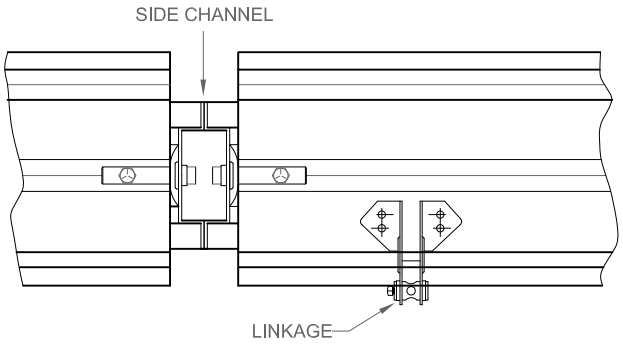

MULTIPLE SECTION DETAIL

ALUMINUM PARALLEL BLADE DAMPER PBX-4H6

STANDARD SPECIFICATIONS

CONST.	-	EXTRUDED ALUMINUM WELDED FRAME, MITERED CORNERS GUSSETS, MULLIONS AND SPREADER BARS ON ALL SECTIONS 48" (1219.2MM) AND LARGER
FRAME	-	4.5" X .75" X .125" (114.3MM X 19.1MM X 3.2MM) EXTRUDED ALUMINUM HAT CHANNEL
BLADES	-	6" X .064" (152.4MM X 1.6MM) EXTRUDED ALUMINUM, 5.8" (147.3MM) BLADE SPACING
SEALS	-	DUAL DUROMETER VINYL BLADE SEAL, -40 DEG. F. TO +200 DEG. F., S.S. SIDE SEALS
SHAFTS	-	.5" (12.7MM) DIA. C.R. PLATED STEEL
BEARINGS	-	.5" (12.7MM) OILITE BRONZE BUSHINGS
LINKAGE	-	IN AIRSTREAM, ROD TRAVEL 5.25" (133.4MM)
DRIVE	-	.5" (12.7MM) DIA. C.R. PLATED STEEL EXTENDING
SHAFT	-	6" (154.4MM) OUT OF FRAME
FINISH	-	MILL ALUMINUM
SIZE	-	MINIMUM 8" W X 8" H (203.2MM X 203.2MM) MAXIMUM 48" W X 72" H (1219.2MM X 1828.8MM)

OPTIONS

BEARINGS	-	.5" (12.7MM) NYLON BUSHINGS .5" (12.7MM) BALL BEARING
CONTROL	-	MANUAL, JACK SHAFT, MOTORIZED

TECHNICAL NOTES

CAUTION	-	ADVISE ON TYPE OF APPLICATION
MAX. RECOMMENDED VEL.	-	2000 FPM
MAX. SYSTEM PRESSURE	-	SEE CHART
MAXIMUM TEMP.	-	200° F.
LEAKAGE	-	LESS THAN .5% AT 4" W.G.
SHIPPING WEIGHT	-	APPROX. 5 LB/SQ. FT.
LARGER SIZES	-	MULTIPLE SECTIONS WILL BE PROVIDED FOR RE-ASSEMBLY BY OTHERS

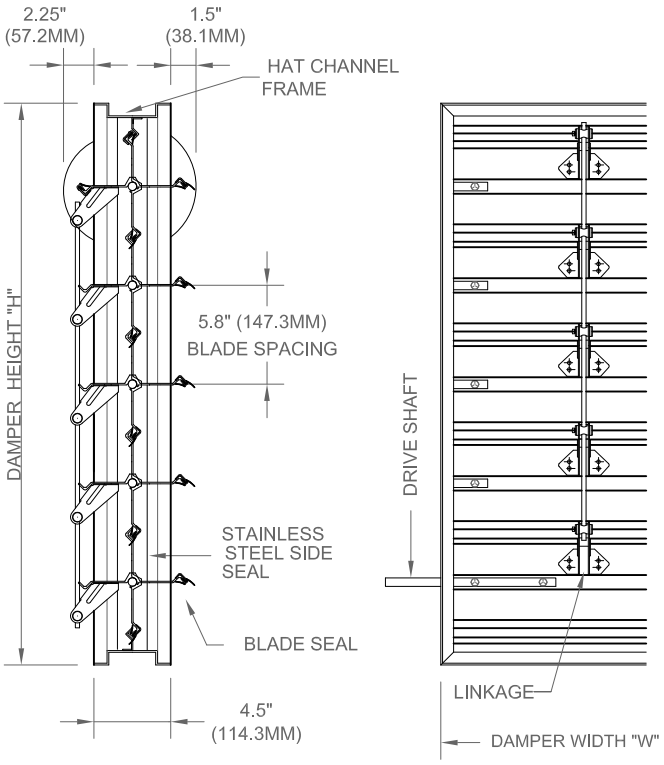

SECTION ELEVATION

DAMPER IS MANUFACTURED .25" (6.4MM) SMALLER THAN ORDERED SIZE UNLESS EXACT DIMENSIONS ARE STATED

NOTES

APPROVAL

DATE:
PROJECT:
ENGINEER:
CUSTOMER:
DISTRIBUTOR:

PBX-4H6.DWG

ALUMINUM
PARALLEL BLADE DAMPER
PBX-4H6

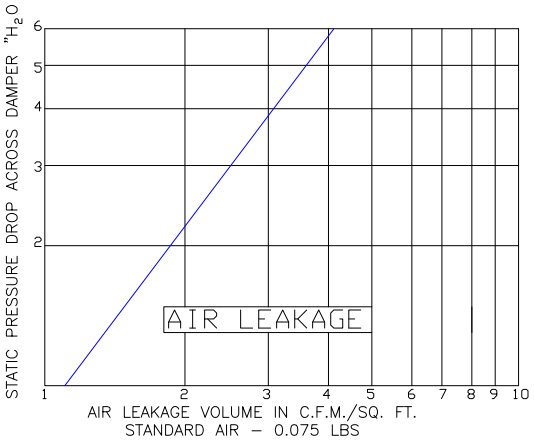

TORQUE REQUIREMENT CHART: INCH - LBS./SQ. FT.		
1000 F.P.M. @ 2" W.G.	1000 - 2000 F.P.M. @ 3" W.G. (X 1.5)	1000 - 2000 F.P.M. @ 4" W.G. (X 2.0)
7 IN. LBS./SQ. FT.	10.5 IN. LBS./SQ. FT	14 IN. LBS./SQ. FT

MAXIMUM SYSTEM PRESSURE			
12" WIDE	24" WIDE	36" WIDE	48" WIDE
4" SP W.G.	4" SP W.G.	3" SP W.G.	2.5" SP W.G.

AIR PERFORMANCE

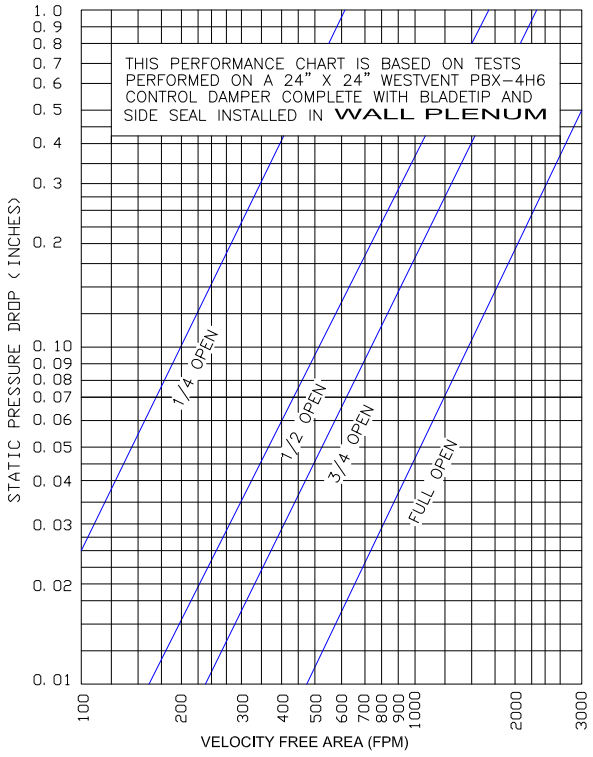

AIR PERFORMANCE

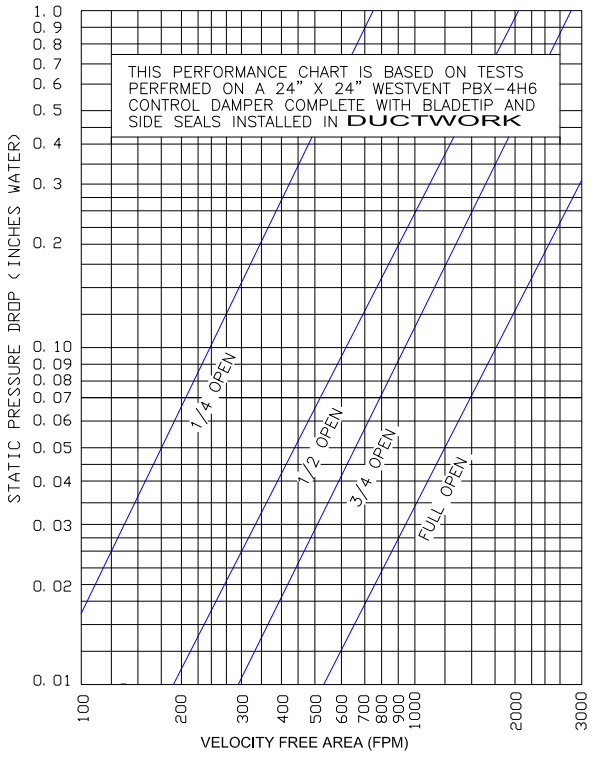

THE INFORMATION CONTAINED ON THIS DATA SHEET REMAINS THE PROPERTY OF WESTERN VENTILATION PRODUCTS LTD. AND IS PROTECTED BY COPYRIGHT. WESTVENT AIR PERFORMANCE RATINGS SHOWN ARE BASED ON TESTS MADE BY TECHNICIANS IN OUR TEST LABORATORY.

"WESTVENT" RESERVES THE RIGHT TO MAKE CHANGES TO IMPROVE OUR PRODUCTS WITHOUT NOTICE. NOVEMBER 15, 2005

NFBUP, NFBUP-S, NFXUP, NFXUP-S

On/Off, Spring Return, 24 to 240 VAC



Torque min. 90 in-lb, for control of air dampers

Application

For On/Off, fail-safe control of dampers in HVAC systems. Actuator sizing should be done in accordance with the damper manufacturer's specifications. Control is On/Off from an auxiliary contact, or a manual switch.

The actuator is mounted directly to a damper shaft up to 1.05" in diameter by means of its universal clamp. A crank arm and several mounting brackets are available for applications where the actuator cannot be direct coupled to the damper shaft.

Operation

The NFB and NFX series actuators provide true spring return operation for reliable fail-safe application and positive close off on air tight dampers. The spring return system provides constant torque to the damper with, and without, power applied to the actuator.

The NFB and NFX series provides 95° of rotation and is provided with a graduated position indicator showing 0° to 95°.

The actuator may be stalled anywhere in its normal rotation without the need of mechanical end switches.

The NFBUP-S and NFXUP-S versions are provided with two built-in auxiliary switches. These SPDT switches provide safety interfacing or signaling, for example, for fan start-up. The switching function at the fail-safe position is fixed at +10°, the other switch function is adjustable between +10° to +90°. The NFBUP, NFBUP-S, NFXUP and NFXUP-S actuator is shipped at +5° (5° from full fail-safe) to provide automatic compression against damper gaskets for tight shut-off.

Technical Data		NFBUP, NFBUP-S, NFXUP, NFXUP-S
Power supply		24...240 VAC -20% / +10%, 50/60 Hz 24...125 VDC ±10%
Power consumption	running	6 W
	holding	2.5 W
Transformer sizing		6 VA @ 24 VAC (class 2 power source) 6.5 VA @ 120 VAC 9.5 VA @ 240 VAC
Electrical connection		
NFBUP...		3 ft, 18 GA appliance cable, 1/2" conduit connector **-S models:** Two 3 ft, 18 gauge appliance cables with 1/2" conduit connectors
NFXUP...		3 ft [1m], 10 ft [3m] or 16 ft [5m] 18 GA appliance cable, with or without 1/2" conduit connector **-S models:** two 3 ft [1m], 10 ft [3m] or 16 ft [5m] appliance cables with or without 1/2" conduit connectors
Overload protection		electronic throughout 0 to 95° rotation
Control		on/off
Torque		90 in-lb [10 Nm] minimum
Direction of rotation	spring	reversible with CW/CCW mounting
Mechanical angle of rotation		95° (adjustable with mechanical end stop, 35° to 95°)
Running time	motor	< 75 seconds
	spring	20 seconds @ -4°F to 122°F [-20°C to 50°C]; < 60 seconds @ -22°F [-30°C]
Position indication		visual indicator, 0° to 95° (0° is full spring return position)
Manual override		5 mm hex crank (3/16" Allen), supplied
Humidity		max. 95% RH non-condensing
Ambient temperature		-22°F to 122°F [-30°C to 50°C]
Storage temperature		-40°F to 176°F [-40°C to 80°C]
Housing		Nema 2, IP54, Enclosure Type2
Housing material		zinc coated metal and plastic casing
Agency listings †		cULus acc. to UL60730-1A/-2-14, CAN/CSA E60730-1:02, CE acc. to 2004/108/EC & 2006/95/EC
Noise level		<50dB(A) motor @ 75 seconds ≤62dB(A) spring return
Servicing		maintenance free
Quality standard		ISO 9001
Weight		4.15 lbs (1.9 kg), 4.4 lbs (2.0 kg) with switches
† Rated Impulse Voltage 4kV, Type of action 1.AA (1.AA.B for -S version), Control Pollution Degree 3.		
NFBUP-S, NFXUP-S		
Auxiliary switches		2 x SPDT 3A (0.5A) @ 250 VAC, UL approved one set at +10°, one adjustable 10° to 90°

Dimensions (Inches [mm])

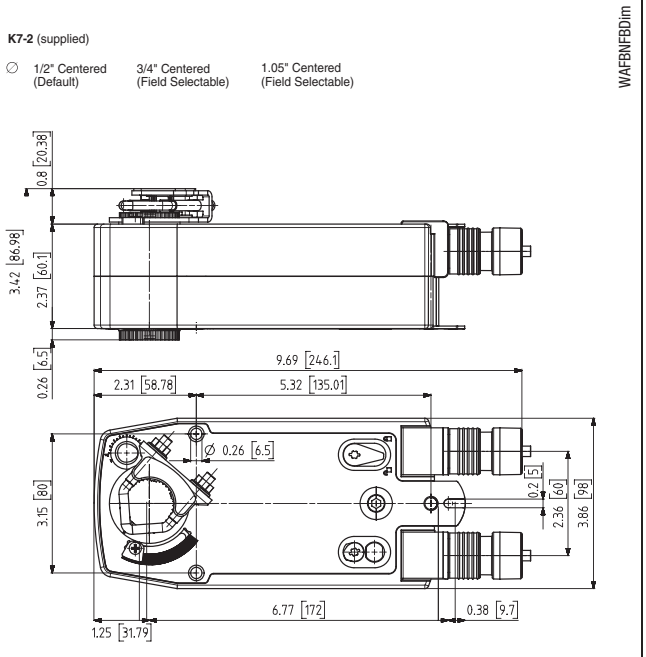

M40024 - 05/10 - Subject to change. © Belimo Aircontrols (USA), Inc.

Accessories

AV 8-25	Shaft extension
IND-AFB	Damper position indicator
K7-2	Universal clamp for up to 1.05" dia jackshafts
KH-AFB	Crank arm
TF-CC US	Conduit fitting
Tool-06	8mm and 10 mm wrench
ZG-100	Universal mounting bracket
ZG-101	Universal mounting bracket
ZG-118	Mounting bracket for Barber Colman® MA 3../4.., Honeywell® Mod III or IV or Johnson® Series 100 replacement or new crank arm type installations
ZG-AFB	Crank arm adaptor kit
ZG-AFB118	Crank arm adaptor kit
ZS-100	Weather shield (metal)
ZS-150	Weather shield (polycarbonate)
ZS-260	Explosion-proof housing
ZS-300	NEMA 4X housing

Note: When using NFBUP, NFBUP-S, NFXUP, NFXUP-S actuators, only use accessories listed on this page.

For actuator wiring information and diagrams, refer to Belimo Wiring Guide.

Typical Specification

On/Off spring return damper actuators shall be direct coupled type which require no crank arm and linkage and be capable of direct mounting to a jackshaft up to a 1.05" diameter. The actuators must be designed so that they may be used for either clockwise or counterclockwise fail-safe operation. Actuators shall be protected from overload at all angles of rotation. If required, two SPDT auxiliary switch shall be provided having the capability of one being adjustable. Actuators with auxiliary switches must be constructed to meet the requirements for Double Insulation so an electrical ground is not required to meet agency listings. Actuators shall be cULus Approved and have a 5 year warranty, and be manufactured under ISO 9001 International Quality Control Standards. Actuators shall be as manufactured by Belimo.

Wiring Diagrams

INSTALLATION NOTES

1 Provide overload protection and disconnect as required.

2 ***CAUTION** Equipment Damage!*
Actuators may be connected in parallel.
Power consumption and input impedance must be observed.

3 No ground connection is required.

4 For end position indication, interlock control, fan startup, etc., NFBUP-S and NFXUP-S incorporates two built-in auxiliary switches: 2 x SPDT, 3A (0.5A) @250 VAC, UL Approved, one switch is fixed at +10°, one is adjustable 10° to 90°.

APPLICATION NOTES

Meets cULus requirements without the need of an electrical ground connection.

***WARNING** Live Electrical Components!*
During installation, testing, servicing and troubleshooting of this product, it may be necessary to work with live electrical components. Have a qualified licensed electrician or other individual who has been properly trained in handling live electrical components perform these tasks. Failure to follow all electrical safety precautions when exposed to live electrical components could result in death or serious injury.

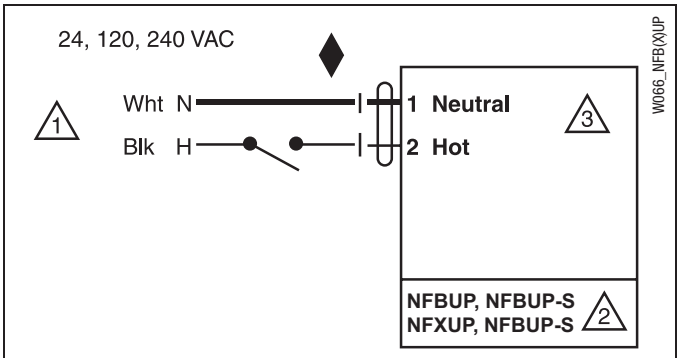

On/Off wiring for NFBUP, NFXUP

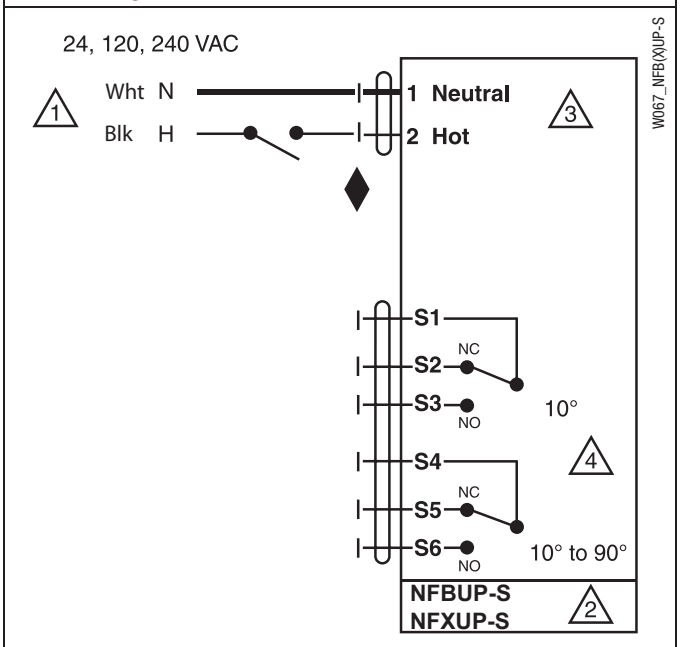

Auxiliary Switches for NFBUP-S, NFXUP-S

M40024 - 05/10 - Subject to change. © Belimo Aircontrols (USA), Inc.

ZS-260 Explosion-proof Housing

For GM..., AM..., SM..., AF..., NF..., LF... actuators

BELIMO

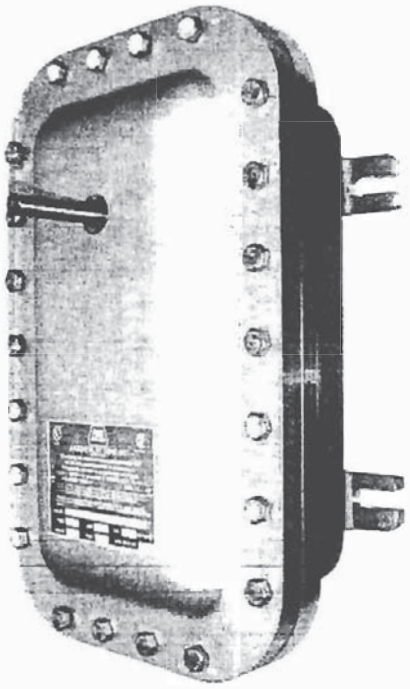

Application

The ZS-260 explosion-proof housing may be used with the GM..., AM..., SM..., AF..., NF..., LF... series actuators. This housing is not designed for direct coupling. It is for use in Class I, II and III hazardous locations. and to meet the requirements for NEMA 4, 7 & 9 type enclosures.

Operation

The ZS-260 enclosure is designed so that the required actuator may be easily field mounted into the enclosure. The actuator is fastened on to the internal portion of the operating shaft and secured at the end with an anti-rotation strap. A crankarm, such as the KH8, is mounted to the external portion of the operating shaft for connection to connection to the damper linkage. ZG-109 right angle, and ZG-110 standoff mounting brackets may be used (see back)

The ZS-260 is designed so that the operating shaft can be mounted on either the front or rear side of the housing.

Accessories

KH8	Universal crankarm
KG8	Universal ball joint
KG10	Universal ball joint
ZG-109	Right angle mounting bracket
ZG-110	Stand-off mounting bracket

Technical Data	ZS-260
Material	Housing: cast, copper-free, aluminum, Cover bolts: stainless steel Operating shaft: stainless steel
Conduit holes	3/4"–14 NPT (2 supplied) see Note 1
Operating shaft diameter	1/2 inch [12.7]
Operating shaft location	Front or rear side of housing (Field selected)
Approved applications	UL & CSA, Class I, II & III; Group B, C, D, E, F & G NEMA 7, Class I, Groups B, C & D NEMA 9, Class II, Groups E, F & G NEMA 4
Weight	31.0 lb. (14.0 kg) without actuator

Note 1: Fittings that meet the requirements of the hazardous location must be used. All applications must comply with applicable local and/or national electric code.

Note: Since conditions of use of this product are outside the control of Belimo, the purchaser should determine suitability of the product for their intended use, and assumes all risk and liability in connection therewith.

Dimensions [All numbers in brackets are in millimeters.]

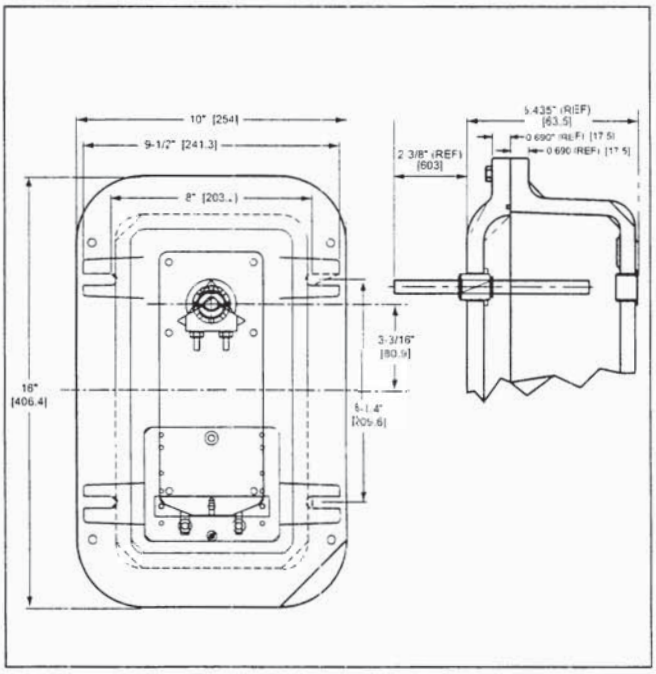

G20492-IG-Subject to change © Belimo Aircontrols (USA), Inc.

ZS-260 Explosion-proof Housing

For GM..., AM..., SM..., AF..., NF..., LF... actuators

ZS-260 Shaft Thru Front

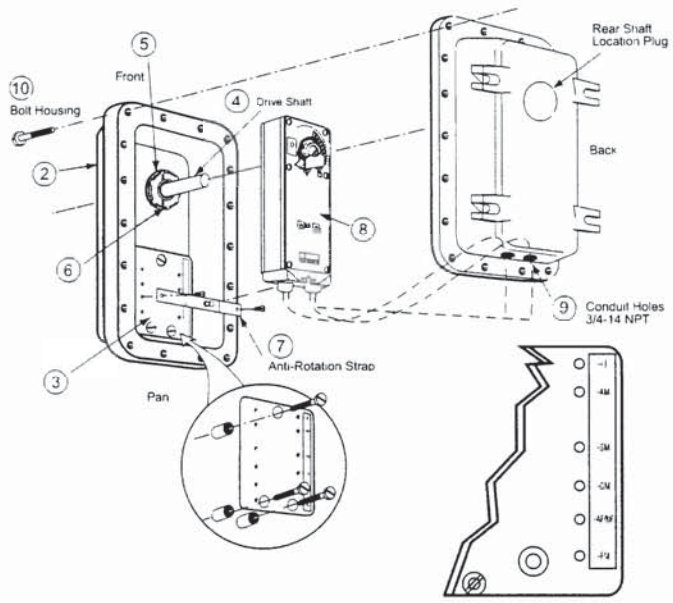

ZS-260 Mounting Instructions

1. Determine proper operating shaft location.
2. Remove threaded plug from the hole in which the operating shaft will be mounted.
3. Install the anti-rotation strap, mounting plate, to the side of the housing where the operating shaft will be mounted.
4. From the inside surface of the housing, insert the operating shaft, short length first, into the mounting hole.
5. Hand tighten the shaft bushing into the housing until the star nut/seal is in contact with the face of the housing.
6. Using a screw driver blade, drive the star nut/seal clockwise until the bushing is locked into place.
7. Install the anti-rotation strap into the mounting plate at the designated holes for the actuator to be used.
8. Install actuator
9. Wire actuator (per electrical code).
10. Bolt housing together

Typical ZG-109 Mounting

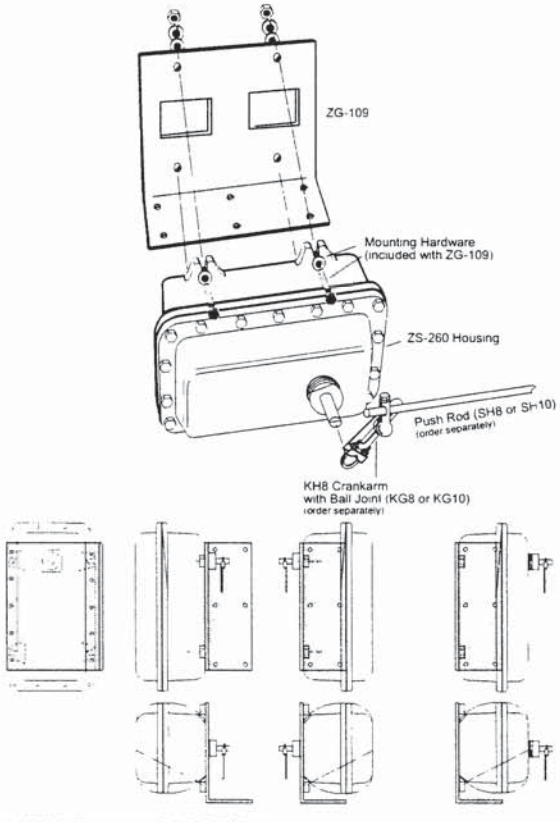

Typical ZG-110 Mounting

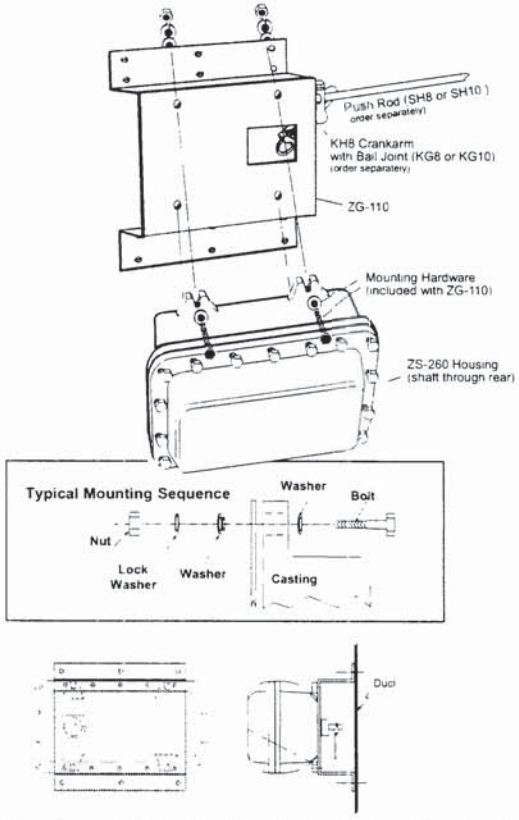

G20492-Subject to change. © Belimo Aircontrols (USA), Inc.

A18 As-Built Clearances

2303-8th Street, Nisku Alberta, T9E-7Z3 CANADA

This section does not apply

A26 Cathodic Protection System Design & Layout

2303-8th Street, Nisku Alberta, T9E-7Z3 CANADA

5Blue
Process Equipment Inc.

See section F15



A31 Detail Fabrication Drawings

2303-8th Street, Nisku Alberta, T9E-7Z3 CANADA

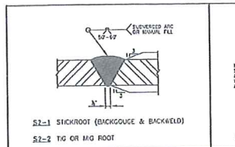

5B-106

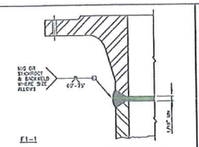

5B-102/5B-103

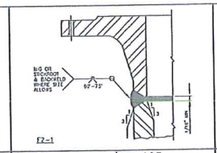

5B-102/5B-103

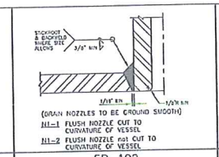

5B-102

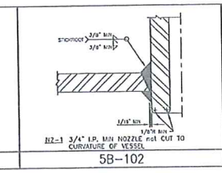

5B-102

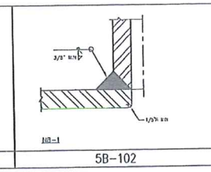

5B-102

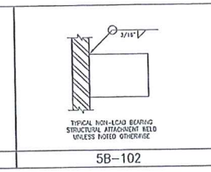

5B-102

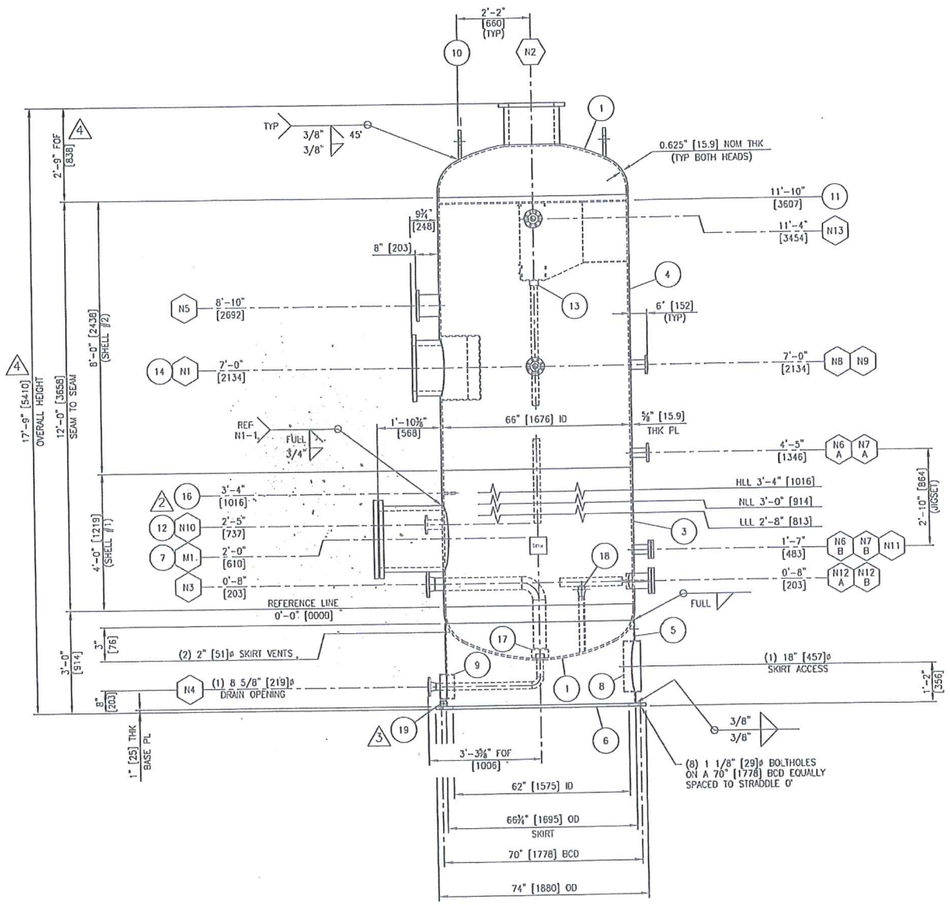

ELEVATION

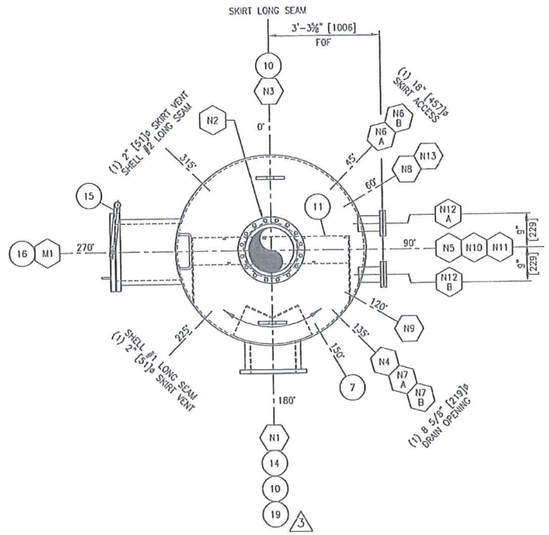

ORIENTATION

NOTES

1) BOLTING TO BE SA-193-B7 AND SA-194-2H MATERIAL.
2) GASKETS TO BE SPIRAL WOUND 316 SS WITH FLEXIBLE CHLORITE FILLER AND CARBON STEEL INNER AND CENTRING RING (PINK STRIPE).
3) SHELLS AND HEADS MATERIAL (ITEMS #1 THROUGH #4) TO BE IMPACT TEST EXEMPT PER UCS-66 CURVE 'D' & FIG UCS-66.1. ALL OTHER COMPONENTS IMPACT TEST EXEMPT PER UCS-66(g).
4) WHEN MIG OR TIG ROOTS ARE USED, PRODUCTION IMPACT TEST COUPONS ARE REQUIRED. WM AND HAZ ARE TO BE IMPACT TESTED, PER UG-84 AND UCS-67(a)(3). TEST TEMP: -50°F TEST RESULTS: 12 ft-lbs MIN. 18 ft-lbs AVG.
5) PRESSURE RETAINING PLATE MATERIAL TO BE ULTRASONICALLY INSPECTED ON A 4" GRID, PER SA-435, FAIOR TO FORMING.
6) ALL CATEGORY 'D' WELDS TO BE ULTRASONICALLY INSPECTED.
7) NOZZLE BUTT WELDS TO BE 100% RT, LONG AND CIRC SEAMS RT PER UW-11(a) TYPE 1.
8) MAGNETIC PARTICLE INSPECT LIFTING AND TAILING LUG WELDS.
9) MIG ROOT TO BE REMOVED BY BACKGOUGING, BACKWELD WITH E7018-1.
10) ONE (1) HOUR CHART RECORDED HYDROTEST REQUIRED (CERTIFIED RECORDER, PRESSURE ONLY).
11) STANDARD FORGINGS SHALL BE IN ACCORDANCE WITH ASME B16.5, 2009 EDITION.
12) SEAL WELD BOTH SIDES OF ALL INTERNAL NON-REMOVABLE ATTACHMENTS WHERE ACCESSIBLE.
13) ALL WELDS AND INTERNAL EDGES TO BE GROUND SMOOTH WITH A 1/8" RADIUS ON CORNERS.
14) SURFACE PREPARATION: PER E&I
15) SURFACE PREPARATION SHALL NOT BE CONDUCTED ON SURFACES THAT ARE LESS THAN 3°F ABOVE DEWPOINT, OR WHEN THE RELATIVE HUMIDITY OF THE AIR IS GREATER THAN 80%.
16) PAINT: PER E&I
17) SHOP NOTE: "FS" DENOTES FAR SIDE.
18) REFER TO DWG# 5B1108-02-DR-20-002 FOR ADDITIONAL DETAILS.
19) REFER TO DWG# 5B1108-02-DR-20-003 FOR VANE PACK DETAILS.

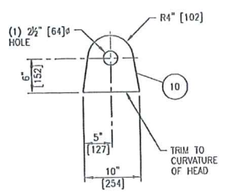

LIFT LUG DETAIL
1. SCALE: 1"=1'-0"

PROFESSIONAL ENGINEER ALBERTA RICK CROOK

07/05/2014

Rick Crook

WELDING DATA		VESSEL SERIAL NUMBER:	5B1108-20
		SERVICE:	SWEET
WELDING PROCEDURES:	WP-3146.2		
REF. DRAWING NUMBER:	5B-0001 (FABRICATION TOLERANCES FOR PRESSURE VESSELS)		
LONG SEAM WPS:	5B-106		
CIRC. SEAM WPS:	5B-106		
NOZZLE TO FLG WPS:	5B-102/5B-103		
OTHER WELD WPS:	5B-102 (SEE NOTE #9)		
PRE-HEAT TO:	50°F (10°C) MIN.		

NDE & TESTING DATA

QUALITY CONTROL PROGRAM: AQP-1507
HYDROSTATIC TEST PRESSURE 260 PSIG (1793 kPag) (SEE NOTE #10)
RADIOGRAPHY: FULL PER UW-11(a) TYPE 1, INCLUDING NOZZLE BUTT WELDS
IMPACT TESTS: SEE NOTES #3 & #4

DESIGN DATA

CODE: ASME SECTION VIII, DIV. 1, 2010 EDITION 2011(a) ADDENDA
DESIGN PRESS. 200 PSIG (1379 kPag), DESIGN TEMP. 302 °F (150 °C)
EXTERNAL PRESS. 15 PSIG (103 kPag), DESIGN TEMP. 302 °F (150 °C)
MIN. DESIGN METAL TEMP. -50 °F @ 200 PSIG (-46 °C @ 1379 kPag)
MAWP 200 PSIG @ 302 °F (1379 kPag @ 150 °C), (LTD BY: DESIGN)
MAP NEW & COLD 200 PSIG @ 70 °F (1379 kPag @ 21 °C)
CORROSION ALLOW. 0.125 " (3.2 mm)
PWHT NONE
HEAD # 1&2 THK NOM. 0.625 " (15.9 mm), MIN. 0.53125 " (13.5 mm)
HEAD # -- THK NOM. -- " (-- mm), MIN. -- " (-- mm)
SHELL # 1&2 THK NOM. 0.625 " (15.9 mm), MIN. 0.625 " (15.9 mm)
SHELL # -- THK NOM. -- " (-- mm), MIN. -- " (-- mm)
MASS (EMPTY) 11 260 lbs (5107 kg), MASS (HYDRO) 32 540 lbs (14 760 kg)
VOLUME 341 cu. ft (9.7 cu. m)

BILL OF MATERIALS

ITEM NO.	PART	DESCRIPTION	QTY	MATERIAL	WELD SYMBOL
1	HEADS	66" ID x 0.625" NOM THK 2:1 SE HEAD w/2" SF	2	SA-51670N	S2-2
		(HOT FORMED)			
3	SHELL #1	66" ID x 5/8" PL x 4'-0" LG (BBE)	1	SA-51670N	S2-1/S2-2
4	SHELL #2	66" ID x 5/8" PL x 8'-0" LG (BBE)	1	SA-51670N	S2-1/S2-2
5	SKIRT	66" ID x 3/8" PL x 2'-6"± LG (PBE)	1	SA-51670N	S2-1/S2-2
6	BASE PLATE	74" OD x 1" PL x 62" ID	1	SAG40.2144W	
7	NAME PLATE	5BLUE STANDARD NAME PLATE c/w 'T' BRACKET	1	SAG40.2150W	
8	SKIRT ACCESS	18" SCH STD ERW PIPE x 6" LG (PBE)	1	SA-53B	
9	DRAIN OPENING	8" SCH 40 ERW PIPE x 5" LG (PBE)	1	SA-53B	
10	LIFT LUGS	10" x 1" PL x 10" LG (SEE DETAIL)	2	SA-51670N	
11	VANE PACK	REFER TO DWG 5B1108-02-DR-20-003	1		
12	VANE PACK DRAIN	2" CL 3000 NPT HALF CPLG	1	SA-350LF2CL1	N8-1
13	VANE PACK DRAIN PIPE	2" SCH 80 SMLS PIPE x 6'-8 1/4" LG (MTOExPOE)	1	SA-312TP316	
14	INLET DEFLECTOR	REFER TO DWG 5B1108-02-DR-20-002	1		
15	DAWT	REFER TO DWG 5B1108-02-DR-20-002	1		
16	GRAB BAR	REFER TO DWG 5B1108-02-DR-20-002	1		
17	VORTEX BREAKER	REFER TO DWG 5B1108-02-DR-20-002	1		
18	ANODE SUPPORT	REFER TO DWG 5B1108-02-DR-20-002	2		
19	GROUNDING LUG	REFER TO DWG 5B1108-02-DR-20-002	1		
N1	INLET	16" CL 150 RFHB FLG x 11 7/8" LG	1	SA-350LF2CL1	N1-1
N2	GAS OUTLET	16" CL 150 RFHB FLG x 1'-3 3/8"± LG	1	SA-350LF2CL1	N1-2
N3	LIQUID OUTLET	4" CL 150 SCH 160 RFWN FLG	1	SA-350LF2CL1	F1-1
		4" SCH 160 SMLS PIPE x 2'-6 5/8" LG (BBE)	1	SA-333GR6	N2-1
		4" SCH 80 90° LRBW ELL	1	SA-420WPL6	F2-1
		4" SCH 80 SMLS PIPE x 1'-5" LG (BOExPOE)	1	SA-333GR6	F1-1
N4	DRAIN	2" CL 300 SCH 160 RFWN FLG	1	SA-350LF2CL1	F1-1
		2" SCH 160 SMLS PIPE x 2'-9 7/8" LG (BBE)	1	SA-333GR6	F1-1
		2" SCH 160 90° LRBW ELL	1	SA-420WPL6	F1-1
		2" SCH 160 SMLS PIPE x 6 1/2"± LG (BOExPOE)	1	SA-333GR6	N1-1
N5	PSV-1610E	6" CL 150 RFLWN FLG x 8 7/8" LG	1	SA-350LF2CL1	N1-2
N6	LIT-1610	2" CL 300 RFLWN FLG x 6 5/8" LG	2	SA-350LF2CL1	N1-2
N7	LIT-1610B	2" CL 300 RFLWN FLG x 6 5/8" LG	2	SA-350LF2CL1	N1-2
N8	PG-1610D/PIT-1610C	2" CL 300 RFLWN FLG x 6 5/8" LG	1	SA-350LF2CL1	N1-2
N9	TIT/TE/TW-1610A	2" CL 300 RFLWN FLG x 6 5/8" LG	1	SA-350LF2CL1	N1-2
N10	TG/TW-1610B	2" CL 300 RFLWN FLG x 6 5/8" LG	1	SA-350LF2CL1	N1-2
N11	SPARE	2" CL 300 RFLWN FLG x 6 5/8" LG	1	SA-350LF2CL1	N1-2
		2" CL 300 RF BLIND FLG	1	SA-350LF2CL1	
		2" CL 300 RF x 1/8" THK GASKET	1	NOTE #2	
		5/8"ø x 3 1/2" LG STUDS c/w (2) HEX NUTS EACH	8	NOTE #1	
N12	ANODES	4" CL 150 RFLWN FLG x 8 3/4" LG	2	SA-350LF2CL1	N1-2
N13	PURGE	2" CL 300 RFLWN FLG x 6 5/8" LG	1	SA-350LF2CL1	N1-2
M1	MANWAY	20" CL 150 RFHB FLG x 2'-1 1/8" LG	1	SA-350LF2CL1	SEE M1
		20" CL 150 RF BLIND FLG	1	SA-350LF2CL1	
		20" CL 150 RF x 1/8" THK GASKET	1	NOTE #2	
		1 1/8"ø x 6 1/4" LG STUDS c/w (2) HEX NUTS EACH	20	NOTE #1	

REV. NO.	REVISION	BY	CHECKED	DATE
8	AS BUILT	TBB		01/11/13
7	NOZZLE N4 WAS CL 150	TBB		22/08/13
6	NOZZLE N11 BLIND FLG AND GSKT DESC SHOWED CL 150	TBB		21/08/13
5	REWSED NOTE #3, ADDED NOTE #4, RENUMBERED NOTES #5 THROUGH #20	TBB		15/08/13
4	NOZZLE N2 HAD AN OUTSIDE PROJECTION OF 3'-6" FROM CIRC SEAM	TBB		31/07/13
3	REV TAGGING FOR NOZZLES N8 THROUGH N11, ADDED BLIND FLG FOR N11 & ITEM #19	TBB		22/07/13
2	N10 WAS AT 2'-0" ELEVATION	TBB		11/07/13
1	ISSUED FOR CONSTRUCTION	TBB		09/07/13
0	ISSUED FOR LONG SEAM WELDING ONLY	TBB		12/06/13
A	ISSUED FOR APPROVAL	TBB		23/05/13

5Blue Process Equipment Inc.

5Blue Process Equipment Inc.
2303-8 St Nisku, Alberta, Canada - Phone 780.955.2040
www.5Blue.com

THIS DRAWING IS THE EXCLUSIVE PROPERTY OF 5BLUE PROCESS EQUIPMENT INC., AND MAY NOT BE COPIED OR COMMUNICATED TO A THIRD PARTY WITHOUT THE WRITTEN AUTHORIZATION OF 5BLUE PROCESS EQUIPMENT INC.

CUSTOMER	DEVON NEC CORPORATION
CUSTOMER REF. NO.	407014-00120
JOB NO.	5B1108-20
PROJECT	FERRIER CENTRAL PROCESSING FACILTY LOCATION: LSD 11-02-038-08 W5M
TITLE	COMPRESSED CARDIUM GAS SEPARATOR (002-V-01-1610) 66" ID x 12'-0" S/S x 200 PSIG @ -50°F/302°F 1676 mm ID x 3658 mm S/S x 1379 kPag @ -46°C/150°C

DRAWN	CHECKED	APPROVED	SCALE	DATE	DRAWING NUMBER	SHT	REV
TBB			1/2" = 1'-0"	07/05/13	5B1108-02-DR-20-001	003	8

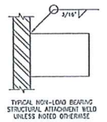

5B-102

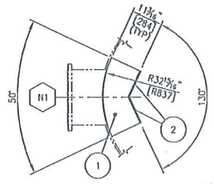

A 002 SECTION "A-A" A 002
SCALE: 1/2"=1'-0"

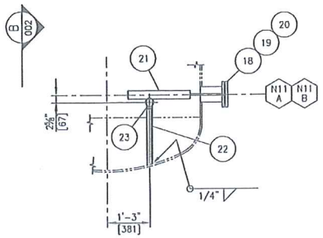

ANODE DETAIL
1. SCALE: 1/2"=1'-0"

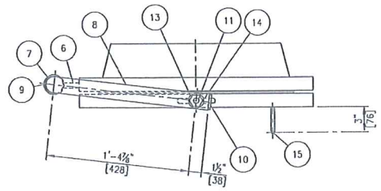

DAVIT
PLAN VIEW
1. SCALE: 1 1/2"=1'-0"

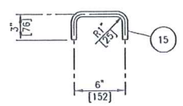

DAVIT HANDLE DETAIL
1. SCALE: 1 1/2"=1'-0"

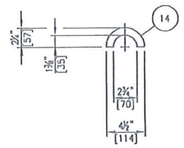

DAVIT LUG DETAIL
1. SCALE: 1 1/2"=1'-0"

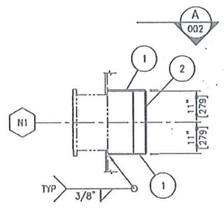

INLET DEFLECTOR DETAIL
1. SCALE: 1/2"=1'-0"

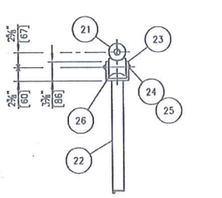

B 002 SECTION "B-B" B 002
SCALE: 1"=1'-0"

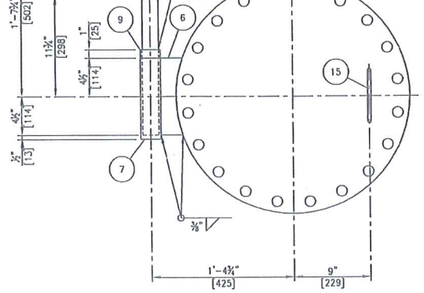

DAVIT
ELEVATION VIEW
1. SCALE: 1 1/2"=1'-0"
2. SHOP TO VERIFY DAVIT ORIENTATION FROM VESSEL DWG ORIENTATION VIEW.

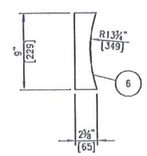

DAVIT SUPPORT DETAIL
1. SCALE: 1 1/2"=1'-0"

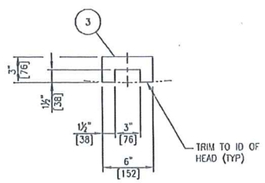

VORTEX BREAKER
DETAIL
1. SCALE: 1 1/2"=1'-0"

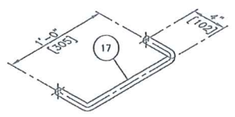

GRAB RUNG DETAIL
1. SCALE: NTS

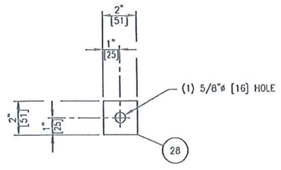

1 GROUNDING LUG DETAIL
1. SCALE: 3"=1'-0"



NOTES
1) SHOP NOTE: "FS" DENOTES FAR SIDE.
2) REFER TO DWG# 5B1108-02-DR-20-001 FOR VESSEL DETAILS.
3) REFER TO DWG# 5B1108-02-DR-20-003 FOR VANE PACK DETAILS.

BILL OF MATERIALS

ITEM NO.	PART	DESCRIPTION	QTY	MATERIAL	WELD SYMBOL
1	INLET DEF TOP & BTM PL	1'-1 1/4" x 3/8" PL x 2'-3 7/8" LG (SEE DETAIL)	2	SA-51670N	
2	INLET DEF SIDE PL	10" x 3/8" PL x 1'-10" LG	2	SA-51670N	
3	VORTEX BREAKER	3" x 3/8" PL x 6" LG (SEE DETAIL)	1	SA-51670N	
4					
5					
6	DAVIT SUPPORT	2 5/8" x 5/8" PL x 9" LG	1	SA-51670N	
7	DAVIT ARM SLEEVE	2" SCH XH SMLS PIPE x 9 1/2" LG (PBE)	1	SA-106B	
8	DAVIT ARM	1 1/2" SCH XXH SMLS PIPE x 3'-7" LG (PBE)	1	SA-106B	
9	DAVIT ARM RING	2 1/2" SCH 160 SMLS PIPE x 1" LG (PBE)	1	SA-106B	
10	DAVIT ARM END PL	1 3/4" OD x 1/4" PL	1	SA-51670N	
11	DAVIT EYE BOLT	5/8"ø REGULAR PATTERN EYE BOLT x 8" LG c/w	1	CS	
		(2) HEX NUTS EACH			
13	EYE BOLT WASHER	5/8"ø FLAT WASHER	1	CS	
14	DAVIT LUG	7/8" x 5/8" PL x 7" LG	1	SA-51670N	
15	DAVIT HANDLE	5/8"ø RB x 1'-1" LG (FORM)	1	SAG40.2144W	
16	GREASE NIPPLES	1/4"NPS GREASE NIPPLES (SHOP LOCATE)	1	CS	
17	GRAB RUNG	1"ø RB x 1'-8" LG (FORM)	1	SAG40.2144W	
18	ANODE BLIND FLANGE	4" CL 150 RF ANODE TANK FLG	2	SA-350LF2CL1	
19	ANODE GASKET	4" CL 150 RF x 1/8" THK GASKET	2	NOTE #2	
20	ANODE BOLTING	5/8"ø x 3 1/2" LG STUDS c/w (2) HEX NUTS EACH	16	NOTE #1	
21	ANODE	3" TREATER 11-220-46 ASSEMBLY	2	GALVALUME III	
22	ANODE SUPPORT	2" x 2" x 3/8" ANGLE x 1'-6"± LG	2	SAG40.2144W	
23	ANODE SUPPORT	2" x 3/8" PL x 11" LG (FORM CHANNEL)	2	SAG40.2144W	
24	ANODE SUPPORT	5/8"ø x 6" LG CAPSCREW	2	304 SS	
25	ANODE SUPPORT	11/16" STAINLESS STEEL WASHERS	4	304 SS	
26	ANODE ROLLER	3"ø STANDARD ANODE ROLLER	2	CEDAR	
27	ANODE INSULATION	ANODE INSULATING FLANGE KIT (21-999-97)	2		
28	GROUNDING LUG	2" x 3/8" FB x 2" LG (SEE DETAIL)	1	SAG40.2144W	

REV. NO.	REVISION	BY	CHECKED	DATE
2	AS BUILT	TBB		01/11/13
1	ADDED GROUNDING LUG (ITEM #28)	TBB		22/07/13
0	ISSUED FOR CONSTRUCTION.	TBB		09/07/13
A	ISSUED FOR APPROVAL	TBB		23/05/13

5Blue Process Equipment Inc.

5Blue Process Equipment Inc.
2303-8 St Nisku, Alberta, Canada - Phone 780.955.2040
www.5Blue.com

THIS DRAWING IS THE EXCLUSIVE PROPERTY OF 5BLUE PROCESS EQUIPMENT INC., AND MAY NOT BE COPIED OR COMMUNICATED TO A THIRD PARTY WITHOUT THE WRITTEN AUTHORIZATION OF 5BLUE PROCESS EQUIPMENT INC.

CUSTOMER: DEVON NEC CORPORATION
CUSTOMER REF. NO.: 407014-00120
JOB NO.: 5B1108-20
PROJECT: FERRIER CENTRAL PROCESSING FACILTY
LOCATION: LSD 11-02-038-08 W5M
TITLE: COMPRESSED CARDIUM GAS SEPARATOR (002-V-01-1610)
ADDITIONAL DETAILS

DRAWN	CHECKED	APPROVED	SCALE	DATE	DRAWING NUMBER	SHT NO.	REV
TBB			AS SHOWN	15/05/13	5B1108-02-DR-20-002	003	2

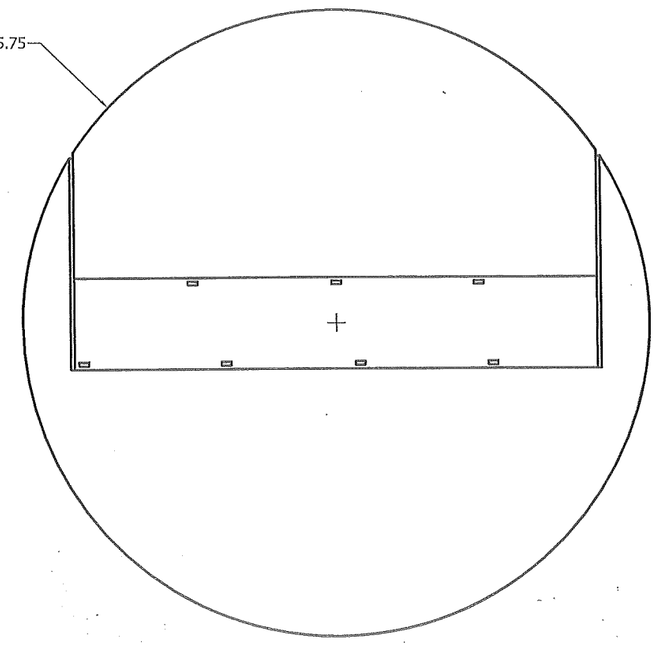

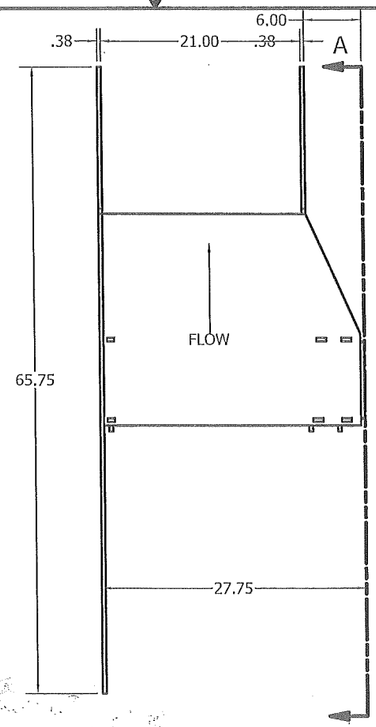

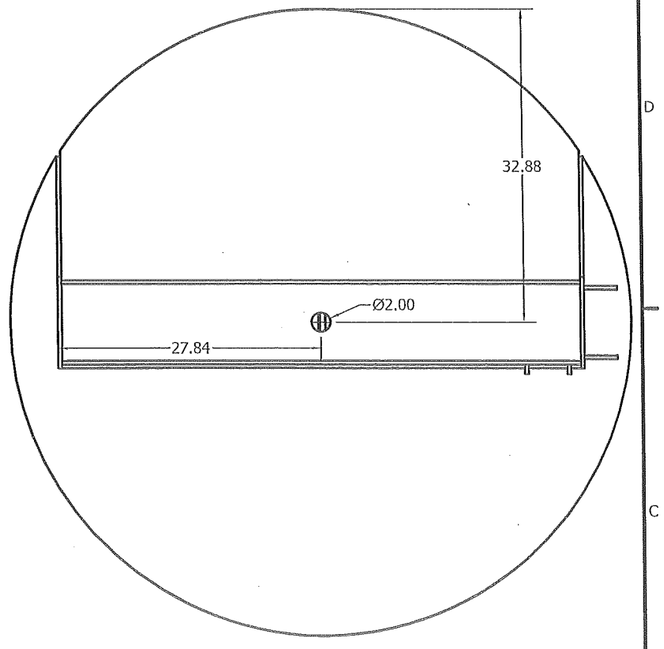

VIEW A-A
SCALE 1/10

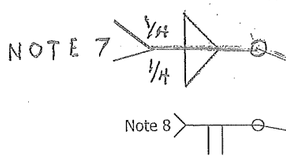

Note 8

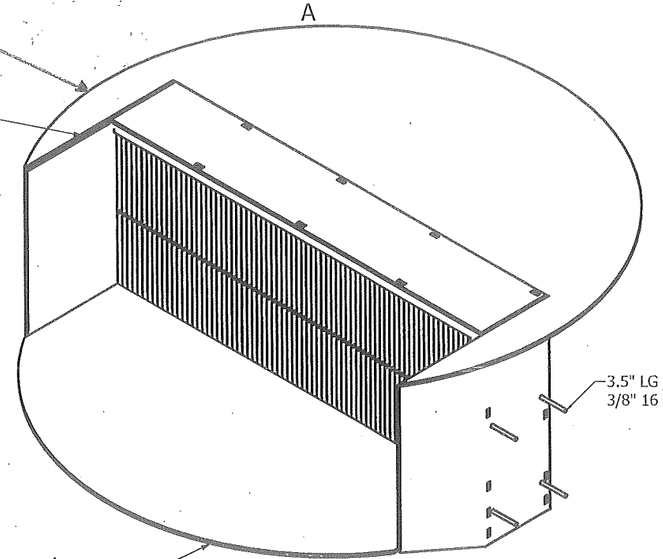

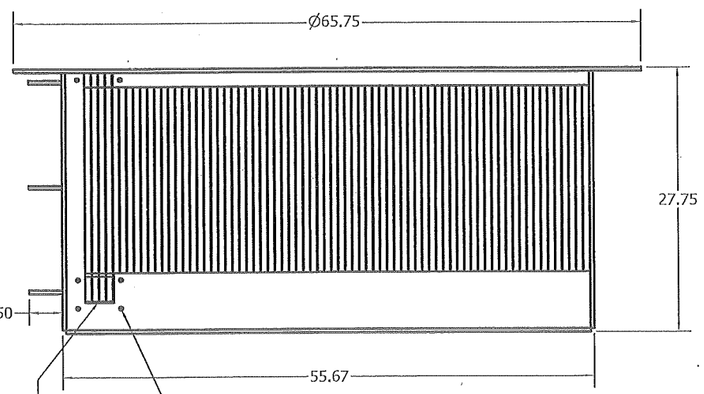

Openings for removal/insertion of removable vanes, to be sealed with supplied gates

1" studs for securing gate seals 3/8" 16UNC

Note 7

NOTES:

1) All dimensions are inches.
2) All housing material is 3/8" TH 516-70N
3) All vane material to be 316L SS.
4) Approx. weight 990 lbs
5) For Installation into a 66" ID Top Out Vertical vessel
6) Vanes Removable
7) Welds to shell be fabricator
8) Welds by fabricator

This Drawing is the property of Petromesh Inc. and is not to be reproduced or used in any way without the prior written consent of Petromesh Inc. www.petromesh.com

Sold by Industrial Process Products Ltd.
10580 48 St SE Calgary, Alberta T2C 2B8
403 301-0111

DRAWN	GarySmyth	23/05/2013
CHECKED		
QA		
MFG		
APPROVED		

petroMESH Inc.

TITLE: Petromesh Enhanced Double Pocket Vane
5V-72-24-60ID - VGS
5Blue PO: P6862-5B1106-20
Removable Vanes
5Blue Dwg # 5B1108-02-DR-20-003 Rev 1

SIZE	DWG NO	REV
C	5V-72-24-66ID	0

SCALE | SHEET 1 OF 1

B. QA/QC RECORDS

2303-8th Street, Nisku Alberta, T9E-7Z3 CANADA

5Blue
Process Equipment Inc.

B1 Hydro-test Certificate

2303-8th Street, Nisku Alberta, T9E-7Z3 CANADA

5Blue
Process Equipment Inc.

JOB NUMBER: 1107/1108-80

TEST DATE: Dec. 12/13

DESCRIPTION: Process Piping

HYDROTEST PROCEDURE / REPORT

DESIGN PRESSURE: 285 psi

TEST PRESSURE: 428 psi

DESIGN TEMPERATURE: 100°F

TEST TEMPERATURE: 60°F/ shop

MINIMUM HOLD TIME: 1 hour

RECORDER REQUIRED: ☑ YES ☐ NO

START TIME: 9am

END TIME: 2pm

PREPARED BY: Chris Michalkow

ADDITIONAL INFORMATION:

Test medium used: Water

Drawing No: 5B1107-02-DR-80-003-3 Rev1
5B1108-02-DR-80-XXX

Gauge #1: 5B-B3

Gauge #2: 5B-DG-3K

Chart Recorder #: 5B-DG-3k

TEST RESULTS:

- Acceptable; no leaks detected.

ACCEPTANCE

QUALITY CONTROL INSPECTOR: [signature] Print: AARRON SUBCHUK
QUALITY CONTROL
TEL: 780-955-2040

CUSTOMER REPRESENTATIVE: [signature] Print: Dan de Groot

AUTHORIZED INSPECTOR: _____ Print: _____

COMMENTS:

1108: 13A, 15A, 16A

1107: 3G

5Blue
Process Equipment Inc.

Hydrotest: Job # 5B1107-80
Date: 12-Dec-13
Client: Devon
Dwg #s : 5B1107-02-DR-80-003-3 Rev 1
Items: Spool

Comments: Spool #3G

Test Paramenters
Test Pressure: 428 PSI
Duration: 1 hour (minimum)
Medium: Water

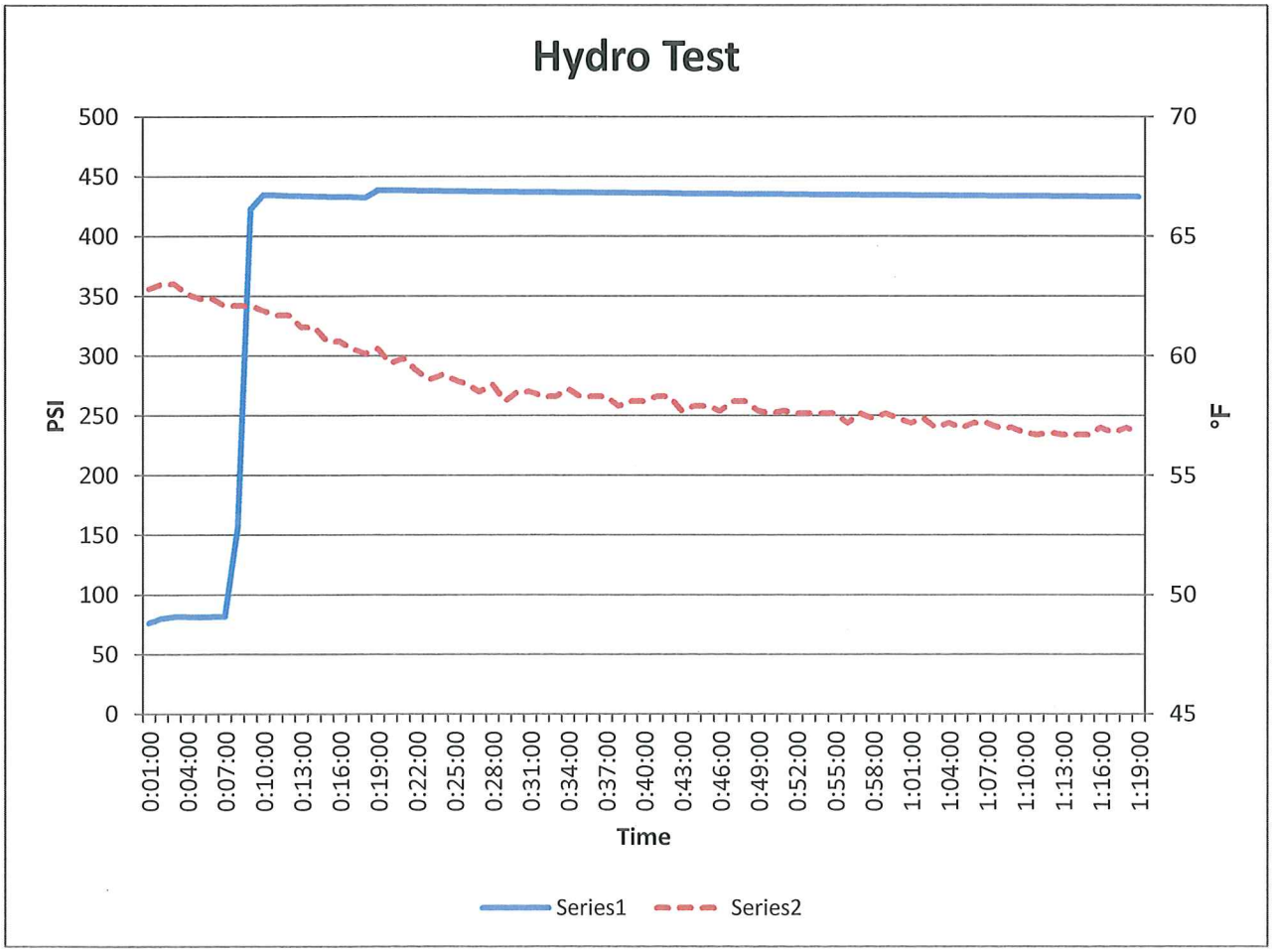

5Blue Job #:	5B1107-80		
Gauge:	WIKA, CPG1000, 2220063, 4.04		
Log Type:	CONTINUOUS		
Sample Type:	INTERVAL END		
Interval:	1 minutes		
Unit:	PSI		
Custom Factor:	1.000 / psi		0
Trip Setpoint:	0.0 PSI		
Trip Reset:	0.0 PSI		
Initial Zero:	-0.0 PSI	Min Temp	56.7
Initial Tare:	0.0 PSI	Max Temp	63

	Time	PSI		°F
Pressure	0:01:00	76.3	Temperature	62.8
Pressure	0:02:00	79.9	Temperature	63
Pressure	0:03:00	81.5	Temperature	63
Pressure	0:04:00	81.5	Temperature	62.6
Pressure	0:05:00	81.4	Temperature	62.4
Pressure	0:06:00	81.6	Temperature	62.4
Pressure	0:07:00	81.6	Temperature	62.1
Pressure	0:08:00	156.4	Temperature	62.1
Pressure	0:09:00	422.8	Temperature	62.1
Pressure	0:10:00	434.9	Temperature	61.9
Pressure	0:11:00	434.4	Temperature	61.7
Pressure	0:12:00	433.9	Temperature	61.7
Pressure	0:13:00	433.7	Temperature	61.2
Pressure	0:14:00	433.4	Temperature	61.2
Pressure	0:15:00	433.3	Temperature	60.6
Pressure	0:16:00	433	Temperature	60.6
Pressure	0:17:00	432.8	Temperature	60.3
Pressure	0:18:00	432.4	Temperature	60.1
Pressure	0:19:00	438.9	Temperature	60.3
Pressure	0:20:00	438.6	Temperature	59.7
Pressure	0:21:00	438.5	Temperature	59.9
Pressure	0:22:00	438.2	Temperature	59.4
Pressure	0:23:00	438.1	Temperature	59
Pressure	0:24:00	437.9	Temperature	59.2
Pressure	0:25:00	437.8	Temperature	59
Pressure	0:26:00	437.6	Temperature	58.8
Pressure	0:27:00	437.5	Temperature	58.5
Pressure	0:28:00	437.4	Temperature	58.8
Pressure	0:29:00	437.3	Temperature	58.1
Pressure	0:30:00	437.2	Temperature	58.5
Pressure	0:31:00	437	Temperature	58.5
Pressure	0:32:00	436.9	Temperature	58.3
Pressure	0:33:00	436.8	Temperature	58.3

	Time	PSI		°F
Pressure	0:34:00	436.7	Temperature	58.6
Pressure	0:35:00	436.7	Temperature	58.3
Pressure	0:36:00	436.6	Temperature	58.3
Pressure	0:37:00	436.5	Temperature	58.3
Pressure	0:38:00	436.3	Temperature	57.9
Pressure	0:39:00	436.3	Temperature	58.1
Pressure	0:40:00	436.1	Temperature	58.1
Pressure	0:41:00	436	Temperature	58.3
Pressure	0:42:00	436	Temperature	58.3
Pressure	0:43:00	435.9	Temperature	57.7
Pressure	0:44:00	435.7	Temperature	57.9
Pressure	0:45:00	435.7	Temperature	57.9
Pressure	0:46:00	435.6	Temperature	57.7
Pressure	0:47:00	435.6	Temperature	58.1
Pressure	0:48:00	435.4	Temperature	58.1
Pressure	0:49:00	435.3	Temperature	57.7
Pressure	0:50:00	435.2	Temperature	57.6
Pressure	0:51:00	435.2	Temperature	57.7
Pressure	0:52:00	435.1	Temperature	57.6
Pressure	0:53:00	435	Temperature	57.6
Pressure	0:54:00	434.9	Temperature	57.6
Pressure	0:55:00	434.9	Temperature	57.6
Pressure	0:56:00	434.7	Temperature	57.2
Pressure	0:57:00	434.7	Temperature	57.6
Pressure	0:58:00	434.6	Temperature	57.4
Pressure	0:59:00	434.5	Temperature	57.6
Pressure	1:00:00	434.5	Temperature	57.4
Pressure	1:01:00	434.4	Temperature	57.2
Pressure	1:02:00	434.3	Temperature	57.4
Pressure	1:03:00	434.3	Temperature	57
Pressure	1:04:00	434.2	Temperature	57.2
Pressure	1:05:00	434.1	Temperature	57
Pressure	1:06:00	434	Temperature	57.2
Pressure	1:07:00	434	Temperature	57.2
Pressure	1:08:00	433.8	Temperature	57
Pressure	1:09:00	433.8	Temperature	57
Pressure	1:10:00	433.8	Temperature	56.8
Pressure	1:11:00	433.6	Temperature	56.7
Pressure	1:12:00	433.6	Temperature	56.8
Pressure	1:13:00	433.5	Temperature	56.7
Pressure	1:14:00	433.4	Temperature	56.7
Pressure	1:15:00	433.4	Temperature	56.7
Pressure	1:16:00	433.3	Temperature	57
Pressure	1:17:00	433.3	Temperature	56.8
Pressure	1:18:00	433.2	Temperature	57
Pressure	1:19:00	433.1	Temperature	56.8

TARPON
ENERGY SERVICES LTD.

CALIBRATION REPORT

PREPARED FOR 5 BLUE

INSTRUMENT INFORMATION

MANUFACTURER: **WIKA**	MODEL NUMBER: **4" FACE ½ " NPT**
SERIAL NUMBER: **5B-B3**	WORK TICKET: **11470**
TYPE: **PRESSURE GAUGE**	RANGE: **0-1000 PSI**
CALIBRATION DATE: **12-Aug-2013**	CALIBRATION DUE DATE: **12-Aug-2014**

CALIBRATION DATA

TEST POINT	AS FOUND	AS LEFT
0%	--	0
20%	--	200
50%	--	500
80%	--	800
100%	--	1000

TEST EQUIPMENT USED

SERIAL NO.	MAKE	MODEL NO.	CALIBRATION DATE
TE-SHOP2	CRSYTAL	XP2I	9-Aug-2013

COMMENTS: The instrument was calibrated against laboratory standards that are either traceable to the National Institute of Standards and Technology, (NIST), National Research Council, (NRC), or are derived by approved ratio techniques.

CALIBRATION TECHNICIAN: **Justin Palermo**

TARPON ENERGY SERVICES LTD.

ISO 9001: 2008 Certified

Certificate of Calibration

For Instrument :	WIKA CPG1000-BES-AIZZM3-Z
Customer Name :	5BLUE PROCESS EQUIPMENT
Description :	DIGTAL TEST GAUGE
Asset Number :	5B-DG-3K
Serial Number :	2220063
Certificate # :	9781-1

TARPON ENERGY SERVICES LTD. Certifies that...

the above described instrument met or exceeded all published (OEM) specifications at the time of calibration specified below; and has been calibrated using standards whose accuracies are traceable to the National Institute of Standards and Technology (NIST) and or National Research Council (NRC), or have been derived from accepted values or physical constants, or have been derived by ratio or self calibration techniques.

CALIBRATION INFORMATION

Cal Date Time	10-May-2013 10:58:56	Temperature	23.00°C	Work Order #	9781
Next Cal Due	10-May-2014	Humidity	40 %		
Pass	Y	Tech	Chuck Hwang		
Seals OK	Y	Note	N/A		
Cal Procedure	WIKA DIGITAL TEST GAUGE 3000PSI: (1 YEAR) CAL VER			Revision	1.0

STANDARDS USED FOR CALIBRATION

Asset Number	Serial No.	Mfg	Model	Description	Cal. Date	Due Date
N-12	351	DH INST.	7202-M	Deadweight Base	10/9/2012	10/9/2013
N-14	592	DH INST.	PC-7300-2	Piston Cylinder	10/11/2012	10/11/2013
N-16	544	DH INST.	PG7000	Mass Carrying Bell	10/9/2012	10/9/2013
N-17	2199	DH INST.	MS-7002-35	35 kg Mass Set	10/10/2012	10/10/2013

Calibration Technician

Quality Assurance Approval

Tarpon Energy Services Ltd., 1409 6Street, Nisku, AB.
T9E7M7,

TARPON ENERGY SERVICES LTD.

ISO 9001: 2008 Certified

Calibration Results

For Instrument : WIKA CPG1000-BES-AIZZM3-Z
DIGTAL TEST GAUGE
Serial No: 2220063
Asset No. 5B-DG-3K
Cal. Date : 10-May-2013
Cal. Due Date : 10-May-2014
Customer : 5BLUE PROCESS EQUIPMENT

Notes: N/A

Result: PASS
Performed on: 5/10/2013 at 10:58:56
Performed by: Chuck Hwang
Environment: Temp. 23.0°C Humid. 40 %
Condition F/L: FOUND-LEFT
Certificate # : 9781-1
Work Order # : 9781

Standards Used

Asset Number	Serial No.	Mfg	Model	Description	Cal. Date	Due Date
N-12	351	DH INST.	7202-M	Deadweight Base	10/9/2012	10/9/2013
N-14	592	DH INST.	PC-7300-2	Piston Cylinder	10/11/2012	10/11/2013
N-16	544	DH INST.	PG7000	Mass Carrying Bell	10/9/2012	10/9/2013
N-17	2199	DH INST.	MS-7002-35	35 kg Mass Set	10/10/2012	10/10/2013

Test Results

Test Description	True Value	Test Result	Lower limit	Upper limit	% Tol	P / F
PRESSURE TESTS						
TEST POINT 0.0 psi		0.0	-1.5	1.5	0	P
TEST POINT 750.0 psi		749.6	748.5	751.5	26.7	P
TEST POINT 1500.0 psi		1499.6	1498.5	1501.5	26.7	P
TEST POINT 2250.0 psi		2249.5	2248.5	2251.5	33.3	P
TEST POINT 3000.0 psi		2999.3	2998.5	3001.5	46.7	P

End of Test Data

- If AS FOUND/AS LEFT is not listed separately, this means that no adjustment has been made and AS FOUND = AS LEFT.
- The ERROR % TOL field contains the error as a percentage of the tolerance, and gives a quick impression of how close the instrument is to the allowed tolerance

If there are any questions about tolerances, or the certificate please call (780)466-6000.

5Blue
Process Equipment Inc.

JOB NUMBER: 1108-80 (DEVON)

TEST DATE: 28 OCT 2013

DESCRIPTION: SPOOL # 7C

HYDROTEST PROCEDURE / REPORT

DESIGN PRESSURE: 285 PSI

TEST PRESSURE: 428 PSI

DESIGN TEMPERATURE: 100°F

TEST TEMPERATURE: (SEE CHART)

MINIMUM HOLD TIME: 1 HOUR

RECORDER REQUIRED: ☑ YES ☐ NO

START TIME: 0830 HRS

END TIME: 1030 HRS

PREPARED BY: K. BERGSTROM

ADDITIONAL INFORMATION:

Test medium used: Water

Drawing No: 5B1108-02-DR-80-007-2 REV 1

Gauge #1: 5B-DG-3K

Gauge #2: 5B-B2

Chart Recorder #: 5B-DG-3K

TEST RESULTS:

- Acceptable; no leaks detected.

ACCEPTANCE

QUALITY CONTROL INSPECTOR: _____ Print: A. NGO

CUSTOMER REPRESENTATIVE: _____ Print: D. DEGROOT

AUTHORIZED INSPECTOR: N/A Print: N/A

COMMENTS:

- THIS SPOOL WAS ORIGINALLY TESTED 16 SEP. 2013 BUT REWORKED PER REV 1 AND RETESTED HERE.

5Blue
Process Equipment Inc.

Hydrotest: Job # 5B1108-80
Date: 28-Oct-13
Client: Devon
Dwg #s : 5B1108-02-DR-80-007-2 Rev 1
Items: Spools (x 1)

Comments: The following spool were tested in this loop:
7C

Test Paramenters
Test Pressure: 428 PSI
Duration: 1 hour (minimum)
Medium: Water

Note: This spool was originally tested earlier on 16 Sep 13 but reworked per Rev 1 of the drawing

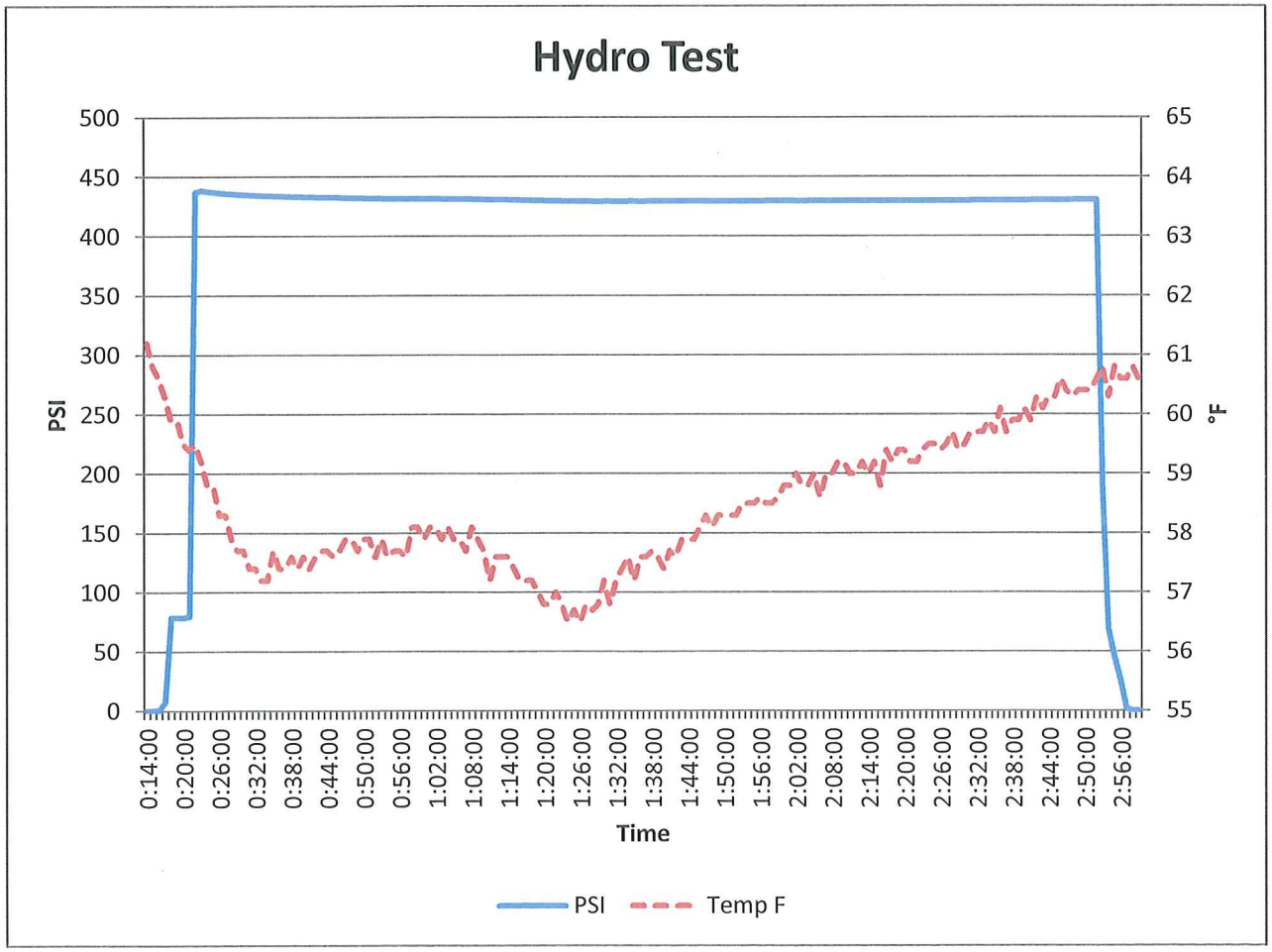

5Blue Job #: 5B1108-80 (1 x spool)
Gauge: WIKA, CPG1000, 2220063, 4.04
Log Type: CONTINUOUS
Sample Type: INTERVAL END
Interval: 1 minute
Unit: PSI
Custom Factor: 1.000 / psi
Trip Setpoint: 0.0 PSI
Trip Reset: 0.0 PSI
Initial Zero: -0.3 PSI
Initial Tare: 0.0 PSI

			Min Temp	56.5
			Max Temp	61.2
	Time	PSI		°F
Pressure	0:14:00	0	Temperature	61.2
Pressure	0:15:00	0.2	Temperature	60.8
Pressure	0:16:00	0.8	Temperature	60.6
Pressure	0:17:00	7.4	Temperature	60.3
Pressure	0:18:00	78.6	Temperature	59.9
Pressure	0:19:00	79	Temperature	59.9
Pressure	0:20:00	78.8	Temperature	59.5
Pressure	0:21:00	79.8	Temperature	59.4
Pressure	0:22:00	436.8	Temperature	59.5
Pressure	0:23:00	438.6	Temperature	59.2
Pressure	0:24:00	437.8	Temperature	58.8
Pressure	0:25:00	437.2	Temperature	58.8
Pressure	0:26:00	436.7	Temperature	58.3
Pressure	0:27:00	436.2	Temperature	58.3
Pressure	0:28:00	435.8	Temperature	57.9
Pressure	0:29:00	435.4	Temperature	57.7
Pressure	0:30:00	435.1	Temperature	57.7
Pressure	0:31:00	434.8	Temperature	57.4
Pressure	0:32:00	434.4	Temperature	57.4
Pressure	0:33:00	434.2	Temperature	57.2
Pressure	0:34:00	434.1	Temperature	57.2
Pressure	0:35:00	433.9	Temperature	57.7
Pressure	0:36:00	433.7	Temperature	57.4
Pressure	0:37:00	433.6	Temperature	57.4
Pressure	0:38:00	433.4	Temperature	57.6
Pressure	0:39:00	433.3	Temperature	57.4
Pressure	0:40:00	433.1	Temperature	57.6
Pressure	0:41:00	433	Temperature	57.4
Pressure	0:42:00	432.9	Temperature	57.6
Pressure	0:43:00	432.7	Temperature	57.7
Pressure	0:44:00	432.7	Temperature	57.7
Pressure	0:45:00	432.6	Temperature	57.6
Pressure	0:46:00	432.6	Temperature	57.7
Pressure	0:47:00	432.5	Temperature	57.9

	Time	PSI		°F
Pressure	0:48:00	432.2	Temperature	57.9
Pressure	0:49:00	432.1	Temperature	57.7
Pressure	0:50:00	432	Temperature	57.9
Pressure	0:51:00	431.9	Temperature	57.9
Pressure	0:52:00	431.9	Temperature	57.6
Pressure	0:53:00	431.9	Temperature	57.9
Pressure	0:54:00	431.7	Temperature	57.6
Pressure	0:55:00	431.8	Temperature	57.7
Pressure	0:56:00	431.6	Temperature	57.7
Pressure	0:57:00	431.6	Temperature	57.6
Pressure	0:58:00	431.6	Temperature	58.1
Pressure	0:59:00	431.6	Temperature	58.1
Pressure	1:00:00	431.6	Temperature	57.9
Pressure	1:01:00	431.7	Temperature	58.1
Pressure	1:02:00	431.5	Temperature	58.1
Pressure	1:03:00	431.5	Temperature	57.9
Pressure	1:04:00	431.4	Temperature	58.1
Pressure	1:05:00	431.4	Temperature	57.9
Pressure	1:06:00	431.3	Temperature	57.9
Pressure	1:07:00	431.2	Temperature	57.7
Pressure	1:08:00	431.2	Temperature	58.1
Pressure	1:09:00	431.1	Temperature	57.9
Pressure	1:10:00	431.1	Temperature	57.7
Pressure	1:11:00	430.9	Temperature	57.2
Pressure	1:12:00	430.8	Temperature	57.6
Pressure	1:13:00	430.8	Temperature	57.6
Pressure	1:14:00	430.7	Temperature	57.6
Pressure	1:15:00	430.6	Temperature	57.4
Pressure	1:16:00	430.5	Temperature	57.2
Pressure	1:17:00	430.3	Temperature	57.2
Pressure	1:18:00	430.2	Temperature	57.2
Pressure	1:19:00	430	Temperature	57
Pressure	1:20:00	430	Temperature	56.8
Pressure	1:21:00	429.8	Temperature	56.8
Pressure	1:22:00	429.8	Temperature	57
Pressure	1:23:00	429.6	Temperature	56.8
Pressure	1:24:00	429.5	Temperature	56.5
Pressure	1:25:00	429.4	Temperature	56.7
Pressure	1:26:00	429.4	Temperature	56.5
Pressure	1:27:00	429.4	Temperature	56.8
Pressure	1:28:00	429.3	Temperature	56.7
Pressure	1:29:00	429.2	Temperature	56.8
Pressure	1:30:00	429.3	Temperature	57.2
Pressure	1:31:00	429.3	Temperature	56.8
Pressure	1:32:00	429.2	Temperature	57.2
Pressure	1:33:00	429.2	Temperature	57.4

	Time	PSI		°F
Pressure	1:34:00	429.3	Temperature	57.6
Pressure	1:35:00	429.3	Temperature	57.2
Pressure	1:36:00	429.2	Temperature	57.6
Pressure	1:37:00	429.3	Temperature	57.6
Pressure	1:38:00	429.3	Temperature	57.7
Pressure	1:39:00	429.3	Temperature	57.6
Pressure	1:40:00	429.4	Temperature	57.4
Pressure	1:41:00	429.3	Temperature	57.7
Pressure	1:42:00	429.3	Temperature	57.6
Pressure	1:43:00	429.3	Temperature	57.9
Pressure	1:44:00	429.4	Temperature	57.9
Pressure	1:45:00	429.4	Temperature	57.9
Pressure	1:46:00	429.4	Temperature	58.1
Pressure	1:47:00	429.5	Temperature	58.3
Pressure	1:48:00	429.5	Temperature	58.1
Pressure	1:49:00	429.4	Temperature	58.3
Pressure	1:50:00	429.5	Temperature	58.3
Pressure	1:51:00	429.5	Temperature	58.3
Pressure	1:52:00	429.4	Temperature	58.3
Pressure	1:53:00	429.5	Temperature	58.5
Pressure	1:54:00	429.5	Temperature	58.5
Pressure	1:55:00	429.6	Temperature	58.5
Pressure	1:56:00	429.5	Temperature	58.6
Pressure	1:57:00	429.7	Temperature	58.5
Pressure	1:58:00	429.6	Temperature	58.5
Pressure	1:59:00	429.6	Temperature	58.6
Pressure	2:00:00	429.7	Temperature	58.8
Pressure	2:01:00	429.8	Temperature	58.8
Pressure	2:02:00	429.7	Temperature	59
Pressure	2:03:00	429.5	Temperature	58.8
Pressure	2:04:00	429.6	Temperature	58.8
Pressure	2:05:00	429.6	Temperature	59
Pressure	2:06:00	429.6	Temperature	58.6
Pressure	2:07:00	429.6	Temperature	59
Pressure	2:08:00	429.6	Temperature	59
Pressure	2:09:00	429.6	Temperature	59.2
Pressure	2:10:00	429.7	Temperature	59.2
Pressure	2:11:00	429.6	Temperature	59
Pressure	2:12:00	429.6	Temperature	59
Pressure	2:13:00	429.7	Temperature	59.2
Pressure	2:14:00	429.6	Temperature	59
Pressure	2:15:00	429.7	Temperature	59.2
Pressure	2:16:00	429.6	Temperature	58.8
Pressure	2:17:00	429.6	Temperature	59.4
Pressure	2:18:00	429.7	Temperature	59.2
Pressure	2:19:00	429.7	Temperature	59.4

	Time	PSI		°F
Pressure	2:20:00	429.7	Temperature	59.4
Pressure	2:21:00	429.7	Temperature	59.2
Pressure	2:22:00	429.7	Temperature	59.2
Pressure	2:23:00	429.8	Temperature	59.4
Pressure	2:24:00	429.8	Temperature	59.5
Pressure	2:25:00	429.8	Temperature	59.5
Pressure	2:26:00	429.8	Temperature	59.4
Pressure	2:27:00	429.8	Temperature	59.5
Pressure	2:28:00	429.8	Temperature	59.7
Pressure	2:29:00	429.9	Temperature	59.4
Pressure	2:30:00	429.8	Temperature	59.5
Pressure	2:31:00	429.9	Temperature	59.7
Pressure	2:32:00	429.9	Temperature	59.7
Pressure	2:33:00	429.9	Temperature	59.7
Pressure	2:34:00	429.9	Temperature	59.9
Pressure	2:35:00	430	Temperature	59.7
Pressure	2:36:00	430	Temperature	60.1
Pressure	2:37:00	430.1	Temperature	59.7
Pressure	2:38:00	430.1	Temperature	59.9
Pressure	2:39:00	430	Temperature	59.9
Pressure	2:40:00	430.1	Temperature	60.1
Pressure	2:41:00	430.2	Temperature	59.9
Pressure	2:42:00	430.3	Temperature	60.3
Pressure	2:43:00	430.2	Temperature	60.1
Pressure	2:44:00	430.3	Temperature	60.3
Pressure	2:45:00	430.3	Temperature	60.3
Pressure	2:46:00	430.3	Temperature	60.6
Pressure	2:47:00	430.3	Temperature	60.4
Pressure	2:48:00	430.4	Temperature	60.3
Pressure	2:49:00	430.4	Temperature	60.4
Pressure	2:50:00	430.4	Temperature	60.4
Pressure	2:51:00	430.5	Temperature	60.4
Pressure	2:52:00	430.5	Temperature	60.6
Pressure	2:53:00	188.6	Temperature	60.8
Pressure	2:54:00	69.1	Temperature	60.3
Pressure	2:55:00	45.6	Temperature	60.8
Pressure	2:56:00	25.9	Temperature	60.6
Pressure	2:57:00	1.7	Temperature	60.6
Pressure	2:58:00	0.1	Temperature	60.8
Pressure	2:59:00	0	Temperature	60.6

TARPON ENERGY SERVICES LTD.

ISO 9001: 2008 Certified

Certificate of Calibration

For Instrument :	WIKA CPG1000-BES-AIZZM3-Z
Customer Name :	5BLUE PROCESS EQUIPMENT
Description :	DIGTAL TEST GAUGE
Asset Number :	5B-DG-3K
Serial Number :	2220063
Certificate # :	9781-1

TARPON ENERGY SERVICES LTD. Certifies that...

the above described instrument met or exceeded all published (OEM) specifications at the time of calibration specified below; and has been calibrated using standards whose accuracies are traceable to the National Institute of Standards and Technology (NIST) and or National Research Council (NRC), or have been derived from accepted values or physical constants, or have been derived by ratio or self calibration techniques.

CALIBRATION INFORMATION

Cal Date Time	10-May-2013 10:58:56	Temperature	23.00°C	Work Order #	9781
Next Cal Due	10-May-2014	Humidity	40 %		
Pass	Y	Tech	Chuck Hwang		
Seals OK	Y	Note	N/A		
Cal Procedure	WIKA DIGITAL TEST GAUGE 3000PSI: (1 YEAR) CAL VER			Revision	1.0

STANDARDS USED FOR CALIBRATION

Asset Number	Serial No.	Mfg	Model	Description	Cal. Date	Due Date
N-12	351	DH INST.	7202-M	Deadweight Base	10/9/2012	10/9/2013
N-14	592	DH INST.	PC-7300-2	Piston Cylinder	10/11/2012	10/11/2013
N-16	544	DH INST.	PG7000	Mass Carrying Bell	10/9/2012	10/9/2013
N-17	2199	DH INST.	MS-7002-35	35 kg Mass Set	10/10/2012	10/10/2013

Calibration Technician

Quality Assurance Approval

Tarpon Energy Services Ltd., 1409 6Street, Nisku, AB.
T9E7M7,

TARPON ENERGY SERVICES LTD.

ISO 9001: 2008 Certified

Calibration Results

For Instrument : WIKA CPG1000-BES-AIZZM3-Z
DIGTAL TEST GAUGE
Serial No: 2220063
Asset No. 5B-DG-3K
Cal. Date : 10-May-2013
Cal. Due Date : 10-May-2014
Customer : 5BLUE PROCESS EQUIPMENT

Notes: N/A

Result: PASS
Performed on: 5/10/2013 at 10:58:56
Performed by: Chuck Hwang
Environment: Temp. 23.0°C Humid. 40 %
Condition F/L.: FOUND-LEFT
Certificate # : 9781-1
Work Order # : 9781

Standards Used

Asset Number	Serial No.	Mfg	Model	Description	Cal. Date	Due Date
N-12	351	DH INST.	7202-M	Deadweight Base	10/9/2012	10/9/2013
N-14	592	DH INST.	PC-7300-2	Piston Cylinder	10/11/2012	10/11/2013
N-16	544	DH INST.	PG7000	Mass Carrying Bell	10/9/2012	10/9/2013
N-17	2199	DH INST.	MS-7002-35	35 kg Mass Set	10/10/2012	10/10/2013

Test Results

Test Description	True Value	Test Result	Lower limit	Upper limit	% Tol	P / F
PRESSURE TESTS						
TEST POINT 0.0 psi		0.0	-1.5	1.5	0	P
TEST POINT 750.0 psi		749.6	748.5	751.5	26.7	P
TEST POINT 1500.0 psi		1499.6	1498.5	1501.5	26.7	P
TEST POINT 2250.0 psi		2249.5	2248.5	2251.5	33.3	P
TEST POINT 3000.0 psi		2999.3	2998.5	3001.5	46.7	P

End of Test Data

- If AS FOUND/AS LEFT is not listed separately, this means that no adjustment has been made and AS FOUND = AS LEFT.
- ERROR % TOL field contains the error as a percentage of the tolerance, and gives a quick impression of how close the instrument is to the allowed tolerance
If there are any questions about tolerances, or the certificate please call (780)466-6000.

TARPON
ENERGY SERVICES LTD.

CALIBRATION REPORT

PREPARED FOR 5 BLUE PROCESS EQUIPMENT INC.

INSTRUMENT INFORMATION

MANUFACTURER: **CPW**	MODEL NUMBER: **4" FACE ½ " NPT**
SERIAL NUMBER: **5B-B2**	WORK TICKET: **8957**
TYPE: **PRESSURE GAUGE**	RANGE: **0-1000 PSI**
CALIBRATION DATE: **17-Jan-2013**	CALIBRATION DUE DATE: **17-Jan-2014**

CALIBRATION DATA

TEST POINT	AS FOUND	AS LEFT
0%	50	0
20%	250	200
50%	550	500
80%	850	800
100%	+	1000

TEST EQUIPMENT USED

SERIAL NO.	MAKE	MODEL NO.	CALIBRATION DATE
TE-SHOP2	CRSYTAL	XP2I	23-July-2012

COMMENTS: The instrument was calibrated against laboratory standards that are either traceable to the National Institute of Standards and Technology, (NIST), National Research Council, (NRC), or are derived by approved ratio techniques.

CALIBRATION TECHNICIAN: **Angelito Lico**

5Blue
Process Equipment Inc.

JOB NUMBER: SB1108-80

TEST DATE: 23 OCT, 2013

DESCRIPTION: PIPE SPOOLS (x2)

HYDROTEST PROCEDURE / REPORT

DESIGN PRESSURE: 285 PSI

TEST PRESSURE: 428 PSI

DESIGN TEMPERATURE: 100°F

TEST TEMPERATURE: (SEE CHART)

MINIMUM HOLD TIME: 1 HOUR

RECORDER REQUIRED: ☑ YES ☐ NO

START TIME: 1000 HRS

END TIME: 1230 HRS

PREPARED BY: MICHALKOW / BATES

ADDITIONAL INFORMATION:

Test medium used: Water

Drawing No: SB1108-02-DR-80-XXX

Gauge #1: 5B-DG-3K

Gauge #2: 5B-B1

Chart Recorder #: 5B-DG-3K

TEST RESULTS:

- Acceptable; no leaks detected.

ACCEPTANCE

QUALITY CONTROL INSPECTOR: _____ Print: ANDREW NGO

CUSTOMER REPRESENTATIVE: _____ Print: DAN DE GROOT

AUTHORIZED INSPECTOR: N/A Print: N/A

COMMENTS:

THE FOLLOWING SPOOLS WERE INCLUDED FOR THIS TEST:

a) 6A

b) 6B

5Blue
Process Equipment Inc.

Hydrotest: Job # 5B1108-80
Date: 23-Oct-13
Client: Devon
Dwg #s : 5B1108-08-DR-80-xxx
Items: Spools (x 2)

Test Paramenters
Test Pressure: 428 PSI
Duration: 1 hour (minimum)
Medium: Water

Comments: The following spools were included in this test:
6A
6B

Note: This test was conducted in conjunction with:
a) 3 reworked spools for Job # 1093-80 and
b) 17 spools for Job # 1107-80

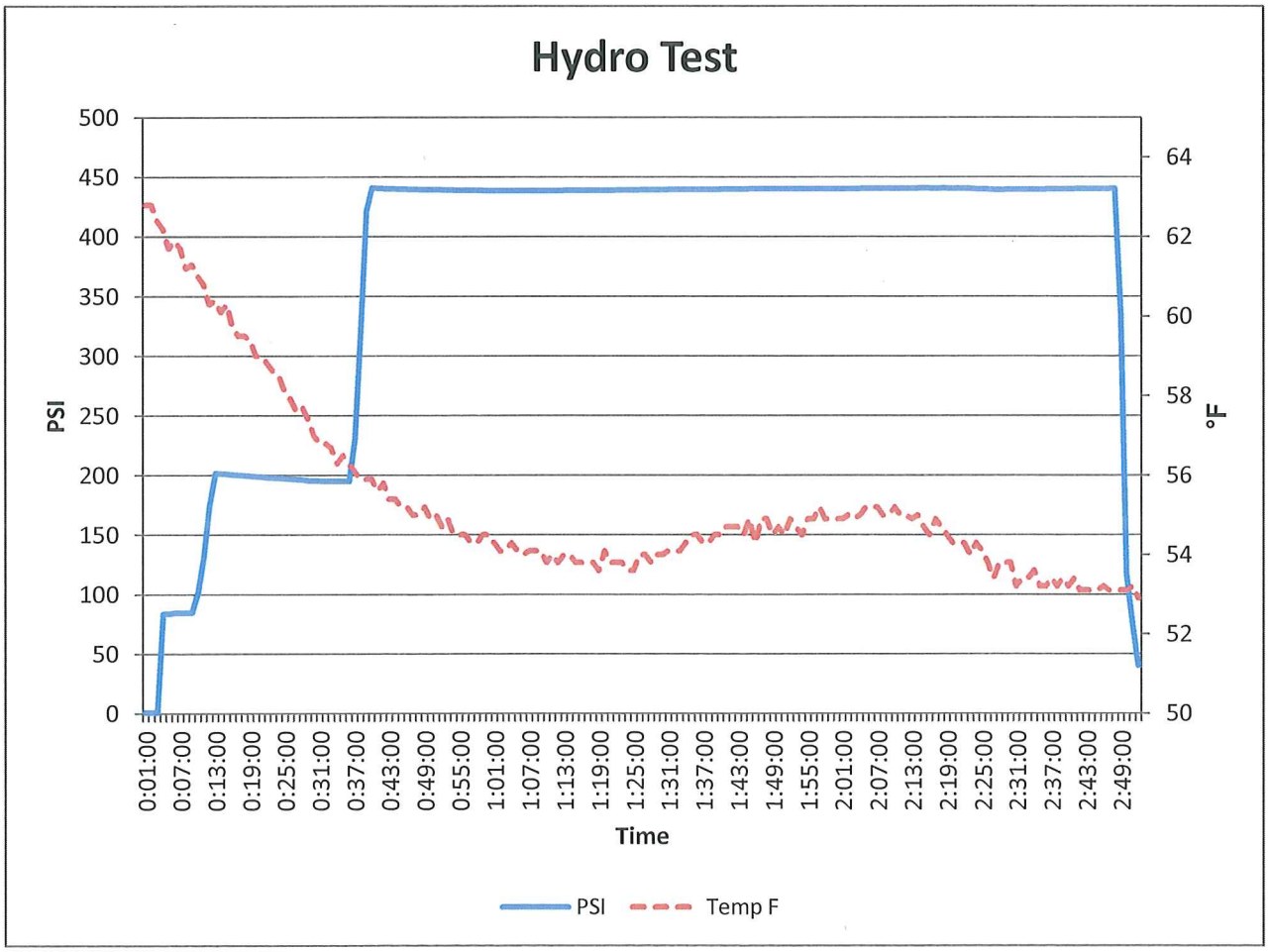

5Blue Job #: 5B1108-80 (2 spools)
Gauge: WIKA, CPG1000, 2220063, 4.04
Log Type: CONTINUOUS
Sample Type: INTERVAL END
Interval: 1 minute
Unit: PSI
Custom Factor: 1.000 / psi
Trip Setpoint: 0.0 PSI
Trip Reset: 0.0 PSI
Initial Zero: -0.9 PSI
Initial Tare: 0.0 PSI

			Min Temp	52.9
			Max Temp	62.8
	Time	PSI		°F
Pressure	0:01:00	0.9	Temperature	62.8
Pressure	0:02:00	0.8	Temperature	62.8
Pressure	0:03:00	0.8	Temperature	62.4
Pressure	0:04:00	83.6	Temperature	62.2
Pressure	0:05:00	83.6	Temperature	61.7
Pressure	0:06:00	84.5	Temperature	61.9
Pressure	0:07:00	84.5	Temperature	61.7
Pressure	0:08:00	84.5	Temperature	61.2
Pressure	0:09:00	84.6	Temperature	61.3
Pressure	0:10:00	101.9	Temperature	61
Pressure	0:11:00	131.8	Temperature	60.8
Pressure	0:12:00	174.8	Temperature	60.3
Pressure	0:13:00	201.9	Temperature	60.4
Pressure	0:14:00	201.5	Temperature	60.1
Pressure	0:15:00	201.1	Temperature	60.3
Pressure	0:16:00	200.7	Temperature	59.7
Pressure	0:17:00	200.3	Temperature	59.5
Pressure	0:18:00	199.8	Temperature	59.5
Pressure	0:19:00	199.5	Temperature	59.4
Pressure	0:20:00	199	Temperature	59
Pressure	0:21:00	198.8	Temperature	59
Pressure	0:22:00	198.3	Temperature	58.8
Pressure	0:23:00	197.9	Temperature	58.6
Pressure	0:24:00	197.6	Temperature	58.5
Pressure	0:25:00	197.3	Temperature	58.1
Pressure	0:26:00	196.9	Temperature	57.9
Pressure	0:27:00	196.6	Temperature	57.6
Pressure	0:28:00	196.3	Temperature	57.7
Pressure	0:29:00	195.5	Temperature	57.4
Pressure	0:30:00	195.3	Temperature	57
Pressure	0:31:00	195.3	Temperature	56.8
Pressure	0:32:00	195.1	Temperature	56.8
Pressure	0:33:00	195.1	Temperature	56.7
Pressure	0:34:00	195.1	Temperature	56.3

	Time	PSI		°F
Pressure	0:35:00	195	Temperature	56.5
Pressure	0:36:00	194.9	Temperature	56.3
Pressure	0:37:00	230.2	Temperature	56.1
Pressure	0:38:00	318.7	Temperature	55.9
Pressure	0:39:00	421.3	Temperature	55.9
Pressure	0:40:00	440.9	Temperature	55.9
Pressure	0:41:00	440.6	Temperature	55.6
Pressure	0:42:00	440.3	Temperature	55.8
Pressure	0:43:00	440.2	Temperature	55.4
Pressure	0:44:00	440	Temperature	55.4
Pressure	0:45:00	439.9	Temperature	55.2
Pressure	0:46:00	439.8	Temperature	55.2
Pressure	0:47:00	439.6	Temperature	55
Pressure	0:48:00	439.5	Temperature	55
Pressure	0:49:00	439.4	Temperature	55.2
Pressure	0:50:00	439.3	Temperature	54.9
Pressure	0:51:00	439.2	Temperature	55
Pressure	0:52:00	439.2	Temperature	54.7
Pressure	0:53:00	439.1	Temperature	54.9
Pressure	0:54:00	439	Temperature	54.5
Pressure	0:55:00	438.9	Temperature	54.5
Pressure	0:56:00	438.8	Temperature	54.5
Pressure	0:57:00	438.7	Temperature	54.3
Pressure	0:58:00	438.7	Temperature	54.3
Pressure	0:59:00	438.7	Temperature	54.5
Pressure	1:00:00	438.6	Temperature	54.5
Pressure	1:01:00	438.5	Temperature	54.3
Pressure	1:02:00	438.6	Temperature	54.1
Pressure	1:03:00	438.5	Temperature	54.1
Pressure	1:04:00	438.5	Temperature	54.3
Pressure	1:05:00	438.6	Temperature	54.1
Pressure	1:06:00	438.6	Temperature	54
Pressure	1:07:00	438.6	Temperature	54.1
Pressure	1:08:00	438.6	Temperature	54.1
Pressure	1:09:00	438.6	Temperature	54.1
Pressure	1:10:00	438.6	Temperature	53.8
Pressure	1:11:00	438.6	Temperature	54
Pressure	1:12:00	438.6	Temperature	53.8
Pressure	1:13:00	438.8	Temperature	54
Pressure	1:14:00	438.8	Temperature	54
Pressure	1:15:00	438.8	Temperature	53.8
Pressure	1:16:00	438.8	Temperature	53.8
Pressure	1:17:00	438.9	Temperature	53.8
Pressure	1:18:00	438.9	Temperature	53.8
Pressure	1:19:00	438.8	Temperature	53.6
Pressure	1:20:00	438.9	Temperature	54.1

	Time	PSI		°F
Pressure	1:21:00	438.9	Temperature	53.8
Pressure	1:22:00	439	Temperature	53.8
Pressure	1:23:00	439	Temperature	53.8
Pressure	1:24:00	439.1	Temperature	53.6
Pressure	1:25:00	439.1	Temperature	53.6
Pressure	1:26:00	439.2	Temperature	54
Pressure	1:27:00	439.2	Temperature	54
Pressure	1:28:00	439.2	Temperature	53.8
Pressure	1:29:00	439.3	Temperature	54
Pressure	1:30:00	439.3	Temperature	54
Pressure	1:31:00	439.5	Temperature	54.1
Pressure	1:32:00	439.5	Temperature	54.1
Pressure	1:33:00	439.6	Temperature	54.1
Pressure	1:34:00	439.6	Temperature	54.3
Pressure	1:35:00	439.8	Temperature	54.5
Pressure	1:36:00	439.5	Temperature	54.5
Pressure	1:37:00	439.6	Temperature	54.3
Pressure	1:38:00	439.6	Temperature	54.3
Pressure	1:39:00	439.7	Temperature	54.5
Pressure	1:40:00	439.8	Temperature	54.5
Pressure	1:41:00	439.9	Temperature	54.7
Pressure	1:42:00	439.9	Temperature	54.7
Pressure	1:43:00	440	Temperature	54.7
Pressure	1:44:00	439.9	Temperature	54.5
Pressure	1:45:00	440	Temperature	54.9
Pressure	1:46:00	440.1	Temperature	54.3
Pressure	1:47:00	440.1	Temperature	54.9
Pressure	1:48:00	440.1	Temperature	54.9
Pressure	1:49:00	440.1	Temperature	54.5
Pressure	1:50:00	440.1	Temperature	54.7
Pressure	1:51:00	440.1	Temperature	54.5
Pressure	1:52:00	440.1	Temperature	54.9
Pressure	1:53:00	440.1	Temperature	54.7
Pressure	1:54:00	440.1	Temperature	54.5
Pressure	1:55:00	440.2	Temperature	54.9
Pressure	1:56:00	440.1	Temperature	54.9
Pressure	1:57:00	440.2	Temperature	55.2
Pressure	1:58:00	440.2	Temperature	54.9
Pressure	1:59:00	440.2	Temperature	54.9
Pressure	2:00:00	440.2	Temperature	54.9
Pressure	2:01:00	440.2	Temperature	54.9
Pressure	2:02:00	440.3	Temperature	55
Pressure	2:03:00	440.2	Temperature	54.9
Pressure	2:04:00	440.3	Temperature	55
Pressure	2:05:00	440.4	Temperature	55.2
Pressure	2:06:00	440.3	Temperature	55.2

	Time	PSI		°F
Pressure	2:07:00	440.3	Temperature	55.2
Pressure	2:08:00	440.3	Temperature	55
Pressure	2:09:00	440.3	Temperature	55
Pressure	2:10:00	440.4	Temperature	55.2
Pressure	2:11:00	440.5	Temperature	55
Pressure	2:12:00	440.4	Temperature	55
Pressure	2:13:00	440.4	Temperature	54.9
Pressure	2:14:00	440.5	Temperature	55
Pressure	2:15:00	440.5	Temperature	54.7
Pressure	2:16:00	440.5	Temperature	54.5
Pressure	2:17:00	440.4	Temperature	54.9
Pressure	2:18:00	440.5	Temperature	54.7
Pressure	2:19:00	440.5	Temperature	54.5
Pressure	2:20:00	440.4	Temperature	54.3
Pressure	2:21:00	440.4	Temperature	54.3
Pressure	2:22:00	440.4	Temperature	54.3
Pressure	2:23:00	440.3	Temperature	54
Pressure	2:24:00	440.1	Temperature	54.3
Pressure	2:25:00	439.9	Temperature	54.1
Pressure	2:26:00	439.8	Temperature	53.8
Pressure	2:27:00	439.5	Temperature	53.4
Pressure	2:28:00	439.4	Temperature	53.8
Pressure	2:29:00	439.5	Temperature	53.8
Pressure	2:30:00	439.6	Temperature	53.8
Pressure	2:31:00	439.5	Temperature	53.2
Pressure	2:32:00	439.7	Temperature	53.4
Pressure	2:33:00	439.6	Temperature	53.4
Pressure	2:34:00	439.7	Temperature	53.6
Pressure	2:35:00	439.7	Temperature	53.2
Pressure	2:36:00	439.8	Temperature	53.2
Pressure	2:37:00	439.8	Temperature	53.4
Pressure	2:38:00	439.8	Temperature	53.2
Pressure	2:39:00	439.9	Temperature	53.4
Pressure	2:40:00	439.9	Temperature	53.2
Pressure	2:41:00	440	Temperature	53.4
Pressure	2:42:00	440.1	Temperature	53.1
Pressure	2:43:00	440.1	Temperature	53.1
Pressure	2:44:00	440.2	Temperature	53.1
Pressure	2:45:00	440.2	Temperature	53.1
Pressure	2:46:00	440.2	Temperature	53.2
Pressure	2:47:00	440.3	Temperature	53.1
Pressure	2:48:00	440.4	Temperature	53.1
Pressure	2:49:00	336	Temperature	53.1
Pressure	2:50:00	117.1	Temperature	53.1
Pressure	2:51:00	74.9	Temperature	53.2
Pressure	2:52:00	40.2	Temperature	52.9

TARPON ENERGY SERVICES LTD.

ISO 9001: 2008 Certified

Certificate of Calibration

For Instrument :	WIKA CPG1000-BES-AIZZM3-Z
Customer Name :	5BLUE PROCESS EQUIPMENT
Description :	DIGTAL TEST GAUGE
Asset Number :	5B-DG-3K
Serial Number :	2220063
Certificate # :	9781-1

TARPON ENERGY SERVICES LTD. Certifies that...

the above described instrument met or exceeded all published (OEM) specifications at the time of calibration specified below; and has been calibrated using standards whose accuracies are traceable to the National Institute of Standards and Technology (NIST) and or National Research Council (NRC), or have been derived from accepted values or physical constants, or have been derived by ratio or self calibration techniques.

CALIBRATION INFORMATION

Cal Date Time	10-May-2013 10:58:56	Temperature	23.00°C	Work Order #	9781
Next Cal Due	10-May-2014	Humidity	40 %		
Pass	Y	Tech	Chuck Hwang		
Seals OK	Y	Note	N/A		
Cal Procedure	WIKA DIGITAL TEST GAUGE 3000PSI: (1 YEAR) CAL VER			Revision	1.0

STANDARDS USED FOR CALIBRATION

Asset Number	Serial No.	Mfg	Model	Description	Cal. Date	Due Date
N-12	351	DH INST.	7202-M	Deadweight Base	10/9/2012	10/9/2013
N-14	592	DH INST.	PC-7300-2	Piston Cylinder	10/11/2012	10/11/2013
N-16	544	DH INST.	PG7000	Mass Carrying Bell	10/9/2012	10/9/2013
N-17	2199	DH INST.	MS-7002-35	35 kg Mass Set	10/10/2012	10/10/2013

Calibration Technician

Quality Assurance Approval

TARPON ENERGY SERVICES LTD.

ISO 9001: 2008 Certified

Calibration Results

For Instrument : WIKA CPG1000-BES-AIZZM3-Z
DIGTAL TEST GAUGE
Serial No: 2220063
Asset No. 5B-DG-3K
Cal. Date : 10-May-2013
Cal. Due Date : 10-May-2014
Customer : 5BLUE PROCESS EQUIPMENT

Result: PASS
Performed on: 5/10/2013 at 10:58:56
Performed by: Chuck Hwang
Environment: Temp. 23.0°C Humid. 40 %
Condition F/L: FOUND-LEFT
Certificate # : 9781-1
Work Order # : 9781

Notes: N/A

Standards Used

Asset Number	Serial No.	Mfg	Model	Description	Cal. Date	Due Date
N-12	351	DH INST.	7202-M	Deadweight Base	10/9/2012	10/9/2013
N-14	592	DH INST.	PC-7300-2	Piston Cylinder	10/11/2012	10/11/2013
N-16	544	DH INST.	PG7000	Mass Carrying Bell	10/9/2012	10/9/2013
N-17	2199	DH INST.	MS-7002-35	35 kg Mass Set	10/10/2012	10/10/2013

Test Results

Test Description	True Value	Test Result	Lower limit	Upper limit	% Tol	P / F
PRESSURE TESTS						
TEST POINT 0.0 psi		0.0	-1.5	1.5	0	P
TEST POINT 750.0 psi		749.6	748.5	751.5	26.7	P
TEST POINT 1500.0 psi		1499.6	1498.5	1501.5	26.7	P
TEST POINT 2250.0 psi		2249.5	2248.5	2251.5	33.3	P
TEST POINT 3000.0 psi		2999.3	2998.5	3001.5	46.7	P

End of Test Data

If AS FOUND/AS LEFT is not listed separately, this means that no adjustment has been made and AS FOUND = AS LEFT.
ERROR % TOL field contains the error as a percentage of the tolerance, and gives a quick impression of how close the instrument is to the allowed tolerance
If there are any questions about tolerances, or the certificate please call (780)466-6000.

TARPON
ENERGY SERVICES LTD.

CALIBRATION REPORT

PREPARED FOR 5 BLUE PROCESS EQUIPMENT INC.	
NOT CALIBRATABLE	
MANUFACTURER: **WIKA**	MODEL NUMBER: **4" FACE ½ " NPT**
SERIAL NUMBER: **5B-B1**	WORK TICKET: **11507**
TYPE: **PRESSURE GAUGE**	RANGE: **0-1000 PSI**
CALIBRATION DATE: **10-Sept-2013**	CALIBRATION DUE DATE: **10-Sept-2014**

CALIBRATION DATA

TEST POINT	AS FOUND	AS LEFT
0%	0	0
20%	200	200
50%	500	500
80%	800	800
100%	1000	1000

TEST EQUIPMENT USED

SERIAL NO.	MAKE	MODEL NO.	CALIBRATION DATE
TE-212	CRSYTAL	XP2I	8-May-2013

COMMENTS: The instrument was calibrated against laboratory standards that are either traceable to the National Institute of Standards and Technology, (NIST), National Research Council, (NRC), or are derived by approved ratio techniques.

CALIBRATION TECHNICIAN: **Chris Kutz**

5Blue
Process Equipment Inc.

JOB NUMBER: 1108-80

TEST DATE: 17 oct 2013

DESCRIPTION: process piping.

HYDROTEST PROCEDURE / REPORT

DESIGN PRESSURE: 285 PSI

TEST PRESSURE: 428 PSI

DESIGN TEMPERATURE: -50/100F

TEST TEMPERATURE: 16°C / SHOP

MINIMUM HOLD TIME: 1 hour

RECORDER REQUIRED: ☑ YES ☐ NO

START TIME: 7AM

END TIME: 9AM

PREPARED BY: Riddell, Cwilka

ADDITIONAL INFORMATION:

Test medium used: Water

Drawing No: SB1108-02-OR-80

Gauge #1: SB-B4

Gauge #2: SB-DG-3K

Chart Recorder #: SB-DG-3K

TEST RESULTS:

- Acceptable; no leaks detected.

ACCEPTANCE

QUALITY CONTROL INSPECTOR: _____ Print: Joelle Deen-Brahm

CUSTOMER REPRESENTATIVE: _____ Print: Dan De Groot

AUTHORIZED INSPECTOR: / Print: /

COMMENTS:

1-A, 1-B, 6A, 5A, 5B

5Blue
Process Equipment Inc.

Hydrotest: Job # 5B1108-80
Date: 17-Oct-13
Client: Encana
Dwg #s : 5B1108-08-DR-80-xxx
Items: Spools (x 5)

Test Paramenters
Test Pressure: 428 PSI
Duration: 1 hour (minimum)
Medium: Water

Comments: The following spools were included in this test:
1A
1B
5A
5B
6A

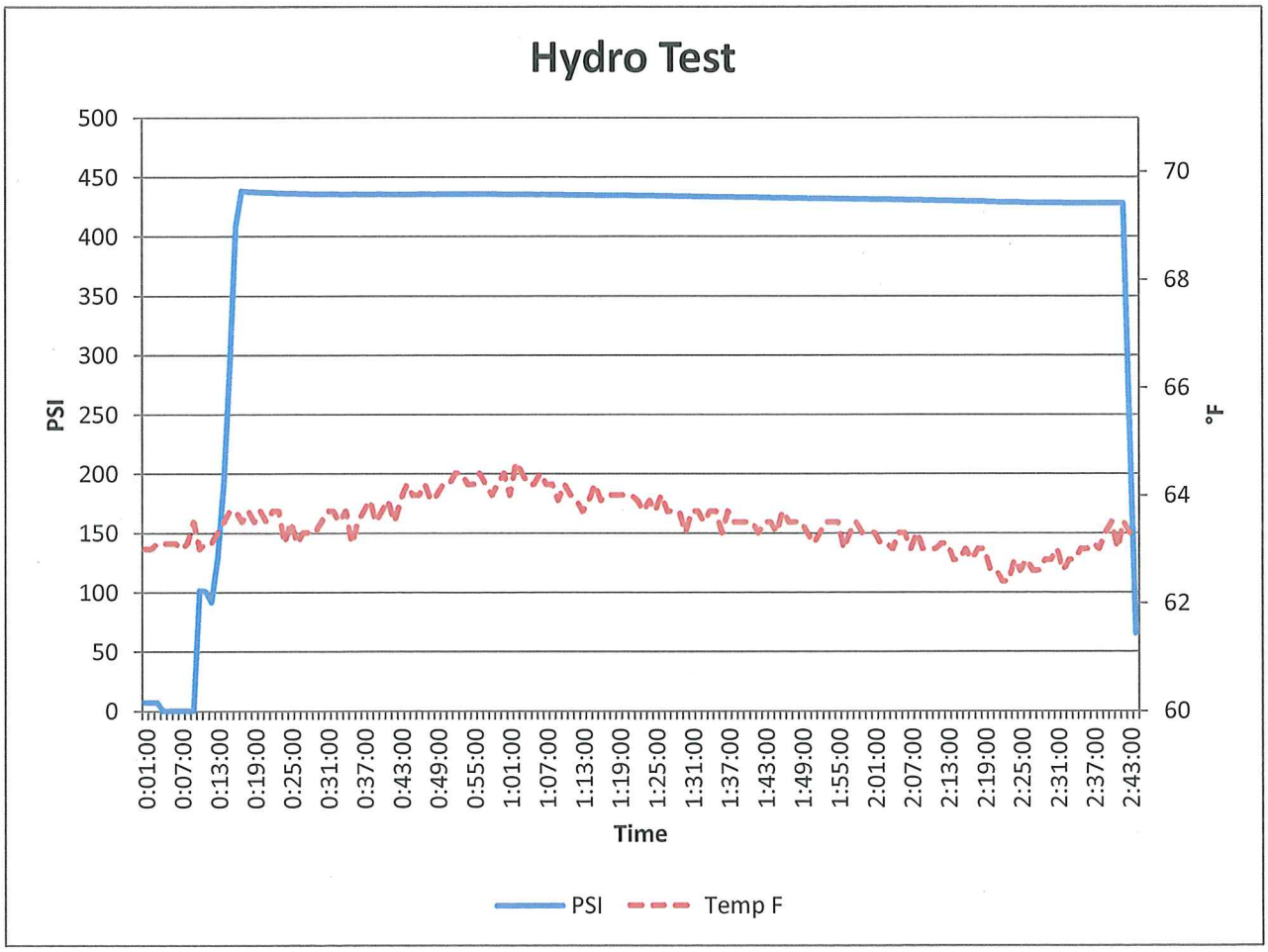

5Blue Job #: 5B1108-80 (5 x spools)
Gauge: WIKA, CPG1000, 2220063, 4.04
Log Type: CONTINUOUS
Sample Type: INTERVAL END
Interval: 1 minute
Unit: PSI
Custom Factor: 1.000 / psi
Trip Setpoint: 1.0 PSI
Trip Reset: 0.0 PSI
Initial Zero: -0.9 PSI
Initial Tare: 0.0 PSI

			Min Temp	62.4
			Max Temp	64.6

	Time	PSI		°F
Pressure	0:01:00	7.5	Temperature	63
Pressure	0:02:00	7.5	Temperature	63
Pressure	0:03:00	7.4	Temperature	63.1
Pressure	0:04:00	0.4	Temperature	63.1
Pressure	0:05:00	0.3	Temperature	63.1
Pressure	0:06:00	0.5	Temperature	63.1
Pressure	0:07:00	0.4	Temperature	63
Pressure	0:08:00	0.5	Temperature	63.1
Pressure	0:09:00	0.5	Temperature	63.5
Pressure	0:10:00	101.5	Temperature	63
Pressure	0:11:00	100.8	Temperature	63.1
Pressure	0:12:00	91.8	Temperature	63.1
Pressure	0:13:00	129.6	Temperature	63.3
Pressure	0:14:00	191.4	Temperature	63.5
Pressure	0:15:00	289.9	Temperature	63.7
Pressure	0:16:00	407.7	Temperature	63.7
Pressure	0:17:00	438.3	Temperature	63.5
Pressure	0:18:00	437.8	Temperature	63.7
Pressure	0:19:00	437.5	Temperature	63.5
Pressure	0:20:00	437.2	Temperature	63.7
Pressure	0:21:00	437	Temperature	63.5
Pressure	0:22:00	436.8	Temperature	63.7
Pressure	0:23:00	436.5	Temperature	63.7
Pressure	0:24:00	436.4	Temperature	63.1
Pressure	0:25:00	436.2	Temperature	63.5
Pressure	0:26:00	436	Temperature	63.1
Pressure	0:27:00	435.9	Temperature	63.3
Pressure	0:28:00	435.9	Temperature	63.3
Pressure	0:29:00	435.7	Temperature	63.3
Pressure	0:30:00	435.7	Temperature	63.5
Pressure	0:31:00	435.6	Temperature	63.7
Pressure	0:32:00	435.5	Temperature	63.7
Pressure	0:33:00	435.5	Temperature	63.5
Pressure	0:34:00	435.4	Temperature	63.7

	Time	PSI		°F
Pressure	0:35:00	435.4	Temperature	63.1
Pressure	0:36:00	435.5	Temperature	63.5
Pressure	0:37:00	435.4	Temperature	63.7
Pressure	0:38:00	435.4	Temperature	63.9
Pressure	0:39:00	435.4	Temperature	63.5
Pressure	0:40:00	435.5	Temperature	63.7
Pressure	0:41:00	435.4	Temperature	63.9
Pressure	0:42:00	435.4	Temperature	63.5
Pressure	0:43:00	435.4	Temperature	63.9
Pressure	0:44:00	435.4	Temperature	64.2
Pressure	0:45:00	435.4	Temperature	64
Pressure	0:46:00	435.4	Temperature	64
Pressure	0:47:00	435.5	Temperature	64.2
Pressure	0:48:00	435.5	Temperature	63.9
Pressure	0:49:00	435.4	Temperature	64
Pressure	0:50:00	435.5	Temperature	64.2
Pressure	0:51:00	435.5	Temperature	64.2
Pressure	0:52:00	435.5	Temperature	64.4
Pressure	0:53:00	435.6	Temperature	64.4
Pressure	0:54:00	435.6	Temperature	64.2
Pressure	0:55:00	435.5	Temperature	64.2
Pressure	0:56:00	435.5	Temperature	64.4
Pressure	0:57:00	435.5	Temperature	64.2
Pressure	0:58:00	435.5	Temperature	64
Pressure	0:59:00	435.5	Temperature	64.2
Pressure	1:00:00	435.4	Temperature	64.4
Pressure	1:01:00	435.4	Temperature	64
Pressure	1:02:00	435.3	Temperature	64.6
Pressure	1:03:00	435.4	Temperature	64.4
Pressure	1:04:00	435.4	Temperature	64.2
Pressure	1:05:00	435.3	Temperature	64.2
Pressure	1:06:00	435.1	Temperature	64.4
Pressure	1:07:00	435.2	Temperature	64.2
Pressure	1:08:00	435.1	Temperature	64.2
Pressure	1:09:00	435	Temperature	63.9
Pressure	1:10:00	435	Temperature	64.2
Pressure	1:11:00	434.9	Temperature	64
Pressure	1:12:00	434.8	Temperature	63.9
Pressure	1:13:00	434.7	Temperature	63.7
Pressure	1:14:00	434.7	Temperature	63.9
Pressure	1:15:00	434.7	Temperature	64.2
Pressure	1:16:00	434.6	Temperature	63.9
Pressure	1:17:00	434.5	Temperature	64
Pressure	1:18:00	434.5	Temperature	64
Pressure	1:19:00	434.4	Temperature	64
Pressure	1:20:00	434.4	Temperature	64

	Time	PSI		°F
Pressure	1:21:00	434.4	Temperature	64
Pressure	1:22:00	434.3	Temperature	63.9
Pressure	1:23:00	434.3	Temperature	63.7
Pressure	1:24:00	434.3	Temperature	63.9
Pressure	1:25:00	434.2	Temperature	63.7
Pressure	1:26:00	434	Temperature	64
Pressure	1:27:00	434	Temperature	63.7
Pressure	1:28:00	433.9	Temperature	63.7
Pressure	1:29:00	433.8	Temperature	63.7
Pressure	1:30:00	433.7	Temperature	63.3
Pressure	1:31:00	433.6	Temperature	63.7
Pressure	1:32:00	433.5	Temperature	63.7
Pressure	1:33:00	433.5	Temperature	63.5
Pressure	1:34:00	433.4	Temperature	63.7
Pressure	1:35:00	433.3	Temperature	63.7
Pressure	1:36:00	433.3	Temperature	63.3
Pressure	1:37:00	433.1	Temperature	63.7
Pressure	1:38:00	433.1	Temperature	63.5
Pressure	1:39:00	433	Temperature	63.5
Pressure	1:40:00	432.9	Temperature	63.5
Pressure	1:41:00	432.8	Temperature	63.5
Pressure	1:42:00	432.8	Temperature	63.3
Pressure	1:43:00	432.6	Temperature	63.5
Pressure	1:44:00	432.6	Temperature	63.5
Pressure	1:45:00	432.5	Temperature	63.3
Pressure	1:46:00	432.4	Temperature	63.7
Pressure	1:47:00	432.3	Temperature	63.5
Pressure	1:48:00	432.2	Temperature	63.5
Pressure	1:49:00	432.1	Temperature	63.5
Pressure	1:50:00	432	Temperature	63.3
Pressure	1:51:00	431.9	Temperature	63.1
Pressure	1:52:00	431.9	Temperature	63.3
Pressure	1:53:00	431.8	Temperature	63.5
Pressure	1:54:00	431.8	Temperature	63.5
Pressure	1:55:00	431.6	Temperature	63.5
Pressure	1:56:00	431.5	Temperature	63
Pressure	1:57:00	431.5	Temperature	63.3
Pressure	1:58:00	431.4	Temperature	63.5
Pressure	1:59:00	431.3	Temperature	63.3
Pressure	2:00:00	431.2	Temperature	63.3
Pressure	2:01:00	431.1	Temperature	63.3
Pressure	2:02:00	431.1	Temperature	63.1
Pressure	2:03:00	431	Temperature	63.1
Pressure	2:04:00	431	Temperature	63
Pressure	2:05:00	430.8	Temperature	63.3
Pressure	2:06:00	430.7	Temperature	63.3

	Time	PSI		°F
Pressure	2:07:00	430.6	Temperature	63
Pressure	2:08:00	430.5	Temperature	63.3
Pressure	2:09:00	430.4	Temperature	63
Pressure	2:10:00	430.3	Temperature	63
Pressure	2:11:00	430.2	Temperature	63
Pressure	2:12:00	430.1	Temperature	63.1
Pressure	2:13:00	430.1	Temperature	63.1
Pressure	2:14:00	429.9	Temperature	62.8
Pressure	2:15:00	429.7	Temperature	62.8
Pressure	2:16:00	429.7	Temperature	63
Pressure	2:17:00	429.5	Temperature	62.8
Pressure	2:18:00	429.4	Temperature	63
Pressure	2:19:00	429.3	Temperature	63
Pressure	2:20:00	429	Temperature	62.6
Pressure	2:21:00	428.9	Temperature	62.6
Pressure	2:22:00	428.7	Temperature	62.4
Pressure	2:23:00	428.7	Temperature	62.4
Pressure	2:24:00	428.6	Temperature	62.8
Pressure	2:25:00	428.5	Temperature	62.6
Pressure	2:26:00	428.3	Temperature	62.8
Pressure	2:27:00	428.2	Temperature	62.6
Pressure	2:28:00	428.2	Temperature	62.6
Pressure	2:29:00	428.1	Temperature	62.8
Pressure	2:30:00	428	Temperature	62.8
Pressure	2:31:00	428	Temperature	63
Pressure	2:32:00	428	Temperature	62.6
Pressure	2:33:00	427.9	Temperature	62.8
Pressure	2:34:00	427.9	Temperature	62.8
Pressure	2:35:00	427.9	Temperature	63
Pressure	2:36:00	427.9	Temperature	63
Pressure	2:37:00	427.9	Temperature	63.1
Pressure	2:38:00	427.8	Temperature	63
Pressure	2:39:00	427.8	Temperature	63.3
Pressure	2:40:00	427.9	Temperature	63.5
Pressure	2:41:00	427.9	Temperature	63
Pressure	2:42:00	427.9	Temperature	63.5
Pressure	2:43:00	245.3	Temperature	63.3
Pressure	2:44:00	65.2	Temperature	63.3

TARPON
ENERGY SERVICES LTD.

CALIBRATION REPORT

PREPARED FOR 5 BLUE

INSTRUMENT INFORMATION

MANUFACTURER: **WIKA**	MODEL NUMBER: **4½" FACE ½ " NPT**
SERIAL NUMBER: **5B-B4**	WORK TICKET: **2192**
TYPE: **PRESSURE GAUGE**	RANGE: **0-1000 PSI**
CALIBRATION DATE: **2-APRIL-2013**	CALIBRATION DUE DATE: **2-APRIL-2014**

CALIBRATION DATA

TEST POINT	AS FOUND	AS LEFT
0%	0	0
20%	200	200
50%	500	500
80%	800	800
100%	1000	1000

TEST EQUIPMENT USED

SERIAL NO.	MAKE	MODEL NO.	CALIBRATION DATE
TE-SHOP1	CRYSTAL	XP2I	11-FEB-2013

COMMENTS: The instrument was calibrated against laboratory standards that are either traceable to the National Institute of Standards and Technology, (NIST), National Research Council, (NRC), or are derived by approved ratio techniques.

CALIBRATION TECHNICIAN: **Brad Kaplan**

TARPON ENERGY SERVICES LTD.

ISO 9001: 2008 Certified

Certificate of Calibration

For Instrument :	WIKA CPG1000-BES-AIZZM3-Z
Customer Name :	5BLUE PROCESS EQUIPMENT
Description :	DIGTAL TEST GAUGE
Asset Number :	5B-DG-3K
Serial Number :	2220063
Certificate # :	9781-1

TARPON ENERGY SERVICES LTD. Certifies that...

the above described instrument met or exceeded all published (OEM) specifications at the time of calibration specified below; and has been calibrated using standards whose accuracies are traceable to the National Institute of Standards and Technology (NIST) and or National Research Council (NRC), or have been derived from accepted values or physical constants, or have been derived by ratio or self calibration techniques.

CALIBRATION INFORMATION

Cal Date Time	10-May-2013 10:58:56	Temperature	23.00°C	Work Order #	9781
Next Cal Due	10-May-2014	Humidity	40 %		
Pass	Y	Tech	Chuck Hwang		
Seals OK	Y	Note	N/A		
Cal Procedure	WIKA DIGITAL TEST GAUGE 3000PSI: (1 YEAR) CAL VER			Revision	1.0

STANDARDS USED FOR CALIBRATION

Asset Number	Serial No.	Mfg	Model	Description	Cal. Date	Due Date
N-12	351	DH INST.	7202-M	Deadweight Base	10/9/2012	10/9/2013
N-14	592	DH INST.	PC-7300-2	Piston Cylinder	10/11/2012	10/11/2013
N-16	544	DH INST.	PG7000	Mass Carrying Bell	10/9/2012	10/9/2013
N-17	2199	DH INST.	MS-7002-35	35 kg Mass Set	10/10/2012	10/10/2013

Calibration Technician

Quality Assurance Approval

Tarpon Energy Services Ltd., 1409 6Street, Nisku, AB.
T9E7M7,

TARPON ENERGY SERVICES LTD.

ISO 9001: 2008 Certified

Calibration Results

For Instrument : WIKA CPG1000-BES-AIZZM3-Z
DIGTAL TEST GAUGE
Serial No: 2220063
Asset No. 5B-DG-3K
Cal. Date : 10-May-2013
Cal. Due Date : 10-May-2014
Customer : 5BLUE PROCESS EQUIPMENT

Notes: N/A

Result: PASS
Performed on: 5/10/2013 at 10:58:56
Performed by: Chuck Hwang
Environment: Temp. 23.0°C Humid. 40 %
Condition F/L: FOUND-LEFT
Certificate # : 9781-1
Work Order # : 9781

Standards Used

Asset Number	Serial No.	Mfg	Model	Description	Cal. Date	Due Date
N-12	351	DH INST.	7202-M	Deadweight Base	10/9/2012	10/9/2013
N-14	592	DH INST.	PC-7300-2	Piston Cylinder	10/11/2012	10/11/2013
N-16	544	DH INST.	PG7000	Mass Carrying Bell	10/9/2012	10/9/2013
N-17	2199	DH INST.	MS-7002-35	35 kg Mass Set	10/10/2012	10/10/2013

Test Results

Test Description	True Value	Test Result	Lower limit	Upper limit	% Tol	P / F
PRESSURE TESTS						
TEST POINT 0.0 psi		0.0	-1.5	1.5	0	P
TEST POINT 750.0 psi		749.6	748.5	751.5	26.7	P
TEST POINT 1500.0 psi		1499.6	1498.5	1501.5	26.7	P
TEST POINT 2250.0 psi		2249.5	2248.5	2251.5	33.3	P
TEST POINT 3000.0 psi		2999.3	2998.5	3001.5	46.7	P

End of Test Data

- If FOUND/AS LEFT is not listed separately, this means that no adjustment has been made and AS FOUND = AS LEFT.
- The ERROR % TOL field contains the error as a percentage of the tolerance, and gives a quick impression of how close the instrument is to the allowed tolerance

If there are any questions about tolerances, or the certificate please call (780)466-6000.

5Blue
Process Equipment Inc.

JOB NUMBER: 1108-80

TEST DATE: 17 oct 2013

DESCRIPTION: Process piping

HYDROTEST PROCEDURE / REPORT

DESIGN PRESSURE: 740

TEST PRESSURE: 1110 PSI

DESIGN TEMPERATURE: 100°F

TEST TEMPERATURE: 16°C / SHOP

MINIMUM HOLD TIME: 1 hour

RECORDER REQUIRED: ☑ YES ☐ NO

START TIME: 7 AM

END TIME: 10 AM

PREPARED BY: Riddell, Cuilka

ADDITIONAL INFORMATION:

Test medium used: Water

Drawing No: 5B1108-02-DR-80

Gauge #1: 5B-D4

Gauge #2: 5B-DG-57C

Chart Recorder #: 5B-DG-57C

TEST RESULTS:

- Acceptable; no leaks detected.

ACCEPTANCE

QUALITY CONTROL INSPECTOR: _____ Print: Joelle Deerb

CUSTOMER REPRESENTATIVE: _____ Print: Dan DeGroot

AUTHORIZED INSPECTOR: — Print: —

COMMENTS: 14A

5Blue
Process Equipment Inc.

Hydrotest: Job # 5B1108-80
Date: 17-Oct-13
Client: Encana
Dwg #s : 5B1108-08-DR-80-xxx
Items: 1 x Spool

Test Paramenters
Test Pressure : 1110 PSI
Duration: 1 hour (minimum)
Medium: Water

Comments: The following spool was tested in this loop:
14A

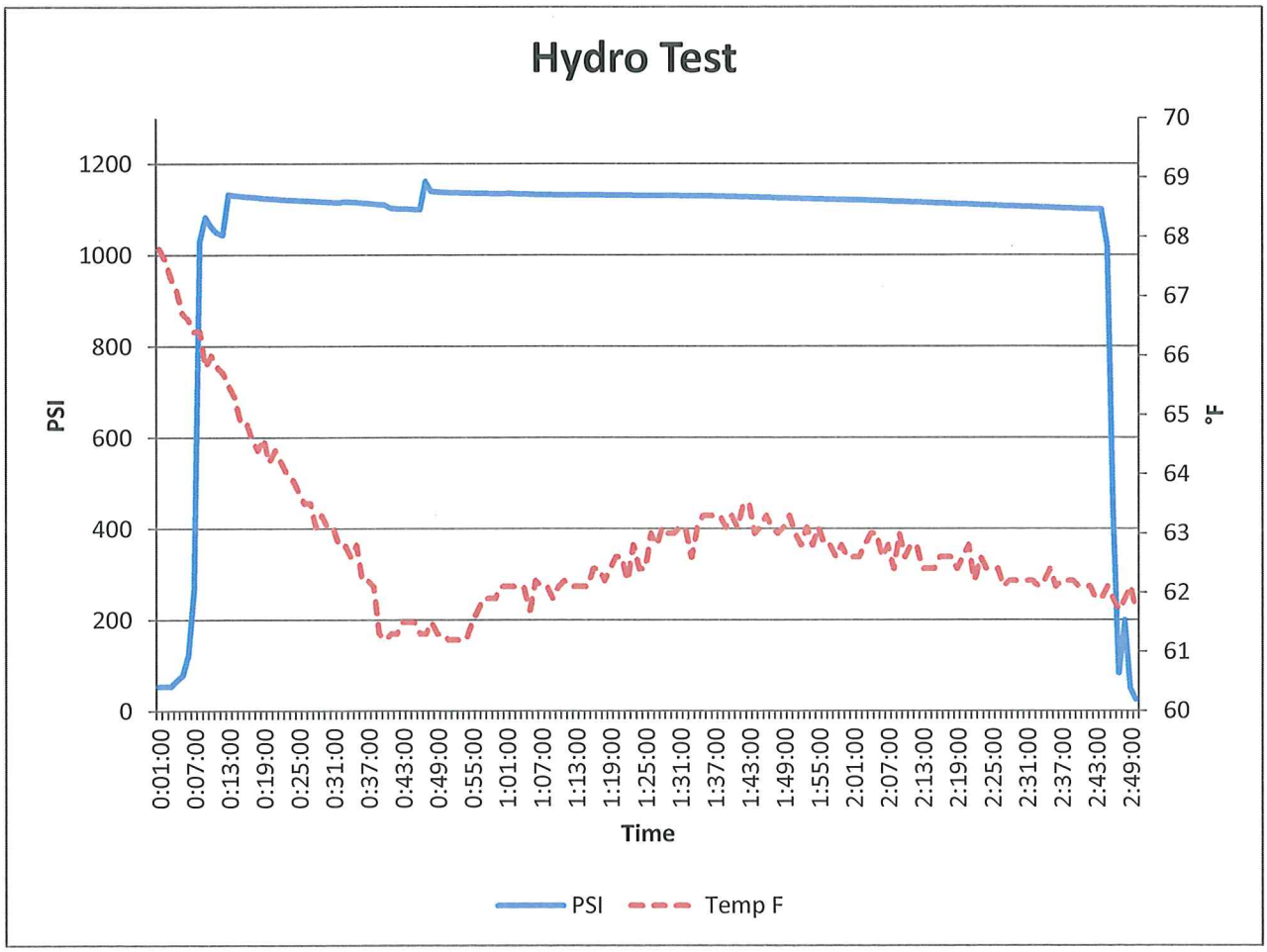

5Blue Job #: 5B1108-80 (1 x spool)
Gauge: WIKA, CPG1000, 2252092, 4.04
Log Type: CONTINUOUS
Sample Type: INTERVAL END
Interval: 1 minute
Unit: PSI
Custom Factor: 1.000 / psi
Trip Setpoint: 1.0 PSI
Trip Reset: 0.0 PSI
Initial Zero: 0.6 PSI
Initial Tare: 0.0 PSI

			Min Temp	61.2
			Max Temp	67.8
	Time	PSI		°F
Pressure	0:01:00	53.3	Temperature	67.8
Pressure	0:02:00	53.3	Temperature	67.6
Pressure	0:03:00	53.3	Temperature	67.3
Pressure	0:04:00	66.2	Temperature	67.1
Pressure	0:05:00	77.8	Temperature	66.7
Pressure	0:06:00	121.3	Temperature	66.6
Pressure	0:07:00	264.6	Temperature	66.4
Pressure	0:08:00	1029.8	Temperature	66.4
Pressure	0:09:00	1082.8	Temperature	65.8
Pressure	0:10:00	1063	Temperature	66
Pressure	0:11:00	1048.8	Temperature	65.8
Pressure	0:12:00	1043.9	Temperature	65.7
Pressure	0:13:00	1132.4	Temperature	65.5
Pressure	0:14:00	1130.3	Temperature	65.3
Pressure	0:15:00	1128.7	Temperature	64.9
Pressure	0:16:00	1127.8	Temperature	64.9
Pressure	0:17:00	1126.6	Temperature	64.6
Pressure	0:18:00	1125.5	Temperature	64.4
Pressure	0:19:00	1124.5	Temperature	64.6
Pressure	0:20:00	1123.5	Temperature	64.2
Pressure	0:21:00	1122.5	Temperature	64.4
Pressure	0:22:00	1121.6	Temperature	64.2
Pressure	0:23:00	1120.7	Temperature	64
Pressure	0:24:00	1119.9	Temperature	63.9
Pressure	0:25:00	1119.2	Temperature	63.7
Pressure	0:26:00	1118.3	Temperature	63.5
Pressure	0:27:00	1117.6	Temperature	63.5
Pressure	0:28:00	1117.5	Temperature	63.1
Pressure	0:29:00	1116.8	Temperature	63.3
Pressure	0:30:00	1116	Temperature	63.1
Pressure	0:31:00	1115.2	Temperature	63.1
Pressure	0:32:00	1114.6	Temperature	62.8
Pressure	0:33:00	1116.7	Temperature	62.8
Pressure	0:34:00	1115.9	Temperature	62.6

	Time	PSI		°F
Pressure	0:35:00	1114.8	Temperature	62.8
Pressure	0:36:00	1113.8	Temperature	62.2
Pressure	0:37:00	1113.2	Temperature	62.2
Pressure	0:38:00	1111.8	Temperature	62.1
Pressure	0:39:00	1110.6	Temperature	61.3
Pressure	0:40:00	1109.5	Temperature	61.2
Pressure	0:41:00	1102.3	Temperature	61.3
Pressure	0:42:00	1101.4	Temperature	61.3
Pressure	0:43:00	1100.8	Temperature	61.5
Pressure	0:44:00	1100.3	Temperature	61.5
Pressure	0:45:00	1099.9	Temperature	61.5
Pressure	0:46:00	1099.2	Temperature	61.3
Pressure	0:47:00	1161.2	Temperature	61.3
Pressure	0:48:00	1139.1	Temperature	61.5
Pressure	0:49:00	1137.9	Temperature	61.3
Pressure	0:50:00	1137.2	Temperature	61.3
Pressure	0:51:00	1136.7	Temperature	61.2
Pressure	0:52:00	1136.2	Temperature	61.2
Pressure	0:53:00	1135.8	Temperature	61.2
Pressure	0:54:00	1135.3	Temperature	61.2
Pressure	0:55:00	1135	Temperature	61.5
Pressure	0:56:00	1134.8	Temperature	61.7
Pressure	0:57:00	1134.5	Temperature	61.9
Pressure	0:58:00	1134.3	Temperature	61.9
Pressure	0:59:00	1134.1	Temperature	61.9
Pressure	1:00:00	1134	Temperature	62.1
Pressure	1:01:00	1134.5	Temperature	62.1
Pressure	1:02:00	1134.5	Temperature	62.1
Pressure	1:03:00	1134.1	Temperature	62.1
Pressure	1:04:00	1133.3	Temperature	62.1
Pressure	1:05:00	1132.9	Temperature	61.7
Pressure	1:06:00	1132.3	Temperature	62.2
Pressure	1:07:00	1131.9	Temperature	62.1
Pressure	1:08:00	1131.7	Temperature	62.1
Pressure	1:09:00	1131.5	Temperature	61.9
Pressure	1:10:00	1131.1	Temperature	62.1
Pressure	1:11:00	1131	Temperature	62.2
Pressure	1:12:00	1131	Temperature	62.1
Pressure	1:13:00	1131	Temperature	62.1
Pressure	1:14:00	1131.1	Temperature	62.1
Pressure	1:15:00	1131	Temperature	62.1
Pressure	1:16:00	1130.9	Temperature	62.4
Pressure	1:17:00	1130.8	Temperature	62.4
Pressure	1:18:00	1130.8	Temperature	62.2
Pressure	1:19:00	1130.6	Temperature	62.4
Pressure	1:20:00	1130.5	Temperature	62.6

	Time	PSI		°F
Pressure	1:21:00	1130.5	Temperature	62.6
Pressure	1:22:00	1130.4	Temperature	62.2
Pressure	1:23:00	1130.2	Temperature	62.8
Pressure	1:24:00	1130	Temperature	62.4
Pressure	1:25:00	1129.9	Temperature	62.4
Pressure	1:26:00	1129.9	Temperature	63
Pressure	1:27:00	1129.8	Temperature	62.8
Pressure	1:28:00	1129.6	Temperature	63.1
Pressure	1:29:00	1129.5	Temperature	63
Pressure	1:30:00	1129.5	Temperature	63
Pressure	1:31:00	1129.4	Temperature	63.1
Pressure	1:32:00	1129.3	Temperature	63.1
Pressure	1:33:00	1129.3	Temperature	62.6
Pressure	1:34:00	1129.1	Temperature	63.1
Pressure	1:35:00	1129	Temperature	63.3
Pressure	1:36:00	1128.9	Temperature	63.3
Pressure	1:37:00	1128.7	Temperature	63.3
Pressure	1:38:00	1128.3	Temperature	63.3
Pressure	1:39:00	1128.1	Temperature	63.1
Pressure	1:40:00	1127.8	Temperature	63.3
Pressure	1:41:00	1127.5	Temperature	63.1
Pressure	1:42:00	1127.2	Temperature	63.5
Pressure	1:43:00	1126.9	Temperature	63.5
Pressure	1:44:00	1126.5	Temperature	63
Pressure	1:45:00	1126.3	Temperature	63.1
Pressure	1:46:00	1125.8	Temperature	63.3
Pressure	1:47:00	1125.5	Temperature	63.1
Pressure	1:48:00	1125	Temperature	63
Pressure	1:49:00	1124.5	Temperature	63.1
Pressure	1:50:00	1124.1	Temperature	63.3
Pressure	1:51:00	1123.7	Temperature	63
Pressure	1:52:00	1123.3	Temperature	62.8
Pressure	1:53:00	1123	Temperature	63.1
Pressure	1:54:00	1122.8	Temperature	62.8
Pressure	1:55:00	1122.3	Temperature	63.1
Pressure	1:56:00	1122	Temperature	62.8
Pressure	1:57:00	1121.6	Temperature	62.8
Pressure	1:58:00	1121.3	Temperature	62.6
Pressure	1:59:00	1120.9	Temperature	62.8
Pressure	2:00:00	1120.8	Temperature	62.6
Pressure	2:01:00	1120.3	Temperature	62.6
Pressure	2:02:00	1120.1	Temperature	62.6
Pressure	2:03:00	1119.7	Temperature	62.8
Pressure	2:04:00	1119.1	Temperature	63
Pressure	2:05:00	1118.8	Temperature	63
Pressure	2:06:00	1118.4	Temperature	62.6

	Time	PSI		°F
Pressure	2:07:00	1118	Temperature	62.8
Pressure	2:08:00	1117.4	Temperature	62.4
Pressure	2:09:00	1116.8	Temperature	63
Pressure	2:10:00	1116.3	Temperature	62.6
Pressure	2:11:00	1115.6	Temperature	62.8
Pressure	2:12:00	1115.1	Temperature	62.8
Pressure	2:13:00	1114.8	Temperature	62.4
Pressure	2:14:00	1114.2	Temperature	62.4
Pressure	2:15:00	1113.7	Temperature	62.4
Pressure	2:16:00	1113.2	Temperature	62.6
Pressure	2:17:00	1112.8	Temperature	62.6
Pressure	2:18:00	1112.3	Temperature	62.6
Pressure	2:19:00	1111.7	Temperature	62.4
Pressure	2:20:00	1111.3	Temperature	62.6
Pressure	2:21:00	1110.8	Temperature	62.8
Pressure	2:22:00	1110.3	Temperature	62.2
Pressure	2:23:00	1109.7	Temperature	62.6
Pressure	2:24:00	1109.1	Temperature	62.4
Pressure	2:25:00	1108.7	Temperature	62.4
Pressure	2:26:00	1108	Temperature	62.4
Pressure	2:27:00	1107.6	Temperature	62.1
Pressure	2:28:00	1107.1	Temperature	62.2
Pressure	2:29:00	1106.6	Temperature	62.2
Pressure	2:30:00	1106	Temperature	62.2
Pressure	2:31:00	1105.7	Temperature	62.2
Pressure	2:32:00	1105.2	Temperature	62.2
Pressure	2:33:00	1104.7	Temperature	62.1
Pressure	2:34:00	1104.3	Temperature	62.2
Pressure	2:35:00	1103.7	Temperature	62.4
Pressure	2:36:00	1103.3	Temperature	62.1
Pressure	2:37:00	1102.6	Temperature	62.2
Pressure	2:38:00	1102.2	Temperature	62.2
Pressure	2:39:00	1101.8	Temperature	62.2
Pressure	2:40:00	1101.3	Temperature	62.1
Pressure	2:41:00	1100.8	Temperature	62.1
Pressure	2:42:00	1100.6	Temperature	62.1
Pressure	2:43:00	1100.1	Temperature	61.9
Pressure	2:44:00	1099.6	Temperature	61.9
Pressure	2:45:00	1019.8	Temperature	62.1
Pressure	2:46:00	442.3	Temperature	61.9
Pressure	2:47:00	82.4	Temperature	61.7
Pressure	2:48:00	199	Temperature	61.9
Pressure	2:49:00	48.5	Temperature	62.1
Pressure	2:50:00	25	Temperature	61.7

TARPON ENERGY SERVICES LTD.

CALIBRATION REPORT

PREPARED FOR 5 BLUE 2303 – 8 STREET, NISKU, AB. T9E 7Z3

INSTRUMENT INFORMATION

MANUFACTURER: **CPW**	MODEL NUMBER: **4½" FACE ½ " NPT**
SERIAL NUMBER: **5B-D4**	WORK TICKET: **11470**
TYPE: **PRESSURE GAUGE**	RANGE: **0-3000 PSI**
CALIBRATION DATE: **12-Aug-2013**	CALIBRATION DUE DATE: **12-Aug-2014**

CALIBRATION DATA

TEST POINT	AS FOUND	AS LEFT
0%	0	0
20%	550	600
50%	1450	1500
80%	2350	2400
100%	2950	3000

TEST EQUIPMENT USED

SERIAL NO.	MAKE	MODEL NO.	CALIBRATION DATE
TESHOP2	CRYSTAL	XP2i	9-Aug-2013

COMMENTS: The instrument was calibrated against laboratory standards that are either traceable to the National Institute of Standards and Technology, (NIST), National Research Council, (NRC), or are derived by approved ratio techniques.

CALIBRATION TECHNICIAN: **Justin Palermo**

ALEXANDER WIEGAND SE & Co. KG

Abnahmeprüfzeugnis 3.1 nach DIN EN 10204
Acceptance Test Certificate 3.1 according to EN 10204

Typ *Type*	CPG1000-BEU-AIZZM3-Z	Zeugnis-Nr. *Certificate No.*	11220922520921205 2012
Kalibriertemp. *Temperature*	23.0°C	Datum *Date*	December 5, 2012
		Seriennummer *Serial Number*	2252092

Referenzgeräte
Reference Instruments

Gerätecode *Asset*	Hersteller *Manufacturer*	Typ *Model Number*	Kalibrierdatum *Cal. Date*	Fälligkeitsdatum *Due Date*
50893	Ruska	7310-17A-1	5-Jan-12	4-Jan-13

Ergebnis
Results

Vorgabe	Ergebnis	Zulässige Grenzen		Konformität
Parameter	*Result*	*Acceptance Limits Low*	*High*	*TUR*
0.0 to 5000.0 psi Verification.				
5000.0_psi	4999.4	4997.5	5002.5	PASS
4500.0_psi	4499.9	4497.5	4502.5	PASS
4000.0_psi	3999.8	3997.5	4002.5	PASS
3000.0_psi	2999.7	2997.5	3002.5	PASS
2000.0_psi	1999.7	1997.5	2002.5	PASS
1500.0_psi	1499.8	1497.5	1502.5	PASS
1000.0_psi	999.8	997.5	1002.5	PASS
400.0_psi	399.9	397.5	402.5	PASS
0.0_psi	0.0	-2.5	2.5	PASS
0.00 to 344.67 Bar Verification.				
344.74"Bar"	344.70	344.57	344.91	PASS
310.26"Bar"	310.26	310.09	310.43	PASS
275.79"Bar"	275.78	275.62	275.96	PASS
206.84"Bar"	206.82	206.67	207.01	PASS
137.90"Bar"	137.87	137.73	138.07	PASS
103.42"Bar"	103.41	103.25	103.59	PASS
68.95"Bar"	68.93	68.78	69.12	PASS
27.58"Bar"	27.57	27.41	27.75	PASS
0.00"Bar"	0.00	-0.17	0.17	PASS
0 to 34467 kPa Verification.				
34474_kPa	34470	34457	34491	PASS
31026_kPa	31026	31009	31043	PASS

ALEXANDER WIEGAND SE & Co. KG

Abnahmeprüfzeugnis 3.1 nach DIN EN 10204

Acceptance Test Certificate 3.1 according to EN 10204

Vorgabe	Ergebnis	Zulässige Grenzen		Konformität
Parameter	*Result*	*Acceptance Limits Low*	*High*	*TUR*
27579_kPa	27578	27562	27596	PASS
20684_kPa	20682	20667	20701	PASS
13790_kPa	13787	13773	13807	PASS
10342_kPa	10341	10325	10359	PASS
6895_kPa	6893	6878	6912	PASS
2758_kPa	2757	2741	2775	PASS
0_kPa	0	-17	17	PASS

Der Kalibriergegenstand hält die Fehlergrenzen nach Herstellerangaben ein

Object keeps the specification

Die Kalibrierung erfolgte auf der Grundlage der folgenden Norm: */ Calibration was carried out according to the following norm:*

- GAUGE MASTER : (1 year) FINAL VER MAN/8100 7310C J

Bemerkungen: / Extensions:

Abnahmebeauftragter
Company Expert

Tom Fatur

Prüfer
Tested by

Florin Visuian

EC Declaration of Conformity

We

WIKA Alexander Wiegand SE & Co. KG
Alexander-Wiegand-Straße 30
63911 Klingenberg – Germany

declare under our sole responsibility that the product

Precision Digital Pressure Gauge CPG1000

to which this declaration relates is in conformity with the following standard(s) or other normative document(s)

- EN 61326-1:2006 (Annex A, Emission Group 1, Class B)
- EN 60079-0:2006
- EN 60079-15:2005

following the provisions of the directives:

94/9/EC

2004/108/EC.

Klingenberg, October 2009

Harald Hartl, Quality Assurance

5Blue
Process Equipment Inc.

JOB NUMBER: 1108-80

TEST DATE: 10 Oct 2013

DESCRIPTION: Process piping

HYDROTEST PROCEDURE / REPORT

DESIGN PRESSURE: 285 PSI

TEST PRESSURE: 428 PSI

DESIGN TEMPERATURE: 100°F

TEST TEMPERATURE: 10°C SHOP

MINIMUM HOLD TIME: 1 hour

RECORDER REQUIRED: ☑ YES ☐ NO

START TIME: 9:30 Am

END TIME:

PREPARED BY: Riddell

ADDITIONAL INFORMATION:

Test medium used: Water

Drawing No: SB1108-02-DR-80

Gauge #1: SB-B4

Gauge #2: SB-DG-3K

Chart Recorder #: SB-DG-3K

TEST RESULTS:

- Acceptable; no leaks detected.

ACCEPTANCE

QUALITY CONTROL INSPECTOR: Joelle Dear Print: Joelle Dear

CUSTOMER REPRESENTATIVE: Print: Dan DeGroot

AUTHORIZED INSPECTOR: N/A Print: N/A

COMMENTS: 7B, 7D, 9A

5Blue
Process Equipment Inc.

Hydrotest: Job # 5B1108-80
Date: 10-Oct-13
Client: Encana
Dwg #s : 5B1108-02-DR-80-xxx
Items: Spools (x 3)

Test Paramenters
Test Pressure: 428 PSI
Duration: 1 hour (minimum)
Medium: Water

Comments: The following spools were tested in this loop:
7B
7D
9A

Note: This test was conducted in conjunction with the following job with similar test pressure
Job # 5B1076-80 (11 spools & 5 as-built spools)

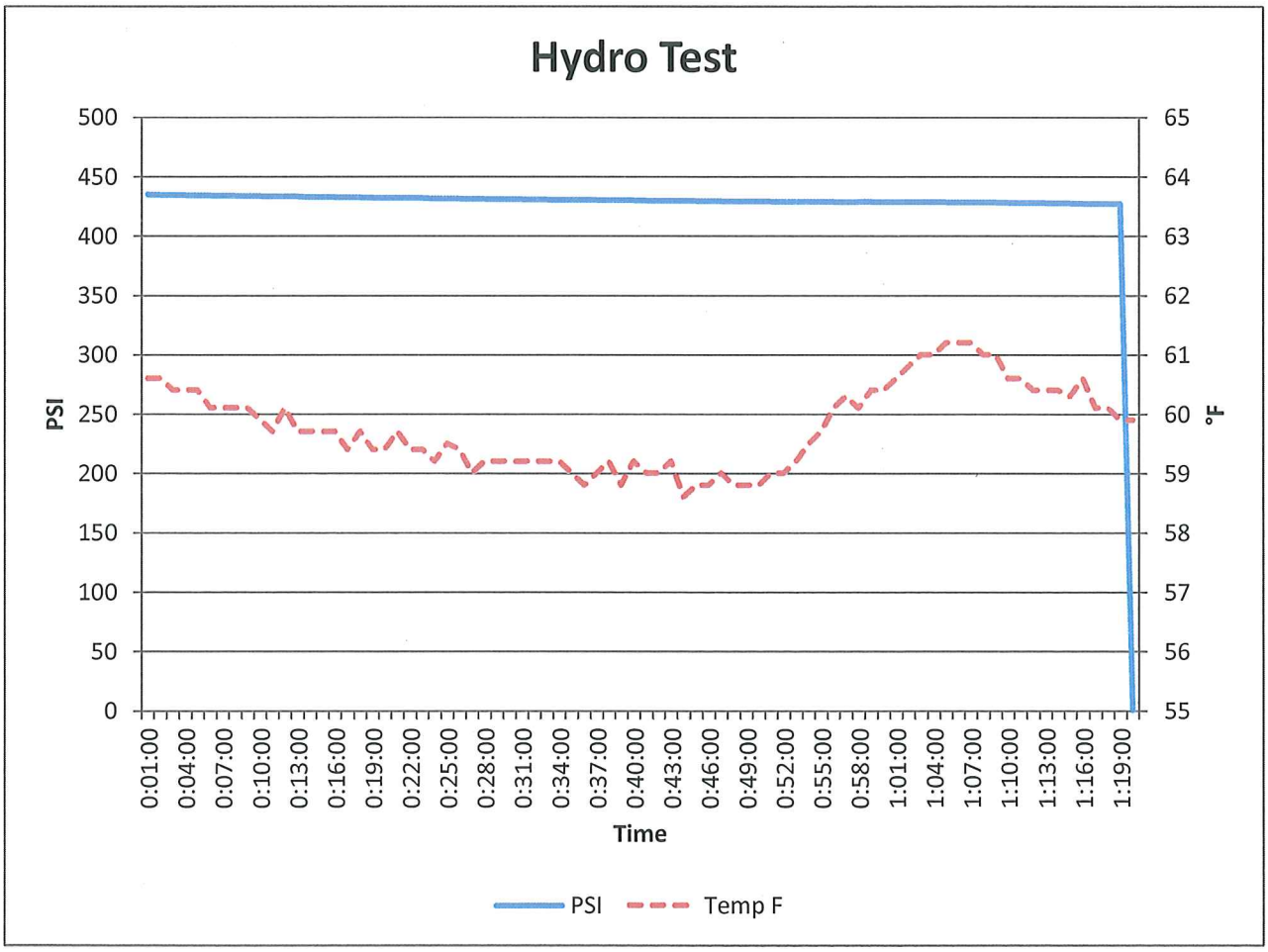

5Blue Job #: 5B1108-80 (3 x spools)
Gauge: WIKA, CPG1000, 2220063, 4.04
Log Type: CONTINUOUS
Sample Type: INTERVAL END
Interval: 1 minute
Unit: PSI
Custom Factor: 1.000 / psi
Trip Setpoint: 0.0 PSI
Trip Reset: 0.0 PSI
Initial Zero: -0.9 PSI
Initial Tare: 0.0 PSI

			Min Temp	58.6
			Max Temp	61.2
	Time	PSI		°F
Pressure	0:01:00	435.2	Temperature	60.6
Pressure	0:02:00	435.1	Temperature	60.6
Pressure	0:03:00	434.9	Temperature	60.4
Pressure	0:04:00	434.8	Temperature	60.4
Pressure	0:05:00	434.6	Temperature	60.4
Pressure	0:06:00	434.4	Temperature	60.1
Pressure	0:07:00	434.3	Temperature	60.1
Pressure	0:08:00	434.3	Temperature	60.1
Pressure	0:09:00	434.1	Temperature	60.1
Pressure	0:10:00	433.9	Temperature	59.9
Pressure	0:11:00	433.8	Temperature	59.7
Pressure	0:12:00	433.7	Temperature	60.1
Pressure	0:13:00	433.6	Temperature	59.7
Pressure	0:14:00	433.3	Temperature	59.7
Pressure	0:15:00	433.3	Temperature	59.7
Pressure	0:16:00	433.1	Temperature	59.7
Pressure	0:17:00	433	Temperature	59.4
Pressure	0:18:00	432.9	Temperature	59.7
Pressure	0:19:00	432.6	Temperature	59.4
Pressure	0:20:00	432.5	Temperature	59.4
Pressure	0:21:00	432.4	Temperature	59.7
Pressure	0:22:00	432.3	Temperature	59.4
Pressure	0:23:00	432.3	Temperature	59.4
Pressure	0:24:00	431.9	Temperature	59.2
Pressure	0:25:00	431.9	Temperature	59.5
Pressure	0:26:00	431.9	Temperature	59.4
Pressure	0:27:00	431.7	Temperature	59
Pressure	0:28:00	431.6	Temperature	59.2
Pressure	0:29:00	431.4	Temperature	59.2
Pressure	0:30:00	431.4	Temperature	59.2
Pressure	0:31:00	431.3	Temperature	59.2
Pressure	0:32:00	431.1	Temperature	59.2
Pressure	0:33:00	431	Temperature	59.2
Pressure	0:34:00	430.9	Temperature	59.2

	Time	PSI		°F
Pressure	0:35:00	430.8	Temperature	59
Pressure	0:36:00	430.8	Temperature	58.8
Pressure	0:37:00	430.7	Temperature	59
Pressure	0:38:00	430.5	Temperature	59.2
Pressure	0:39:00	430.4	Temperature	58.8
Pressure	0:40:00	430.4	Temperature	59.2
Pressure	0:41:00	430.2	Temperature	59
Pressure	0:42:00	430.1	Temperature	59
Pressure	0:43:00	430	Temperature	59.2
Pressure	0:44:00	430	Temperature	58.6
Pressure	0:45:00	429.9	Temperature	58.8
Pressure	0:46:00	429.7	Temperature	58.8
Pressure	0:47:00	429.6	Temperature	59
Pressure	0:48:00	429.5	Temperature	58.8
Pressure	0:49:00	429.4	Temperature	58.8
Pressure	0:50:00	429.3	Temperature	58.8
Pressure	0:51:00	429.3	Temperature	59
Pressure	0:52:00	429.2	Temperature	59
Pressure	0:53:00	429.1	Temperature	59.2
Pressure	0:54:00	429.1	Temperature	59.5
Pressure	0:55:00	429.1	Temperature	59.7
Pressure	0:56:00	429.1	Temperature	60.1
Pressure	0:57:00	429	Temperature	60.3
Pressure	0:58:00	429	Temperature	60.1
Pressure	0:59:00	429.1	Temperature	60.4
Pressure	1:00:00	429	Temperature	60.4
Pressure	1:01:00	429	Temperature	60.6
Pressure	1:02:00	429	Temperature	60.8
Pressure	1:03:00	429	Temperature	61
Pressure	1:04:00	428.8	Temperature	61
Pressure	1:05:00	428.8	Temperature	61.2
Pressure	1:06:00	428.7	Temperature	61.2
Pressure	1:07:00	428.7	Temperature	61.2
Pressure	1:08:00	428.5	Temperature	61
Pressure	1:09:00	428.5	Temperature	61
Pressure	1:10:00	428.4	Temperature	60.6
Pressure	1:11:00	428.2	Temperature	60.6
Pressure	1:12:00	428.1	Temperature	60.4
Pressure	1:13:00	428	Temperature	60.4
Pressure	1:14:00	427.9	Temperature	60.4
Pressure	1:15:00	427.8	Temperature	60.3
Pressure	1:16:00	427.6	Temperature	60.6
Pressure	1:17:00	427.4	Temperature	60.1
Pressure	1:18:00	427.3	Temperature	60.1
Pressure	1:19:00	427.2	Temperature	59.9
Pressure	1:20:00	0.6	Temperature	59.9

TARPON ENERGY SERVICES LTD.

ISO 9001: 2008 Certified

Certificate of Calibration

For Instrument :	WIKA CPG1000-BES-AIZZM3-Z
Customer Name :	5BLUE PROCESS EQUIPMENT
Description :	DIGTAL TEST GAUGE
Asset Number :	5B-DG-3K
Serial Number :	2220063
Certificate # :	9781-1

TARPON ENERGY SERVICES LTD. Certifies that...

the above described instrument met or exceeded all published (OEM) specifications at the time of calibration specified below; and has been calibrated using standards whose accuracies are traceable to the National Institute of Standards and Technology (NIST) and or National Research Council (NRC), or have been derived from accepted values or physical constants, or have been derived by ratio or self calibration techniques.

CALIBRATION INFORMATION

Cal Date Time	10-May-2013 10:58:56	Temperature	23.00°C	Work Order #	9781
Next Cal Due	10-May-2014	Humidity	40 %		
Pass	Y	Tech	Chuck Hwang		
Seals OK	Y	Note	N/A		
Cal Procedure	WIKA DIGITAL TEST GAUGE 3000PSI: (1 YEAR) CAL VER			Revision	1.0

STANDARDS USED FOR CALIBRATION

Asset Number	Serial No.	Mfg	Model	Description	Cal. Date	Due Date
N-12	351	DH INST.	7202-M	Deadweight Base	10/9/2012	10/9/2013
N-14	592	DH INST.	PC-7300-2	Piston Cylinder	10/11/2012	10/11/2013
N-16	544	DH INST.	PG7000	Mass Carrying Bell	10/9/2012	10/9/2013
N-17	2199	DH INST.	MS-7002-35	35 kg Mass Set	10/10/2012	10/10/2013

Calibration Technician

Quality Assurance Approval

TARPON ENERGY SERVICES LTD.

ISO 9001: 2008 Certified

Calibration Results

For Instrument :	WIKA CPG1000-BES-AIZZM3-Z	Result:	PASS
	DIGTAL TEST GAUGE	Performed on:	5/10/2013 at 10:58:56
	Serial No: 2220063	Performed by:	Chuck Hwang
	Asset No. 5B-DG-3K	Environment:	Temp. 23.0°C Humid. 40 %
	Cal. Date : 10-May-2013	Condition F/L:	FOUND-LEFT
	Cal. Due Date : 10-May-2014	Certificate # :	9781-1
Customer :	5BLUE PROCESS EQUIPMENT	Work Order # :	9781

Notes: N/A

Standards Used

Asset Number	Serial No.	Mfg	Model	Description	Cal. Date	Due Date
N-12	351	DH INST.	7202-M	Deadweight Base	10/9/2012	10/9/2013
N-14	592	DH INST.	PC-7300-2	Piston Cylinder	10/11/2012	10/11/2013
N-16	544	DH INST.	PG7000	Mass Carrying Bell	10/9/2012	10/9/2013
N-17	2199	DH INST.	MS-7002-35	35 kg Mass Set	10/10/2012	10/10/2013

Test Results

Test Description	True Value	Test Result	Lower limit	Upper limit	% Tol	P / F
PRESSURE TESTS						
TEST POINT 0.0 psi		0.0	-1.5	1.5	0	P
TEST POINT 750.0 psi		749.6	748.5	751.5	26.7	P
TEST POINT 1500.0 psi		1499.6	1498.5	1501.5	26.7	P
TEST POINT 2250.0 psi		2249.5	2248.5	2251.5	33.3	P
TEST POINT 3000.0 psi		2999.3	2998.5	3001.5	46.7	P

End of Test Data

- If AS FOUND/AS LEFT is not listed separately, this means that no adjustment has been made and AS FOUND = AS LEFT.
- ERROR % TOL field contains the error as a percentage of the tolerance, and gives a quick impression of how close the instrument is to the allowed tolerance

If there are any questions about tolerances, or the certificate please call (780)466-6000.

TARPON
ENERGY SERVICES LTD.

CALIBRATION REPORT

PREPARED FOR 5 BLUE

INSTRUMENT INFORMATION

MANUFACTURER: **WIKA**	MODEL NUMBER: **4½" FACE ½ " NPT**
SERIAL NUMBER: **5B-B4**	WORK TICKET: **2192**
TYPE: **PRESSURE GAUGE**	RANGE: **0-1000 PSI**
CALIBRATION DATE: **2-APRIL-2013**	CALIBRATION DUE DATE: **2-APRIL-2014**

CALIBRATION DATA

TEST POINT	AS FOUND	AS LEFT
0%	0	0
20%	200	200
50%	500	500
80%	800	800
100%	1000	1000

TEST EQUIPMENT USED

SERIAL NO.	MAKE	MODEL NO.	CALIBRATION DATE
TE-SHOP1	CRYSTAL	XP2I	11-FEB-2013

COMMENTS: The instrument was calibrated against laboratory standards that are either traceable to the National Institute of Standards and Technology, (NIST), National Research Council, (NRC), or are derived by approved ratio techniques.

CALIBRATION TECHNICIAN: **Brad Kaplan**

5Blue
Process Equipment Inc.

JOB NUMBER: 1108-80

TEST DATE: 16 Sept, 2013

DESCRIPTION: process piping

HYDROTEST PROCEDURE / REPORT

DESIGN PRESSURE: 285 PSI

TEST PRESSURE: 428 PSI

DESIGN TEMPERATURE: 100°F

TEST TEMPERATURE: 20°C / SHOP

MINIMUM HOLD TIME: 1 hour

RECORDER REQUIRED: ☑ YES ☐ NO

START TIME: 10:30 AM

END TIME: 1:30 PM

PREPARED BY: Riddell, Bergstrom

ADDITIONAL INFORMATION:

Test medium used: Water

Drawing No: SB1108-80

Gauge #1: SB-B4

Gauge #2: SB-DG-3K

Chart Recorder #: SB-DG-3K

TEST RESULTS:

- Acceptable; no leaks detected.

ACCEPTANCE

QUALITY CONTROL INSPECTOR: Joelle Deer-S Print: Joelle Deer-S

CUSTOMER REPRESENTATIVE: Dan De Groot Print: Dan De Groot

AUTHORIZED INSPECTOR: N/A Print: N/A

COMMENTS:

✓ 1A, 3D, 1B, 3A, 3B, 3C, 9A, 10A, 2F, 2B, 2C, 7A, 2G, 2D, 2E
7B, 4A, 4B, 8A, 12A, 11A, 9H, 7C, 2A,

5Blue
Process Equipment Inc.

Hydrotest: Job # 5B1108-80
Date: 16-Sep-13
Client: Encana
Dwg #s : 5B1108-02-DR-80-xxx
Items: Spools (x 24)

Test Paramenters
Test Pressure: 428 PSI
Duration: 1 hour (minimum)
Medium: Water

Comments: The following spools were tested in this loop:

1A, 1B	8A
2A, 2B, 2C, 2D, 2E, 2F, 2G, 2H	9A
3A, 3B, 3C, 3D	10A
4A, 4B	11A
7A, 7B, 7C	12A

Note: This test was conducted in conjunction with the following job with similar test pressure
Job # 5B1111-25-80 (4 spools)

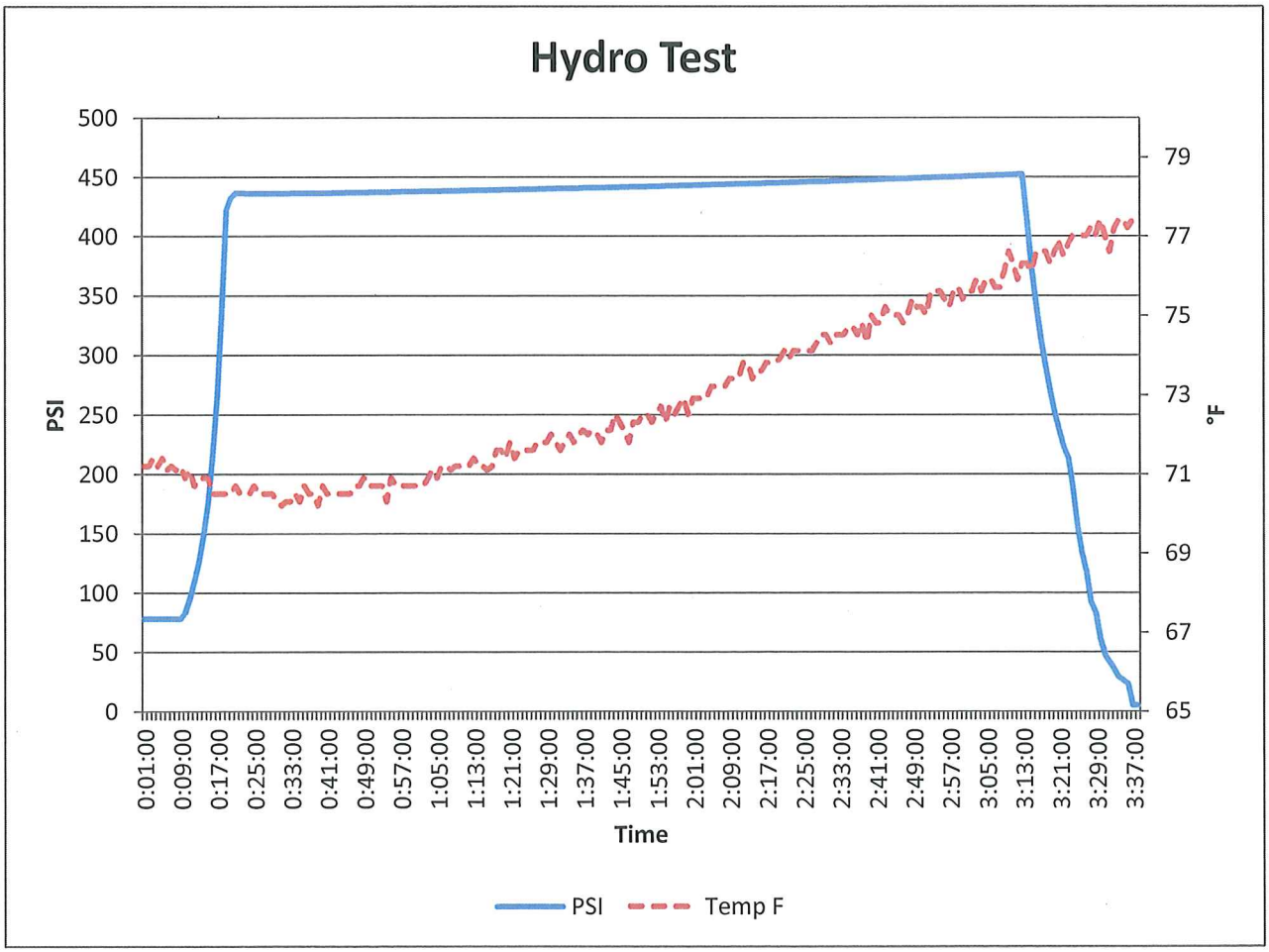

5Blue Job #: 5B1108-80 (24 x spools)
Gauge: WIKA, CPG1000, 2220063, 4.04
Log Type: CONTINUOUS
Sample Type: INTERVAL END
Interval: 1 minute
Unit: PSI
Custom Factor: 1.000 / psi
Trip Setpoint: 0.0 PSI
Trip Reset: 0.0 PSI
Initial Zero: -0.3 PSI
Initial Tare: 0.0 PSI

			Min Temp	70.2
			Max Temp	77.5
	Time	PSI		°F
Pressure	0:01:00	78.2	Temperature	71.2
Pressure	0:02:00	78.2	Temperature	71.2
Pressure	0:03:00	78.2	Temperature	71.4
Pressure	0:04:00	78.1	Temperature	71.2
Pressure	0:05:00	78.2	Temperature	71.4
Pressure	0:06:00	78.1	Temperature	71.1
Pressure	0:07:00	78.2	Temperature	71.2
Pressure	0:08:00	78.1	Temperature	71.1
Pressure	0:09:00	78.1	Temperature	71.2
Pressure	0:10:00	83.1	Temperature	70.9
Pressure	0:11:00	95.3	Temperature	71.1
Pressure	0:12:00	109.6	Temperature	70.7
Pressure	0:13:00	126.4	Temperature	70.9
Pressure	0:14:00	147.8	Temperature	70.9
Pressure	0:15:00	175.5	Temperature	70.9
Pressure	0:16:00	213.9	Temperature	70.5
Pressure	0:17:00	264.6	Temperature	70.5
Pressure	0:18:00	334.2	Temperature	70.5
Pressure	0:19:00	422.3	Temperature	70.5
Pressure	0:20:00	432.5	Temperature	70.5
Pressure	0:21:00	436.5	Temperature	70.7
Pressure	0:22:00	436.3	Temperature	70.5
Pressure	0:23:00	436.3	Temperature	70.5
Pressure	0:24:00	436.2	Temperature	70.5
Pressure	0:25:00	436.2	Temperature	70.7
Pressure	0:26:00	436	Temperature	70.5
Pressure	0:27:00	436	Temperature	70.5
Pressure	0:28:00	436	Temperature	70.5
Pressure	0:29:00	436.2	Temperature	70.5
Pressure	0:30:00	436.1	Temperature	70.3
Pressure	0:31:00	436.2	Temperature	70.2
Pressure	0:32:00	436.2	Temperature	70.3
Pressure	0:33:00	436.2	Temperature	70.3
Pressure	0:34:00	436.3	Temperature	70.5

	Time	PSI		°F
Pressure	0:35:00	436.3	Temperature	70.3
Pressure	0:36:00	436.3	Temperature	70.7
Pressure	0:37:00	436.3	Temperature	70.5
Pressure	0:38:00	436.3	Temperature	70.5
Pressure	0:39:00	436.4	Temperature	70.2
Pressure	0:40:00	436.5	Temperature	70.7
Pressure	0:41:00	436.5	Temperature	70.5
Pressure	0:42:00	436.5	Temperature	70.5
Pressure	0:43:00	436.6	Temperature	70.5
Pressure	0:44:00	436.7	Temperature	70.5
Pressure	0:45:00	436.7	Temperature	70.5
Pressure	0:46:00	436.8	Temperature	70.5
Pressure	0:47:00	436.8	Temperature	70.7
Pressure	0:48:00	436.9	Temperature	70.7
Pressure	0:49:00	436.9	Temperature	70.9
Pressure	0:50:00	437	Temperature	70.7
Pressure	0:51:00	437.1	Temperature	70.7
Pressure	0:52:00	437.2	Temperature	70.7
Pressure	0:53:00	437.3	Temperature	70.7
Pressure	0:54:00	437.3	Temperature	70.3
Pressure	0:55:00	437.3	Temperature	70.9
Pressure	0:56:00	437.5	Temperature	70.7
Pressure	0:57:00	437.5	Temperature	70.7
Pressure	0:58:00	437.6	Temperature	70.7
Pressure	0:59:00	437.6	Temperature	70.7
Pressure	1:00:00	437.7	Temperature	70.7
Pressure	1:01:00	437.8	Temperature	70.7
Pressure	1:02:00	437.9	Temperature	70.7
Pressure	1:03:00	437.9	Temperature	70.9
Pressure	1:04:00	438	Temperature	71.1
Pressure	1:05:00	438	Temperature	70.9
Pressure	1:06:00	438.1	Temperature	71.2
Pressure	1:07:00	438.2	Temperature	71.2
Pressure	1:08:00	438.3	Temperature	71.1
Pressure	1:09:00	438.3	Temperature	71.2
Pressure	1:10:00	438.3	Temperature	71.2
Pressure	1:11:00	438.5	Temperature	71.2
Pressure	1:12:00	438.6	Temperature	71.2
Pressure	1:13:00	438.7	Temperature	71.4
Pressure	1:14:00	438.7	Temperature	71.2
Pressure	1:15:00	438.8	Temperature	71.2
Pressure	1:16:00	438.8	Temperature	71.1
Pressure	1:17:00	439	Temperature	71.2
Pressure	1:18:00	439	Temperature	71.6
Pressure	1:19:00	439.1	Temperature	71.6
Pressure	1:20:00	439.3	Temperature	71.4

	Time	PSI		°F
Pressure	1:21:00	439.3	Temperature	71.8
Pressure	1:22:00	439.3	Temperature	71.4
Pressure	1:23:00	439.4	Temperature	71.6
Pressure	1:24:00	439.5	Temperature	71.6
Pressure	1:25:00	439.5	Temperature	71.6
Pressure	1:26:00	439.7	Temperature	71.6
Pressure	1:27:00	439.7	Temperature	71.8
Pressure	1:28:00	439.8	Temperature	71.8
Pressure	1:29:00	439.9	Temperature	71.8
Pressure	1:30:00	440	Temperature	72
Pressure	1:31:00	440	Temperature	71.8
Pressure	1:32:00	440.3	Temperature	71.6
Pressure	1:33:00	440.3	Temperature	71.8
Pressure	1:34:00	440.4	Temperature	72
Pressure	1:35:00	440.5	Temperature	71.8
Pressure	1:36:00	440.5	Temperature	72
Pressure	1:37:00	440.6	Temperature	72.1
Pressure	1:38:00	440.8	Temperature	72
Pressure	1:39:00	440.8	Temperature	72.1
Pressure	1:40:00	440.9	Temperature	72
Pressure	1:41:00	440.9	Temperature	71.8
Pressure	1:42:00	441	Temperature	72.1
Pressure	1:43:00	441.1	Temperature	72.1
Pressure	1:44:00	441.2	Temperature	72.5
Pressure	1:45:00	441.3	Temperature	72.3
Pressure	1:46:00	441.4	Temperature	72.1
Pressure	1:47:00	441.5	Temperature	71.8
Pressure	1:48:00	441.6	Temperature	72.3
Pressure	1:49:00	441.7	Temperature	72.3
Pressure	1:50:00	441.8	Temperature	72.5
Pressure	1:51:00	441.8	Temperature	72.5
Pressure	1:52:00	442	Temperature	72.3
Pressure	1:53:00	442.1	Temperature	72.5
Pressure	1:54:00	442.1	Temperature	72.7
Pressure	1:55:00	442.3	Temperature	72.3
Pressure	1:56:00	442.4	Temperature	72.7
Pressure	1:57:00	442.5	Temperature	72.5
Pressure	1:58:00	442.6	Temperature	72.7
Pressure	1:59:00	442.7	Temperature	72.9
Pressure	2:00:00	442.8	Temperature	72.5
Pressure	2:01:00	442.9	Temperature	72.9
Pressure	2:02:00	443	Temperature	72.9
Pressure	2:03:00	443.1	Temperature	72.9
Pressure	2:04:00	443.3	Temperature	72.9
Pressure	2:05:00	443.3	Temperature	73.2
Pressure	2:06:00	443.5	Temperature	73.2

	Time	PSI		°F
Pressure	2:07:00	443.6	Temperature	73.2
Pressure	2:08:00	443.6	Temperature	73.2
Pressure	2:09:00	443.8	Temperature	73.4
Pressure	2:10:00	443.9	Temperature	73.4
Pressure	2:11:00	444	Temperature	73.4
Pressure	2:12:00	444.1	Temperature	73.8
Pressure	2:13:00	444.2	Temperature	73.8
Pressure	2:14:00	444.3	Temperature	73.4
Pressure	2:15:00	444.4	Temperature	73.6
Pressure	2:16:00	444.5	Temperature	73.6
Pressure	2:17:00	444.7	Temperature	73.8
Pressure	2:18:00	444.8	Temperature	73.8
Pressure	2:19:00	444.9	Temperature	73.8
Pressure	2:20:00	444.9	Temperature	73.9
Pressure	2:21:00	445.1	Temperature	74.1
Pressure	2:22:00	445.2	Temperature	73.9
Pressure	2:23:00	445.4	Temperature	74.1
Pressure	2:24:00	445.5	Temperature	74.1
Pressure	2:25:00	445.6	Temperature	74.1
Pressure	2:26:00	445.7	Temperature	74.1
Pressure	2:27:00	445.9	Temperature	74.1
Pressure	2:28:00	446	Temperature	74.3
Pressure	2:29:00	446.1	Temperature	74.5
Pressure	2:30:00	446.1	Temperature	74.5
Pressure	2:31:00	446.3	Temperature	74.3
Pressure	2:32:00	446.5	Temperature	74.5
Pressure	2:33:00	446.6	Temperature	74.5
Pressure	2:34:00	446.8	Temperature	74.5
Pressure	2:35:00	446.9	Temperature	74.7
Pressure	2:36:00	447	Temperature	74.7
Pressure	2:37:00	447.2	Temperature	74.5
Pressure	2:38:00	447.2	Temperature	74.8
Pressure	2:39:00	447.3	Temperature	74.3
Pressure	2:40:00	447.6	Temperature	75
Pressure	2:41:00	447.6	Temperature	74.8
Pressure	2:42:00	447.8	Temperature	74.8
Pressure	2:43:00	447.9	Temperature	75.2
Pressure	2:44:00	448	Temperature	75
Pressure	2:45:00	448.2	Temperature	75
Pressure	2:46:00	448.3	Temperature	75
Pressure	2:47:00	448.4	Temperature	74.8
Pressure	2:48:00	448.5	Temperature	75
Pressure	2:49:00	448.6	Temperature	75.4
Pressure	2:50:00	448.8	Temperature	75.2
Pressure	2:51:00	449	Temperature	75.2
Pressure	2:52:00	449.1	Temperature	75

	Time	PSI		°F
Pressure	2:53:00	449.2	Temperature	75.6
Pressure	2:54:00	449.4	Temperature	75.6
Pressure	2:55:00	449.4	Temperature	75.6
Pressure	2:56:00	449.6	Temperature	75.4
Pressure	2:57:00	449.7	Temperature	75.2
Pressure	2:58:00	449.8	Temperature	75.6
Pressure	2:59:00	449.9	Temperature	75.7
Pressure	3:00:00	450.1	Temperature	75.4
Pressure	3:01:00	450.2	Temperature	75.6
Pressure	3:02:00	450.4	Temperature	75.6
Pressure	3:03:00	450.6	Temperature	75.9
Pressure	3:04:00	450.7	Temperature	75.6
Pressure	3:05:00	450.8	Temperature	75.9
Pressure	3:06:00	451	Temperature	75.9
Pressure	3:07:00	451.1	Temperature	75.7
Pressure	3:08:00	451.3	Temperature	75.7
Pressure	3:09:00	451.4	Temperature	76.1
Pressure	3:10:00	451.5	Temperature	76.6
Pressure	3:11:00	451.7	Temperature	76.3
Pressure	3:12:00	451.8	Temperature	75.9
Pressure	3:13:00	452	Temperature	76.3
Pressure	3:14:00	413.1	Temperature	76.3
Pressure	3:15:00	373.7	Temperature	76.1
Pressure	3:16:00	340.5	Temperature	76.6
Pressure	3:17:00	313.1	Temperature	76.6
Pressure	3:18:00	289.4	Temperature	76.6
Pressure	3:19:00	269.2	Temperature	76.3
Pressure	3:20:00	251.7	Temperature	76.6
Pressure	3:21:00	236.6	Temperature	76.8
Pressure	3:22:00	223.2	Temperature	76.5
Pressure	3:23:00	213.9	Temperature	76.8
Pressure	3:24:00	190.1	Temperature	77
Pressure	3:25:00	156.8	Temperature	77
Pressure	3:26:00	134.1	Temperature	77
Pressure	3:27:00	117.5	Temperature	77
Pressure	3:28:00	92	Temperature	77.2
Pressure	3:29:00	82.9	Temperature	77
Pressure	3:30:00	60.9	Temperature	77.4
Pressure	3:31:00	47.1	Temperature	77
Pressure	3:32:00	41.6	Temperature	76.6
Pressure	3:33:00	34.5	Temperature	77.2
Pressure	3:34:00	28.6	Temperature	77.4
Pressure	3:35:00	25.7	Temperature	77.4
Pressure	3:36:00	23.2	Temperature	77.2
Pressure	3:37:00	5.1	Temperature	77.4
Pressure	3:38:00	4.9	Temperature	77.5

TARPON ENERGY SERVICES LTD.

ISO 9001: 2008 Certified

Certificate of Calibration

For Instrument :	WIKA CPG1000-BES-AIZZM3-Z
Customer Name :	5BLUE PROCESS EQUIPMENT
Description :	DIGTAL TEST GAUGE
Asset Number :	5B-DG-3K
Serial Number :	2220063
Certificate # :	9781-1

TARPON ENERGY SERVICES LTD. Certifies that...

the above described instrument met or exceeded all published (OEM) specifications at the time of calibration specified below; and has been calibrated using standards whose accuracies are traceable to the National Institute of Standards and Technology (NIST) and or National Research Council (NRC), or have been derived from accepted values or physical constants, or have been derived by ratio or self calibration techniques.

CALIBRATION INFORMATION

Cal Date Time	10-May-2013 10:58:56	Temperature	23.00°C	Work Order #	9781
Next Cal Due	10-May-2014	Humidity	40 %		
Pass	Y	Tech	Chuck Hwang		
Seals OK	Y	Note	N/A		
Cal Procedure	WIKA DIGITAL TEST GAUGE 3000PSI: (1 YEAR) CAL VER			Revision	1.0

STANDARDS USED FOR CALIBRATION

Asset Number	Serial No.	Mfg	Model	Description	Cal. Date	Due Date
N-12	351	DH INST.	7202-M	Deadweight Base	10/9/2012	10/9/2013
N-14	592	DH INST.	PC-7300-2	Piston Cylinder	10/11/2012	10/11/2013
N-16	544	DH INST.	PG7000	Mass Carrying Bell	10/9/2012	10/9/2013
N-17	2199	DH INST.	MS-7002-35	35 kg Mass Set	10/10/2012	10/10/2013

Calibration Technician

Quality Assurance Approval

Tarpon Energy Services Ltd., 1409 6Street, Nisku, AB.
T9E7M7,

TARPON ENERGY SERVICES LTD.

ISO 9001: 2008 Certified

Calibration Results

For Instrument : WIKA CPG1000-BES-AIZZM3-Z
DIGTAL TEST GAUGE
Serial No: 2220063
Asset No. 5B-DG-3K
Cal. Date : 10-May-2013
Cal. Due Date : 10-May-2014
Customer : 5BLUE PROCESS EQUIPMENT

Notes: N/A

Result: PASS
Performed on: 5/10/2013 at 10:58:56
Performed by: Chuck Hwang
Environment: Temp. 23.0°C Humid. 40 %
Condition F/L: FOUND-LEFT
Certificate # : 9781-1
Work Order # : 9781

Standards Used

Asset Number	Serial No.	Mfg	Model	Description	Cal. Date	Due Date
N-12	351	DH INST.	7202-M	Deadweight Base	10/9/2012	10/9/2013
N-14	592	DH INST.	PC-7300-2	Piston Cylinder	10/11/2012	10/11/2013
N-16	544	DH INST.	PG7000	Mass Carrying Bell	10/9/2012	10/9/2013
N-17	2199	DH INST.	MS-7002-35	35 kg Mass Set	10/10/2012	10/10/2013

Test Results

Test Description	True Value	Test Result	Lower limit	Upper limit	% Tol	P / F
PRESSURE TESTS						
TEST POINT 0.0 psi		0.0	-1.5	1.5	0	P
TEST POINT 750.0 psi		749.6	748.5	751.5	26.7	P
TEST POINT 1500.0 psi		1499.6	1498.5	1501.5	26.7	P
TEST POINT 2250.0 psi		2249.5	2248.5	2251.5	33.3	P
TEST POINT 3000.0 psi		2999.3	2998.5	3001.5	46.7	P

End of Test Data

- If AS FOUND/AS LEFT is not listed separately, this means that no adjustment has been made and AS FOUND = AS LEFT.
- The ERROR % TOL field contains the error as a percentage of the tolerance, and gives a quick impression of how close the instrument is to the allowed tolerance

If there are any questions about tolerances, or the certificate please call (780)466-6000.

TARPON
ENERGY SERVICES LTD.

CALIBRATION REPORT

PREPARED FOR 5 BLUE

INSTRUMENT INFORMATION

MANUFACTURER: **WIKA**	MODEL NUMBER: **4½" FACE ½ " NPT**
SERIAL NUMBER: **5B-B4**	WORK TICKET: **2192**
TYPE: **PRESSURE GAUGE**	RANGE: **0-1000 PSI**
CALIBRATION DATE: **2-APRIL-2013**	CALIBRATION DUE DATE: **2-APRIL-2014**

CALIBRATION DATA

TEST POINT	AS FOUND	AS LEFT
0%	0	0
20%	200	200
50%	500	500
80%	800	800
100%	1000	1000

TEST EQUIPMENT USED

SERIAL NO.	MAKE	MODEL NO.	CALIBRATION DATE
TE-SHOP1	CRYSTAL	XP2I	11-FEB-2013

COMMENTS: The instrument was calibrated against laboratory standards that are either traceable to the National Institute of Standards and Technology, (NIST), National Research Council, (NRC), or are derived by approved ratio techniques.

CALIBRATION TECHNICIAN: **Brad Kaplan**

5Blue
Process Equipment Inc.

JOB NUMBER: SB1108-80

TEST DATE: 31 oct 2013

DESCRIPTION: Instrument tubing hydro

HYDROTEST PROCEDURE / REPORT

DESIGN PRESSURE: 285 PSI

TEST PRESSURE: 428 PSI

DESIGN TEMPERATURE: 100°F

TEST TEMPERATURE: 16°C / SHOP TEMP

MINIMUM HOLD TIME: 1 hour

RECORDER REQUIRED: ☑ YES ☐ NO

START TIME: 7:30 AM

END TIME: 9: AM

PREPARED BY: Riddell

ADDITIONAL INFORMATION:

Test medium used: Water

Drawing No: SB1108-02-DR-00-001 Rev. 1

Gauge #1: SB-B3

Gauge #2: SB-DG-3K

Chart Recorder #: SB-DG-3K

TEST RESULTS:

- Acceptable; no leaks detected.

ACCEPTANCE

QUALITY CONTROL INSPECTOR: Joelle DeR Print: Joelle DeR

CUSTOMER REPRESENTATIVE: [signature] Print: Dan DeGroot

AUTHORIZED INSPECTOR: / Print: /

COMMENTS:

See attached P&ID for list of spools / lines tested.

5Blue
Process Equipment Inc.

Hydrotest: Job # 5B1108-80
Date: 31-Oct-13
Client: Devon
Dwg #s : 5B1108-02-DR-00-001 Rev 1
Items: Instrumentation Tubing Lines

Comments: See attached drawing for tested lines
Lines tested unmounted

Test Paramenters
Test Pressure: 428 PSI
Duration: 1 hour (minimum)
Medium: Water

Note: This test was conducted in conjunction with the following job with similar test pressure
Job # 5B1112-20-80 spools

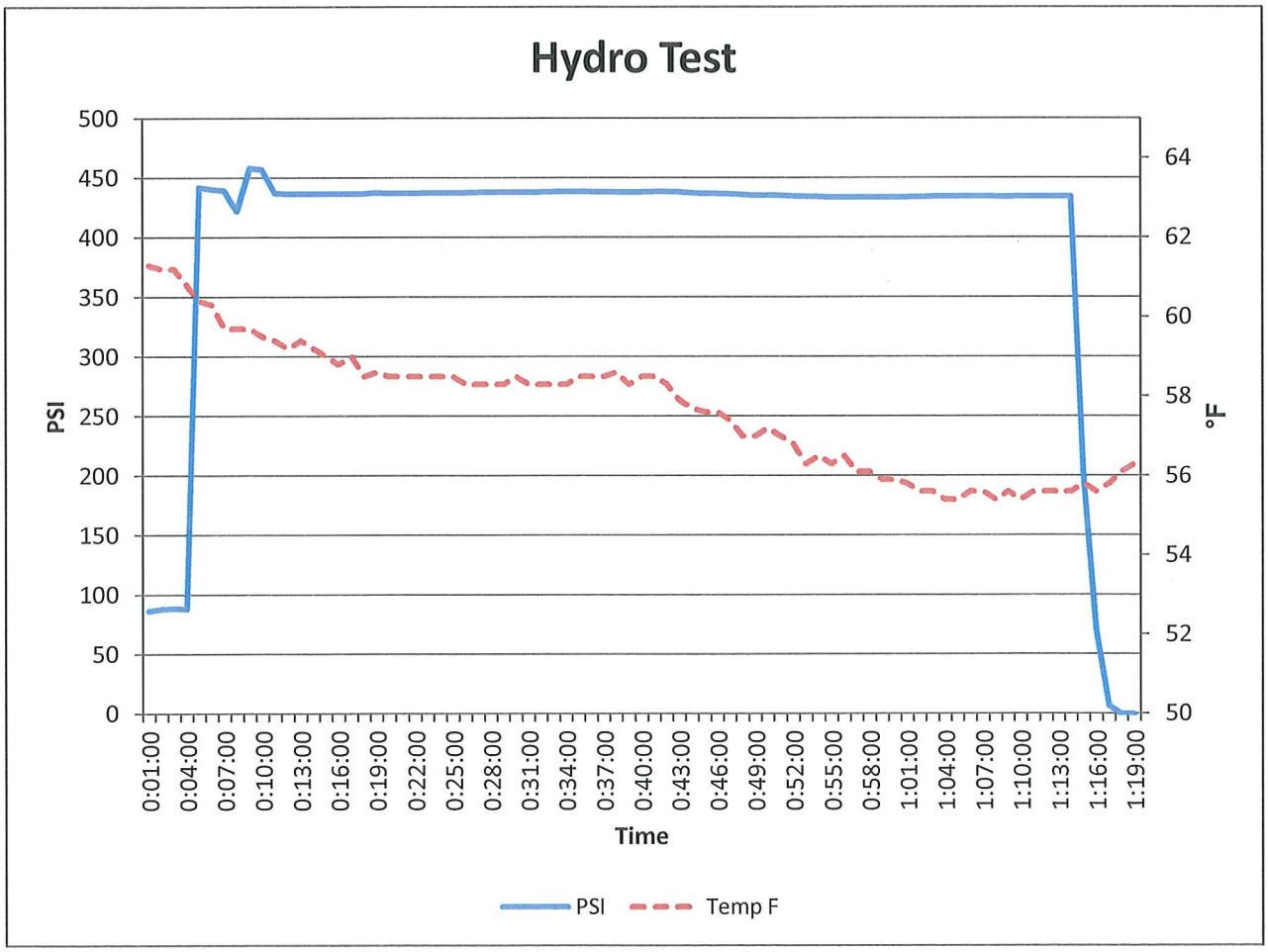

	Time	PSI		°F
Pressure	0:35:00	438.2	Temperature	58.5
Pressure	0:36:00	438.2	Temperature	58.5
Pressure	0:37:00	438.1	Temperature	58.5
Pressure	0:38:00	438.1	Temperature	58.6
Pressure	0:39:00	437.8	Temperature	58.3
Pressure	0:40:00	438.1	Temperature	58.5
Pressure	0:41:00	438.2	Temperature	58.5
Pressure	0:42:00	438.2	Temperature	58.3
Pressure	0:43:00	437.9	Temperature	57.9
Pressure	0:44:00	437.3	Temperature	57.7
Pressure	0:45:00	436.7	Temperature	57.6
Pressure	0:46:00	436.6	Temperature	57.6
Pressure	0:47:00	436.3	Temperature	57.4
Pressure	0:48:00	435.8	Temperature	57
Pressure	0:49:00	435.1	Temperature	57
Pressure	0:50:00	435.2	Temperature	57.2
Pressure	0:51:00	435	Temperature	57
Pressure	0:52:00	434.6	Temperature	56.8
Pressure	0:53:00	434.2	Temperature	56.3
Pressure	0:54:00	433.9	Temperature	56.5
Pressure	0:55:00	433.5	Temperature	56.3
Pressure	0:56:00	433.7	Temperature	56.5
Pressure	0:57:00	433.5	Temperature	56.1
Pressure	0:58:00	433.4	Temperature	56.1
Pressure	0:59:00	433.4	Temperature	55.9
Pressure	1:00:00	433.4	Temperature	55.9
Pressure	1:01:00	433.7	Temperature	55.8
Pressure	1:02:00	433.7	Temperature	55.6
Pressure	1:03:00	434.2	Temperature	55.6
Pressure	1:04:00	434.5	Temperature	55.4
Pressure	1:05:00	434.2	Temperature	55.4
Pressure	1:06:00	434.4	Temperature	55.6
Pressure	1:07:00	434.2	Temperature	55.6
Pressure	1:08:00	434.2	Temperature	55.4
Pressure	1:09:00	434.1	Temperature	55.6
Pressure	1:10:00	434.4	Temperature	55.4
Pressure	1:11:00	434.3	Temperature	55.6
Pressure	1:12:00	434.2	Temperature	55.6
Pressure	1:13:00	434.3	Temperature	55.6
Pressure	1:14:00	434.4	Temperature	55.6
Pressure	1:15:00	202.5	Temperature	55.8
Pressure	1:16:00	69.7	Temperature	55.6
Pressure	1:17:00	6.2	Temperature	55.8
Pressure	1:18:00	-0.5	Temperature	56.1
Pressure	1:19:00	-0.5	Temperature	56.3

5Blue Job #: 5B108-80
Gauge: WIKA, CPG1000, 2220063, 4.04
Log Type: CONTINUOUS
Sample Type: INTERVAL END
Interval: 1 minute
Unit: PSI
Custom Factor: 1.000 / psi
Trip Setpoint: 0.0 PSI
Trip Reset: 0.0 PSI
Initial Zero: -0.3 PSI
Initial Tare: 0.0 PSI

			Min Temp	55.4
			Max Temp	61.3
	Time	PSI		°F
Pressure	0:01:00	86.3	Temperature	61.3
Pressure	0:02:00	88	Temperature	61.2
Pressure	0:03:00	88.5	Temperature	61.2
Pressure	0:04:00	88	Temperature	60.8
Pressure	0:05:00	441.9	Temperature	60.4
Pressure	0:06:00	440.4	Temperature	60.3
Pressure	0:07:00	439.4	Temperature	59.7
Pressure	0:08:00	421.9	Temperature	59.7
Pressure	0:09:00	458.1	Temperature	59.7
Pressure	0:10:00	456.8	Temperature	59.5
Pressure	0:11:00	437.1	Temperature	59.4
Pressure	0:12:00	436.5	Temperature	59.2
Pressure	0:13:00	436.3	Temperature	59.4
Pressure	0:14:00	436.5	Temperature	59.2
Pressure	0:15:00	436.5	Temperature	59
Pressure	0:16:00	436.3	Temperature	58.8
Pressure	0:17:00	436.4	Temperature	59
Pressure	0:18:00	436.6	Temperature	58.5
Pressure	0:19:00	437.4	Temperature	58.6
Pressure	0:20:00	437	Temperature	58.5
Pressure	0:21:00	437	Temperature	58.5
Pressure	0:22:00	437	Temperature	58.5
Pressure	0:23:00	437.4	Temperature	58.5
Pressure	0:24:00	437.2	Temperature	58.5
Pressure	0:25:00	437.3	Temperature	58.5
Pressure	0:26:00	437.5	Temperature	58.3
Pressure	0:27:00	437.8	Temperature	58.3
Pressure	0:28:00	437.7	Temperature	58.3
Pressure	0:29:00	437.7	Temperature	58.3
Pressure	0:30:00	437.7	Temperature	58.5
Pressure	0:31:00	437.8	Temperature	58.3
Pressure	0:32:00	438.1	Temperature	58.3
Pressure	0:33:00	438.3	Temperature	58.3
Pressure	0:34:00	438.2	Temperature	58.3

TARPON
ENERGY SERVICES LTD.

CALIBRATION REPORT

PREPARED FOR 5 BLUE

INSTRUMENT INFORMATION

MANUFACTURER: **WIKA**	MODEL NUMBER: **4" FACE ½ " NPT**
SERIAL NUMBER: **5B-B3**	WORK TICKET: **11470**
TYPE: **PRESSURE GAUGE**	RANGE: **0-1000 PSI**
CALIBRATION DATE: **12-Aug-2013**	CALIBRATION DUE DATE: **12-Aug-2014**

CALIBRATION DATA

TEST POINT	AS FOUND	AS LEFT
0%	--	0
20%	--	200
50%	--	500
80%	--	800
100%	--	1000

TEST EQUIPMENT USED

SERIAL NO.	MAKE	MODEL NO.	CALIBRATION DATE
TE-SHOP2	CRSYTAL	XP2I	9-Aug-2013

COMMENTS: The instrument was calibrated against laboratory standards that are either traceable to the National Institute of Standards and Technology, (NIST), National Research Council, (NRC), or are derived by approved ratio techniques.

CALIBRATION TECHNICIAN: **Justin Palermo**

TARPON ENERGY SERVICES LTD.

ISO 9001: 2008 Certified

Certificate of Calibration

For Instrument :	WIKA CPG1000-BES-AIZZM3-Z
Customer Name :	5BLUE PROCESS EQUIPMENT
Description :	DIGTAL TEST GAUGE
Asset Number :	5B-DG-3K
Serial Number :	2220063
Certificate # :	9781-1

TARPON ENERGY SERVICES LTD. Certifies that...

the above described instrument met or exceeded all published (OEM) specifications at the time of calibration specified below; and has been calibrated using standards whose accuracies are traceable to the National Institute of Standards and Technology (NIST) and or National Research Council (NRC), or have been derived from accepted values or physical constants, or have been derived by ratio or self calibration techniques.

CALIBRATION INFORMATION

Cal Date Time	10-May-2013 10:58:56	Temperature	23.00°C	Work Order #	9781
Next Cal Due	10-May-2014	Humidity	40 %		
Pass	Y	Tech	Chuck Hwang		
Seals OK	Y	Note	N/A		
Cal Procedure	WIKA DIGITAL TEST GAUGE 3000PSI: (1 YEAR) CAL VER			Revision	1.0

STANDARDS USED FOR CALIBRATION

Asset Number	Serial No.	Mfg	Model	Description	Cal. Date	Due Date
N-12	351	DH INST.	7202-M	Deadweight Base	10/9/2012	10/9/2013
N-14	592	DH INST.	PC-7300-2	Piston Cylinder	10/11/2012	10/11/2013
N-16	544	DH INST.	PG7000	Mass Carrying Bell	10/9/2012	10/9/2013
N-17	2199	DH INST.	MS-7002-35	35 kg Mass Set	10/10/2012	10/10/2013

Calibration Technician

Quality Assurance Approval

TARPON ENERGY SERVICES LTD.

ISO 9001: 2008 Certified

Calibration Results

For Instrument: WIKA CPG1000-BES-AIZZM3-Z
DIGTAL TEST GAUGE
Serial No: 2220063
Asset No. 5B-DG-3K
Cal. Date : 10-May-2013
Cal. Due Date : 10-May-2014
Customer : 5BLUE PROCESS EQUIPMENT

Notes: N/A

Result: PASS
Performed on: 5/10/2013 at 10:58:56
Performed by: Chuck Hwang
Environment: Temp. 23.0°C Humid. 40 %
Condition F/L: FOUND-LEFT
Certificate # : 9781-1
Work Order # : 9781

Standards Used

Asset Number	Serial No.	Mfg	Model	Description	Cal. Date	Due Date
N-12	351	DH INST.	7202-M	Deadweight Base	10/9/2012	10/9/2013
N-14	592	DH INST.	PC-7300-2	Piston Cylinder	10/11/2012	10/11/2013
N-16	544	DH INST.	PG7000	Mass Carrying Bell	10/9/2012	10/9/2013
N-17	2199	DH INST.	MS-7002-35	35 kg Mass Set	10/10/2012	10/10/2013

Test Results

Test Description	True Value	Test Result	Lower limit	Upper limit	% Tol	P / F
PRESSURE TESTS						
TEST POINT 0.0 psi		0.0	-1.5	1.5	0	P
TEST POINT 750.0 psi		749.6	748.5	751.5	26.7	P
TEST POINT 1500.0 psi		1499.6	1498.5	1501.5	26.7	P
TEST POINT 2250.0 psi		2249.5	2248.5	2251.5	33.3	P
TEST POINT 3000.0 psi		2999.3	2998.5	3001.5	46.7	P

End of Test Data

* AS FOUND/AS LEFT is not listed separately, this means that no adjustment has been made and AS FOUND = AS LEFT.
The ERROR % TOL field contains the error as a percentage of the tolerance, and gives a quick impression of how close the instrument is to the allowed tolerance
If there are any questions about tolerances, or the certificate please call (780)466-6000.

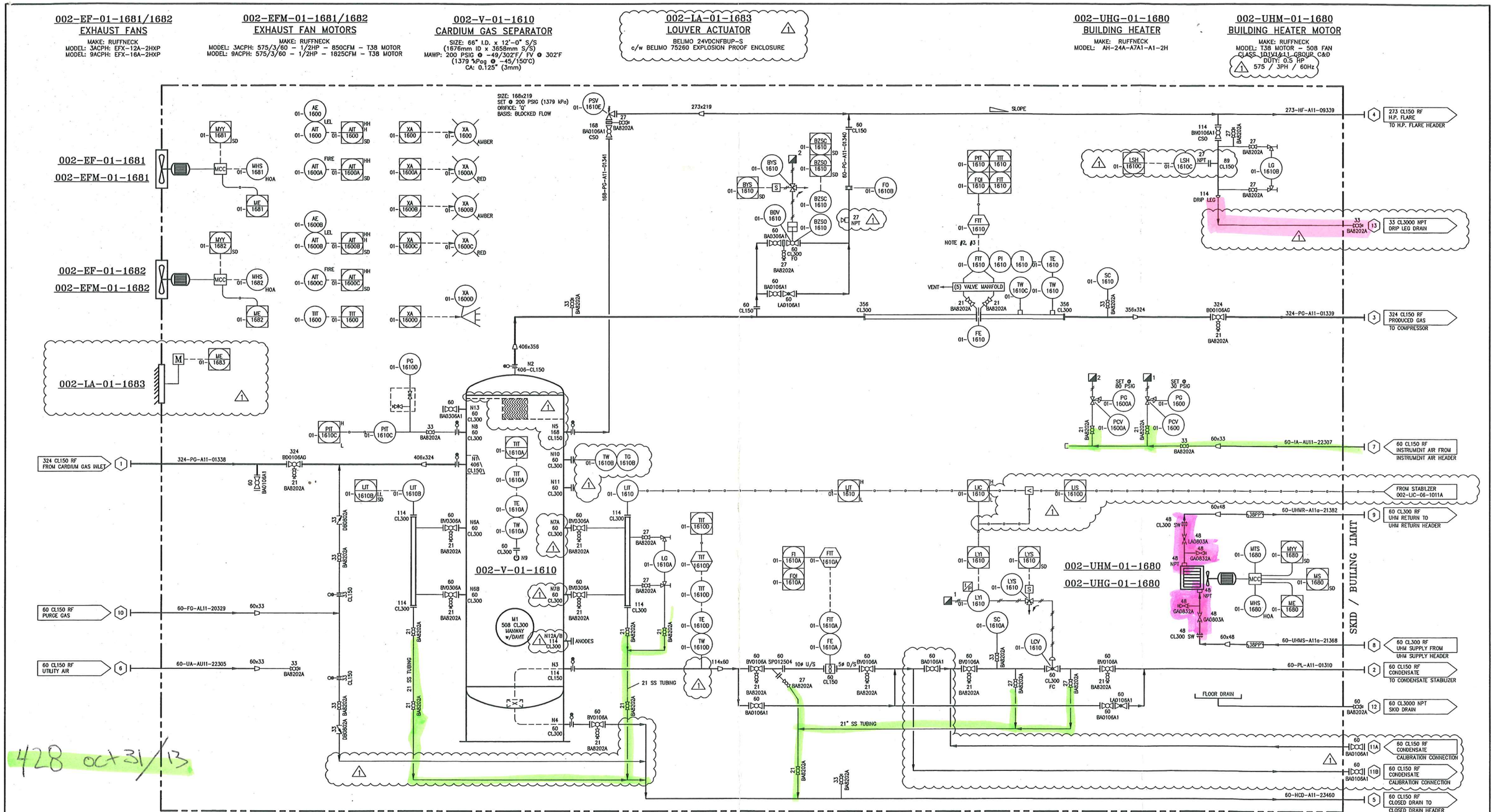

428 oct 31/13

428

1110

NOTES:

1. ALL INSTRUMENT TAGS SHALL READ AS FULL TAG NUMBER: 002-PIT-01-1610A FOR EXAMPLE
2. DELETED
3. DELETED
4. CALIBRATION CONNECTION SHALL BE PIPED TO THE SKID EDGE WITH VALVE OUTSIDE THE BUILDING.

NOTE:

- ALL TRANSMITTERS AND SWITCHES ARE WIRED TO SKID EDGE JUNCTION BOX BY 5BLUE
- REMOTE CONTROL AND MONITORING TO BE BY CUSTOMER
- CARDIUM GAS SEPARATOR BUILDING # 002-BU-01-1600

NO.	REVISION	BY	CHK	DATE
1	REVISED AS SHOWN	RR		17/09/13
0	ISSUED FOR CONSTRUCTION	BS		08/07/13
A	ISSUED FOR APPROVAL	BS		15/05/13

CUSTOMER REFERENCE: #407014-00120

5Blue Process Equipment Inc.

www.5Blue.com

CUSTOMER: DEVON NEC CORPORATION

JOB NO. 5B1108-02

PROJECT: FERRIER CENTRAL OIL BATTERY - LIQUID EXTRACTION PLANT (LEP)
LOCATION: LSD 11-02-039-08 W5M

TITLE: COMPRESSED CARDIUM GAS SEPARATOR PACKAGE (002-PK-01-1600) P&ID

DRAWN	CHK	APP	SCALE	DATE	DWG NO	SHT TTL
BS			NTS	09/05/13	5B1108-02-DR-00-001	001

5Blue
Process Equipment Inc.

JOB NUMBER: SB1108-20

TEST DATE: 10 Sept 2013

DESCRIPTION: Compressed caesium

HYDROTEST PROCEDURE / REPORT

DESIGN PRESSURE: 200 PSI

TEST PRESSURE: 260 PSI

DESIGN TEMPERATURE: 302°F

TEST TEMPERATURE: 20°C/STOP

MINIMUM HOLD TIME: 1 hour

RECORDER REQUIRED: ☑ YES ☐ NO

START TIME: 9:15 AM

END TIME: 11:00 AM

PREPARED BY: Chris Michal Kow

ADDITIONAL INFORMATION:

Test medium used: Water

Drawing No: SB1108-02-DR-20-001

Gauge #1: SB-B4

Gauge #2: SB-DG-3K

Chart Recorder #: SB-DG-8K

TEST RESULTS:

- Acceptable; no leaks detected.

ACCEPTANCE

QUALITY CONTROL INSPECTOR: Joelle Deer Print: Joelle Deer-B

CUSTOMER REPRESENTATIVE: Print: Dan De Groot

AUTHORIZED INSPECTOR: M. Parker Print: Monica Parker

COMMENTS: vessel hydro-tested in the vertical position.

5Blue
Process Equipment Inc.

Hydrotest: Job # 5B1108-20
Date: 10-Sep-13
Client: Devon
Dwg #s : 5B1108-02-DR-20-001
Items: Compressed Cardium Gas Separator (002-V-01-1610)
Comments: This vessel was tested in the horizontal position

Test Paramenters
Test Pressure : 260 PSI
Duration: 1 hour (minimum)
Medium: Water

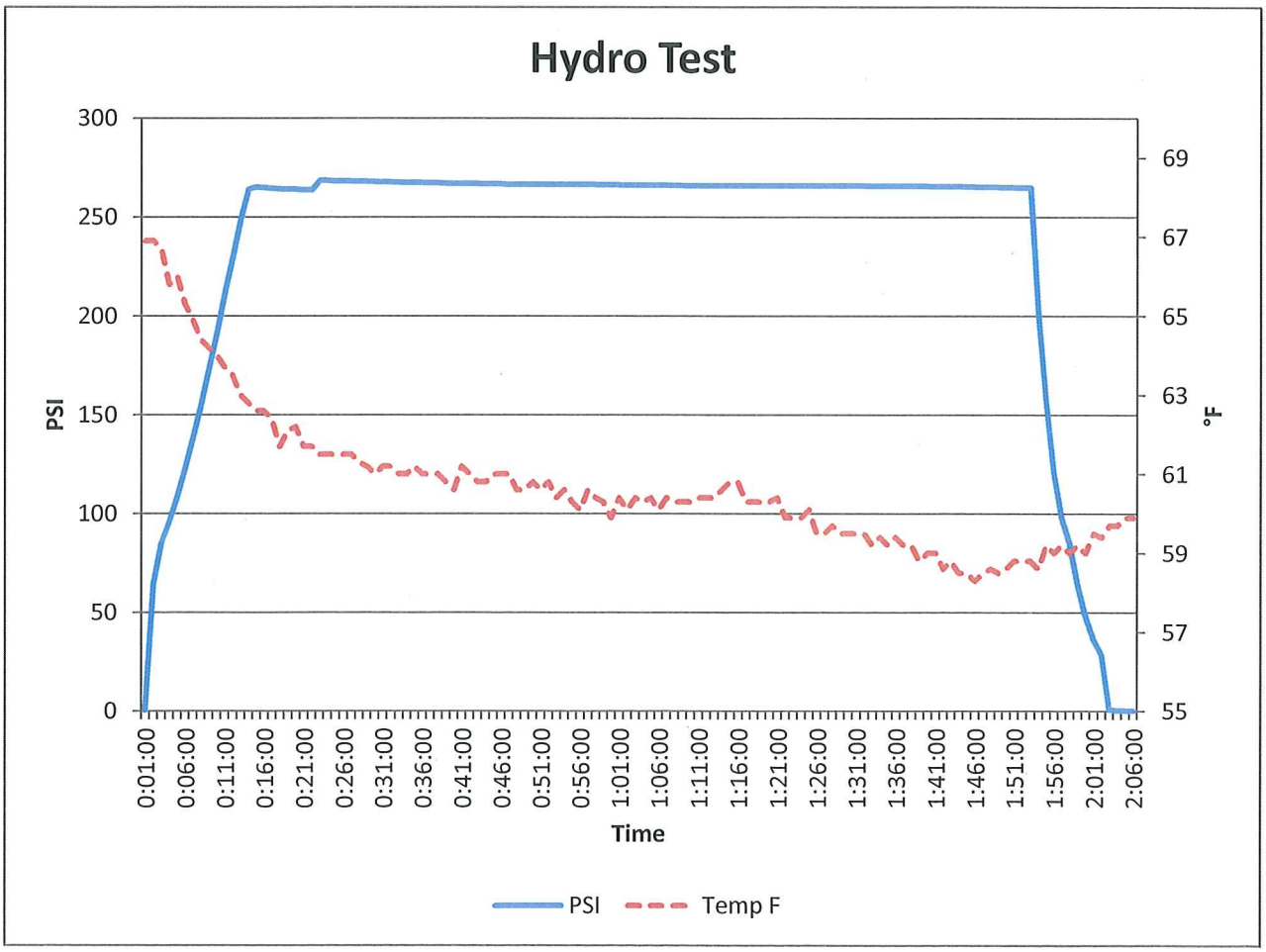

5Blue Job #: 5B1108-20 (vessel)
Gauge: WIKA, CPG1000, 2220063, 4.04
Log Type: CONTINUOUS
Sample Type: INTERVAL END
Interval: 1 minute
Unit: PSI
Custom Factor: 1.000 / psi
Trip Setpoint: 0.0 PSI
Trip Reset: 0.0 PSI
Initial Zero: -0.4 PSI
Initial Tare: 0.0 PSI

			Min Temp	58.3
			Max Temp	66.9
	Time	PSI		°F
Pressure	0:01:00	0.4	Temperature	66.9
Pressure	0:02:00	64.4	Temperature	66.9
Pressure	0:03:00	85.2	Temperature	66.7
Pressure	0:04:00	96.1	Temperature	65.8
Pressure	0:05:00	108.6	Temperature	66
Pressure	0:06:00	123	Temperature	65.3
Pressure	0:07:00	138.5	Temperature	64.9
Pressure	0:08:00	154.9	Temperature	64.4
Pressure	0:09:00	173.2	Temperature	64.2
Pressure	0:10:00	191.1	Temperature	64
Pressure	0:11:00	211.4	Temperature	63.7
Pressure	0:12:00	229.7	Temperature	63.5
Pressure	0:13:00	248.9	Temperature	63
Pressure	0:14:00	264.1	Temperature	62.8
Pressure	0:15:00	265.2	Temperature	62.6
Pressure	0:16:00	264.9	Temperature	62.6
Pressure	0:17:00	264.5	Temperature	62.4
Pressure	0:18:00	264.3	Temperature	61.7
Pressure	0:19:00	264	Temperature	62.1
Pressure	0:20:00	264	Temperature	62.2
Pressure	0:21:00	263.8	Temperature	61.7
Pressure	0:22:00	263.7	Temperature	61.7
Pressure	0:23:00	268.5	Temperature	61.5
Pressure	0:24:00	268.5	Temperature	61.5
Pressure	0:25:00	268.3	Temperature	61.5
Pressure	0:26:00	268.3	Temperature	61.5
Pressure	0:27:00	268.2	Temperature	61.5
Pressure	0:28:00	268.1	Temperature	61.3
Pressure	0:29:00	268	Temperature	61.2
Pressure	0:30:00	267.9	Temperature	61
Pressure	0:31:00	267.7	Temperature	61.2
Pressure	0:32:00	267.7	Temperature	61.2
Pressure	0:33:00	267.6	Temperature	61
Pressure	0:34:00	267.5	Temperature	61

	Time	PSI		°F
Pressure	0:35:00	267.5	Temperature	61.2
Pressure	0:36:00	267.4	Temperature	61
Pressure	0:37:00	267.3	Temperature	61
Pressure	0:38:00	267.2	Temperature	61
Pressure	0:39:00	267.1	Temperature	60.8
Pressure	0:40:00	267	Temperature	60.6
Pressure	0:41:00	267	Temperature	61.2
Pressure	0:42:00	267	Temperature	61
Pressure	0:43:00	266.9	Temperature	60.8
Pressure	0:44:00	266.8	Temperature	60.8
Pressure	0:45:00	266.8	Temperature	61
Pressure	0:46:00	266.8	Temperature	61
Pressure	0:47:00	266.5	Temperature	61
Pressure	0:48:00	266.5	Temperature	60.6
Pressure	0:49:00	266.5	Temperature	60.6
Pressure	0:50:00	266.4	Temperature	60.8
Pressure	0:51:00	266.4	Temperature	60.6
Pressure	0:52:00	266.4	Temperature	60.8
Pressure	0:53:00	266.4	Temperature	60.4
Pressure	0:54:00	266.4	Temperature	60.6
Pressure	0:55:00	266.5	Temperature	60.3
Pressure	0:56:00	266.4	Temperature	60.1
Pressure	0:57:00	266.4	Temperature	60.6
Pressure	0:58:00	266.4	Temperature	60.4
Pressure	0:59:00	266.3	Temperature	60.3
Pressure	1:00:00	266.3	Temperature	59.9
Pressure	1:01:00	266.3	Temperature	60.4
Pressure	1:02:00	266.2	Temperature	60.1
Pressure	1:03:00	266.2	Temperature	60.4
Pressure	1:04:00	266.2	Temperature	60.3
Pressure	1:05:00	266.1	Temperature	60.4
Pressure	1:06:00	266.1	Temperature	60.1
Pressure	1:07:00	266.1	Temperature	60.4
Pressure	1:08:00	266	Temperature	60.3
Pressure	1:09:00	266	Temperature	60.3
Pressure	1:10:00	265.9	Temperature	60.3
Pressure	1:11:00	265.9	Temperature	60.4
Pressure	1:12:00	265.9	Temperature	60.4
Pressure	1:13:00	265.9	Temperature	60.4
Pressure	1:14:00	265.9	Temperature	60.6
Pressure	1:15:00	265.9	Temperature	60.8
Pressure	1:16:00	265.9	Temperature	60.8
Pressure	1:17:00	265.9	Temperature	60.3
Pressure	1:18:00	265.8	Temperature	60.3
Pressure	1:19:00	265.9	Temperature	60.3
Pressure	1:20:00	266	Temperature	60.3

	Time	PSI		°F
Pressure	1:21:00	265.9	Temperature	60.4
Pressure	1:22:00	266	Temperature	59.9
Pressure	1:23:00	265.9	Temperature	59.9
Pressure	1:24:00	266	Temperature	59.9
Pressure	1:25:00	265.9	Temperature	60.1
Pressure	1:26:00	265.8	Temperature	59.5
Pressure	1:27:00	265.9	Temperature	59.5
Pressure	1:28:00	265.8	Temperature	59.7
Pressure	1:29:00	265.8	Temperature	59.5
Pressure	1:30:00	265.8	Temperature	59.5
Pressure	1:31:00	265.8	Temperature	59.5
Pressure	1:32:00	265.8	Temperature	59.5
Pressure	1:33:00	265.7	Temperature	59.2
Pressure	1:34:00	265.7	Temperature	59.4
Pressure	1:35:00	265.8	Temperature	59.2
Pressure	1:36:00	265.6	Temperature	59.4
Pressure	1:37:00	265.6	Temperature	59.2
Pressure	1:38:00	265.7	Temperature	59.2
Pressure	1:39:00	265.7	Temperature	58.8
Pressure	1:40:00	265.6	Temperature	59
Pressure	1:41:00	265.5	Temperature	59
Pressure	1:42:00	265.6	Temperature	58.6
Pressure	1:43:00	265.5	Temperature	58.8
Pressure	1:44:00	265.6	Temperature	58.5
Pressure	1:45:00	265.4	Temperature	58.5
Pressure	1:46:00	265.4	Temperature	58.3
Pressure	1:47:00	265.2	Temperature	58.5
Pressure	1:48:00	265.3	Temperature	58.6
Pressure	1:49:00	265.2	Temperature	58.5
Pressure	1:50:00	265	Temperature	58.6
Pressure	1:51:00	265.1	Temperature	58.8
Pressure	1:52:00	264.9	Temperature	58.8
Pressure	1:53:00	264.9	Temperature	58.8
Pressure	1:54:00	200.3	Temperature	58.6
Pressure	1:55:00	156.5	Temperature	59.2
Pressure	1:56:00	120.9	Temperature	59
Pressure	1:57:00	98.1	Temperature	59.2
Pressure	1:58:00	85.3	Temperature	59
Pressure	1:59:00	64.7	Temperature	59.2
Pressure	2:00:00	48.3	Temperature	59
Pressure	2:01:00	36.1	Temperature	59.5
Pressure	2:02:00	28.4	Temperature	59.4
Pressure	2:03:00	0.9	Temperature	59.7
Pressure	2:04:00	0.3	Temperature	59.7
Pressure	2:05:00	0.2	Temperature	59.9
Pressure	2:06:00	0.1	Temperature	59.9

TARPON ENERGY SERVICES LTD.

ISO 9001: 2008 Certified

Certificate of Calibration

For Instrument :	WIKA CPG1000-BES-AIZZM3-Z
Customer Name :	5BLUE PROCESS EQUIPMENT
Description :	DIGTAL TEST GAUGE
Asset Number :	5B-DG-3K
Serial Number :	2220063
Certificate # :	9781-1

TARPON ENERGY SERVICES LTD. Certifies that...

the above described instrument met or exceeded all published (OEM) specifications at the time of calibration specified below; and has been calibrated using standards whose accuracies are traceable to the National Institute of Standards and Technology (NIST) and or National Research Council (NRC), or have been derived from accepted values or physical constants, or have been derived by ratio or self calibration techniques.

CALIBRATION INFORMATION

Cal Date Time	10-May-2013 10:58:56	Temperature	23.00°C	Work Order #	9781
Next Cal Due	10-May-2014	Humidity	40 %		
Pass	Y	Tech	Chuck Hwang		
Seals OK	Y	Note	N/A		
Cal Procedure	WIKA DIGITAL TEST GAUGE 3000PSI: (1 YEAR) CAL VER			Revision	1.0

STANDARDS USED FOR CALIBRATION

Asset Number	Serial No.	Mfg	Model	Description	Cal. Date	Due Date
N-12	351	DH INST.	7202-M	Deadweight Base	10/9/2012	10/9/2013
N-14	592	DH INST.	PC-7300-2	Piston Cylinder	10/11/2012	10/11/2013
N-16	544	DH INST.	PG7000	Mass Carrying Bell	10/9/2012	10/9/2013
N-17	2199	DH INST.	MS-7002-35	35 kg Mass Set	10/10/2012	10/10/2013

Calibration Technician

Quality Assurance Approval

Tarpon Energy Services Ltd., 1409 6Street, Nisku, AB. T9E7M7,

TARPON ENERGY SERVICES LTD.

ISO 9001: 2008 Certified

Calibration Results

For Instrument : WIKA CPG1000-BES-AIZZM3-Z
DIGTAL TEST GAUGE
Serial No: 2220063
Asset No. 5B-DG-3K
Cal. Date : 10-May-2013
Cal. Due Date : 10-May-2014
Customer : 5BLUE PROCESS EQUIPMENT

Notes: N/A

Result: PASS
Performed on: 5/10/2013 at 10:58:56
Performed by: Chuck Hwang
Environment: Temp. 23.0°C Humid. 40 %
Condition F/L: FOUND-LEFT
Certificate # : 9781-1
Work Order # : 9781

Standards Used

Asset Number	Serial No.	Mfg	Model	Description	Cal. Date	Due Date
N-12	351	DH INST.	7202-M	Deadweight Base	10/9/2012	10/9/2013
N-14	592	DH INST.	PC-7300-2	Piston Cylinder	10/11/2012	10/11/2013
N-16	544	DH INST.	PG7000	Mass Carrying Bell	10/9/2012	10/9/2013
N-17	2199	DH INST.	MS-7002-35	35 kg Mass Set	10/10/2012	10/10/2013

Test Results

Test Description	True Value	Test Result	Lower limit	Upper limit	% Tol	P / F
PRESSURE TESTS						
TEST POINT 0.0 psi		0.0	-1.5	1.5	0	P
TEST POINT 750.0 psi		749.6	748.5	751.5	26.7	P
TEST POINT 1500.0 psi		1499.6	1498.5	1501.5	26.7	P
TEST POINT 2250.0 psi		2249.5	2248.5	2251.5	33.3	P
TEST POINT 3000.0 psi		2999.3	2998.5	3001.5	46.7	P

End of Test Data

- If AS FOUND/AS LEFT is not listed separately, this means that no adjustment has been made and AS FOUND = AS LEFT.
- The ERROR % TOL field contains the error as a percentage of the tolerance, and gives a quick impression of how close the instrument is to the allowed tolerance

If there are any questions about tolerances, or the certificate please call (780)466-6000.

TARPON ENERGY SERVICES LTD.

CALIBRATION REPORT

PREPARED FOR 5 BLUE

INSTRUMENT INFORMATION

MANUFACTURER: **WIKA**	MODEL NUMBER: **4½" FACE ½ " NPT**
SERIAL NUMBER: **5B-B4**	WORK TICKET: **2192**
TYPE: **PRESSURE GAUGE**	RANGE: **0-1000 PSI**
CALIBRATION DATE: **2-APRIL-2013**	CALIBRATION DUE DATE: **2-APRIL-2014**

CALIBRATION DATA

TEST POINT	AS FOUND	AS LEFT
0%	0	0
20%	200	200
50%	500	500
80%	800	800
100%	1000	1000

TEST EQUIPMENT USED

SERIAL NO.	MAKE	MODEL NO.	CALIBRATION DATE
TE-SHOP1	CRYSTAL	XP2I	11-FEB-2013

COMMENTS: The instrument was calibrated against laboratory standards that are either traceable to the National Institute of Standards and Technology, (NIST), National Research Council, (NRC), or are derived by approved ratio techniques.

CALIBRATION TECHNICIAN: **Brad Kaplan**



B2 Hydro-test Chart

2303-8th Street, Nisku Alberta, T9E-7Z3 CANADA

5Blue
Process Equipment Inc.

See section B1



B3 PWHT Certificate

2303-8th Street, Nisku Alberta, T9E-7Z3 CANADA

This section does not apply

B4 PWHT Records & Charts

2303-8th Street, Nisku Alberta, T9E-7Z3 CANADA

This section does not apply

B5 Radiography Reports

2303-8th Street, Nisku Alberta, T9E-7Z3 CANADA

ALL CAN INSPECTION SERVICES (2011) INC.

Report # C7079

9323-37 Avenue, NW, Edmonton, Albert T6E 5N4
SHOP # 780-462-1072, **OFFICE #** 780-462-9797, **FAX #** 780-462-4664
EMAIL: shop@allcaninspection.com

Client:	**5Blue Process**	Client Job #	**5B1108-80**
Address:	2303-8th St., Nisku, AB., T9E 7Z3	P.O. #	
Contact: Name:	Joelle Dery-Brochu	Date:	**Dec. 13/13**
Phone:	780-955-2040 **Ext:** 241		
Work Location:	Fab Shop Nisku	Work Description:	

CODES
1. ASME B31.3 N/C
2. ASME B31.3 S/C
3. ASME Sec. VIII Div 1 UW51
4. ASME Sec. VIII Div. 1 UW52
5. CSA Z662
6. CSA Z662 (Sour)
7. API 650
8. CWB

NDE No:	Size & thickness Plus Code Max. reinforcement	Material	Code	IQI	Technique Number	Source Side of Object to Film Distance	Source to Object Distance	Number of Exposures	Welder ID	LF - Lack of Fusion; IP - Incomplete Penetration; IC - Internal Concavity; BT - Burn Through; TI - Tungsten Inclusion; IU: Internal Undercut; EU: External Undercut; EP - Excessive Penetration; P - Porosity; S - Slag; HL - High-Low; C - Crack; AB - Arc Burn; HB - Hollow Bead. **Severity:** 1 = Slight, 2 = Medium, 3 = Severe (Reject) — Discontinuity	Severity	Accept	Reject
			1-8	See Back	See Back	Inches	Inches				1-3		
16A-3	G 1/2"	P1	1	N/A	RT-9	0.965	10.000	1	O	4 mm		√	
16A-4	G 1/2"	P1	1	N/A	RT-9	0.965	10.000	1	O	4 mm		√	

RT Technician:	Gordon Thomas	CGSB Level:	II	Reg. #:	6	SNT-TC-1A Level:	III	SNT-TC-1A No:	6
RT Assistant # 1	Ken Brunlees	CEDO #:	15425			SNT-TC-1A Level:	II	SNT-TC-1A No:	15425
RT Assistant # 2		CEDO #:				SNT-TC-1A Level:		SNT-TC-1A No:	

Technician Signature — Dec. 13/13 Date

JOELLE DERY-BROCHU
Client Representative Signature

QUALITY CONTROL
(780)955-2040 E 241

DEC 16 2013
Evaluation Date

The above interpretation is a technical opinion, not a guarantee.
Client signature indicates acceptance of the report and results.

Clock tape marker and start arrow marked on weldment.
It is the customer's responsibility to map welds on drawings.

Film Make / Brand	AGFA	Film Class - Type:	1-D4/D5
Screens Lead	Front 0.010	Back 0.010	One (no.) film per screen
Film Density:	Min. 2.0	Max. 4.0	
Penetrometer (IQI hole type) designation:	N/A	Recommended Max. U.G.:	0.20
Source Isotope:	IRIDIUM-192(Gamma)	Wall Viewing:	Single
Effective Focal Spot Size:	0.118 inches	Processing:	Automatic

RADIOGRAPHIC EXAMINATION REPORT

RADIOGRAPHIC EXAMINATION TECHNIQUE REFERENCE SHEET

ALL CAN INSPECTION SERVICES (2011) INC. RT TECHNIQUES
ALL CAN INSPECTION SERVICES (2011) INC. GENERAL RT PROCEDURE
Important Note: Always check the QA/Procedures Manual for the most current Procedure Revision status.

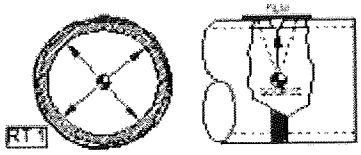

Tech #RT-1: Vessel Circumferential Weld
1 Exposure: QA Subsection 15.12.1

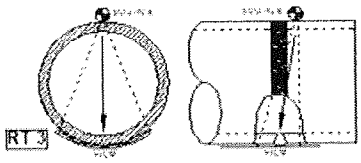

Tech #RT-3: Circ. Weld – Contact – Light Wall
3 Exposures@120° Spacing: QA Subsection 15.12.6

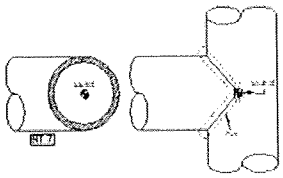

Tech #RT-7: Mitered "T" Joint - Single Wall - Source centered
Exposures as required: *QA Subsection 15.12.11*

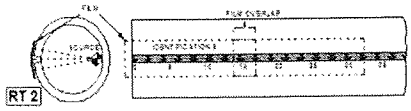

Tech #RT-2: Long. Weld - Light Wall – Source Inside
1 Exposure/15 inches: *QA Subsection 15.12.2*

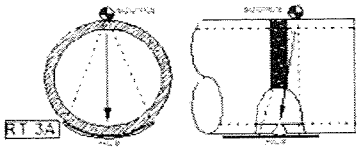

Tech #RT-3A: Circ. Weld – Contact – Heavy Wall
4 Exposures@90° Spacing: *QA Subsection 15.12.7*

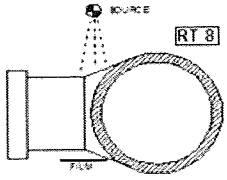

Tech #RT-8:Category "D" Weld
Exposures as required: *QA Subsection 15.12.12*

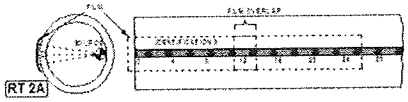

Tech #RT-2A: Long. Weld - Heavy Wall – Source Inside
1 Exposure/12 inches: *QA Subsection 15.12.3*

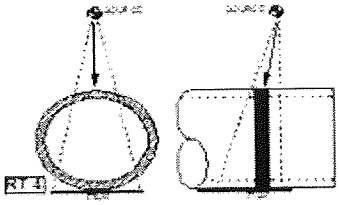

Tech #RT-4: Circ. Weld – Dbl Wall – Elipse
2 Exposures@90° Spacing: QA Subsection 15.12.8

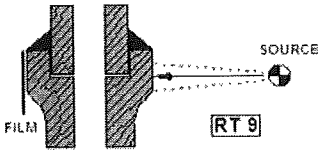

Tech #RT-9: Gap Check
1 Exposure: *QA Subsection 15.12.13*

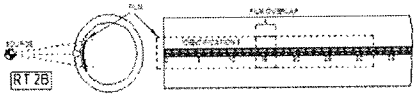

Tech #RT-2B: Long. Weld – Light Wall – Source Outside
1 Exposure/15 inches: *QA Subsection 15.12.4*

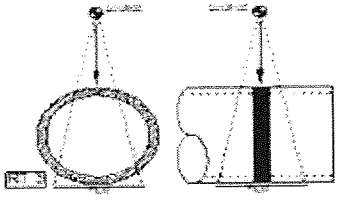

Tech #RT-5: Circ. Weld – Double Wall – Superimposed
3 Exposures@60° Spacing: QA Subsection 15.12.9

Penetrameter (IQI) Reference

1. ASTM A
2. ASTM B
3. ASTM C
4. FEEN/EN-462

5. DIN/EN-462 Set/Size 1 (Wire range 1 - 7)
6. DIN/EN 462 Set/Size 6 (Wire range 6 - 12)
7. DIN/EN-462 Set/Size 10 (Wire range 10 - 16)
8. DIN/EN-462 Set/Size 13 (Wire range 13 - 19)

9. Hole Type: Indicate IQI Designation Number

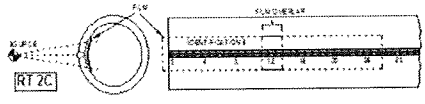

Tech #RT-2C: Long. Weld – Heavy Wall – Source Outside
1 Exposure/12 inches: *QA Subsection 15.12.5*

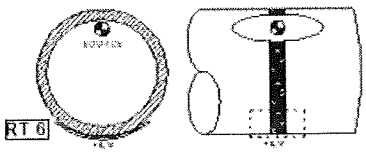

Tech #RT-6: Circumferential Weld - Source not Centered
Exposures as required: *QA Subsection 15.12.10*

COMMENTS

ALL CAN INSPECTION SERVICES (2011) INC.

Report # C6035

9323-37 Avenue, NW, Edmonton, Albert T6E 5N4
SHOP # 780-462-1072, **OFFICE #** 780-462-9797, **FAX #** 780-462-4664
EMAIL: shop@allcaninspection.com

Client:	**5BLUE PROCESS**		Client Job #	**5B1108-80**	
Address:	Nisku		P.O. #		
Contact:	Name:	Andrew Ngo/Joelle Dery-Brochu	Date:	**Oct.18/13**	
	Phone:	780-955-2040 **Ext:** 227/241			
Work Location:	Fab Shop Nisku		Work Description:		

CODES
1. ASME B31.3 N/C
2. ASME B31.3 S/C
3. ASME Sec. VIII Div 1 UW51
4. ASME Sec. VIII Div. 1 UW52
5. CSA Z662
6. CSA Z662 (Sour)
7. API 650
8. Shot to Z662,Interp. B31.3N

NDE No:	Size & thickness Plus Code Max. reinforcement	Material	Code	IQI	Technique Number	Source Side of Object to Film Distance	Source to Object Distance	Number of Exposures	Welder ID	Discontinuity	Severity	Accept	Reject
			1 - 8	See Back	See Back	Inches	Inches				1 - 3		
6B-7	4" STD	P1	1	4	RT-3	0.237	4.763	3	H			√	

LF - Lack of Fusion; IP - Incomplete Penetration; IC - Internal Concavity; BT - Burn Through; TI - Tungsten Inclusion; IU: Internal Undercut; EU: External Undercut; EP - Excessive Penetration; P - Porosity; S - Slag; HL - High-Low; C - Crack; AB - Arc Burn; HB - Hollow Bead

Severity: 1 = Slight, 2 = Medium, 3 = Severe (Reject)

RT Technician:	Gordon Thomas	CGSB Level:	II	Reg. # :	6	SNT-TC-1A Level: III	SNT-TC-1A No: 6
RT Assistant # 1	Shannon Berg	CEDO #:	17583			SNT-TC-1A Level: II	SNT-TC-1A No: 17583
RT Assistant # 2	Craig Anderson	CEDO #:	Trainee			SNT-TC-1A Level: -	SNT-TC-1A No: Trainee

Technician Signature

ANDREW NGO
QUALITY CONTROL
TEL: 780-955-2040

Client Representative Signature

Oct.18/13
Date OCT 18 2013
Evaluation Date

The above interpretation is a technical opinion, not a guarantee.
Client signature indicates acceptance of the report and results.

Clock tape marker and start arrow marked on weldment.
It is the customer's responsibility to map welds on drawings.

Film Make / Brand	AGFA	Film Class / Type:	1-D4/D5
Screens Lead	Front 0.010	Back 0.010	One (no.) film per screen
Film Density:	Min. 2.0	Max. 4.0	
Penetrometer (IQI hole type) designation:	N/A	Recommended Max. U.G.:	0.20
Source Isotope:	IRIDIUM-192(Gamma)	Wall Viewing:	Single
Effective Focal Spot Size:	0.118 inches	Processing:	Automatic

RADIOGRAPHIC EXAMINATION REPORT

RADIOGRAPHIC EXAMINATION TECHNIQUE REFERENCE SHEET

ALL CAN INSPECTION SERVICES (2011) INC. RT TECHNIQUES
ALL CAN INSPECTION SERVICES (2011) INC. GENERAL RT PROCEDURE
Important Note: Always check the QA/Procedures Manual for the most current Procedure Revision status.

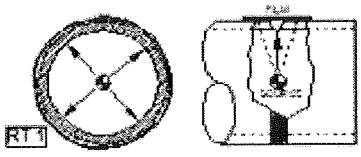

Tech #RT-1: Vessel Circumferential Weld
1 Exposure: QA Subsection 15.12.1

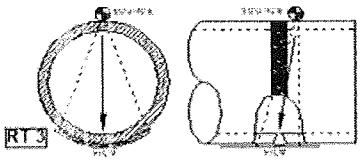

Tech #RT-3: Circ. Weld – Contact – Light Wall
3 Exposures@120° Spacing: QA Subsection 15.12.6

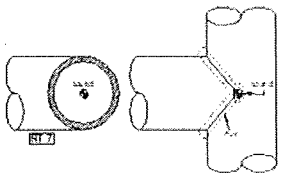

Tech #RT-7: Mitered "T" Joint - Single Wall - Source centered
Exposures as required: *QA Subsection 15.12.11*

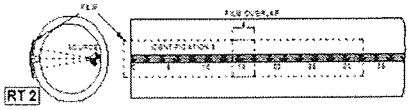

Tech #RT-2: Long. Weld - Light Wall – Source Inside
1 Exposure/15 inches: *QA Subsection 15.12.2*

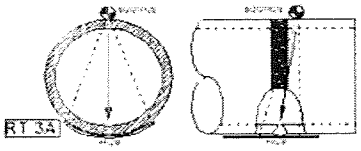

Tech #RT-3A: Circ. Weld – Contact – Heavy Wall
4 Exposures@90° Spacing: *QA Subsection 15.12.7*

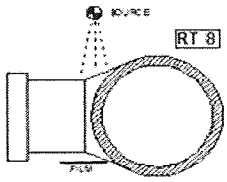

Tech #RT-8:Category "D" Weld
Exposures as required: *QA Subsection 15.12.12*

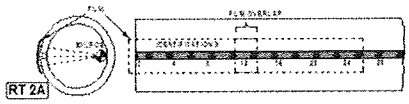

Tech #RT-2A: Long. Weld - Heavy Wall – Source Inside
1 Exposure/12 inches: *QA Subsection 15.12.3*

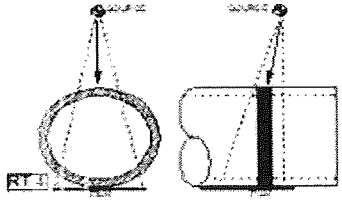

Tech #RT-4: Circ. Weld – Dbl Wall – Ellipse
2 Exposures@90° Spacing: QA Subsection 15.12.8

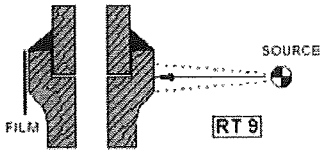

Tech #RT-9: Gap Check
1 Exposure: *QA Subsection 15.12.13*

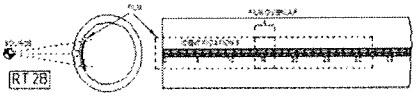

Tech #RT-2B: Long. Weld – Light Wall – Source Outside
1 Exposure/15 inches: *QA Subsection 15.12.4*

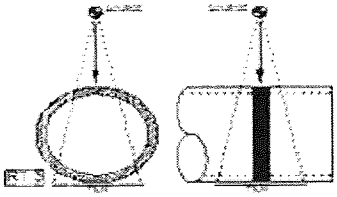

Tech #RT-5: Circ. Weld – Double Wall – Superimposed
3 Exposures@60° Spacing: QA Subsection 15.12.9

Penetrameter (IQI) Reference

1. ASTM A
2. ASTM B
3. ASTM C
4. FEEN/EN-462

5. DIN/EN-462 Set/Size 1 (Wire range 1 - 7)
6. DIN/EN 462 Set/Size 6 (Wire range 6 - 12)
7. DIN/EN-462 Set/Size 10 (Wire range 10 - 16)
8. DIN/EN-462 Set/Size 13 (Wire range 13 - 19)

9. Hole Type: Indicate IQI Designation Number

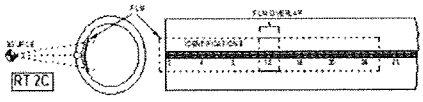

Tech #RT-2C: Long. Weld – Heavy Wall – Source Outside
1 Exposure/12 inches: *QA Subsection 15.12.5*

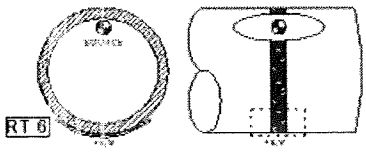

Tech #RT-6: Circumferential Weld - Source not Centered
Exposures as required: *QA Subsection 15.12.10*

COMMENTS

ALL CAN INSPECTION SERVICES (2011) INC.

Report # C5886

9323-37 Avenue, NW, Edmonton, Albert T6E 5N4
SHOP # 780-462-1072, **OFFICE #** 780-462-9797, **FAX #** 780-462-4664
EMAIL: shop@allcaninspection.com

Client:	**5Blue Process**	**Client Job #**	**5B1108-80**
Address:	2303-8th St., Nisku, AB., T9E 7Z3	**P.O. #**	
Contact: Name:	Joelle Dery-Brochu/ Andrew Ngo	**Date:**	**Oct. 10/13**
Phone:	780-955-2040 **Ext:** 241/227		
Work Location:	Fab Shop Nisku	**Work Description:**	Devon

CODES
1. ASME B31.3 N/C
2. ASME B31.3 S/C
3. ASME Sec. VIII Div 1 UW51
4. ASME Sec. VIII Div. 1 UW52
5. CSA Z662
6. CSA Z662 (Sour)
7. API 650
8. CWB

NDE No:	Size & thickness Plus Code Max. reinforcement	Material	Code	IQI	Technique Number	Source Side of Object to Film Distance	Source to Object Distance	Number of Exposures	Welder ID	Discontinuity	Severity	Accept	Reject
			1 - 8	See Back	See Back	Inches	Inches			LF - Lack of Fusion; IP - Incomplete Penetration; IC - Internal Concavity; BT - Burn Through; TI - Tungsten Inclusion; IU: Internal Undercut; EU: External Undercut; EP - Excessive Penetration; P - Porosity; S - Slag; HL - High-Low; C - Crack; AB - Arc Burn; HB - Hollow Bead. **Severity:** 1 = Slight, 2 = Medium, 3 = Severe (Reject)	1 - 3		
14A-1	2" s80	P1	1	4	RT-3	0.343	2.282	3	B			√	

RT Technician:	Gordon Thomas	CGSB Level: II	Reg. # : 6	SNT-TC-1A Level: III	SNT-TC-1A No: 6
RT Assistant # 1	Jasdeep Singh	CEDO #:	17879	SNT-TC-1A Level: II	SNT-TC-1A No: 17879
RT Assistant # 2	Laurent Richer	CEDO #:	Trainee	SNT-TC-1A Level: -	SNT-TC-1A No: Trainee

Technician Signature — Oct. 10/13 Date

ANDREW NGO
QUALITY CONTROL
TEL:780-955-2040
Client Representative Signature

OCT 10 2013
Evaluation Date

The above interpretation is a technical opinion, not a guarantee.
Client signature indicates acceptance of the report and results.

Clock tape marker and start arrow marked on weldment.
It is the customer's responsibility to map welds on drawings.

Film Make / Brand	AGFA	Film Class - Type:	1-D4/D5
Screens Lead	Front 0.010	Back 0.010	One (no.) film per screen
Film Density:	Min. 2.0	Max. 4.0	
Penetrometer (IQI hole type) designation:	N/A	Recommended Max. U.G.:	0.20
Source Isotope:	IRIDIUM-192(Gamma)	Wall Viewing:	Single
Effective Focal Spot Size:	0.118 inches	Processing:	Automatic

RADIOGRAPHIC EXAMINATION REPORT

RADIOGRAPHIC EXAMINATION TECHNIQUE REFERENCE SHEET

ALL CAN INSPECTION SERVICES (2011) INC. RT TECHNIQUES
ALL CAN INSPECTION SERVICES (2011) INC. GENERAL RT PROCEDURE
Important Note: Always check the QA/Procedures Manual for the most current Procedure Revision status.

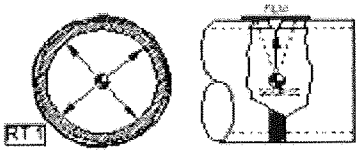

Tech #RT-1: Vessel Circumferential Weld
1 Exposure: QA Subsection 15.12.1

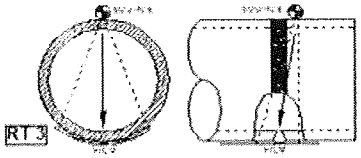

Tech #RT-3: Circ. Weld – Contact – Light Wall
3 Exposures@120° Spacing: QA Subsection 15.12.6

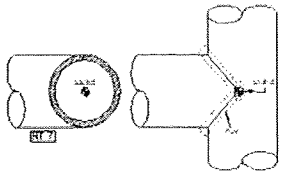

Tech #RT-7: Mitered "T" Joint - Single Wall - Source centered
Exposures as required: *QA Subsection 15.12.11*

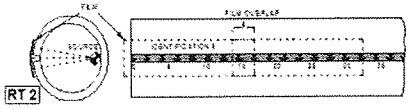

Tech #RT-2: Long. Weld - Light Wall – Source Inside
1 Exposure/15 inches: *QA Subsection 15.12.2*

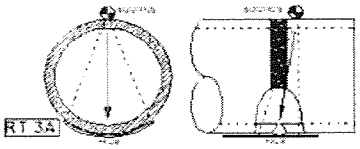

Tech #RT-3A: Circ. Weld – Contact – Heavy Wall
4 Exposures@90° Spacing: *QA Subsection 15.12.7*

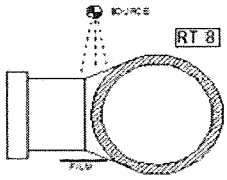

Tech #RT-8:Category "D" Weld
Exposures as required: *QA Subsection 15.12.12*

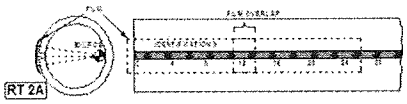

Tech #RT-2A: Long. Weld - Heavy Wall – Source Inside
1 Exposure/12 inches: *QA Subsection 15.12.3*

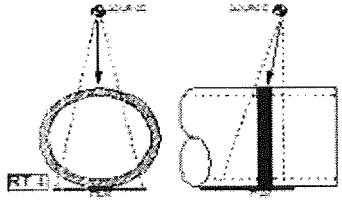

Tech #RT-4: Circ. Weld – Dbl Wall – Elipse
2 Exposures@90° Spacing: QA Subsection 15.12.8

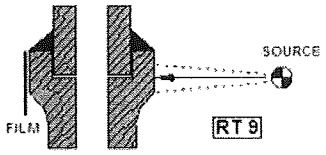

Tech #RT-9: Gap Check
1 Exposure: *QA Subsection 15.12.13*

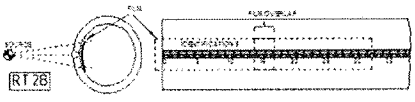

Tech #RT-2B: Long. Weld – Light Wall – Source Outside
1 Exposure/15 inches: *QA Subsection 15.12.4*

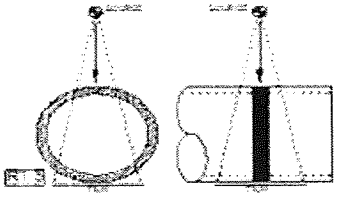

Tech #RT-5: Circ. Weld – Double Wall – Superimposed
3 Exposures@60° Spacing: QA Subsection 15.12.9

Penetrameter (IQI) Reference

1. ASTM A
2. ASTM B
3. ASTM C
4. FEEN/EN-462

5. DIN/EN-462 Set/Size 1 (Wire range 1 - 7)
6. DIN/EN 462 Set/Size 6 (Wire range 6 - 12)
7. DIN/EN-462 Set/Size 10 (Wire range 10 - 16)
8. DIN/EN-462 Set/Size 13 (Wire range 13 - 19)

9. Hole Type: Indicate IQI Designation Number

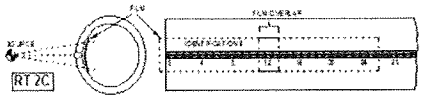

Tech #RT-2C: Long. Weld – Heavy Wall – Source Outside
1 Exposure/12 inches: *QA Subsection 15.12.5*

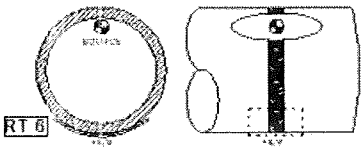

Tech #RT-6: Circumferential Weld - Source not Centered
Exposures as required: *QA Subsection 15.12.10*

COMMENTS

ALL CAN INSPECTION SERVICES (2011) INC.

Report # C5795

9323-37 Avenue, NW, Edmonton, Albert T6E 5N4
SHOP # 780-462-1072, **OFFICE #** 780-462-9797, **FAX #** 780-462-4664
EMAIL: shop@allcaninspection.com

Client:	**5Blue Process**		Client Job #	**5B1108-80**	
Address:	2303-8th St., Nisku, AB., T9E 7Z3		P.O. #		
Contact:	Name:	Joelle Dery-Brochu/ Andrew Ngo	Date:	**Oct. 7/13**	
	Phone:	780-955-2040 Ext: 241/227			
Work Location:	Fab Shop Nisku		Work Description:	Devon	

CODES
1. ASME B31.3 N/C
2. ASME B31.3 S/C
3. ASME Sec. VIII Div 1 UW51
4. ASME Sec. VIII Div. 1 UW52
5. CSA Z662
6. CSA Z662 (Sour)
7. API 650
8. CWB

NDE No:	Size & thickness Plus Code Max. reinforcement	Material	Code	IQI	Technique Number	Source Side of Object to Film Distance	Source to Object Distance	Number of Exposures	Welder ID	Discontinuity (LF - Lack of Fusion; IP - Incomplete Penetration; IC - Internal Concavity; BT - Burn Through; TI - Tungsten Inclusion; IU: Internal Undercut; EU: External Undercut; EP - Excessive Penetration; P - Porosity; S - Slag; HL - High-Low; C - Crack; AB - Arc Burn; HB - Hollow Bead. Severity: 1 = Slight, 2 = Medium, 3 = Severe (Reject))	Severity	Accept	Reject
			1 - 8	See Back	See Back	Inches	Inches				1 - 3		
7B-18	2" s80	P1	1	4	RT-3	0.343	2.282	3	J			√	
7D-6	2" s80	P1	1	4	RT-3	0.343	2.282	3	J	P @ 0", 2" & 7 1/2"	1	√	

RT Technician:	Gordon Thomas	CGSB Level:	II	Reg. # :	6	SNT-TC-1A Level:	III	SNT-TC-1A No:	6
RT Assistant # 1	Jasdeep Singh	CEDO #:	17879			SNT-TC-1A Level:	II	SNT-TC-1A No:	17879
RT Assistant # 2	Laurent Richer	CEDO #:	Trainee			SNT-TC-1A Level:	-	SNT-TC-1A No:	Trainee

Technician Signature — Oct. 7/13 — Date

ANDREW NGO
QUALITY CONTROL
TEL: 780-955-2040
Client Representative Signature

OCT 0 7 2013
Evaluation Date

The above interpretation is a technical opinion, not a guarantee.
Client signature indicates acceptance of the report and results.

Clock tape marker and start arrow marked on weldment.
It is the customer's responsibility to map welds on drawings.

Film Make / Brand	AGFA	Film Class - Type:	1-D4/D5
Screens Lead	Front 0.010	Back 0.010	One (no.) film per screen
Film Density:	Min. 2.0	Max. 4.0	
Penetrometer (IQI hole type) designation:	N/A	Recommended Max. U.G.:	0.20
Source Isotope:	IRIDIUM-192(Gamma)	Wall Viewing:	Single
Effective Focal Spot Size:	0.118 inches	Processing:	Automatic

RADIOGRAPHIC EXAMINATION REPORT

RADIOGRAPHIC EXAMINATION TECHNIQUE REFERENCE SHEET

ALL CAN INSPECTION SERVICES (2011) INC. RT TECHNIQUES
ALL CAN INSPECTION SERVICES (2011) INC. GENERAL RT PROCEDURE
Important Note: Always check the QA/Procedures Manual for the most current Procedure Revision status.

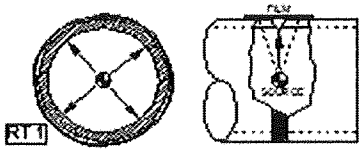

Tech #RT-1: Vessel Circumferential Weld
1 Exposure: QA Subsection 15.12.1

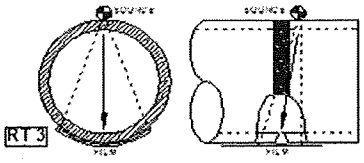

Tech #RT-3: Circ. Weld – Contact – Light Wall
3 Exposures@120° Spacing: QA Subsection 15.12.6

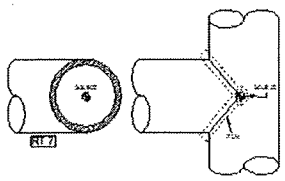

Tech #RT-7: Mitered "T" Joint - Single Wall - Source centered
Exposures as required: *QA Subsection 15.12.11*

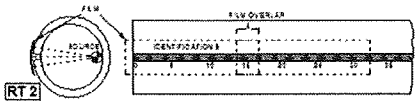

Tech #RT-2: Long. Weld - Light Wall – Source Inside
1 Exposure/15 Inches: *QA Subsection 15.12.2*

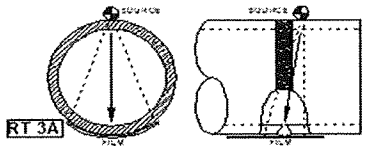

Tech #RT-3A: Circ. Weld – Contact – Heavy Wall
4 Exposures@90° Spacing: *QA Subsection 15.12.7*

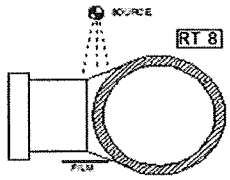

Tech #RT-8:Category "D" Weld
Exposures as required: *QA Subsection 15.12.12*

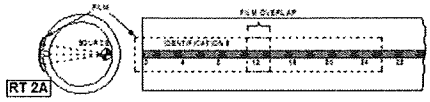

Tech #RT-2A: Long. Weld - Heavy Wall – Source Inside
1 Exposure/12 Inches: *QA Subsection 15.12.3*

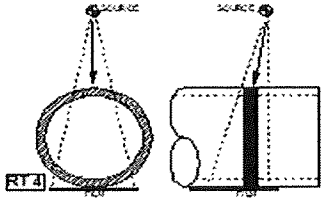

Tech #RT-4: Circ. Weld – Dbl Wall – Elipse
2 Exposures@90° Spacing: QA Subsection 15.12.8

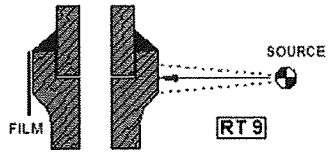

Tech #RT-9: Gap Check
1 Exposure: *QA Subsection 15.12.13*

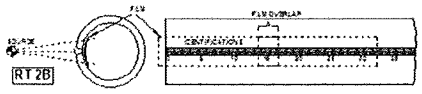

Tech #RT-2B: Long. Weld – Light Wall – Source Outside
1 Exposure/15 Inches: *QA Subsection 15.12.4*

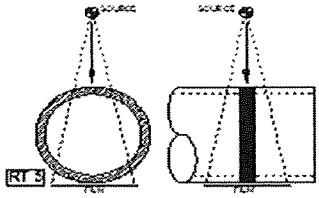

Tech #RT-5: Circ. Weld – Double Wall – Superimposed
3 Exposures@60° Spacing: QA Subsection 15.12.9

Penetrameter (IQI) Reference

1. ASTM A
2. ASTM B
3. ASTM C
4. FEEN/EN-462

5. DIN/EN-462 Set/Size 1 (Wire range 1 - 7)
6. DIN/EN 462 Set/Size 6 (Wire range 6 - 12)
7. DIN/EN-462 Set/Size 10 (Wire range 10 - 16)
8. DIN/EN-462 Set/Size 13 (Wire range 13 - 19)

9. Hole Type: Indicate IQI Designation Number



Tech #RT-2C: Long. Weld – Heavy Wall – Source Outside
1 Exposure/12 Inches: *QA Subsection 15.12.5*

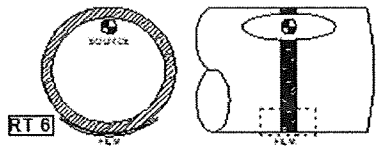

Tech #RT-6: Circumferential Weld - Source not Centered
Exposures as required: *QA Subsection 15.12.10*

COMMENTS

ALL CAN INSPECTION SERVICES (2011) INC.

Report # C5315

9323-37 Avenue, NW, Edmonton, Albert T6E 5N4
SHOP # 780-462-1072, **OFFICE #** 780-462-9797, **FAX #** 780-462-4664
EMAIL: shop@allcaninspection.com

Client:	**5Blue Process**		Client Job #	**5B1108-80**	
Address:	2303-8th St., Nisku, AB., T9E 7Z3		P.O. #		
Contact:	Name: Joelle Dery-Brochu/ Andrew Ngo		Date:	**Sept. 11/13**	
	Phone: 780-955-2040	**Ext:** 241/227			
Work Location:	Fab Shop Nisku		Work Description:		

CODES
1. ASME B31.3 N/C
2. ASME B31.3 S/C
3. ASME Sec. VIII Div 1 UW51
4. ASME Sec. VIII Div. 1 UW52
5. CSA Z662
6. CSA Z662 (Sour)
7. API 650
8. CWB

NDE No:	Size & thickness Plus Code Max. reinforcement	Material	Code	IQI	Technique Number	Source Side of Object to Film Distance	Source to Object Distance	Number of Exposures	Welder ID	LF - Lack of Fusion; IP - Incomplete Penetration; IC - Internal Concavity; BT - Burn Through; TI - Tungsten Inclusion; IU: Internal Undercut; EU: External Undercut; EP - Excessive Penetration; P - Porosity; S - Slag; HL - High-Low; C - Crack; AB - Arc Burn; HB - Hollow Bead. **Severity:** 1 = Slight, 2 = Medium, 3 = Severe (Reject) — Discontinuity	Severity	Accept	Reject
			1 - 8	See Back	See Back	Inches	Inches				1 - 3		
1A-7	12" STD	P1	1	2	RT-3	0.500	12.500	3	H	P @ 8"	1	√	
13A-8	4" STD	P1	1	4	RT-3	0.362	4.388	3	J			√	

RT Technician:	Gordon Thomas	CGSB Level:	II	Reg. # :	6	SNT-TC-1A Level:	III	SNT-TC-1A No:	6
RT Assistant # 1	Matthew Frawley	CEDO #:	16814			SNT-TC-1A Level:	II	SNT-TC-1A No:	16814
RT Assistant # 2	Laurent Richer	CEDO #:	Trainee			SNT-TC-1A Level:	-	SNT-TC-1A No:	Trainee

Technician Signature — Date: Sept. 11/13

ANDREW NGO
Client Representative Signature

QUALITY CONTROL
TEL: 780-955-2040

Evaluation Date: SEP 11 2013

The above interpretation is a technical opinion, not a guarantee.
Client signature indicates acceptance of the report and results.

Clock tape marker and start arrow marked on weldment.
It is the customer's responsibility to map welds on drawings.

Film Make / Brand	AGFA			Film Class - Type:	1-D4/D5
Screens Lead	Front 0.010	Back 0.010	One (no.) film per screen		
Film Density:	Min. 2.0	Max. 4.0			
Penetrometer (IQI hole type) designation:	N/A	Recommended Max. U.G.:	0.20		
Source Isotope:	IRIDIUM-192(Gamma)	Wall Viewing:	Single		
Effective Focal Spot Size:	0.118 inches	Processing:	Automatic		

RADIOGRAPHIC EXAMINATION REPORT

RADIOGRAPHIC EXAMINATION TECHNIQUE REFERENCE SHEET

ALL CAN INSPECTION SERVICES (2011) INC. RT TECHNIQUES
ALL CAN INSPECTION SERVICES (2011) INC. GENERAL RT PROCEDURE
Important Note: Always check the QA/Procedures Manual for the most current Procedure Revision status.

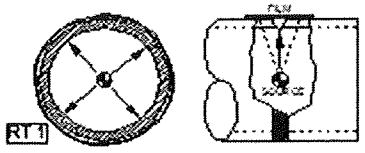

Tech #RT-1: Vessel Circumferential Weld
1 Exposure: QA Subsection 15.12.1

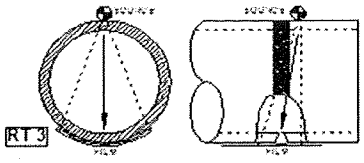

Tech #RT-3: Circ. Weld – Contact – Light Wall
3 Exposures@120° Spacing: QA Subsection 15.12.6

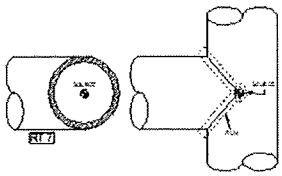

Tech #RT-7: Mitered "T" Joint - Single Wall - Source centered
Exposures as required: *QA Subsection 15.12.11*

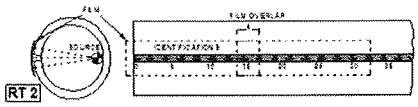

Tech #RT-2: Long. Weld - Light Wall – Source Inside
1 Exposure/15 inches: *QA Subsection 15.12.2*

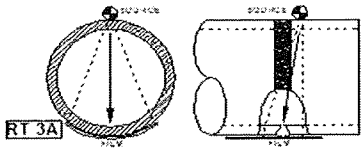

Tech #RT-3A: Circ. Weld – Contact – Heavy Wall
4 Exposures@90° Spacing: *QA Subsection 15.12.7*

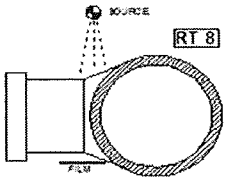

Tech #RT-8:Category "D" Weld
Exposures as required: *QA Subsection 15.12.12*

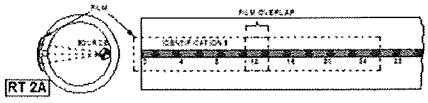

Tech #RT-2A: Long. Weld - Heavy Wall – Source Inside
1 Exposure/12 inches: *QA Subsection 15.12.3*

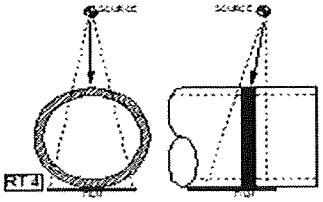

Tech #RT-4: Circ. Weld – Dbl Wall – Ellpse
2 Exposures@90° Spacing: QA Subsection 15.12.8

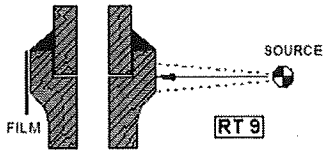

Tech #RT-9: Gap Check
1 Exposure: *QA Subsection 15.12.13*

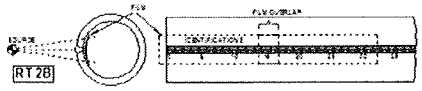

Tech #RT-2B: Long. Weld – Light Wall – Source Outside
1 Exposure/15 inches: *QA Subsection 15.12.4*

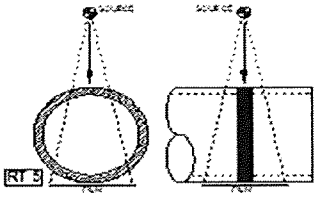

Tech #RT-5: Circ. Weld – Double Wall – Superimposed
3 Exposures@60° Spacing: QA Subsection 15.12.9

Penetrameter (IQI) Reference

1. ASTM A
2. ASTM B
3. ASTM C
4. FEEN/EN-462

5. DIN/EN-462 Set/Size 1 (Wire range 1 - 7)
6. DIN/EN 462 Set/Size 6 (Wire range 6 - 12)
7. DIN/EN-462 Set/Size 10 (Wire range 10 - 16)
8. DIN/EN-462 Set/Size 13 (Wire range 13 - 19)

9. Hole Type: Indicate IQI Designation Number

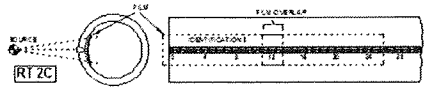

Tech #RT-2C: Long. Weld – Heavy Wall – Source Outside
1 Exposure/12 inches: *QA Subsection 15.12.5*

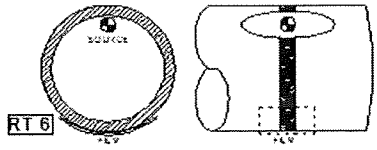

Tech #RT-6: Circumferential Weld - Source not Centered
Exposures as required: *QA Subsection 15.12.10*

COMMENTS

ALL CAN INSPECTION SERVICES (2011) INC.

Report # C5291

9323-37 Avenue, NW, Edmonton, Albert T6E 5N4
SHOP # 780-462-1072, **OFFICE #** 780-462-9797, **FAX #** 780-462-4664
EMAIL: shop@allcaninspection.com

Client:	**5Blue Process**		Client Job #	**5B1108-80**	
Address:	2303-8th St., Nisku, AB., T9E 7Z3		P.O. #		
Contact:	Name: Joelle Dery-Brochu/ Andrew Ngo		Date:	**Sept. 10/13**	
	Phone: 780-955-2040	**Ext:** 241/227			
Work Location:	Fab Shop Nisku		Work Description:	DEVON	

CODES
1. ASME B31.3 N/C
2. ASME B31.3 S/C
3. ASME Sec. VIII Div 1 UW51
4. ASME Sec. VIII Div. 1 UW52
5. CSA Z662
6. CSA Z662 (Sour)
7. API 650
8. CWB

NDE No:	Size & thickness Plus Code Max. reinforcement	Material	Code	IQI	Technique Number	Source Side of Object to Film Distance	Source to Object Distance	Number of Exposures	Welder ID	Discontinuity	Severity	Accept	Reject
			1 - 8	See Back	See Back	Inches	Inches				1 - 3		
2E-5	2" s80	P1	1	4	RT-3	0.343	2.282	3	J			√	
3D-7	12" STD	P1	1	2	RT-3	0.500	12.500	3	Z			√	

LF - Lack of Fusion; IP - Incomplete Penetration; IC - Internal Concavity; BT - Burn Through; TI - Tungsten Inclusion; IU: Internal Undercut; EU: External Undercut; EP - Excessive Penetration; P - Porosity; S - Slag; HL - High-Low; C - Crack; AB - Arc Burn; HB - Hollow Bead

Severity: 1 = Slight, 2 = Medium, 3 = Severe (Reject)

RT Technician:	Gordon Thomas	CGSB Level:	II	Reg. # :	6	SNT-TC-1A Level:	III	SNT-TC-1A No:	6
RT Assistant # 1	Jasdeep Singh	CEDO #:	17879			SNT-TC-1A Level:	II	SNT-TC-1A No:	17879
RT Assistant # 2	Craig Anderson	CEDO #:	Trainee			SNT-TC-1A Level:	-	SNT-TC-1A No:	Trainee

Technician Signature — Date: Sept. 10/13

Client Representative Signature — Evaluation Date: SEP 10 2013

ANDREW NGO
QUALITY CONTROL
TEL: 780-955-2041

The above interpretation is a technical opinion, not a guarantee.
Client signature indicates acceptance of the report and results.

Clock tape marker and start arrow marked on weldment.
It is the customer's responsibility to map welds on drawings.

Film Make / Brand	AGFA	Film Class - Type:	1-D4/D5
Screens Lead	Front 0.010	Back 0.010	One (no.) film per screen
Film Density:	Min. 2.0	Max. 4.0	
Penetrometer (IQI hole type) designation:	N/A	Recommended Max. U.G.:	0.20
Source Isotope:	IRIDIUM-192(Gamma)	Wall Viewing:	Single
Effective Focal Spot Size:	0.118 inches	Processing:	Automatic

RADIOGRAPHIC EXAMINATION REPORT

RADIOGRAPHIC EXAMINATION TECHNIQUE REFERENCE SHEET

ALL CAN INSPECTION SERVICES (2011) INC. RT TECHNIQUES
ALL CAN INSPECTION SERVICES (2011) INC. GENERAL RT PROCEDURE
Important Note: Always check the QA/Procedures Manual for the most current Procedure Revision status.

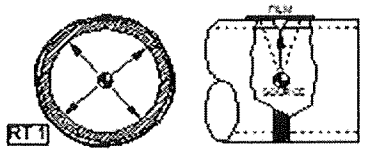

Tech #RT-1: Vessel Circumferential Weld
1 Exposure: QA Subsection 15.12.1

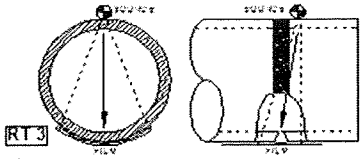

Tech #RT-3: Circ. Weld – Contact – Light Wall
3 Exposures@120° Spacing: QA Subsection 15.12.6

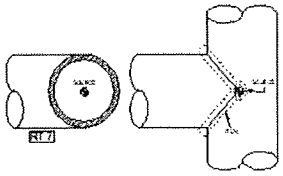

Tech #RT-7: Mitered "T" Joint - Single Wall - Source centered
Exposures as required: *QA Subsection 15.12.11*

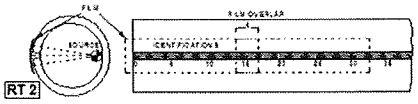

Tech #RT-2: Long. Weld - Light Wall – Source Inside
1 Exposure/15 inches: *QA Subsection 15.12.2*

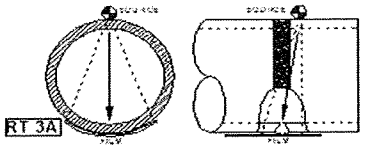

Tech #RT-3A: Circ. Weld – Contact – Heavy Wall
4 Exposures@90° Spacing: *QA Subsection 15.12.7*

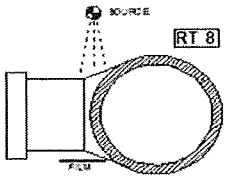

Tech #RT-8:Category "D" Weld
Exposures as required: *QA Subsection 15.12.12*

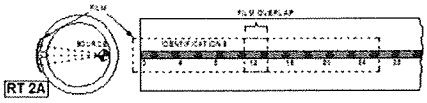

Tech #RT-2A: Long. Weld - Heavy Wall – Source Inside
1 Exposure/12 inches: *QA Subsection 15.12.3*

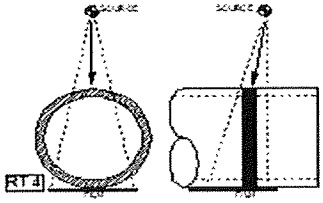

Tech #RT-4: Circ. Weld – Dbl Wall – Ellpse
2 Exposures@90° Spacing: QA Subsection 15.12.8

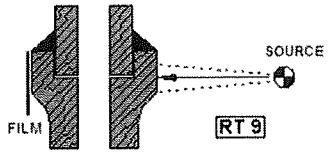

Tech #RT-9: Gap Check
1 Exposure: *QA Subsection 15.12.13*

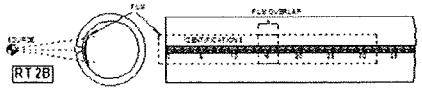

Tech #RT-2B: Long. Weld – Light Wall – Source Outside
1 Exposure/15 inches: *QA Subsection 15.12.4*

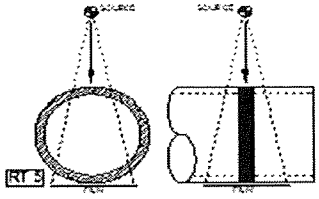

Tech #RT-5: Circ. Weld – Double Wall – Superimposed
3 Exposures@60° Spacing: QA Subsection 15.12.9

Penetrameter (IQI) Reference

1. ASTM A
2. ASTM B
3. ASTM C
4. FEEN/EN-462

5. DIN/EN-462 Set/Size 1 (Wire range 1 - 7)
6. DIN/EN 462 Set/Size 6 (Wire range 6 - 12)
7. DIN/EN-462 Set/Size 10 (Wire range 10 - 16)
8. DIN/EN-462 Set/Size 13 (Wire range 13 - 19)

9. Hole Type: Indicate IQI Designation Number

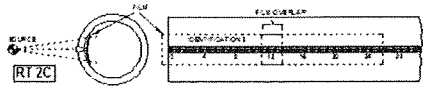

Tech #RT-2C: Long. Weld – Heavy Wall – Source Outside
1 Exposure/12 inches: *QA Subsection 15.12.5*

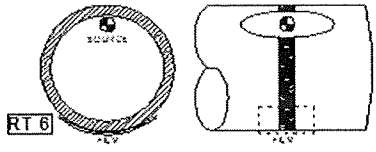

Tech #RT-6: Circumferential Weld - Source not Centered
Exposures as required: *QA Subsection 15.12.10*

COMMENTS

ALL CAN INSPECTION SERVICES (2011) INC.

Report # C5276

9323-37 Avenue, NW, Edmonton, Albert T6E 5N4
SHOP # 780-462-1072, **OFFICE #** 780-462-9797, **FAX #** 780-462-4664
EMAIL: shop@allcaninspection.com

Client:	**5Blue Process**		Client Job #	**5B1108-80**	
Address:	2303-8th St., Nisku, AB., T9E 7Z3		P.O. #		
Contact:	Name: Joelle Dery-Brochu/ Andrew Ngo		Date:	**Sept. 9/13**	
	Phone: 780-955-2040	**Ext:** 241/227			
Work Location:	Fab Shop Nisku		Work Description:		

CODES
1. ASME B31.3 N/C
2. ASME B31.3 S/C
3. ASME Sec. VIII Div 1 UW51
4. ASME Sec. VIII Div. 1 UW52
5. CSA Z662
6. CSA Z662 (Sour)
7. API 650
8. CWB

NDE No:	Size & thickness Plus Code Max. reinforcement	Material	Code	IQI	Technique Number	Source Side of Object to Film Distance	Source to Object Distance	Number of Exposures	Welder ID	Discontinuity	Severity	Accept	Reject
			1 - 8	See Back	See Back	Inches	Inches			Severity: 1 = Slight, 2 = Medium, 3 = Severe (Reject)	1 - 3		
2A-1	4" STD	P1	1	4	RT-3	0.362	4.388	3	J			√	
2A-12	2" s80	P1	1	4	RT-3	0.343	2.282	3	J			√	
2C-15	2" s80	P1	1	4	RT-3	0.343	2.282	3	J			√	
2D-27	2" s80	P1	1	4	RT-3	0.343	2.282	3	J			√	
4A-1	2" s80	P1	1	4	RT-3	0.343	2.282	3	C			√	
4B-12	2" s80	P1	1	4	RT-3	0.343	2.282	3	C			√	
7C-14	2" s80	P1	1	4	RT-3	0.343	2.282	3	C			√	
10A-4	2" s80	P1	1	4	RT-3	0.343	2.282	3	H			√	

LF - Lack of Fusion
IP - Incomplete Penetration
IC - Internal Concavity
BT - Burn Through
TI - Tungsten Inclusion
IU: Internal Undercut
EU: External Undercut
EP - Excessive Penetration
P - Porosity
S - Slag
HL - High-Low
C - Crack
AB - Arc Burn
HB - Hollow Bead

RT Technician:	Gordon Thomas	CGSB Level:	II	Reg. # :	6	SNT-TC-1A Level:	III	SNT-TC-1A No:	6
RT Assistant # 1	Jasdeep Singh			CEDO #:	17879	SNT-TC-1A Level:	II	SNT-TC-1A No:	17879
RT Assistant # 2	John Sobolewski			CEDO #:	Trainee	SNT-TC-1A Level:	-	SNT-TC-1A No:	Trainee

Technician Signature — Sept. 9/13 — Date

ANDREW NGO
QUALITY CONTROL
TEL: 780-955-2040
Client Representative Signature

SEP 0 9 2013
Evaluation Date

The above interpretation is a technical opinion, not a guarantee.
Client signature indicates acceptance of the report and results.

Clock tape marker and start arrow marked on weldment.
It is the customer's responsibility to map welds on drawings.

Film Make / Brand	AGFA	Film Class - Type:	1-D4/D5
Screens Lead	Front 0.010	Back 0.010	One (no.) film per screen
Film Density:	Min. 2.0	Max. 4.0	
Penetrometer (IQI hole type) designation:	N/A	Recommended Max. U.G.:	0.20
Source Isotope:	IRIDIUM-192(Gamma)	Wall Viewing:	Single
Effective Focal Spot Size:	0.118 inches	Processing:	Automatic

RADIOGRAPHIC EXAMINATION REPORT

RADIOGRAPHIC EXAMINATION TECHNIQUE REFERENCE SHEET

ALL CAN INSPECTION SERVICES (2011) INC. RT TECHNIQUES
ALL CAN **INSPECTION SERVICES (2011) INC. GENERAL RT PROCEDURE**
Important Note: Always check the QA/Procedures Manual for the most current Procedure Revision status.

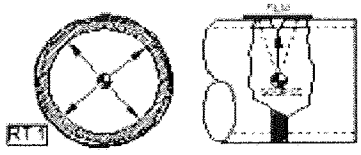

Tech #RT-1: Vessel Circumferential Weld
1 Exposure: QA Subsection 15.12.1

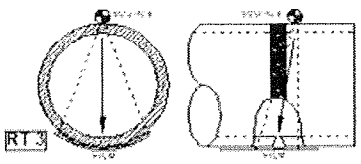

Tech #RT-3: Circ. Weld – Contact – Light Wall
3 Exposures@120° Spacing: QA Subsection 15.12.6

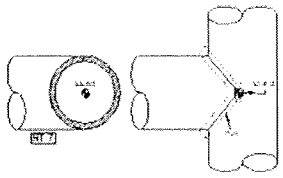

Tech #RT-7: Mitered "T" Joint - Single Wall - Source centered
Exposures as required: *QA Subsection 15.12.11*

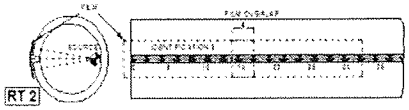

Tech #RT-2: Long. Weld - Light Wall – Source Inside
1 Exposure/15 inches: *QA Subsection 15.12.2*

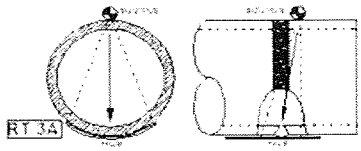

Tech #RT-3A: Circ. Weld – Contact – Heavy Wall
4 Exposures@90° Spacing: *QA Subsection 15.12.7*

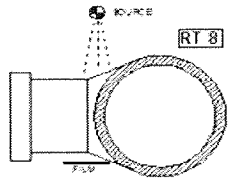

Tech #RT-8:Category "D" Weld
Exposures as required: *QA Subsection 15.12.12*

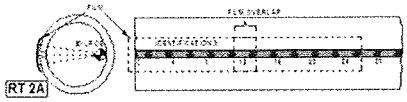

Tech #RT-2A: Long. Weld - Heavy Wall – Source Inside
1 Exposure/12 inches: *QA Subsection 15.12.3*

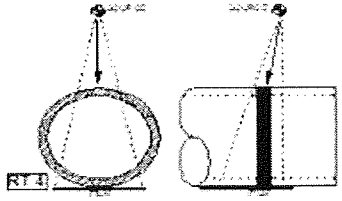

Tech #RT-4: Circ. Weld – Dbl Wall – Elipse
2 Exposures@90° Spacing: QA Subsection 15.12.8

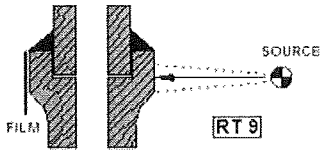

Tech #RT-9: Gap Check
1 Exposure: *QA Subsection 15.12.13*

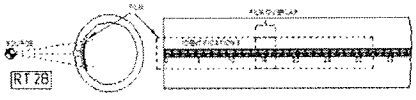

Tech #RT-2B: Long. Weld – Light Wall – Source Outside
1 Exposure/15 inches: *QA Subsection 15.12.4*

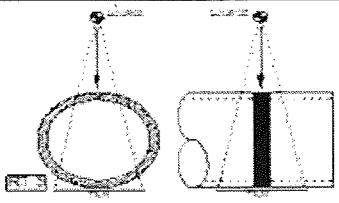

Tech #RT-5: Circ. Weld – Double Wall – Superimposed
3 Exposures@60° Spacing: QA Subsection 15.12.9

Penetrameter (IQI) Reference

1. ASTM A
2. ASTM B
3. ASTM C
4. FEEN/EN-462

5. DIN/EN-462 Set/Size 1 (Wire range 1 - 7)
6. DIN/EN 462 Set/Size 6 (Wire range 6 - 12)
7. DIN/EN-462 Set/Size 10 (Wire range 10 - 16)
8. DIN/EN-462 Set/Size 13 (Wire range 13 - 19)

9. Hole Type: Indicate IQI Designation Number

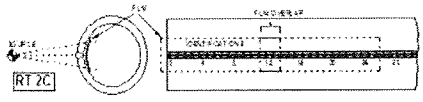

Tech #RT-2C: Long. Weld – Heavy Wall – Source Outside
1 Exposure/12 inches: *QA Subsection 15.12.5*

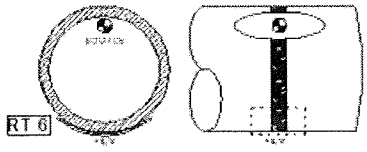

Tech #RT-6: Circumferential Weld - Source not Centered
Exposures as required: *QA Subsection 15.12.10*

COMMENTS

ALL CAN INSPECTION SERVICES (2011) INC.

Report # C5241

9323-37 Avenue, NW, Edmonton, Albert T6E 5N4
SHOP # 780-462-1072, **OFFICE #** 780-462-9797, **FAX #** 780-462-4664
EMAIL: shop@allcaninspection.com

Client:	**5Blue Process**		Client Job #	**5B1108-80**	
Address:	2303-8th St., Nisku, AB., T9E 7Z3		P.O. #		
Contact:	Name: Joelle Dery-Brochu/ Andrew Ngo		Date:	**Sept. 5/13**	
	Phone: 780-955-2040	Ext: 241/227			
Work Location:	Fab Shop Nisku		Work Description:	DEVON	

CODES
1. ASME B31.3 N/C
2. ASME B31.3 S/C
3. ASME Sec. VIII Div 1 UW51
4. ASME Sec. VIII Div. 1 UW52
5. CSA Z662
6. CSA Z662 (Sour)
7. API 650
8. CWB

NDE No:	Size & thickness Plus Code Max. reinforcement	Material	Code	IQI	Technique Number	Source Side of Object to Film Distance	Source to Object Distance	Number of Exposures	Welder ID	LF - Lack of Fusion; IP - Incomplete Penetration; IC - Internal Concavity; BT - Burn Through; TI - Tungsten Inclusion; IU: Internal Undercut; EU: External Undercut; EP - Excessive Penetration; P - Porosity; S - Slag; HL - High-Low; C - Crack; AB - Arc Burn; HB - Hollow Bead. **Severity:** 1 = Slight, 2 = Medium, 3 = Severe (Reject) — Discontinuity	Severity	Accept	Reject
			1 - 8	See Back	See Back	Inches	Inches				1 - 3		
3A-3	14" STD	P1	1	2	RT-1	0.500	6.625	1	Z			√	
7A-4	2" s80	P1	1	4	RT-3	0.343	2.282	3	C			√	
7B-5	2" s80	P1	1	4	RT-3	0.343	2.282	3	C			√	
8A-2	2" s80	P1	1	4	RT-3	0.343	2.282	3	H	P @ 3"	1	√	

RT Technician:	Gordon Thomas	CGSB Level:	II	Reg. # :	6	SNT-TC-1A Level:	III	SNT-TC-1A No:	6
RT Assistant # 1	Shannon Berg	CEDO #:	17583			SNT-TC-1A Level:	II	SNT-TC-1A No:	17583
RT Assistant # 2	John Sobolewski	CEDO #:	Trainee			SNT-TC-1A Level:	-	SNT-TC-1A No:	Trainee

Technician Signature — Sept. 5/13 (Date)

ANDREW NGO
QUALITY CONTROL
TEL: 780-955-2040
Client Representative Signature

SEP 0 5 2013
Evaluation Date

The above interpretation is a technical opinion, not a guarantee.
Client signature indicates acceptance of the report and results.

Clock tape marker and start arrow marked on weldment.
It is the customer's responsibility to map welds on drawings.

Film Make / Brand	AGFA	Film Class - Type:	1-D4/D5
Screens Lead	Front 0.010	Back 0.010	One (no.) film per screen
Film Density:	Min. 2.0	Max. 4.0	
Penetrometer (IQI hole type) designation:	N/A	Recommended Max. U.G.:	0.20
Source Isotope:	IRIDIUM-192(Gamma)	Wall Viewing:	Single
Effective Focal Spot Size:	0.118 inches	Processing:	Automatic

RADIOGRAPHIC EXAMINATION REPORT

RADIOGRAPHIC EXAMINATION TECHNIQUE REFERENCE SHEET

ALL CAN INSPECTION SERVICES (2011) INC. RT TECHNIQUES
ALL CAN INSPECTION SERVICES (2011) INC. GENERAL RT PROCEDURE
Important Note: Always check the QA/Procedures Manual for the most current Procedure Revision status.

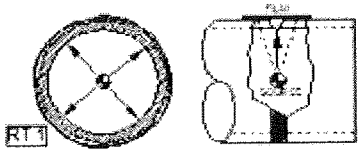

Tech #RT-1: Vessel Circumferential Weld
1 Exposure: QA Subsection 15.12.1

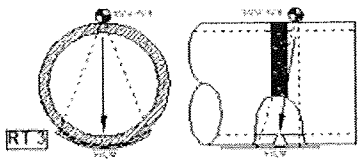

Tech #RT-3: Circ. Weld – Contact – Light Wall
3 Exposures@120° Spacing: QA Subsection 15.12.6

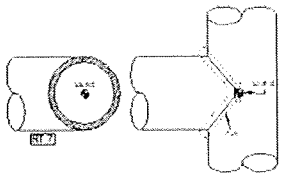

Tech #RT-7: Mitered "T" Joint - Single Wall - Source centered
Exposures as required: *QA Subsection 15.12.11*

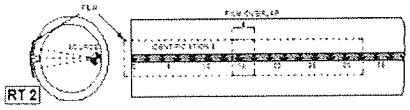

Tech #RT-2: Long. Weld - Light Wall – Source Inside
1 Exposure/15 inches: *QA Subsection 15.12.2*

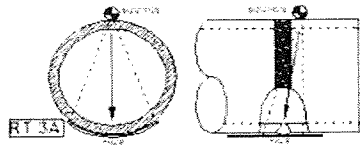

Tech #RT-3A: Circ. Weld – Contact – Heavy Wall
4 Exposures@90° Spacing: *QA Subsection 15.12.7*

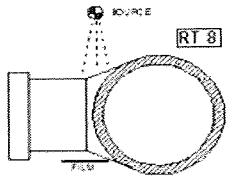

Tech #RT-8:Category "D" Weld
Exposures as required: *QA Subsection 15.12.12*

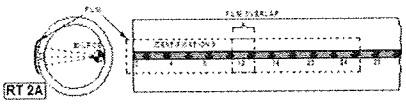

Tech #RT-2A: Long. Weld - Heavy Wall – Source Inside
1 Exposure/12 inches: *QA Subsection 15.12.3*

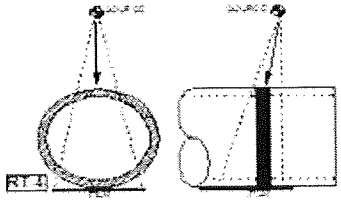

Tech #RT-4: Circ. Weld – Dbl Wall – Elipse
2 Exposures@90° Spacing: QA Subsection 15.12.8

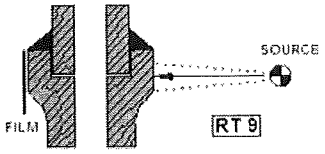

Tech #RT-9: Gap Check
1 Exposure: *QA Subsection 15.12.13*

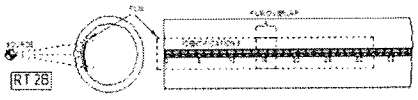

Tech #RT-2B: Long. Weld – Light Wall – Source Outside
1 Exposure/15 inches: *QA Subsection 15.12.4*

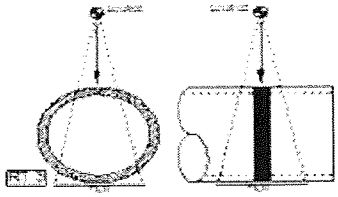

Tech #RT-5: Circ. Weld – Double Wall – Superimposed
3 Exposures@60° Spacing: QA Subsection 15.12.9

Penetrameter (IQI) Reference

1. ASTM A
2. ASTM B
3. ASTM C
4. FEEN/EN-462

5. DIN/EN-462 Set/Size 1 (Wire range 1 - 7)
6. DIN/EN 462 Set/Size 6 (Wire range 6 - 12)
7. DIN/EN-462 Set/Size 10 (Wire range 10 - 16)
8. DIN/EN-462 Set/Size 13 (Wire range 13 - 19)

9. Hole Type: Indicate IQI Designation Number

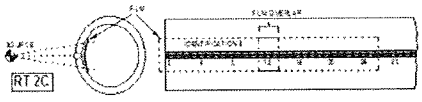

Tech #RT-2C: Long. Weld – Heavy Wall – Source Outside
1 Exposure/12 inches: *QA Subsection 15.12.5*

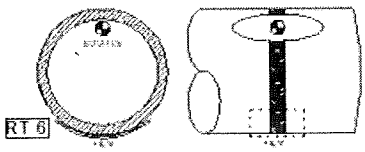

Tech #RT-6: Circumferential Weld - Source not Centered
Exposures as required: *QA Subsection 15.12.10*

COMMENTS

ALL CAN INSPECTION SERVICES (2011) INC.

Report # C5167

9323-37 Avenue, NW, Edmonton, Albert T6E 5N4
SHOP # 780-462-1072, **OFFICE #** 780-462-9797, **FAX #** 780-462-4664
EMAIL: shop@allcaninspection.com

Client:	**5BLUE PROCESS**	**Client Job #**	**5B1108-20**
Address:	Nisku	**P.O. #**	
Contact: Name:	Andrew Ngo/Joelle Dery-Brochu	**Date:**	**Aug. 28/13**
Phone:	780-955-2040 **Ext:** 227/241		
Work Location:	Fab Shop Nisku	**Work Description:**	

CODES
1. ASME B31.3 N/C
2. ASME B31.3 S/C
3. ASME Sec. VIII Div 1 UW51
4. ASME Sec. VIII Div. 1 UW52
5. CSA Z662
6. CSA Z662 (Sour)
7. API 650
8. Shot to Z662,Interp. B31.3N

NDE No:	Size & thickness Plus Code Max. reinforcement	Material	Code	IQI	Technique Number	Source Side of Object to Film Distance	Source to Object Distance	Number of Exposures	Welder ID	Discontinuity (LF - Lack of Fusion; IP - Incomplete Penetration; IC - Internal Concavity; BT - Burn Through; TI - Tungsten Inclusion; IU: Internal Undercut; EU: External Undercut; EP - Excessive Penetration; P - Porosity; S - Slag; HL - High-Low; C - Crack; AB - Arc Burn; HB - Hollow Bead) Severity: 1 = Slight, 2 = Medium, 3 = Severe (Reject)	Severity	Accept	Reject
			1 - 8	See Back	See Back	Inches	Inches				1 - 3		
N4 X3	2" S160	P1	3	2	RT-3A	0.343	2.531	4	U	P @ 0"	1	√	

RT Technician:	Gordon Thomas	CGSB Level:	II	Reg. # :	6	SNT-TC-1A Level:	III	SNT-TC-1A No:	6
RT Assistant # 1	Jasdeep Singh	CEDO #:	17879			SNT-TC-1A Level:	II	SNT-TC-1A No:	17879
RT Assistant # 2	Craig Anderson	CEDO #:	Trainee			SNT-TC-1A Level:	-	SNT-TC-1A No:	Trainee

Technician Signature — Aug. 28/13 Date

ANDREW NGO
QUALITY CONTROL
TEL:780-955-2040
Client Representative Signature

AUG 2 8 2013
Evaluation Date

The above interpretation is a technical opinion, not a guarantee.
Client signature indicates acceptance of the report and results.

Clock tape marker and start arrow marked on weldment.
It is the customer's responsibility to map welds on drawings.

Film Make / Brand	AGFA	Film Class / Type:	1-D4/D5
Screens Lead	Front 0.010	Back 0.010	One (no.) film per screen
Film Density:	Min. 2.0	Max. 4.0	
Penetrometer (IQI hole type) designation:	N/A	Recommended Max. U.G.:	0.20
Source Isotope:	IRIDIUM-192(Gamma)	Wall Viewing:	Single
Effective Focal Spot Size:	0.118 inches	Processing:	Automatic

RADIOGRAPHIC EXAMINATION REPORT

RADIOGRAPHIC EXAMINATION TECHNIQUE REFERENCE SHEET

ALL CAN INSPECTION SERVICES (2011) INC. RT TECHNIQUES
ALL CAN **INSPECTION SERVICES (2011) INC. GENERAL RT PROCEDURE**
Important Note: Always check the QA/Procedures Manual for the most current Procedure Revision status.

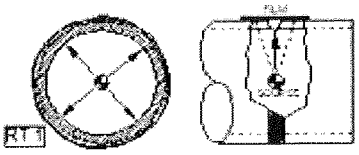

Tech #RT-1: Vessel Circumferential Weld
1 Exposure: QA Subsection 15.12.1

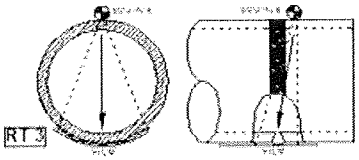

Tech #RT-3: Circ. Weld – Contact – Light Wall
3 Exposures@120° Spacing: QA Subsection 15.12.6

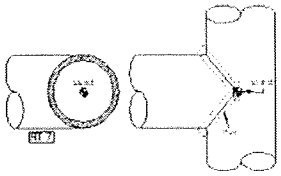

Tech #RT-7: Mitered "T" Joint - Single Wall - Source centered
Exposures as required: *QA Subsection 15.12.11*

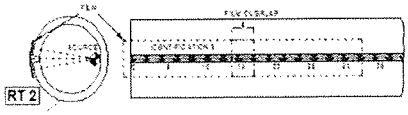

Tech #RT-2: Long. Weld - Light Wall – Source Inside
1 Exposure/15 inches: *QA Subsection 15.12.2*

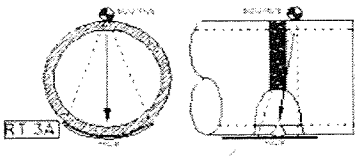

Tech #RT-3A: Circ. Weld – Contact – Heavy Wall
4 Exposures@90° Spacing: *QA Subsection 15.12.7*

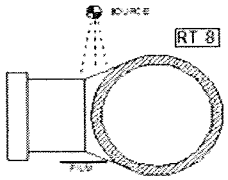

Tech #RT-8:Category "D" Weld
Exposures as required: *QA Subsection 15.12.12*

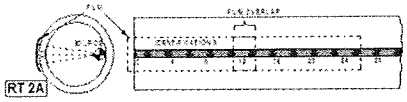

Tech #RT-2A: Long. Weld - Heavy Wall – Source Inside
1 Exposure/12 inches: *QA Subsection 15.12.3*

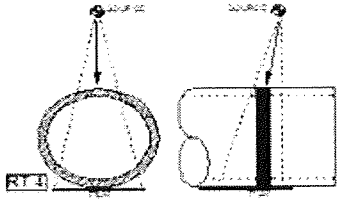

Tech #RT-4: Circ. Weld – Dbl Wall – Elipse
2 Exposures@90° Spacing: QA Subsection 15.12.8

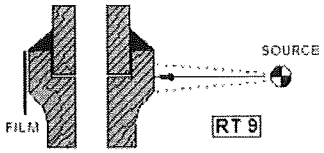

Tech #RT-9: Gap Check
1 Exposure: *QA Subsection 15.12.13*

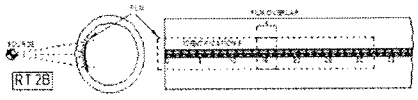

Tech #RT-2B: Long. Weld – Light Wall – Source Outside
1 Exposure/15 inches: *QA Subsection 15.12.4*

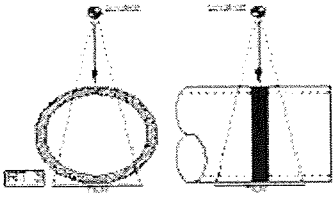

Tech #RT-5: Circ. Weld – Double Wall – Superimposed
3 Exposures@60° Spacing: QA Subsection 15.12.9

Penetrameter (IQI) Reference

1. ASTM A
2. ASTM B
3. ASTM C
4. FEEN/EN-462

5. DIN/EN-462 Set/Size 1 (Wire range 1 - 7)
6. DIN/EN 462 Set/Size 6 (Wire range 6 - 12)
7. DIN/EN-462 Set/Size 10 (Wire range 10 - 16)
8. DIN/EN-462 Set/Size 13 (Wire range 13 - 19)

9. Hole Type: Indicate IQI Designation Number

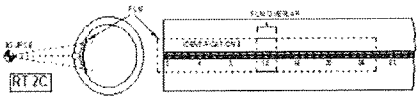

Tech #RT-2C: Long. Weld – Heavy Wall – Source Outside
1 Exposure/12 inches: *QA Subsection 15.12.5*

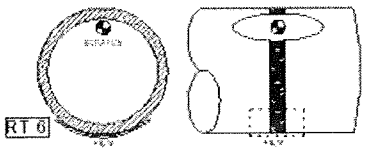

Tech #RT-6: Circumferential Weld - Source not Centered
Exposures as required: *QA Subsection 15.12.10*

COMMENTS

ALL CAN INSPECTION SERVICES (2011) INC.

Report # C5135

9323-37 Avenue, NW, Edmonton, Albert T6E 5N4
SHOP # 780-462-1072, **OFFICE #** 780-462-9797, **FAX #** 780-462-4664
EMAIL: shop@allcaninspection.com

Client:	**5BLUE PROCESS**		Client Job #	**5B1108-20**	
Address:	Nisku		P.O. #		
Contact:	Name: Andrew Ngo/Joelle Dery-Brochu		Date:	**Aug.27/13**	
	Phone: 780-955-2040	**Ext:** 227/241			
Work Location:	Fab Shop Nisku		Work Description:		

CODES
1. ASME B31.3 N/C
2. ASME B31.3 S/C
3. ASME Sec. VIII Div 1 UW51
4. ASME Sec. VIII Div. 1 UW52
5. CSA Z662
6. CSA Z662 (Sour)
7. API 650
8. Shot to Z662,Interp. B31.3N

NDE No:	Size & thickness Plus Code Max. reinforcement	Material	Code	IQI	Technique Number	Source Side of Object to Film Distance	Source to Object Distance	Number of Exposures	Welder ID	Discontinuity (LF - Lack of Fusion; IP - Incomplete Penetration; IC - Internal Concavity; BT - Burn Through; TI - Tungsten Inclusion; IU: Internal Undercut; EU: External Undercut; EP - Excessive Penetration; P - Porosity; S - Slag; HL - High-Low; C - Crack; AB - Arc Burn; HB - Hollow Bead) Severity: 1 = Slight, 2 = Medium, 3 = Severe (Reject)	Severity	Accept	Reject
			1 - 8	See Back	See Back	Inches	Inches				1 - 3		
CS1R1	67.25 X 0.625"	P1	3	2	RT-1	0.750	33.000	1	U				
	90-105"											√	
	105-120											√	
	120-135"											√	
	135-150"									P @ 136"	1	√	
CS2R1	67.25 X 0.625"	P1	3	2	RT-1	0.750	33.000	1	U				
	30-45"									P @ 44"	1	√	
	135-150"											√	
	150-165"									P @ 155"	1	√	
	195-210"											√	

RT Technician:	Gordon Thomas	CGSB Level:	II	Reg. # :	6	SNT-TC-1A Level:	III	SNT-TC-1A No:	6
RT Assistant # 1	Ken Brunlees	CEDO #:	15425			SNT-TC-1A Level:	II	SNT-TC-1A No:	15425
RT Assistant # 2	Craig Anderson	CEDO #:	Trainee			SNT-TC-1A Level:	-	SNT-TC-1A No:	Trainee

Technician Signature — Aug.27/13 (Date)

ANDREW NGO
QUALITY CONTROL
TEL: 780-955-2040
Client Representative Signature — AUG 27 2013 (Evaluation Date)

The above interpretation is a technical opinion, not a guarantee.
Client signature indicates acceptance of the report and results.

Clock tape marker and start arrow marked on weldment.
It is the customer's responsibility to map welds on drawings.

Film Make / Brand	AGFA	Film Class / Type:	1-D4/D5
Screens Lead	Front 0.010	Back 0.010	One (no.) film per screen
Film Density:	Min. 2.0	Max. 4.0	
Penetrometer (IQI hole type) designation:	N/A	Recommended Max. U.G.:	0.20
Source Isotope:	IRIDIUM-192(Gamma)	Wall Viewing:	Single
Effective Focal Spot Size:	0.118 inches	Processing:	Automatic

RADIOGRAPHIC EXAMINATION REPORT

RADIOGRAPHIC EXAMINATION TECHNIQUE REFERENCE SHEET

ALL CAN INSPECTION SERVICES (2011) INC. RT TECHNIQUES
ALL CAN INSPECTION SERVICES (2011) INC. GENERAL RT PROCEDURE
Important Note: Always check the QA/Procedures Manual for the most current Procedure Revision status.

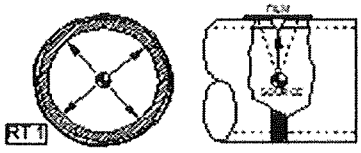

Tech #RT-1: Vessel Circumferential Weld
1 Exposure: QA Subsection 15.12.1

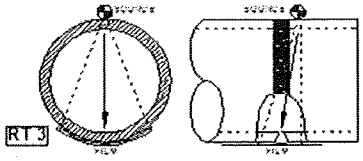

Tech #RT-3: Circ. Weld – Contact – Light Wall
3 Exposures@120° Spacing: QA Subsection 15.12.6

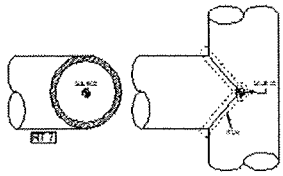

Tech #RT-7: Mitered "T" Joint - Single Wall - Source centered
Exposures as required: *QA Subsection 15.12.11*

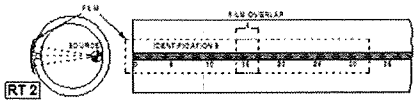

Tech #RT-2: Long. Weld - Light Wall – Source Inside
1 Exposure/15 Inches: *QA Subsection 15.12.2*

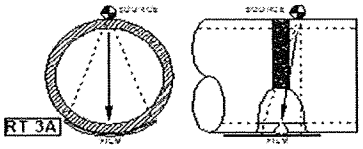

Tech #RT-3A: Circ. Weld – Contact – Heavy Wall
4 Exposures@90° Spacing: *QA Subsection 15.12.7*

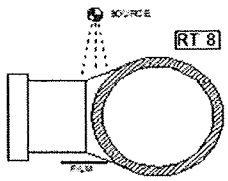

Tech #RT-8:Category "D" Weld
Exposures as required: *QA Subsection 15.12.12*

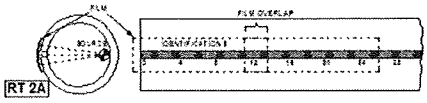

Tech #RT-2A: Long. Weld - Heavy Wall – Source Inside
1 Exposure/12 Inches: *QA Subsection 15.12.3*

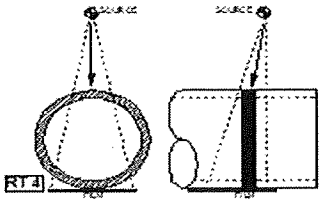

Tech #RT-4: Circ. Weld – Dbl Wall – Ellpse
2 Exposures@90° Spacing: QA Subsection 15.12.8

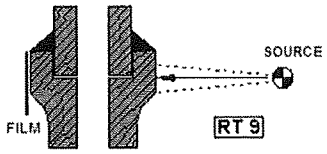

Tech #RT-9: Gap Check
1 Exposure: *QA Subsection 15.12.13*

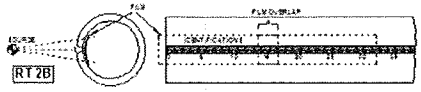

Tech #RT-2B: Long. Weld – Light Wall – Source Outside
1 Exposure/15 Inches: *QA Subsection 15.12.4*

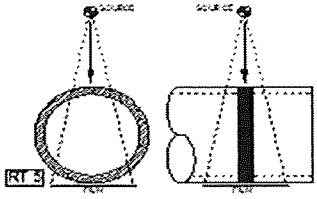

Tech #RT-5: Circ. Weld – Double Wall – Superimposed
3 Exposures@60° Spacing: QA Subsection 15.12.9

Penetrameter (IQI) Reference

1. ASTM A
2. ASTM B
3. ASTM C
4. FEEN/EN-462

5. DIN/EN-462 Set/Size 1 (Wire range 1 - 7)
6. DIN/EN 462 Set/Size 6 (Wire range 6 - 12)
7. DIN/EN-462 Set/Size 10 (Wire range 10 - 16)
8. DIN/EN-462 Set/Size 13 (Wire range 13 - 19)

9. Hole Type: Indicate IQI Designation Number

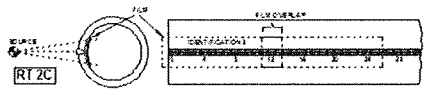

Tech #RT-2C: Long. Weld – Heavy Wall – Source Outside
1 Exposure/12 Inches: *QA Subsection 15.12.5*

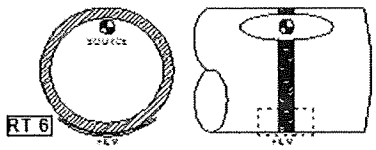

Tech #RT-6: Circumferential Weld - Source not Centered
Exposures as required: *QA Subsection 15.12.10*

COMMENTS

ALL CAN INSPECTION SERVICES (2011) INC.

Report # C4766

9323-37 Avenue, NW, Edmonton, Albert T6E 5N4
SHOP # 780-462-1072, **OFFICE #** 780-462-9797, **FAX #** 780-462-4664
EMAIL: shop@allcaninspection.com

Client:	**5Blue Process**		Client Job #	**5B1108-20**
Address:	2303-8th St., Nisku, AB., T9E 7Z3		P.O. #	
Contact:	Name: Joelle Dery-Brochu/ Andrew Ngo		Date:	**August 8/13**
	Phone: 780-955-2040	**Ext:** 241/227		
Work Location:	Fab Shop Nisku		Work Description:	

CODES
1. ASME B31.3 N/C
2. ASME B31.3 S/C
3. ASME Sec. VIII Div 1 UW51
4. ASME Sec. VIII Div. 1 UW52
5. CSA Z662
6. CSA Z662 (Sour)
7. API 650
8. CWB

LF - Lack of Fusion; IP - Incomplete Penetration; IC - Internal Concavity; BT - Burn Through; TI - Tungsten Inclusion; IU: Internal Undercut; EU: External Undercut; EP - Excessive Penetration; P - Porosity; S - Slag; HL - High-Low; C - Crack; AB - Arc Burn; HB - Hollow Bead

Severity: 1 = Slight, 2 = Medium, 3 = Severe (Reject)

NDE No:	Size & thickness Plus Code Max. reinforcement	Material	Code (1-8)	IQI (See Back)	Technique Number (See Back)	Source Side of Object to Film Distance (Inches)	Source to Object Distance (Inches)	Number of Exposures	Welder ID	Discontinuity	Severity (1-3)	Accept	Reject
L/S 1	(4' x 5/8")	P1	3	2	RT-2	0.750	25.000	1	U/X				
	0-15"											√	
	15-30"											√	
	30-45"											√	
	45-end											√	
L/S 2	(8' x 5/8")	P1	3	2	RT-2	0.625	25.000	1	U/X				
	0-15"											√	
	15-30"											√	
	30-45"									P @ 36"	1	√	
	45-60"											√	
	60-75"											√	
	75-90"											√	
	90-end									P @ 91 - End	1	√	

RT Technician:	Gordon Thomas	CGSB Level:	II	Reg. # :	6	SNT-TC-1A Level:	III	SNT-TC-1A No:	6
RT Assistant # 1	Jasdeep Singh			CEDO #:	17879	SNT-TC-1A Level:	II	SNT-TC-1A No:	17879
RT Assistant # 2	Craig Anderson			CEDO #:	Trainee	SNT-TC-1A Level:	-	SNT-TC-1A No:	Trainee

Technician Signature — August 8/13 (Date)

ANDREW NGO
QUALITY CONTROL
TEL: 780-955-2040
Client Representative Signature

AUG 0 8 2013
Evaluation Date

The above interpretation is a technical opinion, not a guarantee.
Client signature indicates acceptance of the report and results.

Clock tape marker and start arrow marked on weldment.
It is the customer's responsibility to map welds on drawings.

Film Make / Brand	AGFA	Film Class - Type:	2-D7
Screens Lead	Front 0.010	Back 0.010	One (no.) film per screen
Film Density:	Min. 2.0	Max. 4.0	
Penetrometer (IQI hole type) designation:	N/A	Recommended Max. U.G.:	0.20
Source Isotope:	IRIDIUM-192(Gamma)	Wall Viewing:	Single
Effective Focal Spot Size:	0.118 inches	Processing:	Automatic

RADIOGRAPHIC EXAMINATION REPORT

RADIOGRAPHIC EXAMINATION TECHNIQUE REFERENCE SHEET

ALL CAN INSPECTION SERVICES (2011) INC. RT TECHNIQUES
ALL CAN INSPECTION SERVICES (2011) INC. GENERAL RT PROCEDURE
Important Note: Always check the QA/Procedures Manual for the most current Procedure Revision status.

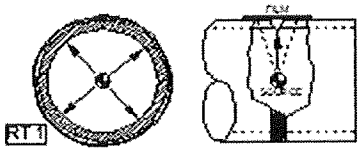

Tech #RT-1: Vessel Circumferential Weld
1 Exposure: QA Subsection 15.12.1

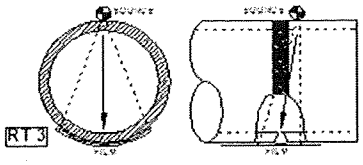

Tech #RT-3: Circ. Weld – Contact – Light Wall
3 Exposures@120° Spacing: QA Subsection 15.12.6

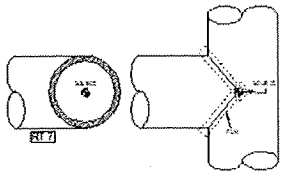

Tech #RT-7: Mitered "T" Joint - Single Wall - Source centered
Exposures as required: *QA Subsection 15.12.11*

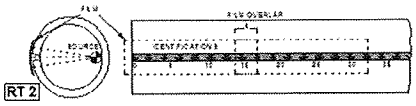

Tech #RT-2: Long. Weld - Light Wall – Source Inside
1 Exposure/15 inches: *QA Subsection 15.12.2*

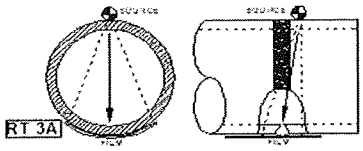

Tech #RT-3A: Circ. Weld – Contact – Heavy Wall
4 Exposures@90° Spacing: *QA Subsection 15.12.7*

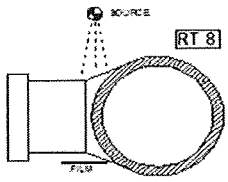

Tech #RT-8:Category "D" Weld
Exposures as required: *QA Subsection 15.12.12*

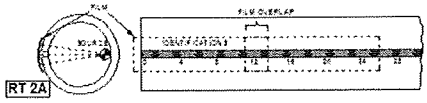

Tech #RT-2A: Long. Weld - Heavy Wall – Source Inside
1 Exposure/12 inches: *QA Subsection 15.12.3*

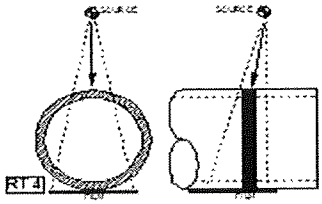

Tech #RT-4: Circ. Weld – Dbl Wall – Ellipse
2 Exposures@90° Spacing: QA Subsection 15.12.8

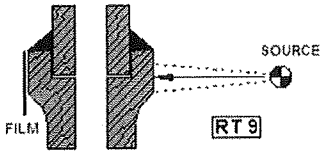

Tech #RT-9: Gap Check
1 Exposure: *QA Subsection 15.12.13*

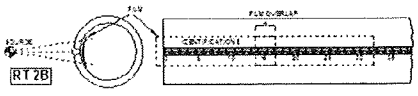

Tech #RT-2B: Long. Weld – Light Wall – Source Outside
1 Exposure/15 inches: *QA Subsection 15.12.4*

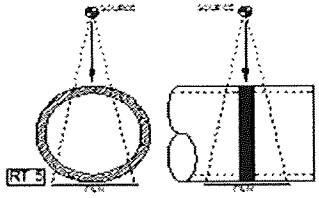

Tech #RT-5: Circ. Weld – Double Wall – Superimposed
3 Exposures@60° Spacing: QA Subsection 15.12.9

Penetrameter (IQI) Reference

1. ASTM A
2. ASTM B
3. ASTM C
4. FEEN/EN-462

5. DIN/EN-462 Set/Size 1 (Wire range 1 - 7)
6. DIN/EN 462 Set/Size 6 (Wire range 6 - 12)
7. DIN/EN-462 Set/Size 10 (Wire range 10 - 16)
8. DIN/EN-462 Set/Size 13 (Wire range 13 - 19)

9. Hole Type: Indicate IQI Designation Number

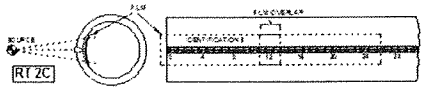

Tech #RT-2C: Long. Weld – Heavy Wall – Source Outside
1 Exposure/12 inches: *QA Subsection 15.12.5*

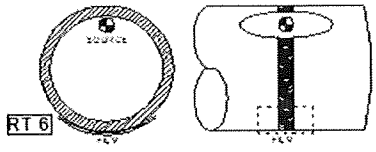

Tech #RT-6: Circumferential Weld - Source not Centered
Exposures as required: *QA Subsection 15.12.10*

COMMENTS

ALL CAN INSPECTION SERVICES (2011) INC.

Report # C4715

9323-37 Avenue, NW, Edmonton, Albert T6E 5N4
SHOP # 780-462-1072, **OFFICE #** 780-462-9797, **FAX #** 780-462-4664
EMAIL: shop@allcaninspection.com

Client:	**5BLUE PROCESS**		Client Job #	**5B1108-20**	
Address:	Nisku		P.O. #		
Contact:	Name:	Andrew Ngo/Joelle Dery-Brochu	Date:	**Aug. 2/13**	
	Phone:	780-955-2040 **Ext:** 227/241			
Work Location:	Fab Shop Nisku		Work Description:		

CODES
1. ASME B31.3 N/C
2. ASME B31.3 S/C
3. ASME Sec. VIII Div 1 UW51
4. ASME Sec. VIII Div. 1 UW52
5. CSA Z662
6. CSA Z662 (Sour)
7. API 650
8. Shot to Z662,Interp. B31.3N

LF - Lack of Fusion; IP - Incomplete Penetration; IC - Internal Concavity; BT - Burn Through; TI - Tungsten Inclusion; IU: Internal Undercut; EU: External Undercut; EP - Excessive Penetration; P - Porosity; S - Slag; HL - High-Low; C - Crack; AB - Arc Burn; HB - Hollow Bead

Severity: 1 = Slight, 2 = Medium, 3 = Severe (Reject)

NDE No:	Size & thickness Plus Code Max. reinforcement	Material	Code (1-8)	IQI (See Back)	Technique Number (See Back)	Source Side of Object to Film Distance (Inches)	Source to Object Distance (Inches)	Number of Exposures	Welder ID	Discontinuity	Severity (1-3)	Accept	Reject
N3X1	4" s80	P1	1	2	RT-2	1.125	25.000	1	C			√	
N4X1	2" s160	P1	1	2	RT-3A	0.343	2.531	4	C			√	
N4X2	2" s160	P1	1	2	RT-3A	0.343	2.531	4	C			√	
N4X3	2" s160	P1	1	2	RT-3A	0.343	2.531	4	C			√	

RT Technician:	Gordon Thomas	CGSB Level:	II	Reg. # :	6	SNT-TC-1A Level:	III	SNT-TC-1A No:	6
RT Assistant # 1	Matthew Frawley			CEDO #:	16814	SNT-TC-1A Level:	II	SNT-TC-1A No:	16814
RT Assistant # 2	Laurent Richer			CEDO #:	Trainee	SNT-TC-1A Level:	-	SNT-TC-1A No:	Trainee

Technician Signature — Aug. 2/13 — Date

ANDREW NGO
QUALITY CONTROL
TEL: 780-955-2040
Client Representative Signature

AUG 0 2 2013
Evaluation Date

The above interpretation is a technical opinion, not a guarantee.
Client signature indicates acceptance of the report and results.

Clock tape marker and start arrow marked on weldment.
It is the customer's responsibility to map welds on drawings.

Film Make / Brand	AGFA	Film Class / Type:	1-D4/D5
Screens Lead	Front 0.010	Back 0.010	One (no.) film per screen
Film Density:	Min. 2.0	Max. 4.0	
Penetrometer (IQI hole type) designation:	N/A	Recommended Max. U.G.:	0.20
Source Isotope:	IRIDIUM-192(Gamma)	Wall Viewing:	Single
Effective Focal Spot Size:	0.118 inches	Processing:	Automatic

RADIOGRAPHIC EXAMINATION REPORT

RADIOGRAPHIC EXAMINATION TECHNIQUE REFERENCE SHEET

ALL CAN INSPECTION SERVICES (2011) INC. RT TECHNIQUES
ALL CAN **INSPECTION SERVICES (2011) INC. GENERAL RT PROCEDURE**
Important Note: Always check the QA/Procedures Manual for the most current Procedure Revision status.

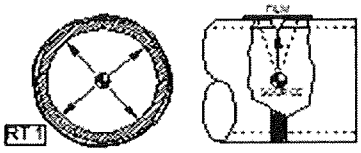

Tech #RT-1: Vessel Circumferential Weld
1 Exposure: QA Subsection 15.12.1

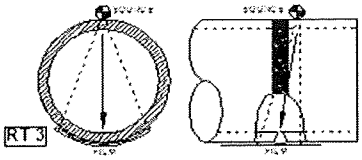

Tech #RT-3: Circ. Weld – Contact – Light Wall
3 Exposures@120° Spacing: QA Subsection 15.12.6

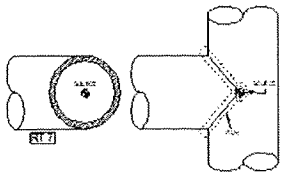

Tech #RT-7: Mitered "T" Joint - Single Wall - Source centered
Exposures as required: *QA Subsection 15.12.11*

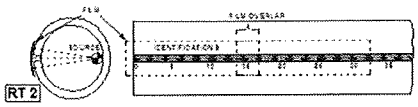

Tech #RT-2: Long. Weld - Light Wall – Source Inside
1 Exposure/15 Inches: *QA Subsection 15.12.2*

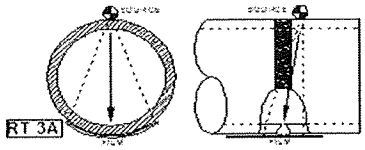

Tech #RT-3A: Circ. Weld – Contact – Heavy Wall
4 Exposures@90° Spacing: *QA Subsection 15.12.7*

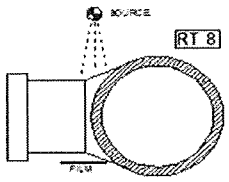

Tech #RT-8:Category "D" Weld
Exposures as required: *QA Subsection 15.12.12*

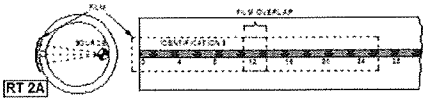

Tech #RT-2A: Long. Weld - Heavy Wall – Source Inside
1 Exposure/12 Inches: *QA Subsection 15.12.3*

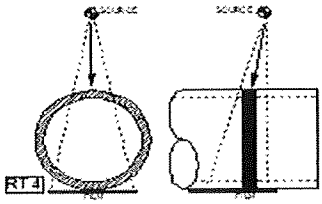

Tech #RT-4: Circ. Weld – Dbl Wall – Ellpse
2 Exposures@90° Spacing: QA Subsection 15.12.8

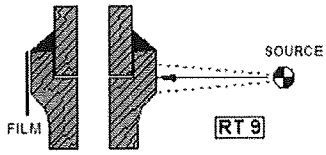

Tech #RT-9: Gap Check
1 Exposure: *QA Subsection 15.12.13*

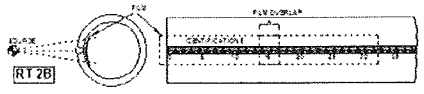

Tech #RT-2B: Long. Weld – Light Wall – Source Outside
1 Exposure/15 Inches: *QA Subsection 15.12.4*

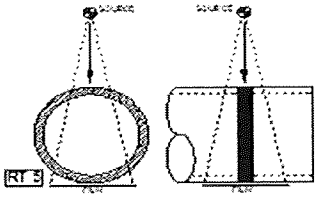

Tech #RT-5: Circ. Weld – Double Wall – Superimposed
3 Exposures@60° Spacing: QA Subsection 15.12.9

Penetrameter (IQI) Reference

1. ASTM A
2. ASTM B
3. ASTM C
4. FEEN/EN-462

5. DIN/EN-462 Set/Size 1 (Wire range 1 - 7)
6. DIN/EN 462 Set/Size 6 (Wire range 6 - 12)
7. DIN/EN-462 Set/Size 10 (Wire range 10 - 16)
8. DIN/EN-462 Set/Size 13 (Wire range 13 - 19)

9. Hole Type: Indicate IQI Designation Number

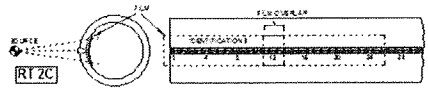

Tech #RT-2C: Long. Weld – Heavy Wall – Source Outside
1 Exposure/12 Inches: *QA Subsection 15.12.5*

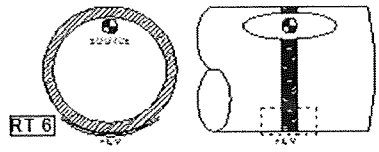

Tech #RT-6: Circumferential Weld - Source not Centered
Exposures as required: *QA Subsection 15.12.10*

COMMENTS

ALL CAN INSPECTION SERVICES (2011) INC.

Report # C5099

9323-37 Avenue, NW, Edmonton, Albert T6E 5N4
SHOP # 780-462-1072, OFFICE # 780-462-9797, FAX # 780-462-4664
EMAIL: shop@allcaninspection.com

Client: **5Blue Process** Client Job # **5B1108-20**
Address: 2303-8th St., Nisku, AB., T9E 7Z3 P.O. #
Contact: Name: Joelle Dery-Brochu/ Andrew Ngo Date: **AUG 26/13**
Phone: 780-955-2040 Ext: 241/227
Work Location: Fab Shop Nisku Work Description:

CODES
1. ASME B31.3 N/C
2. ASME B31.3 S/C
3. ASME Sec. VIII Div 1 UW51
4. ASME Sec. VIII Div. 1 UW52
5. CSA Z662
6. CSA Z662 (Sour)
7. API 650
8. CWB

NDE No:	Size & thickness Plus Code Max. reinforcement	Material	Code (1-8)	IQI (See Back)	Technique Number (See Back)	Source Side of Object to Film Distance (Inches)	Source to Object Distance (Inches)	Number of Exposures	Welder ID	Discontinuity (LF - Lack of Fusion; IP - Incomplete Penetration; IC - Internal Concavity; BT - Burn Through; TI - Tungsten Inclusion; IU: Internal Undercut; EU: External Undercut; EP - Excessive Penetration; P - Porosity; S - Slag; HL - High-Low; C - Crack; AB - Arc Burn; HB - Hollow Bead)	Severity (1 = Slight, 2 = Medium, 3 = Severe (Reject)) (1-3)	Accept	Reject
CS1	67.25" OD X 5/8"	P1	3	2	RT-1	0.750	33.000	1	U/X				
	0 - 15"											√	
	15 - 30"									P @ 16"	1	√	
	30 - 45"											√	
	45 - 60"											√	
	60 - 75"											√	
	75 - 90"											√	
	90 - 105"									MIG POR @ 100"	3		X
	105 - 120"									MIG POR @ 106 - 112"	3		X
	120- 135"									MIG POR @ 123 - 135"	3		X
	135 - 150"									MIG POR @ 135 - 146"	3		X
	150 - 165"											√	
	165 - 180"											√	
	180 - 195"											√	
	195 - 200"											√	
	200 - 0"											√	

RT Technician: Gordon Thomas CGSB Level: II Reg. #: 6 SNT-TC-1A Level: III SNT-TC-1A No: 6
RT Assistant # 1: Matthew Frawley CEDO #: 16814 SNT-TC-1A Level: II SNT-TC-1A No: 16814
RT Assistant # 2: Laurent Richer CEDO #: Trainee SNT-TC-1A Level: - SNT-TC-1A No: Trainee

Technician Signature — Date: AUG 26/13

JOELLE DERY-BROCHU
QUALITY CONTROL
(780)955-2040 P241
Client Representative Signature — Evaluation Date: Aug 26/13

The above interpretation is a technical opinion, not a guarantee.
Client signature indicates acceptance of the report and results.

Clock tape marker and start arrow marked on weldment.
It is the customer's responsibility to map welds on drawings.

Film Make / Brand: AGFA Film Class - Type: 2-D7
Screens Lead: Front 0.010 Back 0.010 One (no.) film per screen
Film Density: Min. 2.0 Max. 4.0
Penetrometer (IQI hole type) designation: N/A Recommended Max. U.G.: 0.20
Source Isotope: IRIDIUM-192(Gamma) Wall Viewing: Single
Effective Focal Spot Size: 0.118 inches Processing: Automatic

RADIOGRAPHIC EXAMINATION REPORT

RADIOGRAPHIC EXAMINATION TECHNIQUE REFERENCE SHEET

ALL CAN INSPECTION SERVICES (2011) INC. RT TECHNIQUES
ALL CAN INSPECTION SERVICES (2011) INC. GENERAL RT PROCEDURE
Important Note: Always check the QA/Procedures Manual for the most current Procedure Revision status.

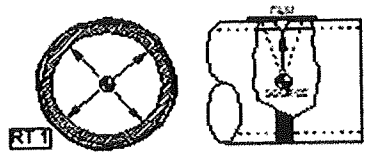

Tech #RT-1: Vessel Circumferential Weld
1 Exposure: QA Subsection 15.12.1

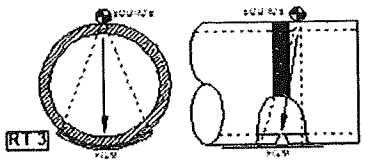

Tech #RT-3: Circ. Weld – Contact – Light Wall
3 Exposures@120° Spacing: QA Subsection 15.12.6

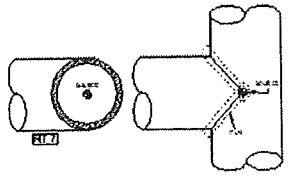

Tech #RT-7: Mitered "T" Joint - Single Wall - Source centered
Exposures as required: *QA Subsection 15.12.11*

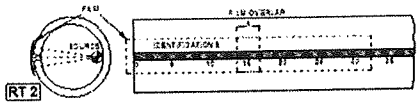

Tech #RT-2: Long. Weld - Light Wall – Source Inside
1 Exposure/15 Inches: *QA Subsection 15.12.2*

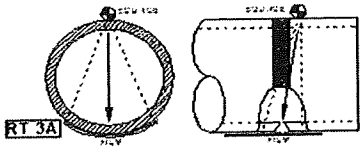

Tech #RT-3A: Circ. Weld – Contact – Heavy Wall
4 Exposures@90° Spacing: *QA Subsection 15.12.7*

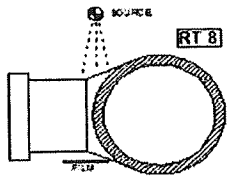

Tech #RT-8:Category "D" Weld
Exposures as required: *QA Subsection 15.12.12*

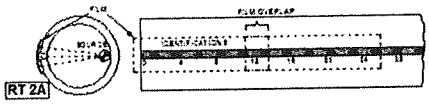

Tech #RT-2A: Long. Weld - Heavy Wall – Source Inside
1 Exposure/12 Inches: *QA Subsection 15.12.3*

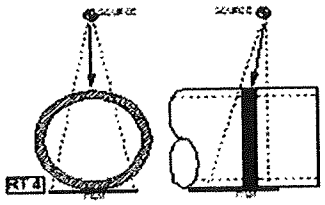

Tech #RT-4: Circ. Weld – Dbl Wall – Ellipse
2 Exposures@90° Spacing: QA Subsection 15.12.8

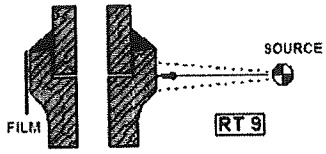

Tech #RT-9: Gap Check
1 Exposure: *QA Subsection 15.12.13*



Tech #RT-2B: Long. Weld – Light Wall – Source Outside
1 Exposure/15 Inches: *QA Subsection 15.12.4*

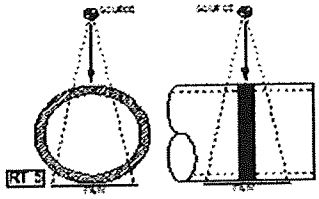

Tech #RT-5: Circ. Weld – Double Wall – Superimposed
3 Exposures@60° Spacing: QA Subsection 15.12.9

Penetrameter (IQI) Reference

1. ASTM A
2. ASTM B
3. ASTM C
4. FEEN/EN-462

5. DIN/EN-462 Set/Size 1 (Wire range 1 - 7)
6. DIN/EN 462 Set/Size 6 (Wire range 6 - 12)
7. DIN/EN-462 Set/Size 10 (Wire range 10 - 16)
8. DIN/EN-462 Set/Size 13 (Wire range 13 - 19)

9. Hole Type: Indicate IQI Designation Number

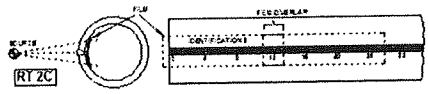

Tech #RT-2C: Long. Weld – Heavy Wall – Source Outside
1 Exposure/12 Inches: *QA Subsection 15.12.5*

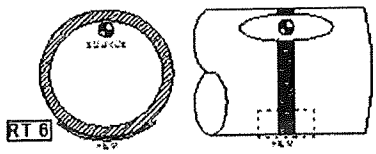

Tech #RT-6: Circumferential Weld - Source not Centered
Exposures as required: *QA Subsection 15.12.10*

COMMENTS

ALL CAN INSPECTION SERVICES (2011) INC.

Report # C5100

9323-37 Avenue, NW, Edmonton, Albert T6E 5N4
SHOP # 780-462-1072, OFFICE # 780-462-9797, FAX # 780-462-4664
EMAIL: shop@allcaninspection.com

Client: **5Blue Process** Client Job # **5B1108-20**

Address: 2303-8th St., Nisku, AB., T9E 7Z3 P.O. #

Contact: Name: Joelle Dery-Brochu/ Andrew Ngo Date: **AUG 26/13**

Phone: 780-955-2040 Ext: 241/227

Work Location: Fab Shop Nisku Work Description:

CODES
1. ASME B31.3 N/C
2. ASME B31.3 S/C
3. ASME Sec. VIII Div 1 UW51
4. ASME Sec. VIII Div. 1 UW52
5. CSA Z662
6. CSA Z662 (Sour)
7. API 650
8. CWB

LF - Lack of Fusion; IP - Incomplete Penetration; IC - Internal Concavity; BT - Burn Through; TI - Tungsten Inclusion; IU: Internal Undercut; EU: External Undercut; EP - Excessive Penetration; P - Porosity; S - Slag; HL - High-Low; C - Crack; AB - Arc Burn; HB - Hollow Bead

Severity: 1 = Slight, 2 = Medium, 3 = Severe (Reject)

NDE No:	Size & thickness Plus Code Max. reinforcement	Material	Code 1-8	IQI See Back	Technique Number See Back	Source Side of Object to Film Distance Inches	Source to Object Distance Inches	Number of Exposures	Welder ID	Discontinuity	Severity 1-9	Accept	Reject
CS2	67.25" OD X 5/8"	P1	3	2	RT-1	0.750	33.000	1	U/X				
	0 - 15"											√	
	15 - 30"											√	
	30 - 45"									IU & LF @ 41 - 45"	3		X
	45 - 60"											√	
	60 - 75"									P @ 64"	1	√	
	75 - 90"											√	
	90 - 105"									P @ 91"	1	√	
	105 - 120"											√	
	120- 135"									IU @ 125"	2	√	
	135 - 150"									LF @ 140 1/2" - 142"	3		X
	150 - 165"									LF @ 162"	3		X
	165 - 180"									IU @ 178" & 179"	1	√	
	180 - 195"									IU @ 186"	1	√	
	195 - 200"									LF @ 196"	3		X
	200 - 0"											√	

RT Technician: Gordon Thomas CGSB Level: II Reg. #: 6 SNT-TC-1A Level: III SNT-TC-1A No: 6

RT Assistant # 1: Matthew Frawley CEDO #: 16814 SNT-TC-1A Level: II SNT-TC-1A No: 16814

RT Assistant # 2: Laurent Richer CEDO #: Trainee SNT-TC-1A Level: - SNT-TC-1A No: Trainee

Technician Signature — Date: AUG 26/13

Client Representative Signature: JOELLE DERY-BROCHU QUALITY CONTROL (780)955-2040 EXT 241 — Evaluation Date: AUG 26/13

The above interpretation is a technical opinion, not a guarantee.
Client signature indicates acceptance of the report and results.

Clock tape marker and start arrow marked on weldment.
It is the customer's responsibility to map welds on drawings.

Film Make / Brand: AGFA Film Class - Type: 2-D7

Screens Lead: Front 0.010 Back 0.010 One (no.) film per screen

Film Density: Min. 2.0 Max. 4.0

Penetrometer (IQI hole type) designation: N/A Recommended Max. U.G.: 0.20

Source Isotope: IRIDIUM-192(Gamma) Wall Viewing: Single

Effective Focal Spot Size: 0.118 inches Processing: Automatic

RADIOGRAPHIC EXAMINATION REPORT

RADIOGRAPHIC EXAMINATION TECHNIQUE REFERENCE SHEET

ALL CAN INSPECTION SERVICES (2011) INC. RT TECHNIQUES
ALL CAN INSPECTION SERVICES (2011) INC. GENERAL RT PROCEDURE
Important Note: Always check the QA/Procedures Manual for the most current Procedure Revision status.

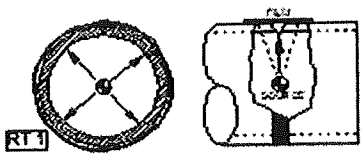

Tech #RT-1: Vessel Circumferential Weld
1 Exposure: QA Subsection 15.12.1

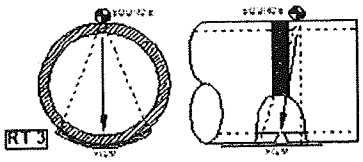

Tech #RT-3: Circ. Weld – Contact – Light Wall
3 Exposures@120° Spacing: QA Subsection 15.12.6

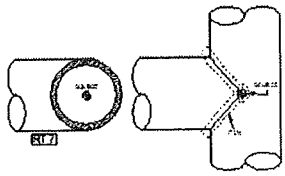

Tech #RT-7: Mitered "T" Joint - Single Wall - Source centered
Exposures as required: *QA Subsection 15.12.11*

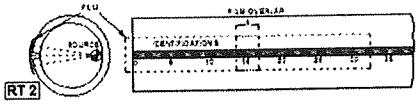

Tech #RT-2: Long. Weld - Light Wall – Source Inside
1 Exposure/15 Inches: *QA Subsection 15.12.2*

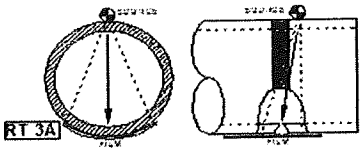

Tech #RT-3A: Circ. Weld – Contact – Heavy Wall
4 Exposures@90° Spacing: *QA Subsection 15.12.7*

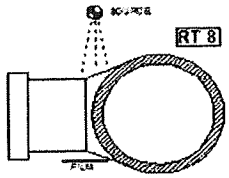

Tech #RT-8:Category "D" Weld
Exposures as required: *QA Subsection 15.12.12*

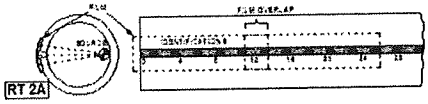

Tech #RT-2A: Long. Weld - Heavy Wall – Source Inside
1 Exposure/12 Inches: *QA Subsection 15.12.3*

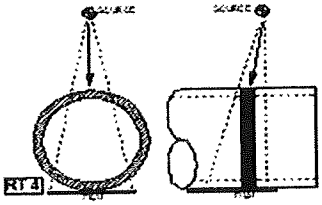

Tech #RT-4: Circ. Weld – Dbl Wall – Elipse
2 Exposures@90° Spacing: QA Subsection 15.12.8

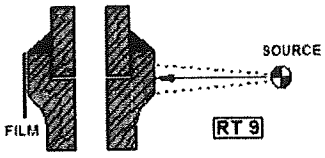

Tech #RT-9: Gap Check
1 Exposure: *QA Subsection 15.12.13*



Tech #RT-2B: Long. Weld – Light Wall – Source Outside
1 Exposure/15 Inches: *QA Subsection 15.12.4*

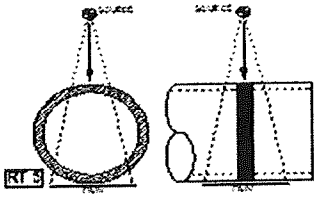

Tech #RT-5: Circ. Weld – Double Wall – Superimposed
3 Exposures@60° Spacing: QA Subsection 15.12.9

Penetrameter (IQI) Reference

1. ASTM A
2. ASTM B
3. ASTM C
4. FEEN/EN-462

5. DIN/EN-462 Set/Size 1 (Wire range 1 - 7)
6. DIN/EN 462 Set/Size 6 (Wire range 6 - 12)
7. DIN/EN-462 Set/Size 10 (Wire range 10 - 16)
8. DIN/EN-462 Set/Size 13 (Wire range 13 - 19)

9. Hole Type: Indicate IQI Designation Number

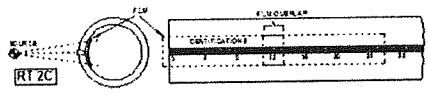

Tech #RT-2C: Long. Weld – Heavy Wall – Source Outside
1 Exposure/12 Inches: *QA Subsection 15.12.5*

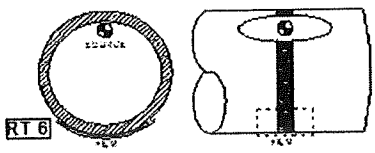

Tech #RT-6: Circumferential Weld - Source not Centered
Exposures as required: *QA Subsection 15.12.10*

COMMENTS

ALL CAN INSPECTION SERVICES (2011) INC.

Report # C5101

9323-37 Avenue, NW, Edmonton, Albert T6E 5N4
SHOP # 780-462-1072, OFFICE # 780-462-9797, FAX # 780-462-4664
EMAIL: shop@allcaninspection.com

Client: 5Blue Process
Address: 2303-8th St., Nisku, AB., T9E 7Z3
Contact: Name: Joelle Dery-Brochu/ Andrew Ngo
Phone: 780-955-2040 Ext: 241/227
Work Location: Fab Shop Nisku

Client Job # 5B1108-20
P.O. #
Date: AUG 26/13
Work Description:

CODES
1. ASME B31.3 N/C
2. ASME B31.3 S/C
3. ASME Sec. VIII Div 1 UW51
4. ASME Sec. VIII Div. 1 UW52
5. CSA Z662
6. CSA Z662 (Sour)
7. API 650
8. CWB

LF - Lack of Fusion; IP - Incomplete Penetration; IC - Internal Concavity; BT - Burn Through; TI - Tungsten Inclusion; IU: Internal Undercut; EU: External Undercut; EP - Excessive Penetration; P - Porosity; S - Slag; HL - High-Low; C - Crack; AB - Arc Burn; HB - Hollow Bead

NDE No:	Size & thickness Plus Code Max. reinforcement	Material	Code (1-8)	IQI (See Back)	Technique Number (See Back)	Source Side of Object to Film Distance (Inches)	Source to Object Distance (Inches)	Number of Exposures	Welder ID	Discontinuity (Severity: 1 = Slight, 2 = Medium, 3 = Severe (Reject))	Severity (1-3)	Accept	Reject
CS3	67.25" OD X 5/8"	P1	3	2	RT-1	0.750	33.000	1	U/X				
	0 - 15"											√	
	15 - 30"									film mark @ 22"		√	
	30 - 45"											√	
	45 - 60"											√	
	60 - 75"											√	
	75 - 90"									P @ 82", 83" & 84"	1	√	
	90 - 105"									P @ 96"	1	√	
	105 - 120"											√	
	120 - 135"											√	
	135 - 150"											√	
	150 - 165"											√	
	165 - 180"											√	
	180 - 195"											√	
	195 - 200"											√	
	200 - 0"											√	

RT Technician: Gordon Thomas — CGSB Level: II — Reg. #: 6 — SNT-TC-1A Level: III — SNT-TC-1A No: 6
RT Assistant # 1: Matthew Frawley — CEDO #: 16814 — SNT-TC-1A Level: II — SNT-TC-1A No: 16814
RT Assistant # 2: Laurent Richer — CEDO #: Trainee — SNT-TC-1A Level: - — SNT-TC-1A No: Trainee

Technician Signature — Date: AUG 26/13

JOELLE DERY-BROCHU — Client Representative Signature — Evaluation Date: Aug 26/13

QUALITY CONTROL
(780)955-2040 ext 241

The above interpretation is a technical opinion, not a guarantee.
Client signature indicates acceptance of the report and results.

Clock tape marker and start arrow marked on weldment.
It is the customer's responsibility to map welds on drawings.

Film Make / Brand: AGFA — Film Class - Type: 2-D7
Screens: Lead — Front: 0.010 — Back: 0.010 — One (no.) film per screen
Film Density: Min. 2.0 — Max. 4.0
Penetrometer (IQI hole type) designation: N/A — Recommended Max. U.G.: 0.20
Source Isotope: IRIDIUM-192(Gamma) — Wall Viewing: Single
Effective Focal Spot Size: 0.118 inches — Processing: Automatic

RADIOGRAPHIC EXAMINATION REPORT

RADIOGRAPHIC EXAMINATION TECHNIQUE REFERENCE SHEET

ALL CAN INSPECTION SERVICES (2011) INC. RT TECHNIQUES
ALL CAN INSPECTION SERVICES (2011) INC. GENERAL RT PROCEDURE
Important Note: Always check the QA/Procedures Manual for the most current Procedure Revision status.

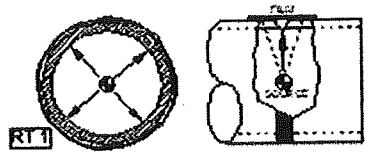

Tech #RT-1: Vessel Circumferential Weld
1 Exposure: QA Subsection 15.12.1

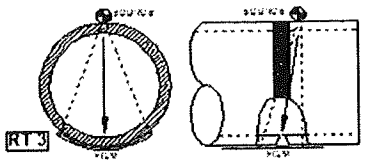

Tech #RT-3: Circ. Weld – Contact – Light Wall
3 Exposures@120° Spacing: QA Subsection 15.12.6

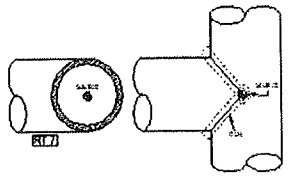

Tech #RT-7: Mitered "T" Joint - Single Wall - Source centered
Exposures as required: *QA Subsection 15.12.11*

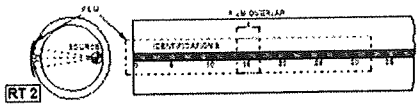

Tech #RT-2: Long. Weld - Light Wall – Source Inside
1 Exposure/15 Inches: *QA Subsection 15.12.2*

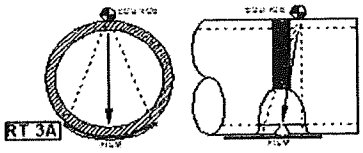

Tech #RT-3A: Circ. Weld – Contact – Heavy Wall
4 Exposures@90° Spacing: *QA Subsection 15.12.7*

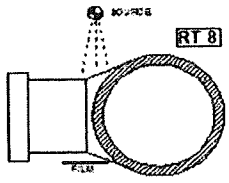

Tech #RT-8:Category "D" Weld
Exposures as required: *QA Subsection 15.12.12*

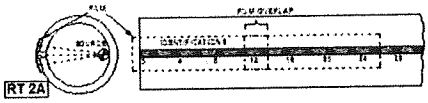

Tech #RT-2A: Long. Weld - Heavy Wall – Source Inside
1 Exposure/12 Inches: *QA Subsection 15.12.3*

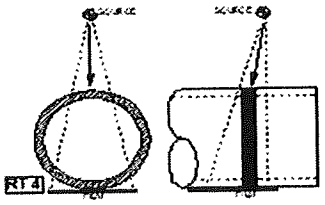

Tech #RT-4: Circ. Weld – Dbl Wall – Ellipse
2 Exposures@90° Spacing: QA Subsection 15.12.8

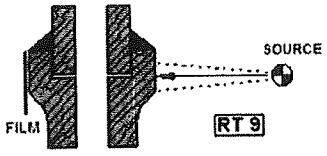

Tech #RT-9: Gap Check
1 Exposure: *QA Subsection 15.12.13*

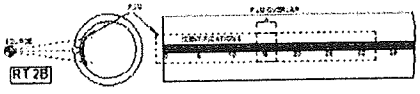

Tech #RT-2B: Long. Weld – Light Wall – Source Outside
1 Exposure/15 Inches: *QA Subsection 15.12.4*

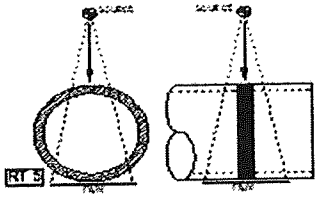

Tech #RT-5: Circ. Weld – Double Wall – Superimposed
3 Exposures@60° Spacing: QA Subsection 15.12.9

Penetrameter (IQI) Reference

1. ASTM A
2. ASTM B
3. ASTM C
4. FEEN/EN-462

5. DIN/EN-462 Set/Size 1 (Wire range 1 - 7)
6. DIN/EN 462 Set/Size 6 (Wire range 6 - 12)
7. DIN/EN-462 Set/Size 10 (Wire range 10 - 16)
8. DIN/EN-462 Set/Size 13 (Wire range 13 - 19)

9. Hole Type: Indicate IQI Designation Number

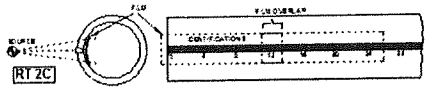

Tech #RT-2C: Long. Weld – Heavy Wall – Source Outside
1 Exposure/12 Inches: *QA Subsection 15.12.5*

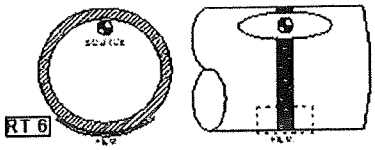

Tech #RT-6: Circumferential Weld - Source not Centered
Exposures as required: *QA Subsection 15.12.10*

COMMENTS

5Blue
Process Equipment Inc.

B6 Magnetic Particle Inspection Reports

2303-8th Street, Nisku Alberta, T9E-7Z3 CANADA

CUSTOM PIPE SERVICES INC.

6101 - 46A Street Leduc, AB T9E 7A6
Bus: 780-986-5066 Fax: 780-986-8520 Email: info@cpsinspection.com

Non-Destructive Test Report

Report: 3N 3644 Page: 1 of 1
Date: 11-Dec-13 Time: 2:00 am / pm

Customer: 5Blue Process Equipment Inc. Job Number: 5B1108-80
Location: 2303-8th Street - Nisku, Alberta Reported to: Joelle Dery-Brochu
Project: Colour Contrast Magnetic Particle Examination on Spooling Purchase Order :

NDT METHOD

MAGNETIC PARTICLE

Equipment: Parker B300 S/N: 19750
Calibration Due Date: 10 - May - 14
AC: _____ x _____ Yoke: x Coil: _____
Continuous: x Dry: _____ Wet: x
Particles: Magnaflux 7HF Color Contrast: Magnaflux WCP-2
Fluorescent: no Sensitivity: man.

LIQUID PENETRANT

Penetrant: _____ D/T: _____
Developer: _____ D/T: _____
Dye: _____ Fluorescent: _____
Water Wash: _____
Temperature: _____

Light Source: Y-300 Yoke Bulb Black Light (µW): n/a White Light (fc): > 100 fc @ surface
PROCEDURE CODE: ASME Sec. V Art 7. C.P.S.: MT-2V Rev. 4 ACCEPTANCE CODE: ASME B31.3N
PROCEDURE CUSTOMER: _____ ACCEPTANCE CUSTOMER: _____
Before PWHT: x After PWHT: _____ Before Hydro: x After Hydro: _____
Material: P1 as welded: x painted: _____ machined: _____ as cleaned: x
Material Thickness: _____ Pipe Thickness: 0.200"
DESCRIPTION OF INSPECTION:
A black on white colour contrast magnetic particle examination was done on the following welds:

Control Number	Weld Number	Type	Size	Class	Welder	Weld I.D.
15A	3	SW	1½" XS	A11a	M	15A-3
15A	4	SW	1½" XS	A11a	M	15A-4
16A	2	SW	1½" XS	A11a	O	16A-2
16A	5	SW	1½" XS	A11a	O	16A-5

RESULTS:

No rejectable indications were noted. Acceptable to ASME B31.3 Normal.

CONSUMABLES USED: 1 can

Operator: S. Robinson Signature: 11-Dec-13 CGSB Level: II# 15266 SNT Level: II
Assistant: C. Webster CGSB Level: II SNT Level: II Man Crew: 2 man Hours Reg.: ½ hour
Client Representative: _____ Mileage: _____ Hours O.T.: _____

AARRON SUBCHUK
QUALITY CONTROL
TEL : 780-955-2040

CUSTOM PIPE SERVICES INC.

6101 - 46A Street Leduc, AB T9E 7A6
Bus: 780-986-5066 Fax: 780-986-8520 Email: info@cpsinspection.com

Non-Destructive Test Report

Report: 5N2740 Page: 1 of 1
Date: 12-Sep-13 Time: ____ am pm

Customer: 5-Blue
Job Number: 1108-80
Location: Nisku
Reported to: Joelle
Project: MT Piping
Purchase Order :

NDT METHOD

MAGNETIC PARTICLE

Equipment: Parker B-300 S/N: 8530
Calibration Due Date: Dec-13
AC: x DC: Yoke: x Coil:
Continuous: x Dry: Wet: x
Particles: 7HF Color Contrast: WCP-2
Fluorescent: Sensitivity:

LIQUID PENETRANT

Penetrant: D/T:
Developer: D/T:
Dye: red Fluorescent:
Water Wash:
Temperature:

Light Source: flashlight Black Light (µW): White Light (fc): 100+
PROCEDURE CODE: Asme Sec. V Art. 7 C.P.S.: MT-2V Rev. 4 ACCEPTANCE CODE: Asme B31.3
PROCEDURE CUSTOMER: ACCEPTANCE CUSTOMER:
Before PWHT: x After PWHT: Before Hydro: X After Hydro:
Material: P1 as welded: x painted: machined: as cleaned: x
DESCRIPTION OF INSPECTION: A black on white magnetic particle inspection was carried out piping welds listed:

Control #	Weld#	Type	Size	Class	Welder	Weld I.D		
2G	13	FW	0.75"3M	A11	J	2G-13		
3C	3	FW	1" 3M	A11	Z	3C-3		
4B	4	FW	1" 3M	A11	C	4B-4		
7C	13	FW	0.75" 3M	A11	C	7C-13		
13A	2	FW	0.75" 3M	A11	J	13A-2		

RESULTS: No indications noted at time of inspection.

CONSUMABLES USED: 2 cans

Operator: John Van Leest Signature: CGSB Level: II#6567 SNT Level: II
Assistant: Dennis G CGSB Level: SNT Level: Man Crew: 1 Hours Reg.: 1/2
Client Representative: Mileage: Hours O.T.:

ANDREW NGO
QUALITY CONTROL
TEL:780-955-2040

SEP 12 2013

CUSTOM PIPE SERVICES INC.

6101 - 46A Street Leduc, AB T9E 7A6
Bus: 780-986-5066 Fax: 780-986-8520 Email: info@cpsinspection.com

Non-Destructive Test Report

Report: 7N 2667 Page: 1 of 1
Date: Sept 09/2013 Time: pm am pm

Customer: 5 Blue Job Number: 1108-80
Location: Nisku, Ab Reported to: Joelle
Project: MPI Purchase Order :

NDT METHOD

MAGNETIC PARTICLE

Equipment: Parker B300 S/N: 17663
Calibration Due Date: Nov 06/2013
AC: x DC: Yoke: x Coil:
Continuous: x Dry: x Wet:
Particles: 7HF Color Contrast: WCP-2
Fluorescent: Sensitivity:

LIQUID PENETRANT

Penetrant: D/T:
Developer: D/T:
Dye: Fluorescent:
Water Wash:
Temperature:

Light Source: 100W Black Light (W): White Light (f/c): 100
PROCEDURE CODE: ASME Sec V Art 7 C.P.S.: MT-2V-Rev 4 ACCEPTANCE CODE: ASME Sec VIII App 6
PROCEDURE CUSTOMER: ACCEPTANCE CUSTOMER: ASME B31.3
Before PWHT: x After PWHT: Before Hydro: x After Hydro:
Material: P1 Welded x painted: machined: as cleaned: x
Material Thickness: —
DESCRIPTION OF INSPECTION: A black on white mpi was carried out on 100% on following weld items. As per client request.

Qty	Part Description	Spool #
1	Socket Weld	9A
1	Socket Weld	10A

RESULTS: No relevant indication noted at time of final inspection. Acceptable to code.

CONSUMABLES USED: 1/2 Can

Operator: Shahzad aslam Signature: CGSB Level: II#12786 SNT Level: II
Assistant: Javed & Chris CGSB Level: SNT Level: Man Crew: 2 Hours Reg.: 1/2 hr
Mileage: Hours O.T.:

JOELLE DERY-BROCHU
QUALITY CONTROL
(780)955-2040 E:241

CUSTOM PIPE SERVICES INC.

6101 - 46A Street Leduc, AB T9E 7A6
Bus: 780-986-5066 Fax: 780-986-8520 Email: info@cpsinspection.com

Non-Destructive Test Report

Report: 7N 2666 Page: 1 of 1
Date: Sept 09/2013 Time: pm am pm

Customer: 5 Blue Job Number: 1108-20
Location: Nisku, Ab Reported to: Joelle
Project: MPI Purchase Order :

NDT METHOD

MAGNETIC PARTICLE

Equipment: Parker B300 S/N: 17663
Calibration Due Date: Nov 06/2013
AC: x DC: Yoke: x Coil:
Continuous: x Dry: x Wet:
Particles: 7HF Color Contrast: WCP-2
Fluorescent: Sensitivity:

LIQUID PENETRANT

Penetrant: D/T:
Developer: D/T:
Dye: Fluorescent:
Water Wash:
Temperature:

Light Source: 100W Black Light (W): White Light (f/c): 100
PROCEDURE CODE: ASME Sec V Art 7 C.P.S.: MT-2V-Rev 4 ACCEPTANCE CODE: ASME Sec VIII App 6
PROCEDURE CUSTOMER: ACCEPTANCE CUSTOMER:
Before PWHT: x After PWHT: Before Hydro: x After Hydro:
Material: P1 Welded x painted: machined: as cleaned: x
Material Thickness: 5/8"
DESCRIPTION OF INSPECTION: A black on white mpi was carried out on 100% on following weld items. As per client request.

Qty	Part Description	Welder ID
2	Lift lug on pressure vessel	U

RESULTS: No relevant indication noted at time of final inspection. Acceptable to code.

CONSUMABLES USED: 1/2 Can

Operator: Shahzad aslam Signature: CGSB Level: II#12786 SNT Level: II
Assistant: Javed & Chris CGSB Level: SNT Level: Man Crew: 2 Hours Reg.: 1/2 hr
Mileage: Hours O.T.:

JOELLE DERY-BROCHU
QUALITY CONTROL
(780)955-2040 E:241

5Blue
Process Equipment Inc.

B7 Liquid Penetrant Inspection Reports

2303-8th Street, Nisku Alberta, T9E-7Z3 CANADA

This section does not apply

B8 Hardness Testing Report

2303-8th Street, Nisku Alberta, T9E-7Z3 CANADA

This section does not apply



B9 Impact Testing Report

2303-8th Street, Nisku Alberta, T9E-7Z3 CANADA

ALFOR METALLURGICAL COMPANY LTD.

CONSULTING ENGINEERS

FILE #13-478

5 Blue Process Equipment Inc.
2303 - 8 Street
Nisku, Alberta T9E 7Z3

August 31, 2013

CHARPY V-NOTCH IMPACT TEST RESULTS

Material Description: ASME SA-516, Grade 70; 0.625"-thick normalized plate; HT. #G8266-270020510; WPS #5B-106 AW; welded on August 8, 2013; as-welded condition; Vessel #5B1108-20.

Specimen Type: Charpy V-notch full-sized weld zone and heat-affected zone impact specimen, as per Part UG-84 of the ASME Code.

Testing Temperature: -50 F.

Results:

Weld zone: 72, 89, 86 ft-lb;

Heat-affected zone: 161, 134, 145 ft-lb.

Yours very truly,

ALFOR METALLURGICAL COMPANY LTD.

PERMIT TO PRACTICE
ALFOR METALLURGICAL COMPANY LTD.
Signature
Date Aug 31 2013
PERMIT NUMBER: P 2265
The Association of Professional Engineers, Geologists and Geophysicists of Alberta

CHARLES E. MOZESON, P. ENG

6035 - 88 STREET, EDMONTON, ALBERTA T6E 5T4 PHONE: 780-465-0562

B10 External Coating System, Surface Prep, Installation, Holiday and DFT Inspection Reports

2303-8th Street, Nisku Alberta, T9E-7Z3 CANADA

First Class PAINTING (1984) LTD.

INSPECTION REPORT

Customer: 5 Blue Job #: 1108

SURFACE PREPARATION

Date: Sept 18, 2013 Time: 9:30Am

Ambient Temp: 17°C Substrate Temp: 17°C

R.H.: 42.5% Dew Point: 2.1°C Abrasive Used: Si

BLAST EQUIPMENT AIR SUPPLY

Source: Electric Compressor Size: 3x100 hp

Moisture Traps: YES ☑ NO ☐ Nozzle Size: #7

Nozzle Condition: Good Testex PRESS-O-FILM™ HT X-Coarse 1.5 to 4.5 mil 38 to 115 µm

Nozzle Pressure (psi): 90 ☐ 100 ☐ 2.8 DIP: Hypodermic Needle Gauge ☐ Line Pressure Gauge ☐

PROFILE: Replica Tape: ☑ mils NACE ☐ SSPC ☑ Sa6

COAT NUMBER: 1 ☑ 2 ☐ 3 ☐

Date: Sept 18, 2013 Time: 11:15am

AMBIENT TEMP: 24.2°C SUBSTRATE TEMP: 24°C COAT TEMP: 21°C R.H.: 17.9% DEW POINT: 1.5°C

Type of Coating: Clovergard Color: Grey

Base: Batch #: W12-4367

Catalyst: Batch #: W13B54-13 Thinner: —

DRY FILM THICKNESS (mils)

LOCATION: Pipe HIGH: 6.0 LOW: 4.0 AVERAGE: 5.0 NUMBER OF READINGS: multi

DATE: Sept 19, 2013. APPROVED BY: Allan Labadie

COAT NUMBER: 1 ☐ 2 ☑ 3 ☐

Date: Sept 19, 2013. Time: 9:45am

AMBIENT TEMP: 16.2°C SUBSTRATE TEMP: 18°C COAT TEMP: 21°C R.H.: 17.9% DEW POINT: D.

Type of Coating: STANDARD GREY Color: grey

Base: Batch #: W13A52-17

Catalyst: Batch #: 112M421 Thinner: —

DRY FILM THICKNESS (mils)

LOCATION: pipe HIGH: 9.2 LOW: 6.4 AVERAGE: 7.3 NUMBER OF READINGS: multi

DATE: Sept 20, 2013. APPROVED BY: Allan Labadie

COAT NUMBER: 1 ☐ 2 ☐ 3 ☐

Date: Time:

AMBIENT TEMP: SUBSTRATE TEMP: COAT TEMP: R.H.: DEW POINT:

Type of Coating: Color:

Base: Batch #:

Catalyst: Batch #: Thinner:

DRY FILM THICKNESS (mils)

LOCATION: Pipe HIGH: 9.2 LOW: 6.4 AVERAGE: 7.3 NUMBER OF READINGS: multi

DATE: Sept 20, 2013. APPROVED BY: Allan Labadie

General Notes:

SHIPPING MANIFEST
BILL OF LADING

5 BLUE PROCESS EQUIPMENT INC
780-955-2040 2303-8TH STREET NISKUALBERTA T9E 7Z3

5 BLUE PROCESS EQUIPMENT INC. JOB # 1108

DATE:

END USER:

LOCATION: First Class

TRUCKING VIA: 5 Blue

UNIT PACKED BY: DATE:

CHECKED BY: DATE:

QUANTITY	DESCRIPTION	CHECKED
(21)	Pipe Spools	
	Blast, prime, paint as per attached drawing	

First Glass PAINTING (1984) LTD.

INSPECTION REPORT

Customer: 5 Blue | Job #: 1108

SURFACE PREPARATION

Date: Oct 3/13 | Time: 10:00 am

Ambient Temp: | Substrate Temp:

R.H.: 66% | Dew Point: -1 C | Abrasive Used:

BLAST EQUIPMENT AIR SUPPLY

Source: Electric Compressor | Size: 3 x 100 hp

Moisture Traps: YES ☑ NO ☐ | Nozzle Size: #7

Nozzle Condition: good | I Beams Blast only

Nozzle Pressure (psi): 90 ☐ 100 ☐

Testex PRESS-O-FILM™ HT www.testextape.com 3.0 X-Coarse 1.5 to 4.5 mil 38 to 115 µm Made in USA

EQUIP: Hypodermic Needle Gauge ☑ Line Pressure Gauge ☐

PROFILE: Replica Tape: ☐ ____ mils | NACE ☐ SSPC ☑

COAT NUMBER: 1 ☐ 2 ☐ 3 ☐

Date: | Time:

AMBIENT TEMP: | SUBSTRATE TEMP: | COAT TEMP: | R.H.: | DEW POINT:

Type of Coating: | Color:

Base: | Batch #:

Catalyst: | Batch #: | Thinner:

DRY FILM THICKNESS (mils)

LOCATION: | HIGH: | LOW: | AVERAGE: | NUMBER OF READINGS:

DATE: | APPROVED BY:

COAT NUMBER: 1 ☐ 2 ☐ 3 ☐

Date: | Time:

AMBIENT TEMP: | SUBSTRATE TEMP: | COAT TEMP: | R.H.: | DEW POINT:

Type of Coating: | Color:

Base: | Batch #:

Catalyst: | Batch #: | Thinner:

DRY FILM THICKNESS (mils)

LOCATION: | HIGH: | LOW: | AVERAGE: | NUMBER OF READINGS:

DATE: | APPROVED BY:

COAT NUMBER: 1 ☐ 2 ☐ 3 ☐

Date: | Time:

AMBIENT TEMP: | SUBSTRATE TEMP: | COAT TEMP: | R.H.: | DEW POINT:

Type of Coating: | Color:

Base: | Batch #:

Catalyst: | Batch #: | Thinner:

DRY FILM THICKNESS (mils)

LOCATION: | HIGH: | LOW: | AVERAGE: | NUMBER OF READINGS:

DATE: | APPROVED BY:

General Notes:

B11 Internal Coating System, Surface Prep, Installation, Holiday and DFT Inspection Reports

2303-8th Street, Nisku Alberta, T9E-7Z3 CANADA

This section does not apply

B12 Weld Maps

2303-8th Street, Nisku Alberta, T9E-7Z3 CANADA

THIS IS THE EXCLUSIVE PROPERTY OF INTI DESIGNS AND MAY NOT BE COPIED OR COMMUNICATED TO A THIRD PARTY WITHOUT THE WRITTEN AUTHORIZATION OF INTI DESIGNS.

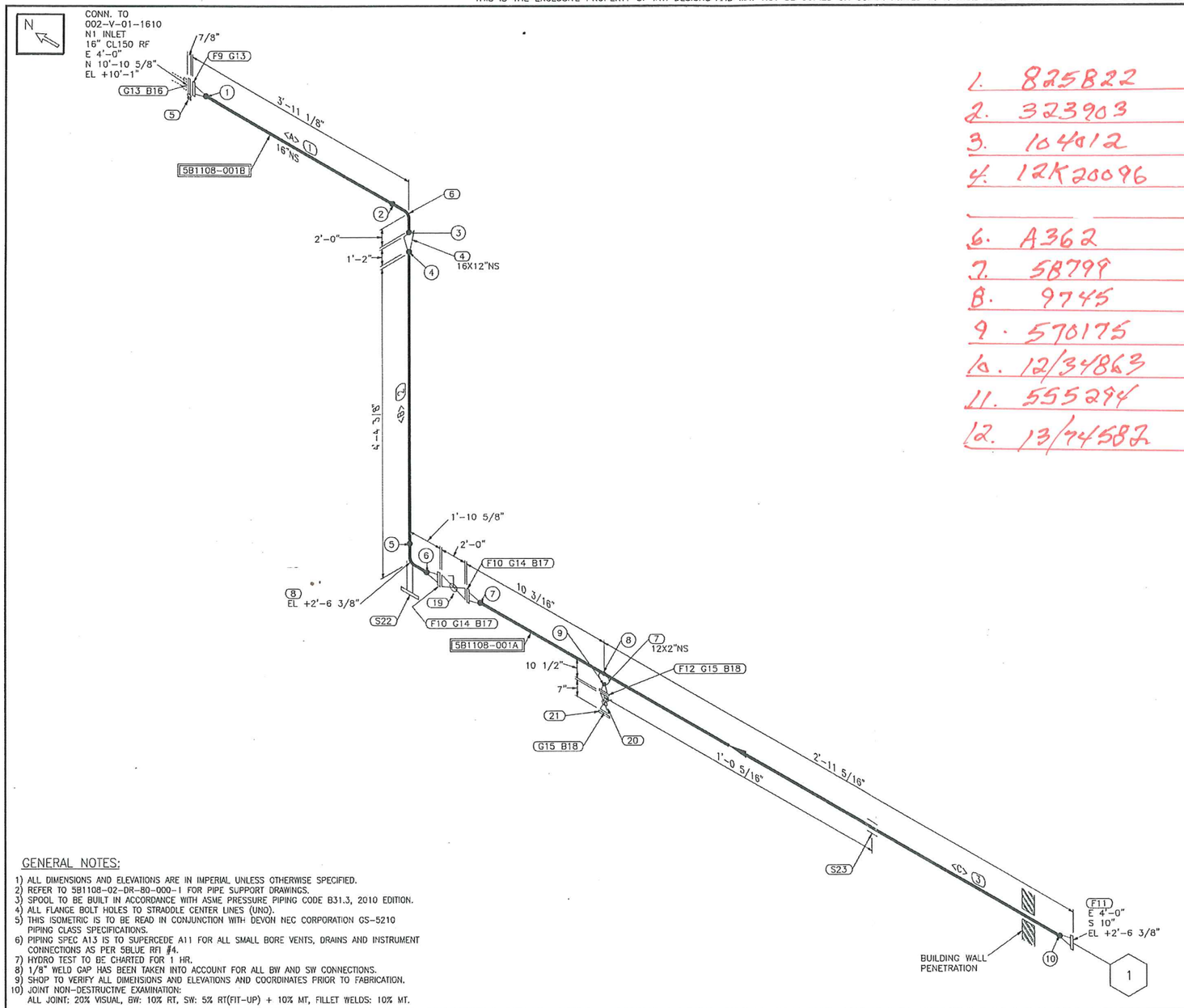

1. 825822
2. 323903
3. 104012
4. 12K20096
6. A362
7. 58799
8. 9745
9. 570175
10. 12/34863
11. 555294
12. 13/74587

BILL OF MATERIAL

MARK	SIZE (INCH)	DESCRIPTION	QTY	WEIGHT (LBS)
		SHOP MATERIALS		
		PIPE		
1	16	PIPE, SCH STD, ASTM A106B, SMLS, B36.10	1.5'	93.3
2	12	PIPE, SCH STD, ASTM A106B, SMLS, B36.10	2.9'	141.5
3	12	PIPE, SCH STD, ASTM A333 GR6, SMLS, B36.10	3.1'	149.8
		FITTINGS		
4	16X12	CON REDUCER, SCH STD, ASTM A234 WPB, B16.9	1	75.0
5	16	PADDLE BLANK & SPACER, CL150, RF, ASTM A516 GR 70N, B16.48	1	79.0
6	16	90 DEG LR ELBOW, SCH STD, ASTM A234 WPB, B16.9	1	208.0
7	12X2	WELDOLET, SCH 80, ASTM A350 LF2 CL1, MSS SP-97	1	1.8
8	12	90 DEG LR ELBOW, SCH STD, ASTM A234 WPB, B16.9	1	122.0
		FLANGES		
9	16	FLANGE, CL150, SCH STD, RFWN, ASTM A105N, B16.5	1	127.0
10	12	FLANGE, CL150, SCH STD, RFWN, ASTM A105N, B16.5	2	160.0
11	12	FLANGE, CL150, SCH STD, RFWN, ASTM A350 LF2 CL1, B16.5	1	80.0
12	2	FLANGE, CL150, SCH 80, RFWN, ASTM A350 LF2 CL1, B16.5	1	6.0
		GASKETS		
13	16	GASKET, CL150, RF, 1/8" THK, 316 SS SPIRAL WOUND, FLEX FILLER CGI, CS CENTERING RING, 316 SS INNER RING, B16.20	2	2.0
14	12	GASKET, CL150, RF, 1/8" THK, 316 SS SPIRAL WOUND, FLEX FILLER CGI, CS CENTERING RING, 316 SS INNER RING, B16.20	2	2.0
15	2	GASKET, CL150, RF, 1/8" THK, 316 SS SPIRAL WOUND, FLEX FILLER CGI, CS CENTERING RING, 316 SS INNER RING, B16.20	2	2.0
		BOLTS		
16	1X6 1/2	(16) STUDBOLT c/w 2 HEX NUTS, ASTM A193 GR B7, A194 GR 2H, B16.5	1	31.0
17	7/8X4 3/4	(12) STUDBOLT c/w 2 HEX NUTS, ASTM A193 GR B7, A194 GR 2H, B16.5	2	30.0
18	5/8X3 1/4	(4) STUDBOLT c/w 2 HEX NUTS, ASTM A193 GR B7, A194 GR 2H, B16.5	2	3.0
		VALVES / IN-LINE ITEMS		
19	12	BALL VALVE, CL150, RF, GEAR OP. (BD0106AG)	1	943.0
20	2	BALL VALVE, CL150, RF, LEVER OP. (BA0106A1)	1	33.0
21	2	BLIND FLANGE, CL150, RF, ASTM A350 LF2 CL1, B16.5	1	4.0
		SUPPORTS		
22	12	L12-3-12" (L= 2'-6 3/8")	1	80.0
23	12	GU-12" & SA-5	1	3.5
		PIPE SPOOLS		
		5B1108-001A 5B1108-001B		

CUT PIPE LENGTH

PIECE NO	LENGTH (FT-INS)	N.S. (INS)	REMARKS	END ONE	END TWO	ITEM CODE
<A>	1'5 7/8"	16		BEVEL	BEVEL	13
<B>	2'10 1/4"	12		BEVEL	BEVEL	13
<C>	3'0 1/4"	12		BEVEL	BEVEL	38

AS BUILT

TOTAL SHOP WEIGHT 2376.6
TOTAL FIELD WEIGHT 0.0
TOTAL WEIGHT-THIS DWG 2376.6

WELD NO.	SIZE	NOM. THK	WELD TYPE	DESCRIPTION	WELDER ID	DATE	NDE REPORT No.	Y.T.
10	12"	SCH STD	BW					
9	2"	SCH 80	BW					
8	2"	SCH 80	LET					
7	12"	SCH STD	BW					
6	12"	SCH STD	BW					
5	12"	SCH STD	BW					
4	12"	SCH STD	BW					
3	16"	SCH STD	BW					
2	16"	SCH STD	BW					
1	16"	SCH STD	BW					

GENERAL NOTES:

1) ALL DIMENSIONS AND ELEVATIONS ARE IN IMPERIAL UNLESS OTHERWISE SPECIFIED.
2) REFER TO 5B1108-02-DR-80-000-1 FOR PIPE SUPPORT DRAWINGS.
3) SPOOL TO BE BUILT IN ACCORDANCE WITH ASME PRESSURE PIPING CODE B31.3, 2010 EDITION.
4) ALL FLANGE BOLT HOLES TO STRADDLE CENTER LINES (UNO).
5) THIS ISOMETRIC IS TO BE READ IN CONJUNCTION WITH DEVON NEC CORPORATION GS-5210 PIPING CLASS SPECIFICATIONS.
6) PIPING SPEC A13 IS TO SUPERCEDE A11 FOR ALL SMALL BORE VENTS, DRAINS AND INSTRUMENT CONNECTIONS AS PER 5BLUE RFI #4.
7) HYDRO TEST TO BE CHARTED FOR 1 HR.
8) 1/8" WELD GAP HAS BEEN TAKEN INTO ACCOUNT FOR ALL BW AND SW CONNECTIONS.
9) SHOP TO VERIFY ALL DIMENSIONS AND ELEVATIONS AND COORDINATES PRIOR TO FABRICATION.
10) JOINT NON-DESTRUCTIVE EXAMINATION:
ALL JOINT: 20% VISUAL, BW: 10% RT, SW: 5% RT(FIT-UP) + 10% MT, FILLET WELDS: 10% MT.

REV.	D/M/Y	DESCRIPTION	BY	CHK	APP.
0	29/08/2013	ISSUED FOR CONSTRUCTION	RR	BB	

LEGEND:
- ○ : WELD NO.
- ⬭ : MARK NO.
- FFW ○ : FIELD FIT WELD
- ⊗ : FIELD WELD
- 4 : SPOOL NUMBER
- : PIPE SUPPORT

STD WELD PROC:	5B-102/103	PAINT SYSTEM:	SEE E&IL
L.T. WELD PROC:	5B-102/103	INSULATION:	NA
RATING/SPEC:	CL150/A11	SANDBLAST:	SSPC-SP6
HYDROTEST PSIG:	428	DESIGN TEMP °F:	100
RADIOGRAPHY:	10%	DESIGN PRES PSIG:	285
STRESS RELIEVE:	NO		

5Blue Process Equipment Inc.

INTI DESIGNS

TITLE: DEVON NEC CORPORATION.
FERRIER CENTRAL PROCESSING FACILITY
CENTRAL OIL BATTERY - LIQUID EXTRACTION PLANT (LEP)
PIPING ISOMETRIC
LINE NO. 324-PG-A11-01338

CLIENT DOCUMENT NUMBER	ISOMETRIC NUMBER	REV.
TBD	5B1108-02-DR-80-001-1	0

THIS IS THE EXCLUSIVE PROPERTY OF INTI DESIGNS AND MAY NOT BE COPIED OR COMMUNICATED TO A THIRD PARTY WITHOUT THE WRITTEN AUTHORIZATION OF INTI DESIGNS.

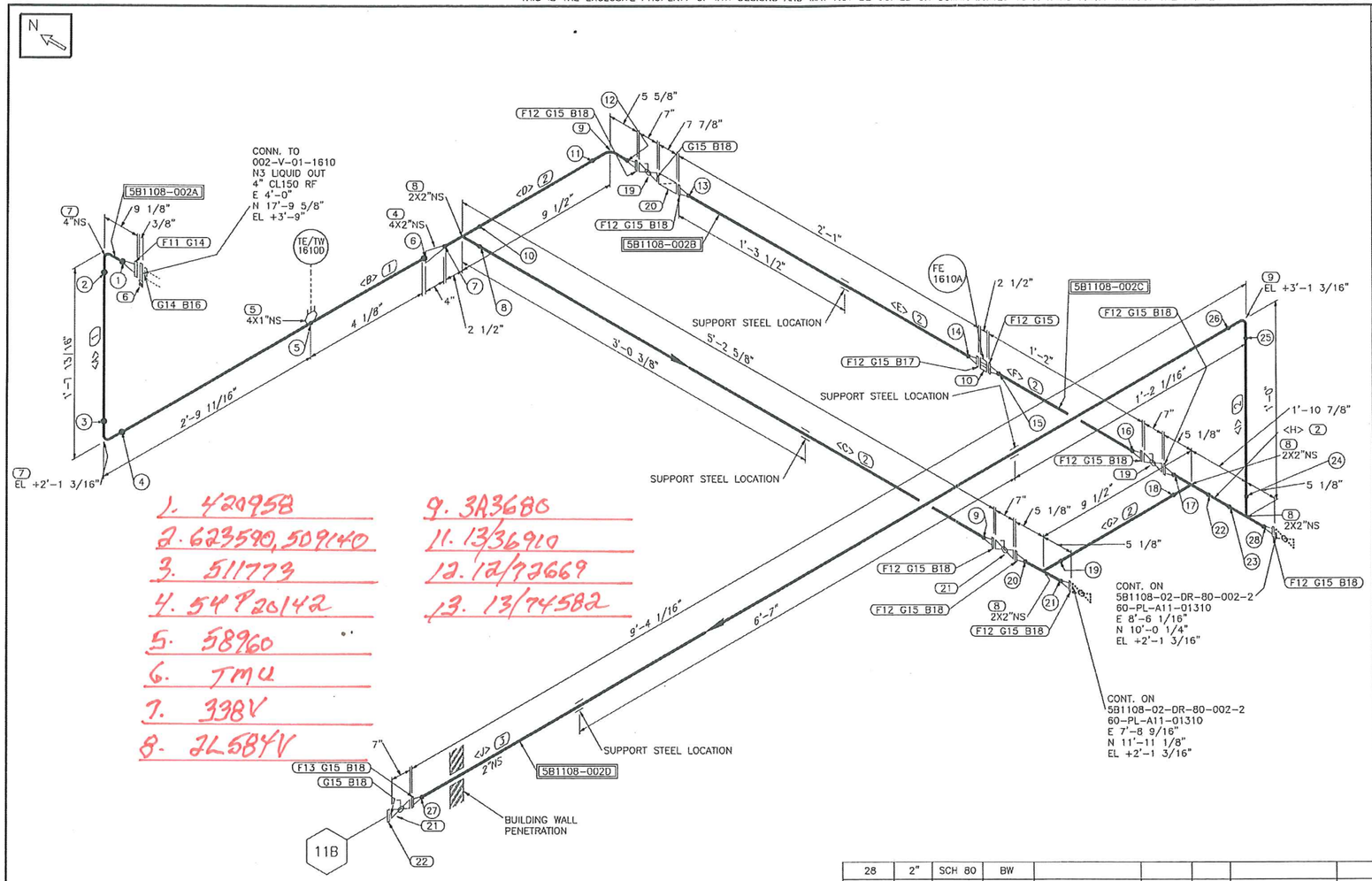

1. 420958
2. 623590, 509140
3. 511773
4. 548 20142
5. 58960
6. JMU
7. 338V
8. JL584V
9. 3A3680
11. 13/36910
12. 12/72669
13. 13/74582

BILL OF MATERIAL

MARK	SIZE (INCH)	DESCRIPTION	QTY	WEIGHT (LBS)
		SHOP MATERIALS		
		PIPE		
1	4	PIPE, SCH STD, ASTM A106B, SMLS, B36.10	3.3'	35.3
2	2	PIPE, SCH 80, ASTM A106B, SMLS, B36.10	9.9'	49.3
3	2	PIPE, SCH 80, ASTM A333 GR6, SMLS, B36.10	8.9'	44.5
		FITTINGS		
4	4X2	CON REDUCER, SCH STDx80, ASTM A234 WPB, B16.9	1	3.1
5	4X1	THREADOLET, CL3000, ASTM A105N, MSS SP-97	1	0.7
6	4	SPEC BLIND, CL150, RF, ASTM A516 GR 70N, B16.48	1	8.0
7	4	90 DEG LR ELBOW, SCH STD, ASTM A234 WPB, B16.9	2	17.4
8	2X2	TEE, SCH 80, ASTM A234 WPB, B16.9	4	14.8
9	2	90 DEG LR ELBOW, SCH 80, ASTM A234 WPB, B16.9	2	4.4
10	2	FLOW METER, CL150, RF, (FE-1610A)	1	5.0
		FLANGES		
11	4	FLANGE, CL150, SCH STD, RFWN, ASTM A105N, B16.5	1	15.0
12	2	FLANGE, CL150, SCH 80, RFWN, ASTM A105N, B16.5	10	60.0
13	2	FLANGE, CL150, SCH 80, RFWN, ASTM A350 LF2 CL1, B16.5	1	6.0
		GASKETS		
14	4	GASKET, CL150, RF, 1/8" THK, 316 SS SPIRAL WOUND, FLEX FILLER CGI, CS CENTERING RING, 316 SS INNER RING, B16.20	2	2.0
15	2	GASKET, CL150, RF, 1/8" THK, 316 SS SPIRAL WOUND, FLEX FILLER CGI, CS CENTERING RING, 316 SS INNER RING, B16.20	13	13.0
		BOLTS		
16	5/8X4 1/4	(8) STUDBOLT c/w 2 HEX NUTS, ASTM A193 GR B7, A194 GR 2H, B16.5	1	1.0
17	5/8X6	(4) STUDBOLT c/w 2 HEX NUTS, ASTM A193 GR B7, A194 GR 2H, B16.5	1	1.0
18	5/8X3 1/4	(4) STUDBOLT c/w 2 HEX NUTS, ASTM A193 GR B7, A194 GR 2H, B16.5	11	11.0
		VALVES / IN-LINE ITEMS		
19	2	BALL VALVE, CL150, RF, LEVER OP, (BV0106A)	2	66.0
20	2	Y-STRAINER, CL 150, RF (SP012504)	1	23.0
21	2	BALL VALVE, CL150, RF, LEVER OP, (BA0106A1)	2	66.0
22	2	BLIND FLANGE, CL150, RF, ASTM A350 LF2 CL1, B16.5	1	4.0
		PIPE SPOOLS		
		5B1108-002A 5B1108-002B 5B1108-002C 5B1108-002D		

CUT PIPE LENGTH

PIECE NO	LENGTH (FT-INS)	N.S. (INS)	REMARKS	END ONE	END TWO	ITEM CODE
<A>	7 9/16"	4		BEVEL	BEVEL	86
<B>	2'7 11/16"	4		BEVEL	BEVEL	86
<C>	4'9 3/8"	2		BEVEL	BEVEL	81
<D>	3 3/4"	2		BEVEL	BEVEL	81
<E>	1'7 3/4"	2		BEVEL	BEVEL	81
<F>	8 3/4"	2		BEVEL	BEVEL	81
<G>	4 1/4"	2		BEVEL	BEVEL	81
<H>	1'5 5/8"	2		BEVEL	BEVEL	81
<I>	6 1/4"	2		BEVEL	BEVEL	81
<J>	8'10 1/4"	2		BEVEL	BEVEL	80

AS BUILT

TOTAL SHOP WEIGHT	450.3
TOTAL FIELD WEIGHT	0.0
TOTAL WEIGHT-THIS DWG	450.3

GENERAL NOTES:

1) ALL DIMENSIONS AND ELEVATIONS ARE IN IMPERIAL UNLESS OTHERWISE SPECIFIED.
2) REFER TO 5B1108-02-DR-80-000-1 FOR PIPE SUPPORT DRAWINGS.
3) SPOOL TO BE BUILT IN ACCORDANCE WITH ASME PRESSURE PIPING CODE B31.3, 2010 EDITION.
4) ALL FLANGE BOLT HOLES TO STRADDLE CENTER LINES (UNO).
5) THIS ISOMETRIC IS TO BE READ IN CONJUNCTION WITH DEVON NEC CORPORATION GS-5210 PIPING CLASS SPECIFICATIONS.
6) PIPING SPEC A13 IS TO SUPERCEDE A11 FOR ALL SMALL BORE VENTS, DRAINS AND INSTRUMENT CONNECTIONS AS PER 5BLUE RFI #4.
7) HYDRO TEST TO BE CHARTED FOR 1 HR.
8) 1/8" WELD GAP HAS BEEN TAKEN INTO ACCOUNT FOR ALL BW AND SW CONNECTIONS.
9) SHOP TO VERIFY ALL DIMENSIONS AND ELEVATIONS AND COORDINATES PRIOR TO FABRICATION.
10) JOINT NON-DESTRUCTIVE EXAMINATION:
ALL JOINT: 20% VISUAL, BW: 10% RT, SW: 5% RT(FIT-UP) + 10% MT, FILLET WELDS: 10% MT.

WELD NO.	SIZE	NOM. THK	WELD TYPE	DESCRIPTION	WELDER ID	DATE	NDE REPORT No.	V.T.
28	2"	SCH 80	BW					
27	2"	SCH 80	BW					
26	2"	SCH 80	BW					
25	2"	SCH 80	BW					
24	2"	SCH 80	BW					
23	2"	SCH 80	BW					
22	2"	SCH 80	BW					
21	2"	SCH 80	BW					
20	2"	SCH 80	BW					
19	2"	SCH 80	BW					
18	2"	SCH 80	BW					
17	2"	SCH 80	BW					
16	2"	SCH 80	BW					
15	2"	SCH 80	BW					
14	2"	SCH 80	BW					
13	2"	SCH 80	BW					
12	2"	SCH 80	BW					
11	2"	SCH 80	BW					
10	2"	SCH 80	BW					
9	2"	SCH 80	BW					
8	2"	SCH 80	BW					
7	2"	SCH 80	BW					
6	4"	SCH STD	BW					
5	1"	CL3000	LET					
4	4"	SCH STD	BW					
3	4"	SCH STD	BW					
2	4"	SCH STD	BW					
1	4"	SCH STD	BW					

REV.	D/M/Y	DESCRIPTION	BY	CHK	APP
0	30/08/2013	ISSUED FOR CONSTRUCTION	RR	BB	

LEGEND:
- ○ : WELD NO.
- ⬭ : MARK NO.
- FFW ○ : FIELD FIT WELD
- ✕ : FIELD WELD
- 4 : SPOOL NUMBER
- : PIPE SUPPORT

STD WELD PROC:	5B-102/103	PAINT SYSTEM:	SEE E&IL
L.T. WELD PROC:	5B-102/103	INSULATION:	NA
RATING/SPEC:	CL150/A11	SANDBLAST:	SSPC-SP6
HYDROTEST PSIG:	428	DESIGN TEMP °F:	100
RADIOGRAPHY:	10%	DESIGN PRES PSIG:	285
STRESS RELIEVE:	NO		

5Blue Process Equipment Inc.

INTI DESIGNS

TITLE: DEVON NEC CORPORATION.
FERRIER CENTRAL PROCESSING FACILITY
CENTRAL OIL BATTERY - LIQUID EXTRACTION PLANT (LEP)
PIPING ISOMETRIC
LINE NO. 60-PL-A11-01310

CLIENT DOCUMENT NUMBER	ISOMETRIC NUMBER	REV.
TBD	5B1108-02-DR-80-002-1	0

THIS IS THE EXCLUSIVE PROPERTY OF INTI DESIGNS AND MAY NOT BE COPIED OR COMMUNICATED TO A THIRD PARTY WITHOUT THE WRITTEN AUTHORIZATION OF INTI DESIGNS.

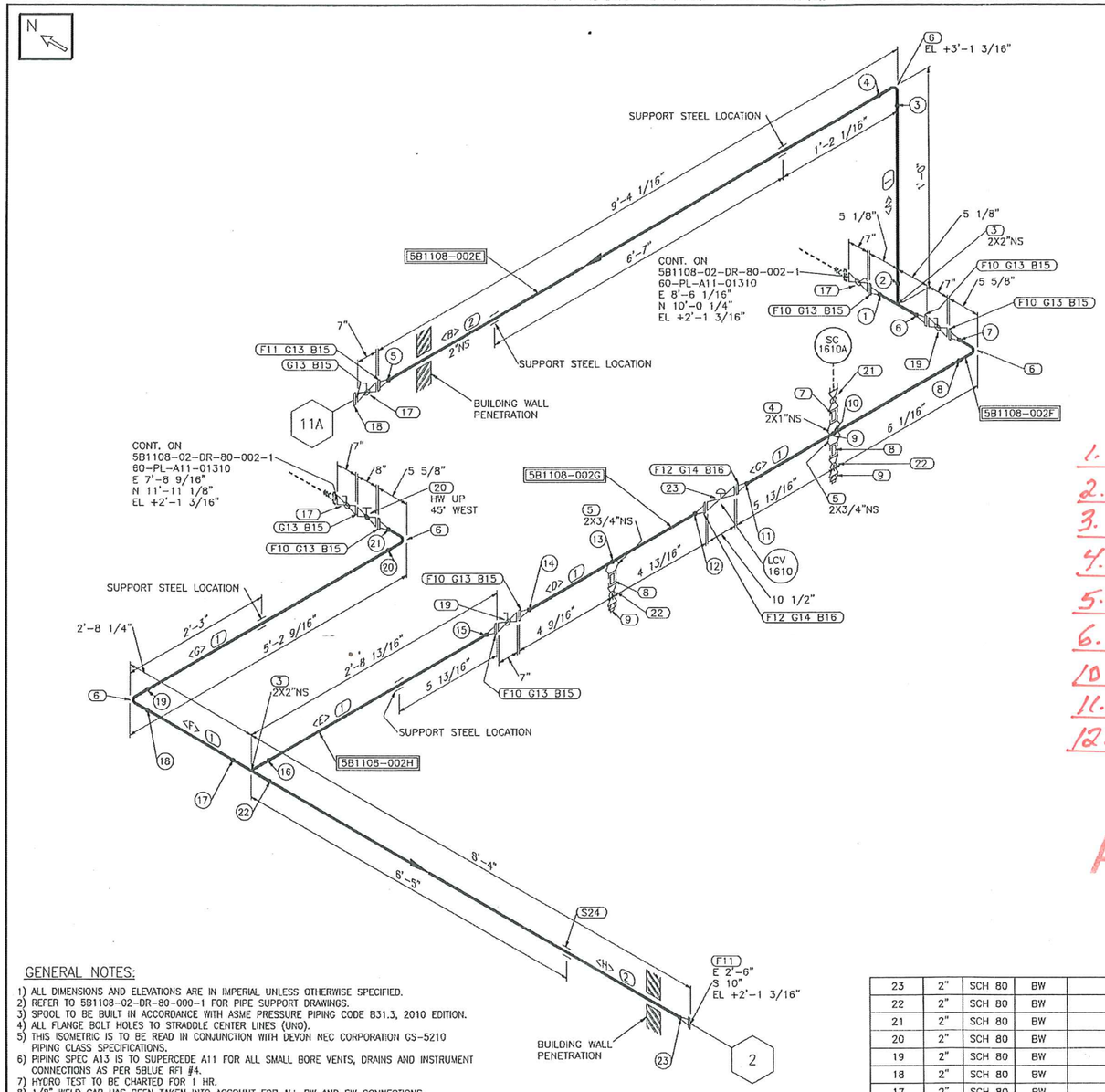

1. 2304-02929
2. 511773
3. 2L584V
4. 58960
5. 58880
6. 28105, B422, 7630
10. 12/72669
11. 13/74582
12. 5317Z

AS BUILT

BILL OF MATERIAL

MARK	SIZE (INCH)	DESCRIPTION	QTY	WEIGHT (LBS)
		SHOP MATERIALS		
		PIPE		
1	2	PIPE, SCH 80, ASTM A106B, SMLS, B36.10	10.6'	52.9
2	2	PIPE, SCH 80, ASTM A333 GR6, SMLS, B36.10	16.8'	84.1
		FITTINGS		
3	2X2	TEE, SCH 80, ASTM A234 WPB, B16.9	2	7.4
4	2X1	THREADOLET, CL3000, ASTM A105N, MSS SP-97	1	0.7
5	2X3/4	THREADOLET, CL3000, ASTM A105N, MSS SP-97	2	0.7
6	2	90 DEG LR ELBOW, SCH 80, ASTM A234 WPB, B16.9	4	8.8
7	1	NIPPLE, SCH 160, ASTM A106B, SMLS, B36.10 TBE (4.0000 LG)	1	2.9
8	3/4	NIPPLE, SCH 160, ASTM A106B, SMLS, B36.10 TBE (4.0000 LG)	2	3.9
9	3/4	SOLID ROUND HEAD PLUG, THRD, ASTM A105N, B16.11	2	0.8
		FLANGES		
10	2	FLANGE, CL150, SCH 80, RFWN, ASTM A105N, B16.5	6	36.0
11	2	FLANGE, CL150, SCH 80, RFWN, ASTM A350 LF2 CL1, B16.5	2	12.0
12	2	FLANGE, CL300, SCH 80, RFWN, ASTM A105N, B16.5	2	18.0
		GASKETS		
13	2	GASKET, CL150, RF, 1/8" THK, 316 SS SPIRAL WOUND, FLEX FILLER CGI, CS CENTERING RING, 316 SS INNER RING, B16.20	9	9.0
14	2	GASKET, CL300, RF, 1/8" THK, 316 SS SPIRAL WOUND, FLEX FILLER CGI, CS CENTERING RING, 316 SS INNER RING, B16.20	2	2.0
		BOLTS		
15	5/8X3 1/4	(4) STUDBOLT c/w 2 HEX NUTS, ASTM A193 GR B7, A194 GR 2H, B16.5	9	9.0
16	5/8X3 1/2	(8) STUDBOLT c/w 2 HEX NUTS, ASTM A193 GR B7, A194 GR 2H, B16.5	2	2.0
		VALVES / IN-LINE ITEMS		
17	2	BALL VALVE, CL150, RF, LEVER OP, (BA0106A1)	3	99.0
18	2	BLIND FLANGE, CL150, RF, ASTM A350 LF2 CL1, B16.5	1	4.0
19	2	BALL VALVE, CL150, RF, LEVER OP, (BV0106A)	2	66.0
20	2	GLOBE VALVE, CL150, RF, HW OP, (LA0106A1)	1	47.0
21	1	BALL VALVE, CL800, THRD, LEVER OP, (BA8202A)	1	1.4
22	3/4	BALL VALVE, CL800, THRD, LEVER OP, (BA8202A)	2	1.6
		INSTRUMENTS		
23	2	CONTROL VALVE, CL300, RF TAG: (LCV-1610)	1	100.0
		SUPPORTS		
24	2	GU-2" & SA-4	1	0.2
		PIPE SPOOLS		
		5B1108-002E 5B1108-002F 5B1108-002G 5B1108-002H		

CUT PIPE LENGTH

PIECE NO	LENGTH (FT-INS)	N.S. (INS)	REMARKS	END ONE	END TWO	ITEM CODE
<A>	6 1/4"	2		BEVEL	BEVEL	81
<B>	8'10 1/4"	2		BEVEL	BEVEL	80
<C>	5 7/8"	2		BEVEL	BEVEL	81
<D>	3 7/8"	2		BEVEL	BEVEL	81
<E>	2'3 1/2"	2		BEVEL	BEVEL	81
<F>	2'2 1/2"	2		BEVEL	BEVEL	81
<G>	4'8 5/16"	2		BEVEL	BEVEL	81
<H>	7'10 3/4"	2		BEVEL	BEVEL	80

TOTAL SHOP WEIGHT 569.1
TOTAL FIELD WEIGHT 0.0
TOTAL WEIGHT-THIS DWG 569.1

WELD NO.	SIZE	NOM. THK	WELD TYPE	DESCRIPTION	WELDER ID	DATE	NDE REPORT No.	V.T.
23	2"	SCH 80	BW					
22	2"	SCH 80	BW					
21	2"	SCH 80	BW					
20	2"	SCH 80	BW					
19	2"	SCH 80	BW					
18	2"	SCH 80	BW					
17	2"	SCH 80	BW					
16	2"	SCH 80	BW					

WELD NO.	SIZE	NOM. THK	WELD TYPE	DESCRIPTION	WELDER ID	DATE	NDE REPORT No.	V.T.
15	2"	SCH 80	BW					
14	2"	SCH 80	BW					
13	3/4"	CL3000	LET					
12	2"	SCH 80	BW					
11	2"	SCH 80	BW					
10	3/4"	CL3000	LET					
9	1"	CL3000	LET					
8	2"	SCH 80	BW					
7	2"	SCH 80	BW					
6	2"	SCH 80	BW					
5	2"	SCH 80	BW					
4	2"	SCH 80	BW					
3	2"	SCH 80	BW					
2	2"	SCH 80	BW					
1	2"	SCH 80	BW					

GENERAL NOTES:

1) ALL DIMENSIONS AND ELEVATIONS ARE IN IMPERIAL UNLESS OTHERWISE SPECIFIED.
2) REFER TO 5B1108-02-DR-80-000-1 FOR PIPE SUPPORT DRAWINGS.
3) SPOOL TO BE BUILT IN ACCORDANCE WITH ASME PRESSURE PIPING CODE B31.3, 2010 EDITION.
4) ALL FLANGE BOLT HOLES TO STRADDLE CENTER LINES (UNO).
5) THIS ISOMETRIC IS TO BE READ IN CONJUNCTION WITH DEVON NEC CORPORATION GS-5210 PIPING CLASS SPECIFICATIONS.
6) PIPING SPEC A13 IS TO SUPERCEDE A11 FOR ALL SMALL BORE VENTS, DRAINS AND INSTRUMENT CONNECTIONS AS PER 5BLUE RFI #4.
7) HYDRO TEST TO BE CHARTED FOR 1 HR.
8) 1/8" WELD GAP HAS BEEN TAKEN INTO ACCOUNT FOR ALL BW AND SW CONNECTIONS.
9) SHOP TO VERIFY ALL DIMENSIONS AND ELEVATIONS AND COORDINATES PRIOR TO FABRICATION.
10) JOINT NON-DESTRUCTIVE EXAMINATION:
ALL JOINT: 20% VISUAL, BW: 10% RT, SW: 5% RT(FIT-UP) + 10% MT, FILLET WELDS: 10% MT.

REV.	D/M/Y	DESCRIPTION	BY	CHK	APP
0	30/08/2013	ISSUED FOR CONSTRUCTION	RR	BB	

LEGEND:
- ○ : WELD NO.
- ▭ : MARK NO.
- FFW ○ : FIELD FIT WELD
- ✕ : FIELD WELD
- 4 : SPOOL NUMBER
- : PIPE SUPPORT

STD WELD PROC:	5B-102/103	PAINT SYSTEM:	SEE E&IL
L.T. WELD PROC:	5B-102/103	INSULATION:	NA
RATING/SPEC:	CL150/A11	SANDBLAST:	SSPC-SP6
HYDROTEST PSIG:	428	DESIGN TEMP °F:	100
RADIOGRAPHY:	10%	DESIGN PRES PSIG:	285
STRESS RELIEVE:	NO		

5Blue Process Equipment Inc.

INTI DESIGNS

TITLE: DEVON NEC CORPORATION.
FERRIER CENTRAL PROCESSING FACILITY
CENTRAL OIL BATTERY – LIQUID EXTRACTION PLANT (LEP)
PIPING ISOMETRIC
LINE NO. 60-PL-A11-01310

CLIENT DOCUMENT NUMBER	ISOMETRIC NUMBER	REV.
TBD	5B1108-02-DR-80-002-2	0

THIS IS THE EXCLUSIVE PROPERTY OF INTI DESIGNS AND MAY NOT BE COPIED OR COMMUNICATED TO A THIRD PARTY WITHOUT THE WRITTEN AUTHORIZATION OF INTI DESIGNS.

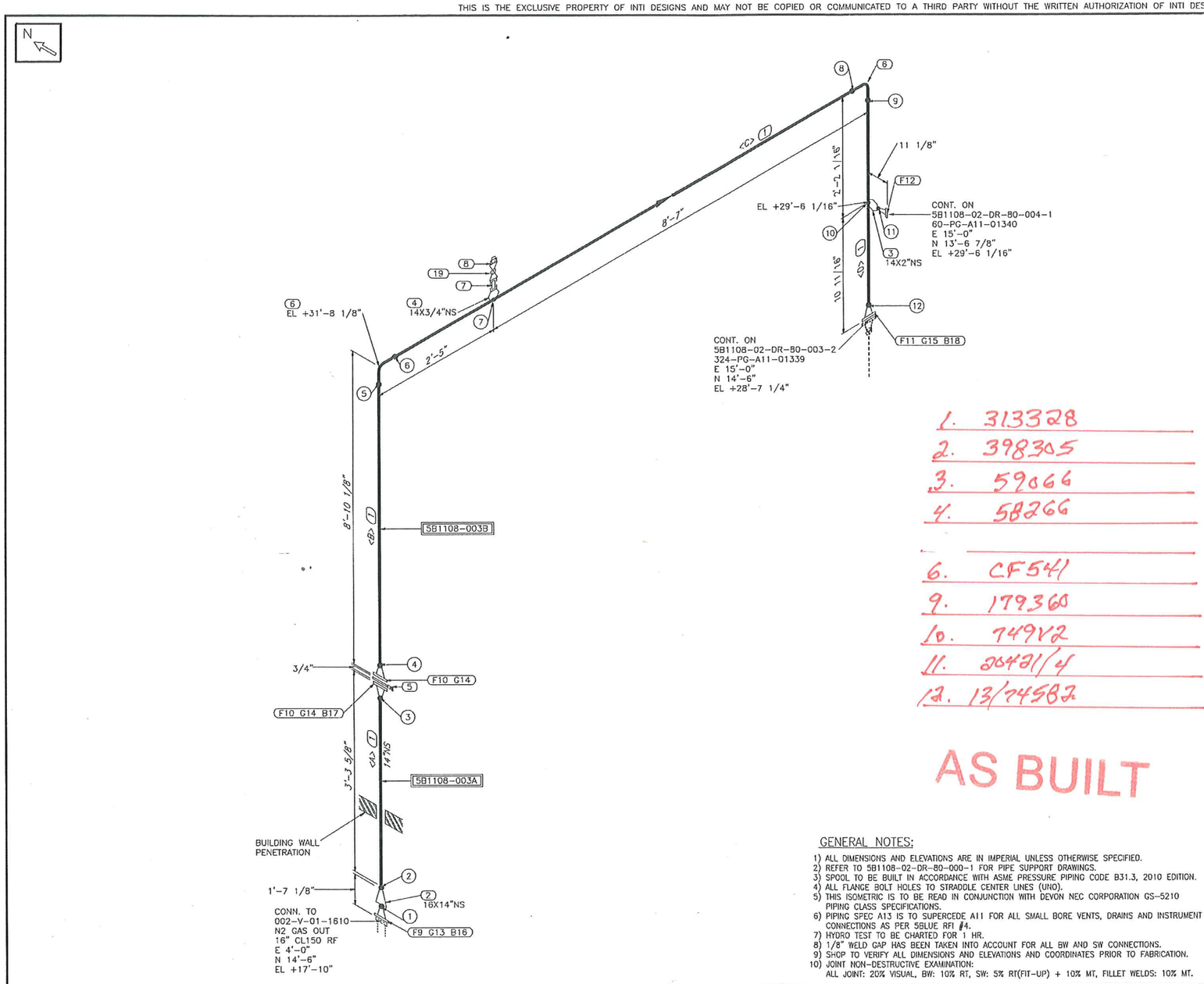

1. 313328
2. 398305
3. 59066
4. 58266
6. CF541
9. 179360
10. 74982
11. 20431/4
12. 13/74582

AS BUILT

BILL OF MATERIAL

MARK	SIZE (INCH)	DESCRIPTION	QTY	WEIGHT (LBS)
		SHOP MATERIALS		
		PIPE		
1	14	PIPE, SCH STD, ASTM A333 GR6, SMLS, B36.10	18.0'	977.7
		FITTINGS		
2	16X14	CON REDUCER, SCH STD, ASTM A420 WPL6, B16.9	1	77.0
3	14X2	WELDOLET, SCH 80, ASTM A350 LF2 CL1, MSS SP-97	1	1.8
4	14X3/4	THREADOLET, CL3000, ASTM A350 LF2 CL1, MSS SP-97	1	0.4
5	14	SPEC BLIND, CL150, RF, ASTM A516 GR 70N, B16.48	1	57.0
6	14	90 DEG LR ELBOW, SCH STD, ASTM A420 WPL6, B16.9	2	314.0
7	3/4	NIPPLE, SCH 160, ASTM A333 GR6, SMLS, B36.10 TBE (4.0000 MM LG)	1	2.0
8	3/4	SOLID ROUND HEAD PLUG, THRD, ASTM A350 LF2 CL1, B16.11	1	0.4
		FLANGES		
9	16	FLANGE, CL150, SCH STD, RFWN, ASTM A350 LF2 CL1, B16.5	1	127.0
10	14	FLANGE, CL150, SCH STD, RFWN, ASTM A350 LF2 CL1, B16.5	2	240.0
11	14	FLANGE, CL300, SCH STD, RFWN, ASTM A350 LF2 CL1, B16.5	1	186.0
12	2	FLANGE, CL150, SCH 80, RFWN, ASTM A350 LF2 CL1, B16.5	1	6.0
		GASKETS		
13	16	GASKET, CL150, RF, 1/8" THK, 316 SS SPIRAL WOUND, FLEX FILLER CGI, CS CENTERING RING, 316 SS INNER RING, B16.20	1	1.0
14	14	GASKET, CL150, RF, 1/8" THK, 316 SS SPIRAL WOUND, FLEX FILLER CGI, CS CENTERING RING, 316 SS INNER RING, B16.20	2	2.0
15	14	GASKET, CL300, RF, 1/8" THK, 316 SS SPIRAL WOUND, FLEX FILLER CGI, CS CENTERING RING, 316 SS INNER RING, B16.20	1	1.0
		BOLTS		
16	1X5 1/2	(16) STUDBOLT c/w 2 HEX NUTS, ASTM A193 GR B7, A194 GR 2H, B16.5	1	31.0
17	1X6 1/4	(12) STUDBOLT c/w 2 HEX NUTS, ASTM A193 GR B7, A194 GR 2H, B16.5	1	25.0
18	1 1/8X7	(20) STUDBOLT c/w 2 HEX NUTS, ASTM A193 GR B7, A194 GR 2H, B16.5	1	62.0
		VALVES / IN-LINE ITEMS		
19	3/4	BALL VALVE, CL800, THRD, LEVER OP, (BA8202A)	1	0.8
		PIPE SPOOLS		
		5B1108-003A 5B1108-003B		

CUT PIPE LENGTH

PIECE NO	LENGTH (FT-INS)	N.S. (INS)	REMARKS	END ONE	END TWO	ITEM CODE
<A>	2'10 1/2"	14		BEVEL	BEVEL	19
<B>	6'7 7/8"	14		BEVEL	BEVEL	19
<C>	7'5 3/4"	14		BEVEL	BEVEL	19
<D>	9 7/8"	14		BEVEL	BEVEL	19

TOTAL SHOP WEIGHT 2111.9
TOTAL FIELD WEIGHT 0.0
TOTAL WEIGHT-THIS DWG 2111.9

WELD NO.	SIZE	NOM. THK	WELD TYPE	DESCRIPTION	WELDER ID	DATE	NDE REPORT No.	V.T.
12	14"	SCH STD	BW					
11	2"	SCH 80	BW					
10	2"	SCH 80	LET					
9	14"	SCH STD	BW					
8	14"	SCH STD	BW					
7	3/4"	CL3000	LET					
6	14"	SCH STD	BW					
5	14"	SCH STD	BW					
4	14"	SCH STD	BW					
3	14"	SCH STD	BW					
2	14"	SCH STD	BW					
1	16"	SCH STD	BW					

GENERAL NOTES:

1) ALL DIMENSIONS AND ELEVATIONS ARE IN IMPERIAL UNLESS OTHERWISE SPECIFIED.
2) REFER TO 5B1108-02-DR-80-000-1 FOR PIPE SUPPORT DRAWINGS.
3) SPOOL TO BE BUILT IN ACCORDANCE WITH ASME PRESSURE PIPING CODE B31.3, 2010 EDITION.
4) ALL FLANGE BOLT HOLES TO STRADDLE CENTER LINES (UNO).
5) THIS ISOMETRIC IS TO BE READ IN CONJUNCTION WITH DEVON NEC CORPORATION GS-5210 PIPING CLASS SPECIFICATIONS.
6) PIPING SPEC A13 IS TO SUPERCEDE A11 FOR ALL SMALL BORE VENTS, DRAINS AND INSTRUMENT CONNECTIONS AS PER 5BLUE RFI #4.
7) HYDRO TEST TO BE CHARTED FOR 1 HR.
8) 1/8" WELD GAP HAS BEEN TAKEN INTO ACCOUNT FOR ALL BW AND SW CONNECTIONS.
9) SHOP TO VERIFY ALL DIMENSIONS AND ELEVATIONS AND COORDINATES PRIOR TO FABRICATION.
10) JOINT NON-DESTRUCTIVE EXAMINATION:
ALL JOINT: 20% VISUAL, BW: 10% RT, SW: 5% RT(FIT-UP) + 10% MT, FILLET WELDS: 10% MT.

REV.	D/M/Y	DESCRIPTION	BY	CHK	APP
0	28/08/2013	ISSUED FOR CONSTRUCTION	RR	BB	

LEGEND:
○ : WELD NO.
⬭ : MARK NO.
FFW ○ : FIELD FIT WELD
⋈ : FIELD WELD
4 : SPOOL NUMBER
: PIPE SUPPORT

STD WELD PROC:	5B-102/103	PAINT SYSTEM:	SEE E&IL
L.T. WELD PROC:	5B-102/103	INSULATION:	NA
RATING/SPEC:	CL150/A11	SANDBLAST:	SSPC-SP6
HYDROTEST PSIG:	428	DESIGN TEMP °F:	100
RADIOGRAPHY:	10%	DESIGN PRES PSIG:	285
STRESS RELIEVE:	NO		

5Blue Process Equipment Inc.

INTI DESIGNS

TITLE: DEVON NEC CORPORATION.
FERRIER CENTRAL PROCESSING FACILITY
CENTRAL OIL BATTERY - LIQUID EXTRACTION PLANT (LEP)
PIPING ISOMETRIC
LINE NO. 324-PG-A11-01339

CLIENT DOCUMENT NUMBER	ISOMETRIC NUMBER	REV.
TBD	5B1108-02-DR-80-003-1	0

THIS IS THE EXCLUSIVE PROPERTY OF INTI DESIGNS AND MAY NOT BE COPIED OR COMMUNICATED TO A THIRD PARTY WITHOUT THE WRITTEN AUTHORIZATION OF INTI DESIGNS.

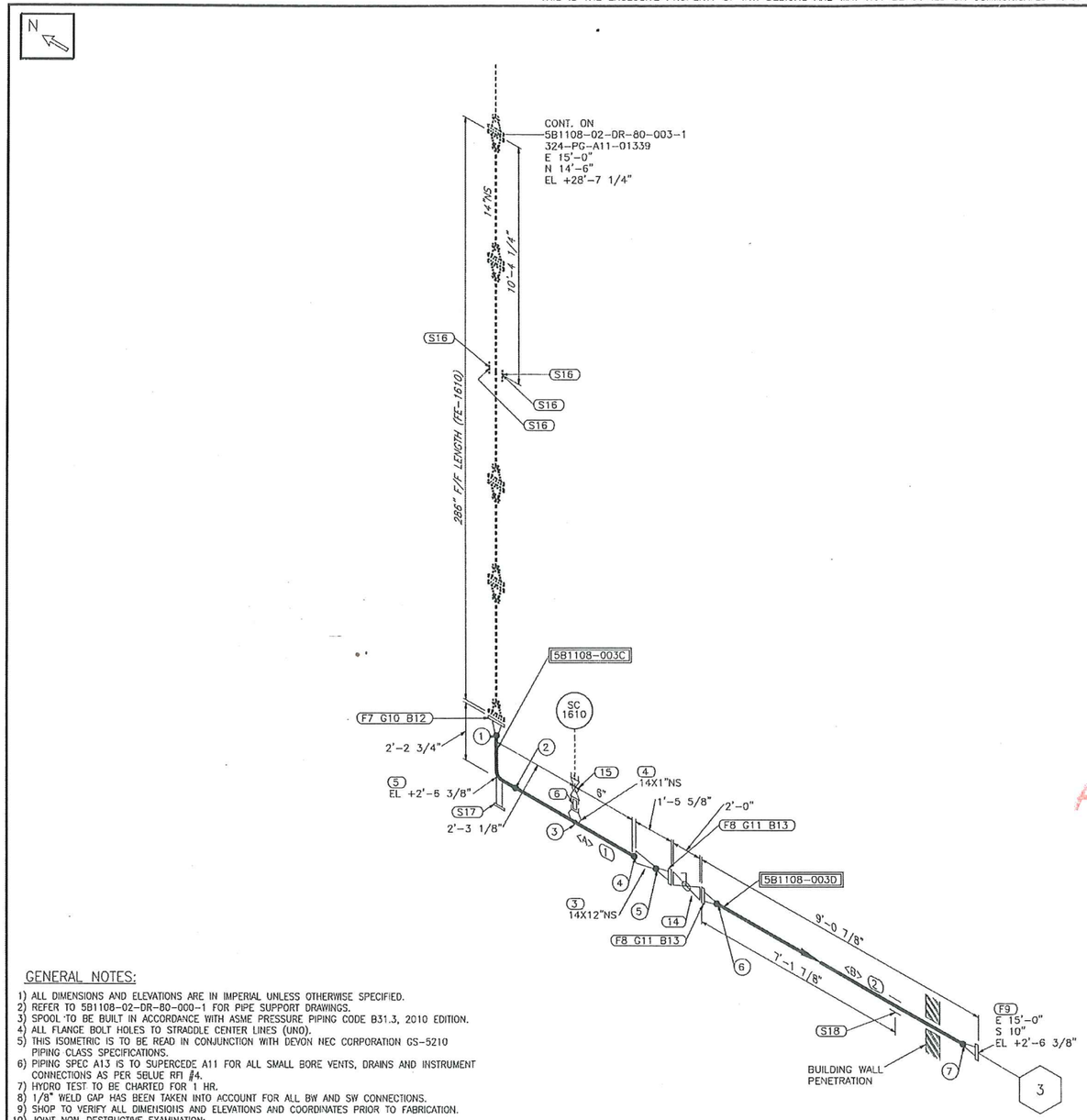

1. 313328
2. 104012
3. A88V
4. 58960
5. 9362
7. 179356
8. 12/34863
9. 555294

AS BUILT

BILL OF MATERIAL

MARK	SIZE (INCH)	DESCRIPTION	QTY	WEIGHT (LBS)
		SHOP MATERIALS		
		PIPE		
1	14	PIPE, SCH STD, ASTM A106B, SMLS, B36.10	1.0'	54.6
2	12	PIPE, SCH STD, ASTM A333 GR6, SMLS, B36.10	8.4'	411.5
		FITTINGS		
3	14X12	CON REDUCER, SCH STD, ASTM A234 WPB, B16.9	1	63.0
4	14X1	THREADOLET, CL3000, ASTM A105N, MSS SP-97	1	0.7
5	14	90 DEG LR ELBOW, SCH STD, ASTM A234 WPB, B16.9	1	157.0
6	1	NIPPLE, SCH 160, ASTM A106B, SMLS, B36.10 TBE (4.0000 MM LG)	1	2.9
		FLANGES		
7	14	FLANGE, CL300, SCH STD, RFWN, ASTM A105N, B16.5	1	186.0
8	12	FLANGE, CL150, SCH STD, RFWN, ASTM A105N, B16.5	2	160.0
9	12	FLANGE, CL150, SCH STD, RFWN, ASTM A350 LF2 CL1, B16.5	1	80.0
		GASKETS		
10	14	GASKET, CL300, RF, 1/8" THK, 316 SS SPIRAL WOUND, FLEX FILLER CGI, CS CENTERING RING, 316 SS INNER RING, B16.20	1	1.0
11	12	GASKET, CL150, RF, 1/8" THK, 316 SS SPIRAL WOUND, FLEX FILLER CGI, CS CENTERING RING, 316 SS INNER RING, B16.20	2	2.0
		BOLTS		
12	1 1/8X7	(20) STUDBOLT c/w 2 HEX NUTS, ASTM A193 GR B7, A194 GR 2H, B16.5	1	62.0
13	7/8X4 3/4	(12) STUDBOLT c/w 2 HEX NUTS, ASTM A193 GR B7, A194 GR 2H, B16.5	2	30.0
		VALVES / IN-LINE ITEMS		
14	12	BALL VALVE, CL150, RF, GEAR OP, (BD0106AG)	1	943.0
15	1	BALL VALVE, CL800, THRD, LEVER OP, (BA8202A)	1	1.4
		SUPPORTS		
16	14	PS1	4	64.0
17	14	L12-3-14" (L= 2'-6 3/8")	1	140.0
18	12	GU-12" & SA-5	1	3.5
		PIPE SPOOLS		
		5B1108-003C 5B1108-003D		

CUT PIPE LENGTH

PIECE NO	LENGTH (FT-INS)	N.S. (INS)	REMARKS	END ONE	END TWO	ITEM CODE
<A>	1'0"	14		BEVEL	BEVEL	26
<B>	8'3 5/8"	12		BEVEL	BEVEL	19

TOTAL SHOP WEIGHT 2362.0
TOTAL FIELD WEIGHT 0.0
TOTAL WEIGHT-THIS DWG 2362.0

WELD NO.	SIZE	NOM. THK	WELD TYPE	DESCRIPTION	WELDER ID	DATE	NDE REPORT No.	V.T.
7	12"	SCH STD	BW					
6	12"	SCH STD	BW					
5	12"	SCH STD	BW					
4	14"	SCH STD	BW					
3	1"	CL3000	LET					
2	14"	SCH STD	BW					
1	14"	SCH STD	BW					

GENERAL NOTES:

1) ALL DIMENSIONS AND ELEVATIONS ARE IN IMPERIAL UNLESS OTHERWISE SPECIFIED.
2) REFER TO 5B1108-02-DR-80-000-1 FOR PIPE SUPPORT DRAWINGS.
3) SPOOL TO BE BUILT IN ACCORDANCE WITH ASME PRESSURE PIPING CODE B31.3, 2010 EDITION.
4) ALL FLANGE BOLT HOLES TO STRADDLE CENTER LINES (UNO).
5) THIS ISOMETRIC IS TO BE READ IN CONJUNCTION WITH DEVON NEC CORPORATION GS-5210 PIPING CLASS SPECIFICATIONS.
6) PIPING SPEC A13 IS TO SUPERCEDE A11 FOR ALL SMALL BORE VENTS, DRAINS AND INSTRUMENT CONNECTIONS AS PER SBLUE RFI #4.
7) HYDRO TEST TO BE CHARTED FOR 1 HR.
8) 1/8" WELD GAP HAS BEEN TAKEN INTO ACCOUNT FOR ALL BW AND SW CONNECTIONS.
9) SHOP TO VERIFY ALL DIMENSIONS AND ELEVATIONS AND COORDINATES PRIOR TO FABRICATION.
10) JOINT NON-DESTRUCTIVE EXAMINATION:
ALL JOINT: 20% VISUAL, BW: 10% RT, SW: 5% RT(FIT-UP) + 10% MT, FILLET WELDS: 10% MT.

REV.	D/M/Y	DESCRIPTION	BY	CHK.	APP.
0	28/08/2013	ISSUED FOR CONSTRUCTION	RR	BB	

LEGEND:
- ○ : WELD NO.
- ⬭ : MARK NO.
- FFW ○ : FIELD FIT WELD
- ✕ : FIELD WELD
- 4 : SPOOL NUMBER
- : PIPE SUPPORT

STD WELD PROC:	5B-102/103	PAINT SYSTEM:	SEE E&IL
L.T. WELD PROC:	5B-102/103	INSULATION:	NA
RATING/SPEC:	CL150/A11	SANDBLAST:	SSPC-SP6
HYDROTEST PSIG:	428	DESIGN TEMP 'F:	100
RADIOGRAPHY:	10%	DESIGN PRES PSIG:	285
STRESS RELIEVE:	NO		

5Blue Process Equipment Inc.

INTI DESIGNS

TITLE: DEVON NEC CORPORATION.
FERRIER CENTRAL PROCESSING FACILITY
CENTRAL OIL BATTERY - LIQUID EXTRACTION PLANT (LEP)
PIPING ISOMETRIC
LINE NO. 324-PG-A11-01339

CLIENT DOCUMENT NUMBER	ISOMETRIC NUMBER	REV.
TBD	5B1108-02-DR-80-003-2	0

THIS IS THE EXCLUSIVE PROPERTY OF INTI DESIGNS AND MAY NOT BE COPIED OR COMMUNICATED TO A THIRD PARTY WITHOUT THE WRITTEN AUTHORIZATION OF INTI DESIGNS.

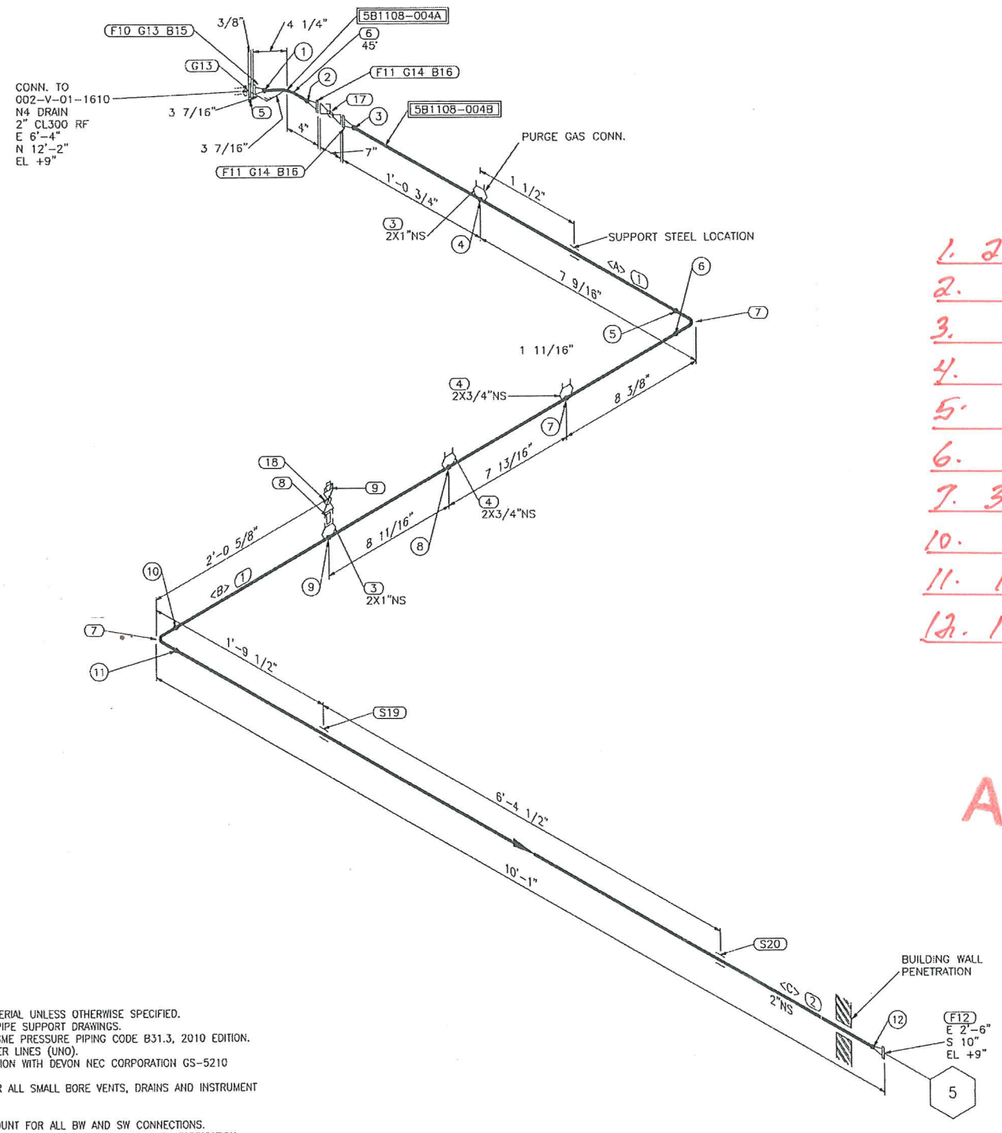

GENERAL NOTES:

1) ALL DIMENSIONS AND ELEVATIONS ARE IN IMPERIAL UNLESS OTHERWISE SPECIFIED.
2) REFER TO 5B1108-02-DR-80-000-1 FOR PIPE SUPPORT DRAWINGS.
3) SPOOL TO BE BUILT IN ACCORDANCE WITH ASME PRESSURE PIPING CODE B31.3, 2010 EDITION.
4) ALL FLANGE BOLT HOLES TO STRADDLE CENTER LINES (UNO).
5) THIS ISOMETRIC IS TO BE READ IN CONJUNCTION WITH DEVON NEC CORPORATION GS-5210 PIPING CLASS SPECIFICATIONS.
6) PIPING SPEC A13 IS TO SUPERCEDE A11 FOR ALL SMALL BORE VENTS, DRAINS AND INSTRUMENT CONNECTIONS AS PER 5BLUE RFI #4.
7) HYDRO TEST TO BE CHARTED FOR 1 HR.
8) 1/8" WELD GAP HAS BEEN TAKEN INTO ACCOUNT FOR ALL BW AND SW CONNECTIONS.
9) SHOP TO VERIFY ALL DIMENSIONS AND ELEVATIONS AND COORDINATES PRIOR TO FABRICATION.
10) JOINT NON-DESTRUCTIVE EXAMINATION:
ALL JOINT: 20% VISUAL, BW: 10% RT, SW: 5% RT(FIT-UP) + 10% MT, FILLET WELDS: 10% MT.

1. 2304-02929
2. 511773
3. 5B960
4. 58880
5. T&F
6. 13E00034
7. 3R3680/B422
10. 53172
11. 12/72669
12. 12/73144

AS BUILT

BILL OF MATERIAL

MARK	SIZE (INCH)	DESCRIPTION	QTY	WEIGHT (LBS)
		SHOP MATERIALS		
		PIPE		
1	2	PIPE, SCH 80, ASTM A106B, SMLS, B36.10	4.9'	24.3
2	2	PIPE, SCH 80, ASTM A333 GR6, SMLS, B36.10	9.7'	48.3
		FITTINGS		
3	2X1	THREADOLET, CL3000, ASTM A105N, MSS SP-97	2	1.3
4	2X3/4	THREADOLET, CL3000, ASTM A105N, MSS SP-97	2	0.7
5	2	SPEC BLIND, CL300, RF, ASTM A516 GR 70N, B16.48	1	3.0
6	2	45 DEG LR ELBOW, SCH 80, ASTM A234 WPB, B16.9	1	1.1
7	2	90 DEG LR ELBOW, SCH 80, ASTM A234 WPB, B16.9	2	4.4
8	1	NIPPLE, SCH 160, ASTM A106B, SMLS, B36.10 TBE (4.0000 LG)	1	2.9
9	1	SOLID ROUND HEAD PLUG, THRD, ASTM A105N, B16.11	1	0.8
		FLANGES		
10	2	FLANGE, CL300, SCH 80, RFWN, ASTM A105N, B16.5	1	9.0
11	2	FLANGE, CL150, SCH 80, RFWN, ASTM A105N, B16.5	2	12.0
12	2	FLANGE, CL150, SCH 80, RFWN, ASTM A350 LF2 CL1, B16.5	1	6.0
		GASKETS		
13	2	GASKET, CL300, RF, 1/8" THK, 316 SS SPIRAL WOUND, FLEX FILLER CGI, CS CENTERING RING, 316 SS INNER RING, B16.20	2	2.0
14	2	GASKET, CL150, RF, 1/8" THK, 316 SS SPIRAL WOUND, FLEX FILLER CGI, CS CENTERING RING, 316 SS INNER RING, B16.20	2	2.0
		BOLTS		
15	5/8X4	(8) STUDBOLT c/w 2 HEX NUTS, ASTM A193 GR B7, A194 GR 2H, B16.5	1	1.0
16	5/8X3 1/4	(4) STUDBOLT c/w 2 HEX NUTS, ASTM A193 GR B7, A194 GR 2H, B16.5	2	2.0
		VALVES / IN-LINE ITEMS		
17	2	BALL VALVE, CL150, RF, LEVER OP, (BV0106A)	1	33.0
18	1	BALL VALVE, CL800, THRD, LEVER OP, (BA8202A)	1	1.4
		SUPPORTS		
19	2	GU-2"	1	0.2
20	2	GU-2" & SA-4	1	0.2
		PIPE SPOOLS		
		5B1108-004A 5B1108-004B		

CUT PIPE LENGTH

PIECE NO	LENGTH (FT-INS)	N.S. (INS)	REMARKS	END ONE	END TWO	ITEM CODE
<A>	1'2 9/16"	2		BEVEL	BEVEL	14
<B>	3'7 1/4"	2		BEVEL	BEVEL	14
<C>	9'7 1/4"	2		BEVEL	BEVEL	17

TOTAL SHOP WEIGHT 155.3
TOTAL FIELD WEIGHT 0.0
TOTAL WEIGHT-THIS DWG 155.3

WELD NO.	SIZE	NOM. THK	WELD TYPE	DESCRIPTION	WELDER ID	DATE	NDE REPORT No.	V.T.
12	2"	SCH 80	BW					
11	2"	SCH 80	BW					
10	2"	SCH 80	BW					
9	1"	CL3000	LET					
8	3/4"	CL3000	LET					
7	3/4"	CL3000	LET					
6	2"	SCH 80	BW					
5	2"	SCH 80	BW					
4	1"	CL3000	LET					
3	2"	SCH 80	BW					
2	2"	SCH 80	BW					
1	2"	SCH 80	BW					

REV.	D/M/Y	DESCRIPTION	BY	CHK	APP
0	29/08/2013	ISSUED FOR CONSTRUCTION	RR	BB	

LEGEND:
- ○ : WELD NO.
- ⬭ : MARK NO.
- FFW ○ : FIELD FIT WELD
- ✕ : FIELD WELD
- 4 : SPOOL NUMBER
- ═ : PIPE SUPPORT

STD WELD PROC:	5B-102/103	PAINT SYSTEM:	SEE E&IL
L.T. WELD PROC:	5B-102/103	INSULATION:	NA
RATING/SPEC:	CL150/A11	SANDBLAST:	SSPC-SP6
HYDROTEST PSIG:	428	DESIGN TEMP °F:	100
RADIOGRAPHY:	10%	DESIGN PRES PSIG:	285
STRESS RELIEVE:	NO		

5Blue Process Equipment Inc.

INTI DESIGNS

TITLE: DEVON NEC CORPORATION.
FERRIER CENTRAL PROCESSING FACILITY
CENTRAL OIL BATTERY - LIQUID EXTRACTION PLANT (LEP)
PIPING ISOMETRIC
LINE NO. 60-HCD-A11-23460

CLIENT DOCUMENT NUMBER	ISOMETRIC NUMBER	REV.
TBD	5B1108-02-DR-80-004-1	0

THIS IS THE EXCLUSIVE PROPERTY OF INTI DESIGNS AND MAY NOT BE COPIED OR COMMUNICATED TO A THIRD PARTY WITHOUT THE WRITTEN AUTHORIZATION OF INTI DESIGNS.

N

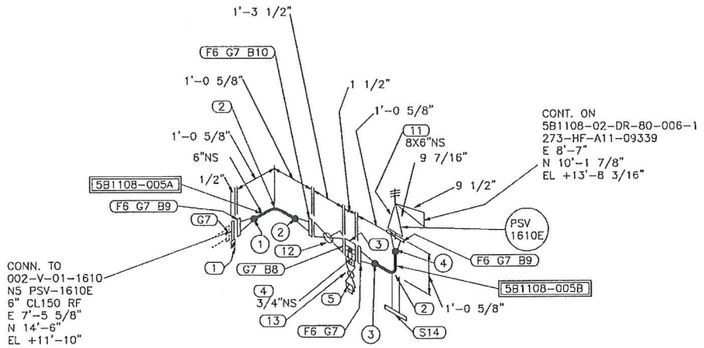

BILL OF MATERIAL

MARK	SIZE (INCH)	DESCRIPTION	QTY	WEIGHT (LBS)
		SHOP MATERIALS		
		FITTINGS		
1	6	SPEC BLIND, CL150, RF, ASTM A516 GR 70N, B16.48	1	12.0
2	6	90 DEG LR ELBOW, SCH STD, ASTM A234 WPB, B16.9	2	45.6
3	6	BLEED RING, CL150, RF, C/W (1) 3/4" THRD CONN ASTM A516 70N	1	1.0
4	3/4	NIPPLE, SCH 160, ASTM A106B, SMLS, B36.10 TBE (4.0000 LG)	1	2.0
5	3/4	SOLID ROUND HEAD PLUG, THRD, ASTM A105N, B16.11	1	0.4
		FLANGES		
6	6	FLANGE, CL150, SCH STD, RFWN, ASTM A105N, B16.5	4	96.0
		GASKETS		
7	6	GASKET, CL150, RF, 1/8" THK, 316 SS SPIRAL WOUND, FLEX FILLER CGI, CS CENTERING RING, 316 SS INNER RING, B16.20	6	6.0
		BOLTS		
8	3/4X5 3/4	(8) STUDBOLT c/w 2 HEX NUTS, ASTM A193 GR B7, A194 GR 2H, B16.5	1	1.0
9	3/4X4 3/4	(8) STUDBOLT c/w 2 HEX NUTS, ASTM A193 GR B7, A194 GR 2H, B16.5	2	2.0
10	3/4X4	(8) STUDBOLT c/w 2 HEX NUTS, ASTM A193 GR B7, A194 GR 2H, B16.5	1	1.0
		VALVES / IN-LINE ITEMS		
11	8X6	RELIEF VALVE, CL150 x CL150, RF (PSV-1610E)	1	430.0
12	6	BALL VALVE, CL150, RF, LEVER OP, (BA0106A1)	1	176.0
13	3/4	BALL VALVE, CL800, THRD, LEVER OP, (BA8202A)	1	0.8
		SUPPORTS		
14	6	L11-2-6" (L= 1'-10")	1	35.0
		PIPE SPOOLS		
		5B1108-005A 5B1108-005B		

1. UFM
2. 0547
6. A26T3

AS BUILT

TOTAL SHOP WEIGHT 808.8
TOTAL FIELD WEIGHT 0.0
TOTAL WEIGHT-THIS DWG 808.8

WELD NO.	SIZE	NOM. THK	WELD TYPE	DESCRIPTION	WELDER ID	DATE	NDE REPORT No.	V.T.
4	6"	SCH STD	BW					
3	6"	SCH STD	BW					
2	6"	SCH STD	BW					
1	6"	SCH STD	BW					

GENERAL NOTES:

1) ALL DIMENSIONS AND ELEVATIONS ARE IN IMPERIAL UNLESS OTHERWISE SPECIFIED.
2) REFER TO 5B1108-02-DR-80-000-1 FOR PIPE SUPPORT DRAWINGS.
3) SPOOL TO BE BUILT IN ACCORDANCE WITH ASME PRESSURE PIPING CODE B31.3, 2010 EDITION.
4) ALL FLANGE BOLT HOLES TO STRADDLE CENTER LINES (UNO).
5) THIS ISOMETRIC IS TO BE READ IN CONJUNCTION WITH DEVON NEC CORPORATION GS-5210 PIPING CLASS SPECIFICATIONS.
6) PIPING SPEC A13 IS TO SUPERCEDE A11 FOR ALL SMALL BORE VENTS, DRAINS AND INSTRUMENT CONNECTIONS AS PER 5BLUE RFI #4.
7) HYDRO TEST TO BE CHARTED FOR 1 HR.
8) 1/8" WELD GAP HAS BEEN TAKEN INTO ACCOUNT FOR ALL BW AND SW CONNECTIONS.
9) SHOP TO VERIFY ALL DIMENSIONS AND ELEVATIONS AND COORDINATES PRIOR TO FABRICATION.
10) JOINT NON-DESTRUCTIVE EXAMINATION:
ALL JOINT: 20% VISUAL, BW: 10% RT, SW: 5% RT(FIT-UP) + 10% MT, FILLET WELDS: 10% MT.

REV.	D/M/Y	DESCRIPTION	BY	CHK	APP
0	23/08/2013	ISSUED FOR CONSTRUCTION	RR	BB	

LEGEND:
○ : WELD NO.
▭ : MARK NO.
FFW ○ : FIELD FIT WELD
✕ : FIELD WELD
4 : SPOOL NUMBER
: PIPE SUPPORT

STD WELD PROC:	5B-102/103	PAINT SYSTEM:	SEE E&IL
L.T. WELD PROC:	5B-102/103	INSULATION:	NA
RATING/SPEC:	CL150/A11	SANDBLAST:	SSPC-SP6
HYDROTEST PSIG:	428	DESIGN TEMP °F:	100
RADIOGRAPHY:	10%	DESIGN PRES PSIG:	285
STRESS RELIEVE:	NO		

5Blue Process Equipment Inc.

INTI DESIGNS

TITLE: DEVON NEC CORPORATION.
FERRIER CENTRAL PROCESSING FACILITY
CENTRAL OIL BATTERY - LIQUID EXTRACTION PLANT (LEP)
PIPING ISOMETRIC
LINE NO. 168-PG-A11-01341

CLIENT DOCUMENT NUMBER	ISOMETRIC NUMBER	REV.
TBD	5B1108-02-DR-80-005-1	0

THIS IS THE EXCLUSIVE PROPERTY OF INTI DESIGNS AND MAY NOT BE COPIED OR COMMUNICATED TO A THIRD PARTY WITHOUT THE WRITTEN AUTHORIZATION OF INTI DESIGNS.

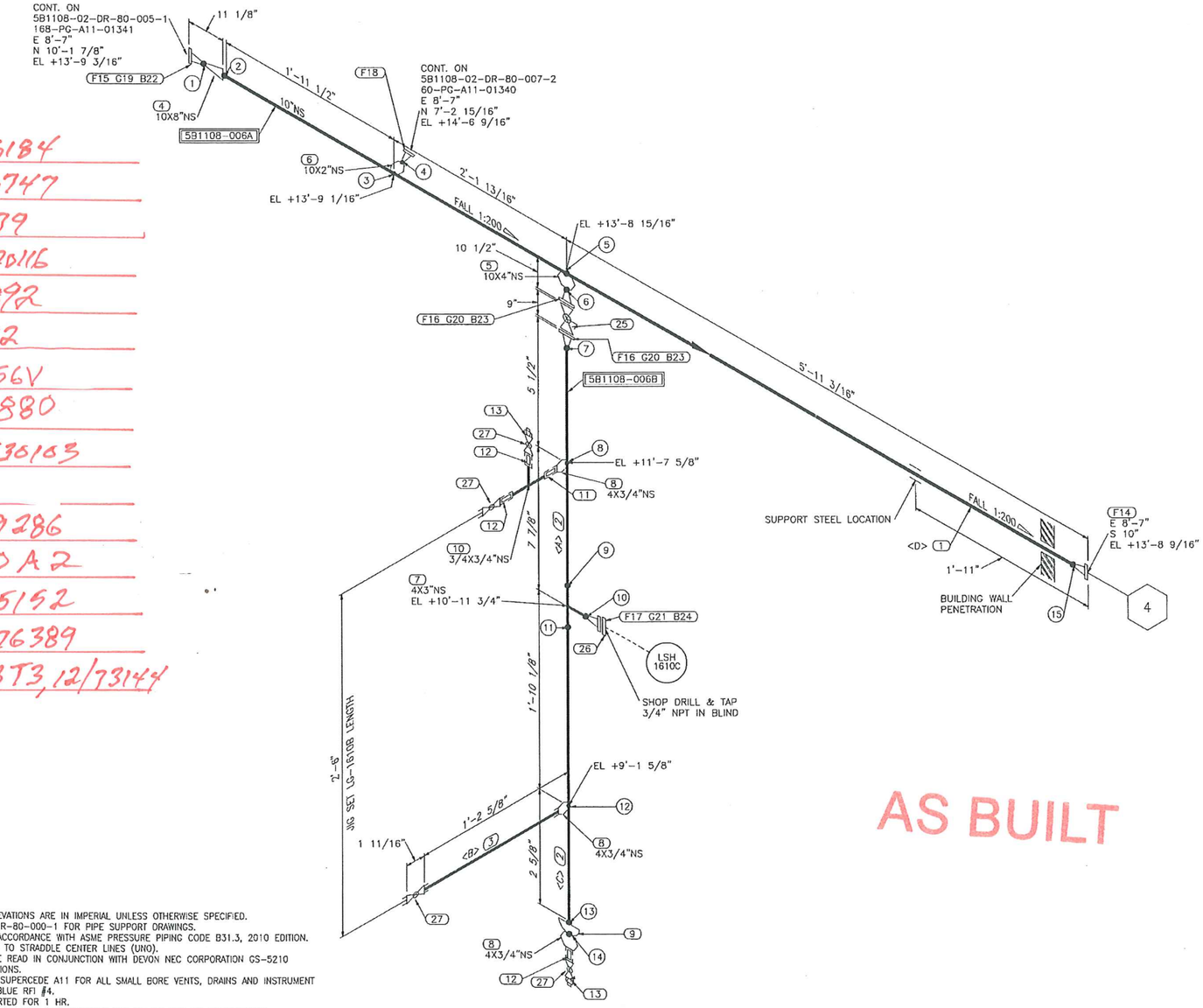

1. W11306184
2. W21103747
3. 576179
4. 12C20116
5. 58892
6. 58912
7. 3A756V
8. 58880
9. 12F30103
14. 11/39286
15. 800A2
16. 12/35152
17. 13/76389
18. A43T3, 12/73144

AS BUILT

BILL OF MATERIAL

MARK	SIZE (INCH)	DESCRIPTION	QTY	WEIGHT (LBS)
		SHOP MATERIALS		
		PIPE		
1	10	PIPE, SCH STD, ASTM A333 GR6, SMLS, B36.10	9.7'	392.6
2	4	PIPE, SCH STD, ASTM A106B, SMLS, B36.10	2.3'	23.9
3	3/4	PIPE, SCH 160, ASTM A106B, SMLS, B36.10	1.0'	1.5
		FITTINGS		
4	10X8	CON REDUCER, SCH STD, ASTM A234 WPB, B16.9	1	23.2
5	10X4	WELDOLET, SCH STD, ASTM A105N, MSS SP-97	1	6.3
6	10X2	WELDOLET, SCH 80, ASTM A105N, MSS SP-97	1	1.8
7	4X3	RED TEE, SCH STD, ASTM A234 WPB, B16.9	1	15.0
8	4X3/4	THREADOLET, CL3000, ASTM A105N, MSS SP-97	3	1.1
9	4	CAP, SCH STD, ASTM A234 WPB, B16.9	1	2.5
10	3/4X3/4	TEE, CL3000, THRD, ASTM A105N, B16.11	1	1.9
11	3/4	NIPPLE, SCH 160, ASTM A106B, SMLS, B36.10 TBE (6.0000 LG)	1	2.0
12	3/4	NIPPLE, SCH 160, ASTM A106B, SMLS, B36.10 TBE (4.0000 LG)	3	5.9
13	3/4	SOLID ROUND HEAD PLUG, THRD, ASTM A105N, B16.11	2	0.8
		FLANGES		
14	10	FLANGE, CL150, SCH STD, RFWN, ASTM A350 LF2 CL1, B16.5	1	52.0
15	8	FLANGE, CL150, SCH STD, RFWN, ASTM A105N, B16.5	1	39.0
16	4	FLANGE, CL150, SCH STD, RFWN, ASTM A105N, B16.5	2	30.0
17	3	FLANGE, CL150, SCH STD, RFWN, ASTM A105N, B16.5	1	11.3
18	2	FLANGE, CL150, SCH 80, RFWN, ASTM A105N, B16.5	1	6.0
		GASKETS		
19	8	GASKET, CL150, RF, 1/8" THK, 316 SS SPIRAL WOUND, FLEX FILLER CGI, CS CENTERING RING, 316 SS INNER RING, B16.20	1	1.0
20	4	GASKET, CL150, RF, 1/8" THK, 316 SS SPIRAL WOUND, FLEX FILLER CGI, CS CENTERING RING, 316 SS INNER RING, B16.20	2	2.0
21	3	GASKET, CL150, RF, 1/8" THK, 316 SS SPIRAL WOUND, FLEX FILLER CGI, CS CENTERING RING, 316 SS INNER RING, B16.20	1	1.0
		BOLTS		
22	3/4X4 1/4	(8) STUDBOLT c/w 2 HEX NUTS, ASTM A193 GR B7, A194 GR 2H, B16.5	1	1.0
23	5/8X3 3/4	(8) STUDBOLT c/w 2 HEX NUTS, ASTM A193 GR B7, A194 GR 2H, B16.5	2	2.0
24	5/8X3 3/4	(4) STUDBOLT c/w 2 HEX NUTS, ASTM A193 GR B7, A194 GR 2H, B16.5	1	1.0
		VALVES / IN-LINE ITEMS		
25	4	BALL VALVE, CL150, RF, LEVER OP, (BN0106A1)	1	113.0
26	3	HUB BLIND FLANGE, CL150, RF, ASTM A105N, B16.5 (c/w 3/4" NPT DRILL & TAP)	1	9.0
27	3/4	BALL VALVE, CL800, THRD, LEVER OP, (BA8202A)	4	3.1
		PIPE SPOOLS		
		5B1108-006A 5B1108-006B		

CUT PIPE LENGTH

PIECE NO	LENGTH (FT-INS)	N.S. (INS)	REMARKS	END ONE	END TWO	ITEM CODE
<A>	6"	4		BEVEL	BEVEL	29
<B>	11 7/8"	3/4		SCREWED	SCREWED	10
<C>	1'8 1/2"	4		BEVEL	BEVEL	29
<D>	9'8 3/8"	10		BEVEL	BEVEL	36

TOTAL SHOP WEIGHT 750.3
TOTAL FIELD WEIGHT 0.0
TOTAL WEIGHT-THIS DWG 751.3

WELD NO.	SIZE	NOM. THK	WELD TYPE	DESCRIPTION	WELDER ID	DATE	NDE REPORT No.	V.T.
15	10"	SCH STD	BW					
14	3/4"	CL3000	LET					
13	4"	SCH STD	BW					
12	3/4"	CL3000	LET					
11	4"	SCH STD	BW					
10	3"	SCH STD	BW					
9	4"	SCH STD	BW					
8	3/4"	CL3000	LET					
7	4"	SCH STD	BW					
6	4"	SCH STD	BW					
5	4"	SCH STD	LET					
4	2"	SCH 80	BW					
3	2"	SCH 80	LET					
2	10"	SCH STD	BW					
1	8"	SCH STD	BW					

GENERAL NOTES:

1) ALL DIMENSIONS AND ELEVATIONS ARE IN IMPERIAL UNLESS OTHERWISE SPECIFIED.
2) REFER TO 5B1108-02-DR-80-000-1 FOR PIPE SUPPORT DRAWINGS.
3) SPOOL TO BE BUILT IN ACCORDANCE WITH ASME PRESSURE PIPING CODE B31.3, 2010 EDITION.
4) ALL FLANGE BOLT HOLES TO STRADDLE CENTER LINES (UNO).
5) THIS ISOMETRIC IS TO BE READ IN CONJUNCTION WITH DEVON NEC CORPORATION GS-5210 PIPING CLASS SPECIFICATIONS.
6) PIPING SPEC A13 IS TO SUPERCEDE A11 FOR ALL SMALL BORE VENTS, DRAINS AND INSTRUMENT CONNECTIONS AS PER 5BLUE RFI #4.
7) HYDRO TEST TO BE CHARTED FOR 1 HR.
8) 1/8" WELD GAP HAS BEEN TAKEN INTO ACCOUNT FOR ALL BW AND SW CONNECTIONS.
9) SHOP TO VERIFY ALL DIMENSIONS AND ELEVATIONS AND COORDINATES PRIOR TO FABRICATION.
10) JOINT NON-DESTRUCTIVE EXAMINATION:
ALL JOINT: 20% VISUAL, BW: 10% RT, SW: 5% RT(FIT-UP) + 10% MT, FILLET WELDS: 10% MT.

REV.	D/M/Y	DESCRIPTION	BY	CHK	APP
0	08/10/2013	ISSUED FOR CONSTRUCTION	RR	BB	

LEGEND:
- ○ : WELD NO.
- ▭ : MARK NO.
- FFW ○ : FIELD FIT WELD
- ✕ : FIELD WELD
- 4 : SPOOL NUMBER
- : PIPE SUPPORT

STD WELD PROC:	5B-102/103	PAINT SYSTEM:	SEE E&IL
L.T. WELD PROC:	5B-102/103	INSULATION:	NA
RATING/SPEC:	CL150/A11	SANDBLAST:	SSPC-SP6
HYDROTEST PSIG:	428	DESIGN TEMP °F:	100
RADIOGRAPHY:	10%	DESIGN PRES PSIG:	285
STRESS RELIEVE:	NO		

5Blue Process Equipment Inc.

INTI DESIGNS

TITLE: DEVON NEC CORPORATION.
FERRIER CENTRAL PROCESSING FACILITY
CENTRAL OIL BATTERY – LIQUID EXTRACTION PLANT (LEP)
PIPING ISOMETRIC
LINE NO. 273-HF-A11-09339

CLIENT DOCUMENT NUMBER	ISOMETRIC NUMBER	REV.
TBD	5B1108-02-DR-80-006-1	0

THIS IS THE EXCLUSIVE PROPERTY OF INTI DESIGNS AND MAY NOT BE COPIED OR COMMUNICATED TO A THIRD PARTY WITHOUT THE WRITTEN AUTHORIZATION OF INTI DESIGNS.

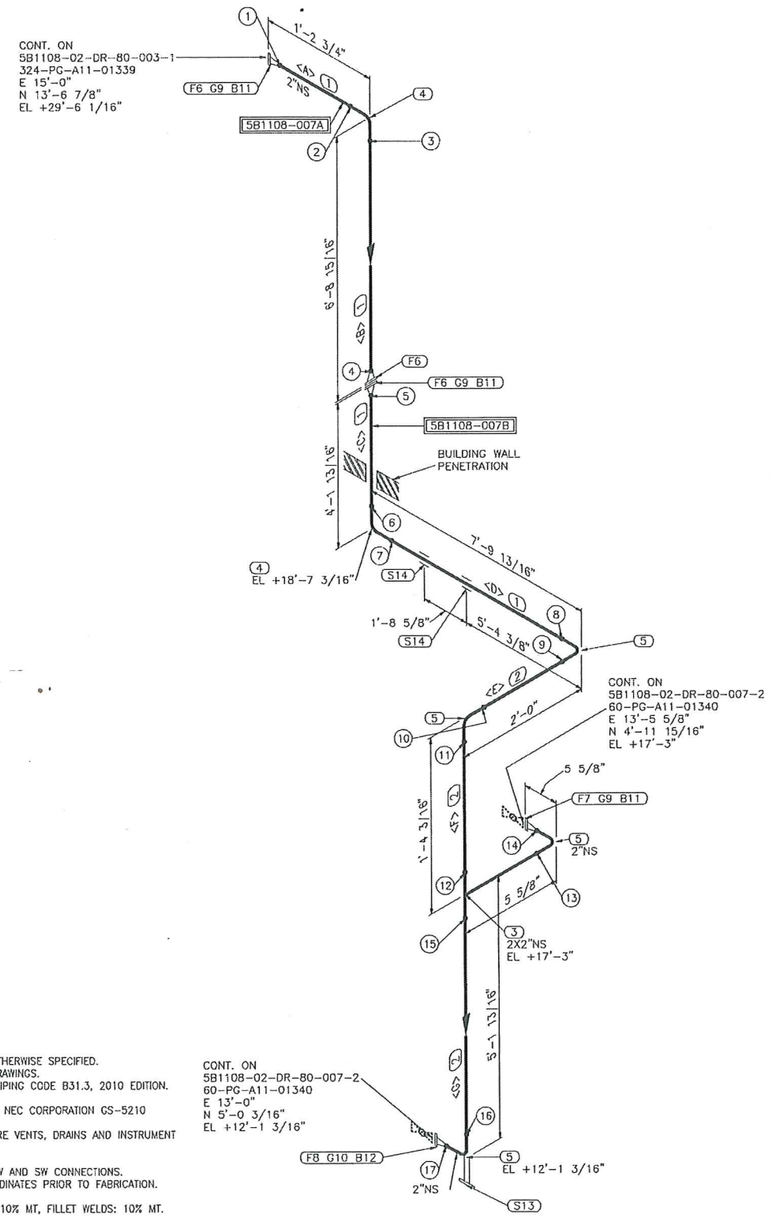

1. 511773
2. 2304-02929
3. 2L584V
4. 12M01011
5. 3A3680
6. 12/73144
7. 12/72669
8. 531T2

AS BUILT

BILL OF MATERIAL

MARK	SIZE (INCH)	DESCRIPTION	QTY	WEIGHT (LBS)
		SHOP MATERIALS		
		PIPE		
1	2	PIPE, SCH 80, ASTM A333 GR6, SMLS, B36.10	18.0'	90.3
2	2	PIPE, SCH 80, ASTM A106B, SMLS, B36.10	7.1'	35.3
		FITTINGS		
3	2X2	TEE, SCH 80, ASTM A234 WPB, B16.9	1	3.7
4	2	90 DEG LR ELBOW, SCH 80, ASTM A420 WPL6, B16.9	2	4.4
5	2	90 DEG LR ELBOW, SCH 80, ASTM A234 WPB, B16.9	4	8.8
		FLANGES		
6	2	FLANGE, CL150, SCH 80, RFWN, ASTM A350 LF2 CL1, B16.5	3	18.0
7	2	FLANGE, CL150, SCH 80, RFWN, ASTM A105N, B16.5	1	6.0
8	2	FLANGE, CL300, SCH 80, RFWN, ASTM A105N, B16.5	1	9.0
		GASKETS		
9	2	GASKET, CL150, RF, 1/8" THK, 316 SS SPIRAL WOUND, FLEX FILLER CGI, CS CENTERING RING, 316 SS INNER RING, B16.20	3	3.0
10	2	GASKET, CL300, RF, 1/8" THK, 316 SS SPIRAL WOUND, FLEX FILLER CGI, CS CENTERING RING, 316 SS INNER RING, B16.20	1	1.0
		BOLTS		
11	5/8X3 1/4	(4) STUDBOLT c/w 2 HEX NUTS, ASTM A193 GR B7, A194 GR 2H, B16.5	3	3.0
12	5/8X3 1/2	(8) STUDBOLT c/w 2 HEX NUTS, ASTM A193 GR B7, A194 GR 2H, B16.5	1	1.0
		SUPPORTS		
13	2	L10-3-2" (L= 2'-1 3/16")	1	24.0
14	2	GU-2"	2	0.6
		PIPE SPOOLS		
		5B1108-007A 5B1108-007B		

CUT PIPE LENGTH

PIECE NO	LENGTH (FT-INS)	N.S. (INS)	REMARKS	END ONE	END TWO	ITEM CODE
<A>	9"	2		BEVEL	BEVEL	46
<B>	6'3 3/16"	2		BEVEL	BEVEL	46
<C>	3'8 1/16"	2		BEVEL	BEVEL	46
<D>	7'3 9/16"	2		BEVEL	BEVEL	46
<E>	1'5 3/4"	2		BEVEL	BEVEL	41
<F>	10 7/16"	2		BEVEL	BEVEL	41
<G>	4'8 1/16"	2		BEVEL	BEVEL	41

TOTAL SHOP WEIGHT 208.0
TOTAL FIELD WEIGHT 0.0
TOTAL WEIGHT-THIS DWG 208.0

WELD NO.	SIZE	NOM. THK	WELD TYPE	DESCRIPTION	WELDER ID	DATE	NDE REPORT No.	V.T.
17	2"	SCH 80	BW					
16	2"	SCH 80	BW					
15	2"	SCH 80	BW					
14	2"	SCH 80	BW					
13	2"	SCH 80	BW					
12	2"	SCH 80	BW					
11	2"	SCH 80	BW					
10	2"	SCH 80	BW					
9	2"	SCH 80	BW					
8	2"	SCH 80	BW					
7	2"	SCH 80	BW					
6	2"	SCH 80	BW					
5	2"	SCH 80	BW					
4	2"	SCH 80	BW					
3	2"	SCH 80	BW					
2	2"	SCH 80	BW					
1	2"	SCH 80	BW					

GENERAL NOTES:

1) ALL DIMENSIONS AND ELEVATIONS ARE IN IMPERIAL UNLESS OTHERWISE SPECIFIED.
2) REFER TO 5B1108-02-DR-80-000-1 FOR PIPE SUPPORT DRAWINGS.
3) SPOOL TO BE BUILT IN ACCORDANCE WITH ASME PRESSURE PIPING CODE B31.3, 2010 EDITION.
4) ALL FLANGE BOLT HOLES TO STRADDLE CENTER LINES (UNO).
5) THIS ISOMETRIC IS TO BE READ IN CONJUNCTION WITH DEVON NEC CORPORATION CS-5210 PIPING CLASS SPECIFICATIONS.
6) PIPING SPEC A13 IS TO SUPERCEDE A11 FOR ALL SMALL BORE VENTS, DRAINS AND INSTRUMENT CONNECTIONS AS PER 5BLUE RFI #4.
7) HYDRO TEST TO BE CHARTED FOR 1 HR.
8) 1/8" WELD GAP HAS BEEN TAKEN INTO ACCOUNT FOR ALL BW AND SW CONNECTIONS.
9) SHOP TO VERIFY ALL DIMENSIONS AND ELEVATIONS AND COORDINATES PRIOR TO FABRICATION.
10) JOINT NON-DESTRUCTIVE EXAMINATION:
ALL JOINT: 20% VISUAL, BW: 10% RT, SW: 5% RT(FIT-UP) + 10% MT, FILLET WELDS: 10% MT.

REV.	D/M/Y	DESCRIPTION	BY	CHK	APP
0	29/08/2013	ISSUED FOR CONSTRUCTION	RR	BB	

LEGEND:
- ○ : WELD NO.
- ▭ : MARK NO.
- FFW ○ : FIELD FIT WELD
- ✕ : FIELD WELD
- 4 : SPOOL NUMBER
- : PIPE SUPPORT

STD WELD PROC:	5B-102/103	PAINT SYSTEM:	SEE E&IL
L.T. WELD PROC:	5B-102/103	INSULATION:	NA
RATING/SPEC:	CL150/A11	SANDBLAST:	SSPC-SP6
HYDROTEST PSIG:	428	DESIGN TEMP 'F:	100
RADIOGRAPHY:	10%	DESIGN PRES PSIG:	285
STRESS RELIEVE:	NO		

5Blue Process Equipment Inc.

INTI DESIGNS

TITLE: DEVON NEC CORPORATION.
FERRIER CENTRAL PROCESSING FACILITY
CENTRAL OIL BATTERY – LIQUID EXTRACTION PLANT (LEP)
PIPING ISOMETRIC
LINE NO. 60-PG-A11-01340

CLIENT DOCUMENT NUMBER	ISOMETRIC NUMBER	REV.
TBD	5B1108-02-DR-80-007-1	0

THIS IS THE EXCLUSIVE PROPERTY OF INTI DESIGNS AND MAY NOT BE COPIED OR COMMUNICATED TO A THIRD PARTY WITHOUT THE WRITTEN AUTHORIZATION OF INTI DESIGNS.

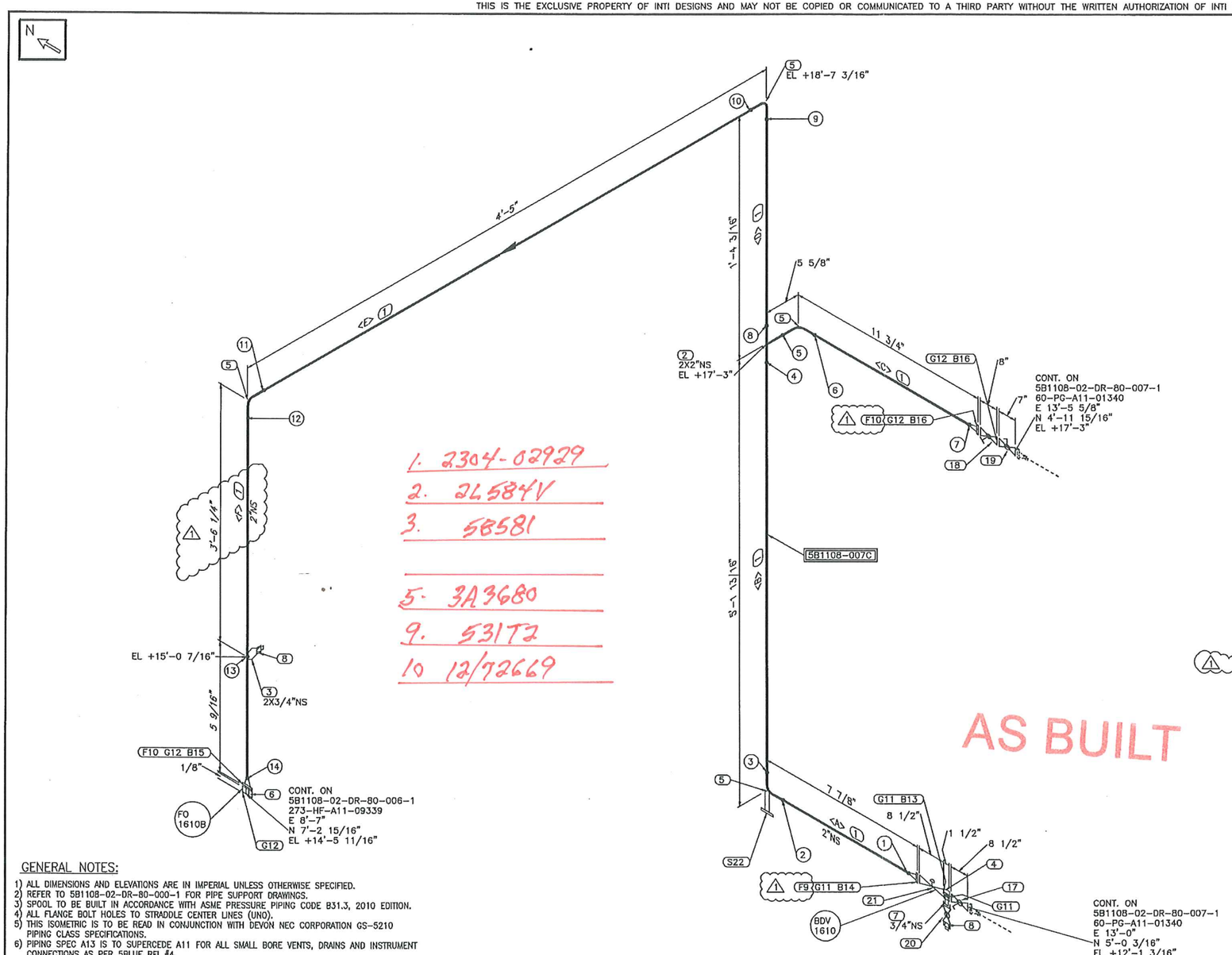

1. 2304-02929
2. 24584V
3. 5B581
5. 3A3680
9. 531T2
10 12/72669

AS BUILT

GENERAL NOTES:

1) ALL DIMENSIONS AND ELEVATIONS ARE IN IMPERIAL UNLESS OTHERWISE SPECIFIED.
2) REFER TO 5B1108-02-DR-80-000-1 FOR PIPE SUPPORT DRAWINGS.
3) SPOOL TO BE BUILT IN ACCORDANCE WITH ASME PRESSURE PIPING CODE B31.3, 2010 EDITION.
4) ALL FLANGE BOLT HOLES TO STRADDLE CENTER LINES (UNO).
5) THIS ISOMETRIC IS TO BE READ IN CONJUNCTION WITH DEVON NEC CORPORATION GS-5210 PIPING CLASS SPECIFICATIONS.
6) PIPING SPEC A13 IS TO SUPERCEDE A11 FOR ALL SMALL BORE VENTS, DRAINS AND INSTRUMENT CONNECTIONS AS PER 5BLUE RFI #4.
7) HYDRO TEST TO BE CHARTED FOR 1 HR.
8) 1/8" WELD GAP HAS BEEN TAKEN INTO ACCOUNT FOR ALL BW AND SW CONNECTIONS.
9) SHOP TO VERIFY ALL DIMENSIONS AND ELEVATIONS AND COORDINATES PRIOR TO FABRICATION.
10) JOINT NON-DESTRUCTIVE EXAMINATION:
ALL JOINT: 20% VISUAL, BW: 10% RT, SW: 5% RT(FIT-UP) + 10% MT, FILLET WELDS: 10% MT.

BILL OF MATERIAL

MARK	SIZE (INCH)	DESCRIPTION	QTY	WEIGHT (LBS)
		SHOP MATERIALS		
		PIPE		
1	2	PIPE, SCH 80, ASTM A106B, SMLS, B36.10	13.8'	68.9
		FITTINGS		
2	2X2	TEE, SCH 80, ASTM A234 WPB, B16.9	1	3.7
3	2X3/4	THREADOLET, CL3000, ASTM A105N, MSS SP-97	1	0.4
4	2	BLEED RING, CL300, RF, C/W (1) 3/4" THRD CONN ASTM A516 70N	1	1.0
5	2	90 DEG LR ELBOW, SCH 80, ASTM A234 WPB, B16.9	4	8.8
6	2	FLOW ORIFICE, CL150, RF (FO-1610B)	1	1.0
7	3/4	NIPPLE, SCH 160, ASTM A106B, SMLS, B36.10 TBE (4.0000 LG)	1	2.0
8	3/4	SOLID ROUND HEAD PLUG, THRD, ASTM A105N, B16.11	2	0.8
		FLANGES		
9	2	FLANGE, CL300, SCH 80, RFWN, ASTM A105N, B16.5	1	9.0
10	2	FLANGE, CL150, SCH 80, RFWN, ASTM A105N, B16.5	2	12.0
		GASKETS		
11	2	GASKET, CL300, RF, 1/8" THK, 316 SS SPIRAL WOUND, FLEX FILLER CGI, CS CENTERING RING, 316 SS INNER RING, B16.20	3	3.0
12	2	GASKET, CL150, RF, 1/8" THK, 316 SS SPIRAL WOUND, FLEX FILLER CGI, CS CENTERING RING, 316 SS INNER RING, B16.20	4	4.0
		BOLTS		
13	5/8X5 1/4	(8) STUDBOLT c/w 2 HEX NUTS, ASTM A193 GR B7, A194 GR 2H, B16.5	1	1.0
14	5/8X3 1/2	(8) STUDBOLT c/w 2 HEX NUTS, ASTM A193 GR B7, A194 GR 2H, B16.5	1	1.0
15	5/8X3 1/2	(4) STUDBOLT c/w 2 HEX NUTS, ASTM A193 GR B7, A194 GR 2H, B16.5	1	1.0
16	5/8X3 1/4	(4) STUDBOLT c/w 2 HEX NUTS, ASTM A193 GR B7, A194 GR 2H, B16.5	2	2.0
		VALVES / IN-LINE ITEMS		
17	2	BALL VALVE, CL300, RF, LEVER OP, (BA0306A1)	1	38.0
18	2	GLOBE VALVE, CL150, RF, HW OP, (LA0106A1)	1	47.0
19	2	BALL VALVE, CL150, RF, LEVER OP, (BA0106A1)	1	33.0
20	3/4	BALL VALVE, CL800, THRD, LEVER OP, (BA8202A)	1	0.8
		INSTRUMENTS		
21	2	CONTROL VALVE, CL300, RF TAG (BDV-1610)	1	61.0
		SUPPORTS		
22	2	L10-3-2" (L= 2'-1 3/16")	1	24.1
		PIPE SPOOLS		
		5B1108-007C		

CUT PIPE LENGTH

PIECE NO	LENGTH (FT-INS)	N.S. (INS)	REMARKS	END ONE	END TWO	ITEM CODE
<A>	1 7/8"	2		BEVEL	BEVEL	41
<B>	4'8 1/16"	2		BEVEL	BEVEL	41
<C>	6"	2		BEVEL	BEVEL	41
<D>	10 7/16"	2		BEVEL	BEVEL	41
<E>	3'10 3/4"	2		BEVEL	BEVEL	41
<F>	3'7"	2		BEVEL	BEVEL	41

TOTAL SHOP WEIGHT 323.5
TOTAL FIELD WEIGHT 0.0
TOTAL WEIGHT-THIS DWG 323.5

WELD NO.	SIZE	NOM. THK	WELD TYPE	DESCRIPTION	WELDER ID	DATE	NDE REPORT No.	V.T.
14	2"	SCH 80	BW					
13	3/4"	CL3000	LET					
12	2"	SCH 80	BW					
11	2"	SCH 80	BW					
10	2"	SCH 80	BW					
9	2"	SCH 80	BW					
8	2"	SCH 80	BW					
7	2"	SCH 80	BW					
6	2"	SCH 80	BW					
5	2"	SCH 80	BW					
4	2"	SCH 80	BW					
3	2"	SCH 80	BW					
2	2"	SCH 80	BW					
1	2"	SCH 80	BW					

REV.	D/M/Y	DESCRIPTION	BY	CHK	APP
1	24/10/2013	REVISED AS NOTED	RR	BB	
0	29/08/2013	ISSUED FOR CONSTRUCTION	RR	BB	

LEGEND:
○ : WELD NO.
⬭ : MARK NO.
FFW ○ : FIELD FIT WELD
✕ : FIELD WELD
4 : SPOOL NUMBER
: PIPE SUPPORT

STD WELD PROC:	5B-102/103	PAINT SYSTEM:	SEE E&IL
L.T. WELD PROC:	5B-102/103	INSULATION:	NA
RATING/SPEC:	CL150/A11	SANDBLAST:	SSPC-SP6
HYDROTEST PSIG:	428	DESIGN TEMP °F:	100
RADIOGRAPHY:	10%	DESIGN PRES PSIG:	285
STRESS RELIEVE:	NO		

5Blue Process Equipment Inc.

INTI DESIGNS

TITLE: DEVON NEC CORPORATION.
FERRIER CENTRAL PROCESSING FACILITY
CENTRAL OIL BATTERY - LIQUID EXTRACTION PLANT (LEP)
PIPING ISOMETRIC
LINE NO. 60-PG-A11-01340

CLIENT DOCUMENT NUMBER	ISOMETRIC NUMBER	REV.
TBD	5B1108-02-DR-80-007-2	1

THIS IS THE EXCLUSIVE PROPERTY OF INTI DESIGNS AND MAY NOT BE COPIED OR COMMUNICATED TO A THIRD PARTY WITHOUT THE WRITTEN AUTHORIZATION OF INTI DESIGNS.

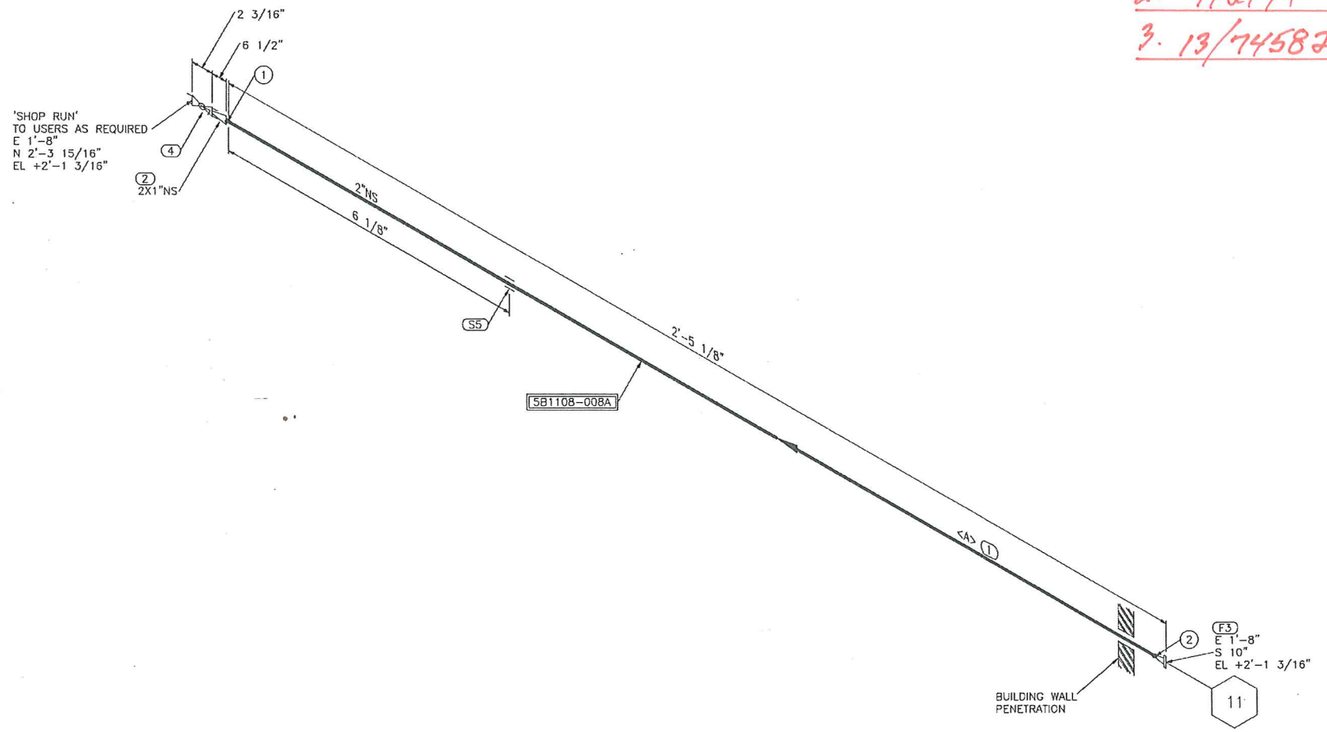

1. 511773
2. H2197
3. 13/74582

BILL OF MATERIAL

MARK	SIZE (INCH)	DESCRIPTION	QTY	WEIGHT (LBS)
		SHOP MATERIALS		
		PIPE		
1	2	PIPE, SCH 80, ASTM A333 GR6, SMLS, B36.10	2.3'	11.1
		FITTINGS		
2	2X1	CONC SWAGE, SCH 80x160, ASTM A420 WPL6, SMLS, MSS SP-95 BLE-TSE	1	2.0
		FLANGES		
3	2	FLANGE, CL150, SCH 80, RFWN, ASTM A350 LF2 CL1, B16.5	1	6.0
		VALVES / IN-LINE ITEMS		
4	1	BALL VALVE, CL800, THRD, LEVER OP, (BAB202A)	1	1.4
		SUPPORTS		
5	2	GU-2" & SA-4	1	0.2
		PIPE SPOOLS		
		5B1108-008A		

CUT PIPE LENGTH

PIECE NO	LENGTH (FT-INS)	N.S. (INS)	REMARKS	END ONE	END TWO	ITEM CODE
<A>	2'2 1/2"	2		BEVEL	BEVEL	5

AS BUILT

TOTAL SHOP WEIGHT 20.6
TOTAL FIELD WEIGHT 0.0
TOTAL WEIGHT-THIS DWG 20.6

WELD NO.	SIZE	NOM. THK	WELD TYPE	DESCRIPTION	WELDER ID	DATE	NDE REPORT No.	V.T.
2	2"	SCH 80	BW					
1	2"	SCH 80	BW					

GENERAL NOTES:

1) ALL DIMENSIONS AND ELEVATIONS ARE IN IMPERIAL UNLESS OTHERWISE SPECIFIED.
2) REFER TO 5B1108-02-DR-80-000-1 FOR PIPE SUPPORT DRAWINGS.
3) SPOOL TO BE BUILT IN ACCORDANCE WITH ASME PRESSURE PIPING CODE B31.3, 2010 EDITION.
4) ALL FLANGE BOLT HOLES TO STRADDLE CENTER LINES (UNO).
5) THIS ISOMETRIC IS TO BE READ IN CONJUNCTION WITH DEVON NEC CORPORATION GS-5210 PIPING CLASS SPECIFICATIONS.
6) PIPING SPEC A13 IS TO SUPERCEDE A11 FOR ALL SMALL BORE VENTS, DRAINS AND INSTRUMENT CONNECTIONS AS PER 5BLUE RFI #4.
7) HYDRO TEST TO BE CHARTED FOR 1 HR.
8) 1/8" WELD GAP HAS BEEN TAKEN INTO ACCOUNT FOR ALL BW AND SW CONNECTIONS.
9) SHOP TO VERIFY ALL DIMENSIONS AND ELEVATIONS AND COORDINATES PRIOR TO FABRICATION.
10) JOINT NON-DESTRUCTIVE EXAMINATION:
ALL JOINT: 20% VISUAL, BW: 10% RT, SW: 5% RT(FIT-UP) + 10% MT, FILLET WELDS: 10% MT.

REV.	D/M/Y	DESCRIPTION	BY	CHK	APP
0	29/08/2013	ISSUED FOR CONSTRUCTION	RR	BB	

LEGEND:
- ○ : WELD NO.
- ⬭ : MARK NO.
- FFW ○ : FIELD FIT WELD
- ⊗ : FIELD WELD
- 4 : SPOOL NUMBER
- : PIPE SUPPORT

STD WELD PROC:	5B-102/103	PAINT SYSTEM:	SEE E&IL
L.T. WELD PROC:	5B-102/103	INSULATION:	NA
RATING/SPEC:	CL150/AL11	SANDBLAST:	SSPC-SP6
HYDROTEST PSIG:	428	DESIGN TEMP °F:	100
RADIOGRAPHY:	10%	DESIGN PRES PSIG:	285
STRESS RELIEVE:	NO		

5Blue Process Equipment Inc.

INTI DESIGNS

TITLE: DEVON NEC CORPORATION.
FERRIER CENTRAL PROCESSING FACILITY
CENTRAL OIL BATTERY - LIQUID EXTRACTION PLANT (LEP)
PIPING ISOMETRIC
LINE NO. 60-FG-AL11-20329

CLIENT DOCUMENT NUMBER	ISOMETRIC NUMBER	REV.
TBD	5B1108-02-DR-80-008-1	0

THIS IS THE EXCLUSIVE PROPERTY OF INTI DESIGNS AND MAY NOT BE COPIED OR COMMUNICATED TO A THIRD PARTY WITHOUT THE WRITTEN AUTHORIZATION OF INTI DESIGNS.

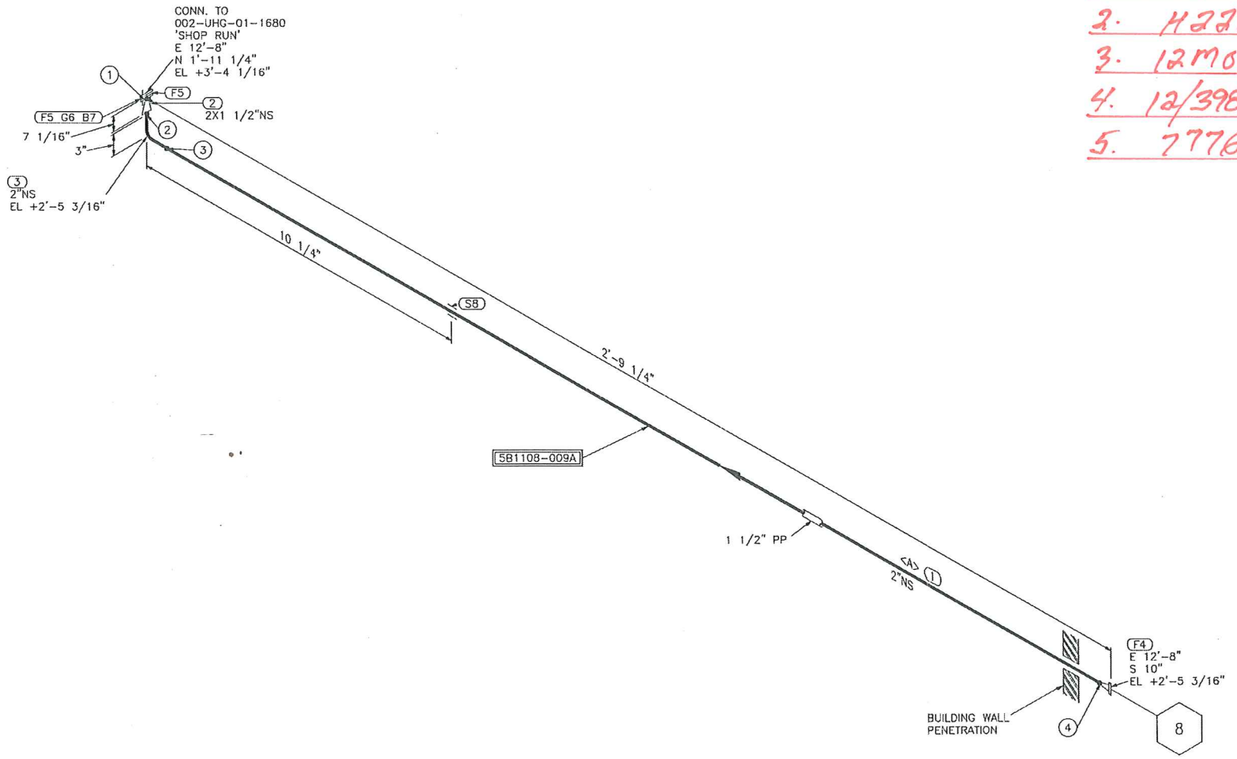

1. 511773
2. H2231
3. 12M01011
4. 12/39812
5. 77767

BILL OF MATERIAL

MARK	SIZE (INCH)	DESCRIPTION	QTY	WEIGHT (LBS)
		SHOP MATERIALS		
		PIPE		
1	2	PIPE, SCH 80, ASTM A333 GR6, SMLS, B36.10	2.2'	11.0
		FITTINGS		
2	2X1 1/2	CONC SWAGE, SCH 80, ASTM A420 WPL6, SMLS, MSS SP-95 BLE-PSE	1	2.0
3	2	90 DEG LR ELBOW, SCH 80, ASTM A420 WPL6, B16.9	1	2.2
		FLANGES		
4	2	FLANGE, CL300, SCH 80, RFWN, ASTM A350 LF2 CL1, B16.5	1	9.0
5	1 1/2	FLANGE, CL300, SCH 80, RFSW, ASTM A350 LF2 CL1, B16.5	2	12.0
		GASKETS		
6	1 1/2	GASKET, CL300, RF, 1/8" THK, 316 SS SPIRAL WOUND, FLEX FILLER CGI, CS CENTERING RING, 316 SS INNER RING, B16.20	1	1.0
		BOLTS		
7	3/4X3 3/4	(4) STUDBOLT c/w 2 HEX NUTS, ASTM A193 GR B7M, A194 GR 2HM, B16.5	1	1.0
		SUPPORTS		
8	2	SB-2-A-2" & SG-5 & SA-6	1	13.5
		PIPE SPOOLS		
		5B1108-009A		

CUT PIPE LENGTH

PIECE NO	LENGTH (FT-INS)	N.S. (INS)	REMARKS	END ONE	END TWO	ITEM CODE
<A>	2'3 1/4"	2		BEVEL	BEVEL	7

AS BUILT

4	2"	SCH 80	BW					
3	2"	SCH 80	BW					
2	2"	SCH 80	BW					
1	1 1/2"	SCH 80	SW					
WELD NO.	SIZE	NOM. THK	WELD TYPE	DESCRIPTION	WELDER ID	DATE	NDE REPORT No.	V.T.

TOTAL SHOP WEIGHT 51.6
TOTAL FIELD WEIGHT 0.0
TOTAL WEIGHT-THIS DWG 51.6

GENERAL NOTES:

1) ALL DIMENSIONS AND ELEVATIONS ARE IN IMPERIAL UNLESS OTHERWISE SPECIFIED.
2) REFER TO 5B1108-02-DR-80-000-1 FOR PIPE SUPPORT DRAWINGS.
3) SPOOL TO BE BUILT IN ACCORDANCE WITH ASME PRESSURE PIPING CODE B31.3, 2010 EDITION.
4) ALL FLANGE BOLT HOLES TO STRADDLE CENTER LINES (UNO).
5) THIS ISOMETRIC IS TO BE READ IN CONJUNCTION WITH DEVON NEC CORPORATION GS-5210 PIPING CLASS SPECIFICATIONS.
6) PIPING SPEC A13 IS TO SUPERCEDE A11 FOR ALL SMALL BORE VENTS, DRAINS AND INSTRUMENT CONNECTIONS AS PER 5BLUE RFI #4.
7) HYDRO TEST TO BE CHARTED FOR 1 HR.
8) 1/8" WELD CAP HAS BEEN TAKEN INTO ACCOUNT FOR ALL BW AND SW CONNECTIONS.
9) SHOP TO VERIFY ALL DIMENSIONS AND ELEVATIONS AND COORDINATES PRIOR TO FABRICATION.
10) JOINT NON-DESTRUCTIVE EXAMINATION:
ALL JOINT: 20% VISUAL, BW: 10% RT, SW: 5% RT(FIT-UP) + 10% MT, FILLET WELDS: 10% MT.

REV.	D/M/Y	DESCRIPTION	BY	CHK	APP
0	29/08/2013	ISSUED FOR CONSTRUCTION	RR	BB	

LEGEND:
- ○ : WELD NO.
- ⬭ : MARK NO.
- FFW ○ : FIELD FIT WELD
- ✕ : FIELD WELD
- 4 : SPOOL NUMBER
- : PIPE SUPPORT

STD WELD PROC:	5B-102/103	PAINT SYSTEM:	SEE E&IL
L.T. WELD PROC:	5B-102/103	INSULATION:	1 1/2" PP
RATING/SPEC:	CL150/A11a	SANDBLAST:	SSPC-SP6
HYDROTEST PSIG:	428	DESIGN TEMP °F:	100
RADIOGRAPHY:	10%	DESIGN PRES PSIG:	285
STRESS RELIEVE:	NO		

5Blue Process Equipment Inc.

INTI DESIGNS

TITLE: DEVON NEC CORPORATION.
FERRIER CENTRAL PROCESSING FACILITY
CENTRAL OIL BATTERY - LIQUID EXTRACTION PLANT (LEP)
PIPING ISOMETRIC
LINE NO. 60-UHMS-A11a-21368

CLIENT DOCUMENT NUMBER	ISOMETRIC NUMBER	REV.
TBD	5B1108-02-DR-80-009-1	0

THIS IS THE EXCLUSIVE PROPERTY OF INTI DESIGNS AND MAY NOT BE COPIED OR COMMUNICATED TO A THIRD PARTY WITHOUT THE WRITTEN AUTHORIZATION OF INTI DESIGNS.

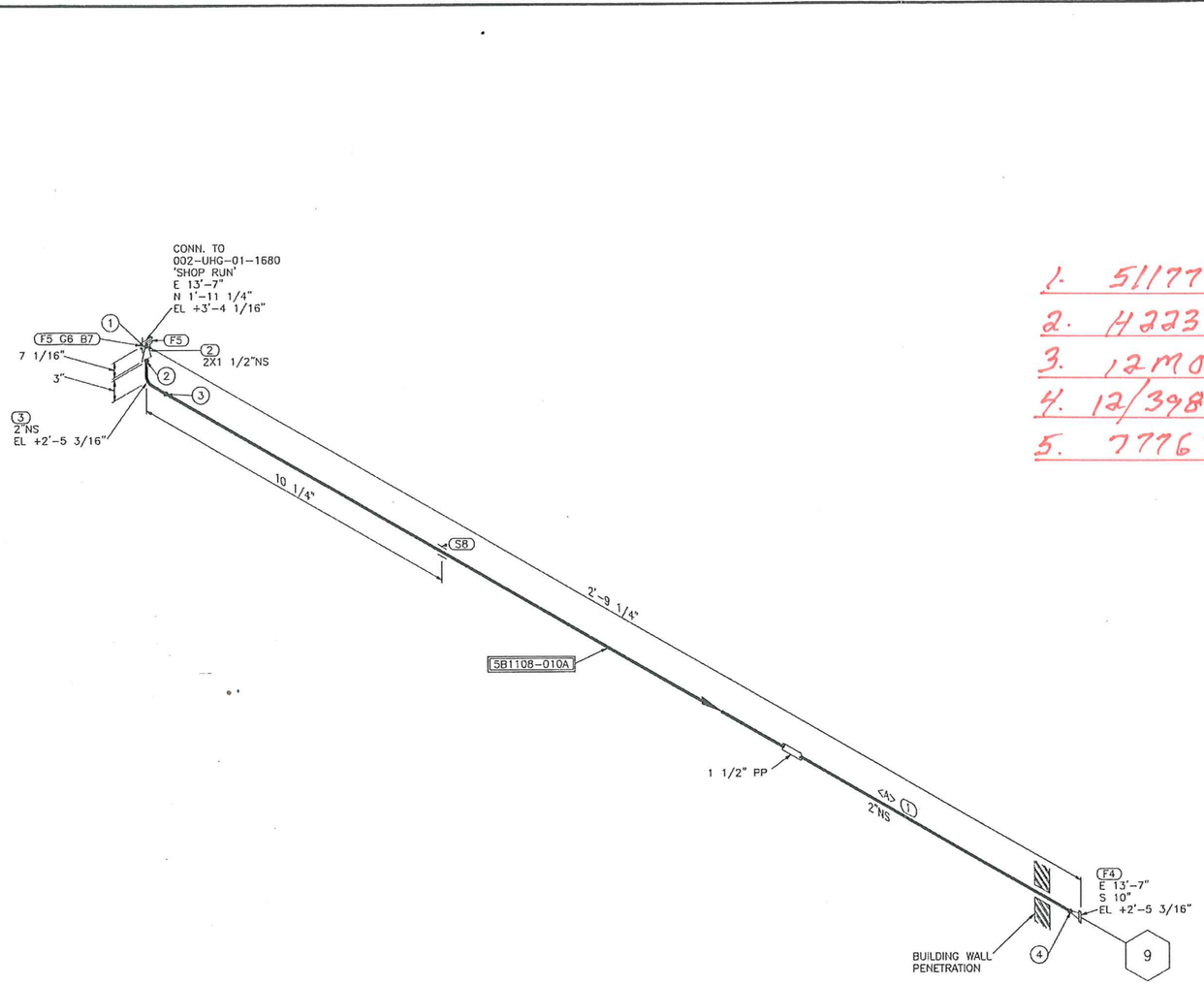

1. 511773
2. 42231
3. 12M01011
4. 12/39812
5. 77767

BILL OF MATERIAL

MARK	SIZE (INCH)	DESCRIPTION	QTY	WEIGHT (LBS)
		SHOP MATERIALS		
		PIPE		
1	2	PIPE, SCH 80, ASTM A333 GR6, SMLS, B36.10	2.2'	11.0
		FITTINGS		
2	2X1 1/2	CONC SWAGE, SCH 80, ASTM A420 WPL6, SMLS, MSS SP-95 BLE-PSE	1	2.0
3	2	90 DEG LR ELBOW, SCH 80, ASTM A420 WPL6, B16.9	1	2.2
		FLANGES		
4	2	FLANGE, CL300, SCH 80, RFWN, ASTM A350 LF2 CL1, B16.5	1	9.0
5	1 1/2	FLANGE, CL300, SCH 80, RFSW, ASTM A350 LF2 CL1, B16.5	2	12.0
		GASKETS		
6	1 1/2	GASKET, CL300, RF, 1/8" THK, 316 SS SPIRAL WOUND, FLEX FILLER CGI, CS CENTERING RING, 316 SS INNER RING, B16.20	1	1.0
		BOLTS		
7	3/4X3 3/4	(4) STUDBOLT c/w 2 HEX NUTS, ASTM A193 GR B7M, A194 GR 2HM, B16.5	1	1.0
		SUPPORTS		
8	2	S8-2-A-2" & SG-5 & SA-6	1	13.5
		PIPE SPOOLS		
		5B1108-010A		

CUT PIPE LENGTH

PIECE NO	LENGTH (FT-INS)	N.S. (INS)	REMARKS	END ONE	END TWO	ITEM CODE
<A>	2'3 1/4"	2		BEVEL	BEVEL	8

AS BUILT

TOTAL SHOP WEIGHT 51.6
TOTAL FIELD WEIGHT 0.0
TOTAL WEIGHT-THIS DWG 51.6

WELD NO.	SIZE	NOM. THK	WELD TYPE	DESCRIPTION	WELDER ID	DATE	NDE REPORT No.	V.T.
4	2"	SCH 80	BW					
3	2"	SCH 80	BW					
2	2"	SCH 80	BW					
1	1 1/2"	SCH 80	SW					

GENERAL NOTES:

1) ALL DIMENSIONS AND ELEVATIONS ARE IN IMPERIAL UNLESS OTHERWISE SPECIFIED.
2) REFER TO 5B1108-02-DR-80-000-1 FOR PIPE SUPPORT DRAWINGS.
3) SPOOL TO BE BUILT IN ACCORDANCE WITH ASME PRESSURE PIPING CODE B31.3, 2010 EDITION.
4) ALL FLANGE BOLT HOLES TO STRADDLE CENTER LINES (UNO).
5) THIS ISOMETRIC IS TO BE READ IN CONJUNCTION WITH DEVON NEC CORPORATION GS-5210 PIPING CLASS SPECIFICATIONS.
6) PIPING SPEC A13 IS TO SUPERCEDE A11 FOR ALL SMALL BORE VENTS, DRAINS AND INSTRUMENT CONNECTIONS AS PER 5BLUE RFI #4.
7) HYDRO TEST TO BE CHARTED FOR 1 HR.
8) 1/8" WELD GAP HAS BEEN TAKEN INTO ACCOUNT FOR ALL BW AND SW CONNECTIONS.
9) SHOP TO VERIFY ALL DIMENSIONS AND ELEVATIONS AND COORDINATES PRIOR TO FABRICATION.
10) JOINT NON-DESTRUCTIVE EXAMINATION:
ALL JOINT: 20% VISUAL, BW: 10% RT, SW: 5% RT(FIT-UP) + 10% MT, FILLET WELDS: 10% MT.

REV.	D/M/Y	DESCRIPTION	BY	CHK	APP
0	29/08/2013	ISSUED FOR CONSTRUCTION	RR	BB	

LEGEND:
- ○ : WELD NO.
- ⬭ : MARK NO.
- FFW ○ : FIELD FIT WELD
- ⊗ : FIELD WELD
- 4 : SPOOL NUMBER
- — : PIPE SUPPORT

STD WELD PROC:	5B-102/103	PAINT SYSTEM:	SEE E&IL
L.T. WELD PROC:	5B-102/103	INSULATION:	1 1/2" PP
RATING/SPEC:	CL150/A11a	SANDBLAST:	SSPC-SP6
HYDROTEST PSIG:	428	DESIGN TEMP °F:	100
RADIOGRAPHY:	10%	DESIGN PRES PSIG:	285
STRESS RELIEVE:	NO		

5Blue Process Equipment Inc.

INTI DESIGNS

TITLE: DEVON NEC CORPORATION.
FERRIER CENTRAL PROCESSING FACILITY
CENTRAL OIL BATTERY - LIQUID EXTRACTION PLANT (LEP)
PIPING ISOMETRIC
LINE NO. 60-UMHR-A11a-21382

CLIENT DOCUMENT NUMBER	ISOMETRIC NUMBER	REV.
TBD	5B1108-02-DR-80-010-1	0

THIS IS THE EXCLUSIVE PROPERTY OF INTI DESIGNS AND MAY NOT BE COPIED OR COMMUNICATED TO A THIRD PARTY WITHOUT THE WRITTEN AUTHORIZATION OF INTI DESIGNS.

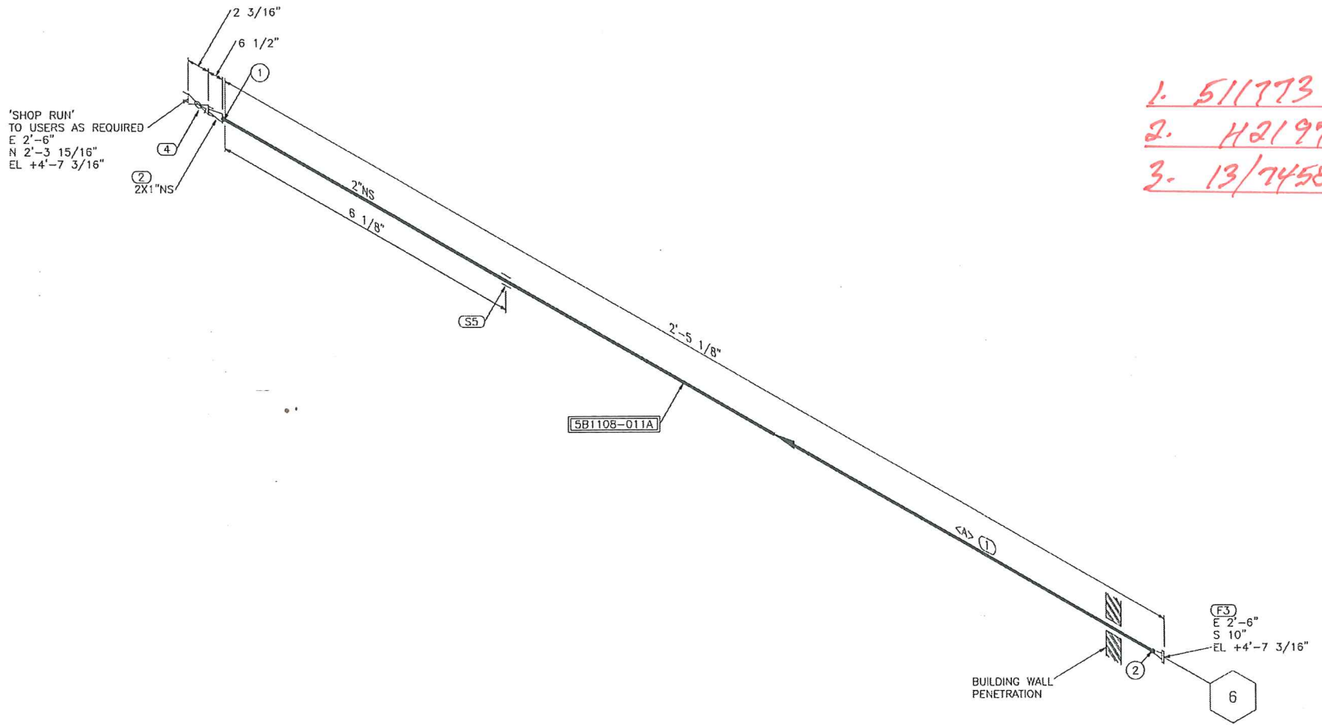

1. 511773
2. H2197
3. 13/74582

BILL OF MATERIAL

MARK	SIZE (INCH)	DESCRIPTION	QTY	WEIGHT (LBS)
		SHOP MATERIALS		
		PIPE		
1	2	PIPE, SCH 80, ASTM A333 GR6, SMLS, B36.10	2.3'	11.1
		FITTINGS		
2	2X1	CONC SWAGE, SCH 80x160, ASTM A420 WPL6, SMLS, MSS SP-95 BLE-TSE	1	2.0
		FLANGES		
3	2	FLANGE, CL150, SCH 80, RFWN, ASTM A350 LF2 CL1, B16.5	1	6.0
		VALVES / IN-LINE ITEMS		
4	1	BALL VALVE, CL800, THRD, LEVER OP, (BA8202A)	1	1.4
		SUPPORTS		
5	2	GU-2" & SA-4	1	0.2
		PIPE SPOOLS		
		5B1108-011A		

CUT PIPE LENGTH

PIECE NO	LENGTH (FT-INS)	N.S. (INS)	REMARKS	END ONE	END TWO	ITEM CODE
<A>	2'2 1/2"	2		BEVEL	BEVEL	5

AS BUILT

TOTAL SHOP WEIGHT 20.6
TOTAL FIELD WEIGHT 0.0
TOTAL WEIGHT-THIS DWG 20.6

GENERAL NOTES:

1) ALL DIMENSIONS AND ELEVATIONS ARE IN IMPERIAL UNLESS OTHERWISE SPECIFIED.
2) REFER TO 5B1108-02-DR-80-000-1 FOR PIPE SUPPORT DRAWINGS.
3) SPOOL TO BE BUILT IN ACCORDANCE WITH ASME PRESSURE PIPING CODE B31.3, 2010 EDITION.
4) ALL FLANGE BOLT HOLES TO STRADDLE CENTER LINES (UNO).
5) THIS ISOMETRIC IS TO BE READ IN CONJUNCTION WITH DEVON NEC CORPORATION GS-5210 PIPING CLASS SPECIFICATIONS.
6) PIPING SPEC A13 IS TO SUPERCEDE A11 FOR ALL SMALL BORE VENTS, DRAINS AND INSTRUMENT CONNECTIONS AS PER 5BLUE RFI #4.
7) HYDRO TEST TO BE CHARTED FOR 1 HR.
8) 1/8" WELD GAP HAS BEEN TAKEN INTO ACCOUNT FOR ALL BW AND SW CONNECTIONS.
9) SHOP TO VERIFY ALL DIMENSIONS AND ELEVATIONS AND COORDINATES PRIOR TO FABRICATION.
10) JOINT NON-DESTRUCTIVE EXAMINATION:
ALL JOINT: 20% VISUAL, BW: 10% RT, SW: 5% RT(FIT-UP) + 10% MT, FILLET WELDS: 10% MT.

WELD NO.	SIZE	NOM. THK	WELD TYPE	DESCRIPTION	WELDER ID	DATE	NDE REPORT No.	V.T.
2	2"	SCH 80	BW					
1	2"	SCH 80	BW					

REV.	D/M/Y	DESCRIPTION	BY	CHK	APP
0	29/08/2013	ISSUED FOR CONSTRUCTION	RR	BB	

LEGEND:
○ : WELD NO.
⬭ : MARK NO.
FFW ○ : FIELD FIT WELD
⋈ : FIELD WELD
4 : SPOOL NUMBER
— : PIPE SUPPORT

STD WELD PROC:	5B-102/103	PAINT SYSTEM:	SEE E&IL
L.T. WELD PROC:	5B-102/103	INSULATION:	NA
RATING/SPEC:	CL150/AU11	SANDBLAST:	SSPC-SP6
HYDROTEST PSIG:	428	DESIGN TEMP 'F:	100
RADIOGRAPHY:	10%	DESIGN PRES PSIG:	285
STRESS RELIEVE:	NO		

5Blue Process Equipment Inc.

INTI DESIGNS

TITLE:
DEVON NEC CORPORATION.
FERRIER CENTRAL PROCESSING FACILITY
CENTRAL OIL BATTERY – LIQUID EXTRACTION PLANT (LEP)
PIPING ISOMETRIC
LINE NO. 60-UA-AU11-22305

CLIENT DOCUMENT NUMBER	ISOMETRIC NUMBER	REV.
TBD	5B1108-02-DR-80-011-1	0

THIS IS THE EXCLUSIVE PROPERTY OF INTI DESIGNS AND MAY NOT BE COPIED OR COMMUNICATED TO A THIRD PARTY WITHOUT THE WRITTEN AUTHORIZATION OF INTI DESIGNS.

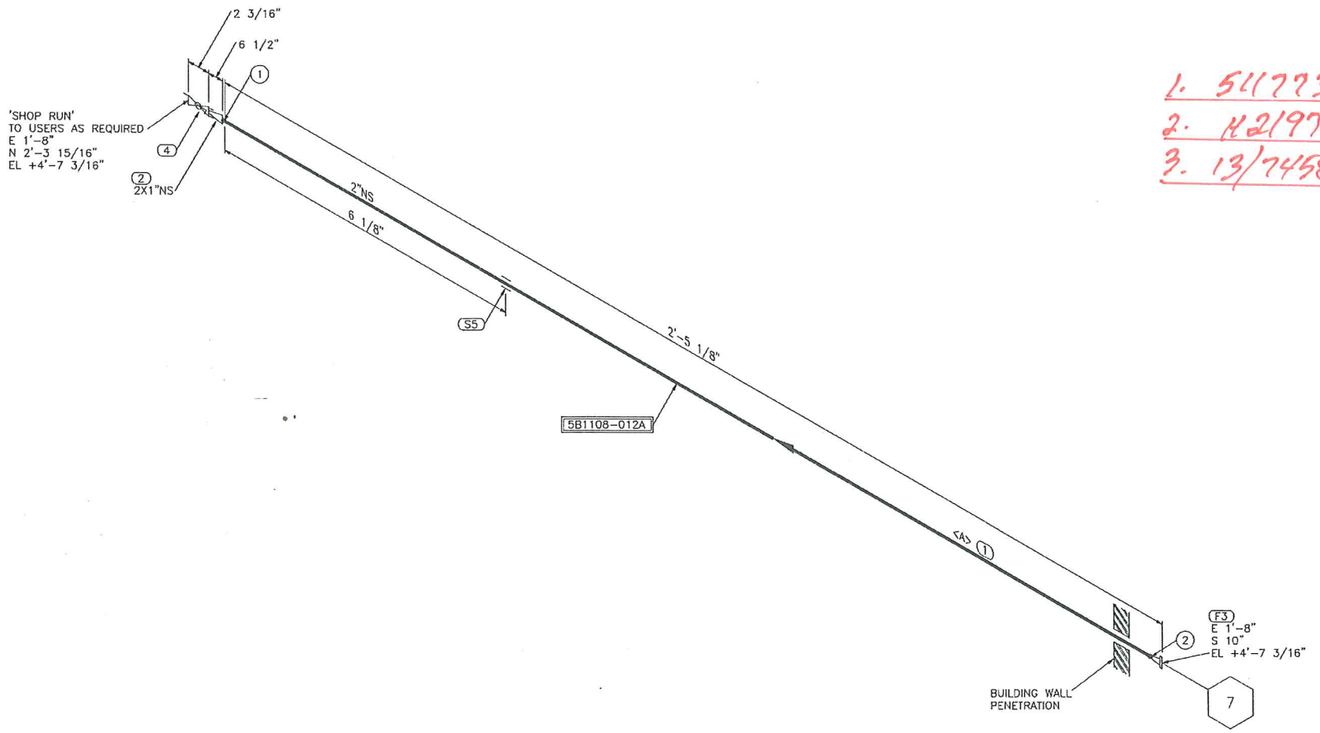

1. 511773
2. 42197
3. 13/74592

BILL OF MATERIAL

MARK	SIZE (INCH)	DESCRIPTION	QTY	WEIGHT (LBS)
		SHOP MATERIALS		
		PIPE		
1	2	PIPE, SCH 80, ASTM A333 GR6, SMLS, B36.10	2.3'	11.1
		FITTINGS		
2	2X1	CONC SWAGE, SCH 80x160, ASTM A420 WPL6, SMLS, MSS SP-95 BLE-TSE	1	2.0
		FLANGES		
3	2	FLANGE, CL150, SCH 80, RFWN, ASTM A350 LF2 CL1, B16.5	1	6.0
		VALVES / IN-LINE ITEMS		
4	1	BALL VALVE, CL800, THRD, LEVER OP, (BA8202A)	1	1.4
		SUPPORTS		
5	2	GU-2" & SA-4	1	0.2
		PIPE SPOOLS		
		5B1108-012A		

CUT PIPE LENGTH

PIECE NO	LENGTH (FT-INS)	N.S. (INS)	REMARKS	END ONE	END TWO	ITEM CODE
<A>	2'2 1/2"	2		BEVEL	BEVEL	5

AS BUILT

TOTAL SHOP WEIGHT 20.6
TOTAL FIELD WEIGHT 0.0
TOTAL WEIGHT-THIS DWG 20.6

WELD NO.	SIZE	NOM. THK	WELD TYPE	DESCRIPTION	WELDER ID	DATE	NDE REPORT No.	V.T.
2	2"	SCH 80	BW					
1	2"	SCH 80	BW					

GENERAL NOTES:

1) ALL DIMENSIONS AND ELEVATIONS ARE IN IMPERIAL UNLESS OTHERWISE SPECIFIED.
2) REFER TO 5B1108-02-DR-80-000-1 FOR PIPE SUPPORT DRAWINGS.
3) SPOOL TO BE BUILT IN ACCORDANCE WITH ASME PRESSURE PIPING CODE B31.3, 2010 EDITION.
4) ALL FLANGE BOLT HOLES TO STRADDLE CENTER LINES (UNO).
5) THIS ISOMETRIC IS TO BE READ IN CONJUNCTION WITH DEVON NEC CORPORATION GS-5210 PIPING CLASS SPECIFICATIONS.
6) PIPING SPEC A13 IS TO SUPERCEDE A11 FOR ALL SMALL BORE VENTS, DRAINS AND INSTRUMENT CONNECTIONS AS PER 5BLUE RFI #4.
7) HYDRO TEST TO BE CHARTED FOR 1 HR.
8) 1/8" WELD GAP HAS BEEN TAKEN INTO ACCOUNT FOR ALL BW AND SW CONNECTIONS.
9) SHOP TO VERIFY ALL DIMENSIONS AND ELEVATIONS AND COORDINATES PRIOR TO FABRICATION.
10) JOINT NON-DESTRUCTIVE EXAMINATION:
ALL JOINT: 20% VISUAL, BW: 10% RT, SW: 5% RT(FIT-UP) + 10% MT, FILLET WELDS: 10% MT.

REV.	D/M/Y	DESCRIPTION	BY	CHK	APP
0	29/08/2013	ISSUED FOR CONSTRUCTION	RR	BB	

LEGEND:
○ : WELD NO.
⬭ : MARK NO.
FFW ○ : FIELD FIT WELD
⋈ : FIELD WELD
4 : SPOOL NUMBER
: PIPE SUPPORT

STD WELD PROC:	5B-102/103	PAINT SYSTEM:	SEE E&IL
L.T. WELD PROC:	5B-102/103	INSULATION:	NA
RATING/SPEC:	CL150/AU11	SANDBLAST:	SSPC-SP6
HYDROTEST PSIG:	428	DESIGN TEMP °F:	100
RADIOGRAPHY:	10%	DESIGN PRES PSIG:	285
STRESS RELIEVE:	NO		

5Blue Process Equipment Inc.

INTI DESIGNS

TITLE: DEVON NEC CORPORATION.
FERRIER CENTRAL PROCESSING FACILITY
CENTRAL OIL BATTERY – LIQUID EXTRACTION PLANT (LEP)
PIPING ISOMETRIC
LINE NO. 60-IA-AU11-22307

CLIENT DOCUMENT NUMBER	ISOMETRIC NUMBER	REV.
TBD	5B1108-02-DR-80-012-1	0

THIS IS THE EXCLUSIVE PROPERTY OF INTI DESIGNS AND MAY NOT BE COPIED OR COMMUNICATED TO A THIRD PARTY WITHOUT THE WRITTEN AUTHORIZATION OF INTI DESIGNS.

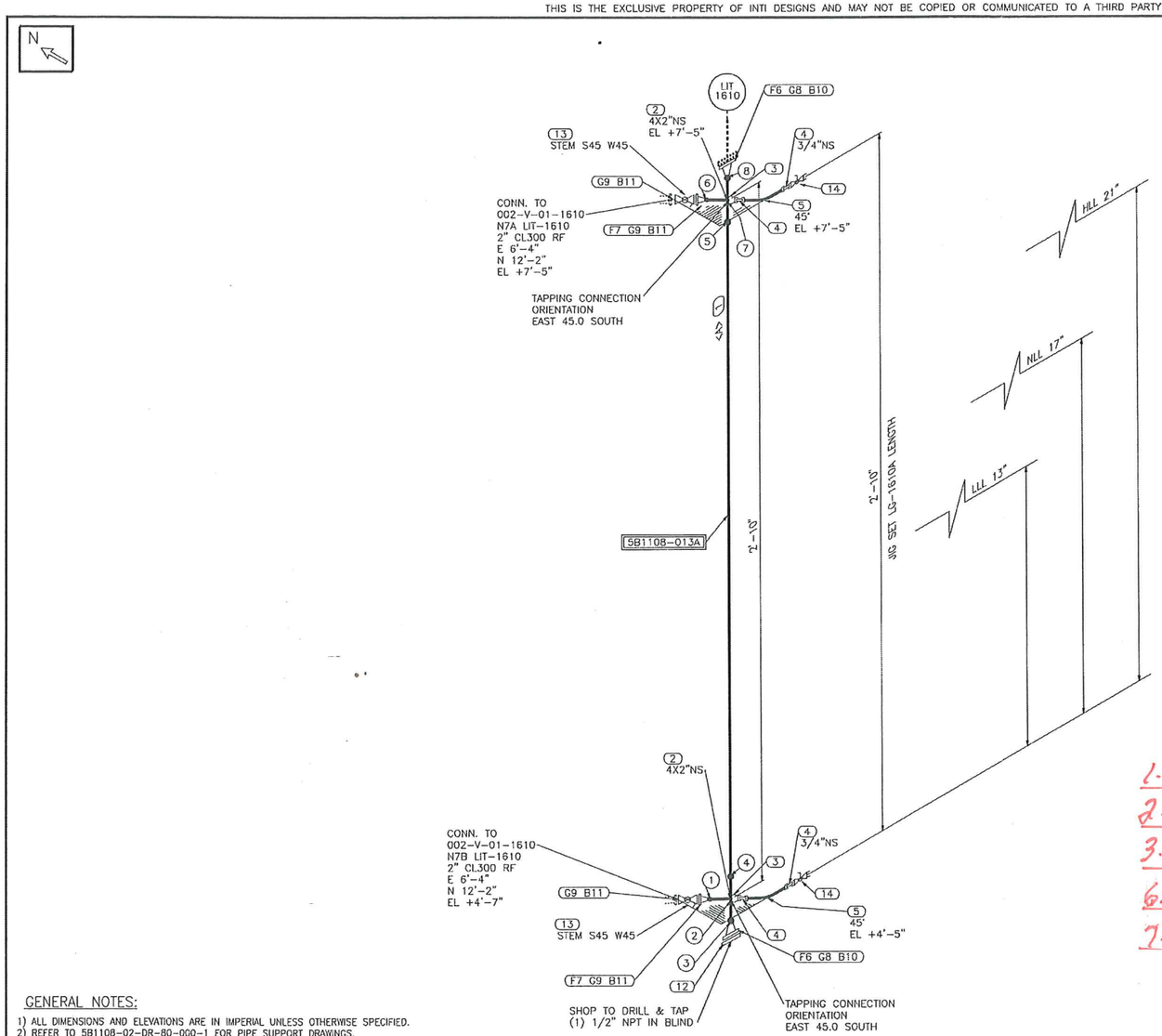

BILL OF MATERIAL

MARK	SIZE (INCH)	DESCRIPTION	QTY	WEIGHT (LBS)
		SHOP MATERIALS		
		PIPE		
1	4	PIPE, SCH STD, ASTM A106B, SMLS, B36.10	2.2'	23.0
		FITTINGS		
2	4X2	RED TEE, SCH STDx80, ASTM A234 WPB, B16.9	2	29.0
3	3/4	THREADOLET, CL3000, ASTM A105N, MSS SP-97	2	0.7
4	3/4	NIPPLE, SCH 160, ASTM A106B, SMLS, B36.10 TBE (4.0000 LG)	4	7.8
5	3/4	45 DEG LR ELBOW, CL3000, THRD, ASTM A105N, B16.11	2	2.4
		FLANGES		
6	4	FLANGE, CL300, SCH STD, RFWN, ASTM A105N, B16.5	2	50.0
7	2	FLANGE, CL300, SCH 80, RFWN, ASTM A105N, B16.5	2	18.0
		GASKETS		
8	4	GASKET, CL300, RF, 1/8" THK, 316 SS SPIRAL WOUND, FLEX FILLER CGI, CS CENTERING RING, 316 SS INNER RING, B16.20	2	2.0
9	2	GASKET, CL300, RF, 1/8" THK, 316 SS SPIRAL WOUND, FLEX FILLER CGI, CS CENTERING RING, 316 SS INNER RING, B16.20	4	4.0
		BOLTS		
10	3/4X4 1/2	(8) STUDBOLT c/w 2 HEX NUTS, ASTM A193 GR B7, A194 GR 2H, B16.5	2	2.0
11	5/8X3 1/2	(8) STUDBOLT c/w 2 HEX NUTS, ASTM A193 GR B7, A194 GR 2H, B16.5	4	4.0
		VALVES / IN-LINE ITEMS		
12	4	HUB BLIND FLANGE, CL300, RF, ASTM A105N, B16.5 (c/w 1/2" DRILL & TAP)	1	27.0
13	2	BALL VALVE, CL300, RF, LEVER OP, (BV0306A)	2	76.0
14	3/4	BALL VALVE, CL800, THRD, LEVER OP, (BAB202A)	2	1.6
		PIPE SPOOLS		
		5B1108-013A		

CUT PIPE LENGTH

PIECE NO	LENGTH (FT-INS)	N.S. (INS)	REMARKS	END ONE	END TWO	ITEM CODE
<A>	2'1 1/2"	4		BEVEL	BEVEL	21

1. W21103747
2. CE321
3. 58880, 58B4B
6. 12/34034
7. 53172

AS BUILT

TOTAL SHOP WEIGHT 247.3
TOTAL FIELD WEIGHT 27.0
TOTAL WEIGHT-THIS DWG 274.3

WELD NO.	SIZE	NOM. THK	WELD TYPE	DESCRIPTION	WELDER ID	DATE	NDE REPORT No.	V.T.
8	4"	SCH STD	BW					
7	3/4"	CL3000	LET					
6	2"	SCH 80	BW					
5	4"	SCH STD	BW					
4	4"	SCH STD	BW					
3	4"	SCH STD	BW					
2	3/4"	CL3000	LET					
1	2"	SCH 80	BW					

GENERAL NOTES:

1) ALL DIMENSIONS AND ELEVATIONS ARE IN IMPERIAL UNLESS OTHERWISE SPECIFIED.
2) REFER TO 5B1108-02-DR-80-000-1 FOR PIPE SUPPORT DRAWINGS.
3) SPOOL TO BE BUILT IN ACCORDANCE WITH ASME PRESSURE PIPING CODE B31.3, 2010 EDITION.
4) ALL FLANGE BOLT HOLES TO STRADDLE CENTER LINES (UNO).
5) THIS ISOMETRIC IS TO BE READ IN CONJUNCTION WITH DEVON NEC CORPORATION GS-5210 PIPING CLASS SPECIFICATIONS.
6) PIPING SPEC A13 IS TO SUPERCEDE A11 FOR ALL SMALL BORE VENTS, DRAINS AND INSTRUMENT CONNECTIONS AS PER 5BLUE RFI #4.
7) HYDRO TEST TO BE CHARTED FOR 1 HR.
8) 1/8" WELD GAP HAS BEEN TAKEN INTO ACCOUNT FOR ALL BW AND SW CONNECTIONS.
9) SHOP TO VERIFY ALL DIMENSIONS AND ELEVATIONS AND COORDINATES PRIOR TO FABRICATION.
10) JOINT NON-DESTRUCTIVE EXAMINATION:
ALL JOINT: 20% VISUAL, BW: 10% RT, SW: 5% RT(FIT-UP) + 10% MT, FILLET WELDS: 10% MT.

REV.	D/M/Y	DESCRIPTION	BY	CHK	APP
0	23/08/2013	ISSUED FOR CONSTRUCTION	RR	BB	

LEGEND:
- ○ : WELD NO.
- ⬭ : MARK NO.
- FFW ○ : FIELD FIT WELD
- ⊗ : FIELD WELD
- [4] : SPOOL NUMBER
- ⥤ : PIPE SUPPORT

STD WELD PROC:	5B-102/103	PAINT SYSTEM:	SEE E&IL
L.T. WELD PROC:	5B-102/103	INSULATION:	NA
RATING/SPEC:	CL150/A11	SANDBLAST:	SSPC-SP6
HYDROTEST PSIG:	428	DESIGN TEMP °F:	100
RADIOGRAPHY:	10%	DESIGN PRES PSIG:	285
STRESS RELIEVE:	NO		

5Blue Process Equipment Inc.

INTI DESIGNS

TITLE: DEVON NEC CORPORATION.
FERRIER CENTRAL PROCESSING FACILITY
CENTRAL OIL BATTERY - LIQUID EXTRACTION PLANT (LEP)
PIPING ISOMETRIC
LINE NO. 002-V-01-1610-LB-1610

CLIENT DOCUMENT NUMBER	ISOMETRIC NUMBER	REV.
TBD	5B1108-02-DR-80-013-1	0

THIS IS THE EXCLUSIVE PROPERTY OF INTI DESIGNS AND MAY NOT BE COPIED OR COMMUNICATED TO A THIRD PARTY WITHOUT THE WRITTEN AUTHORIZATION OF INTI DESIGNS.

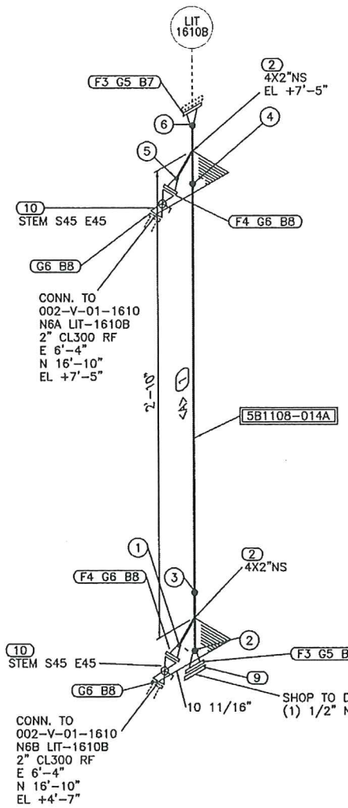

1. 420958
2. BV069
3. 12/34021
4. 531T2

BILL OF MATERIAL

MARK	SIZE (INCH)	DESCRIPTION	QTY	WEIGHT (LBS)
		SHOP MATERIALS		
		PIPE		
1	4	PIPE, SCH STD, ASTM A106B, SMLS, B36.10	2.2'	23.0
		FITTINGS		
2	4X2	RED TEE, SCH STDx80, ASTM A234 WPB, B16.9	2	29.0
		FLANGES		
3	4	FLANGE, CL300, SCH STD, RFWN, ASTM A105N, B16.5	2	50.0
4	2	FLANGE, CL300, SCH 80, RFWN, ASTM A105N, B16.5	2	18.0
		GASKETS		
5	4	GASKET, CL300, RF, 1/8" THK, 316 SS SPIRAL WOUND, FLEX FILLER CGI, CS CENTERING RING, 316 SS INNER RING, B16.20	2	2.0
6	2	GASKET, CL300, RF, 1/8" THK, 316 SS SPIRAL WOUND, FLEX FILLER CGI, CS CENTERING RING, 316 SS INNER RING, B16.20	4	4.0
		BOLTS		
7	3/4X4 1/2	(8) STUDBOLT c/w 2 HEX NUTS, ASTM A193 GR B7, A194 GR 2H, B16.5	2	2.0
8	5/8X3 1/2	(8) STUDBOLT c/w 2 HEX NUTS, ASTM A193 GR B7, A194 GR 2H, B16.5	4	4.0
		VALVES / IN-LINE ITEMS		
9	4	HUB BLIND FLANGE, CL300, RF, ASTM A105N, B16.5 (c/w 1/2" DRILL & TAP)	1	27.0
10	2	BALL VALVE, CL300, RF, LEVER OP, (BV0306A)	2	76.0
		PIPE SPOOLS		
		5B1108-014A		

CUT PIPE LENGTH

PIECE NO	LENGTH (FT-INS)	N.S. (INS)	REMARKS	END ONE	END TWO	ITEM CODE
<A>	2'1 1/2"	4		BEVEL	BEVEL	23

AS BUILT

TOTAL SHOP WEIGHT 234.9
TOTAL FIELD WEIGHT 27.0
TOTAL WEIGHT-THIS DWG 261.9

GENERAL NOTES:

1) ALL DIMENSIONS AND ELEVATIONS ARE IN IMPERIAL UNLESS OTHERWISE SPECIFIED.
2) REFER TO 5B1108-02-DR-80-000-1 FOR PIPE SUPPORT DRAWINGS.
3) SPOOL TO BE BUILT IN ACCORDANCE WITH ASME PRESSURE PIPING CODE B31.3, 2010 EDITION.
4) ALL FLANGE BOLT HOLES TO STRADDLE CENTER LINES (UNO).
5) THIS ISOMETRIC IS TO BE READ IN CONJUNCTION WITH DEVON NEC CORPORATION GS-5210 PIPING CLASS SPECIFICATIONS.
6) PIPING SPEC A13 IS TO SUPERCEDE A11 FOR ALL SMALL BORE VENTS, DRAINS AND INSTRUMENT CONNECTIONS AS PER 5BLUE RFI #4.
7) HYDRO TEST TO BE CHARTED FOR 1 HR.
8) 1/8" WELD GAP HAS BEEN TAKEN INTO ACCOUNT FOR ALL BW AND SW CONNECTIONS.
9) SHOP TO VERIFY ALL DIMENSIONS AND ELEVATIONS AND COORDINATES PRIOR TO FABRICATION.
10) JOINT NON-DESTRUCTIVE EXAMINATION:
ALL JOINT: 20% VISUAL, BW: 10% RT, SW: 5% RT(FIT-UP) + 10% MT, FILLET WELDS: 10% MT.

WELD NO.	SIZE	NOM. THK	WELD TYPE	DESCRIPTION	WELDER ID	DATE	NDE REPORT No.	V.T.
6	4"	SCH STD	BW					
5	2"	SCH 80	BW					
4	4"	SCH STD	BW					
3	4"	SCH STD	BW					
2	4"	SCH STD	BW					
1	2"	SCH 80	BW					

REV.	D/M/Y	DESCRIPTION	BY	CHK	APP
0	23/08/2013	ISSUED FOR CONSTRUCTION	RR	BB	

LEGEND:
○ : WELD NO.
⬭ : MARK NO.
FFW ○ : FIELD FIT WELD
⋈ : FIELD WELD
4 : SPOOL NUMBER
: PIPE SUPPORT

STD WELD PROC:	5B-102/103	PAINT SYSTEM:	SEE E&IL
L.T. WELD PROC:	5B-102/103	INSULATION:	NA
RATING/SPEC:	CL150/A11	SANDBLAST:	SSPC-SP6
HYDROTEST PSIG:	428	DESIGN TEMP °F:	100
RADIOGRAPHY:	10%	DESIGN PRES PSIG:	285
STRESS RELIEVE:	NO		

5Blue Process Equipment Inc.

INTI DESIGNS

TITLE: DEVON NEC CORPORATION.
FERRIER CENTRAL PROCESSING FACILITY
CENTRAL OIL BATTERY – LIQUID EXTRACTION PLANT (LEP)
PIPING ISOMETRIC
LINE NO. 002-V-01-1610-LB-1610B

CLIENT DOCUMENT NUMBER	ISOMETRIC NUMBER	REV.
TBD	5B1108-02-DR-80-014-1	0

THIS IS THE EXCLUSIVE PROPERTY OF INTI DESIGNS AND MAY NOT BE COPIED OR COMMUNICATED TO A THIRD PARTY WITHOUT THE WRITTEN AUTHORIZATION OF INTI DESIGNS.

N

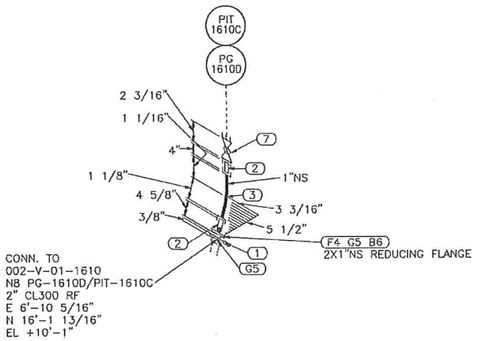

BILL OF MATERIAL

MARK	SIZE (INCH)	DESCRIPTION	QTY	WEIGHT (LBS)
		SHOP MATERIALS		
		FITTINGS		
1	2	SPEC BLIND, CL300, RF, ASTM A516 GR 70N, B16.48	1	3.0
2	1	NIPPLE, SCH 160, ASTM A106B, SMLS, B36.10 TBE (4.0000 LG)	2	5.7
3	1	90 DEG LR ELBOW, CL3000, THRD, ASTM A105N, B16.11	1	2.3
		FLANGES		
4	2X1	FLANGE, RED, CL300, RFTHRD, ASTM A105N, B16.5	1	7.0
		GASKETS		
5	2	GASKET, CL300, RF, 1/8" THK, 316 SS SPIRAL WOUND, FLEX FILLER CGI, CS CENTERING RING, 316 SS INNER RING, B16.20	2	2.0
		BOLTS		
6	5/8X4	(8) STUDBOLT c/w 2 HEX NUTS, ASTM A193 GR B7, A194 GR 2H, B16.5	1	1.0
		VALVES / IN-LINE ITEMS		
7	1	BALL VALVE, CL800, THRD, LEVER OP, (BA8202A)	1	1.4

AS BUILT

TOTAL SHOP WEIGHT 22.4
TOTAL FIELD WEIGHT 0.0
TOTAL WEIGHT-THIS DWG 22.4

GENERAL NOTES:

1) ALL DIMENSIONS AND ELEVATIONS ARE IN IMPERIAL UNLESS OTHERWISE SPECIFIED.
2) REFER TO 5B1108-02-DR-80-000-1 FOR PIPE SUPPORT DRAWINGS.
3) SPOOL TO BE BUILT IN ACCORDANCE WITH ASME PRESSURE PIPING CODE B31.3, 2010 EDITION.
4) ALL FLANGE BOLT HOLES TO STRADDLE CENTER LINES (UNO).
5) THIS ISOMETRIC IS TO BE READ IN CONJUNCTION WITH DEVON NEC CORPORATION GS-5210 PIPING CLASS SPECIFICATIONS.
6) PIPING SPEC A13 IS TO SUPERCEDE A11 FOR ALL SMALL BORE VENTS, DRAINS AND INSTRUMENT CONNECTIONS AS PER 5BLUE RFI #4.
7) HYDRO TEST TO BE CHARTED FOR 1 HR.
8) 1/8" WELD GAP HAS BEEN TAKEN INTO ACCOUNT FOR ALL BW AND SW CONNECTIONS.
9) SHOP TO VERIFY ALL DIMENSIONS AND ELEVATIONS AND COORDINATES PRIOR TO FABRICATION.
10) JOINT NON-DESTRUCTIVE EXAMINATION:
ALL JOINT: 20% VISUAL, BW: 10% RT, SW: 5% RT(FIT-UP) + 10% MT, FILLET WELDS: 10% MT.

REV.	D/M/Y	DESCRIPTION	BY	CHK/ APP
0	23/08/2013	ISSUED FOR CONSTRUCTION	RR	BB

LEGEND:
- ○ : WELD NO.
- ⬭ : MARK NO.
- FFW ○ : FIELD FIT WELD
- ⊗ : FIELD WELD
- [4] : SPOOL NUMBER
- : PIPE SUPPORT

STD WELD PROC:	5B-102/103	PAINT SYSTEM:	SEE E&IL
L.T. WELD PROC:	5B-102/103	INSULATION:	NA
RATING/SPEC:	CL150/A11	SANDBLAST:	SSPC-SP6
HYDROTEST PSIG:	428	DESIGN TEMP °F:	100
RADIOGRAPHY:	10%	DESIGN PRES PSIG:	285
STRESS RELIEVE:	NO		

5Blue Process Equipment Inc.

INTI DESIGNS

TITLE: DEVON NEC CORPORATION.
FERRIER CENTRAL PROCESSING FACILITY
CENTRAL OIL BATTERY - LIQUID EXTRACTION PLANT (LEP)
PIPING ISOMETRIC
LINE NO. 002-V-01-1610-PG-1610D/PIT-1610C

CLIENT DOCUMENT NUMBER	ISOMETRIC NUMBER	REV.
TBD	5B1108-02-DR-80-015-1	0

THIS IS THE EXCLUSIVE PROPERTY OF INTI DESIGNS AND MAY NOT BE COPIED OR COMMUNICATED TO A THIRD PARTY WITHOUT THE WRITTEN AUTHORIZATION OF INTI DESIGNS.

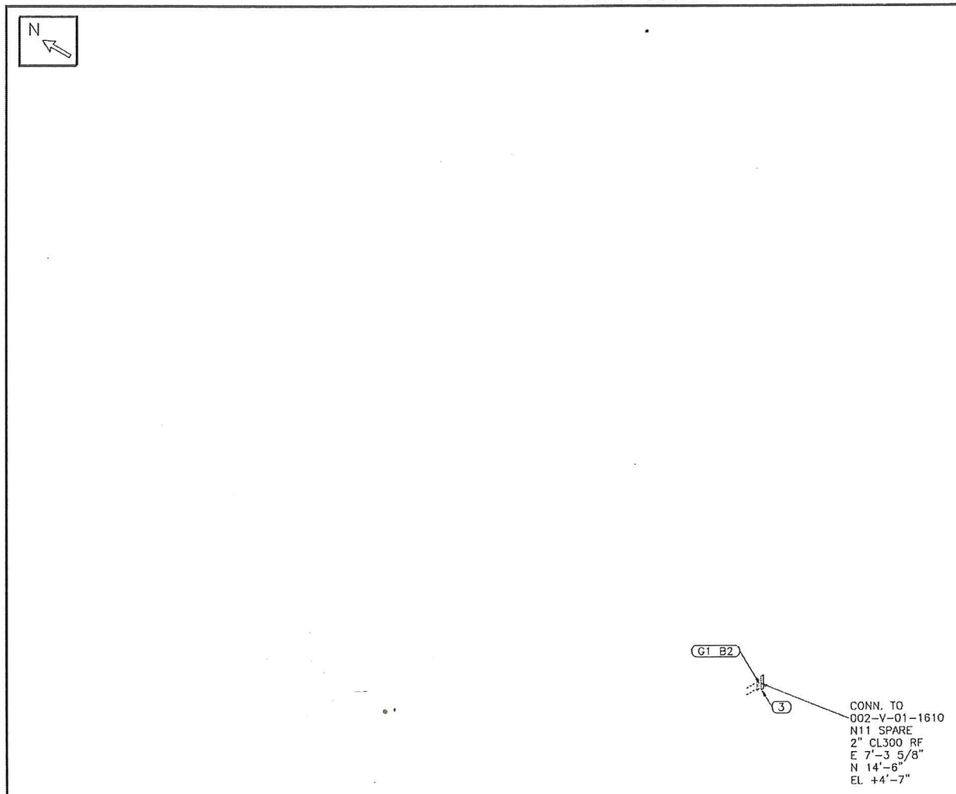

BILL OF MATERIAL

MARK	SIZE (INCH)	DESCRIPTION	QTY	WEIGHT (LBS)
		SHOP MATERIALS		
		GASKETS		
1	2	GASKET, CL300, RF, 1/8" THK, 316 SS SPIRAL WOUND, FLEX FILLER CGI, CS CENTERING RING, 316 SS INNER RING, B16.20	1	1.0
		BOLTS		
2	5/8X3 1/2	(8) STUDBOLT c/w 2 HEX NUTS, ASTM A193 GR B7, A194 GR 2H, B16.5	1	1.0
		VALVES / IN-LINE ITEMS		
3	2	BLIND FLANGE, CL300, RF, ASTM A105N, B16.5	1	8.0

AS BUILT

TOTAL SHOP WEIGHT 10.0
TOTAL FIELD WEIGHT 0.0
TOTAL WEIGHT-THIS DWG 10.0

GENERAL NOTES:

1) ALL DIMENSIONS AND ELEVATIONS ARE IN IMPERIAL UNLESS OTHERWISE SPECIFIED.
2) REFER TO 5B1108-02-DR-80-000-1 FOR PIPE SUPPORT DRAWINGS.
3) SPOOL TO BE BUILT IN ACCORDANCE WITH ASME PRESSURE PIPING CODE B31.3, 2010 EDITION.
4) ALL FLANGE BOLT HOLES TO STRADDLE CENTER LINES (UNO).
5) THIS ISOMETRIC IS TO BE READ IN CONJUNCTION WITH DEVON NEC CORPORATION GS-5210 PIPING CLASS SPECIFICATIONS.
6) PIPING SPEC A13 IS TO SUPERCEDE A11 FOR ALL SMALL BORE VENTS, DRAINS AND INSTRUMENT CONNECTIONS AS PER 5BLUE RFI #4.
7) HYDRO TEST TO BE CHARTED FOR 1 HR.
8) 1/8" WELD GAP HAS BEEN TAKEN INTO ACCOUNT FOR ALL BW AND SW CONNECTIONS.
9) SHOP TO VERIFY ALL DIMENSIONS AND ELEVATIONS AND COORDINATES PRIOR TO FABRICATION.
10) JOINT NON-DESTRUCTIVE EXAMINATION:
ALL JOINT: 20% VISUAL, BW: 10% RT, SW: 5% RT(FIT-UP) + 10% MT, FILLET WELDS: 10% MT.

REV.	D/M/Y	DESCRIPTION	BY	CHK	APP
0	23/08/2013	ISSUED FOR CONSTRUCTION	RR	BB	

LEGEND:
- ○ : WELD NO.
- ⬭ : MARK NO.
- FFW ○ : FIELD FIT WELD
- ⊠ : FIELD WELD
- 4 : SPOOL NUMBER
- : PIPE SUPPORT

STD WELD PROC:	5B-102/103	PAINT SYSTEM:	SEE E&IL
L.T. WELD PROC:	5B-102/103	INSULATION:	NA
RATING/SPEC:	CL150/A11	SANDBLAST:	SSPC-SP6
HYDROTEST PSIG:	428	DESIGN TEMP °F:	100
RADIOGRAPHY:	10%	DESIGN PRES PSIG:	285
STRESS RELIEVE:	NO		

5Blue Process Equipment Inc.

INTI DESIGNS

TITLE: DEVON NEC CORPORATION.
FERRIER CENTRAL PROCESSING FACILITY
CENTRAL OIL BATTERY – LIQUID EXTRACTION PLANT (LEP)
PIPING ISOMETRIC
LINE NO. 002-V-01-1610-SPARE

CLIENT DOCUMENT NUMBER	ISOMETRIC NUMBER	REV.
TBD	5B1108-02-DR-80-016-1	0

THIS IS THE EXCLUSIVE PROPERTY OF INTI DESIGNS AND MAY NOT BE COPIED OR COMMUNICATED TO A THIRD PARTY WITHOUT THE WRITTEN AUTHORIZATION OF INTI DESIGNS.

N

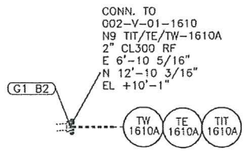

BILL OF MATERIAL

MARK	SIZE (INCH)	DESCRIPTION	QTY	WEIGHT (LBS)
		SHOP MATERIALS		
		GASKETS		
1	2	GASKET, CL300, RF, 1/8" THK, 316 SS SPIRAL WOUND, FLEX FILLER CGI, CS CENTERING RING, 316 SS INNER RING, B16.20	1	1.0
		BOLTS		
2	5/8X3 1/2	(8) STUDBOLT c/w 2 HEX NUTS, ASTM A193 GR B7, A194 GR 2H, B16.5	1	1.0

AS BUILT

GENERAL NOTES:

1) ALL DIMENSIONS AND ELEVATIONS ARE IN IMPERIAL UNLESS OTHERWISE SPECIFIED.
2) REFER TO 5B1108-02-DR-80-000-1 FOR PIPE SUPPORT DRAWINGS.
3) SPOOL TO BE BUILT IN ACCORDANCE WITH ASME PRESSURE PIPING CODE B31.3, 2010 EDITION.
4) ALL FLANGE BOLT HOLES TO STRADDLE CENTER LINES (UNO).
5) THIS ISOMETRIC IS TO BE READ IN CONJUNCTION WITH DEVON NEC CORPORATION GS-5210 PIPING CLASS SPECIFICATIONS.
6) PIPING SPEC A13 IS TO SUPERCEDE A11 FOR ALL SMALL BORE VENTS, DRAINS AND INSTRUMENT CONNECTIONS AS PER 5BLUE RFI #4.
7) HYDRO TEST TO BE CHARTED FOR 1 HR.
8) 1/8" WELD GAP HAS BEEN TAKEN INTO ACCOUNT FOR ALL BW AND SW CONNECTIONS.
9) SHOP TO VERIFY ALL DIMENSIONS AND ELEVATIONS AND COORDINATES PRIOR TO FABRICATION.
10) JOINT NON-DESTRUCTIVE EXAMINATION:
ALL JOINT: 20% VISUAL, BW: 10% RT, SW: 5% RT(FIT-UP) + 10% MT, FILLET WELDS: 10% MT.

TOTAL SHOP WEIGHT 2.0
TOTAL FIELD WEIGHT 0.0
TOTAL WEIGHT-THIS DWG 2.0

REV.	D/M/Y	DESCRIPTION	BY	CHK	APP
0	23/08/2013	ISSUED FOR CONSTRUCTION	RR	BB	

LEGEND:
○ : WELD NO.
▭ : MARK NO.
FFW ○ : FIELD FIT WELD
✕ : FIELD WELD
4 : SPOOL NUMBER
: PIPE SUPPORT

STD WELD PROC:	5B-102/103	PAINT SYSTEM:	SEE E&IL
L.T. WELD PROC:	5B-102/103	INSULATION:	NA
RATING/SPEC:	CL150/A11	SANDBLAST:	SSPC-SP6
HYDROTEST PSIG:	428	DESIGN TEMP °F:	100
RADIOGRAPHY:	10%	DESIGN PRES PSIG:	285
STRESS RELIEVE:	NO		

5Blue Process Equipment Inc.

INTI DESIGNS

TITLE: DEVON NEC CORPORATION.
FERRIER CENTRAL PROCESSING FACILITY
CENTRAL OIL BATTERY - LIQUID EXTRACTION PLANT (LEP)
PIPING ISOMETRIC
LINE NO. 002-V-01-1610-TW/TE-1610A

CLIENT DOCUMENT NUMBER	ISOMETRIC NUMBER	REV.
TBD	5B1108-02-DR-80-017-1	0

THIS IS THE EXCLUSIVE PROPERTY OF INTI DESIGNS AND MAY NOT BE COPIED OR COMMUNICATED TO A THIRD PARTY WITHOUT THE WRITTEN AUTHORIZATION OF INTI DESIGNS.

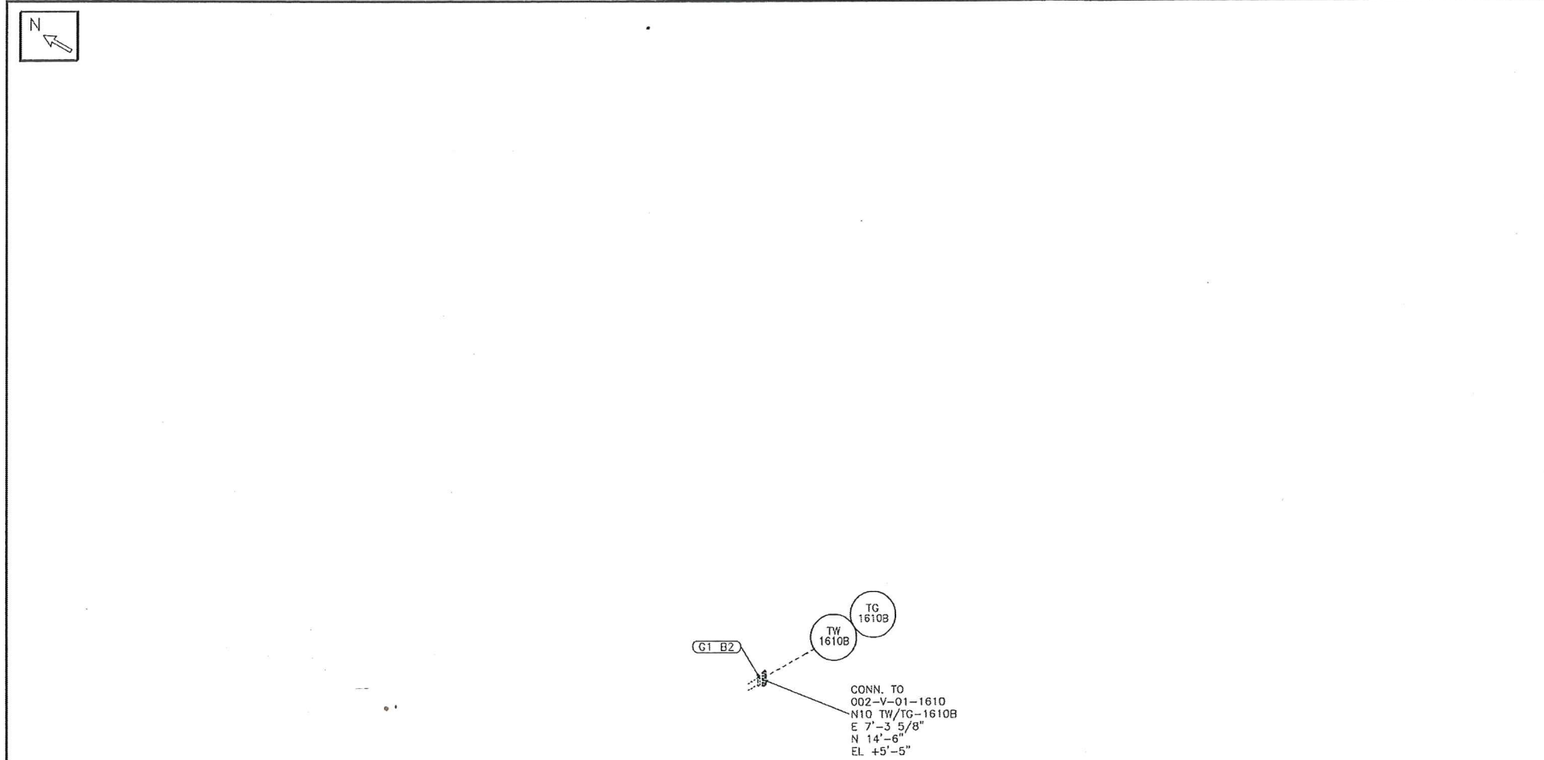

BILL OF MATERIAL

MARK	SIZE (INCH)	DESCRIPTION	QTY	WEIGHT (LBS)
		SHOP MATERIALS		
		GASKETS		
1	2	GASKET, CL300, RF, 1/8" THK, 316 SS SPIRAL WOUND, FLEX FILLER CGI, CS CENTERING RING, 316 SS INNER RING, B16.20	1	1.0
		BOLTS		
2	5/8X3 1/2	(8) STUDBOLT c/w 2 HEX NUTS, ASTM A193 GR B7, A194 GR 2H, B16.5	1	1.0

AS BUILT

TOTAL SHOP WEIGHT 2.0
TOTAL FIELD WEIGHT 0.0
TOTAL WEIGHT–THIS DWG 2.0

GENERAL NOTES:

1) ALL DIMENSIONS AND ELEVATIONS ARE IN IMPERIAL UNLESS OTHERWISE SPECIFIED.
2) REFER TO 5B1108-02-DR-80-000-1 FOR PIPE SUPPORT DRAWINGS.
3) SPOOL TO BE BUILT IN ACCORDANCE WITH ASME PRESSURE PIPING CODE B31.3, 2010 EDITION.
4) ALL FLANGE BOLT HOLES TO STRADDLE CENTER LINES (UNO).
5) THIS ISOMETRIC IS TO BE READ IN CONJUNCTION WITH DEVON NEC CORPORATION GS-5210 PIPING CLASS SPECIFICATIONS.
6) PIPING SPEC A13 IS TO SUPERCEDE A11 FOR ALL SMALL BORE VENTS, DRAINS AND INSTRUMENT CONNECTIONS AS PER 5BLUE RFI #4.
7) HYDRO TEST TO BE CHARTED FOR 1 HR.
8) 1/8" WELD GAP HAS BEEN TAKEN INTO ACCOUNT FOR ALL BW AND SW CONNECTIONS.
9) SHOP TO VERIFY ALL DIMENSIONS AND ELEVATIONS AND COORDINATES PRIOR TO FABRICATION.
10) JOINT NON-DESTRUCTIVE EXAMINATION:
ALL JOINT: 20% VISUAL, BW: 10% RT, SW: 5% RT(FIT-UP) + 10% MT, FILLET WELDS: 10% MT.

REV.	D/M/Y	DESCRIPTION	BY	CHK	APP
0	23/08/2013	ISSUED FOR CONSTRUCTION	RR	BB	

LEGEND:
- ○ : WELD NO.
- ⬭ : MARK NO.
- FFW ○ : FIELD FIT WELD
- ⊠ : FIELD WELD
- 4 : SPOOL NUMBER
- —— : PIPE SUPPORT

STD WELD PROC:	5B-102/103	PAINT SYSTEM:	SEE E&IL
L.T. WELD PROC:	5B-102/103	INSULATION:	NA
RATING/SPEC:	CL150/A11	SANDBLAST:	SSPC-SP6
HYDROTEST PSIG:	428	DESIGN TEMP °F:	100
RADIOGRAPHY:	10%	DESIGN PRES PSIG:	285
STRESS RELIEVE:	NO		

5Blue Process Equipment Inc.

INTI DESIGNS

TITLE: DEVON NEC CORPORATION.
FERRIER CENTRAL PROCESSING FACILITY
CENTRAL OIL BATTERY – LIQUID EXTRACTION PLANT (LEP)
PIPING ISOMETRIC
LINE NO. 002-V-01-1610-TW/TG-1610B

CLIENT DOCUMENT NUMBER	ISOMETRIC NUMBER	REV.
TBD	5B1108-02-DR-80-018-1	0

THIS IS THE EXCLUSIVE PROPERTY OF INTI DESIGNS AND MAY NOT BE COPIED OR COMMUNICATED TO A THIRD PARTY WITHOUT THE WRITTEN AUTHORIZATION OF INTI DESIGNS.

N

(1) SHOWN
(2) REQUIRED

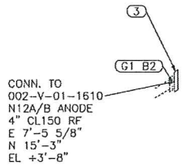

BILL OF MATERIAL

MARK	SIZE (INCH)	DESCRIPTION	QTY	WEIGHT (LBS)
		SHOP MATERIALS		
		GASKETS		
1	4	GASKET, CL150, RF, 1/8" THK, 316 SS SPIRAL WOUND, FLEX FILLER CGI, CS CENTERING RING, 316 SS INNER RING, B16.20	1	1.0
		BOLTS		
2	5/8X3 3/4	(8) STUDBOLT c/w 2 HEX NUTS, ASTM A193 GR B7, A194 GR 2H, B16.5	1	1.0
		VALVES / IN-LINE ITEMS		
3	4	BLIND FLANGE, CL150, RF, ASTM A105N, B16.5	1	17.0

GENERAL NOTES:

1) ALL DIMENSIONS AND ELEVATIONS ARE IN IMPERIAL UNLESS OTHERWISE SPECIFIED.
2) REFER TO 5B1108-02-DR-80-000-1 FOR PIPE SUPPORT DRAWINGS.
3) SPOOL TO BE BUILT IN ACCORDANCE WITH ASME PRESSURE PIPING CODE B31.3, 2010 EDITION.
4) ALL FLANGE BOLT HOLES TO STRADDLE CENTER LINES (UNO).
5) THIS ISOMETRIC IS TO BE READ IN CONJUNCTION WITH DEVON NEC CORPORATION GS-5210 PIPING CLASS SPECIFICATIONS.
6) PIPING SPEC A13 IS TO SUPERCEDE A11 FOR ALL SMALL BORE VENTS, DRAINS AND INSTRUMENT CONNECTIONS AS PER 5BLUE RFI #4.
7) HYDRO TEST TO BE CHARTED FOR 1 HR.
8) 1/8" WELD GAP HAS BEEN TAKEN INTO ACCOUNT FOR ALL BW AND SW CONNECTIONS.
9) SHOP TO VERIFY ALL DIMENSIONS AND ELEVATIONS AND COORDINATES PRIOR TO FABRICATION.
10) JOINT NON-DESTRUCTIVE EXAMINATION:
ALL JOINT: 20% VISUAL, BW: 10% RT, SW: 5% RT(FIT-UP) + 10% MT, FILLET WELDS: 10% MT.

AS BUILT

TOTAL SHOP WEIGHT 19.0
TOTAL FIELD WEIGHT 0.0
TOTAL WEIGHT-THIS DWG 19.0

REV.	D/M/Y	DESCRIPTION	BY	CHK	APP
0	23/08/2013	ISSUED FOR CONSTRUCTION	RR	BB	

LEGEND:
○ : WELD NO.
⬭ : MARK NO.
FFW ○ : FIELD FIT WELD
⊗ : FIELD WELD
[4] : SPOOL NUMBER
— : PIPE SUPPORT

STD WELD PROC:	5B-102/103	PAINT SYSTEM:	SEE E&IL
L.T. WELD PROC:	5B-102/103	INSULATION:	NA
RATING/SPEC:	CL150/A11	SANDBLAST:	SSPC-SP6
HYDROTEST PSIG:	428	DESIGN TEMP °F:	100
RADIOGRAPHY:	10%	DESIGN PRES PSIG:	285
STRESS RELIEVE:	NO		

5Blue Process Equipment Inc.

INTI DESIGNS

TITLE: DEVON NEC CORPORATION.
FERRIER CENTRAL PROCESSING FACILITY
CENTRAL OIL BATTERY - LIQUID EXTRACTION PLANT (LEP)
PIPING ISOMETRIC
LINE NO. 002-V-01-1610-ANODES

CLIENT DOCUMENT NUMBER	ISOMETRIC NUMBER	REV.
TBD	5B1108-02-DR-80-019-1	0

THIS IS THE EXCLUSIVE PROPERTY OF INTI DESIGNS AND MAY NOT BE COPIED OR COMMUNICATED TO A THIRD PARTY WITHOUT THE WRITTEN AUTHORIZATION OF INTI DESIGNS.

N

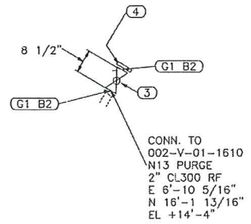

BILL OF MATERIAL

MARK	SIZE (INCH)	DESCRIPTION	QTY	WEIGHT (LBS)
		SHOP MATERIALS		
		GASKETS		
1	2	GASKET, CL300, RF, 1/8" THK, 316 SS SPIRAL WOUND, FLEX FILLER CGI, CS CENTERING RING, 316 SS INNER RING, B16.20	2	2.0
		BOLTS		
2	5/8X3 1/2	(8) STUDBOLT c/w 2 HEX NUTS, ASTM A193 GR B7, A194 GR 2H, B16.5	2	2.0
		VALVES / IN-LINE ITEMS		
3	2	BALL VALVE, CL300, RF, LEVER OP, (BA0306A1)	1	38.0
4	2	BLIND FLANGE, CL300, RF, ASTM A105N, B16.5	1	8.0

GENERAL NOTES:

1) ALL DIMENSIONS AND ELEVATIONS ARE IN IMPERIAL UNLESS OTHERWISE SPECIFIED.
2) REFER TO 5B1108-02-DR-80-000-1 FOR PIPE SUPPORT DRAWINGS.
3) SPOOL TO BE BUILT IN ACCORDANCE WITH ASME PRESSURE PIPING CODE B31.3, 2010 EDITION.
4) ALL FLANGE BOLT HOLES TO STRADDLE CENTER LINES (UNO).
5) THIS ISOMETRIC IS TO BE READ IN CONJUNCTION WITH DEVON NEC CORPORATION GS-5210 PIPING CLASS SPECIFICATIONS.
6) PIPING SPEC A13 IS TO SUPERCEDE A11 FOR ALL SMALL BORE VENTS, DRAINS AND INSTRUMENT CONNECTIONS AS PER 5BLUE RFI #4.
7) HYDRO TEST TO BE CHARTED FOR 1 HR.
8) 1/8" WELD GAP HAS BEEN TAKEN INTO ACCOUNT FOR ALL BW AND SW CONNECTIONS.
9) SHOP TO VERIFY ALL DIMENSIONS AND ELEVATIONS AND COORDINATES PRIOR TO FABRICATION.
10) JOINT NON-DESTRUCTIVE EXAMINATION:
ALL JOINT: 20% VISUAL, BW: 10% RT, SW: 5% RT(FIT-UP) + 10% MT, FILLET WELDS: 10% MT.

AS BUILT

TOTAL SHOP WEIGHT 50.0
TOTAL FIELD WEIGHT 0.0
TOTAL WEIGHT-THIS DWG 50.0

REV.	D/M/Y	DESCRIPTION	BY	CHK	APP
0	23/08/2013	ISSUED FOR CONSTRUCTION	RR	BB	

LEGEND:
○ : WELD NO.
⬭ : MARK NO.
FFW ○ : FIELD FIT WELD
✕ : FIELD WELD
4 : SPOOL NUMBER
: PIPE SUPPORT

STD WELD PROC:	5B-102/103	PAINT SYSTEM:	SEE E&IL
L.T. WELD PROC:	5B-102/103	INSULATION:	NA
RATING/SPEC:	CL150/A11	SANDBLAST:	SSPC-SP6
HYDROTEST PSIG:	428	DESIGN TEMP °F:	100
RADIOGRAPHY:	10%	DESIGN PRES PSIG:	285
STRESS RELIEVE:	NO		

5Blue Process Equipment Inc.

INTI DESIGNS

TITLE: DEVON NEC CORPORATION.
FERRIER CENTRAL PROCESSING FACILITY
CENTRAL OIL BATTERY - LIQUID EXTRACTION PLANT (LEP)
PIPING ISOMETRIC
LINE NO. 002-V-01-1610-PURGE

CLIENT DOCUMENT NUMBER	ISOMETRIC NUMBER	REV.
TBD	5B1108-02-DR-80-020-1	0

5Blue
Process Equipment Inc.

B13 Certified Welding Procedure Specifications (WPS)

2303-8th Street, Nisku Alberta, T9E-7Z3 CANADA

5BLUE PROCESS EQUIPMENT INC.

Welding Procedure Specification

in accordance with

ASME Section VIII, Section IX, B31.1 & B31.3

Welding Procedure Specification No.:	**5B-102 AW / PWHT**
Supporting PQR No. (s):	**5B-102-1, 5B-102-2, 5B-102-3, 5B-102-4**

Qualified for

Process(es):	SMAW / SMAW	**Position(s):**	All / All
Filler Metal F-No.:	F-3 / F-4	**A-No.:**	A-1 / A-1
AWS Classification:	E6010 / E7018-1	**Weld Type(s):**	Groove, Fillet, Weld Buildup
Base Metal:	P-1 Group 1 or 2	To:	P-1 Group 1 or 2
Typical Materials:	This procedure is qualified for all P-1 materials as specified in Table QW-422 of ASME Section IX for normal & sour service applications, and only P-1 Group 1 or 2 materials for applications where proven notch toughness is required.		
Diameter Range:	All	**Condition(s):**	As Welded / PWHT

As Welded: Thickness Range:	Normal & Sour Service	Impact Tested to -50°F
ASME Section IX	0.062" to 1.500"	0.125" to 1.500"
ASME Section VIII	0.062" to 1.500"	0.125" to 1.500"
ASME B31.1 / B31.3	0.062" to 0.750"	0.125" to 0.750"

PWHT: Thickness Range:	Normal & Sour Service	Impact Tested to -50°F
ASME Section IX	0.062" to 8.000"	0.125" to 8.000"
ASME Section VIII	0.062" to 8.000"	0.125" to 8.000"
ASME B31.1 / B31.3	0.062" to 8.000"	0.125" to 8.000"

Provincial Registration

ABSA

SAFETY CODES ACT - PROVINCE OF ALBERTA
WELDING PROCEDURE

Reg. No. WP 3146.2
Spec. No. 5B-102 AW/PWHT
Weld Process SMAW
Matl. Gr. P No. 1 Gr 1+2 to P No. 1 Gr 1+2
Elec. Gr. F No. 3+4 A No. 1
Th. Qual. For 38.1 mm (AW) P.W.H.T. YES/NO
203 mm (PWHT)
MIN. TH. QUAL 3.2 mm, CVN - 46° C
Yr. 10 Mo. 9 Day 17 Signed

R. ROSEBERG, P.ENG.
WELDING SPECIALIST

Provincial Registration

WELDING PROCEDURE SPECIFICATION (WPS) QW-482
(Section IX, ASME Boiler and Pressure Vessel Code)

Company Name:	5Blue Process Equipment Inc.	**By:**	Kelly R. Smith, P.Eng
WPS No.:	5B-102 AW / PWHT	**Date:**	August 17, 2010
Revision No.:	0	**Revision Date:**	----
Supporting PQR's:	5B-102-1, 5B-102-2, 5B-102-3, 5B-102-4		
Welding Process(es):	SMAW / SMAW	**Type(s):**	Manual / Manual

JOINTS QW-402

Joint Design: Butt, Tee, Lap, Corner, etc.
Backing: F-3 with or without backing
F-4 with backing only
Backing Material (Type): Similar base or weld metal or backwelding as required. No Retainers.

Joint Details
All ASME joint designs. Reference construction drawings for joint details. Where joint details are not specified, refer to typical joint detail sheet provided.

BASE METALS QW-403

P-No.: P-1 **Group No.:** 1 or 2 **To P-No.:** P-1 **Group No.:** 1 or 2
OR
Spec. type & grade: N/A **To Spec. type & grade:** N/A
OR
Chem. Analysis & Mech. Prop.: N/A **To Chem. Analysis & Mech. Prop.:** N/A

Thickness Range

	As Welded	Normal & Sour Service	Impact Tested to -50°F		
Base Metal: Groove:	Section IX	0.062" to 1.500"	0.125" to 1.500"	**Fillet:**	All
	Section VIII	0.062" to 1.500"	0.125" to 1.500"	**Fillet:**	All
	B31.1 / B31.3	0.062" to 0.750"	0.125" to 0.750"	**Fillet:**	All

	PWHT	Normal & Sour Service	Impact Tested to -50°F		
Base Metal: Groove:	Section IX	0.062" to 8.000"	0.125" to 8.000"	**Fillet:**	All
	Section VIII	0.062" to 8.000"	0.125" to 8.000"	**Fillet:**	All
	B31.1 / B31.3	0.062" to 8.000"	0.125" to 8.000"	**Fillet:**	All
Pipe Dia Range: Groove:	Unlimited			**Fillet:**	All

Other: Maximum thickness of any weld layer shall not exceed 0.500"
Limited to Group 1 or 2 when proven notch toughness properties are required.

Reference to relevant construction code is mandatory prior to production welding to determine any supplementary restrictions.

FILLER METALS QW-404

Process:	SMAW	SMAW
Specification No. (SFA):	5.1	5.1
AWS Classification No.:	E6010	E7018-1
F-No.:	F-3	F-4
A-No.:	A-1	A-1
Size of Filler Metals:	3/32", 1/8", 5/32"	3/32", 1/8", 5/32", 3/16", 1/4"
Weld Metal Thickness - Groove:	0.250" max.	**As Welded:** 1.250" max. **PWHT:** 8.000" max.
- Fillet:	Unlimited	Unlimited
Electrode-Flux (Class):	Not Applicable	Not Applicable
Flux Trade Name:	Not Applicable	Not Applicable
Alloy Flux:	Not Applicable	Not Applicable
Consumable Insert:	Not Applicable	Not Applicable
Supplemental Filler Metals:	Not Applicable	Not Applicable
Product Form:	Covered Electrode	Covered Electrode
Other:	Additional filler metal diameters may be available subject to manufacturer's inventory.	
	E6010 limited to root pass only for applications where proven notch toughness is required.	

WELDING PROCEDURE SPECIFICATION (WPS) QW-482
(Section IX, ASME Boiler and Pressure Vessel Code)

WPS # 5B-102 AW / PWHT

POSITIONS QW-405		POSTWELD HEAT TREATMENT QW-407	
Position(s) of Groove:	All	Temp. Range:	
Welding Progression:	F-3 SMAW: Vertical Up or Down	Time Range:	*(See Page 5)*
	F-4 SMAW: Vertical Up	Heating:	
Position(s) of Fillet:	All	Cooling:	
PREHEAT QW-406		**GAS QW-408**	
Temperature Min.:		Shielding Gas(es):	
Interpass Min.:	*(See Page 4 for As Welded)*	Composition:	*(Not Applicable)*
Interpass Temp. Max.:	*(See Page 5 for PWHT)*	Flow Rate:	
Preheat Maintenance:	Monitor using tempilstiks, pyrometer or other suitable methods.	Backing Gas:	
		Backing Gas Rate:	

ELECTRICAL CHARACTERISTICS QW-409				
Current:	F-3 SMAW:	Direct - DC	F-4 SMAW:	Direct - DC
Polarity:	F-3 SMAW:	Reverse - EP	F-4 SMAW:	Reverse - EP
Amps (Range):	F-3 SMAW:	40 - 180	F-4 SMAW:	45 - 360
Volts (Range):	F-3 SMAW:	18 - 34	F-4 SMAW:	18 - 34
Travel Speed (Range) - ipm:	F-3 SMAW:	1 - 16	F-4 SMAW:	1 - 20
Maximum Heat Input: As Welded				
0.125" to 0.625":	F-3 SMAW:	45 080 J/in	F-4 SMAW:	48 960 J/in
0.625" to 1.500":	F-3 SMAW:	45 080 J/in	F-4 SMAW:	74 750 J/in
Maximum Heat Input: PWHT				
0.625" to 8.000"	F-3 SMAW:	51 000 J/in	F-4 SMAW:	74 250 J/in
Tungsten Electrode Type & Size:	Not Applicable			
Mode of Metal Transfer for GMAW:	Not Applicable			
Electrode Wire feed speed range:	Not Applicable			
Other:	Maximum heat inputs mandatory only when proven notch toughness is required.			

TECHNIQUE QW-410	
String or Weave Bead:	String and weave. Weave size shall be controlled to prevent exceeding maximum heat inputs.
Orifice or Gas Cup Size:	Not Applicable
Initial Cleaning:	Base material must be thoroughly cleaned of all foreign material (scale, rust, oil, grease, paint, tar, etc.) at least 1" back on each side of the joint prior to welding. All surfaces to be welded shall be smooth, uniform and free from notches, slag, fins and burrs.
Interpass Cleaning:	Perform by wire brush, chipping hammer, power brushing, grinding, etc. after each weld layer.
Method of Back Gouging:	Arc air, gouge, grind, etc., if required. Grind to clean metal where thermal processes are used.
Oscillation:	Not Applicable
Contact Tube to Work Distance:	Not Applicable
Multiple or Single Pass (per side):	Single or multiple passes per side. Multiple only when proven notch toughness is required.
Multiple or Single Electrodes:	Single electrodes only
Peening:	Peening is not allowed

TYPICAL WELDING PARAMETERS

	Filler Metal		Current			
Process	AWS Classification	Diameter (in)	Type & Polarity	Amp Range	Volt Range	Travel Speed (IPM)
SMAW	E6010	3/32	DC EP	40 - 100	18 - 30	1 - 12
SMAW	E6010	1/8	DC EP	50 - 150	20 - 32	2 - 14
SMAW	E6010	5/32	DC EP	70 - 180	22 - 34	4 - 16
SMAW	E7018-1	3/32	DC EP	45 - 130	18 - 28	1 - 14
SMAW	E7018-1	1/8	DC EP	60 - 180	18 - 30	2 - 16
SMAW	E7018-1	5/32	DC EP	90 - 230	20 - 32	3 - 18
SMAW	E7018-1	3/16	DC EP	130 - 290	20 - 34	4 - 19
SMAW	E7018-1	1/4	DC EP	180 - 360	22 - 34	4 - 20
Notes:	Number of weld layers and size of filler metal may vary with thickness of base material and position of weld. 1/4" E7018-1 electrodes are limited to flat (1G) position only.					

WELDING PROCEDURE SPECIFICATION (WPS) QW-482
(Section IX, ASME Boiler and Pressure Vessel Code)

WPS # 5B-102 AW / PWHT

AS WELDED: PREHEAT & INTERPASS TEMPERATURE MINIMUM AND MAXIMUM	
Section I :	50°F minimum for all P-1 materials except as listed below :
	200°F if the joint thickness exceeds 1.00" and the specified carbon content exceeds 0.30%
Section VIII :	50°F minimum for all P-1 materials except as listed below :
	200°F if the joint thickness exceeds 1.00"
B31.1 :	50°F minimum for all P-1 materials except as listed below :
	175°F if the joint thickness exceeds 1.00" and the specified carbon content exceeds 0.30%
B31.3 :	50°F for all P-1 materials except as listed below:
	175°F if the specified minimum tensile strength of the base material exceeds 71 ksi
	175°F if the nominal wall thickness exceeds 1"
Max. Interpass Temp.:	650°F for normal service, 550°F for applications where proven notch toughness is required

Reference to relevant construction codes is mandatory prior to production welding to determine any supplementary restrictions.

WELDING PROCEDURE SPECIFICATION (WPS) QW-482
(Section IX, ASME Boiler and Pressure Vessel Code)

WPS # 5B-102 AW / PWHT

PREHEAT & INTERPASS TEMPERATURE MINIMUM AND MAXIMUM	
Section I :	50°F minimum for all P-1 materials except as listed below :
	175°F if the joint thickness exceeds 1.00" and the specified carbon content exceeds 0.30%
Section VIII :	50°F minimum for all P-1 materials except as listed below :
	175°F if the joint thickness exceeds 1.00" and the specified carbon content exceeds 0.30%
B31.1 :	50°F minimum for all P-1 materials except as listed below :
	175°F if the joint thickness exceeds 1.00" and the specified carbon content exceeds 0.30%
B31.3 :	50°F for all P-1 materials except as listed below:
	175°F if the specified minimum tensile strength of the base material exceeds 71 ksi
	175°F if the nominal wall thickness exceeds 1"
Max. Interpass Temp.:	650°F for normal service, 550°F for applications where proven notch toughness is required

POSTWELD HEAT TREATMENT	
Section I :	1100°F minimum holding temperature
	Up to 2" wt: 1 hour per inch nominal wall thickness, 15 minutes minimum holding time
	Over 2" wt: 2 hours plus 15 minutes for each additional inch over 2"
Section VIII :	1100°F minimum holding temperature
	Up to 2" wt: 1 hour per inch nominal wall thickness, 15 minutes minimum holding time
	Over 2" wt: 2 hours plus 15 minutes for each additional inch over 2"
B31.1 :	1100°F to 1200°F holding temperature range
	Up to 2" wt: 1 hour per inch nominal wall thickness, 15 minutes minimum holding time
	Over 2" wt: 2 hours plus 15 minutes for each additional inch over 2"
B31.3 :	1100°F to 1200°F holding temperature range
	1 hour per inch nominal wall thickness, 1 hour minimum holding time
Maximum PWHT Time:	11 hours 15 minutes for applications where proven notch toughness is required

PWHT HEATING & COOLING REQUIREMENTS		
Section I :	Heating:	Heat slowly to holding temperature
	Cooling:	Cool slowly in a still atmosphere to a temperature not exceeding 800°F
Section VIII * :	Heating:	Ambient to 800°F at moderate rate
		800°F to holding temperature at 400°F ÷ wt per hr; maximum 400°F per hr
	Cooling:	Holding temperature to 800°F at 500°F ÷ wt per hr; maximum 500°F per hr
		800°F to ambient by still air cooling
B31.1 :	Heating:	600°F to holding temperature at 600°F ÷ 1/2 wt per hr; maximum 600°F per hr
	Cooling:	Holding temperature to 600°F at 600°F ÷ 1/2 wt per hr; maximum 600°F per hr
B31.3 :	Heating:	Heat to holding temperature at moderate rate
	Cooling:	Cool at moderate rate
*** Note :**	Section VIII heating & cooling rates are recommended for most applications	

Reference to relevant construction codes is mandatory prior to production welding to determine any supplementary restrictions.

Typical Joint Details

QW-482

Prepared by: Qualimet

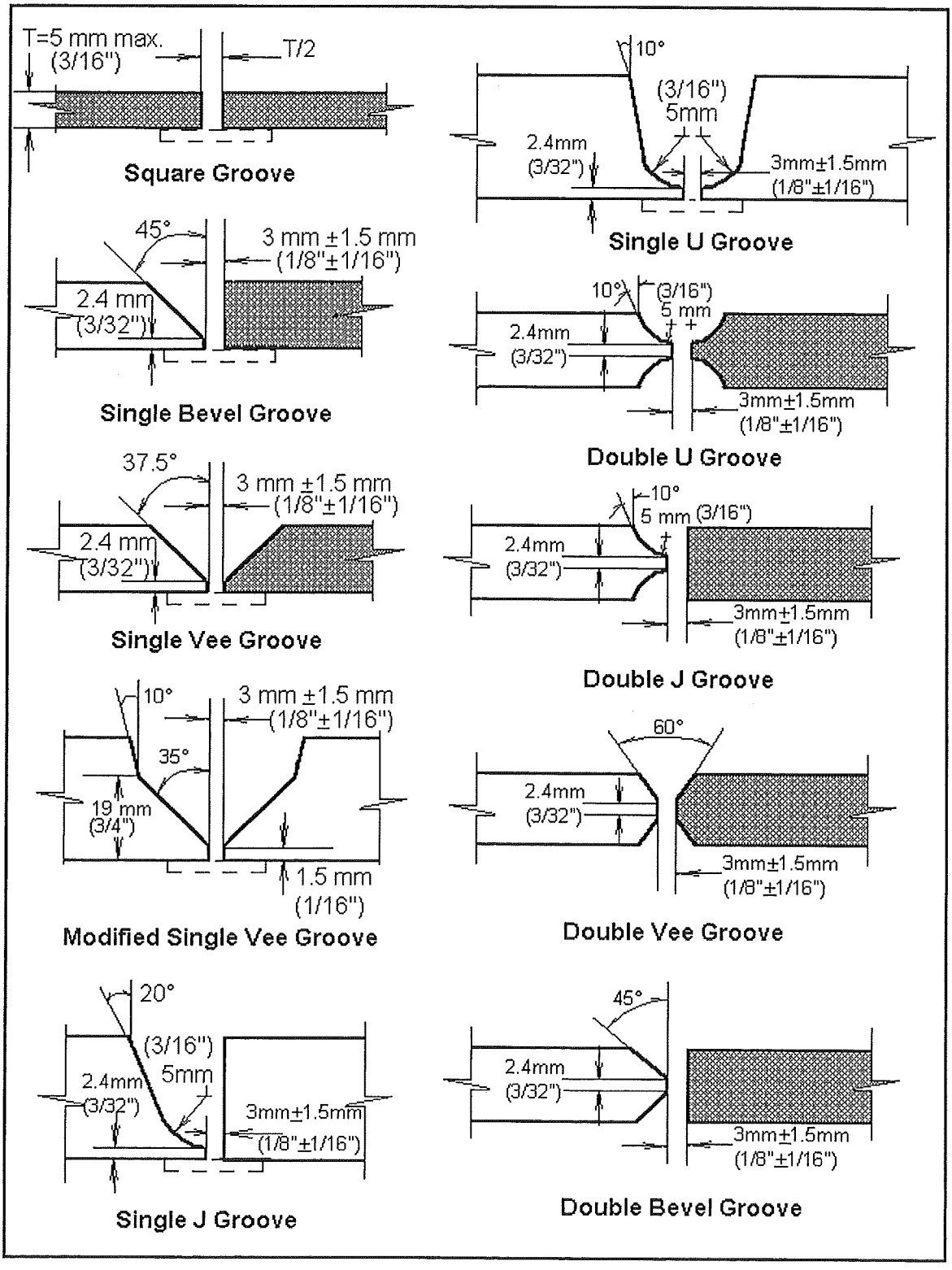

PROCEDURE QUALIFICATION RECORD (PQR) QW-483

(Section IX, ASME Boiler and Pressure Vessel Code)

Company Name:	5Blue Process Equipment Inc.	**By:**	Kelly R. Smith, P.Eng
PQR No.:	5B-102-1	**Date:**	August 17, 2010
Revision No.:	0	**Revision Date:**	-----
WPS No.:	5B-102 AW / PWHT		
Welding Process(es):	SMAW / SMAW	**Types:**	Manual / Manual

JOINTS QW-402

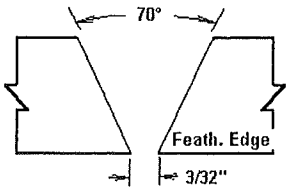

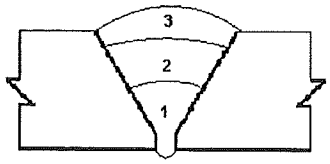

BASE METALS QW-403

Material Spec.:	SA-516		SA-516
Grade/Type/Class:	Gr. 60/70		Gr. 60/70
P-No. Group No.:	P-1 Group 1/2	to	P-1 Group 1/2
Heat No.:	49074-04703		49074-04703
Carbon Equivalent (CE):	0.38		0.38
Thickness & Diameter:	0.249" Plate (machined)		

POSTWELD HEAT TREATMENT QW-407

Temperature:	
Time:	
Heating:	*(Not Applicable)*
Cooling:	
Other:	

PREHEAT QW-406

Preheat Temp. Min.:	50°F
Interpass Temp. Max.:	550°F
Interpass Temp. Min.:	50°F
Other:	Temperature monitored using tempilstiks

POSITIONS QW-405

Process:	F-3 SMAW	F-4 SMAW
Position:	3-G	3-G
Progression:	Vertical Up	Vertical Up
Other:	Not Applicable	Not Applicable

FILLER METALS QW-404

Process:	F-3 SMAW	F-4 SMAW
SFA Specification No.:	5.1	5.1
AWS Classification No.:	E6010	E7018-1
F-No.:	F-3	F-4
A-No.:	A-1	A-1
Size of Filler Metal:	3/32", 1/8"	1/8"
Deposited Weld Metal:	0.124"	0.125"
Manufacturer:	Lincoln Electric	Air Liquide
Trade Name:	Fleetweld 5+	LA 18 PLUS
Heat Number:	Not Recorded	Not Recorded
Product Form:	Covered Electrode	Covered Electrode
Other:	Not Applicable	Not Applicable

SHIELDING GAS QW-408

Shielding Gas:	
Composition:	*(Not Applicable)*
Flow Rate:	

ELECTRICAL CHARACTERISTICS QW-409

Process:	F-3 SMAW	F-4 SMAW
Current:	Direct (DC)	Direct (DC)
Polarity:	Reverse (EP)	Reverse (EP)
Volts:	24 - 28	20 - 26
Amps:	40 - 70	65 - 85
Travel Speed (ipm):	2.0 - 3.8	2.5 - 7.2
Maximum Heat Input (J/in):	45 080	48 960
Tungsten Electrode:	Not Applicable	Not Applicable
STT Program Settings:	Not Applicable	Not Applicable
Other:	Not Applicable	Not Applicable

TECHNIQUE QW-410

String or Weave:	String	String & Weave
Oscillation:	Not Applicable	Not Applicable
Single / Multi Pass:	Multiple passes from one side.	
Single / Multi Electrodes:	Single	Single
Wire Stick Out:	Not Applicable	Not Applicable
Nozzle / Cup Size:	Not Applicable	Not Applicable

PROCEDURE QUALIFICATION RECORD (PQR) QW-483
(Section IX, ASME Boiler and Pressure Vessel Code)

PQR # 5B-102-1

Tensile Test
QW-462

Specimen No.	Width in	Thickness in	Area in^2	Ultimate Total Load Lb	Ultimate Unit Stress ksi	Type of Failure & Location
LX-T1	0.740	0.247	0.183	13 932	76.0	Ductile - Base Metal
LX-T2	0.757	0.159	0.120	9 549	79.5	Ductile - Base Metal

Guided Bend Tests
QW-462

Specimen No.	Type	Figure	Result
LX-B1	TFB	QW-462.3(a)	Pass
LX-B2	TRB	QW-462.3(a)	Pass
LX-B3	TFB	QW-462.3(a)	Pass
LX-B4	TRB	QW-462.3(a)	Pass

Toughness Tests
QW-170

Specimen No.	Notch Location	Notch Type	Qual. Temp	Impact Values (ft-lbs)	% Shear	Lateral Exp Inches	Drop Weight Break	Drop Weight No Brk
LX-1	Weld	V-Notch	-50°F	63	60	0.032	N/A	N/A
LX-2	Weld	V-Notch	-50°F	62	50	0.035	N/A	N/A
LX-3	Weld	V-Notch	-50°F	56	40	0.039	N/A	N/A
LX-4	HAZ	V-Notch	-50°F	25	30	0.008	N/A	N/A
LX-5	HAZ	V-Notch	-50°F	38	30	0.025	N/A	N/A
LX-6	HAZ	V-Notch	-50°F	29	30	0.013	N/A	N/A

Fillet-Weld Tests
Not Applicable

Result-Satisfactory: Yes _____ No _____ Pen. into Parent Material: Yes _____ No _____
Macro-Results:

Other Tests

Type of Test: Hardness Testing - See Attached Report
Other:

Welder's Name: Craig Tupper Reg. No.: W-22902 Stamp ID: LX
Tests Conducted By: Qualimet Lab. Test No.: 1111-10001

We certify that the statements in this record are correct and that the test welds were prepared, welded, and tested in accordance with the requirements of Section IX of the ASME Code.

Manufacturer: 5Blue Process Equipment Inc.
Date: August 17, 2010 Certified By: Kelly R. Smith, P.Eng

Qualimet

• 7817 CORONET ROAD, EDMONTON, AB T6E 4N7 • (780) 469-5870 • FAX (780) 465-5829
• CALGARY (403) 278-9862 • 1-800-621-8979 • www.qualimetinc.com

"Your source of Quality Materials Engineering"

MECHANICAL TEST REPORT

for Procedure Qualification Record # 5B-102-1

Client :	5Blue Process Equipment Inc.	**Job Number:**	1111-10001
Address:	2303 - 8th Street Nisku AB T9E 7Z1	**Date:**	August 17, 2010
Materials:	SA-516 Gr. 60/70		
Size:	0.249" Plate (machined)	**Condition:**	As Welded
Test Specification:		**ASME Section IX**	

Tensile Tests QW-462.1(a)

Sample Identification:	LX-T1	LX-T2
Sample Size - inch:(W x T)	0.740 x 0.247	0.757 x 0.159
Least X-Sect. Area - in^2:	0.183	0.120
Ultimate Load - lbs:	13 932	9 549
Ult. Ten. Strength - ksi:	76.0	79.5
Character of Failure:	Ductile	Ductile
Location of Failure:	Base Metal	Base Metal
Req'd Tensile Strength - ksi:	70.0	70.0
Pass or Fail:	Pass	Pass
Remarks:	-----	-----

Bend Tests QW-462.3(a)

Sample Identification:	LX-B1	LX-B2	LX-B3	LX-B4
***Type of Bend Test:**	TFB	TRB	TFB	TRB
Pass or Fail:	Pass	Pass	Pass	Pass
Remarks:	-----	-----	-----	-----

*Types of Bend Tests **TSB, TFB, TRB = transverse side, face or root bend** **LSB, LFB, LRB = longitudinal side, face or root bend**

We certify that the statements in this record are acceptable, in accordance with the requirements of ASME Section IX.

TEST RESULTS CERTIFIED BY:

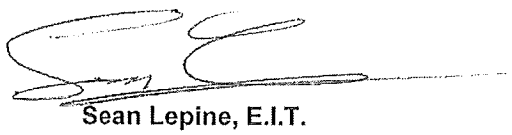

Qualimet

Sean Lepine, E.I.T.

Qualimet

• 7817 CORONET ROAD, EDMONTON, AB T6E 4N7 • (780) 469-5870 • FAX (780) 465-5829
• CALGARY (403) 278-9862 • 1-800-621-8979 • www.qualimetinc.com

"Your source of Quality Materials Engineering"

CHARPY IMPACT TEST REPORT

for Procedure Qualification Record # 5B-102-1

Client :	5Blue Process Equipment Inc.	**Job Number:**	1111-10001
Address:	2303 - 8th Street Nisku AB T9E 7Z1	**Date:**	August 17, 2010
Materials:	SA-516 Gr. 60/70		
Size:	0.249" Plate (machined)	**Condition:**	As Welded
Test Specification:	ASME Section IX, ASME Section VIII UG-84, ASTM A-370		

Specimen Type:	Charpy V-Notch
Qualification Temperature:	-50° F

Specimen Size (mm): 5.2

Sample Set	Sample Number	Actual Impact Energy (ft-lb)	Full Size ft-lb	Shear (%)	Lateral Expansion Inches
Weld	LX-1	33	63	60	0.032
	LX-2	32	62	50	0.035
	LX-3	29	56	40	0.039
	Average:	**31**	**60**	**50**	**0.035**

We certify that the statements in this record are acceptable and that the specimen(s) were prepared and tested in accordance with the requirements of the current edition of ASME Section IX and the latest addenda.

TEST RESULTS CERTIFIED BY:

Qualimet

Sean Lepine, E.I.T.

Qualimet

• 7817 CORONET ROAD, EDMONTON, AB T6E 4N7 • (780) 469-5870 • FAX (780) 465-5829
• CALGARY (403) 278-9862 • 1-800-621-8979 • www.qualimetinc.com

"Your source of Quality Materials Engineering"

CHARPY IMPACT TEST REPORT

for Procedure Qualification Record # 5B-102-1

Client :	5Blue Process Equipment Inc.	**Job Number:**	1111-10001
Address:	2303 - 8th Street Nisku AB T9E 7Z1	**Date:**	August 17, 2010
Materials:	SA-516 Gr. 60/70		
Size:	0.249" Plate (machined)	**Condition:**	As Welded
Test Specification:	ASME Section IX, ASME Section VIII UG-84, ASTM A-370		

Specimen Type:	Charpy V-Notch
Qualification Temperature:	-50° F

Specimen Size (mm): 5.2

Sample Set	Sample Number	Actual Impact Energy (ft-lb)	Full Size ft-lb	Shear (%)	Lateral Expansion Inches
HAZ	LX-4	13	25	30	0.008
	LX-5	20	38	30	0.025
	LX-6	15	29	30	0.013
	Average:	**16**	**31**	**30**	**0.015**

We certify that the statements in this record are acceptable and that the specimen(s) were prepared and tested in accordance with the requirements of the current edition of ASME Section IX and the latest addenda.

TEST RESULTS CERTIFIED BY:

Qualimet

Sean Lepine, E.I.T.

Qualimet

• 7817 CORONET ROAD, EDMONTON, AB T6E 4N7 • (780) 469-5870 • FAX (780) 465-5829
• CALGARY (403) 278-9662 • 1-800-621-8979 • www.qualimetinc.com

"Your source of Quality Materials Engineering"

HARDNESS TEST REPORT

for Procedure Qualification Record # 5B-102-1

Client :	5Blue Process Equipment Inc.	**Job Number:**	1111-10001
Address:	2303 - 8th Street Nisku AB T9E 7Z1	**Date:**	August 17, 2010
Materials:	SA-516 Gr. 60/70		
Size:	0.249" Plate (machined)	**Condition:**	As Welded
Test Specification:	NACE RP-0472		

Test Method:	Hardness testing performed in accordance with ASTM E-92 (Vickers Hardness of Metallic Materials) using a Vickers tester with a 1 kg load

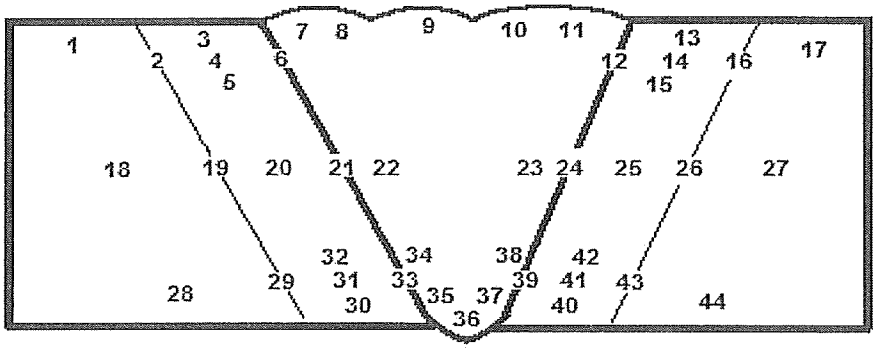

Vickers Hardness Values

1	174	**10**	199	**19**	166	**28**	165	**37**	171
2	161	**11**	198	**20**	179	**29**	159	**38**	174
3	184	**12**	204	**21**	185	**30**	174	**39**	183
4	204	**13**	176	**22**	172	**31**	180	**40**	170
5	190	**14**	198	**23**	180	**32**	184	**41**	177
6	190	**15**	200	**24**	198	**33**	170	**42**	174
7	206	**16**	172	**25**	197	**34**	171	**43**	172
8	192	**17**	174	**26**	162	**35**	173	**44**	175
9	197	**18**	165	**27**	166	**36**	177		

We certify that the statements in this record are acceptable, in accordance with the requirements of NACE RP 0472. RP 0472-2005 paragraph 5.3 states "The maximum allowable HAZ hardness shall be 248 HV the maximum weld deposit hardness should be 248 HV and the average weld deposit hardness should not exceed 210 HV"

TEST RESULTS CERTIFIED BY:

Qualimet

Sean Lepine, E.I.T.

PROCEDURE QUALIFICATION RECORD (PQR) QW-483
(Section IX, ASME Boiler and Pressure Vessel Code)

Company Name:	5Blue Process Equipment Inc.	**By:**	Kelly R. Smith, P.Eng
PQR No.:	5B-102-2	**Date:**	August 17, 2010
Revision No.:	0	**Revision Date:**	-----
WPS No.:	5B-102 AW / PWHT		
Welding Process(es):	SMAW / SMAW	**Types:**	Manual / Manual

JOINTS QW-402

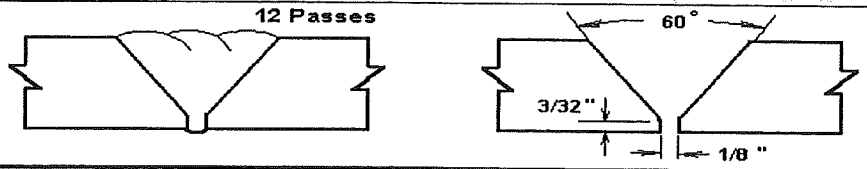

BASE METALS QW-403				POSTWELD HEAT TREATMENT QW-407	
Material Spec.:	SA-516		SA-516	**Temperature:**	
Grade/Type/Class:	Gr. 60/70		Gr. 60/70	**Time:**	
P-No. Group No.:	P-1 Group 1/2	to	P-1 Group 1/2	**Heating:**	*(Not Applicable)*
Heat No.:	292924-99513		292924-95513	**Cooling:**	
Carbon Equivalent (CE):	0.40		0.40	**Other:**	
Thickness & Diameter:	0.750" Plate				

PREHEAT QW-406		POSITIONS QW-405		
Preheat Temp. Min.:	50°F	**Process:**	F-3 SMAW	F-4 SMAW
Interpass Temp. Max.:	550°F	**Position:**	3-G	3-G
Interpass Temp. Min.:	50°F	**Progression:**	Vertical Up	Vertical Up
Other:	Temperature monitored using tempilstiks	**Other:**	Not Applicable	Not Applicable

FILLER METALS QW-404		
Process:	F-3 SMAW	F-4 SMAW
SFA Specification No.:	5.1	5.1
AWS Classification No.:	E6010	E7018-1
F-No.:	F-3	F-4
A-No.:	A-1	A-1
Size of Filler Metal:	1/8"	3/32", 1/8"
Deposited Weld Metal:	0.125"	0.625"
Manufacturer:	Lincoln Electric	Air Liquide
Trade Name:	Fleetweld 5+	LA 18 PLUS
Heat Number:	Not Recorded	Not Recorded
Product Form:	Covered Electrode	Covered Electrode
Other:	Not Applicable	Not Applicable

SHIELDING GAS QW-408		
Shielding Gas:		
Composition:	*(Not Applicable)*	
Flow Rate:		

ELECTRICAL CHARACTERISTICS QW-409		
Process:	F-3 SMAW	F-4 SMAW
Current:	Direct (DC)	Direct (DC)
Polarity:	Reverse (EP)	Reverse (EP)
Volts:	25 - 30	20 - 25
Amps:	50 - 60	75 - 115
Travel Speed (ipm):	2.7 - 4.7	2.3 - 6.7
Maximum Heat Input (J/in):	39 600	74 750
Tungsten Electrode:	Not Applicable	Not Applicable
STT Program Settings:	Not Applicable	Not Applicable
Other:	Not Applicable	Not Applicable

TECHNIQUE QW-410		
String or Weave:	String	String & Weave
Oscillation:	Not Applicable	Not Applicable
Single / Multi Pass:	Multiple passes from one side	
Single / Multi Electrodes:	Single	Single
Wire Stick Out:	Not Applicable	Not Applicable
Nozzle / Cup Size:	Not Applicable	Not Applicable

PROCEDURE QUALIFICATION RECORD (PQR) QW-483
(Section IX, ASME Boiler and Pressure Vessel Code)

PQR # 5B-102-2

Tensile Test
QW-462

Specimen No.	Width in	Thickness in	Area in^2	Ultimate Total Load Lb	Ultimate Unit Stress ksi	Type of Failure & Location
LY-T1	0.757	0.763	0.578	46 329	80.0	Ductile - Base Metal
LY-T2	0.759	0.760	0.577	45 851	79.5	Ductile - Base Metal

Guided Bend Tests
QW-462

Specimen No.	Type	Figure	Result
LY-B1	TSB	QW-462.2	Pass
LY-B2	TSB	QW-462.2	Pass
LY-B3	TSB	QW-462.2	Pass
LY-B4	TSB	QW-462.2	Pass

Toughness Tests
QW-170

Specimen No.	Notch Location	Notch Type	Qual. Temp	Impact Values (ft-lbs)	% Shear	Lateral Exp Inches	Drop Weight Break	Drop Weight No Brk
LY-1	Weld	V-Notch	-50°F	55	50	0.046	N/A	N/A
LY-2	Weld	V-Notch	-50°F	58	40	0.042	N/A	N/A
LY-3	Weld	V-Notch	-50°F	95	60	0.072	N/A	N/A
LY-4	HAZ	V-Notch	-50°F	129	80	0.090	N/A	N/A
LY-5	HAZ	V-Notch	-50°F	127	80	0.092	N/A	N/A
LY-6	HAZ	V-Notch	-50°F	112	70	0.075	N/A	N/A

Fillet-Weld Tests
Not Applicable

Result-Satisfactory: Yes _____ No _____ Pen. into Parent Material: Yes _____ No _____
Macro-Results:

Other Tests
Not Applicable

Type of Test: _____
Other:

Welder's Name: Craig Tupper Reg. No.: W-22902 Stamp ID: LY
Tests Conducted By: Qualimet Lab. Test No.: 1111-10001

We certify that the statements in this record are correct and that the test welds were prepared, welded, and tested in accordance with the requirements of Section IX of the ASME Code.

Manufacturer: 5Blue Process Equipment Inc.
Date: August 17, 2010 Certified By: Kelly R. Smith, P.Eng

Qualimet

• 7817 CORONET ROAD, EDMONTON, AB T6E 4N7 • (780) 469-5870 • FAX (780) 465-5829
• CALGARY (403) 278-9862 • 1-800-621-8979 • www.qualimetinc.com

"Your source of Quality Materials Engineering"

MECHANICAL TEST REPORT

for Procedure Qualification Record # 5B-102-2

Client :	5Blue Process Equipment Inc.	**Job Number:**	1111-10001
Address:	2303 - 8th Street Nisku AB T9E 7Z1	**Date:**	August 17, 2010
Materials:	SA-516 Gr. 60/70		
Size:	0.750" Plate	**Condition:**	As Welded
Test Specification:		**ASME Section IX**	

Tensile Tests QW-462.1(a)

Sample Identification:	LY-T1	LY-T2
Sample Size - inch:(W x T)	0.757 x 0.763	0.759 x 0.760
Least X-Sect. Area - in^2:	0.578	0.577
Ultimate Load - lbs:	46 329	45 851
Ult. Ten. Strength - ksi:	80.0	79.5
Character of Failure:	Ductile	Ductile
Location of Failure:	Base Metal	Base Metal
Req'd Tensile Strength - ksi:	70.0	70.0
Pass or Fail:	Pass	Pass
Remarks:	-----	-----

Bend Tests QW-462.2

Sample Identification:	LY-B1	LY-B2	LY-B3	LY-B4
***Type of Bend Test:**	TSB	TSB	TSB	TSB
Pass or Fail:	Pass	Pass	Pass	Pass
Remarks:	-----	-----	-----	-----

*Types of Bend Tests **TSB, TFB, TRB = transverse side, face or root bend** **LSB, LFB, LRB = longitudinal side, face or root bend**

We certify that the statements in this record are acceptable, in accordance with the requirements of ASME Section IX.

TEST RESULTS CERTIFIED BY:

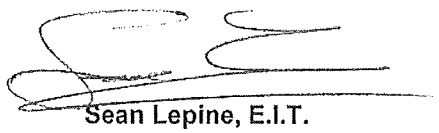

Sean Lepine, E.I.T.

Qualimet

Qualimet

• 7817 CORONET ROAD, EDMONTON, AB T6E 4N7 • (780) 469-5870 • FAX (780) 465-5829
• CALGARY (403) 278-9862 • 1-800-621-8979 • www.qualimetinc.com

"Your source of Quality Materials Engineering"

CHARPY IMPACT TEST REPORT

for Procedure Qualification Record # 5B-102-2

Client :	5Blue Process Equipment Inc.	**Job Number:**	1111-10001
Address:	2303 - 8th Street Nisku AB T9E 7Z1	**Date:**	August 17, 2010
Materials:	SA-516 Gr. 60/70		
Size:	0.750" Plate	**Condition:**	As Welded
Test Specification:	ASME Section IX, ASME Section VIII UG-84, ASTM A-370		

Specimen Type:	Charpy V-Notch
Qualification Temperature:	-50° F

Specimen Size (mm): 10

Sample Set	Sample Number	Actual Impact Energy (ft-lb)	Full Size ft-lb	Shear (%)	Lateral Expansion Inches
Weld	LY-1	55	55	50	0.046
	LY-2	58	58	40	0.042
	LY-3	95	95	60	0.072
	Average:	**69**	**69**	**50**	**0.053**

We certify that the statements in this record are acceptable and that the specimen(s) were prepared and tested in accordance with the requirements of the current edition of ASME Section IX and the latest addenda.

TEST RESULTS CERTIFIED BY:

Sean Lepine, E.I.T.

Qualimet

Qualimet

• 7817 CORONET ROAD, EDMONTON, AB T6E 4N7 • (780) 469-5870 • FAX (780) 465-5829
• CALGARY (403) 278-9862 • 1-800-621-8979 • www.qualimetinc.com

"Your source of Quality Materials Engineering"

CHARPY IMPACT TEST REPORT

for Procedure Qualification Record # 5B-102-2

Client :	5Blue Process Equipment Inc.	**Job Number:**	1111-10001
Address:	2303 - 8th Street Nisku AB T9E 7Z1	**Date:**	August 17, 2010
Materials:	SA-516 Gr. 60/70		
Size:	0.750" Plate	**Condition:**	As Welded
Test Specification:	ASME Section IX, ASME Section VIII UG-84, ASTM A-370		

Specimen Type:	Charpy V-Notch
Qualification Temperature:	-50° F

Specimen Size (mm): 10

Sample Set	Sample Number	Actual Impact Energy (ft-lb)	Full Size ft-lb	Shear (%)	Lateral Expansion Inches
HAZ	LY-4	129	129	80	0.090
	LY-5	127	127	80	0.092
	LY-6	112	112	70	0.075
	Average:	**123**	**123**	**77**	**0.086**

We certify that the statements in this record are acceptable and that the specimen(s) were prepared and tested in accordance with the requirements of the current edition of ASME Section IX and the latest addenda.

TEST RESULTS CERTIFIED BY:

Qualimet

Sean Lepine, E.I.T.

PROCEDURE QUALIFICATION RECORD (PQR) QW-483
(Section IX, ASME Boiler and Pressure Vessel Code)

Company Name:	5Blue Process Equipment Inc.	**By:**	Kelly R. Smith, P.Eng
PQR No.:	5B-102-3	**Date:**	August 17, 2010
Revision No.:	0	**Revision Date:**	-----
WPS No.:	5B-102 AW / PWHT		
Welding Process(es):	SMAW / SMAW	**Types:**	Manual / Manual

JOINTS QW-402

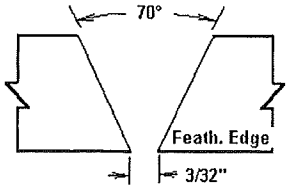

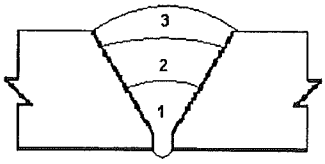

BASE METALS QW-403

Material Spec.:	SA-516		SA-516
Grade/Type/Class:	Gr. 60/70		Gr. 60/70
P-No. Group No.:	P-1 Group 1/2	to	P-1 Group 1/2
Heat No.:	49074-04703		49074-04703
Carbon Equivalent (CE):	0.38		0.38
Thickness & Diameter:	0.249" Plate (machined)		

POSTWELD HEAT TREATMENT QW-407

Temperature:	1150°F ± 25°F
Time:	3 hours soak at temperature
Heating:	Ambient to 800°F @ moderate rate, 800°F to 1150°F @ 400°F/hr max
Cooling:	1150°F to 800°F @ 500°F/hr max, 800°F to ambient @ still air cool

PREHEAT QW-406

Preheat Temp. Min.:	50°F
Interpass Temp. Max.:	550°F
Interpass Temp. Min.:	50°F
Other:	Temperature monitored using tempilstiks

POSITIONS QW-405

Process:	F-3 SMAW	F-4 SMAW
Position:	3-G	3-G
Progression:	Vertical Up	Vertical Up
Other:	Not Applicable	Not Applicable

FILLER METALS QW-404

Process:	F-3 SMAW	F-4 SMAW
SFA Specification No.:	5.1	5.1
AWS Classification No.:	E6010	E7018-1
F-No.:	F-3	F-4
A-No.:	A-1	A-1
Size of Filler Metal:	1/8"	3/32"
Deposited Weld Metal:	0.124"	0.125"
Manufacturer:	Lincoln Electric	Air Liquide
Trade Name:	Fleetweld 5+	LA 18 PLUS
Heat Number:	Not Recorded	Not Recorded
Product Form:	Covered Electrode	Covered Electrode
Other:	Not Applicable	Not Applicable

SHIELDING GAS QW-408

Shielding Gas:	
Composition:	*(Not Applicable)*
Flow Rate:	

ELECTRICAL CHARACTERISTICS QW-409

Process:	F-3 SMAW	F-4 SMAW
Current:	Direct (DC)	Direct (DC)
Polarity:	Reverse (EP)	Reverse (EP)
Volts:	20 - 28	20 - 24
Amps:	50 - 70	60 - 75
Travel Speed (ipm):	2.8 - 4.9	2.3 - 4.6
Maximum Heat Input (J/in):	42 140	46 800
Tungsten Electrode:	Not Applicable	Not Applicable
STT Program Settings:	Not Applicable	Not Applicable
Other:	Not Applicable	Not Applicable

TECHNIQUE QW-410

String or Weave:	String	String & Weave
Oscillation:	Not Applicable	Not Applicable
Single / Multi Pass:	Multiple passes from one side.	
Single / Multi Electrodes:	Single	Single
Wire Stick Out:	Not Applicable	Not Applicable
Nozzle / Cup Size:	Not Applicable	Not Applicable

PROCEDURE QUALIFICATION RECORD (PQR) QW-483
(Section IX, ASME Boiler and Pressure Vessel Code)

PQR # 5B-102-3

Tensile Test
QW-462

Specimen No.	Width in	Thickness in	Area in^2	Ultimate Total Load Lb	Ultimate Unit Stress ksi	Type of Failure & Location
LZ-T1	0.746	0.264	0.197	13 646	69.5	Ductile - Base Metal
LZ-T2	0.751	0.257	0.193	13 120	68.0	Ductile - Base Metal

Guided Bend Tests
QW-462

Specimen No.	Type	Figure	Result
LZ-B1	TFB	QW-462.3(a)	Pass
LZ-B2	TRB	QW-462.3(a)	Pass
LZ-B3	TFB	QW-462.3(a)	Pass
LZ-B4	TRB	QW-462.3(a)	Pass

Toughness Tests
QW-170

Specimen No.	Notch Location	Notch Type	Qual. Temp	Impact Values (ft-lbs)	% Shear	Lateral Exp Inches	Drop Weight Break	Drop Weight No Brk
LZ-1	Weld	V-Notch	-50°F	61	60	0.051	N/A	N/A
LZ-2	Weld	V-Notch	-50°F	96	90	0.070	N/A	N/A
LZ-3	Weld	V-Notch	-50°F	87	70	0.073	N/A	N/A
LZ-4	HAZ	V-Notch	-50°F	137	100	0.085	N/A	N/A
LZ-5	HAZ	V-Notch	-50°F	141	100	0.090	N/A	N/A
LZ-6	HAZ	V-Notch	-50°F	148	100	0.101	N/A	N/A

Fillet-Weld Tests
Not Applicable

Result-Satisfactory: Yes _____ No _____ Pen. into Parent Material: Yes _____ No _____
Macro-Results:

Other Tests

Type of Test: Hardness Test - See Attached Report
Other:

Welder's Name: Craig Tupper Reg. No.: W-22902 Stamp ID: LZ
Tests Conducted By: Qualimet Lab. Test No.: 1111-10001

We certify that the statements in this record are correct and that the test welds were prepared, welded, and tested in accordance with the requirements of Section IX of the ASME Code.

Manufacturer: 5Blue Process Equipment Inc.
Date: August 17, 2010 Certified By: Kelly R. Smith, P.Eng

Qualimet

• 7817 CORONET ROAD, EDMONTON, AB T6E 4N7 • (780) 469-5870 • FAX (780) 465-5829
• CALGARY (403) 278-9862 • 1-800-621-8979 • www.qualimetinc.com

"Your source of Quality Materials Engineering"

MECHANICAL TEST REPORT

for Procedure Qualification Record # 5B-102-3

Client :	5Blue Process Equipment Inc.	**Job Number:**	1111-10001
Address:	2303 - 8th Street Nisku AB T9E 7Z1	**Date:**	August 17, 2010
Materials:	SA-516 Gr. 60/70		
Size:	0.249" Plate (machined)	**Condition:**	PWHT
Test Specification:		**ASME Section IX**	

Tensile Tests QW-462.1(a)

Sample Identification:	LZ-T1	LZ-T2
Sample Size - inch:(W x T)	0.746 x 0.264	0.751 x 0.257
Least X-Sect. Area - in^2:	0.197	0.193
Ultimate Load - lbs:	13 646	13 120
Ult. Ten. Strength - ksi:	69.5	68.0
Character of Failure:	Ductile	Ductile
Location of Failure:	Base Metal	Base Metal
Req'd Tensile Strength - ksi:	70.0	70.0
Pass or Fail:	Pass	Pass
Remarks:	Within 5% of min. tensile strength	Within 5% of min. tensile strength

Bend Tests QW-462.3(a)

Sample Identification:	LZ-B1	LZ-B2	LZ-B3	LZ-B4
***Type of Bend Test:**	TFB	TRB	TFB	TRB
Pass or Fail:	Pass	Pass	Pass	Pass
Remarks:	-----	-----	-----	-----

*Types of Bend Tests **TSB, TFB, TRB = transverse side, face or root bend** **LSB, LFB, LRB = longitudinal side, face or root bend**

We certify that the statements in this record are acceptable, in accordance with the requirements of ASME Section IX.

TEST RESULTS CERTIFIED BY:

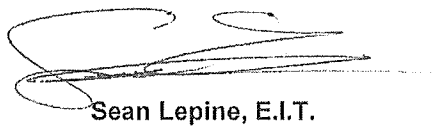

Sean Lepine, E.I.T.

Qualimet

Qualimet

• 7817 CORONET ROAD, EDMONTON, AB T6E 4N7 • (780) 469-5870 • FAX (780) 465-5829
• CALGARY (403) 278-9862 • 1-800-621-6979 • www.qualimetinc.com

"Your source of Quality Materials Engineering"

CHARPY IMPACT TEST REPORT

for Procedure Qualification Record # 5B-102-3

Client :	5Blue Process Equipment Inc.	**Job Number:**	1111-10001
Address:	2303 - 8th Street Nisku AB T9E 7Z1	**Date:**	August 17, 2010
Materials:	SA-516 Gr. 60/70		
Size:	0.249" Plate (machined)	**Condition:**	PWHT
Test Specification:	ASME Section IX, ASME Section VIII UG-84, ASTM A-370		

Specimen Type:	Charpy V-Notch
Qualification Temperature:	-50° F

Specimen Size (mm): 5.4

Sample Set	Sample Number	Actual Impact Energy (ft-lb)	Full Size ft-lb	Shear (%)	Lateral Expansion Inches
Weld	LZ-1	33	61	60	0.051
	LZ-2	52	96	90	0.070
	LZ-3	47	87	70	0.073
	Average:	**44**	**81**	**73**	**0.065**

We certify that the statements in this record are acceptable and that the specimen(s) were prepared and tested in accordance with the requirements of the current edition of ASME Section IX and the latest addenda.

TEST RESULTS CERTIFIED BY:

Qualimet

Sean Lepine, E.I.T.

Qualimet

• 7817 CORONET ROAD, EDMONTON, AB T6E 4N7 • (780) 469-5870 • FAX (780) 465-5829
• CALGARY (403) 278-9862 • 1-800-621-8979 • www.qualimetinc.com

"Your source of Quality Materials Engineering"

CHARPY IMPACT TEST REPORT

for Procedure Qualification Record # 5B-102-3

Client :	5Blue Process Equipment Inc.	**Job Number:**	1111-10001
Address:	2303 - 8th Street Nisku AB T9E 7Z1	**Date:**	August 17, 2010
Materials:	SA-516 Gr. 60/70		
Size:	0.249" Plate (machined)	**Condition:**	PWHT
Test Specification:	ASME Section IX, ASME Section VIII UG-84, ASTM A-370		

Specimen Type:	Charpy V-Notch
Qualification Temperature:	-50° F

Specimen Size (mm): 5.4

Sample Set	Sample Number	Actual Impact Energy (ft-lb)	Full Size ft-lb	Shear (%)	Lateral Expansion Inches
HAZ	LZ-4	74	137	100	0.085
	LZ-5	76	141	100	0.090
	LZ-6	80	148	100	0.101
	Average:	**77**	**142**	**100**	**0.092**

We certify that the statements in this record are acceptable and that the specimen(s) were prepared and tested in accordance with the requirements of the current edition of ASME Section IX and the latest addenda.

TEST RESULTS CERTIFIED BY:

Qualimet

Sean Lepine, E.I.T.

Qualimet

• 7817 CORONET ROAD, EDMONTON, AB T6E 4N7 • (780) 469-5870 • FAX (780) 465-5829
• CALGARY (403) 278-9862 • 1-800-621-8979 • www.qualimetinc.com

"Your source of Quality Materials Engineering"

HARDNESS TEST REPORT

for Procedure Qualification Record # 5B-102-3

Client :	5Blue Process Equipment Inc.	**Job Number:**	1111-10001
Address:	2303 - 8th Street Nisku AB T9E 7Z1	**Date:**	August 17, 2010
Materials:	SA-516 Gr. 60/70		
Size:	0.249" Plate (machined)	**Condition:**	PWHT
Test Specification:	NACE RP-0472		

Test Method:	Hardness testing performed in accordance with ASTM E-92 (Vickers Hardness of Metallic Materials) using a Vickers tester with a 1 kg load

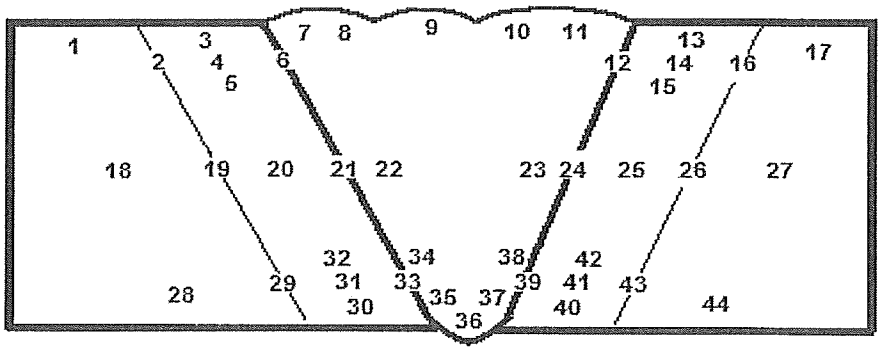

Vickers Hardness Values

1	160	**10**	194	**19**	154	**28**	151	**37**	157
2	156	**11**	204	**20**	174	**29**	153	**38**	164
3	165	**12**	175	**21**	176	**30**	162	**39**	159
4	169	**13**	196	**22**	180	**31**	142	**40**	156
5	175	**14**	187	**23**	170	**32**	154	**41**	163
6	189	**15**	184	**24**	140	**33**	162	**42**	164
7	208	**16**	152	**25**	163	**34**	153	**43**	154
8	189	**17**	146	**26**	150	**35**	156	**44**	159
9	192	**18**	150	**27**	154	**36**	159		

We certify that the statements in this record are acceptable, in accordance with the requirements of NACE RP 0472. RP 0472-2005 paragraph 5.3 states "The maximum allowable HAZ hardness shall be 248 HV the maximum weld deposit hardness should be 248 HV and the average weld deposit hardness should not exceed 210 HV"

TEST RESULTS CERTIFIED BY:

Qualimet

Sean Lepine, E.I.T.

PROCEDURE QUALIFICATION RECORD (PQR) QW-483

(Section IX, ASME Boiler and Pressure Vessel Code)

Company Name:	5Blue Process Equipment Inc.	**By:**	Kelly R. Smith, P.Eng
PQR No.:	5B-102-4	**Date:**	August 17, 2010
Revision No.:	0	**Revision Date:**	-----
WPS No.:	5B-102 AW / PWHT		
Welding Process(es):	GMAW (SC) / SMAW / SMAW	**Types:**	Semi-Automatic / Manual / Manual

JOINTS QW-402

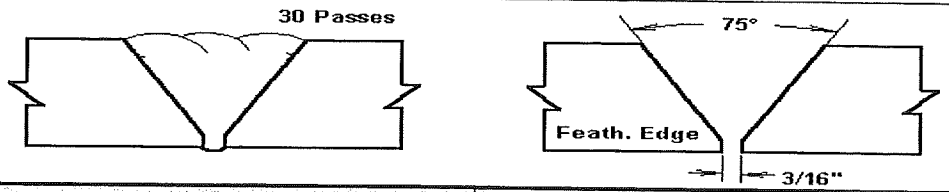

BASE METALS QW-403

Material Spec.:	SA-516		SA-516
Grade/Type/Class:	Gr. 60/70		Gr. 60/70
P-No. Group No.:	P-1 Group 1/2	to	P-1 Group 1/2
Heat No.:	335169-83718		335169-83718
Carbon Equivalent (CE):	0.39		0.39
Thickness & Diameter:	1.750" Plate		

POSTWELD HEAT TREATMENT QW-407

Temperature:	1150°F ± 25°F
Time:	9 hours soak at temperature
Heating:	Ambient to 800°F @ moderate rate, 800°F to 1150°F @ 228°F/hr max
Cooling:	1150°F to 800°F @ 285°F/hr max, 800°F to ambient @ still air cool

PREHEAT QW-406

Preheat Temp. Min.:	50°F
Interpass Temp. Max.:	550°F
Interpass Temp. Min.:	50°F
Other:	Temperature monitored using tempilstiks

POSITIONS QW-405

Process:	F-6 GMAW	F-3 SMAW	F-4 SMAW
Position:	3-G	3-G	3-G
Progression:	Vertical Down	Vertical Up	Vertical Up
Other:	Not Applicable	Not Applicable	Not Applicable

FILLER METALS QW-404

Process:	F-6 GMAW (SC)	F-3 SMAW	F-4 SMAW
SFA Specification No.:	5.18	5.1	5.1
AWS Classification No.:	ER70S-6	E6010	E7018-1
F-No.:	F-6	F-3	F-4
A-No.:	A-1	A-1	A-1
Size of Filler Metal:	0.035"	1/8"	3/32", 1/8"
Deposited Weld Metal:	0.125	0.125"	1.500"
Manufacturer:	Lincoln Electric	Lincoln Electric	Air Liquide
Trade Name:	SuperArc L-56	Fleetweld 5+	LA 18 PLUS
Heat Number:	V06G2129F9	Not Recorded	Not Recorded
Product Form:	Coiled Solid Wire	Covered Electrode	Covered Electrode
Other:	Not Applicable	Not Applicable	Not Applicable

SHIELDING GAS QW-408

Shielding Gas:	SFA 5.32, SG-AC-25		
Composition:	75% Argon, 25% CO_2		
Flow Rate:	30 c.f.h.	*(Not Applicable)*	*(Not Applicable)*
Backing Gas:	None		
Backing Rate:	Not Applicable		

ELECTRICAL CHARACTERISTICS QW-409

Process:	F-6 GMAW (SC)	F-3 SMAW	F-4 SMAW
Current:	Direct (DC)	Direct (DC)	Direct (DC)
Polarity:	Reverse (EP)	Reverse (EP)	Reverse (EP)
Volts:	16 - 19	25 - 30	20 - 25
Amps:	65 - 100	65 - 85	90 - 135
Travel Speed (ipm):	3.2 - 4.5	3.0 - 4.3	2.5 - 8.8
Maximum Heat Input (J/in):	47 940	51 000	74 250
Mode of Metal Transfer:	Short Circuit	Not Applicable	Not Applicable
Tungsten Electrode:	Not Applicable	Not Applicable	Not Applicable
Wirefeed Speed (ipm)::	124	Not Applicable	Not Applicable

TECHNIQUE QW-410

String or Weave:	String	String & Weave	String & Weave
Oscillation:	Not Applicable	Not Applicable	Not Applicable
Single / Multi Pass:	Multiple passes from one side		
Single / Multi Electrodes:	Single	Single	Single
Wire Stick Out:	1/2"	Not Applicable	Not Applicable
Nozzle / Cup Size:	3/8" (#6)	Not Applicable	Not Applicable

PROCEDURE QUALIFICATION RECORD (PQR) QW-483
(Section IX, ASME Boiler and Pressure Vessel Code)

PQR # 5B-102-4

Tensile Test
QW-462

Specimen No.	Width in	Thickness in	Area in^2	Ultimate Total Load Lb	Ultimate Unit Stress ksi	Type of Failure & Location
MA-T1	0.758	1.435	1.088	78 360	72.0	Ductile - Base Metal
MA-T2	0.755	1.472	1.111	80 809	72.5	Ductile - Base Metal

Guided Bend Tests
QW-462

Specimen No.	Type	Figure	Result
MA-B1	TSB	QW-462.2	Pass
MA-B2	TSB	QW-462.2	Pass
MA-B3	TSB	QW-462.2	Pass
MA-B4	TSB	QW-462.2	Pass

Toughness Tests
QW-170

Specimen No.	Notch Location	Notch Type	Qual. Temp	Impact Values (ft-lbs)	% Shear	Lateral Exp Inches	Drop Weight Break	Drop Weight No Brk
MA-1	Weld - Cap	V-Notch	-50°F	23	30	0.025	N/A	N/A
MA-2	Weld - Cap	V-Notch	-50°F	112	70	0.084	N/A	N/A
MA-3	Weld - Cap	V-Notch	-50°F	84	50	0.072	N/A	N/A
MA-4	Weld - Root	V-Notch	-50°F	80	60	0.068	N/A	N/A
MA-5	Weld - Root	V-Notch	-50°F	33	40	0.028	N/A	N/A
MA-6	Weld - Root	V-Notch	-50°F	43	40	0.033	N/A	N/A
MA-7	HAZ	V-Notch	-50°F	137	70	0.093	N/A	N/A
MA-8	HAZ	V-Notch	-50°F	147	80	0.085	N/A	N/A
MA-9	HAZ	V-Notch	-50°F	137	70	0.086	N/A	N/A

Fillet-Weld Tests
Not Applicable

Result-Satisfactory: Yes _____ No _____ Pen. into Parent Material: Yes _____ No _____
Macro-Results:

Other Tests

Type of Test: Hardness Testing - See Attached Report
Other:

Welder's Name: Craig Tupper Reg. No.: W-22902 Stamp ID: MA
Tests Conducted By: Qualimet Lab. Test No.: 1111-10005

We certify that the statements in this record are correct and that the test welds were prepared, welded, and tested in accordance with the requirements of Section IX of the ASME Code.

Manufacturer: 5Blue Process Equipment Inc.
Date: August 17, 2010 Certified By: Kelly R. Smith, P.Eng

Qualimet

• 7817 CORONET ROAD, EDMONTON, AB T6E 4N7 • (780) 469-5870 • FAX (780) 465-5829
• CALGARY (403) 278-9862 • 1-800-621-8979 • www.qualimetinc.com

"Your source of Quality Materials Engineering"

MECHANICAL TEST REPORT

for Procedure Qualification Record # 5B-102-4

Client :	5Blue Process Equipment Inc.	**Job Number:**	1111-10001
Address:	2303 - 8th Street Nisku AB T9E 7Z1	**Date:**	August 17, 2010
Materials:	SA-516 Gr. 60/70		
Size:	1.750" Plate	**Condition:**	PWHT
Test Specification:	**ASME Section IX**		

Tensile Tests QW-462.1(a)

Sample Identification:	MA-T1	MA-T2
Sample Size - inch:(W x T)	0.758 x 1.435	0.755 x 1.472
Least X-Sect. Area - in^2:	1.088	1.111
Ultimate Load - lbs:	78 360	80 809
Ult. Ten. Strength - ksi:	72.0	72.5
Character of Failure:	Ductile	Ductile
Location of Failure:	Base Metal	Base Metal
Req'd Tensile Strength - ksi:	70.0	70.0
Pass or Fail:	Pass	Pass
Remarks:	-----	-----

Bend Tests QW-462.2

Sample Identification:	MA-B1	MA-B2	MA-B3	MA-B4
***Type of Bend Test:**	TSB	TSB	TSB	TSB
Pass or Fail:	Pass	Pass	Pass	Pass
Remarks:	-----	-----	-----	-----

*Types of Bend Tests **TSB, TFB, TRB = transverse side, face or root bend** **LSB, LFB, LRB = longitudinal side, face or root bend**

We certify that the statements in this record are acceptable, in accordance with the requirements of ASME Section IX.

TEST RESULTS CERTIFIED BY:

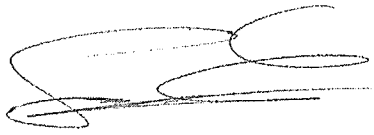

Qualimet

Sean Lepine, E.I.T.

Qualimet

• 7817 CORONET ROAD, EDMONTON, AB T6E 4N7 • (780) 469-5870 • FAX (780) 465-5829
• CALGARY (403) 278-9862 • 1-800-621-8979 • www.qualimetinc.com

"Your source of Quality Materials Engineering"

CHARPY IMPACT TEST REPORT

for Procedure Qualification Record # 5B-102-4

Client :	5Blue Process Equipment Inc.	**Job Number:**	1111-10001
Address:	2303 - 8th Street Nisku AB T9E 7Z1	**Date:**	August 17, 2010
Materials:	SA-516 Gr. 60/70		
Size:	1.750" Plate	**Condition:**	PWHT
Test Specification:	ASME Section IX, ASME Section VIII UG-84, ASTM A-370		

Specimen Type:	Charpy V-Notch
Qualification Temperature:	-50° F

Specimen Size (mm): 10

Sample Set	Sample Number	Actual Impact Energy (ft-lb)	Full Size ft-lb	Shear (%)	Lateral Expansion Inches
Weld - Cap	MA-1	23	23	30	0.025
	MA-2	112	112	70	0.084
	MA-3	84	84	50	0.072
	Average:	**73**	**73**	**50**	**0.060**

We certify that the statements in this record are acceptable and that the specimen(s) were prepared and tested in accordance with the requirements of the current edition of ASME Section IX and the latest addenda.

TEST RESULTS CERTIFIED BY:

Qualimet

Sean Lepine, E.I.T.

Qualimet

• 7817 CORONET ROAD, EDMONTON, AB T6E 4N7 • (780) 469-5870 • FAX (780) 465-5829
• CALGARY (403) 278-9862 • 1-800-621-8979 • www.qualimetinc.com

"Your source of Quality Materials Engineering"

CHARPY IMPACT TEST REPORT

for Procedure Qualification Record # 5B-102-4

Client :	5Blue Process Equipment Inc.	**Job Number:**	1111-10001
Address:	2303 - 8th Street Nisku AB T9E 7Z1	**Date:**	August 17, 2010
Materials:	SA-516 Gr. 60/70		
Size:	1.750" Plate	**Condition:**	PWHT
Test Specification:	ASME Section IX, ASME Section VIII UG-84, ASTM A-370		

Specimen Type:	Charpy V-Notch
Qualification Temperature:	-50° F

Specimen Size (mm): 10

Sample Set	Sample Number	Actual Impact Energy (ft-lb)	Full Size ft-lb	Shear (%)	Lateral Expansion Inches
Weld - Root	MA-4	80	80	60	0.068
	MA-5	33	33	40	0.028
	MA-6	43	43	40	0.033
	Average:	**52**	**52**	**47**	**0.043**

We certify that the statements in this record are acceptable and that the specimen(s) were prepared and tested in accordance with the requirements of the current edition of ASME Section IX and the latest addenda.

TEST RESULTS CERTIFIED BY:

Qualimet

Sean Lepine, E.I.T.

Qualimet

• 7817 CORONET ROAD, EDMONTON, AB T6E 4N7 • (780) 469-5870 • FAX (780) 465-5829
• CALGARY (403) 278-9862 • 1-800-621-8979 • www.qualimetinc.com

"Your source of Quality Materials Engineering"

CHARPY IMPACT TEST REPORT

for Procedure Qualification Record # 5B-102-4

Client :	5Blue Process Equipment Inc.	**Job Number:**	1111-10001
Address:	2303 - 8th Street Nisku AB T9E 7Z1	**Date:**	August 17, 2010
Materials:	SA-516 Gr. 60/70		
Size:	1.750" Plate	**Condition:**	PWHT
Test Specification:	ASME Section IX, ASME Section VIII UG-84, ASTM A-370		

Specimen Type:	Charpy V-Notch
Qualification Temperature:	-50° F

Specimen Size (mm): 10

Sample Set	Sample Number	Actual Impact Energy (ft-lb)	Full Size ft-lb	Shear (%)	Lateral Expansion Inches
HAZ	MA-7	137	137	70	0.093
	MA-8	147	147	80	0.085
	MA-9	137	137	70	0.086
	Average:	**140**	**140**	**73**	**0.088**

We certify that the statements in this record are acceptable and that the specimen(s) were prepared and tested in accordance with the requirements of the current edition of ASME Section IX and the latest addenda.

TEST RESULTS CERTIFIED BY:

Qualimet

Sean Lepine, E.I.T.

Qualimet

• 7817 CORONET ROAD, EDMONTON, AB T6E 4N7 • (780) 469-5870 • FAX (780) 465-5829
• CALGARY (403) 278-9862 • 1-800-621-8979 • www.qualimetinc.com

"Your source of Quality Materials Engineering"

HARDNESS TEST REPORT

for Procedure Qualification Record # 5B-102-4

Client :	5Blue Process Equipment Inc.	**Job Number:**	1111-10001
Address:	2303 - 8th Street Nisku AB T9E 7Z1	**Date:**	August 17, 2010
Materials:	SA-516 Gr. 60/70		
Size:	1.750" Plate	**Condition:**	PWHT
Test Specification:	NACE RP-0472		

Test Method:	Hardness testing performed in accordance with ASTM E-92 (Vickers Hardness of Metallic Materials) using a Vickers tester with a 1 kg load

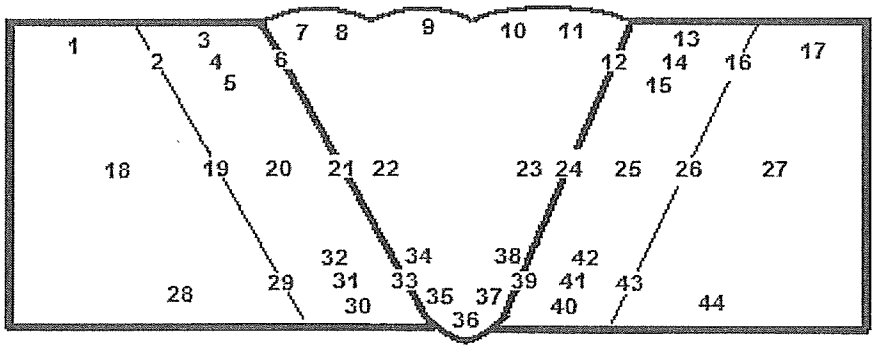

Vickers Hardness Values

1	136	**10**	187	**19**	163	**28**	140	**37**	156
2	144	**11**	204	**20**	156	**29**	149	**38**	158
3	168	**12**	178	**21**	163	**30**	149	**39**	156
4	174	**13**	186	**22**	192	**31**	159	**40**	167
5	163	**14**	180	**23**	197	**32**	170	**41**	184
6	186	**15**	165	**24**	213	**33**	148	**42**	159
7	190	**16**	167	**25**	188	**34**	155	**43**	158
8	202	**17**	137	**26**	154	**35**	150	**44**	142
9	178	**18**	136	**27**	136	**36**	149		

We certify that the statements in this record are acceptable, in accordance with the requirements of NACE RP 0472. RP 0472-2005 paragraph 5.3 states "The maximum allowable HAZ hardness shall be 248 HV the maximum weld deposit hardness should be 248 HV and the average weld deposit hardness should not exceed 210 HV"

TEST RESULTS CERTIFIED BY:

Qualimet

Sean Lepine, E.I.T.

ABSA
the pressure equipment safety authority

FEB 2 0 2014
QC Copy
COPY

9410 - 20 Ave N.W.
Edmonton, Alberta, Canada T6N 0A4
Tel: (780) 437-9100 / Fax: (780) 437-7787

February 18, 2014

Attention: Rick Crook
5BLUE PROCESS EQUIPMENT INC
2303 8 STREET
NISKU, AB

FEB 2 0 2014
Received by Document Control

The welding procedure, tracking number 2014-01012, originally received on February 06, 2014 was surveyed and accepted for registration as follows:

Reg. No. : WP-3146.2 **Accepted on:** February 13, 2014
Reg Type: Revision To accepted Design
Spec. No. : 5B-103 AW/PWHT REV 1

An invoice covering survey and registration fees will be forwarded from our Revenue Accounts.

Enclosed is a stamped welding procedure for your reference.

Please note the acceptance of this registration does not allow the use of this welding procedure in the construction, modification, on any boiler, pressure vessel, pressure piping system or fitting in Alberta unless the contractor/manufacturer has registered a Quality Control System for such work with ABSA.

Sincerely,

R. Roseberg

ROSEBERG, BOB, P. Eng.

WPS Number:	5B-103 AW / PWHT
PQR Number:	5B-103-1, 5B-102-2, 5B-102-3, 5B-102-4, 5B-103-2

QUALIFIED FOR

Material P Number:	P1 Group 1 or 2
Material Type (typical):	SA-516 Grade 70, SA-106 Grade B, SA-360 Grade LF2, etc.
Process:	GMAW / SMAW
Position:	All Positions
Diameter:	All Diameters
Joint Design:	Grooves, Fillet, Weld Buildup
AWS Classification:	ER70S-6, E7018-1

[1] Limited to ER70S-6 for application where proven notch toughness properties are required.

Thickness:	0.125" to 1.388"	As Welded with CVN
	0.125" to 8.000"	PWHT with CVN

ABSA

SAFETY CODES ACT - PROVINCE OF ALBERTA

WELDING PROCEDURE

Reg. No. WP 3146.2

Spec. No. 5B-103 AW/PWHT (REV)

Weld Process GMAW / SMAW

Matl. Gr. P No. 1 Gr 1+2 to P No. 1 Gr 1+2

Elec. Gr. F No. 6+4 A No. 1

Th. Qual. For, P.W.H.T. YES/NO

3.2 to 38mm (AW) CVN -46°C

3.2 to 203mm (PWHT) CVN -46°C

Yr. 14 Mo. 2 Day 12 Signed

R. ROSEBERG, P.ENG.
WELDING SPECIALIST

2010 SECTION IX

QW-482 WELDING PROCEDURE SPECIFICATIONS (WPS)
(See QW-200.1, Section IX, ASME Boiler and Pressure Vessel Code)

Company Name:	5Blue Process Equipment Inc.	**By:**	Kelly R. Smith
Welding Procedure Specification No.:	5B-103 AW / PWHT	**0**	August 17, 2010
Supporting PQR No.(s):	5B-103-1, 5B-102-2, 5B-102-3, 5B-102-4		
Revision No.:	1	**Date:**	January 22, 2014
Welding Process(es):	GWAW / SMAW	**Type(s):**	Semi-Automatic / Manual

Revision 1: Editorial update and add PQR 5B-103-2

(Automatic, Manual, Machine or Semi-Automatic)

JOINTS (QC-402)

Joint Design: All Groove and Fillets

Root Spacing: 0" to 1/4"

Backing: **Yes** ☒ **No** ☐

GMAW/SMAW

Backing Material (Type): F-6/F-4 GMAW Weld Metal

No Retainers

(refer to both backing and retainers)

☒ Metal ☐ Non-Fusing Metal

☐ Non-Metallic ☐ Other

Sketches, Production Drawings, Weld Symbols, or Written Description should show the general arrangement of the parts to be welded. Where applicable, the details of the weld groove may be specified.

(At the option of the manufacturer, sketches may be attached to illustrate joint design, weld layers, and bead sequence (e.g. for notch toughness procedures, for multiple process procedures, etc.))

See Attached

BASE METALS (QW-403)

P-No.:	P-1	**Group No.:**	1 or 2	to **P-No.:**	P-1	**Group No.:**	1 or 2

Thickness Range:

Base Metal: **Groove** 0.125" to 1.388" - As Welded; 0.125" to 8.000" - PWHT **Fillet** All

Maximum Pass Thickness ≤ 0.500 inch (13 mm): **Yes** ☒ **No** ☐

Other: Limited to Group 1 or 2 when proven notch toughness properties are required.

FILLER DETAILS (QW-404)			
	1 – GMAW (SC)	**2 – SMAW**	**3**
Spec. No. (SFA):	5.18	5.1	
AWS No. (Class):	ER70S-6	E7018-1	
F-No.:	F-6	F-4	
A-No.:	A-1	A-1	
Size of Filler Metals:	0.035", 0.045", 0.062"	3/32", 1/8", 5/32", 3/16, 1/4"	
Filler Metal Product Form:	Solid Wire	Coated Electrode	
Supplemental Filler Metal:	None	None	
Thickness Range:			
o Groove	0.138"	1.25" AW, 8" PWHT	
o Fillet	All	All	
Electrode-Flux (Class):	N/A	N/A	
Flux Type:	N/A	N/A	
Flux Trade Name:	N/A	N/A	
Consumable Insert:	N/A	N/A	
Other:	ER70S-6 wire must meet A-1 chemical composition (Mn ≤ 1.60% and Si ≤ 1.00%)		

POSITIONS (QW-405)				
Position(s) of Groove:	All			
Welding Progression:	**Up**	F-4 SMAW	**Down**	F-6 GMAW
Position(s) of Fillet:	All			
Other:	N/A			

PREHEAT (QW-406)			
Preheat Temperature:	**Minimum**	50° F	See Attached Chart
Inter-pass Temperature:	**Maximum**	550° F	See Attached Chart
Preheat Maintenance:	Continuous Welding and Reheating		
Other:			
(Continuous or special heating, where applicable, should be recorded)			

POSTWELD HEAT TREATMENT (QW-407)	
Temperature Range:	See Attached
Time Range:	See Attached
Other:	Maximum PWHT time is 11.25 hours

GAS (QW-408)

Gas(es)		Percent Composition (Mixture)	Flow Rate
Shielding:	SFA 5.32; SG-AC-25	75% Argon, 25% CO_2	10 – 50 scfh
Trailing:	N/A		
Backing:	N/A		
Other:			

ELECTRICAL CHARACTERISTICS (QW-410)

		Filler Metal		Current					
Weld Layers	Process	Class	Diameter (in)	Type Polarity	Amp. (Range)	Volt (Range)	Wire Feed Speed Range (imp)	Travel Speed (ipm)	Other "*"
1	GMAW	ER70S-6	0.035	DC EP	70 – 200	14 – 26		1 – 14	
1	GMAW	ER70S-6	0.045	DC EP	70 – 200	14 – 26		1 – 14	
1	GMAW	ER70S-6	0.062	DC EP	70 – 200	14 – 26		1 – 14	
Rem	SMAW	E7018-1	3/32	DC EP	45 – 130	18 – 28		1 - 14	
Rem	SMAW	E7018-1	1/8	DC EP	60 – 180	18 – 30		2 - 16	
Rem	SMAW	E7018-1	5/32	DC EP	90 - 230	20 - 32		3 - 18	
Rem	SMAW	E7018-1	3/16	DC EP	130 – 290	20 – 34		4 – 19	
Rem	SMAW	E7018-1	¼	DC EP	180 – 360	22 – 34		4 – 20	

Note: Number of weld layers and size of filler metal may vary with thickness of base material and position of weld.
1/4" E7018-1 electrodes are limited to flat (1G) position only.

"*" *Minimum Travel Speed at Maximum Amps and Volts for Impact Requirements*

Heat Input = $\frac{\text{Amps x Volts x 60}}{\text{Travel Speed (ipm)}}$

Amps and volts, or power or energy range, should be recorded for each electrode size, position and thickness, etc.			
Pulsing Current:	Direct	Heat Input (Max)	See Below
Tungsten Electrode Size and Type:		N/A	
		(Pure Tungsten, 2% Thoriated, etc.)	
Mode of Metal Transfer for GMAW (FCAW):		Short Circuiting Arc	
		(Spray Arc, Short Circuiting Arc, etc.)	
Other:		N/A	

Base Metal Thickness Range	Heat Input – Joules/Inch	
	GMAW	SMAW
As Welded:		
0.125" – 0.625"	20 267	59 500
0.625" – 1.500"	20 267	74 750
PWHT:		
0.625" – 8.000"	47 940	74 250

TECHNIQUE (QW-410)	
String or Weave Bead:	String and Weave
Orifice, Nozzle or Gas Cup Size:	N/A
Initial and Inter-pass Cleaning (Brushing, Grinding, etc.):	Brushing, Chipping, Grinding
Method of Back Gouging:	Air Carbon Arc and Grinding
Oscillation:	N/A
Contact Tube to Work Distance:	N/A
Multiple or Single Pass (Per Side):	Single or Multiple (Multiple only when proven notch toughness is required).
Multiple or Single Electrodes:	Single
Electrode Spacing:	N/A
Peening:	N/A
Other:	N/A

PREHEAT AND POST WELD HEAT TREATMENT

AS WELDED: PREHEAT & INTERPASS TEMPERATURE MINIMUM AND MAXIMUM		
Section	**1:**	50° F minimum for all P1 materials except as listed below:
		o 200° F if the joint thickness exceeds 1.00" and the specified carbon exceeds 0.30%
	VIII:	50° F minimum for all P1 materials except as listed below:
		o 200° F if the joint thickness exceeds 1.00"
	B31.1:	50° F minimum for all P1 materials except as listed below:
		o 175° F, if the joint thickness exceeds 1.00" and the specified carbon content exceeds 0.30%
	B31.3:	50° F minimum for all P1 materials except as listed below:
		o 175° F, if the specified minimum tensile strength of the base material exceeds 71 ksi
		o 175° F. if the nominal wall thickness exceeds 1"
		o

POST WELD HEAT TREATMENT		
Section	**1/VIII:**	1100° F minimum holding temperature:
		o Up to 2" wt; 1 hour per inch nominal wall thickness, 15 minutes minimum holding time
		o Over 2" wt; 2 hours plus 15 minutes for each additional inch over 2"
	B31.1:	1100° F to 1200° F holding temperature range:
		o Up to 2" wt; 1 hour per inch nominal wall thickness, 15 minutes minimum holding time
		o Over 2" wt; 2 hours plus 15 minutes for each additional inch over 2"
	B31.3:	1100° F to 1200° F holding temperature range:
		o 1 hour per inch nominal wall thickness, 1 hour minimum holding time
Max. Interpass Temp.:		o 11 hours 15 minutes for applications where proven notch toughness is required,

Reference to relevant construction codes is mandatory prior to production welding to determine any supplementary restrictions.

QW-483 PROCEDURE QUALIFICATION RECORDS (PQR)

(See QW-200.2, Section IX, ASME Boiler and Pressure Vessel Code)

Record Actual Variables Used to Weld Test Coupon

Company Name:	5Blue Process Equipment Inc.		
Procedure Qualification Record No.:	5B-103-1	**Date:**	August 17, 2010
WPS No.:	5B-103 AW / PWHT		
Welding Process(es):	GMAW (SC) / SMAW		
Types (Manual, Automatic, Semi-Automatic):	Semi-Automatic / Manual		

Joints (QW-420)

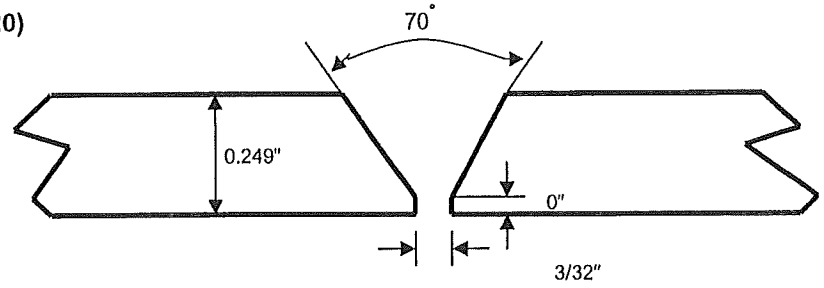

Groove Design of Test Coupon

(For combination qualifications, the deposited weld metal thickness shall be recorded for each filler metal and process used.)

BASE METALS (QW-403)						
Material Spec.:	SA-516					
Type/Grade, or UNS Number:	Grade 60/70, Dual Rated Plate					
P-No.:	P-1	**Group No.:**	1 and 2	to **P-No.:**	P-1	**Group No.:** 1 and 2
Thickness of Test Coupon:	0.249" Plate (machined)					
Diameter of Test Coupon:	N/A					
Maximum Pass Thickness:	0.125"					
Heat No.:	49074-04703					
Other: Carbon Equivalent	0.38					

FILLER METALS (QW-404)			
	F-6– GMAW (SC)	F-4 – SMAW	
SFA Specification:	5.18	5.1	
AWS Classification:	ER70S-6	E7018-1	
Filler Metal F-No.:	F-6	F-4	
Weld Metal Analysis A-No.:	A-1	A-1	
Size of Filler Metal:	0.035"	1/8"	
Deposited Weld Metal Thickness	0.125"	0.124"	
Supplemental Filler Metal:	None	None	
Manufacturer:	Lincoln Electric	Air Liquide	
Trade Name:	SuperArc L-56	LA 18 PLUS	
Heat Number:	V066G2129F9	Not Recorded	
Filler Metal Product Form:	Coiled Solid Wire	Coated Electrode	
Other:			

POSITIONS (QW-405)		
	F-6 GMAW (SC)	F-4 SMAW
Position of Groove:	3-G	3-G
Welding Progression (Uphill, Downhill):	Vertical Down	Vertical Up
Other:	N/A	N/A

PREHEAT (QW-406)	
Preheat Temperature:	50° F
Inter-pass Temperature:	550° F Maximum
Other:	N/A

POSTWELD HEAT TREATMENT (QW-407)	
Temperature:	N/A
Time:	N/A
Other:	N/A

GAS (QW-408)			
	Gas(es)	Percent Composition (Mixture)	Flow Rate
Shielding:	SFA 5.32; SG-AC-25	75% Argon, 25% CO_2	30 cfh
Trailing:	N/A		
Backing:	N/A		
Other:	N/A		

ELECTRICAL CHARACTERISTICS (QW-409)		
	GMAW	SMAW
Current:	Direct (DC)	Direct (DC)
Polarity:	Reverse (EP)	Reverse (EP)
Volts:	16 – 19	20 – 25
Amps:	90 – 100	75 – 85
Tungsten Electrode Size:	N/A	N/A
Mode of Metal Transfer:	Short Circuit	N/A
Heat Input (Joules/Inch):	20 267	59 500
Wire Feed Speed (ipm):	N/A	N/A

TECHNIQUE (QW-410)		
	GMAW	F-4 SMAW
Travel Speed (ipm):	5.6 – 6.8	2.1 – 5.1
String or Weave Bead:	String	String and Weave
Oscillation:	N/A	N/A
Multi-pass or Single Pass (Per Side):	Multiple	Multiple
Single or Multiple Electrodes:	Single	Single
Wire Stick Out:	N/A	N/A
Nozzle / Cup Size:	N/A	N/A

QW-483 (Back)
TENSILE TEST (QW-150)

Specimen No (In.)	Width (In.)	Thickness (In.)	Area ($In.^2$)	Ultimate Total Load (lbs.)	Ultimate Unit Stress, (psi)	Type of Failure and Location

GUIDED-BEND TESTS (QW-160)	
TYPE and FIGURE NO.	RESULT

TOUGHNESS TESTS (QW-170)

Specimen No.	Notch Location	Specimen Size (mm)	Test Temperature	Impact Values			Drop Weight Break (Y/N)
				Ft-lb or J	% Shear	Mils (in.)	
LW-1	Weld	5.5 x 10	- 50° F	29	60	0.056	
LW-2	Weld	5.5 x 10	- 50° F	31	60	0.062	
LW-3	Weld	5.5 x 10	- 50° F	29	40	0.051	
LW-4	HAZ	5.5 x 10	- 50° F	18	40	0.044	
LW-5	HAZ	5.5 X 10	- 50° F	18	40	0.044	
LW-6	HAZ	5.5 x 10	- 50° F	16	30	0.022	

Comments:

FILLET-WELD TEST (QW-180)

Result – Satisfactory: Yes N/A No N/A **Penetration into Parent Metal:** Yes N/A No N/A

Macro – Results: N/A

Other Tests

Type of Test:

Deposit Analysis:

Other: N/A

Welder's Name: Craig Tupper **Clock:** W-22902 **Stamp No.:** "LW"

Tests Conducted By: Qualimet **Laboratory Test No.:** 1111-10001

We re-certify that the statements in this record, as revised, are correct and that the test welds were prepared, welded and tested in accordance with Section IX of the ASME Boiler and Pressure Vessel Code.

Manufacturer or Contractor: 5Blue Process Equipment Inc.

Date: January 22, 2014 **Certified By:** Joelle Dery-Brochu

7817 GOROHEL ROAD, EDMONTON, AB T6E 3N7 • (780) 469-5870 • FAX (780) 469-5839
• CALGARY (403) 276-9562 • 1-800-421-6978 • www.qualimetinc.com
Our mates of Quality Materials Engineering

CHARPY IMPACT TEST REPORT

for Procedure Qualification Record # 5B-103-1

Client :	5Blue Process Equipment Inc.	Job Number:	1111-10001
Address:	2303 - 8th Street Nisku AB T9E 7Z1	Date:	August 17, 2010
Materials:	SA-516 Gr. 60/70		
Size:	0.249" Plate (machined)	Condition:	As Welded
Test Specification:	ASME Section IX, ASME Section VIII UG-84, ASTM A-370		

Specimen Type:	Charpy V-Notch
Qualification Temperature:	-50° F

Specimen Size (mm): 5.5

Sample Set	Sample Number	Actual Impact Energy (ft-lb)	Full Size ft-lb	Shear (%)	Lateral Expansion Inches
Weld	LW-1	29	53	60	0.056
	LW-2	31	56	60	0.062
	LW-3	29	53	40	0.051
	Average:	30	54	53	0.056

We certify that the statements in this record are acceptable and that the specimen(s) were prepared and tested in accordance with the requirements of the current edition of ASME Section IX and the latest addenda.

TEST RESULTS CERTIFIED BY: Qualimet

Sean Lepine, E.I.T.

CIL # 20419-104-CS-01

7217 COPPINET ROAD, EDMONTON AB T5E 4B7 • (780) 469-5870 • FAX (780) 469-5824
• CALGARY (403) 279-6882 • 1-800-621-8979 • www.qualimetinc.com
"Your source of Quality Materials Engineering"

CHARPY IMPACT TEST REPORT

for Procedure Qualification Record # 5B-103-1

Client :	5Blue Process Equipment Inc.	Job Number:	1111-10001
Address:	2303 - 8th Street Nisku AB T9E 7Z1	Date:	August 17, 2010
Materials:	SA-516 Gr. 60/70		
Size:	0.249" Plate (machined)	Condition:	As Welded
Test Specification:	ASME Section IX, ASME Section VIII UG-84, ASTM A-370		

Specimen Type:	Charpy V-Notch
Qualification Temperature:	-50° F

Specimen Size (mm): 5.5

Sample Set	Sample Number	Actual Impact Energy (ft-lb)	Full Size ft-lb	Shear (%)	Lateral Expansion Inches
HAZ	LW-4	18	33	40	0.044
	LW-5	18	33	40	0.044
	LW-6	16	29	30	0.022
	Average:	17	32	37	0.037

We certify that the statements in this record are acceptable and that the specimen(s) were prepared and tested in accordance with the requirements of the current edition of ASME Section IX and the latest addenda.

TEST RESULTS CERTIFIED BY:

Sean Lepine, E.I.T.

Qualimet

QW-483 PROCEDURE QUALIFICATION RECORDS (PQR)

(See QW-200.2, Section IX, ASME Boiler and Pressure Vessel Code)

Record Actual Variables Used to Weld Test Coupon

Company Name:	5Blue Process Equipment Inc.		
Procedure Qualification Record No.:	5B-102-2	**Date:**	August 17, 2010
WPS No.:	5B-103 AW / PWHT		
Welding Process(es):	SMAW / SMAW		
Types (Manual, Automatic, Semi-Automatic):	Manual / Manual		

Joints (QW-420)

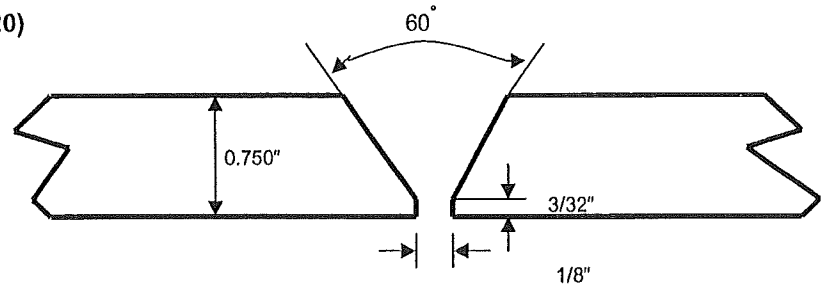

Groove Design of Test Coupon

(For combination qualifications, the deposited weld metal thickness shall be recorded for each filler metal and process used.)

BASE METALS (QW-403)

Material Spec.:	SA-516						
Type/Grade, or UNS Number:	Grade 60/70, Duel Rated						
P-No.:	P-1	**Group No.:**	1 and 2	to	**P-No.:**	P-1	**Group No.:** 1 and 2
Thickness of Test Coupon:	0.750" Plate						
Diameter of Test Coupon:	N/A						
Maximum Pass Thickness:	0.125"						
Heat No.:	292924-99513						
Other: Carbon Equivalent	0.40						

FILLER METALS (QW-404)			
	F-3– SMAW	**F-4 – SMAW**	
SFA Specification:	5.1	5.1	
AWS Classification:	E6010	E7018-1	
Filler Metal F-No.:	F-3	F-4	
Weld Metal Analysis A-No.:	A-1	A-1	
Size of Filler Metal:	1/8"	3/32", 1/8"	
Deposit Weld Metal Thickness	0.125"	0.625"	
Supplemental Filler Metal:	None	None	
Manufacturer:	Lincoln Electric	Air Liquide	
Trade Name:	Fleetweld 5+	LA 18 PLUS	
Heat Number:	Not Recorded	Not Recorded	
Filler Metal Product Form:	Coated Electrode	Coated Electrode	
Other:			

POSITIONS (QW-405)		
	F-3 SMAW	**F-4 SMAW**
Position of Groove:	3-G	3-G
Welding Progression (Uphill, Downhill):	Vertical Up	Vertical Up
Other:	N/A	N/A

PREHEAT (QW-406)	
Preheat Temperature:	50° F
Inter-pass Temperature:	550° F Maximum
Other:	N/A

POSTWELD HEAT TREATMENT (QW-407)	
Temperature:	N/A
Time:	N/A
Heating:	N/A
Cooling:	N/A
Other:	N/A

GAS (QW-408)			
	Gas(es)	Percent Composition (Mixture)	Flow Rate
Shielding:	None		
Trailing:			
Backing:			
Other:			

ELECTRICAL CHARACTERISTICS (QW-409)		
	F-3 SMAW	F-4 SMAW
Current:	Direct (DC)	Direct (DC)
Polarity:	Reverse (EP)	Reverse (EP)
Volts:	25 – 30	20 – 25
Amps:	50 – 60	75 – 115
Tungsten Electrode Size:	N/A	N/A
Mode of Metal Transfer:	N/A	N/A
Heat Input (Joules/Inch):	39 600	74 750
Wire Feed Speed (ipm):	N/A	N/A

TECHNIQUE (QW-410)		
	F-3 SMAW	F-4 SMAW
Travel Speed (ipm):	2.7 – 4.7	2.3 – 6.7
String or Weave Bead:	String	String and Weave
Oscillation:	N/A	N/A
Multi-pass or Single Pass (Per Side):	Multiple	Multiple
Single or Multiple Electrodes:	Single	Single
Wire Stick Out:	N/A	N/A
Nozzle / Cup Size:	N/A	N/A

QW-483 (Back)
TENSILE TEST (QW-150)

Specimen No (In.)	Width (In.)	Thickness (In.)	Area ($In.^2$)	Ultimate Total Load (lbs.)	Ultimate Unit Stress, (psi)	Type of Failure and Location
LY-T1	0.757	0.763	0.578	46 329	80 000	Ductile – Base Metal
LY-T2	0.759	0.760	0.577	45 851	70 500	Ductile – Base Metal

GUIDED-BEND TESTS (QW-160)	
TYPE and FIGURE NO.	**RESULT**
TSB QW-462.2	Pass
TSB QW-462.2	Pass
TSB QW-462.2	Pass
TSB QW-462.2	Pass

TOUGHNESS TESTS (QW-170)

Specimen No.	Notch Location	Specimen Size (mm)	Test Temperature	Impact Values			Drop Weight Break (Y/N)
				Ft-lb or J	% Shear	Mils (in.)	
LY-1	Weld	10 x 10	- 50° F	55	50	0.046	
LY-2	Weld	10 x 10	- 50° F	58	40	0.042	
LY-3	Weld	10 x 10	- 50° F	95	60	0.072	
LY-4	HAZ	10 x 10	- 50° F	129	80	0.090	
LY-5	HAZ	10 x 10	- 50° F	127	80	0.092	
LY-6	HAZ	10 x 10	- 50° F	112	70	0.075	

Comments:

FILLET-WELD TEST (QW-180)

Result – Satisfactory: Yes N/A No N/A **Penetration into Parent Metal:** Yes N/A No N/A

Macro – Results: N/A

Other Tests

Type of Test:

Deposit Analysis:

Other:

Welder's Name: Craig Tupper **Clock:** W-22902 **Stamp No.:** "LY"

Tests Conducted By: Qualimet **Laboratory Test No.:** 1111-10001

We re-certify that the statements in this record, as revised, are correct and that the test welds were prepared, welded and tested in accordance with Section IX of the ASME Boiler and Pressure Vessel Code.

Manufacturer or Contractor: 5Blue Process Equipment Inc.

Date: January 22, 2014 **Certified By:** Joelle Dery-Brochu

• 7817 CONFIDENT ROAD, FORT MCMURRAY, AB T9E 0H7 • (780) 743-3650 • FAX (780) 465-6829
CALGARY (403) 270-6622 • 1-800-521-8678 • www.qualimetinc.com

"Your source of Quality Materials Engineering"

MECHANICAL TEST REPORT

for Procedure Qualification Record # 5B-102-2

Client :	5Blue Process Equipment Inc.	Job Number:	1111-10001
Address:	2303 - 8th Street Nisku AB T9E 7Z1	Date:	August 17, 2010
Materials:	SA-516 Gr. 60/70		
Size:	0.750" Plate	Condition:	As Welded
Test Specification:	ASME Section IX		

Tensile Tests QW-462.1(a)

Sample Identification:	LY-T1	LY-T2
Sample Size - Inch:(W x T)	0.757 x 0.763	0.759 x 0.760
Least X-Sect. Area - in^2:	0.578	0.577
Ultimate Load - lbs:	46 329	45 851
Ult. Ten. Strength - ksi:	80.0	79.5
Character of Failure:	Ductile	Ductile
Location of Failure:	Base Metal	Base Metal
Req'd Tensile Strength - ksi:	70.0	70.0
Pass or Fail:	Pass	Pass
Remarks:	-----	-----

Bend Tests QW-462.2

Sample Identification:	LY-B1	LY-B2	LY-B3	LY-B4
*Type of Bend Test:	TSB	TSB	TSB	TSB
Pass or Fail:	Pass	Pass	Pass	Pass
Remarks:	----	----	----	----

*Types of Bend Tests TSB, TFB, TRB = transverse side, face or root bend LSB, LFB, LRB = longitudinal side, face or root bend

We certify that the statements in this record are acceptable, in accordance with the requirements of ASME Section IX.

TEST RESULTS CERTIFIED BY: Qualimet

Sean Lepine, E.I.T.

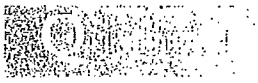

7817 CONCRETE ROAD, EDMONTON, AB T6E 4N7 • (780) 469-5070 • FAX (780) 465-5020
• CALGARY (403) 278-9802 • 1-800-661-0975 • www.qualimetinc.com
"Your source of Quality Materials Engineering"



CHARPY IMPACT TEST REPORT

for Procedure Qualification Record # 5B-102-2

Client :	5Blue Process Equipment Inc.	Job Number:	1111-10001
Address:	2303 - 8th Street Nisku AB T9E 7Z1	Date:	August 17, 2010
Materials:	SA-516 Gr. 60/70		
Size:	0.750" Plate	Condition:	As Welded
Test Specification:	ASME Section IX, ASME Section VIII UG-84, ASTM A-370		

Specimen Type:	Charpy V-Notch
Qualification Temperature:	-50° F

Specimen Size (mm): 10

Sample Set	Sample Number	Actual Impact Energy (ft-lb)	Full Size ft-lb	Shear (%)	Lateral Expansion Inches
Weld	LY-1	55	55	50	0.046
	LY-2	58	58	40	0.042
	LY-3	95	95	60	0.072
	Average:	69	69	50	0.053

We certify that the statements in this record are acceptable and that the specimen(s) were prepared and tested in accordance with the requirements of the current edition of ASME Section IX and the latest addenda.

TEST RESULTS CERTIFIED BY:

Qualimet

Sean Lepine, E.I.T.

Qualimet Inc
Licensed by Canadian Welding Bureau & Transport Canada & Authorized Welder Test Facility
ESTABLISHED 1973

• 7817 CORONET ROAD, EDMONTON, AB T6E 4N7 • (780) 469-5670 • FAX (780) 465-6020
• CALGARY (403) 278-9062 • 1-800-621-8970 • www.qualimetinc.com
"Your source of Quality Materials Engineering"

CHARPY IMPACT TEST REPORT

for Procedure Qualification Record # 5B-102-2

Client :	5Blue Process Equipment Inc.	Job Number:	1111-10001
Address:	2303 - 8th Street Nisku AB T9E 7Z1	Date:	August 17, 2010
Materials:	SA-516 Gr. 60/70		
Size:	0.750" Plate	Condition:	As Welded
Test Specification:	ASME Section IX, ASME Section VIII UG-84, ASTM A-370		

Specimen Type:	Charpy V-Notch
Qualification Temperature:	-50° F

Specimen Size (mm): 10

Sample Set	Sample Number	Actual Impact Energy (ft-lb)	Full Size ft-lb	Shear (%)	Lateral Expansion Inches
HAZ	LY-4	129	129	80	0.090
	LY-5	127	127	80	0.092
	LY-6	112	112	70	0.075
	Average:	123	123	77	0.086

We certify that the statements in this record are acceptable and that the specimen(s) were prepared and tested in accordance with the requirements of the current edition of ASME Section IX and the latest addenda.

TEST RESULTS CERTIFIED BY:

Sean Lepine, E.I.T.

Qualimet

CIL # 20419-104-CS-01

QW-483 PROCEDURE QUALIFICATION RECORDS (PQR)

(See QW-200.2, Section IX, ASME Boiler and Pressure Vessel Code)

Record Actual Variables Used to Weld Test Coupon

Company Name:	5Blue Process Equipment Inc.		
Procedure Qualification Record No.:	5B-102-3	**Date:**	August 17, 2010
WPS No.:	5B-103 AW / PWHT		
Welding Process(es):	SMAW / SMAW		
Types (Manual, Automatic, Semi-Automatic):	Manual / Manual		

Joints (QW-420)

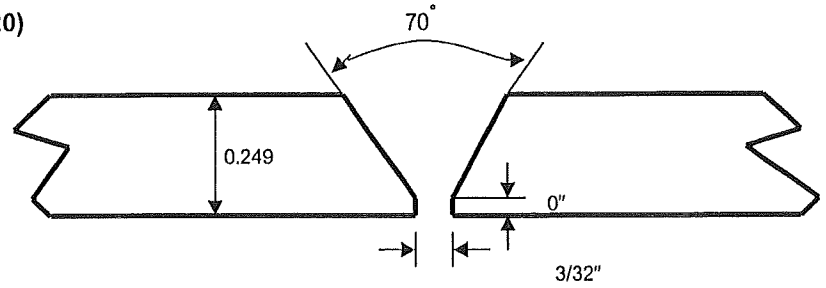

Groove Design of Test Coupon

(For combination qualifications, the deposited weld metal thickness shall be recorded for each filler metal and process used.)

BASE METALS (QW-403)

Material Spec.:	SA-516						
Type/Grade, or UNS Number:	Grade 60/70, Dual Rated						
P-No.:	P-1	**Group No.:**	1 and 2	to	**P-No.:**	P-1	**Group No.:** 1 and 2
Thickness of Test Coupon:	0.249" Plate (machined)						
Diameter of Test Coupon:	N/A						
Maximum Pass Thickness:	0.125"						
Heat No.:	49074-04703						
Other: Carbon Equivalent	0.38						

FILLER METALS (QW-404)			
	F-3– SMAW	**F-4 – SMAW**	
SFA Specification:	5.1	5.1	
AWS Classification:	E6010	E7018-1	
Filler Metal F-No.:	F-3	F-4	
Weld Metal Analysis A-No.:	A-1	A-1	
Size of Filler Metal:	1/8"	3/32"	
Deposit Weld Metal Thickness	0.124"	0.125"	
Supplemental Filler Metal:	None	None	
Manufacturer:	Lincoln Electric	Air Liquide	
Trade Name:	Fleetweld 5+	LA 18 PLUS	
Heat Number:	Not Recorded	Not Recorded	
Filler Metal Product Form:	Coated Electrode	Coated Electrode	
Other:			

POSITIONS (QW-405)		
	F-3 SMAW	**F-4 SMAW**
Position of Groove:	3-G	3-G
Welding Progression (Uphill, Downhill):	Vertical Up	Vertical Up
Other:	N/A	N/A

PREHEAT (QW-406)	
Preheat Temperature:	50° F
Inter-pass Temperature:	550° F Maximum
Other:	N/A

POSTWELD HEAT TREATMENT (QW-407)	
Temperature:	1150° F ± 25° F
Time:	3 hours soak at temperature
Other:	N/A

GAS (QW-408)			
	Gas(es)	**Percent Composition (Mixture)**	**Flow Rate**
Shielding:	None		
Trailing:			
Backing:			
Other:			

ELECTRICAL CHARACTERISTICS (QW-409)		
	F-3 SMAW	**F-4 SMAW**
Current:	Direct (DC)	Direct (DC)
Polarity:	Reverse (EP)	Reverse (EP)
Volts:	20 – 28	20 – 24
Amps:	50 – 70	60 – 75
Tungsten Electrode Size:	N/A	N/A
Mode of Metal Transfer:	N/A	N/A
Heat Input (Joules/Inch):	42 140	46 800
Wire Feed Speed (ipm):	N/A	N/A

TECHNIQUE (QW-410)		
	F-3 SMAW	F-4 SMAW
Travel Speed (ipm):	2.8 – 4.9	2.3 – 4.6
String or Weave Bead:	String	String and Weave
Oscillation:	N/A	N/A
Multi-pass or Single Pass (Per Side):	Multiple	Multiple
Single or Multiple Electrodes:	Single	Single
Wire Stick Out:	N/A	N/A
Nozzle / Cup Size:	N/A	N/A

QW-483 (Back)
TENSILE TEST (QW-150)

Specimen No (In.)	Width (In.)	Thickness (In.)	Area ($In.^2$)	Ultimate Total Load (lbs.)	Ultimate Unit Stress, (psi)	Type of Failure and Location
LZ-T1	0.746	0.264	0.197	13 646	69.5	Ductile – Base Metal
LZ-T2	0.751	0.257	0.193	13 120	68.0	Ductile – Base Metal

GUIDED-BEND TESTS (QW-160)	
TYPE and FIGURE NO.	**RESULT**
TFB QW-462.3 (a)	Pass
TRB QW-462.3 (a)	Pass
TFB QW-462.3 (a)	Pass
TRB QW-462.3 (a)	Pass

TOUGHNESS TESTS (QW-170)

Specimen No.	Notch Location	Specimen Size (mm)	Test Temperature	Impact Values			Drop Weight Break (Y/N)
				Ft-lb or J	% Shear	Mils (in.)	
LZ-1	Weld	5.4 x 10	- 50° F	33	60	0.051	
LZ-2	Weld	5.4 x 10	- 50° F	52	90	0.070	
LZ-3	Weld	5.4 x 10	- 50° F	47	70	0.073	
LZ-4	HAZ	5.4 x 10	- 50° F	74	100	0.085	
LZ-5	HAZ	5.4 x 10	- 50° F	76	100	0.090	
LZ-6	HAZ	5.4 x 10	- 50° F	80	100	0.101	

Comments:

FILLET-WELD TEST (QW-180)

Result – Satisfactory: Yes N/A No N/A **Penetration into Parent Metal:** Yes N/A No N/A

Macro – Results: N/A

Other Tests

Type of Test: Hardness Test – See Attached Report

Deposit Analysis:

Other: N/A

Welder's Name: Craig Tupper **Clock:** W-22902 **Stamp No.:** "LZ"

Tests Conducted By: Qualimet **Laboratory Test No.:** 1111-10001

We re-certify that the statements in this record, as revised, are correct and that the test welds were prepared, welded and tested in accordance with Section IX of the ASME Boiler and Pressure Vessel Code.

Manufacturer or Contractor: 5Blue Process Equipment Inc.

Date: January 22, 2014 **Certified By:** Joelle Dery-Brochu

[illegible]

MECHANICAL TEST REPORT

for Procedure Qualification Record # 5B-102-3

Client :	5Blue Process Equipment Inc.	Job Number:	1111-10001
Address:	2303 - 6th Street Nisku AB T9E 7Z1	Date:	August 17, 2010
Materials:	SA-516 Gr. 60/70		
Size:	0.249" Plate (machined)	Condition:	PWHT
Test Specification:	ASME Section IX		

Tensile Tests QW-462.1(a)

Sample Identification:	LZ-T1	LZ-T2
Sample Size - Inch(W x T)	0.748 x 0.264	0.751 x 0.267
Least X-Sect. Area - In²:	0.197	0.193
Ultimate Load - lbs:	13 646	13 120
Ult. Ten. Strength - ksi:	69.5	68.0
Character of Failure:	Ductile	Ductile
Location of Failure:	Base Metal	Base Metal
Req'd Tensile Strength - ksi:	70.0	70.0
Pass or Fail:	Pass	Pass
Remarks:	Within 5% of min. tensile strength	Within 5% of min. tensile strength

Bend Tests QW-462.3(a)

Sample Identification:	LZ-B1	LZ-B2	LZ-B3	LZ-B4
*Type of Bend Test:	TFB	TRB	TFB	TRB
Pass or Fail:	Pass	Pass	Pass	Pass
Remarks:	-----	-----	-----	-----

*Types of Bend Tests TSB, TFB, TRB = transverse side, face or root bend LSB, LFB, LRB = longitudinal side, face or root bend

We certify that the statements in this record are acceptable, in accordance with the requirements of ASME Section IX.

TEST RESULTS CERTIFIED BY:

Qualinet

Sean Lepine, E.I.T.

7617 CONCRETE ROAD, EDMONTON, AB T6E 1W7 (780) 439-6970 • FAX (780) 439-6960
CANADA (800) 378-6962 • 800-621-6979 www.qualimetinc.com
Subsidiary of Qualimet Materials Engineering

CHARPY IMPACT TEST REPORT

for Procedure Qualification Record # 5B-102-3

Client :	5Blue Process Equipment Inc.	Job Number:	1111-10001
Address:	2303 - 8th Street Nisku AB T9E 7Z1	Date:	August 17, 2010
Materials:	SA-516 Gr. 60/70		
Size:	0.249" Plate (machined)	Condition:	PWHT
Test Specification:	ASME Section IX, ASME Section VIII UG-84, ASTM A-370		

Specimen Type:	Charpy V-Notch
Qualification Temperature:	-50° F

Specimen Size (mm): 5.4

Sample Set	Sample Number	Actual Impact Energy (ft-lb)	Full Size ft-lb	Shear (%)	Lateral Expansion Inches
Weld	LZ-1	33	61	60	0.061
	LZ-2	62	96	90	0.070
	LZ-3	47	87	70	0.073
	Average:	44	81	73	0.086

We certify that the statements in this record are acceptable and that the specimen(s) were prepared and tested in accordance with the requirements of the current edition of ASME Section IX and the latest addenda.

TEST RESULTS CERTIFIED BY:

Qualimet

Sean Lepine, E.I.T.

Qualimet Inc.
Certified by Canadian Welding Bureau & Transport Canada & Bureau of Weather Test Facility
[illegible]

CIL # 20419-104-CS-01

[illegible]

CHARPY IMPACT TEST REPORT

for Procedure Qualification Record # 5B-102-3

Client :	5Blue Process Equipment Inc.	Job Number:	1111-10001
Address:	2303 - 8th Street Nisku AB T9E 7Z1	Date:	August 17, 2010
Materials:	SA-516 Gr. 60/70		
Size:	0.249" Plate (machined)	Condition:	PWHT
Test Specification:	ASME Section IX, ASME Section VIII UG-84, ASTM A-370		

Specimen Type:	Charpy V-Notch
Qualification Temperature:	-50° F

Specimen Size (mm): 5.4

Sample Set	Sample Number	Actual Impact Energy (ft-lb)	Full Size ft-lb	Shear (%)	Lateral Expansion Inches
HAZ	LZ-4	74	137	100	0.085
	LZ-5	76	141	100	0.090
	LZ-6	80	148	100	0.101
	Average:	77	142	100	0.092

We certify that the statements in this record are acceptable and that the specimen(s) were prepared and tested in accordance with the requirements of the current edition of ASME Section IX and the latest addenda.

TEST RESULTS CERTIFIED BY:

Qualinet

Sean Laplue, E.I.T.

[illegible]

CIL # 20419-104-CS-01

PQR: 5B-102-3

[redacted]

HARDNESS TEST REPORT

for Procedure Qualification Record # 5B-102-3

Client:	5Blue Process Equipment Inc.	Job Number:	1111-10001
Address:	2303 - 8th Street Nisku AB T9E 7Z1	Date:	August 17, 2010
Materials:	SA-516 Gr. 60/70		
Size:	0.340" Plate (machined)	Condition:	PWHT
Test Specification:	NACE RP-0472		

Test Method:	Hardness testing performed in accordance with ASTM E-92 (Vickers Hardness of Metallic Materials) using a Vickers tester with a 1 kg load

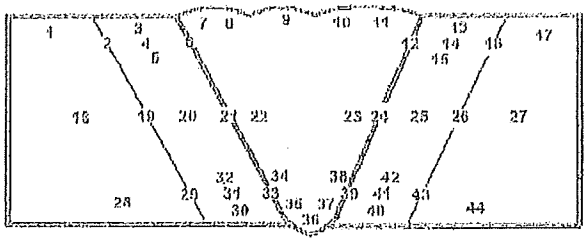

Vickers Hardness Values

1	160	10	194	19	154	28	151	37	157
2	156	11	204	20	174	29	153	38	164
3	165	12	175	21	170	30	162	39	159
4	169	13	190	22	180	31	142	40	156
5	175	14	187	23	170	32	164	41	163
6	189	15	184	24	140	33	162	42	164
7	208	16	152	26	163	34	153	43	164
8	180	17	148	26	150	36	156	44	159
9	192	18	150	27	154	36	159		

We certify that the statements in this record are acceptable, in accordance with the requirements of NACE RP 0472. RP 0472-2005 paragraph 5.3 states "The maximum allowable HAZ hardness shall be 248 HV the maximum weld deposit hardness should be 248 HV and the average weld deposit hardness should not exceed 210 HV"

TEST RESULTS CERTIFIED BY: Qualimet

Sonn Lepine, E.I.T.

Qualimet Inc.
[redacted]

CIL # 20419-104-CS-01

QW-483 PROCEDURE QUALIFICATION RECORDS (PQR)

(See QW-200.2, Section IX, ASME Boiler and Pressure Vessel Code)

Record Actual Variables Used to Weld Test Coupon

Company Name:	5Blue Process Equipment Inc.		
Procedure Qualification Record No.:	5B-102-4	**Date:**	August 17, 2010
WPS No.:	5B-103 AW / PWHT		
Welding Process(es):	GMAW (SC) / SMAW / SMAW		
Types (Manual, Automatic, Semi-Automatic):	Semi-Automatic / Manual / Manual		

Joints (QW-420)

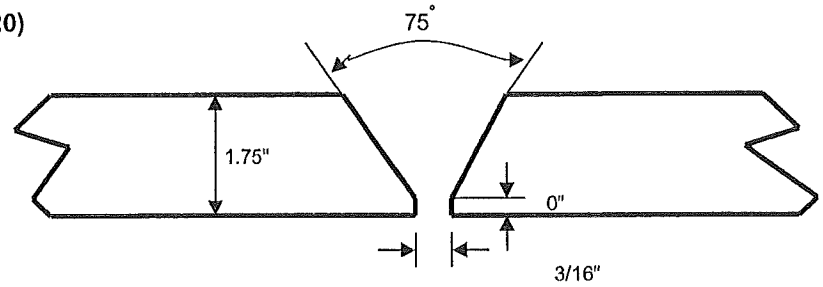

Groove Design of Test Coupon

(For combination qualifications, the deposited weld metal thickness shall be recorded for each filler metal and process used.)

BASE METALS (QW-403)

Material Spec.:	SA-516						
Type/Grade, or UNS Number:	Grade 60/70, Dual Rated						
P-No.:	P-1	**Group No.:**	1 and 2	to	**P-No.:**	P-1	**Group No.:** 1 and 2
Thickness of Test Coupon:	1.750" Plate						
Diameter of Test Coupon:	N/A						
Maximum Pass Thickness:	0.125"						
Heat No.:	335169-83718						
Other: Carbon Equivalent	0.39						

FILLER METALS (QW-404)			
	F-6 GMAW (SC)	**F-3 SMAW**	**F-4 SMAW**
SFA Specification:	5.18	5.1	5.1
AWS Classification:	ER70S-6	E6010	E7018-1
Filler Metal F-No.:	F-6	F-3	F-4
Weld Metal Analysis A-No.:	A-1	A-1	A-1
Size of Filler Metal:	0.035"	1/8"	3/32", 1/8"
Deposit Weld Metal Thickness	0.125	0.125"	1.500"
Supplemental Filler Metal:	None	None	None
Manufacturer:	Lincoln Electric	Lincoln Electric	Air Liquide
Trade Name:	SuperArc L 56	Fleetweld 5 +	LA 18 PLUS
Heat Number:	V06G2129F9	Not Recorded	Not Recorded
Filler Metal Product Form:	Coiled Solid Wire	Coated Electrode	Coated Electrode
Other:			

POSITIONS (QW-405)			
	F-6 GMAW	**F-3 SMAW**	**F-4 SMAW**
Position of Groove:	3-G	3-G	3-G
Welding Progression (Uphill, Downhill):	Vertical Down	Vertical Up	Vertical Up
Other:	N/A	N/A	N/A

PREHEAT (QW-406)	
Preheat Temperature:	50° F
Inter-pass Temperature:	550° F Maximum
Other:	N/A

CIL # 20419-104-CS-01

POSTWELD HEAT TREATMENT (QW-407)	
Temperature:	1150° F ± 25° F
Time:	9 hours soak at temperature
Other:	N/A

GAS (QW-408)			
	Gas(es)	**Percent Composition (Mixture)**	**Flow Rate**
Shielding:	SFA 5.32, SG-AC-25	75% Argon, 25% CO_2	30 cfh
Trailing:	None		
Backing:	None		
Other:			

ELECTRICAL CHARACTERISTICS (QW-409)			
	F-6 GMAW (SC)	**F-3 SMAW**	**F-4 SMAW**
Current:	Direct (DC)	Direct (DC)	Direct (DC)
Polarity:	Reverse (EP)	Reverse (EP)	Reverse (EP)
Volts:	16 - 19	25 – 30	20 – 25
Amps:	65 - 100	65 – 85	90 – 135
Tungsten Electrode Size:	N/A	N/A	N/A
Mode of Metal Transfer:	Short Circuit	N/A	N/A
Heat Input (Joules/Inch):	47 940	51 000	74 250
Wire Feed Speed (ipm):	124	N/A	N/A

TECHNIQUE (QW-410)			
	F-6 GMAW (SC)	**F-3 SMAW**	**F-4 SMAW**
Travel Speed (ipm):	3.2 – 4.5	3.0 – 4.3	2.5 – 8.8
String or Weave Bead:	String	String and Weave	String and Weave
Oscillation:	N/A	N/A	N/A
Multi-pass or Single Pass (Per Side):	Multiple	Multiple	Multiple
Single or Multiple Electrodes:	Single	Single	Single
Wire Stick Out:	N/A	N/A	N/A
Nozzle / Cup Size:	N/A	N/A	N/A

QW-483 (Back)
TENSILE TEST (QW-150)

Specimen No (In.)	Width (In.)	Thickness (In.)	Area ($In.^2$)	Ultimate Total Load (lbs.)	Ultimate Unit Stress, (psi)	Type of Failure and Location
MA-T1	0.758	1.435	1.088	78 360	72 000	Ductile – Base Metal
MA-T2	0.755	1.472	1.111	80 809	72 500	Ductile – Base Metal

GUIDED-BEND TESTS (QW-160)	
TYPE and FIGURE NO.	**RESULT**
TSB QW-462.2	Pass
TSB QW-462.2	Pass
TSB QW-462.2	Pass
TSB QW-462.2	Pass

TOUGHNESS TESTS (QW-170)

Specimen No.	Notch Location	Specimen Size (mm)	Test Temperature	Impact Values			Drop Weight Break (Y/N)
				Ft-lb or J	% Shear	Mils (in.)	
MA-1	Weld - Cap	10 x 10	- 50° F	23	30	0.025	
MA-2	Weld - Cap	10 x 10	- 50° F	112	70	0.084	
MA-3	Weld - Cap	10 x 10	- 50° F	84	50	0.072	
MA-4	Weld – Root	10 x 10	- 50° F	80	60	0.068	
MA-5	Weld – Root	10 x 10	- 50° F	33	40	0.028	
MA-6	Weld – Root	10 x 10	- 50° F	43	40	0.033	
MA-7	HAZ	10 x 10	- 50° F	137	70	0.093	
MA-8	HAZ	10 x 10	- 50° F	147	80	0.085	
MA-9	HAZ	10 x 10	- 50° F	137	70	0.086	

Comments:

FILLET-WELD TEST (QW-180)

Result – Satisfactory: Yes N/A No N/A **Penetration into Parent Metal:** Yes N/A No N/A

Macro – Results: N/A

Other Tests

Type of Test: Hardness Test – See Attached Report

Deposit Analysis:

Other: N/A

Welder's Name: Craig Tupper **Clock:** W-22902 **Stamp No.:** "MA"

Tests Conducted By: Qualimet **Laboratory Test No.:** 1111-10005

We re-certify that the statements in this record, as revised, are correct and that the test welds were prepared, welded and tested in accordance with Section IX of the ASME Boiler and Pressure Vessel Code.

Manufacturer or Contractor: 5Blue Process Equipment Inc.

Date: January 22, 2014 **Certified By:** Joelle Dery-Brochu

• 2317 Coronet Road, Fort Nelson, BC V0C 1R0 • (780) 695-5870 • FAX (780) 695-5878
• Calgary (AB) 278-9462 • 1-800-661-9878 • www.qualmet.com
"Your source of Quality Nondestructive Engineering"

MECHANICAL TEST REPORT

for Procedure Qualification Record # 5B-102-4

Client :	5Blue Process Equipment Inc.	Job Number:	1111-10001
Address:	2303 - 6th Street Nisku AB T9E 7Z1	Date:	August 17, 2010
Materials:	SA-516 Gr. 60/70		
Size:	1.750" Plate	Condition:	PWHT
Test Specification:	ASME Section IX		

Tensile Tests QW-462.1(a)

Sample Identification:	MA-T1	MA-T2
Sample Size - Inch:(W x T)	0.758 x 1.435	0.756 x 1.472
Least X-Sect. Area - in^2:	1.088	1.111
Ultimate Load - lbs:	78 360	80 809
Ult. Ten. Strength - ksi:	72.0	72.5
Character of Failure:	Ductile	Ductile
Location of Failure:	Base Metal	Base Metal
Req'd Tensile Strength - ksi:	70.0	70.0
Pass or Fail:	Pass	Pass
Remarks:	----	-----

Bend Tests QW-462.2

Sample Identification:	MA-B1	MA-B2	MA-B3	MA-B4
*Type of Bend Test:	TSB	TSB	TSB	TSB
Pass or Fail:	Pass	Pass	Pass	Pass
Remarks:	-----	-----	-----	-----

*Types of Bend Tests TSB, TFB, TRB = transverse side, face or root bend LSB, LFB, LRB = longitudinal side, face or root bend

We certify that the statements in this record are acceptable, in accordance with the requirements of ASME Section IX.

TEST RESULTS CERTIFIED BY: Qualmet

Sean Lepine, E.I.T.

CIL # 20419-104-CS-01

[illegible]
"Your source of Quality Materials Engineering"

CHARPY IMPACT TEST REPORT

for Procedure Qualification Record # 5B-102-4

Client :	5Blue Process Equipment Inc.	Job Number:	1111-10001
Address:	2303 - 8th Street Nisku AB T9E 7Z1	Date:	August 17, 2010
Materials:	SA-516 Gr. 60/70		
Size:	1.750" Plate	Condition:	PWHT
Test Specification:	ASME Section IX, ASME Section VIII UG-84, ASTM A-370		

Specimen Type:	Charpy V-Notch
Qualification Temperature:	-50° F

Specimen Size (mm): 10

Sample Set	Sample Number	Actual Impact Energy (ft-lb)	Full Size ft-lb	Shear (%)	Lateral Expansion Inches
Weld - Cap	MA-1	23	23	30	0.025
	MA-2	112	112	70	0.084
	MA-3	84	84	50	0.072
	Average:	73	73	50	0.060

We certify that the statements in this record are acceptable and that the specimen(s) were prepared and tested in accordance with the requirements of the current edition of ASME Section IX and the latest addenda.

TEST RESULTS CERTIFIED BY:

Qualimet

Sean Lepine, E.I.T.

CIL # 20419-104-CS-01

7817 COBURN ROAD, EDMONTON AB T6E 4N7 • (780) 468-5970 • FAX (780) 468-5925
• CALGARY (403) 276-9562 • 1-800-621-0379 • www.qualimetinc.com
"Your source of Quality Materials Engineering"

CHARPY IMPACT TEST REPORT

for Procedure Qualification Record # 5B-102-4

Client :	5Blue Process Equipment Inc.	Job Number:	1111-10001
Address:	2303 - 8th Street Nisku AB T9E 7Z1	Date:	August 17, 2010
Materials:	SA-516 Gr. 60/70		
Size:	1.750" Plate	Condition:	PWHT
Test Specification:	ASME Section IX, ASME Section VIII UG-84, ASTM A-370		

Specimen Type:	Charpy V-Notch
Qualification Temperature:	-60° F

Specimen Size (mm): 10

Sample Set	Sample Number	Actual Impact Energy (ft-lb)	Full Size ft-lb	Shear (%)	Lateral Expansion Inches
Weld - Root	MA-4	80	80	60	0.068
	MA-5	33	33	40	0.028
	MA-6	43	43	40	0.033
	Average:	52	52	47	0.043

We certify that the statements in this record are acceptable and that the specimen(s) were prepared and tested in accordance with the requirements of the current edition of ASME Section IX and the latest addenda.

TEST RESULTS CERTIFIED BY: Qualimet

Sean Lepine, E.I.T.

CIL # 20419-104-CS-01

7817 CORONET ROAD, EDMONTON, AB T6E 4H7 • (780) 489-3370 • FAX (780) 465-5829
CALGARY (403) 270-9962 • 800 621 8770 www.qualimet.com
"Our source of Quality Materials Engineering"

CHARPY IMPACT TEST REPORT

for Procedure Qualification Record # 5B-102-4

Client :	5Blue Process Equipment Inc.	Job Number:	1111-10001
Address:	2303 - 8th Street Nisku AB T9E 7Z1	Date:	August 17, 2010
Materials:	SA-516 Gr. 60/70		
Size:	1.750" Plate	Condition:	PWHT
Test Specification:	ASME Section IX, ASME Section VIII UG-84, ASTM A-370		

Specimen Type:	Charpy V-Notch
Qualification Temperature:	-50° F

Specimen Size (mm): 10

Sample Set	Sample Number	Actual Impact Energy (ft-lb)	Full Size ft-lb	Shear (%)	Lateral Expansion Inches
HAZ	MA-7	137	137	70	0.093
	MA-8	147	147	80	0.085
	MA-9	137	137	70	0.086
	Average:	140	140	73	0.088

We certify that the statements in this record are acceptable and that the specimen(s) were prepared and tested in accordance with the requirements of the current edition of ASME Section IX and the latest addenda.

TEST RESULTS CERTIFIED BY: Qualimet

Sean Lepine, E.I.T.

Qualimet Inc.
Certified by Canadian Welding Bureau & Transport Canada & Authorized Welder Test Facility
ESTABLISHED 1973

CIL # 20419-104-CS-01

7617 LOCHEM ROAD, EDMONTON, AB T6E 4H7 · (780) 408-9670 · FAX (780) 463-4429
CALGARY (403) 228-9882 · 1-800-621-0079 · www.qualimetinc.com
"Your source of Quality Materials Engineering"

HARDNESS TEST REPORT

for Procedure Qualification Record # 5B-102-4

Client :	5Blue Process Equipment Inc.	Job Number:	1111-10001
Address:	2303 - 8th Street Nisku AB T9E 7Z1	Date:	August 17, 2010
Materials:	SA-516 Gr. 60/70		
Size:	1.750" Plate	Condition:	PWHT
Test Specification:	NACE RP-0472		

Test Method:	Hardness testing performed in accordance with ASTM E-92 (Vickers Hardness of Metallic Materials) using a Vickers tester with a 1 kg load

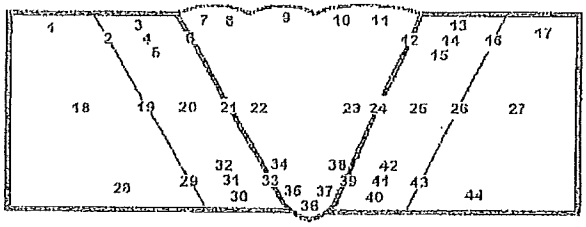

Vickers Hardness Values

1	136	10	187	19	163	28	140	37	166
2	144	11	204	20	156	29	149	38	158
3	168	12	178	21	163	30	149	39	156
4	174	13	186	22	192	31	159	40	167
5	163	14	180	23	197	32	170	41	184
6	186	15	166	24	213	33	148	42	159
7	190	16	167	25	188	34	155	43	158
8	202	17	137	26	154	35	150	44	142
9	178	18	136	27	136	36	149		

We certify that the statements in this record are acceptable, in accordance with the requirements of NACE RP 0472. RP 0472-2005 paragraph 5.3 states "The maximum allowable HAZ hardness shall be 248 HV the maximum weld deposit hardness should be 248 HV and the average weld deposit hardness should not exceed 210 HV"

TEST RESULTS CERTIFIED BY: Qualimet

Sean Lepine, E.I.T.

Qualimet Inc.
Certified by Canadian Welding Bureau & Transport Canada & Authorized Welder Test Facility
Est. PUBLISHED 1973

CIL # 20419-104-CS-01

QW-483 PROCEDURE QUALIFICATION RECORDS (PQR)

(See QW-200.2, Section IX, ASME Boiler and Pressure Vessel Code)

Record Actual Variables Used to Weld Test Coupon

Company Name:	5Blue Process Equipment Inc.		
Procedure Qualification Record No.:	5B-103-2	**Date:**	January 22, 2014
WPS No.:	5B-103 AW / PWHT		
Welding Process(es):	GMAW / SMAW		
Types (Manual, Automatic, Semi-Automatic):	Semi-Automatic / Manual		

Joints (QW-420)

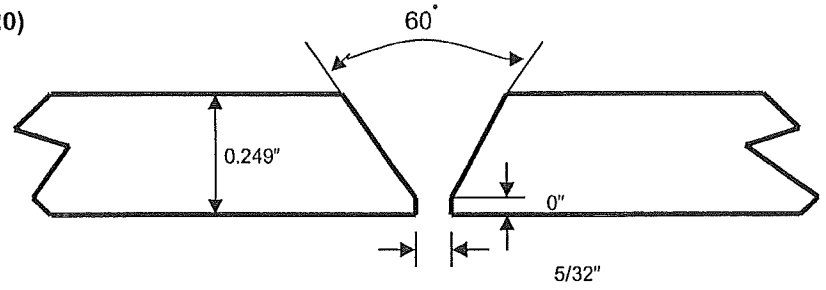

Groove Design of Test Coupon

(For combination qualifications, the deposited weld metal thickness shall be recorded for each filler metal and process used.)

BASE METALS (QW-403)

Material Spec.:	SA-516						
Type/Grade, or UNS Number:	Grade 60/70, Dual Rated						
P-No.:	P-1	**Group No.:**	1	to	**P-No.:** P-1	**Group No.:**	1
Thickness of Test Coupon:	0.249"						
Diameter of Test Coupon:	Flat Plate						
Maximum Pass Thickness:	0.200"						
Heat No.:	1445M 53756						
Other:	N/A						

FILLER METALS (QW-404)			
	1 – GMAW	2 – SMAW	3
SFA Specification:	5.18	5.1	
AWS Classification:	ER-70S-6	E-7018-1	
Filler Metal F-No.:	6	4	
Weld Metal Analysis A-No.:	1	1	
Size of Filler Metal:	0.035"	5/32"	
Filler Metal Product Form:	Solid Wire	Coated Electrode	
Supplemental Filler Metal:	N/A	N/A	
Electrode Flux Classification:	N/A	N/A	
Flux Type:	N/A	N/A	
Weld Metal Thickness:	0.079"	0.171"	
Other:	N/A	N/A	

POSITIONS (QW-405)	
Position of Groove:	3G
Welding Progression (Uphill, Downhill):	GMAW – Down, SMAW – Up
Other:	N/A

PREHEAT (QW-406)	
Preheat Temperature:	50° F
Inter-pass Temperature:	550° F Maximum
Other:	N/A

POSTWELD HEAT TREATMENT (QW-407)	
Temperature:	N/A
Time:	N/A
Other:	N/A

GAS (QW-408)			
	Gas(es)	Percent Composition (Mixture)	Flow Rate
Shielding:	SFA 5.32; SG-AC-25	75% / 25%	45 scfh
Trailing:	N/A		
Backing:	N/A		
Other:	N/A		

ELECTRICAL CHARACTERISTICS (QW-409)			
Current:		Direct	
Polarity:		Reverse	
Amps:	106 to 192	Volts:	18.3 to 24.2
Tungsten Electrode Size:		N/A	
Mode of Metal Transfer for GMAW (FCAW):		Short Circuit Arc	
Heat Input:		29 133 Joules/Inch	
Other:		N/A	

TECHNIQUE (QW-410)	
Travel Speed:	6 to 12 ipm
String or Weave Bead:	String and Weave
Oscillation:	N/A
Multi-pass or Single Pass (Per Side):	Multi-pass
Single or Multiple Electrodes:	Single
Other:	N/A

QW-483 (Back)
TENSILE TEST (QW-150)

Specimen No (In.)	Width (In.)	Thickness (In.)	Area ($In.^2$)	Ultimate Total Load (lbs.)	Ultimate Unit Stress, (psi)	Type of Failure and Location
1	0.761	0.241	0.183	14 580	79 500	Ductile Weld
2	0.757	0.243	0.184	14 730	80 100	Ductile Weld

GUIDED-BEND TESTS (QW-160)	
TYPE and FIGURE NO.	**RESULT**
Face Bend QW – 462.3 (a)	Pass
Face Bend QW – 462.3 (a)	Pass
Root Bend QW – 462.3 (a)	Pass
Root Bend QW – 462.3 (a)	Pass

TOUGHNESS TESTS (QW-170)

Specimen No.	Notch Location	Specimen Size (mm)	Test Temperature	Impact Values			Drop Weight Break (Y/N)
				Ft-lb or J	% Shear	Mils (in.)	
1							
2							
3							
4							
5							
6							
7							
8							
9							

Comments:

FILLET-WELD TEST (QW-180)

Result – Satisfactory: Yes N/A No N/A **Penetration into Parent Metal:** Yes N/A No N/A

Macro – Results: N/A

Other Tests

Type of Test: Hardness Test – Vickers 1 kg – See Attached

Deposit Analysis:

Other: N/A

Welder's Name: Corey Schonke **Clock:** W18658 **Stamp No.:** "Z"

Tests Conducted By: Alfor Metallurgical **Laboratory Test No.:** 14-040

We certify that the statements in this record, as revised, are correct and that the test welds were prepared, welded and tested in accordance with Section IX of the ASME Boiler and Pressure Vessel Code.

Manufacturer or Contractor: 5Blue Process Equipment Inc.

Date: January 22, 2014 **Certified By:** Joelle Dery-Brochu

CIL # 20419-104-CS-01

Weld Procedure Work Sheet

WPS#: 5B-103
PQR#: TBA

PQR Data

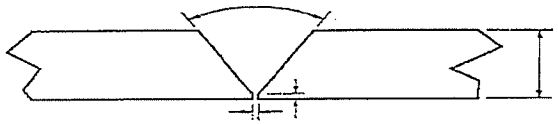

Weld Pass	Process/Consumable Size	Volts	Amps	Travel Speed (in/min)	Heat Input Joules/in	Deposted Thk.
1	GMAW 0.35" ER70S-6	18.3	106	6	19398	2mm(after grinding)
2	SMAW 5/32 7018-1	24.2	182	12	22022	2mm
3	SMAW 5/32 7018-1	23	190	9	29133	2mm
4	SMAW 5/32 7018-1	24	189	10	27216	2mm
5	SMAW 5/32 7018-1	22	192	10	25344	2mm
6						
7						
8						
9						
10						
11						
12						
13						
14						
15						
16						
17						
18						
19						
20						
21						
22						

Welder Name: Corey Schonke
Welder Stamp: Z
Welder File#: ABSA W-18658

Material Thickness	0.249"
Weld Gap	0.156"
Weld Land	feathered edge
Bevel Angle	30°

PQR: 5B-103-2

ALFOR METALLURGICAL COMPANY LTD.
CONSULTING ENGINEERS

FILE #14-040

PQR #5B-103-2

January 22, 2014

Caliper Inspection Ltd.
406, 11979 - 40 Street S.E.
Calgary, Alberta T2Z 4M3

METAL TEST REPORT

Material Description: ASME SA-516, Grade 70; 0.250"-thick plate; as-welded condition.

Specimen Type: Reduced-section tensile, as per Figure QW-462.1(a) of the ASME Code; guided face and root bend, as per Figure QW-462.3(a) of the ASME Code.

Results:	Sample 1	Sample 2
Width:	0.761 in.	0.757 in.
Thickness:	0.241 in.	0.243 in.
Area:	0.183 sq. in.	0.184 sq. in.
Ultimate Load:	14 580 lb	14 730 lb
Ultimate Tensile Strength:	79 500 psi	80 100 psi
Fracture Character:	Ductile	Ductile
Fracture Location:	Weld	Weld

Guided face bend (samples 2 and 4), guided root bend (samples 1 and 3): Pass Tests.

Yours very truly,

PERMIT TO PRACTICE
ALFOR METALLURGICAL COMPANY LTD.
Signature
Date Jan. 22, 2014

ALFOR METALLURGICAL COMPANY LTD.

CHARLES E. MOZESON, P. ENG

6035 - 88 STREET, EDMONTON, ALBERTA T6E 5T4 PHONE: 780-465-0562

ALFOR METALLURGICAL COMPANY LTD.
CONSULTING ENGINEERS

FILE #14-040

PQR #5B-103-2

January 22, 2014

Caliper Inspection Ltd.
406, 11979 - 40 Street S.E.
Calgary, Alberta T2Z 4M3

VICKERS HARDNESS TESTING OF WELDMENT

Material Description: ASME SA-516, Grade 70; 0.250"-thick plate; as-welded condition.

Vickers hardness testing at 1 kg mass (HV1) was performed on a prepared cross-section of the weldment, in accordance with NACE MR0175/ISO 15156-2 and ASTM E 92.

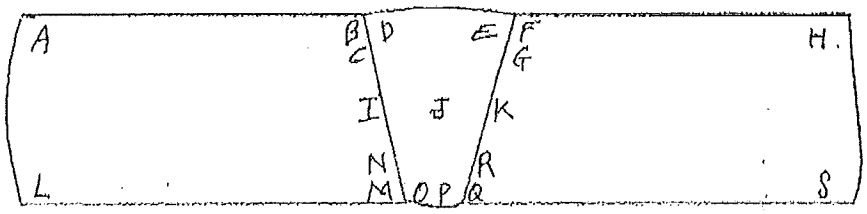

Location	HV1	Location	HV1	Location	HV1
A	170	H	173	O	179
B	211	I	191	P	176
C	188	J	164	Q	183
D	172	K	183	R	182
E	170	L	181	S	177
F	204	M	188		
G	187	N	195		

PERMIT TO PRACTICE
ALFOR METALLURGICAL COMPANY LTD.
Signature
Date Jan. 22, 2014
PERMIT NUMBER: P 8763
The Association of Professional Engineers, Geologists and Geophysicists of Alberta

Yours very truly,

ALFOR METALLURGICAL COMPANY LTD.

1/22/14

CHARLES E. MOZESON, P. ENG

6035 - 88 STREET, EDMONTON, ALBERTA T6E 5T4 PHONE: 780-465-0562

LIST OF NON-ESSENTIAL VARIABLES for WPS

ASME Sec IX Code Para.	Work Order or Job #	Deviation from original WPS including the original WPS write up

TO REMAIN WITH ORGINAL WPS

the pressure equipment safety authority

9410 - 20 Ave N.W.
Edmonton, Alberta, Canada T6N 0A4
Tel: (780) 437-9100 / Fax: (780) 437-7787

November 01, 2013

Attention: Joelle Dery-Brochu
5BLUE PROCESS EQUIPMENT INC
2303 8 STREET
NISKU, AB

The welding procedure, tracking number 2013-07749, originally received on October 23, 2013 was surveyed and accepted for registration as follows:

Reg. No. : WP-3146.2 **Accepted on:** October 31, 2013

Reg Type: Revision To accepted Design

Spec. No. : 5B-106AW REV 1

An invoice covering survey and registration fees will be forwarded from our Revenue Accounts.

Enclosed is a stamped welding procedure for your reference.

Please note the acceptance of this registration does not allow the use of this welding procedure in the construction, modification, on any boiler, pressure vessel, pressure piping system or fitting in Alberta unless the contractor/manufacturer has registered a Quality Control System for such work with ABSA.

Sincerely,

R. Roseberg

ROSEBERG, BOB, P. Eng.

WPS Number:	5B-106AW Revision 1
PQR Number:	5B-106AW-1, 5B-106AW-2, 5B106AW-3, 5B-106AW-4, 5B-106AW-5, 5B-103-1

QUALIFIED FOR

Material P Number:	P1 Group 1 and 2	
Material Type (typical):	SA-106 Grade B, SA-105, SA-333 Grade 6, SA-350 Grade LF2	
	SA-516 Grade 60/65/70	
Process:	GMAW / SMAW / SAW	
Position:	Special, Flat	
Diameter:	All Diameters	
Joint Design:	All Grooves and Fillet Weld Design	
AWS Classification:	ER70S-6, E7018-1, F7A8 EM14K-H8	
Thickness:	0.188" to 2"	As Welded
	0.375" to 2"	As Welded with CVN

ABSA

SAFETY CODES ACT - PROVINCE OF ALBERTA
WELDING PROCEDURE

Reg. No. WP 3146.2
Spec. No. 5B-106 AW (REV 1)
Weld Process GMAW / SMAW / SAW
Matl. Gr. P No. 1 Gr 1+2 to P No. 1 Gr 1+2
Elec. Gr. F No. 6+4+6 A No. 1
Th. Qual. For 50.8 MM P.W.H.T. NO
MIN. TH. QUAL 9.5 mm, CVN -46°C

Yr. 13 Mo. 10 Day 31 Signed
R. ROSEBERG, P.ENG.
WELDING SPECIALIST

CIL # 20419-102-CS-01

11/07/2013 08:31 780-437-7787 ABSA PAGE 02/02

2010 SECTION IX

QW-482 WELDING PROCEDURE SPECIFICATIONS (WPS)
(See QW-200.1, Section IX, ASME Boiler and Pressure Vessel Code)

Company Name:	5Blue Process Equipment Inc.	**By:**	Paul Frederick
Welding Procedure Specification No.:	5B-106AW	**Date:**	March 10, 2011
Supporting PQR No.(s):	5B-106AW-1, 5B-106AW-2, 5B106AW-3, 5B-106AW-4, 5B-106AW-5, 5B-103-1		
Revision No.: 1	Editorial Update and adding 5B-106AW-5 and 5B-103-1	**Date:**	October 21, 2013
Welding Process(es):	GMAW / SMAW	**Type(s):**	Semi-Automatic / Manual / Automatic
			(Automatic, Manual, Machine or Semi-Automatic)

JOINTS (QC-402)

Joint Design: All Groove and Fillets

Root Spacing: 0" to 1/4"

Backing: **Yes** ☒ **No** ☒
SMAW GMAW

Backing Material (Type): GMAW Weld Metal
(refer to both backing and retainers)

☒ Metal ☐ Non-Fusing Metal
☐ Non-Metallic ☐ Other

Sketches, Production Drawings, Weld Symbols, or Written Description should show the general arrangement of the parts to be welded. Where applicable, the details of the weld groove may be specified.

(At the option of the manufacturer, sketches may be attached to illustrate joint design, weld layers, and bead sequence (e.g. for notch toughness procedures, for multiple process procedures, etc.))

See Attached

BASE METALS (QW-403)

P-No.:	1	**Group No.:**	1 and 2	to **P-No.:**	1	**Group No.:**	1 and 2
Thickness Range:							
Base Metal:	**Groove**	0.125" to 2"		**Fillet**	All		
Maximum Pass Thickness ≤ 1/2 inch (13 mm):				**Yes**	☒	**No**	☐
Other:	All Pipe Diameters						

FILLER DETAILS (QW-404)			
	1 – GMAW	**2 – SMAW**	**3 - SAW**
Spec. No. (SFA):	5.18	5.1	5.17
AWS No. (Class):	ER70S-6	E7018-1	EM14K
F-No.:	6	4	6
A-No.:	1	1	1
Size of Filler Metals:	0.035" to 0.045"	3/32" to 1/4"	5/64" to 5/32"
Filler Metal Product Form:	Solid Wire	Coated Electrical	Solid Wire
Supplemental Filler Metal:	None	None	None
Thickness Range:			
o Groove	0.138" Maximum	0.200" Maximum	1.5" Maximum
o Fillet	All	All	All
Electrode-Flux (Class):	N/A	N/A	F7A8-EM14K-H8
Flux Type:	N/A	N/A	Neutral
Flux Trade Name:	N/A	N/A	N/A
Consumable Insert:	N/A	N/A	N/A
Other:	ER70S-6 to comply with A1 weld metal deposit		

POSITIONS (QW-405)				
Position(s) of Groove:	GMAW - 45°, SMAW – 1G, SAW-1G			
Welding Progression:	**Up**	N/A	**Down**	GMAW
Position(s) of Fillet:	All			
Other:	N/A			

PREHEAT (QW-406)			
Preheat Temperature:	**Minimum**	50° F	See Attached Chart
Inter-pass Temperature:	**Maximum**	450° F	
Preheat Maintenance:	Continuous Welding and Reheating		
Other:	N/A		

(Continuous or special heating, where applicable, should be recorded)

POSTWELD HEAT TREATMENT (QW-407)	
Temperature Range:	N/A
Time Range:	N/A
Other:	N/A

GAS (QW-408)			
	Gas(es)	**Percent Composition (Mixture)**	**Flow Rate**
Shielding:	SFA 5.32; SG-AC-25	75% / 25%	20 - 50 scfh
Trailing:	N/A		
Backing:	N/A		
Other:			

ELECTRICAL CHARACTERISTICS (QW-410)

		Filler Metal		Current					
Weld Layers	Process	Class	Diameter (in)	Type Polarity	Amp. (Range)	Volt (Range)	Wire Feed Speed Range (imp)	Travel Speed (ipm)	Other "*"
1	GMAW	ER70S-X	0.035	DCEP	70 – 200	14 – 26		1 – 14	
1	GMAW	ER70S-X	0.045	DCEP	70 – 200	14 – 26		1 – 14	
1	GMAW	ER70S-X	0.062	DCEP	70 – 200	14 – 26		1 –14	
Rem	SMAW	E7018-1	3/32	DCEP	45 – 130	18 – 28		1 –14	
Rem	SMAW	E7018-1	1/8	DCEP	70 – 180	19 – 30		2 - 16	
Rem	SMAW	E7018-1	5/32	DCEP	90 – 230	20 – 32		3 - 18	
Rem	SMAW	E7018-1	3/16	DCEP	130 – 290	20 – 34		4 – 19	
Rem	SMAW	E7018-1	1/4	DCEP	180 – 360	22 – 34		4 – 20	
Rem	SAW (S)	EM14K-H8	5/64, 3/32, 1/8, 5/32, 3/16	DCEP	250 – 1000	22 – 42		5 – 50	
Rem	SAW (T)	EM14K-H8	5/64, 3/32, 1/8, 5/32, 3/16	DCEP	250 – 1000	22 – 42		5 – 50	
Rem	SAW (T)	EM14K-H8	5/64, 3/32, 1/8, 5/32, 3/16	AC	250 – 1000	22 – 42		5 – 50	
	Notes:	Number of weld layers and size of filler metal may vary with thickness of base material and position of weld. (S) = Single Wire, (T) = Tandem Wire							

Note: "" Minimum Travel Speed at Maximum Amps and Volts for impact Requirements*

$$\text{Heat Input} = \frac{\text{Amps} \times \text{Volts} \times 60}{\text{Travel Speed (ipm)}}$$

Amps and volts, or power or energy range, should be recorded for each electrode size, position and thickness, etc.			
Pulsing Current:	None	Heat Input (Max)	See Below
Tungsten Electrode Size and Type:	N/A (Pure Tungsten, 2% Thoriated, etc.)		
Mode of Metal Transfer for GMAW (FCAW):	Short Circuiting Arc (Spray Arc, Short Circuiting Arc, etc.)		
Other:	N/A		

Base Metal Thickness Range	Heat Input – Joules/Inch			
	GMAW	**SMAW**	**SAW – Single**	**SAW – Tandem**
0.625" to 2"	33,863	45,451	69,878	62,105
0.500" to 0.625"	22,695	27,634		52,155
0.375" to 0.625"	29,810	59,500	47,478	

TECHNIQUE (QW-410)	
String or Weave Bead:	String and Weave
Orifice, Nozzle or Gas Cup Size:	0.375"
Initial and Inter-pass Cleaning (Brushing, Grinding, etc.):	Brushing, Chipping, Grinding
Method of Back Gouging:	Air Carbon Arc and Grinding
Oscillation:	N/A
Contact Tube to Work Distance:	N/A
Multiple or Single Pass (Per Side):	Multiple
Multiple or Single Electrodes:	Single
Electrode Spacing:	N/A
Peening:	N/A
Other:	N/A

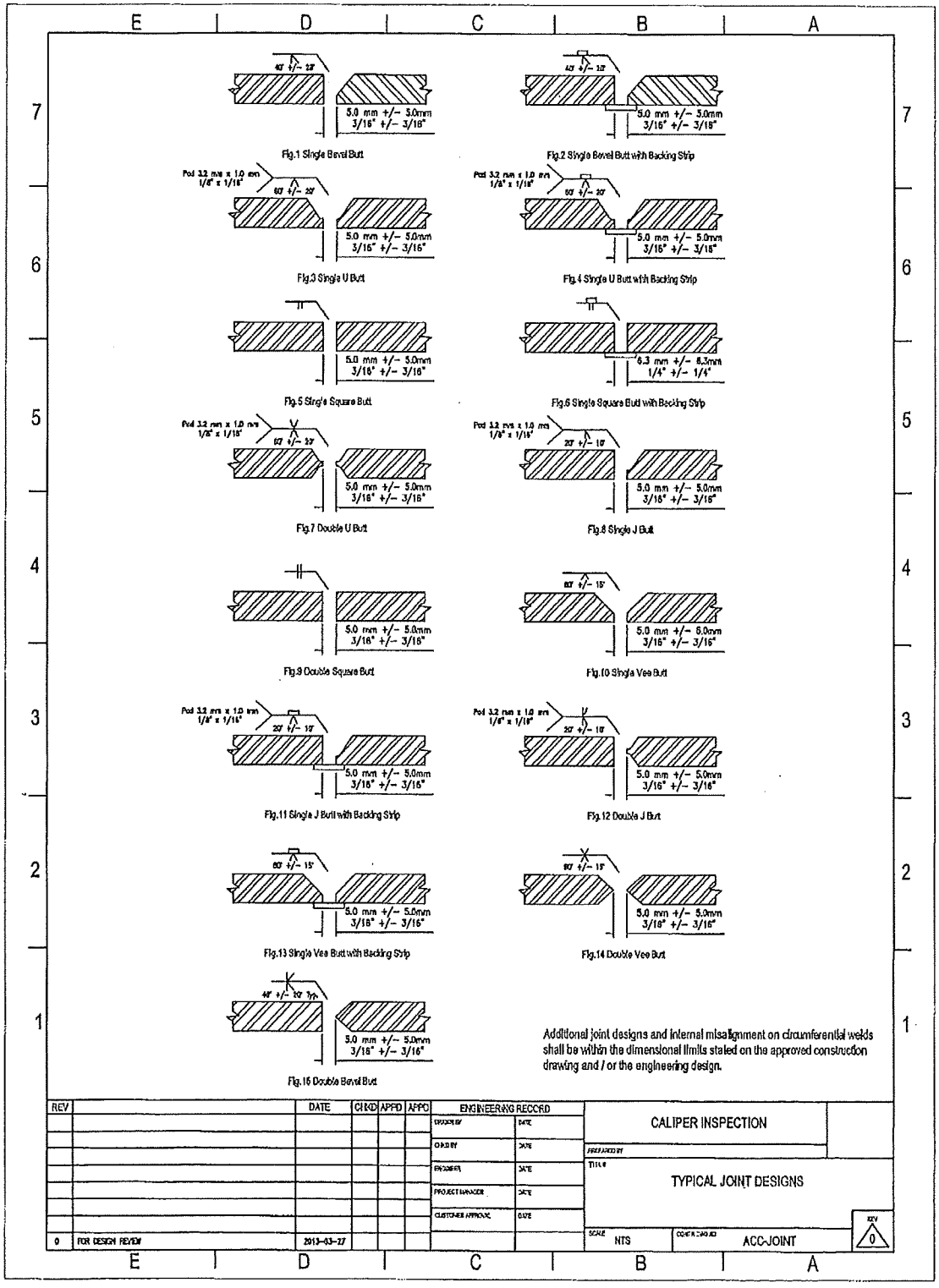

CIL # 20419-102-CS-01

TYPICAL JOINT DESIGN

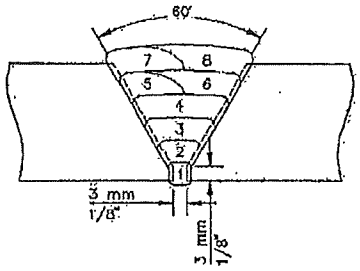

FIGURE 16

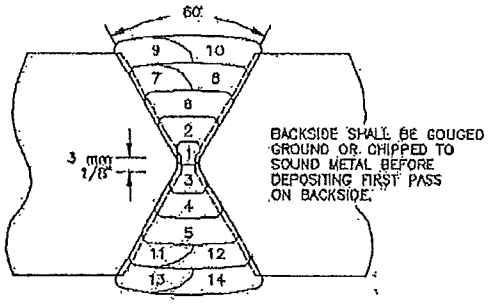

FIGURE 17

PREHEAT AND POST WELD HEAT TREATMENT

PREHEAT TEMPERATURE MINIMUM (PWHT)	
Section 1/VIII:	50° F minimum for all P1 materials except as listed below:
	o 175° F, if the joint thickness exceeds 1.000" and the specified carbon content exceeds 0.30%
	o 200° F, if the normal thickness is 1.250 or thicker
B31.1:	50° F minimum for all P1 materials except as listed below:
	o 200°F, if the nominal thickness of either of the base metals exceeds 1.000"
B31.3:	50° F minimum for all P1 materials except as listed below:
	o 175° F, if the specified minimum tensile strength of the base material exceeds 71 ksi

Reference to relevant construction codes is mandatory prior to production welding to determine any supplementary restrictions.

QW-483 PROCEDURE QUALIFICATION RECORDS (PQR)

(See QW-200.2, Section IX, ASME Boiler and Pressure Vessel Code)

Record Actual Variables Used to Weld Test Coupon

Company Name:	5Blue Process Equipment Inc.		
Procedure Qualification Record No.:	5B-106AW-1	**Date:**	March 10, 2011
WPS No.:	5B-106AW		
Welding Process(es):	GMAW / SMAW / SAW		
Types (Manual, Automatic, Semi-Automatic):	Semi-Automatic / Manual		

Joints (QW-420)

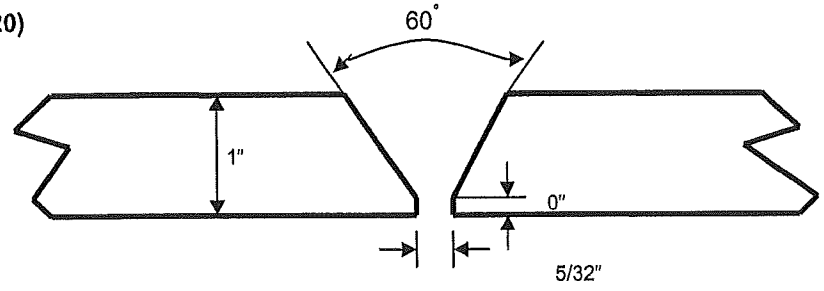

Groove Design of Test Coupon

(For combination qualifications, the deposited weld metal thickness shall be recorded for each filler metal and process used.)

BASE METALS (QW-403)

Material Spec.:	SA-516						
Type/Grade, or UNS Number:	Grade 60/70 Dual Rated						
P-No.:	1	**Group No.:**	1	to	**P-No.:**	1	**Group No.:** 2
Thickness of Test Coupon:	1"						
Diameter of Test Coupon:	Plate						
Maximum Pass Thickness:	0.125"						
Heat No.:	335707						
Other:	Carbon Equivalent .39						

FILLER METALS (QW-404)			
	1 – GMAW	**2 – SMAW**	**3 - SAW**
SFA Specification:	5.18	5.1	5.17
AWS Classification:	ER70S-6	E7018-1	EM14K
Filler Metal F-No.:	6	4	6
Weld Metal Analysis A-No.:	1	1	1
Size of Filler Metal:	0.035"	3.16"	5/32"
Filler Metal Product Form:	Solid Wire	Coated Electrode	Solid Wire
Supplemental Filler Metal:	N/A	N/A	None
Electrode Flux Classification:	N/A	N/A	F7A8-EM14K-H8
Flux Type:	N/A	N/A	Neutral
Weld Metal Thickness:	0.100"	0.100"	0.800"
Other: Brand	Blueshield	Blueshield	Lincoln LA-71/880M

POSITIONS (QW-405)	
Position of Groove:	3G for GMAW, 1G for SMAW and SAW
Welding Progression (Uphill, Downhill):	Downhill
Other:	N/A

PREHEAT (QW-406)	
Preheat Temperature:	50° F
Inter-pass Temperature:	550° F Maximum
Other:	N/A

POSTWELD HEAT TREATMENT (QW-407)	
Temperature:	N/A
Time:	N/A
Other:	N/A

GAS (QW-408)			
	Gas(es)	**Percent Composition (Mixture)**	**Flow Rate**
Shielding:	SFA 5.32; SG-AC-25	75% / 25%	30 scfh
Trailing:	N/A		
Backing:	N/A		
Other:	N/A		

ELECTRICAL CHARACTERISTICS (QW-409)			
Current:		Direct	
Polarity:		Reverse	
Amps:	92 to 725	**Volts:**	18 to 33.4
Tungsten Electrode Size:		N/A	
Mode of Metal Transfer for GMAW (FCAW):		Short Circuit	
Heat Input:		59,474 Joules/Inch	
Other:		N/A	

TECHNIQUE (QW-410)	
Travel Speed:	3.2 to 22.3 ipm
String or Weave Bead:	String and Weave
Oscillation:	N/A
Multi-pass or Single Pass (Per Side):	Multi-pass
Single or Multiple Electrodes:	Single
Other:	N/A

QW-483 (Back)
TENSILE TEST (QW-150)

Specimen No (In.)	Width (In.)	Thickness (In.)	Area ($In.^2$)	Ultimate Total Load (lbs.)	Ultimate Unit Stress, (psi)	Type of Failure and Location
CM-T1	0.725	1.023	0.742	57,662	77,500	Ductile Parent
CM-T2	0.725	1.017	0.737	57,645	78,000	Ductile Parent

GUIDED-BEND TESTS (QW-160)	
TYPE and FIGURE NO.	**RESULT**
Side Bend QW – 462.2	Pass
Side Bend QW – 462.2	Pass
Side Bend QW – 462.2	Pass
Side Bend QW – 462.2	Pass

TOUGHNESS TESTS (QW-170)

Specimen No.	Notch Location	Specimen Size (mm)	Test Temperature	Impact Values			Drop Weight Break (Y/N)
				Ft-lb or J	% Shear	Mils (in.)	
1	Weld	10 x 10	- 50° F	96	40		
2	Weld	10 x 10	- 50° F	82	40		
3	Weld	10 x 10	- 50° F	87	40		
4	HAZ P1	10 x 10	- 50° F	103	70		
5	HAZ P1	10 x 10	- 50° F	126	80		
6	HAZ P1	10 x 10	- 50° F	37	20		

Comments:

FILLET-WELD TEST (QW-180)

Result – Satisfactory: Yes N/A No N/A **Penetration into Parent Metal:** Yes N/A No N/A

Macro – Results: N/A

Other Tests

Type of Test: Hardness – Vickers 1 KG – See Attached

Deposit Analysis:

Other: N/A

Welder's Name: Robert Klassen **Clock:** W-14037 **Stamp No.:** "CM"

Tests Conducted By: Qualimet Inc. **Laboratory Test No.:** 1111-11006

We re-certify that the statements in this record, as revised, are correct and that the test welds were prepared, welded and tested in accordance with Section IX of the ASME Boiler and Pressure Vessel Code.

Manufacturer or Contractor: 5Blue Process Equipment Inc.

Date: October 21, 2013 **Certified By:** Joelle Dery-Brochu

• 7617 CORONET ROAD, EDMONTON, AB T6E 4N7 • (780) 469-5870 • FAX (780) 485-5829
• CALGARY (403) 278-9362 • 1-800-621-8979 • www.qualimetinc.com
"Your source of Quality Materials Engineering"

MECHANICAL TEST REPORT

for Procedure Qualification Record # 5B-106 AW-1

Client :	5Blue Process Equipment Inc.	**Job Number:**	1111-11006
Address:	2303-8th Street, Nisku AB, T9E 7Z1	**Date:**	March 10, 2011
Materials:	SA-516 Gr. 60/70		
Size:	1.000" thick plate	**Condition:**	As Welded
Test Specification:	ASME Section IX		

Tensile Tests QW-462.1(a)

Sample Identification:	CM-T1	CM-T2
Sample Size - inch: (W x T)	0.725 x 1.023	0.725 x 1.017
Least X-Sect. Area - in²:	0.742	0.737
Ultimate Load - lbs:	57 662	57 645
Ult. Ten. Strength - ksi:	77.5	78.0
Character of Failure:	Ductile	Ductile
Location of Failure:	Base Metal	Base Metal
Req'd Tensile Strength - ksi:	70.0	70.0
Pass or Fail:	Pass	Pass
Remarks:	-----	----

Bend Tests QW-462.2

Sample Identification:	CM-B1	CM-B2	CM-B3	CM-B4
*Type of Bend Test:	TSB	TSB	TSB	TSB
Pass or Fail:	Pass	Pass	Pass	Pass
Remarks:	----	----	----	----

*Types of Bend Tests TSB, TFB, TRB = transverse side, face or root bend LSB, LFB, LRB = longitudinal side, face or root bend

We certify that the statements in this record are acceptable, in accordance with the requirements of ASME Section IX.

TEST RESULTS CERTIFIED BY: Qualimet

John Milner, E.I.T.

• 7817 CORONET ROAD, EDMONTON, AB T6E 4N7 • (780) 469-5670 • FAX (780) 465-5829
• CALGARY (403) 278-9862 • 1-800-621-8979 • www.qualimetinc.com
"Your source of Quality Materials Engineering"

CHARPY IMPACT TEST REPORT

for Procedure Qualification Record # 5B-106 AW-1

Client:	5Blue Process Equipment Inc.	**Job Number:**	1111-11006
Address:	2303-8th Street, Nisku AB, T9E 7Z1	**Date:**	March 10, 2011
Materials:	SA-516 Gr. 60/70		
Size:	1.000" thick plate	**Condition:**	As Welded
Test Specification:	**ASME Section IX**		

Specimen Type:	Charpy V-Notch
Qualification Temperature:	-50°F

Specimen Size (mm): 10

Sample Set	Sample Number	Actual Impact Energy (ft-lb)	Full Size (ft-lb)	Shear (%)	Lateral Expansion Inches
Weld	CM-1	96	96	40	0.073
	CM-2	82	82	40	0.062
	CM-3	87	87	40	0.065
	Average:	**88**	**88**	**40**	**0.067**

We certify that the statements in this record are acceptable and that the specimen(s) were prepared and tested in accordance with the requirements of the current edition of ASME Section IX and the latest addenda.

TEST RESULTS CERTIFIED BY: Qualimet

John Milner, E.I.T.

• 7817 CORONET ROAD, EDMONTON, AB T6E 4N7 • (780) 469-5370 • FAX (780) 466-8829
• CALGARY (403) 278-9882 • 1-800-621-8979 • www.qualimetinc.com
"Your source of Quality Materials Engineering"

CHARPY IMPACT TEST REPORT

for Procedure Qualification Record # 5B-106 AW-1

Client:	5Blue Process Equipment Inc.	**Job Number:**	1111-11006
Address:	2303-8th Street, Nisku AB, T9E 7Z1	**Date:**	March 10, 2011
Materials:	SA-516 Gr. 60/70		
Size:	1.000" thick plate	**Condition:**	As Welded
Test Specification:	**ASME Section IX**		

Specimen Type:	Charpy V-Notch
Qualification Temperature:	-50°F

Specimen Size (mm): 10

Sample Set	Sample Number	Actual Impact Energy (ft-lb)	Full Size (ft-lb)	Shear (%)	Lateral Expansion Inches
HAZ	CM-4	103	103	70	0.078
	CM-5	126	126	80	0.086
	CM-6	37	37	20	0.028
	Average:	**89**	**89**	**57**	**0.064**

We certify that the statements in this record are acceptable and that the specimen(s) were prepared and tested in accordance with the requirements of the current edition of ASME Section IX and the latest addenda.

TEST RESULTS CERTIFIED BY: Qualimet

John Milner, E.I.T.

• 7817 CORONET ROAD, EDMONTON, AB T6E 4N7 • (780) 469-5870 • FAX (780) 465-5829
• CALGARY (403) 278-9862 • 1-800-621-6979 • www.qualimetinc.com
"Your source of Quality Materials Engineering"

VICKERS HARDNESS TEST REPORT

for Procedure Qualification Record # 5B-106 AW-1

Client:	5Blue Process Equipment Inc.	**Job Number:**	1111-11006
Address:	2303-8th Street, Nisku AB, T9E 7Z1	**Date:**	March 10, 2011
Materials:	SA-516 Gr. 60/70		
Size:	1.000" thick plate	**Condition:**	As Welded
Test Pattern:	NACE RP-0472 Test Pattern		

Test Method:	Hardness testing performed in accordance with ASTM E-92 (Vickers Hardness of Metallic Materials) using a Vickers tester with a 1 kg load

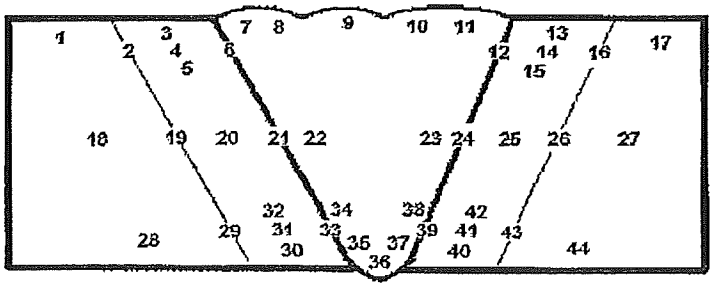

Vickers Hardness Values

1	160	10	213	19	153	28	163	37	159
2	168	11	226	20	173	29	167	38	158
3	171	12	209	21	177	30	175	39	170
4	177	13	181	22	189	31	165	40	168
5	185	14	184	23	203	32	174	41	163
6	207	15	204	24	192	33	153	42	171
7	197	16	184	25	176	34	180	43	150
8	201	17	148	26	182	35	166	44	159
9	203	18	151	27	159	36	167		

We certify that the statements in this record are acceptable, in accordance with the requirements of NACE RP 0472. RP 0472-2005 paragraph 5.3 states "The maximum allowable HAZ hardness shall be 248 HV the maximum weld deposit hardness should be 248 HV and the average weld deposit hardness should not exceed 210 HV"

TEST RESULTS CERTIFIED BY: Qualimet

John Milner, E.I.T.

Qualimet Inc.

Certified by Canadian Welding Bureau & Transport Canada & Authorized Welder Test Facility
ESTABLISHED 1973

11

QW-483 PROCEDURE QUALIFICATION RECORDS (PQR)

(See QW-200.2, Section IX, ASME Boiler and Pressure Vessel Code)

Record Actual Variables Used to Weld Test Coupon

Company Name:	5Blue Process Equipment Inc.		
Procedure Qualification Record No.:	5B-106AW-2	**Date:**	March 10, 2011
WPS No.:	5B-106AW		
Welding Process(es):	GMAW / SMAW / SAW		
Types (Manual, Automatic, Semi-Automatic):	Semi-Automatic / Manual		

Joints (QW-420)

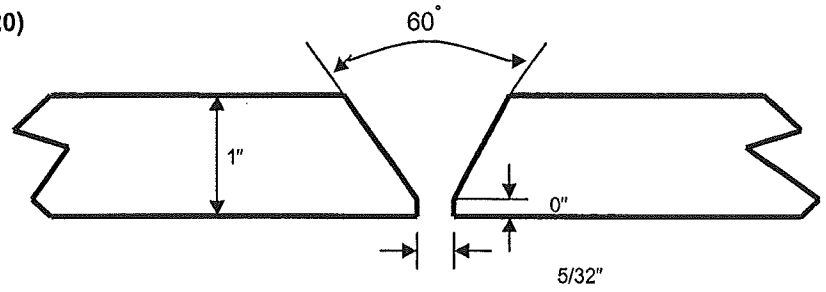

Groove Design of Test Coupon

(For combination qualifications, the deposited weld metal thickness shall be recorded for each filler metal and process used.)

BASE METALS (QW-403)							
Material Spec.:	SA-516						
Type/Grade, or UNS Number:	Grade 60/70 Dual Rated						
P-No.:	1	**Group No.:**	1	to	**P-No.:**	1	**Group No.:** 2
Thickness of Test Coupon:	1"						
Diameter of Test Coupon:	Plate						
Maximum Pass Thickness:	0.125"						
Heat No.:	335707						
Other:	Carbon Equivalent .39						

FILLER METALS (QW-404)			
	1 – GMAW	2 – SMAW	3 - SAW
SFA Specification:	5.18	5.1	5.17
AWS Classification:	ER70S-6	E7018-1	EM14K
Filler Metal F-No.:	6	4	6
Weld Metal Analysis A-No.:	1	1	1
Size of Filler Metal:	0.035"	3.16"	5/32"
Filler Metal Product Form:	Solid Wire	Coated Electrode	Solid Wire
Supplemental Filler Metal:	N/A	N/A	None
Electrode Flux Classification:	N/A	N/A	F7A8-EM14K-H8
Flux Type:	N/A	N/A	Neutral
Weld Metal Thickness:	0.100"	0.100"	0.800"
Other: Brand	Blueshield	Blueshield	Lincoln LA-71/880M

POSITIONS (QW-405)	
Position of Groove:	3G for GMAW, 1G for SMAW and SAW
Welding Progression (Uphill, Downhill):	Downhill
Other:	N/A

PREHEAT (QW-406)	
Preheat Temperature:	50° F
Inter-pass Temperature:	550° F Maximum
Other:	N/A

POSTWELD HEAT TREATMENT (QW-407)	
Temperature:	N/A
Time:	N/A
Other:	N/A

GAS (QW-408)			
	Gas(es)	**Percent Composition (Mixture)**	**Flow Rate**
Shielding:	SFA 5.32; SG-AC-25	75% / 25%	30 scfh
Trailing:	N/A		
Backing:	N/A		
Other:	N/A		

ELECTRICAL CHARACTERISTICS (QW-409)			
Current:		Direct	
Polarity:		Reverse	
Amps:	90 to 770	**Volts:**	17.7 to 33.2
Tungsten Electrode Size:		N/A	
Mode of Metal Transfer for GMAW (FCAW):		Short Circuit	
Heat Input:		69,878 Joules/Inch	
Other:		N/A	

TECHNIQUE (QW-410)	
Travel Speed:	3.1 to 23.4 ipm
String or Weave Bead:	String and Weave
Oscillation:	N/A
Multi-pass or Single Pass (Per Side):	Multi-pass
Single or Multiple Electrodes:	Single
Other:	N/A

QW-483 (Back)
TENSILE TEST (QW-150)

Specimen No (In.)	Width (In.)	Thickness (In.)	Area ($In.^2$)	Ultimate Total Load (lbs.)	Ultimate Unit Stress, (psi)	Type of Failure and Location
CN-T1	0.733	1.019	0.747	59,277	79,000	Ductile Parent
CN-T2	0.724	1.023	0.741	58,394	79,000	Ductile Parent

GUIDED-BEND TESTS (QW-160)

TYPE and FIGURE NO.	RESULT
Side Bend QW – 462.2	Pass
Side Bend QW – 462.2	Pass
Side Bend QW – 462.2	Pass
Side Bend QW – 462.2	Pass

TOUGHNESS TESTS (QW-170)

Specimen No.	Notch Location	Specimen Size (mm)	Test Temperature	Impact Values			Drop Weight Break (Y/N)
				Ft-lb or J	% Shear	Mils (in.)	
1	Weld	10 x 10	- 50° F	112	50		
2	Weld	10 x 10	- 50° F	77	40		
3	Weld	10 x 10	- 50° F	20	20		
4	HAZ P1	10 x 10	- 50° F	10	10		
5	HAZ P1	10 x 10	- 50° F	28	20		
6	HAZ P1	10 x 10	- 50° F	20	20		

Comments:

FILLET-WELD TEST (QW-180)

Result – Satisfactory: Yes N/A No N/A **Penetration into Parent Metal:** Yes N/A No N/A

Macro – Results: N/A

Other Tests

Type of Test: Hardness – Vickers 1 KG – See Attached

Deposit Analysis:

Other: N/A

Welder's Name: Robert Klassen **Clock:** W-14037 **Stamp No.:** "CN"

Tests Conducted By: Qualimet Inc. **Laboratory Test No.:** 1111-11006

We re-certify that the statements in this record, as revised, are correct and that the test welds were prepared, welded and tested in accordance with Section IX of the ASME Boiler and Pressure Vessel Code.

Manufacturer or Contractor: 5Blue Process Equipment Inc.

Date: October 21, 2013 **Certified By:** Joelle Dery-Brochu

• 7817 CORONET ROAD, EDMONTON, AB T8E 4N7 • (780) 469-5870 • FAX (780) 465-5829
• CALGARY (403) 278-9862 • 1-800-621-8979 • www.qualimetinc.com
"Your source of Quality Materials Engineering"

MECHANICAL TEST REPORT

for Procedure Qualification Record # 5B-106 AW-2

Client:	5Blue Process Equipment Inc.	**Job Number:**	1111-11006
Address:	2303-8th Street, Nisku AB, T9E 7Z1	**Date:**	March 10, 2011
Materials:	SA-516 Gr. 60/70		
Size:	1.000" thick plate	**Condition:**	As Welded
Test Specification:	ASME Section IX		

Tensile Tests QW-462.1(a)

Sample Identification:	CN-T1	CN-T2
Sample Size - inch (W x T)	0.733 x 1.019	0.724 x 1.023
Least X-Sect. Area - in²:	0.747	0.741
Ultimate Load - lbs:	59 277	58 394
Ult. Ten. Strength - ksi:	79.0	79.0
Character of Failure:	Ductile	Ductile
Location of Failure:	Base Metal	Base Metal
Req'd Tensile Strength - ksi:	70.0	70.0
Pass or Fail:	Pass	Pass
Remarks:	----	----

Bend Tests QW-462.2

Sample Identification:	CN-B1	CN-B2	CN-B3	CN-B4
*Type of Bend Test:	TSB	TSB	TSB	TSB
Pass or Fail:	Pass	Pass	Pass	Pass
Remarks:	----	----	----	----

*Types of Bend Tests TSB, TFB, TRB = transverse side, face or root bend LSB, LFB, LRB = longitudinal side, face or root bend

We certify that the statements in this record are acceptable, in accordance with the requirements of ASME Section IX.

TEST RESULTS CERTIFIED BY: Qualimet

John Milner, E.I.T.

• 7817 CORONET ROAD, EDMONTON, AB T6E 4N7 • (780) 469-5870 • FAX (780) 465-5829
• CALGARY (403) 278-9862 • 1-800-621-8979 • www.qualimetinc.com
"Your source of Quality Materials Engineering"

CHARPY IMPACT TEST REPORT

for Procedure Qualification Record # 5B-106 AW-2

Client:	5Blue Process Equipment Inc.	**Job Number:**	1111-11006
Address:	2303-6th Street, Nisku AB, T9E 7Z1	**Date:**	March 10, 2011
Materials:	SA-516 Gr. 60/70		
Size:	1.000" thick plate	**Condition:**	As Welded
Test Specification:	ASME Section IX		

Specimen Type:	Charpy V-Notch
Qualification Temperature:	-50°F

Specimen Size (mm): 10

Sample Set	Sample Number	Actual Impact Energy (ft-lb)	Full Size (ft-lb)	Shear (%)	Lateral Expansion Inches
Weld	CN-1	112	112	50	0.098
	CN-2	77	77	40	0.066
	CN-3	20	20	20	0.016
	Average:	**70**	**70**	**37**	**0.059**

We certify that the statements in this record are acceptable and that the specimen(s) were prepared and tested in accordance with the requirements of the current edition of ASME Section IX and the latest addenda.

TEST RESULTS CERTIFIED BY: Qualimet

John Milner, E.I.T.

• 7617 CORONET ROAD, EDMONTON, AB T6E 4N7 • (780) 469-5870 • FAX (780) 465-5829
• CALGARY (403) 278-9862 • 1-800-621-8979 • www.qualimetinc.com
"Your source of Quality Materials Engineering"

CHARPY IMPACT TEST REPORT

for Procedure Qualification Record # 5B-106 AW-2

Client :	5Blue Process Equipment Inc.	**Job Number:**	1111-11006
Address:	2303-8th Street, Nisku AB, T9E 7Z1	**Date:**	March 10, 2011
Materials:	SA-516 Gr. 60/70		
Size:	1.000" thick plate	**Condition:**	As Welded
Test Specification:	ASME Section IX		

Specimen Type:	Charpy V-Notch
Qualification Temperature:	-50°F

Specimen Size (mm): 10

Sample Set	Sample Number	Actual Impact Energy (ft-lb)	Full Size (ft-lb)	Shear (%)	Lateral Expansion Inches
HAZ	CN-4	10	10	10	0.013
	CN-5	28	28	20	0.028
	CN-6	20	20	20	0.017
	Average:	**19**	**19**	**17**	**0.019**

We certify that the statements in this record are acceptable and that the specimen(s) were prepared and tested in accordance with the requirements of the current edition of ASME Section IX and the latest addenda.

TEST RESULTS CERTIFIED BY: Qualimet

John Milner, E.I.T.

• 7817 CORONET ROAD, EDMONTON, AB T6E 4N7 • (780) 469-5870 • FAX (780) 465-5829
• CALGARY (403) 278-9882 • 1-800-621-8979 • www.qualimetinc.com
"Your source of Quality Materials Engineering"

VICKERS HARDNESS TEST REPORT

for Procedure Qualification Record # 5B-106 AW-2

Client:	5Blue Process Equipment Inc.	**Job Number:**	1111-11006
Address:	2303-8th Street, Nisku AB, T9E 7Z1	**Date:**	March 10, 2011
Materials:	SA-516 Gr. 60/70		
Size:	1.000" thick plate	**Condition:**	As Welded
Test Pattern:	NACE RP-0472 Test Pattern		

Test Method:	Hardness testing performed in accordance with ASTM E-92 (Vickers Hardness of Metallic Materials) using a Vickers tester with a 1 kg load

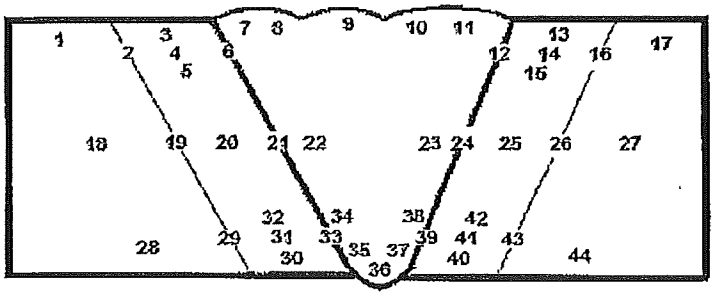

Vickers Hardness Values

1	149	10	224	19	165	28	158	37	189
2	161	11	203	20	178	29	165	38	172
3	178	12	223	21	181	30	177	39	162
4	191	13	199	22	176	31	176	40	175
5	187	14	205	23	199	32	174	41	179
6	200	15	217	24	196	33	192	42	163
7	207	16	178	25	183	34	148	43	178
8	197	17	159	26	176	35	201	44	168
9	200	18	156	27	153	36	189		

We certify that the statements in this record are acceptable, in accordance with the requirements of NACE RP 0472. RP 0472-2005 paragraph 5.3 states "The maximum allowable HAZ hardness shall be 248 HV the maximum weld deposit hardness should be 248 HV and the average weld deposit hardness should not exceed 210 HV"

TEST RESULTS CERTIFIED BY: Qualimet

John Milner, E.I.T.

Qualimet Inc.

Certified by Canadian Welding Bureau & Transport Canada & Authorized Welder Test Facility
ESTABLISHED 1973

17

QW-483 PROCEDURE QUALIFICATION RECORDS (PQR)

(See QW-200.2, Section IX, ASME Boiler and Pressure Vessel Code)

Record Actual Variables Used to Weld Test Coupon

Company Name:	5Blue Process Equipment Inc.		
Procedure Qualification Record No.:	5B-106AW-3	**Date:**	March 10, 2011
WPS No.:	5B-106AW		
Welding Process(es):	GMAW / SMAW / SAW		
Types (Manual, Automatic, Semi-Automatic):	Semi-Automatic / Manual		

Joints (QW-420)

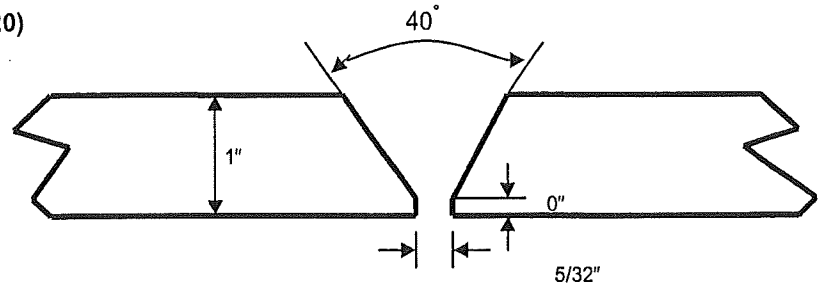

Groove Design of Test Coupon

(For combination qualifications, the deposited weld metal thickness shall be recorded for each filler metal and process used.)

BASE METALS (QW-403)

Material Spec.:	SA-516						
Type/Grade, or UNS Number:	Grade 60/70 Dual Rated						
P-No.:	1	**Group No.:**	1	to **P-No.:**	1	**Group No.:**	2
Thickness of Test Coupon:	1"						
Diameter of Test Coupon:	Plate						
Maximum Pass Thickness:	0.125"						
Heat No.:	335707						
Other:	Carbon Equivalent .39						

FILLER METALS (QW-404)			
	1 – GMAW	2 – SMAW	3 - SAW
SFA Specification:	5.18	5.1	5.17
AWS Classification:	ER70S-6	E7018-1	EM14K
Filler Metal F-No.:	6	4	6
Weld Metal Analysis A-No.:	1	1	1
Size of Filler Metal:	0.035"	3/16"	5/32"
Filler Metal Product Form:	Solid Wire	Coated Electrode	Solid Wire
Supplemental Filler Metal:	N/A	N/A	None
Electrode Flux Classification:	N/A	N/A	F7A8-EM14K-H8
Flux Type:	N/A	N/A	Neutral
Weld Metal Thickness:	0.100"	0.100"	0.800"
Other: Brand	Blueshield	Blueshield	Lincoln LA-71/880M

POSITIONS (QW-405)	
Position of Groove:	3G for GMAW, 1G for SMAW and SAW
Welding Progression (Uphill, Downhill):	Downhill
Other:	N/A

PREHEAT (QW-406)	
Preheat Temperature:	50° F
Inter-pass Temperature:	550° F Maximum
Other:	N/A

POSTWELD HEAT TREATMENT (QW-407)	
Temperature:	N/A
Time:	N/A
Other:	N/A

GAS (QW-408)			
	Gas(es)	**Percent Composition (Mixture)**	**Flow Rate**
Shielding:	SFA 5.32; SG-AC-25	75% / 25%	30 scfh
Trailing:	N/A		
Backing:	N/A		
Other:	N/A		

ELECTRICAL CHARACTERISTICS (QW-409)			
Current:		Direct – GMAW / SMAW, AC-SAW	
Polarity:		Reverse – GMAW / SMAW	
Amps:	105 to 729	**Volts:**	17.2 to 34
Tungsten Electrode Size:		N/A	
Mode of Metal Transfer for GMAW (FCAW):		Short Circuit	
Heat Input:		62,105 Joules/Inch	
Other:		N/A	

TECHNIQUE (QW-410)	
Travel Speed:	3.2 to 23.3 ipm
String or Weave Bead:	String and Weave
Oscillation:	N/A
Multi-pass or Single Pass (Per Side):	Multi-pass
Single or Multiple Electrodes:	Single – GMAW / SMAW, Tandem - SAW
Other:	N/A

QW-483 (Back)
TENSILE TEST (QW-150)

Specimen No (In.)	Width (In.)	Thickness (In.)	Area ($In.^2$)	Ultimate Total Load (lbs.)	Ultimate Unit Stress, (psi)	Type of Failure and Location
CO-T1	0.725	1.036	0.751	58,226	77,500	Ductile Parent
CO-T2	0.715	1.026	0.734	57,586	78,500	Ductile Parent

GUIDED-BEND TESTS (QW-160)	
TYPE and FIGURE NO.	**RESULT**
Side Bend QW – 462.2	Pass
Side Bend QW – 462.2	Pass
Side Bend QW – 462.2	Pass
Side Bend QW – 462.2	Pass

TOUGHNESS TESTS (QW-170)

Specimen No.	Notch Location	Specimen Size (mm)	Test Temperature	Impact Values			Drop Weight Break (Y/N)
				Ft-lb or J	% Shear	Mils (in.)	
1	Weld	10 x 10	- 50° F	96	50		
2	Weld	10 x 10	- 50° F	78	40		
3	Weld	10 x 10	- 50° F	93	50		
4	HAZ P1	10 x 10	- 50° F	112	80		
5	HAZ P1	10 x 10	- 50° F	22	20		
6	HAZ P1	10 x 10	- 50° F	51	30		

Comments:

FILLET-WELD TEST (QW-180)

Result – Satisfactory: Yes N/A No N/A **Penetration into Parent Metal:** Yes N/A No N/A

Macro – Results: N/A

Other Tests

Type of Test: Hardness – Vickers 1 KG – See Attached

Deposit Analysis: Delta – Ferrite – See Attached

Other: N/A

Welder's Name: Robert Klassen **Clock:** W-14037 **Stamp No.:** "CO"

Tests Conducted By: Qualimet Inc. **Laboratory Test No.:** 1111-11006

We re-certify that the statements in this record, as revised, are correct and that the test welds were prepared, welded and tested in accordance with Section IX of the ASME Boiler and Pressure Vessel Code.

Manufacturer or Contractor: 5Blue Process Equipment Inc.

Date: October 21, 2013 **Certified By:** Joelle Dery-Brochu

• 7817 CORONET ROAD, EDMONTON, AB T6E 4N7 • (780) 469-5870 • FAX (780) 465-5828
• CALGARY (403) 278-9862 • 1-800-621-8979 • www.qualimetinc.com
"Your source of Quality Materials Engineering"

MECHANICAL TEST REPORT

for Procedure Qualification Record # 5B-106 AW-3

Client:	5Blue Process Equipment Inc.	**Job Number:**	1111-11006
Address:	2303-8th Street, Nisku AB, T9E 7Z1	**Date:**	March 10, 2011
Materials:	SA-516 Gr. 60/70		
Size:	1.000" thick plate	**Condition:**	As Welded
Test Specification:	ASME Section IX		

Tensile Tests QW-462.1(a)

Sample Identification:	CO-T1	CO-T2
Sample Size - inch: (W x T)	0.725 x 1.036	0.716 x 1.028
Least X-Sect. Area - in^2:	0.751	0.734
Ultimate Load - lbs:	58 226	57 586
Ult. Ten. Strength - ksi:	77.6	78.5
Character of Failure:	Ductile	Ductile
Location of Failure:	Base Metal	Base Metal
Req'd Tensile Strength - ksi:	70.0	70.0
Pass or Fail:	Pass	Pass
Remarks:	-----	-----

Bend Tests QW-462.2

Sample Identification:	CO-B1	CO-B2	CO-B3	CO-B4
***Type of Bend Test:**	TSB	TSB	TSB	TSB
Pass or Fail:	Pass	Pass	Pass	Pass
Remarks:	-----	-----	-----	-----

*Types of Bend Tests TSB, TFB, TRB = transverse side, face or root bend LSB, LFB, LRB = longitudinal side, face or root bend

We certify that the statements in this record are acceptable, in accordance with the requirements of ASME Section IX.

TEST RESULTS CERTIFIED BY: Qualimet

John Milner, E.I.T.

• 7817 CORONET ROAD, EDMONTON, AB T6E 4N7 • (780) 469-5870 • FAX (780) 465-5829
• CALGARY (403) 278-9862 • 1-800-621-8979 • www.qualimetinc.com
"Your source of Quality Materials Engineering"

CHARPY IMPACT TEST REPORT

for Procedure Qualification Record # 5B-106 AW-3

Client :	5Blue Process Equipment Inc.	**Job Number:**	1111-11006
Address:	2303-8th Street, Nisku AB, T9E 7Z1	**Date:**	March 10, 2011
Materials:	SA-516 Gr. 60/70		
Size:	1.000" thick plate	**Condition:**	As Welded
Test Specification:	ASME Section IX		

Specimen Type:	Charpy V-Notch
Qualification Temperature:	-50°F

Specimen Size (mm): 10

Sample Set	Sample Number	Actual Impact Energy (ft-lb)	Full Size (ft-lb)	Shear (%)	Lateral Expansion Inches
Weld	CO-1	96	96	50	0.083
	CO-2	78	78	40	0.065
	CO-3	93	93	50	0.077
	Average:	**89**	**89**	**47**	**0.075**

We certify that the statements in this record are acceptable and that the specimen(s) were prepared and tested in accordance with the requirements of the current edition of ASME Section IX and the latest addenda.

TEST RESULTS CERTIFIED BY: Qualimet

John Milner, E.I.T.

• 7817 CORONET ROAD, EDMONTON, AB T6E 4N7 • (780) 469-5870 • FAX (780) 465-5829
• CALGARY (403) 278-9862 • 1-800-621-8979 • www.qualimetinc.com
"Your source of Quality Materials Engineering"

CHARPY IMPACT TEST REPORT

for Procedure Qualification Record # 5B-106 AW-3

Client :	5Blue Process Equipment Inc.	**Job Number:**	1111-11006
Address:	2303-8th Street, Nisku AB, T9E 7Z1	**Date:**	March 10, 2011
Materials:	SA-516 Gr. 60/70		
Size:	1.000" thick plate	**Condition:**	As Welded
Test Specification:	**ASME Section IX**		

Specimen Type:	Charpy V-Notch
Qualification Temperature:	-50°F

Specimen Size (mm): 10

Sample Set	Sample Number	Actual Impact Energy (ft-lb)	Full Size (ft-lb)	Shear (%)	Lateral Expansion Inches
HAZ	CO-4	112	112	80	0.085
	CO-5	22	22	20	0.024
	CO-6	51	51	30	0.044
	Average:	**62**	**62**	**43**	**0.051**

We certify that the statements in this record are acceptable and that the specimen(s) were prepared and tested in accordance with the requirements of the current edition of ASME Section IX and the latest addenda.

TEST RESULTS CERTIFIED BY: Qualimet

John Milner, E.I.T.

• 7817 CORONET ROAD, EDMONTON, AB T6E 4N7 • (780) 469-5870 • FAX (780) 465-5829
• CALGARY (403) 278-9862 • 1-800-621-8979 • www.qualimetinc.com
"Your source of Quality Materials Engineering"

VICKERS HARDNESS TEST REPORT

for Procedure Qualification Record # 5B-106 AW-3

Client:	5Blue Process Equipment Inc.	**Job Number:**	1111-11006
Address:	2303-8th Street, Nisku AB, T9E 7Z1	**Date:**	March 10, 2011
Materials:	SA-516 Gr. 60/70		
Size:	1.000" thick plate	**Condition:**	As Welded
Test Pattern:	NACE RP-0472 Test Pattern		

Test Method:	Hardness testing performed in accordance with ASTM E-92 (Vickers Hardness of Metallic Materials) using a Vickers tester with a 1 kg load

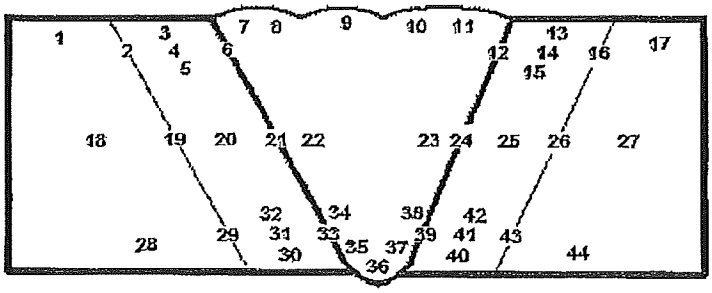

Vickers Hardness Values

1	164	10	217	19	167	28	157	37	162
2	181	11	200	20	223	29	169	38	156
3	235	12	199	21	196	30	175	39	170
4	231	13	201	22	193	31	179	40	172
5	213	14	214	23	194	32	176	41	173
6	223	15	199	24	217	33	161	42	175
7	225	16	174	25	166	34	173	43	171
8	188	17	165	26	171	35	168	44	157
9	193	18	159	27	150	36	161		

We certify that the statements in this record are acceptable, in accordance with the requirements of NACE RP 0472. RP 0472-2005 paragraph 5.3 states "The maximum allowable HAZ hardness shall be 248 HV the maximum weld deposit hardness should be 248 HV and the average weld deposit hardness should not exceed 210 HV"

TEST RESULTS CERTIFIED BY: Qualimet

John Milner, E.I.T.

QW-483 PROCEDURE QUALIFICATION RECORDS (PQR)

(See QW-200.2, Section IX, ASME Boiler and Pressure Vessel Code)

Record Actual Variables Used to Weld Test Coupon

Company Name:	5Blue Process Equipment Inc.		
Procedure Qualification Record No.:	5B-106AW-4	**Date:**	March 10, 2011
WPS No.:	5B-106AW		
Welding Process(es):	GMAW / SMAW / SAW		
Types (Manual, Automatic, Semi-Automatic):	Semi-Automatic / Manual / Automatic		

Joints (QW-420)

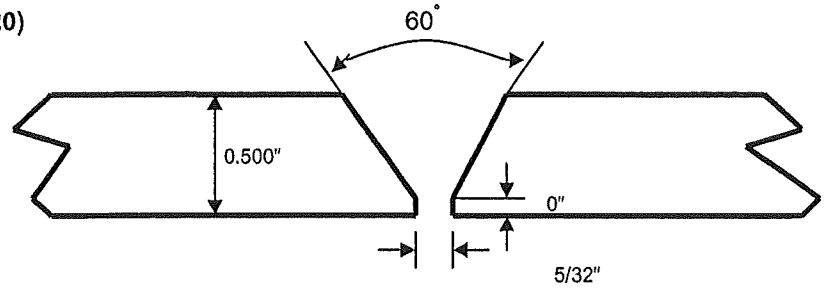

Groove Design of Test Coupon

(For combination qualifications, the deposited weld metal thickness shall be recorded for each filler metal and process used.)

BASE METALS (QW-403)							
Material Spec.:	SA-516						
Type/Grade, or UNS Number:	Grade 60/70 Dual Rated						
P-No.:	1	**Group No.:**	1	to **P-No.:**	1	**Group No.:**	2
Thickness of Test Coupon:	0.500"						
Diameter of Test Coupon:	Plate						
Maximum Pass Thickness:	0.180"						
Heat No.:	342671						
Other:	Carbon Equivalent .37						

FILLER METALS (QW-404)			
	1 – GMAW	2 – SMAW	3 - SAW
SFA Specification:	5.18	5.1	5.17
AWS Classification:	ER70S-6	E7018-1	EM14K
Filler Metal F-No.:	6	4	6
Weld Metal Analysis A-No.:	1	1	1
Size of Filler Metal:	0.035"	5/32"	3/32"
Filler Metal Product Form:	Solid Wire	Coated Electrode	Solid Wire
Supplemental Filler Metal:	N/A	N/A	None
Electrode Flux Classification:	N/A	N/A	F7A8-EM14K-H8
Flux Type:	N/A	N/A	Neutral
Weld Metal Thickness:	0.075"	0.075"	0.350"
Other: Brand	Blueshield	Blueshield	Lincoln LA-71/880M

POSITIONS (QW-405)	
Position of Groove:	3G for GMAW, 1G for SMAW and SAW
Welding Progression (Uphill, Downhill):	Downhill
Other:	N/A

PREHEAT (QW-406)	
Preheat Temperature:	50° F
Inter-pass Temperature:	550° F Maximum
Other:	N/A

POSTWELD HEAT TREATMENT (QW-407)	
Temperature:	N/A
Time:	N/A
Other:	N/A

GAS (QW-408)			
	Gas(es)	**Percent Composition (Mixture)**	**Flow Rate**
Shielding:	SFA 5.32; SG-AC-25	75% / 25%	30 scfh
Trailing:	N/A		
Backing:	N/A		
Other:	N/A		

ELECTRICAL CHARACTERISTICS (QW-409)			
Current:		Direct – GMAW / SMAW, AC-SAW	
Polarity:		Reverse – GMAW / SMAW	
Amps:	85 to 610	**Volts:**	17.8 to 32
Tungsten Electrode Size:		N/A	
Mode of Metal Transfer for GMAW (FCAW):		Short Circuit	
Heat Input:		52,155 Joules/Inch	
Other:		N/A	

TECHNIQUE (QW-410)	
Travel Speed:	4 to 25.4 ipm
String or Weave Bead:	String
Oscillation:	N/A
Multi-pass or Single Pass (Per Side):	Multi-pass
Single or Multiple Electrodes:	Single – GMAW / SMAW, Tandem - SAW
Other:	N/A

QW-483 (Back)
TENSILE TEST (QW-150)

Specimen No (In.)	Width (In.)	Thickness (In.)	Area ($In.^2$)	Ultimate Total Load (lbs.)	Ultimate Unit Stress, (psi)	Type of Failure and Location

GUIDED-BEND TESTS (QW-160)	
TYPE and FIGURE NO.	**RESULT**

TOUGHNESS TESTS (QW-170)

Specimen No.	Notch Location	Specimen Size (mm)	Test Temperature	Impact Values			Drop Weight Break (Y/N)
				Ft-lb or J	% Shear	Mils (in.)	
1	Weld	10 x 10	- 50° F	114	70		
2	Weld	10 x 10	- 50° F	24	30		
3	Weld	10 x 10	- 50° F	134	70		
4	HAZ P1 Gr1/2	10 x 10	- 50° F	183	100		
5	HAZ P1 Gr1/2	10 x 10	- 50° F	164	100		
6	HAZ P1 Gr1/2	10 x 10	- 50° F	130	70		

Comments:

FILLET-WELD TEST (QW-180)

Result – Satisfactory: Yes N/A No N/A **Penetration into Parent Metal:** Yes N/A No N/A

Macro – Results: N/A

Other Tests

Type of Test:

Deposit Analysis:

Other:

Welder's Name: Robert Klassen **Clock:** W-14037 **Stamp No.:** "CR"

Tests Conducted By: Qualimet Inc. **Laboratory Test No.:** 1111-11006

We re-certify that the statements in this record, as revised, are correct and that the test welds were prepared, welded and tested in accordance with Section IX of the ASME Boiler and Pressure Vessel Code.

Manufacturer or Contractor: 5Blue Process Equipment Inc.

Date: October 21, 2013 **Certified By:** Joelle Dery-Brochu

• 7617 CORONET ROAD, EDMONTON, AB T6E 4N7 • (780) 469-8670 • FAX (780) 465-5829
• CALGARY (403) 278-9862 • 1-800-621-8979 • www.qualimetinc.com
"Your source of Quality Materials Engineering"

CHARPY IMPACT TEST REPORT

for Procedure Qualification Record # 5B-106 AW-4

Client :	5Blue Process Equipment Inc.	**Job Number:**	1111-11006
Address:	2303-8th Street, Nisku AB, T9E 7Z1	**Date:**	March 10, 2011
Materials:	SA-516 Gr. 60/70		
Size:	0.500" thick plate	**Condition:**	As Welded
Test Specification:	**ASME Section IX**		

Specimen Type:	Charpy V-Notch
Qualification Temperature:	-60°F

Specimen Size (mm): 10

Sample Set	Sample Number	Actual Impact Energy (ft-lb)	Full Size (ft-lb)	Shear (%)	Lateral Expansion Inches
Weld	CR-1	114	114	70	0.085
	CR-2	24	24	30	0.022
	CR-3	134	134	70	0.086
	Average:	**91**	**91**	**57**	**0.064**

We certify that the statements in this record are acceptable and that the specimen(s) were prepared and tested in accordance with the requirements of the current edition of ASME Section IX and the latest addenda.

TEST RESULTS CERTIFIED BY: Qualimet

John Milner, E.I.T.

• 7817 CORONET ROAD, EDMONTON, AB T6E 4N7 • (780) 469-8870 • FAX (780) 465-6829
• CALGARY (403) 278-9862 • 1-800-621-8979 • www.qualimetinc.com
"Your source of Quality Materials Engineering"

CHARPY IMPACT TEST REPORT

for Procedure Qualification Record # 5B-106 AW-4

Client :	5Blue Process Equipment Inc.	Job Number:	1111-11006
Address:	2303-8th Street, Nisku AB, T9E 7Z1	Date:	March 10, 2011
Materials:	SA-516 Gr. 60/70		
Size:	0.500" thick plate	Condition:	As Welded
Test Specification:	ASME Section IX		

Specimen Type:	Charpy V-Notch
Qualification Temperature:	-50°F

Specimen Size (mm): 10

Sample Set	Sample Number	Actual Impact Energy (ft-lb)	Full Size (ft-lb)	Shear (%)	Lateral Expansion Inches
HAZ	CR-4	183	183	100	0.094
	CR-5	164	164	100	0.092
	CR-6	130	130	70	0.090
	Average:	**159**	**159**	**90**	**0.092**

We certify that the statements in this record are acceptable and that the specimen(s) were prepared and tested in accordance with the requirements of the current edition of ASME Section IX and the latest addenda.

TEST RESULTS CERTIFIED BY: Qualimet

John Milner, E.I.T.

QW-483 PROCEDURE QUALIFICATION RECORDS (PQR)

(See QW-200.2, Section IX, ASME Boiler and Pressure Vessel Code)

Record Actual Variables Used to Weld Test Coupon

Company Name:	5Blue Process Equipment Inc.		
Procedure Qualification Record No.:	5B-106AW-5	**Date:**	October 21, 2013
WPS No.:	5B-106AW		
Welding Process(es):	GMAW / SAW		
Types (Manual, Automatic, Semi-Automatic):	Semi-Automatic / Automatic		

Joints (QW-420)

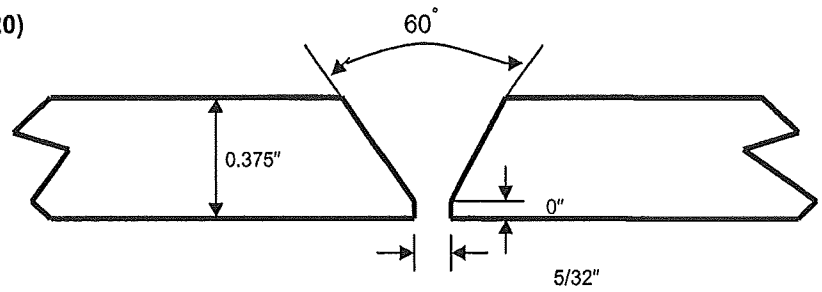

Groove Design of Test Coupon

(For combination qualifications, the deposited weld metal thickness shall be recorded for each filler metal and process used.)

BASE METALS (QW-403)							
Material Spec.:	SA-516						
Type/Grade, or UNS Number:	Grade 65/70 Dual Rated						
P-No.:	1	**Group No.:**	1	to **P-No.:**	1	**Group No.:**	2
Thickness of Test Coupon:	0.375"						
Diameter of Test Coupon:	Plate						
Maximum Pass Thickness:	0.145"						
Heat No.:	53186 021						
Other:	N/A						

FILLER METALS (QW-404)			
	1 – GMAW	3 - SAW	
SFA Specification:	5.18	5.17	
AWS Classification:	ER70S-6	EM14K	
Filler Metal F-No.:	6	6	
Weld Metal Analysis A-No.:	1	1	
Size of Filler Metal:	0.035"	3/32"	
Filler Metal Product Form:	Solid Wire	Solid Wire	
Supplemental Filler Metal:	N/A	None	
Electrode Flux Classification:	N/A	F7A8-EM14K-H8	
Flux Type:	N/A	Neutral	
Weld Metal Thickness:	0.135"	0.240"	
Other: Brand	N/A	N/A	

POSITIONS (QW-405)	
Position of Groove:	45º for GMAW, 1G for SAW
Welding Progression (Uphill, Downhill):	Downhill
Other:	N/A

PREHEAT (QW-406)	
Preheat Temperature:	50° F
Inter-pass Temperature:	550° F Maximum
Other:	N/A

POSTWELD HEAT TREATMENT (QW-407)	
Temperature:	N/A
Time:	N/A
Other:	N/A

GAS (QW-408)			
	Gas(es)	**Percent Composition (Mixture)**	**Flow Rate**
Shielding:	SFA 5.32; SG-AC-25	75% / 25%	30 scfh
Trailing:	N/A		
Backing:	N/A		
Other:	N/A		

ELECTRICAL CHARACTERISTICS (QW-409)			
Current:		Direct	
Polarity:		Reverse	
Amps:	127 to 390	**Volts:**	18.7 to 28
Tungsten Electrode Size:		N/A	
Mode of Metal Transfer for GMAW (FCAW):		Short Circuit	
Heat Input:		47,478 Joules/Inch	
Other:		N/A	

TECHNIQUE (QW-410)	
Travel Speed:	4.78 to 18.5 ipm
String or Weave Bead:	String
Oscillation:	N/A
Multi-pass or Single Pass (Per Side):	Multi-pass
Single or Multiple Electrodes:	Single
Other:	N/A

QW-483 (Back)
TENSILE TEST (QW-150)

Specimen No (In.)	Width (In.)	Thickness (In.)	Area ($In.^2$)	Ultimate Total Load (lbs.)	Ultimate Unit Stress, (psi)	Type of Failure and Location
1	0.768	0.370	0.284	23,200	81,600	Ductile Parent
2	0.749	0.367	0.275	22,600	82,200	Ductile Parent

GUIDED-BEND TESTS (QW-160)

TYPE and FIGURE NO.	RESULT
Side Bend QW – 462.2	Pass
Side Bend QW – 462.2	Pass
Side Bend QW – 462.2	Pass
Side Bend QW – 462.2	Pass

TOUGHNESS TESTS (QW-170)

Specimen No.	Notch Location	Specimen Size (mm)	Test Temperature	Impact Values			Drop Weight Break (Y/N)
				Ft-lb or J	% Shear	Mils (in.)	
1	Weld	8.48 x 10	- 50° F	14			
2	Weld	8.48 x 10	- 50° F	15			
3	Weld	8.48 x 10	- 50° F	19			
4	HAZ P1 Gr1/2	8.48 x 10	- 50° F	42			
5	HAZ P1 Gr1/2	8.48 x 10	- 50° F	38			
6	HAZ P1 Gr1/2	8.48 x 10	- 50° F	39			

Comments:

FILLET-WELD TEST (QW-180)

Result – Satisfactory: Yes N/A No N/A **Penetration into Parent Metal:** Yes N/A No N/A

Macro – Results: N/A

Other Tests

Type of Test: Hardness – Vickers 1 KG – See Attached

Deposit Analysis:

Other:

Welder's Name: Dennis Prince/Shane Sterling **Clock:** W-03934/ MW-69681 **Stamp No.:** "F" and "X"

Tests Conducted By: Alfor Metallurgical **Laboratory Test No.:** 13-550

We certify that the statements in this record, as revised, are correct and that the test welds were prepared, welded and tested in accordance with Section IX of the ASME Boiler and Pressure Vessel Code.

Manufacturer or Contractor: 5Blue Process Equipment Inc.

Date: October 21, 2013 **Certified By:** Joelle Dery-Brochu

Weld Procedure Work Sheet

PQR Data

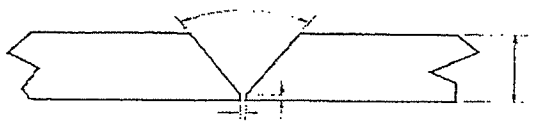

WPS#:: 5B-106
PQR#: 5B-106-5 AW

Weld Pass	Process/Consumable Size	Volts	Amps	Travel Speed (in/min)	Heat Input Joules/in	Deposted Thk.
1	GMAW 0/035" ER70S-6	18.7	127	4.78	29810	0.135"
2	SAW 3/32" LA-71/880M Flux	27	290	17.8	26393	0.240"
3	SAW 3/32" LA-71/880M Flux	27	290	18.5	25395	
4	SAW 3/32" LA-71/880M Flux	28	390	13.8	47478	
5	SAW 3/32" LA-71/880M Flux	27	290	18	26100	
6	SAW 3/32" LA-71/880M Flux	27	290	18.4	25533	
7						
8						
9						
10						
11						
12						
13						
14						
15						
16						
17						
18						
19						
20						
21						
22						

Welder Name: Dennis Prince/Shane Sterling
Welder Stamp: F/X
Welder File#: W-03934/MW-69681
Date 23-Sep-13

F7A8 EM14K
Gas at 30scfh

Material Thickness	.375"
Weld Gap	5/32"
Weld Land	0"
Bevel Angle	60°
Maximum Interpass	
Minimum Preheat	50F

ALFOR METALLURGICAL COMPANY LTD.
CONSULTING ENGINEERS

FILE #13-550

PQR #5B-106 AW5

October 18, 2013

Caliper Inspection Ltd.
406, 11979 - 40 Street S.E.
Calgary, Alberta T2Z 4M3

METAL TEST REPORT

Material Description: ASME SA-516, Grade 65/70; 0.375"-thick normalized plate; GMAW/SAW welded; as-welded condition.

Specimen Type: Reduced-section tensile, as per Figure QW-462.1(a) of the ASME Code; guided side bend, as per Figure QW-462.2 of the ASME Code.

Results:	Sample 1	Sample 2
Width:	0.768 in.	0.749 in.
Thickness:	0.370 in.	0.367 in.
Area:	0.284 sq. in.	0.275 sq. in.
Ultimate Load:	23 200 lb	22 600 lb
Ultimate Tensile Strength:	81 600 psi	82 200 psi
Fracture Character:	Ductile	Ductile
Fracture Location:	Parent	Parent

Guided side bend samples 1, 2, 3, and 4: Pass Tests.

Yours very truly,

PERMIT TO PRACTICE
ALFOR METALLURGICAL COMPANY LTD.
Signature
Date Oct 18, 2013
PERMIT NUMBER: P 2753
The Association of Professional Engineers, Geologists and Geophysicists of Alberta

ALFOR METALLURGICAL COMPANY LTD.

PROFESSIONAL ENGINEER
CHARLES E. MOZESON
18/8/13

CHARLES E. MOZESON, P. ENG

6035 - 88 STREET, EDMONTON, ALBERTA T6E 5T4 **PHONE: 780-465-0562**

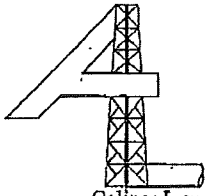

ALFOR METALLURGICAL COMPANY LTD.
CONSULTING ENGINEERS

Caliper Inspection Ltd.
406, 11979 - 40 Street S.E.
Calgary, Alberta T2Z 4M3

FILE #13-550

PQR #5B-106 AW5

October 18, 2013

CHARPY V-NOTCH IMPACT TEST RESULTS

Material Description: ASME SA-516, Grade 65/70; 0.375"-thick normalized plate; GMAW/SAW welded; as-welded condition.

Specimen Type: Charpy V-notch 0.334 inch (8.48 mm)-sized weld zone and heat-affected zone impact specimen, as per Part UG-84 of the ASME Code.

Testing Temperature: -50 F.

Results:

Weld zone: 14, 15, 19 ft-lb;

Heat-affected zone: 42, 38, 39 ft-lb.

Yours very truly,

ALFOR METALLURGICAL COMPANY LTD.

PERMIT TO PRACTICE
ALFOR METALLURGICAL COMPANY LTD.
Signature
Date Oct. 18 2013
PERMIT NUMBER: P 2758
The Association of Professional Engineers, Geologists and Geophysicists of Alberta



CHARLES E. MOZESON, P. ENG

ALFOR METALLURGICAL COMPANY LTD.
CONSULTING ENGINEERS

FILE #13-550

Caliper Inspection Ltd.
406, 11979 - 40 Street S.E.
Calgary, Alberta T2Z 4M3

PQR #5B-106 AW5

October 18, 2013

VICKERS HARDNESS TESTING OF WELDMENT

Material Description: ASME SA-516, Grade 65/70; 0.375"-thick normalized plate; GMAW/SAW welded; as-welded condition.

Vickers hardness testing at 1 kg mass (HV1) was performed on a prepared cross-section of the weldment, in accordance with NACE MR0175/ISO 15156-2 and ASTM E 92.

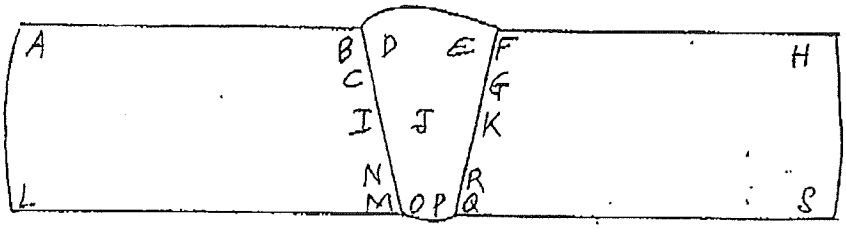

Location	HV1	Location	HV1	Location	HV1
A	166	H	168	O	175
B	205	I	187	P	169
C	185	J	200	Q	176
D	191	K	185	R	177
E	191	L	168	S	163
F	184	M	183		
G	183	N	191		

PERMIT TO PRACTICE
ALFOR METALLURGICAL COMPANY LTD.
Signature
Date OCT. 18, 2013
PERMIT NUMBER: P 8763
The Association of Professional Engineers, Geologists and Geophysicists of Alberta

Yours very truly,

ALFOR METALLURGICAL COMPANY LTD.

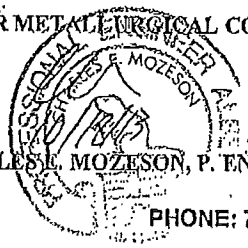

CHARLES L. MOZESON, P. ENG

6035 - 88 STREET, EDMONTON, ALBERTA T6E 5T4 **PHONE: 780-465-0562**

QW-483 PROCEDURE QUALIFICATION RECORDS (PQR)

(See QW-200.2, Section IX, ASME Boiler and Pressure Vessel Code)

Record Actual Variables Used to Weld Test Coupon

Company Name:	5Blue Process Equipment Inc.		
Procedure Qualification Record No.:	5B-103-1	**Date:**	August 17, 2010
WPS No.:	5B-106AW		
Welding Process(es):	GMAW / SMAW		
Types (Manual, Automatic, Semi-Automatic):	Semi-Automatic / Manual		

Joints (QW-420)

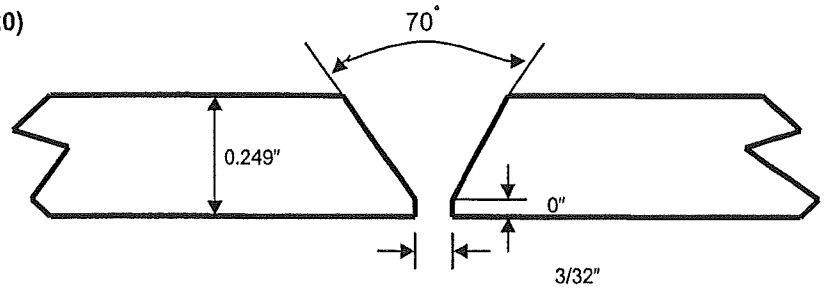

Groove Design of Test Coupon

(For combination qualifications, the deposited weld metal thickness shall be recorded for each filler metal and process used.)

BASE METALS (QW-403)

Material Spec.:	SA-516						
Type/Grade, or UNS Number:	Grade 60/70 Dual Rated						
P-No.:	1	**Group No.:**	1	to **P-No.:**	1	**Group No.:**	2
Thickness of Test Coupon:	0.249"						
Diameter of Test Coupon:	Plate						
Maximum Pass Thickness:	0.125"						
Heat No.:	49074-04703						
Other:	N/A						

FILLER METALS (QW-404)			
	1 – GMAW	3 - SMAW	
SFA Specification:	5.18	5.1	
AWS Classification:	ER70S-6	E7018-1	
Filler Metal F-No.:	6	4	
Weld Metal Analysis A-No.:	1	1	
Size of Filler Metal:	0.035"	1/8"	
Filler Metal Product Form:	Solid Wire	Covered Electrode	
Supplemental Filler Metal:	N/A	N/A	
Electrode Flux Classification:	N/A	N/A	
Flux Type:	N/A	N/A	
Weld Metal Thickness:	0.125"	0.124"	
Other: Brand	N/A	N/A	

POSITIONS (QW-405)	
Position of Groove:	3G for GMAW, 3G for SMAW
Welding Progression (Uphill, Downhill):	Downhill – GMAW, Uphill – SMAW
Other:	N/A

PREHEAT (QW-406)	
Preheat Temperature:	50° F
Inter-pass Temperature:	550° F Maximum
Other:	N/A

POSTWELD HEAT TREATMENT (QW-407)	
Temperature:	N/A
Time:	N/A
Other:	N/A

GAS (QW-408)			
	Gas(es)	**Percent Composition (Mixture)**	**Flow Rate**
Shielding:	SFA 5.32; SG-AC-25	75% / 25%	30 scfh
Trailing:	N/A		
Backing:	N/A		
Other:	N/A		

ELECTRICAL CHARACTERISTICS (QW-409)			
Current:		Direct	
Polarity:		Reverse	
Amps:	75 to 100	**Volts:**	16 to 25
Tungsten Electrode Size:		N/A	
Mode of Metal Transfer for GMAW (FCAW):		Short Circuit	
Heat Input:		59,500 Joules/Inch	
Other:		N/A	

TECHNIQUE (QW-410)	
Travel Speed:	2.1 to 6.8 ipm
String or Weave Bead:	String and Weave
Oscillation:	N/A
Multi-pass or Single Pass (Per Side):	Multi-pass
Single or Multiple Electrodes:	Single
Other:	N/A

QW-483 (Back)
TENSILE TEST (QW-150)

Specimen No (In.)	Width (In.)	Thickness (In.)	Area ($In.^2$)	Ultimate Total Load (lbs.)	Ultimate Unit Stress, (psi)	Type of Failure and Location

GUIDED-BEND TESTS (QW-160)

TYPE and FIGURE NO.	RESULT

TOUGHNESS TESTS (QW-170)

Specimen No.	Notch Location	Specimen Size (mm)	Test Temperature	Impact Values			Drop Weight Break (Y/N)
				Ft-lb or J	% Shear	Mils (in.)	
1	Weld	5.5 x 10	- 50° F	29			
2	Weld	5.5 x 10	- 50° F	31			
3	Weld	5.5 x 10	- 50° F	29			
4	HAZ P1 Gr1/2	5.5 x 10	- 50° F	18			
5	HAZ P1 Gr1/2	5.5 x 10	- 50° F	18			
6	HAZ P1 Gr1/2	5.5 x 10	- 50° F	16			

Comments:

FILLET-WELD TEST (QW-180)

Result – Satisfactory: Yes N/A No N/A **Penetration into Parent Metal:** Yes N/A No N/A

Macro – Results: N/A

Other Tests

Type of Test:

Deposit Analysis:

Other:

Welder's Name: Craig Tupper **Clock:** W-22902 **Stamp No.:** "LW"

Tests Conducted By: Qualimet **Laboratory Test No.:** 1111-10001

We re-certify that the statements in this record, as revised, are correct and that the test welds were prepared welded and tested in accordance with Section IX of the ASME Boiler and Pressure Vessel Code.

Manufacturer or Contractor: 5Blue Process Equipment Inc.

Date: October 21, 2013 **Certified By:** Joelle Dery-Brochu

[illegible] COLONEL ROAD, EDMONTON, AB T6E 2H7 • (780) 462-5870 • FAX (780) 465-5829
• CALGARY (403) 270-3950 • 1-800-621-1679 • www.qualimetinc.com

Our source of Quality Materials Engineering

CHARPY IMPACT TEST REPORT

for Procedure Qualification Record # 5B-103-1

Client :	5Blue Process Equipment Inc.	Job Number:	1111-10001
Address:	2303 - 8th Street Nisku AB T9E 7Z1	Date:	August 17, 2010
Materials:	SA-516 Gr. 60/70		
Size:	0.249" Plate (machined)	Condition:	As Welded
Test Specification:	ASME Section IX, ASME Section VIII UG-84, ASTM A-370		

Specimen Type:	Charpy V-Notch
Qualification Temperature:	-50° F

Specimen Size (mm): 5.5

Sample Set	Sample Number	Actual Impact Energy (ft-lb)	Full Size ft-lb	Shear (%)	Lateral Expansion Inches
Weld	LW-1	29	53	60	0.056
	LW-2	31	56	60	0.062
	LW-3	29	53	40	0.051
	Average:	30	54	53	0.056

We certify that the statements in this record are acceptable and that the specimen(s) were prepared and tested in accordance with the requirements of the current edition of ASME Section IX and the latest addenda.

TEST RESULTS CERTIFIED BY: Qualimet

Sean Lepine, E.I.T.

© Qualimet Inc.
Certified by Canadian Welding Bureau & Transport Canada's Authorized Welder Test Facility
ESTABLISHED 1970

9

7417 CONSHET ROAD, EDMONTON, AB T5E 4B7 • (780) 469-5870 • FAX (780) 468-8929
• CALGARY (403) 278-0362 • 1-800-621-8979 • www.qualimetinc.com
"your source of Quality Materials Engineering"

CHARPY IMPACT TEST REPORT

for Procedure Qualification Record # 5B-103-1

Client :	5Blue Process Equipment Inc.	Job Number:	1111-10001
Address:	2303 - 8th Street Nisku AB T9E 7Z1	Date:	August 17, 2010
Materials:	SA-516 Gr. 60/70		
Size:	0.249" Plate (machined)	Condition:	As Welded
Test Specification:	ASME Section IX, ASME Section VIII UG-84, ASTM A-370		

Specimen Type:	Charpy V-Notch
Qualification Temperature:	-50° F

Specimen Size (mm): 5.5

Sample Set	Sample Number	Actual Impact Energy (ft-lb)	Full Size ft-lb	Shear (%)	Lateral Expansion Inches
HAZ	LW-4	18	33	40	0.044
	LW-5	18	33	40	0.044
	LW-6	16	29	30	0.022
	Average:	17	32	37	0.037

We certify that the statements in this record are acceptable and that the specimen(s) were prepared and tested in accordance with the requirements of the current edition of ASME Section IX and the latest addenda.

TEST RESULTS CERTIFIED BY:

Sean Lepine, E.I.T.

Qualimet

Qualimet Inc.
Certified by Canadian Welding Bureau & Transport Canada & Authorized Welder Test Facility
ESTABLISHED 1978

10

Page 7

CIL # 20419-102-CS-01

LIST OF NON-ESSENTIAL VARIABLES for WPS

ASME Sec IX Code Para.	Work Order or Job #	Deviation from original WPS including the original WPS write up

TO REMAIN WITH ORGINAL WPS

B14 Certified Mill Test Reports

2303-8th Street, Nisku Alberta, T9E-7Z3 CANADA

5Blue
Process Equipment Inc.

RECEIVING INSPECTION REPORT

DATE: AUG 1 3 2013 PURCHASE ORDER# 1108-20

CUSTOMER/OWNER_____ Inlet Defluortex / Breaker / lift lugs

DESCRIPTION OF MATERIAL:	PLATE	TUBE /PIPE	BAR	FITTINGS	

		YES	NO
1	MATERIALS CORRECT TO PURCHASE ORDER:	✓	
2	MTR SUPPLIED WITH MATERIALS	✓	
3	MTR CHECKED AGAINST PACKING SLIP	✓	
4	MTR CORRECT FOR THIS MATERIAL	✓	
5	IS MATERIALS IN GOOD CONDITION (NO DAMAGE):	✓	
6	IS MATERIAL THE SAME SIZE AND SCHEDULE AS REQUIRED ON THE PURCHASE ORDER:	✓	
7	IS MATERIAL THE CORRECT GRADE AS REQUIRED ON THE PURCHASE ORDER	✓	
8	IS THE MATERIAL LEGIBLY MARKED FROM THE SUPPLIER? THIS MAY BE STAMPED or STENCILED (record Grade. Type, Heat # And any other relevant information)	✓	

5Blue Process Equipment Inc. AUG 1 3 2013 Quality Department

NOTE: If any of these inspection steps cannot be completed the inspector shall notify the QS ASAP. The QS shall make out a NCR detailing the discrepancies and the material in question shall be quarantined until a satisfactory solution to the problem can be resolved. This may include rework or sending the material back to the supplier

Inspector :_____ Signature: _____ Date AUG 1 3 2013

ROSEMARY KUNTZ
SAFETY / MTR
(780) 955-2040E:226

Packing List
54562

Ref. #109846

GT metalPRODUCTS
www.gtmetal.com

5616 - 103 STREET, EDMONTON, ALBERTA T6H 2H5
TELEPHONE 434-8721 FAX 437-5960
G.S.T. R102221025

Bill To: 5 Blue Process Equipment Inc
2803 - 8th Street
Nisku, AB T9E 7Z3

Ship To: 5 Blue Process Equipment Inc
2803 - 8th Street
Nisku, AB T9E 7Z3

Process Date: 08/09/13

Order Number: 109846
Order Date: 08/08/13

Customer Code: 5BLU-2040
Phone: 955-2040
PO Number: P7490-5B1108-20
Terms: Net 30 Days
Contact

Shipment Details: **Prepaid Shipment:** ☐ **Collect Shipment:** ☐

Total Shipment Weight: _____ **lbs.** **Material Location:** _____

Item	Quantity Ordered	Shipped	Back Ord	Canceled	Unit	Description	Job Number
1	1	1	0		LOT	5B1108-20 Inlet Def Top(2), side(2), vortex Breaker(1), Lift Lugs(2)	109846-01
2	1	1	0		EA	ENVELOPE ENCLOSED	109846-02

5 Blue Process Equipment Inc. AUG 13 2013 Quality Department

Shipper: G.T. Metal Products Ltd.
Per (Signature): _____

Carrier: _____
Per (Signature): _____
Date: Aug. 9/13

61724

ORIGINAL

MILL TEST CERTIFICATE

DONGKUK STEEL

Order No. : J116300047
PO No. : LPP201106002
Commodity : STEEL PLATE
Specification : ASTM A516-70N/ASME SA516-70N

Supplier : DONGKUK INTERNATIONAL,INC.
Customer : JNK STEEL CORP.

Certificate No. : DP3-2-110801-049-007
Date of issue : Aug. 01, 2011

Dimension Unit inch: ", mm: Space	Product No	Quantity	Weight kg	Heat No	Position	Tensile Test GL	Tensile Test YP N/mm²	Tensile Test TS N/mm²	Tensile Test EL %	Impact Test Sub	Impact Test -46 °C V Notch J	Division	C 2	Si 2	Mn 2	P 3	S 3	Cr 3	Ni 2	Cu 2	Mo 3	Nb 3	Ti 3	V 3	T.Al 3	S.Al 3	Ceq 3	Remarks
25.40*3048*6096 1"X120"X240" *Specimen No :DP04985501-a, DP04985501-c ** Normalized:910 °C.5Gmin	A159670-01.02.03.04		3,704	K1121380	T	1	342	518	29		1:219 2:199 3:188 A:202	L	16	37	145	11	2	14	1	1	1	1	3	2	40		406	22RB
	Sub Total (60)	4	14.816																									
31.75*3048*6096 1-1/4"X120"X240" *Specimen No :DP05199401-a, DP05199401-c ** Normalized:910 °C.64min	A165964-01.02		4,632	J2759296	T	1	365	542	26		1: 82 2: 74 3: 77 A: 77	L	16	37	138	11	1	10	15	19	1	30	20	4	42		416	22RB
	Sub Total (70)	2	9.264																									
31.75*3048*6096 1-1/4"X120"X240" *Specimen No :DP04993202-a, DP04993202-c ** Normalized:910 °C.64min	A159662-01		4,632	KFES829	T	1	342	522	28		1:154 2:147 3:151 A:150	L	16	37	148	16	8	20	1	1	1	1	1	2		46	413	22RB
	Sub Total (70)	1	4.632																									

* Tensile Test Direction-Transverse
* Impact Test Direction-Longitudinal
* Ceq = C+Mn/6+(Ni+Cu)/15+(Cr+Mo+V)/5
* Supply Condition - Normalized
* Chemical Composition Unit(%) : 2-x100, 3-x1000, 4-x10000

We hereby certify that the material has been made by Basic oxygen process (Fully killed steel, Fine grain practice) and satisfactorily tested in accordance with above specification requirements called for by the above order. This mill test certificate has been issued in compliance with EN 10204 3.1. All materials have been produced as PER ASME SA516 GR70N MT LTV 2007 ED 2009 ADD All materials have been produced in full compliance with ASME SECTION 2 PART A ED2007 2009 ADD

When using the ordered product for other uses, rather than the above specification use, product damage and safety accidents may be caused.

* Specimen No. : a-Tension, c-Impact
* Position : T-Top, M-Middle, B-Bottom
* Division : L-Ladle Analysis, P-Product Analysis
* Sub(Sub Size, Real Value, mm) : Blank-Full Size, 1-7.5*10, 2-5.0*10
* GL(Gauge Length, mm) : 1-200, 2-100, 3-80, 4-70, 5-50, 6-5.65√A, 7-5d, 8-4d, 9-8d
* T(S).Al : Total(Soluble) Al

Surveyor to | Surveyor to | Surveyor to | Surveyor to | Chief of Quality Control Team

Dangjin Works, 400 Hanjin-ri, Songak-myeon, Dangjin-gun, Chungcheongnam-do, 343-823, Korea

ORIGINAL

S21122DG007-1 GT METAL PRODUC - Cert#: P20831CT001.NW6240.J5695 - P.O.#: 24543

EVRAZ | EVRAZ INC. NA
Evraz Oregon Steel 14400 N. Rivergate Blvd., Portland, Oregon 97203

REPORT OF CHEMICAL/PHYSICAL TESTS

CERTIFICATE NO.	DATE	PAGE
1259607	Sep 21, 2012	2

ISO 9001 REGISTERED U.S. PLATE PRODUCER

SOLD TO

WILKINSON STEEL & METALS INC [EDMN]
ATTN: CATHY STEPANIUK
9525 60 AVE
EDMONTON, AB T6E 0C3
CANADA

WILKINSON STEEL AND METALS INC - ED
9525 60 AVE
EDMONTON, AB T6E 0C3
CANADA

MILL ORDER NO.	DATE
257670	

CUSTOMER ORDER NO.: P20831CT001E

JOB/REQ. NO.:

SHIPPING NO.	DATE
1259607	09/21/2012

CARRIER: UNION PACIFIC

CAR/TRUCK NO.: [redacted]

THIS MATERIAL HAS BEEN MANUFACTURED, TESTED AND FOUND TO MEET THE SPECIFICATIONS AND PURCHASE ORDER REQUIREMENTS
EOS CARBON PRESSURE VESSEL QUALITY ASTM A516-06 GRADE 70 ASME SA516 GRADE 70
2010/11A ADD. NORMALIZED NACE MR 0175/ISO15156-2 ANNEX A PAR. 2.1.2 COMPLIANT
NO WELD REPAIR. PRESSURE VESSEL QUALITY. KILLED FINE GRAIN (continued)

PHYSICAL PROPERTIES

ITEM NO	DESCRIPTION	HEAT NO.	SLAB	YIELD PSI X 100	TENSILE PSI X 100	% ELONG 8" 2"	% RA	HARDNESS BHN	BEND TEST	IMPACTS
	PRACTICE. LCVN 20 FT.LBF AVG @ -50 F (P) 16 FT.LBF MIN. 200 MAX BHN (P).									
2	0.3750 X 96.000ME X 480.000									
	1 PC 4901 LBS 12J5695 ^	NW6240	A30					152		
3	0.5000 X 96.000ME X 480.000									
	SCHEDULE B:7208.51.00.00									
	^	NW6237	A35	510	740	30				
					LCVN @ -50 DEG F 10.0mm 130 180 175 / 161.7 ft.lbf					
	THE FOLLOWING PLATES WERE NORMALIZED AT 1660 DEGS F FOR 20 MINUTES AND AIR COOLED									
	1 PC 6534 LBS 12J5707 ^	NW6237	A35					152		
	THE FOLLOWING PLATES WERE NORMALIZED AT 1660 DEGS F FOR 20 MINUTES AND AIR COOLED									
	1 PC 6534 LBS 12J5708 ^	NW6237	A35					154		
	5 PCS 27771 LBS TOTALS									

CHEMICAL ANALYSIS

HEAT NO.	C	Mn	P	S	Si	Cu	Ni	V	Cb	Al	Cr	Mo	Ti	B	N	Ca			CE	Ladle Check Grain Size
NW6240	.21	1.37	.013	.004	.32	.01	.05	.024	.005	.039	.02	.00	.003	.0000						
NW6237	.18	1.33	.012	.004	.32	.01	.06	.026	.005	.036	.02	.00	.002	.0000						

HEATS INDICATED WITH (+) WERE MELTED & MANUFACTURED IN THE USA. HEATS INDICATED WITH (^) WERE ROLLED IN THE USA.

..... END OF REPORT .....

I certify the above to be correct as contained in the records of EVRAZ INC. NA By _____ QUALITY COORDINATOR

5Blue
Process Equipment Inc.

RECEIVING INSPECTION REPORT

DATE: JUN 2 0 2013 PURCHASE ORDER# 1108-20

CUSTOMER/OWNER Petromesh Vane Pack.

DESCRIPTION OF MATERIAL:	PLATE	TUBE /PIPE	BAR	FITTINGS	

		YES	NO
1	MATERIALS CORRECT TO PURCHASE ORDER:	✓	
2	MTR SUPPLIED WITH MATERIALS	✓	
3	MTR CHECKED AGAINST PACKING SLIP	✓	
4	MTR CORRECT FOR THIS MATERIAL	✓	
5	IS MATERIALS IN GOOD CONDITION (NO DAMAGE):	✓	
6	IS MATERIAL THE SAME SIZE AND SCHEDULE AS REQUIRED ON THE PURCHASE ORDER:	✓	
7	IS MATERIAL THE CORRECT GRADE AS REQUIRED ON THE PURCHASE ORDER	✓	
8	IS THE MATERIAL LEGIBLY MARKED FROM THE SUPPLIER? THIS MAY BE STAMPED or STENCILED (record Grade. Type, Heat # And any other relevant information)	✓	

5 Blue Process Equipment Inc. JUN 2 0 2013 Quality Department

NOTE: If any of these inspection steps cannot be completed the inspector shall notify the QS ASAP. The QS shall make out a NCR detailing the discrepancies and the material in question shall be quarantined until a satisfactory solution to the problem can be resolved. This may include rework or sending the material back to the supplier

JUN 2 0 2013

Inspector :_____ Signature: _____ Date _____

ROSEMARY KUNTZ
SAFETY / MTR
(780) 955-2040E:226

Industrial Process Products Ltd.

10580 - 48 Street SE
Calgary, Alberta T2C 2B8

Phone # (403) 301-0111 Fax # (403) 301-0112
E-mail ippsales@telusplanet.net

Packing Slip

Date M/D/Y	Invoice #
18/06/2013	18399

Invoice To
5Blue Process Equipment Inc. 2303 - 8th Street Nisku, AB T9E 8R8

Ship To	
5Blue Process Equipment Inc. 2303 - 8th Street Nisku, AB T9E 8R8	
Customer Phone	780-955-2040

P.O. No.	Ship Via	Ship Acct #	Rep	IPP Job#
P6862-5B1108-20	Canadian Freigh	120-1019911	GS	130523VP

Qty	Description
1	PETROMESH Vane Pack 5V-72-24-66ID-0.375-CS 316L SS Vanes with 3/8" TH SA516-70N boxing for 66"ID Vessel - Removable Vanes - Top Outlet -Per IPP Ref: VP-2013-05-16-5B GST On Sales

5 Blue Process Equipment Inc. JUN 20 2013 Quality Department

RECEIVED JUN 19 2013

We appreciate your business.

GST/HST No. 138320007

METALLURGICAL TEST REPORT

NORTH AMERICAN STAINLESS
6870 HIGHWAY 42 EAST
GHENT, KY 41045

151663

6870 HIGHWAY 42 EAST

Certificate: 796425 1
Customer: 007060 101

Mail To:
C.F.F. STAINLESS STEEL, INC.
C.F.F. STAINLESS - TOLLING
C/O NAS CANADA, INC.
740 IMPERIAL ROAD NORTH
GUELPH, ON N1K1Z3

Ship To:
C.F.F. STAINLESS STEEL, INC.
C.F.F. STAINLESS - TOLLING
C/O NAS CANADA, INC.
740 IMPERIAL ROAD NORTH
GUELPH, ON N1K1Z3

Date: 12/20/2012 Page: 1
Steel: 316/316L
Finish: 2B
Corrosion: ASTM A262/02aE;180Bend-OK

Your Order: C86234
NAS Order: PN 0023780 08

PRODUCT DESCRIPTION:

STNLS STL COIL, C.R. ANNEALED & PICKLED; UNS 31600/31603
~~ASTM A240/11b,A480/11b,A666/10;ASME SA240/11a,SA480/11a,SA666/11a~~
CHEM ONLY ON FOLLOWING ASTM: A276/10,A479/11,A484/11,A312/11
CHEM ONLY ON FOLLOWING ASME: SA312/11,SA479/11
AMS 5507F/5524L X MRK;
NACE MR0175/ISO 15156-3:2003 A, MR0103/07; QQS763D-A X MAG PERM
MIN. SOLUTION ANNEAL TEMP 1900F, WATER QUENCHED

REMARKS:

Mat'l is Free of Mercury Contamination. No weld repairs.
EN 10204:2004 3.1; RoHS Compliant
Material is Free of Radioactive Contamination
NAS Steel Making Process: EAF, AOD, & Cont. Casting
Product Mfg.by a Quality Mgt.Sys. in Conf. w/ISO 9001
*Melted & Manufactured in the USA; Mat'l is DFARs Compliant

Product Id	Coil #	Skid #	Thickness	Width	Weight	-------Length------	Mark	Pieces	Commodity Code
01E8A9 C	01E8A9 C		.0725	60.0000	10,500	COIL	5	1	

CHEMICAL ANALYSIS

CM(Country of Melt) ES(Spain) US(United States) ZA(South Africa) JP(Japan)

Chemical Analysis per ASTM A751/08

HEAT	CM	C %	CR %	CU %	MN %	MO %	N %	NI %	P %	S %
E8A9	US	.0187	16.7165	.4675	1.5310	2.0370	.0434	10.0300	.0335	.0010
		SI %								
		.3150								

MECHANICAL PROPERTIES

Product Id#	Coil #	loc	dir	UTS KSI	.2% YS KSI	ELONG %-2"	Hard RB	Tail Hard
01E8A9 C	01E8A9 C	F	T	93.49	47.71	49.30	83.00	81.00

Blue Process Equipment LLC
JUN 20 2013
Quality Department

NAS hereby certifies that the analysis on this certification is correct. Based upon the results and the accuracy of the test methods used, the material meets the specifications stated. These results relate only to the items tested and this report cannot be reproduced, except in its entirety, without the written approval of NAS.

Technical Dept. Mgr. ERIC HESS 1/14/2013

Remarks: Space 3
316LSS for CFF PO 6429
14GA

NOTICE OF SHIPMENT/
PACKING LIST

ATI Allegheny Ludlum
Allegheny Technologies

CERTIFICATE OF TEST

AL 0705-4 (2)

CUST ORDER NO. & DATE		CUST CODE	ACCEPTING MILL	SHIPPER NO.	PRODUCT CODE	MILL ORDER NUMBER	DATE SHIPPED
6481	04/02/12	844546	LOUISVILLE, OH	542387	13020102120000	30-042-025	06/12/12

FORMS DISTRIBUTION: 3 | SHIP TO | SPEC 1 | SOLD TO

REPEAT ORDER: 96870-0 | DO RATE: 28 | PRIORITY: | GOV'T. CONTRACT

PRIME DSO 521 | SEC. DSO

MAT'L: 1237 | SHIPPING LOCATION: LOUISVILLE | OH | INVOICE: 241625

SHIP TO

GRADE AND SPECIFICATIONS
.TI 316L" STAINLESS STEEL SHEET C R COILS ANNEALED 2B FIN MILL EDGE (316/316L) (ASTM-A-240-11B)

CARRIER - TOTAL PACKAGE EXPRESS

IS DIN EN 10204:2005 - 3.1 CERTIFICATE OF TEST SHALL NOT BE REPRODUCED EXCEPT IN FULL. FEDERAL LAW
OHIBITS THE RECORDING OF FALSE, FICTITIOUS, OR FRAUDULENT STATEMENTS OR ENTRIES ON THE CERTIFICATE
D MAY BE PUNISHABLE AS A FELONY UNDER FEDERAL LAW. ATI AL HOLDS SEVERAL QUALITY CERTIFICATIONS THAT
CLUDE ISO-9001, AS9100, NADCAP, AND ISO/IEC 17025. MATERIAL WAS MANUFACTURED IN ACCORDANCE WITH THE
I AL QUALITY MANUAL REVISION 20 DATED 02/24/2012.

I ALLEGHENY LUDLUM PERFORMS CHEMICAL ANALYSIS BY THE FOLLOWING TECHNIQUES:
S BY COMBUSTION/INFRARED
O, H BY INERT FUSION/THERMAL CONDUCTIVITY
, P, SI, CR, NI, MO, CU, CB, CO, V BY WDXRF
BY OES
AND TI (>=0.10%) BY WDXRF, OTHERWISE BY OES
, BI, AG BY GFAA

STING WAS PERFORMED AT THE FOLLOWING LOCATIONS:
= ATI-ALLEGHENY LUDLUM; 950 TENTH STREET; MIDLAND, PA 15059
= ATI-ALLEGHENY LUDLUM; 1300 PACIFIC AVENUE; NATRONA HEIGHTS, PA 15065

<<<<<<<< FOR ACCESS TO ONLINE CERTIFICATES OF TEST >>>>>>>>
<<<<<<<< REGISTER AT WWW.ALCEXTRA.COM >>>>>>>>

5 Blue Process Equipment Inc.
JUN 20 2013
Quality Department

GE 02 - FINAL PAGE.

06/12/12 09:30:47

--Please Note--This consignment was turned over to
t class condition, being correctly loaded, at which time
ility for loss or damage in shipment ceased. For your
ease examine shipment as it arrives. If any shortage or
covered, have a full description made by transportation
bill before signing.

WARNING
Material Safety Data Sheets for this product have been supplied to your Purchasing Department. For an additional copy phone 724-226-5980. CAUTION: Processing that makes fumes, dust, or solutions may cause lung disease. See Material Safety Data Sheets for further information.

Les fiches d'information—sécurité de ce produit ont été fournies à votre département chargé des achats. Pour obtenir des exemplaires supplémentaires veuillez téléphoner au numéro suivant 724-226-5980. Attention: les traitements entraînant la production de vapeurs, poussières, ou solutions peuvent, être cause de maladies pulmonaires. Pour plus de renseignements se référer aux fiches d'information-sécurité.

The above is a true copy of data on file. The material and test results conform to the sales contract and specification(s) as set forth in Allegheny Ludlum's Order Acknowledgement.

Stephen Wolff

1

NOTICE OF SHIPMENT/
PACKING LIST
979621

ATI Allegheny Ludlum
Allegheny Technologies

4402700 PO 4118

AL 6168-4 121

CERTIFICATE OF TEST

MILL ORDER NO. & DATE		CUST. CODE	ACCEPTING MILL	SHIPPER NO.	PRODUCT CODE	MILL ORDER NUMBER	DATE SHIPPED
3481	04/02/12	844546	LOUISVILLE, OH	542387	13020102120000	30-042-025	06/12/12

FORMS DISTRIBUTION: 3 | SHIP TO → | SPEC → 1 | SOLD TO

REPEAT ORDER	DC RATE	PRIORITY	GOVT CONTRACT	MATL	SHIPPING LOCATION		INVOICE
96870-0	28			1237	LOUISVILLE	OH	241625

PRIME DSO 521 SEC. DSO

SHIP TO

GRADE AND SPECIFICATIONS

CARRIER - TOTAL PACKAGE EXPRESS

FI 316L" STAINLESS STEEL SHEET C R COILS ANNEALED 2B FIN MILL EDGE (316/316L) (ASTM-A-240-11B)

EM	PCS	DIMENSIONS W/G/L	HEAT #	LIFT #	TEST #	GROSS	TARE	NET	THEO	TAG #/ CD	SKID
IA	1	48./.0351/3010.	979621	05162N879	L255028	17430		17430		867892	
P		CUST IDENTITY 316LB0351X48MWRG									
	1	COIL				17430		17430			

DIST: FAX COPIES OF INVOICES TO ATTENTION OF NICOLE @773-247-9027

PE HEAT/TEST	--C---	--MN--	--P----	--S---	--SI--	--CR--	--NI--	--MO--	--N---
T 979621	.024	1.81	.035	.0004	.37	16.57	10.08	2.06	.04
T LOCATION	MI	MI	MI	MI	MI	MI	MI	MI	MI

M TEST NO	YIELD PSI *	TENSILE PSI	% ELONG IN 2"	% R/A	HARDNESS	BEND		GRAIN SIZE	HARDENABILITY
A L255028				NR	70.HR30TW	NR	NR	NR	NR
T LOCATION	T 55500. TC	99500. TC	48. TC		70.HR30TW TC				

* Y.S. BY 0.2% OFFSET METHOD

NR = DATA NOT REQUIRED
DE VERIFICATION WAS CARRIED OUT SPECTROSCOPICALLY

EN 10204:2005 - 3.1 CERTIFICATE DOES NOT INDICATE PED APPROVAL FOR THIS MATERIAL.

ERIAL MELTED AND ROLLED IN THE UNITED STATES AND COMPLIES WITH DFARS JANUARY 2010 EDITION, TION 252.225-7008.

E 01 - CONTINUED ON PAGE 02

06/12/12 09:30:47

Quality Process Equipment Inc JUN 20 2013 Quality Department

RECEIVED JUN 14 2012 STAINLESS SALES CORP.

Please Note—This consignment was turned over to [illegible] class condition, being correctly loaded, at which time [illegible]bility for loss or damage in shipment ceased. For your [illegible]ease examine shipment as it arrives. If any shortage or [illegible]covered, have a full description made by transportation [illegible]bill before signing.

WARNING
Material Safety Data Sheets for this product have been supplied to your Purchasing Department. For an additional copy phone 724-226-5980. CAUTION: Processing that makes fumes, dust, or solutions may cause lung disease. See Material Safety Data Sheets for further information.

Les fiches d'information—sécurité de ce produit ont été fournies à votre département chargé des achats. Pour obtenir des exemplaires supplémentaires veuillez téléphoner au numéro suivant 724-226-5980. Attention: les traitements entrainant la production de vapeurs, poussieres, ou solutions peuvent, être cause de maladies pulmonaires. Pour plus de renseignements se référer aux

The above is a true copy of data on file. The material and test results conform to the sales contract and specification(s) as set forth in Allegheny Ludlum's Order Acknowledgement.

Stephen West

1

NAS NAST D3D1.PDF D3D1

METALLURGICAL TEST REPORT

NORTH AMERICAN STAINLESS
6870 HIGHWAY 42 EAST
GHENT, KY 41045

6870 HIGHWAY 42 EAST

Certificate: 763028 1

Customer: 007040 101

Mail To:
ULBRICH OF CANADA
ULBRICH - TOLLING
C/O NAS CANADA, INC.
740 IMPERIAL ROAD NORTH
GUELPH, ON N1K1Z3

Ship To:
ULBRICH OF CANADA
ULBRICH - TOLLING
C/O NAS CANADA, INC.
740 IMPERIAL ROAD NORTH
GUELPH, ON N1K1Z3

Date: 8/20/2012 Page: 1

Steel: 316/316L

Finish: 2B

Your Order: P002343

NAS Order: PN 0021220 01

Corrosion: ASTM A262/02aE;180Bend-OK

PRODUCT DESCRIPTION:

STNLS STL COIL, C.R. ANNEALED & PICKLED; UNS 31600/31603
ASTM A240/11b,A480/11b,A666/10;ASME SA240/11a,SA480/11a,SA666/11a
CHEM ONLY ON FOLLOWING ASTM: A276/10,A479/11,A484/11,A312/11
CHEM ONLY ON FOLLOWING ASME: SA312/11,SA479/11
AMS 5507F/5524L X MRK;
NACE MR0175/ISO 15156-3:2003 A, MR0103/07; QQS766D-A X MAG PERM
MIN. SOLUTION ANNEAL TEMP 1900F, WATER QUENCHED

REMARKS:

Mat'l is Free of Mercury Contamination. No weld repairs.
EN 10204:2004 3.1; RoHS Compliant
Material is Free of Radioactive Contamination
NAS Steel Making Process: EAF, AOD, & Cont. Casting
Product Mfg.by a Quality Mgt.Sys. in Conf. w/ISO 9001
*Melted & Manufactured in the USA; Mat'l is DFARs Compliant

Product Id	Coil #	Skid #	Thickness	Width	Weight	-------Length------	Mark	Pieces	Commodity Code
IA1350 A	02D3D1 A		.0345	48.0000	18,790	COIL	2	1	

CHEMICAL ANALYSIS

CM(Country of Melt) ES(Spain) US(United States) ZA(South Africa) JP(Japan)

Chemical Analysis per ASTM A751/08

HEAT	CM	C %	CR %	CU %	MN %	MO %	N %	NI %	P %	S %
D3D1	US	.0140	16.7385	.5025	1.4935	2.1590	.0548	10.0550	.0370	.0010

SI %
.3645

MECHANICAL PROPERTIES

Product Id#	Coil #	loc	dir	UTS KSI	.2% YS KSI	ELONG %-2"	Hard RB	Tail Hard
IA1350 A	02D3D1 A	F	T	99.15	63.21	45.43	90.00	85.00

Blue Process Equipment Inc. JUN 20 2012 Quality Department

NAS hereby certifies that the analysis on this certification is correct. Based upon the results and the accuracy of the test methods used, the material meets the specifications stated. These results relate only to the items tested and this report cannot be reproduced, except in its entirety, without the written approval of NAS.

Technical Dept. Mgr. ERIC HESS 8/21/2012

ESSAR STEEL

ESSAR STEEL ALGOMA INC.,105 West Street, Sault Ste. Marie,Ontario, Canada P6A 7B4

SO No.,Item & Date.: 8007384 000020 2013/04/03	Shipment No.& Date.: 1200000523 2013/04/10	TC No., Date & Time : ESA-66050 2013/04/19 - 12:56:58
Sold to Customer Name and Address : WILKINSON STEEL AND METALS INC 60TH AVENUE 9525 EDMONTON,Alberta,Canada T6E 0C3	Ship to Customer Name and Address: WILKINSON STEEL AND METALS INC 60TH AVENUE 9525 EDMONTON,Alberta,Canada T6E 0C3	Customer PO NO./Item: P21228CT002E / 2 BOL NO.: 1200000523 Cust.Part No.: Carrier : CN (CAD FUNDS) - CN 622528-REV

Customer Specification : HR STEEL PLATE Carbon Multi Cert ASTM A516 GR 70 (10) / ASME SA516 GR 70 (11A) NACE MR 0175 - Annex A Par.2.1.2 Compliant, NACE MR 0103-2007, BHN 200 max Normalized Normalize Temp 1670 °F 12 min CVNL Req. 20 / 16 FT-LBF at -50.0 F Std Thickness Tol PVQ Top and Bottom Standard Surface Flatness 1/2 A20 Fine Grain Fully Killed

Supplementary Instructions : Test Cert 1:780-435-8134 Test Cert 2: 604-301-3244

Insp T/R : Test Report As Per Spec — Cust Use : PVQ

ESSAR STEEL ALGOMA INC HEREBY CERTIFIES THAT THE MATERIAL HEREIN DESCRIBED WAS MADE AND TESTED IN ACCORDANCE WITH THE RULES OF THE SPECIFICATION SHOWN ALL RESULTS ARE RETAINED IN ACCORDANCE WITH THE COMPANY'S STANDARD RECORD KEEPING PRACTICES.
THIS MILL TEST REPORT MAY NOT BE REPRODUCED EXCEPT IN FULL WITHOUT WRITTEN APPROVAL OF ESSAR STEEL ALGOMA INC IF YOU RECEIVE THIS DOCUMENT AND ARE NOT THE INTENDED RECEIVER, PLEASE CALL (705)945-4096 FOR INSTRUCTIONS ON METHOD OF DISPOSAL OF DOCUMENT.

MEETS EN 10204:2004 TYPE 3.1
ISO QUALITY AND ENVIRONMENTAL CERTIFICATES AVAILABLE AT WWW.ESSARSTEEL.ALGOMA.COM

ALL HEATS FULLY KILLED
HEATS INDICATED WITH (') FINE GRAINED
HEATS INDICATED WITH (+) MADE IN CANADA WITH DOMESTIC AND NORTH AMERICAN MATERIALS.

Dimensions (T x W x L)	Batch No.	Heat No-MS	Quantity	Pcs
0.3750 " x 120.000 " x 480.00 "	AD0818	5232P3-S3	6,126 LB	1

CHEMICAL PROPERTIES

Heat No. (wt%)	C	Mn	P	S	Si	Cr	Ni	Cu	Mo	Al	Nb	V	B	Ti	DO
5232P3+'	0.19	1.07	0.009	0.004	0.310	0.02	0.01	0.01	0.00	0.027	0.000	0.001	0.0002	0.002	0.37

MECHANICAL PROPERTIES

Hardness Tests

Heat No.	Batch No.	SRCE	LAB	GAUGE	COND	LOC	MTHD	HARDNESS
5232P3	AD0818	166"	ALG	0.3750	N	B	HBW	153

Impact Tests

Heat No.	Batch No.	SRCE	LAB	GAUGE	COND	METH	DIR	LOC	SIZE	TEMP(°F)	FULLENERGY(ft-lbf)	FULL AVG(ft-lbf)
5232P3	AD0818	166"	ALG	0.3750	AR	CVN	L	B	3/4	-50	75 108 110	97

Process Equipment Inc. JUN 20 2013 Quality Department

K. UGHADPAGA
MANAGER METALLURGICAL SERVICES

"WARNING" THE TEST RESULTS AND VALUES REPORTED HEREIN INDICATE ONLY THAT (1) THE PARTICULAR STEEL FOR WHICH THIS CERTIFICATE IS ISSUED MEETS THE MINIMUM SPECIFIED YIELD STRENGTH AND (2) THE ANALYSIS AND PHYSICAL PROPERTIES OF SUCH STEEL ARE IN CONFORMANCE WITH THE REQUIREMENTS OF THE SPECIFICATION INDICATED. THE RESULTS OR VALUES REPORTED HEREIN CAN NOT BE USED TO QUALIFY THE STEEL FOR ANY SPECIFICATION OTHER THAN THE ONE INDICATED AND CAN NOT BE RELIED UPON FOR ANY PURPOSE (INCLUDING DESIGN OR CALCULATIONS) AS REPRESENTING THE ACTUAL STRENGTH OF SUCH STEEL.

ESSAR Steel Algoma 4/19/2013 1:34:18 PM PAGE 1/002 Fax Server

ESSAR STEEL

ESSAR STEEL ALGOMA INC.,105 West Street, Sault Ste. Marie,Ontario, Canada P6A 7B4

SO No_Item & Date.: 6007384 000020 2013/04/03	Shipment No.& Date.: 1200000523 2013/04/10	TC No_ Date & Time : ESA-66050 2013/04/19 - 12:56:58
Sold to Customer Name and Address :	Ship to Customer Name and Address:	Customer PO NO./Item: P21228CT002E / 2
WILKINSON STEEL AND METALS INC	WILKINSON STEEL AND METALS INC	BOL NO.: 1200000523
50TH AVENUE 9525	60TH AVENUE 9525	Cust.Part No.:
EDMONTON,Alberta,Canada	EDMONTON,Alberta,Canada	Carrier : CN (CAD FUNDS) - CN 522528-REV
T6E 0C3	T6E 0C3	

Customer Specification : HR STEEL PLATE Carbon Multi Cert ASTM A515 GR 70 (10) / ASME SA516 GR 70 (11A) NACE MR 0175 - Annex A Par.2.1.2 Compliant, NACE MR 0103-2007, BHN 200 max Normalized Normalize Temp 1670 °F 12 min CVNL Req. 20 / 16 FT-LBF at -50.0 F Std Thickness Tol PVQ Top and Bottom Standard Surface Flatness 1/2 A20 Fine Grain Fully Killed

Supplementary Instructions : Test Cert 1:780-435-8134 Test Cert 2: 604-301-3244

Insp T/R : Test Report As Per Spec — Cust Use : PVQ

ESSAR STEEL ALGOMA INC. HEREBY CERTIFIES THAT THE MATERIAL HEREIN DESCRIBED WAS MADE AND TESTED IN ACCORDANCE WITH THE RULES OF THE SPECIFICATION SHOWN. ALL RESULTS ARE RETAINED IN ACCORDANCE WITH THE COMPANY'S STANDARD RECORD KEEPING PRACTICES.
THIS MILL TEST REPORT MAY NOT BE REPRODUCED EXCEPT IN FULL WITHOUT WRITTEN APPROVAL OF ESSAR STEEL ALGOMA INC. IF YOU RECEIVE THIS DOCUMENT AND ARE NOT THE INTENDED RECEIVER, PLEASE CALL (705)945-4005 FOR INSTRUCTIONS ON METHOD OF DISPOSAL OF DOCUMENT.

MEETS EN 10204:2004 TYPE 3.1
ISO QUALITY AND ENVIRONMENTAL CERTIFICATES AVAILABLE AT WWW.ESSARSTEELALGOMA.COM

MECHANICAL PROPERTIES

Tensile Tests:

Heat No.	Batch No.	SRCE	LAB	GAUGE	COND	METH	DIR	LOC	YIELD(KSI)	TENSILE(KSI)	EL SCALE	ELONG(%)
5232P3	AD0818	165"	ALG	0.3750	AR	.2	T	B	52.0	74.0	8"	28

5 Blue Process Equipment Inc. JUN 20 2013 Quality Department

K. UGHADPAGA

MANAGER METALLURGICAL SERVICES

"WARNING" THE TEST RESULTS AND VALUES REPORTED HEREIN INDICATE ONLY THAT (1) THE PARTICULAR STEEL FOR WHICH THIS CERTIFICATE IS ISSUED MEETS THE MINIMUM SPECIFIED YIELD STRENGTH AND (2) THE ANALYSIS AND PHYSICAL PROPERTIES OF SUCH STEEL ARE IN CONFORMANCE WITH THE REQUIREMENTS OF THE SPECIFICATION INDICATED. THE RESULTS OR VALUES REPORTED HEREIN CAN NOT BE USED TO QUALIFY THE STEEL FOR ANY SPECIFICATION OTHER THAN THE ONE INDICATED AND CAN NOT BE RELIED UPON FOR ANY PURPOSE (INCLUDING DESIGN OR CALCULATIONS) AS REPRESENTING THE ACTUAL STRENGTH OF SUCH STEEL.

ESSAR Steel Algoma 4/19/2013 1:34:18 PM PAGE 2/002 Fax Server

5Blue
Process Equipment Inc.

RECEIVING INSPECTION REPORT

DATE: JUN 1 8 2013 PURCHASE ORDER# 1108-20

CUSTOMER/OWNER_____

DESCRIPTION OF MATERIAL:	PLATE	TUBE /PIPE	BAR	FITTINGS	

		YES	NO
1	MATERIALS CORRECT TO PURCHASE ORDER:	✓	
2	MTR SUPPLIED WITH MATERIALS	✓	
3	MTR CHECKED AGAINST PACKING SLIP	✓	
4	MTR CORRECT FOR THIS MATERIAL	✓	
5	IS MATERIALS IN GOOD CONDITION (NO DAMAGE):	✓	
6	IS MATERIAL THE SAME SIZE AND SCHEDULE AS REQUIRED ON THE PURCHASE ORDER:	✓	
7	IS MATERIAL THE CORRECT GRADE AS REQUIRED ON THE PURCHASE ORDER	✓	
8	IS THE MATERIAL LEGIBLY MARKED FROM THE SUPPLIER? THIS MAY BE STAMPED or STENCILED (record Grade. Type, Heat # And any other relevant information)	✓	

5 Blue Process Equipment Inc. JUN 1 8 2013 Quality Department

NOTE: If any of these inspection steps cannot be completed the inspector shall notify the QS ASAP. The QS shall make out a NCR detailing the discrepancies and the material in question shall be quarantined until a satisfactory solution to the problem can be resolved. This may include rework or sending the material back to the supplier

Inspector :_____ Signature: _____ Date JUN 1 8 2013

ROSEMARY KUNTZ
SAFETY / MTR
(780) 955-2040E:226

Forged Vessel Connections, Canada Limited
(a subsidiary of AmeriForge Group Inc.)
7410A-5 Street S.E., Calgary, Alberta T2H-2L9
Phone (403) 255-9011 or toll free (800) 382-3490
Fax 403-255-7239
www.ameriforgegroup.com/fvc/

Packing List

Shipper ID: SHPR13807
Ship Date: 06/14/13
Print Date: 06/17/13

SOLD TO: 00011689
5BLUE PROCESS EQUIPMENT
2303 - 8th STREET
NISKU, AB T9E 7Z3
Canada

SHIP TO: 00011689
5BLUE PROCESS EQUIPMENT
2303 - 8th STREET
NISKU, AB T9E 7Z3
Canada

Ship Via: PAYNE DIRECT PPD FOB Point: Ex Works	Mode of Transportation: Carrier Shipment Refer: SHPR13807	Customer Contact: Phone:
Bill of Lading #:	Remarks:	Salesman:

Line #	Item# Description	Cust. PO# SO#-Ln #	Heat Code	UM	HC Qty Shipped	Qty. Ordered	Qty. BO	Qty. Shipped Cum. Shipped
	***							
	THANK YOU FOR YOUR ORDER - PLEASE REVIEW AND ADVISE OF ANY DISCREPANCIES.							
	***							
	REF: JOB #5B1108-20							
	***							
1	HBN160150121A004A1	P6903-5B1108-20		EA				1.00 1.00
	16-150-12.125-2-1-4	C12826-1				1.0	0	
			D598BN		1.0			
2	HBN160150247A004A1	P6903-5B1108-20		EA				1.00 1.00
	16-150-24.875-2-1-4	C12826-2				1.0	0	
			C965BN		1.0			
3	HBN200150251A004A1	P6903-5B1108-20		EA				1.00 1.00
	20-150-25.125-2-1-4	C12826-5				1.0	0	
			D603BN		1.0			

Shipment Weight Summary

Description	Quantity	Net Weight	Tare Weight	Gross Weight	Weight UM
16-150-12.125-2-1-4	1.0	395.0	0.0	395.0	LB
16-150-24.875-2-1-4	1.0	761.0	0.0	761.0	LB
20-150-25.125-2-1-4	1.0	840.0	0.0	840.0	LB
		1996.0	0.0	1996.0	

5 Blue Process Equipment Inc. JUN 10 2013 Quality Department

Packed By: _____ **Loaded By:** _____ **Verified By:** _____

MTR

Material Test Report

FVC Heat Nbr: D598BN

FVC Canada Ltd.
An Ameriforge Group Company
7410A-5 Street S.E. Calgary, Alberta T2H-2L9
ISO 9001:2008 Certified
Sales: (403) 255-9011 Fax: (403) 255-7239

5BLUE PROCESS EQUI 00011689	PO: P6903-5B1108-20	Sales Order: C12826	Line: 1
2303 - 8th STREET	Item Code: HBN160150121A004A1	Qty: 1	
T9E 7Z3 NISKU, AB	Item Desc: 16-150-12.125-2-1-4 HBN,SA350LF2,150#,16"x12		
CA	Mill Heat: 4507745		
Spec: ASME SA350-LF2-CL1: 2010 Edition; 2011 Addenda			

Element	(%wt)	Ladle	Product	EPCRA	CAS#	Element	(%wt)	Ladle	Product	EPCRA	CAS#
C	Carbon	0.19				Sn	Tin	0.001			
Mn	Manganese	1.29		✓	7439-96-5	B	Boron	0.0001			
P	Phosphorous	0.016				Ti	Titanium	0.002		✓	7440-02-0
S	Sulphur	0.004				Al	Aluminum	0.033			
Si	Silicon	0.23				Ca	Calcium	0.0029			
Cu	Copper	0.00		✓	7440-50-8	As	Arsenic	0.00		✓	7440-38-2
Ni	Nickel	0.01		✓	7440-02-0	Sb	Antimony	0.002		✓	7440-36-0
Cr	Chromium	0.02		✓	7440-47-3	CE	C+Mn/6+(Cr+M	0.41			
Mo	Molybdenum	0.00				Cu+Ni+Cr+Mo+V		0.04			
V	Vanadium	0.005				Cr+Mo		0.02			
Cb	Columbium (N	0.001				Cb+V		0.006			

Mechanical Testing	
Test Lab	AMF 52346
BHN	143 - 143
Elg (%)	34.0
RA (%)	64.0
Tensile (ksi)	72.434
Yield (ksi)	48.657
Charpy (ft-lbs)	62 - 59 - 79
Charpy Temp (F)	-50
Avg Energy 3 Specimens (ft-lbs)	67
Min Energy 1 Specimens (ft-lbs)	59
Shear (%)	40-40-50
LatExp(Mils)	57-51-62

Heat Treat	
Heat Treatment	Normalized

Other	
Country of Origin	Brazil
Manufactured In	USA
Production Method	BOF
Fully Killed	YES
Reduction Ratio (Mill) x:1	2:1
Gr.Sz.	6
Made to Fine Grain Practice	YES

MATERIAL MEETS NACE MR0175 & MR0103 LATEST EDITIONS. CE=C+(Mn/6)+({Cr+Mo+V}/5)+({Ni+Cu}/15),
Elongation in 2" round specimen. YIELD STRENGTH MEASURED AT 0.2% OFFSET.
FVC STANDARD MANUFACTURING PRACTICES:
1) FLANGE DIMENSIONS & BOLTING COMPLY - ASME B16.5.
2) SELF-REINFORCING NOZZLES COMPLY WITH SPECIFICATION OF SECTION VIII DIV. 1 OR DIV. 2 PER CUSTOMER DESIGN/FVC DESIGN.
3) MATERIAL SPECIFICATION COMPLIES WITH ASME SECT. II PART A.
4) ALL FVC MATERIAL MANUFACTURED PER FINE GRAIN PRACTICE.
5) ALL FVC MATERIAL CERTIFIED PER EN 10204 Type 3.1 UNLESS OTHERWISE SPECIFIED.
6) CERTIFICATE OF INSURANCE AVAILABLE UPON REQUEST.
7) PRODUCT FREE OF MERCURY CONTAMINATION.

5 Blue Process Equipment Inc. JUN 18 2013 Quality Department

EPCRA Supplier Notification: This product may contain one or more toxic chemicals subject to the reporting requirements of Section 313 of the Emergency Planning and Community Right-to-Know Act (Title III of the Superfund Amendments and Reauthorization Act of 1986) and 40 C.F.R. Part 372. Potentially reportable chemicals are indicated with a checkmark in the "EPCRA" column and a Chemical Abstract Services (CAS) registry number is provided for each such chemical in addition to the percent by weight of the chemical present in this product. It is your responsibility alone to determine whether your facility is required to submit a Toxic Release Inventory Report under EPCRA Section 313.

Certification No.: 1070786
Certification Date: 6/14/2013
Issued By: Bryun Jantzen

Bryun Jantzen

This report is issued in compliance with the requirements of EN10204 3.1 / ISO 10474 3.1.b

Material Test Report

FVC Heat Nbr: C965BN

FVC Canada Ltd.
An Ameriforge Group Company
7410A-5 Street S.E. Calgary, Alberta T2H-2L9
ISO 9001:2008 Certified
Sales: (403) 255-9011 Fax: (403) 255-7239

5BLUE PROCESS EQUI 00011689	PO: P6903-5B1108-20	Sales Order: C12826	Line: 2
2303 - 8th STREET	Item Code: HBN160150247A004A1	Qty: 1	
T9E 7Z3 NISKU, AB	Item Desc: 16-150-24.875-2-1-4 HBN,SA350LF2,150#,16x24.		
CA	Mill Heat: 207T673		
Spec: ASME SA350-LF2-CL1: 2010 Edition; 2011 Addenda			

Element	(%wt)	Ladle	Product	EPCRA	CAS#
C	Carbon	0.18			
Mn	Manganese	1.19		✓	7439-96-5
P	Phosphorous	0.009			
S	Sulphur	0.001			
Si	Silicon	0.24			
Cu	Copper	0.22		✓	7440-50-8
Ni	Nickel	0.09		✓	7440-02-0
Cr	Chromium	0.08		✓	7440-47-3
Mo	Molybdenum	0.015			
V	Vanadium	0.021			
Cb	Columbium (N	0.002			
Sn	Tin	0.010			

Element	(%wt)	Ladle	Product	EPCRA	CAS#
B	Boron	0.0003			
Ti	Titanium	0.002		✓	7440-02-0
Al	Aluminum	0.025			
Ca	Calcium	0.0015			
N	Nitrogen	0.0079			
As	Arsenic	0.004		✓	7440-38-2
Sb	Antimony	0.005		✓	7440-36-0
CE	C+Mn/6+(Cr+M	0.42			
Cu+Ni+Cr+Mo+V		0.43			
Cr+Mo		0.10			
Cb+V		0.023			

Mechanical Testing

Test Lab	AMF 55250
BHN	143 - 143
Elg (%)	36.00
RA (%)	70.00
Tensile (ksi)	76.365
Yield (ksi)	48.127
Specimen Orientation	Longitudinal
Charpy (ft-lbs)	65 - 54 - 74
Charpy Temp (F)	-50
Avg Energy 3 Specimens (ft-lbs)	64
Min Energy 1 Specimens (ft-lbs)	54
Shear (%)	40-30-40
LatExp(Mils)	51-43-59

Heat Treat

Heat Treatment	Normalized

Other

Country of Origin	USA
Manufactured In	USA
Production Method	EF
Made to Fine Grain Practice	YES

5 Blue Process Equipment Inc. JUN 18 2013 Quality Department

EPCRA Supplier Notification: This product may contain one or more toxic chemicals subject to the reporting requirements of Section 313 of the Emergency Planning and Community Right-to-Know Act (Title III of the Superfund Amendments and Reauthorization Act of 1986) and 40 C.F.R. Part 372. Potentially reportable chemicals are indicated with a checkmark in the "EPCRA" column and a Chemical Abstract Services (CAS) registry number is provided for each such chemical in addition to the percent by weight of the chemical present in this product. It is your responsibility alone to determine whether your facility is required to submit a Toxic Release Inventory Report under EPCRA Section 313.

Certification No.: 1070788
Certification Date: 6/14/2013
Issued By: Bryun Jantzen

This report is issued in compliance with the requirements of EN10204 3.1 / ISO 10474 3.1.b

Material Test Report

FVC Heat Nbr: C965BN

FVC Canada Ltd.
An Ameriforge Group Company
7410A-5 Street S.E. Calgary, Alberta T2H-2L9
ISO 9001:2008 Certified
Sales: (403) 255-9011 Fax: (403) 255-7239

5BLUE PROCESS EQUI 00011689	PO: P6903-5B1108-20	Sales Order: C12826	Line: 2
2303 - 8th STREET	Item Code: HBN160150247A004A1	Qty: 1	
T9E 7Z3 NISKU, AB	Item Desc: 16-150-24.875-2-1-4 HBN,SA350LF2,150#,16x24.		
CA	Mill Heat: 207T673		
Spec: ASME SA350-LF2-CL1: 2010 Edition; 2011 Addenda			

MATERIAL MEETS NACE MR0175 & MR0103 LATEST EDITIONS. CE=C+(Mn/6)+({Cr+Mo+V}/5)+({Ni+Cu}/15),
Elongation in 2" round specimen. YIELD STRENGTH MEASURED AT 0.2% OFFSET.
FVC STANDARD MANUFACTURING PRACTICES:
1) FLANGE DIMENSIONS & BOLTING COMPLY - ASME B16.5.
2)SELF-REINFORCING NOZZLES COMPLY WITH SPECIFICATION OF SECTION VIII DIV. 1 OR DIV. 2 PER CUSTOMER DESIGN/FVC DESIGN.
3) MATERIAL SPECIFICATION COMPLIES WITH ASME SECT. II PART A.
4) ALL FVC MATERIAL MANUFACTURED PER FINE GRAIN PRACTICE.
5) ALL FVC MATERIAL CERTIFIED PER EN 10204 Type 3.1 UNLESS OTHERWISE SPECIFIED.
6) CERTIFICATE OF INSURANCE AVAILABLE UPON REQUEST.
7) PRODUCT FREE OF MERCURY CONTAMINATION.

5 Blue Process Equipment Inc.
JUN 18 2013
Quality Department

EPCRA Supplier Notification: This product may contain one or more toxic chemicals subject to the reporting requirements of Section 313 of the Emergency Planning and Community Right-to-Know Act (Title III of the Superfund Amendments and Reauthorization Act of 1986) and 40 C.F.R. Part 372. Potentially reportable chemicals are indicated with a checkmark in the "EPCRA" column and a Chemical Abstract Services (CAS) registry number is provided for each such chemical in addition to the percent by weight of the chemical present in this product. It is your responsibility alone to determine whether your facility is required to submit a Toxic Release Inventory Report under EPCRA Section 313.

Certification No.: 1070788
Certification Date: 6/14/2013
Issued By: Bryun Jantzen

Bryun Jantzen

This report is issued in compliance with the requirements of EN10204 3.1 / ISO 10474 3.1.b

Material Test Report

FVC Heat Nbr: D603BN

FVC Canada Ltd.
An Ameriforge Group Company
7410A-5 Street S.E. Calgary, Alberta T2H-2L9
ISO 9001:2008 Certified
Sales: (403) 255-9011 Fax: (403) 255-7239

5BLUE PROCESS EQUI 00011689	PO: P6903-5B1108-20	Sales Order: C12826	Line: 5
2303 - 8th STREET	Item Code: HBN200150251A004A1	Qty: 1	
T9E 7Z3 NISKU, AB	Item Desc: 20-150-25.125-2-1-4 HBN,SA350LF2,150#,20x25.		
CA		Mill Heat: 4507761	

Spec: ASME SA350-LF2-CL1: 2010 Edition; 2011 Addenda

Element	(%wt)	Ladle	Product	EPCRA	CAS#	Element	(%wt)	Ladle	Product	EPCRA	CAS#
C	Carbon	0.19				Cb	Columbium (N	0.001			
Mn	Manganese	1.25		✓	7439-96-5	Sn	Tin	0.001			
P	Phosphorous	0.019				Ti	Titanium	0.002		✓	7440-02-0
S	Sulphur	0.008				Al	Aluminum	0.046			
Si	Silicon	0.24				Ca	Calcium	0.0048			
Cu	Copper	0.00		✓	7440-50-8	As	Arsenic	0.00		✓	7440-38-2
Ni	Nickel	0.01		✓	7440-02-0	Sb	Antimony	0.002		✓	7440-36-0
Cr	Chromium	0.02		✓	7440-47-3	CE	C+Mn/6+(Cr+M	0.41			
Mo	Molybdenum	0.00				Cu+Ni+Cr+Mo+V		0.04			
V	Vanadium	0.009				Cr+Mo		0.02			

Mechanical Testing

Test Lab	AMF 54372
BHN	143 - 143
Elg (%)	38.00
RA (%)	68.00
Tensile (ksi)	73.754
Yield (ksi)	46.658
Specimen Orientation	Longitudinal
Charpy (ft-lbs)	76 - 14 - 86
Charpy Temp (F)	-50
Avg Energy 3 Specimens (ft-lbs)	59
Min Energy 1 Specimens (ft-lbs)	14
Shear (%)	100-30-100
LatExp(Mils)	66-19-78

Heat Treat

Heat Treatment	Normalized

Other

Country of Origin	Brazil
Manufactured In	USA
Production Method	BOF
Fully Killed	Y
Reduction Ratio (Mill) x:1	2:1
Gr.Sz.	6
Made to Fine Grain Practice	Y

MATERIAL MEETS NACE MR0175 & MR0103 LATEST EDITIONS. CE=C+(Mn/6)+((Cr+Mo+V)/5)+((Ni+Cu)/15),
Elongation in 2" round specimen. YIELD STRENGTH MEASURED AT 0.2% OFFSET.
FVC STANDARD MANUFACTURING PRACTICES:
1) FLANGE DIMENSIONS & BOLTING COMPLY - ASME B16.5.
2) SELF-REINFORCING NOZZLES COMPLY WITH SPECIFICATION OF SECTION VIII DIV. 1 OR DIV. 2 PER CUSTOMER DESIGN/FVC DESIGN.
3) MATERIAL SPECIFICATION COMPLIES WITH ASME SECT. II PART A.
4) ALL FVC MATERIAL MANUFACTURED PER FINE GRAIN PRACTICE.
5) ALL FVC MATERIAL CERTIFIED PER EN 10204 Type 3.1 UNLESS OTHERWISE SPECIFIED.
6) CERTIFICATE OF INSURANCE AVAILABLE UPON REQUEST.
7) PRODUCT FREE OF MERCURY CONTAMINATION.

5 Blue Process Equipment Inc. JUN 18 2013 Quality Department

EPCRA Supplier Notification: This product may contain one or more toxic chemicals subject to the reporting requirements of Section 313 of the Emergency Planning and Community Right-to-Know Act (Title III of the Superfund Amendments and Reauthorization Act of 1986) and 40 C.F.R. Part 372. Potentially reportable chemicals are indicated with a checkmark in the "EPCRA" column and a Chemical Abstract Services (CAS) registry number is provided for each such chemical in addition to the percent by weight of the chemical present in this product. It is your responsibility alone to determine whether your facility is required to submit a Toxic Release Inventory Report under EPCRA Section 313.

Certification No.: 1070886
Certification Date: 6/17/2013
Issued By: Bryun Jantzen

Bryun Jantzen

This report is issued in compliance with the requirements of EN10204 3.1 / ISO 10474 3.1.b

5Blue
Process Equipment Inc.

RECEIVING INSPECTION REPORT

DATE: JUN 0 6 2013 **PURCHASE ORDER#** 1108-20

CUSTOMER/OWNER_____

DESCRIPTION OF MATERIAL:	PLATE	TUBE /PIPE	BAR	FITTINGS	

		YES	NO
1	MATERIALS CORRECT TO PURCHASE ORDER:	✓	
2	MTR SUPPLIED WITH MATERIALS	✓	
3	MTR CHECKED AGAINST PACKING SLIP	✓	
4	MTR CORRECT FOR THIS MATERIAL	✓	
5	IS MATERIALS IN GOOD CONDITION (NO DAMAGE):	✓	
6	IS MATERIAL THE SAME SIZE AND SCHEDULE AS REQUIRED ON THE PURCHASE ORDER:	✓	
7	IS MATERIAL THE CORRECT GRADE AS REQUIRED ON THE PURCHASE ORDER	✓	
8	IS THE MATERIAL LEGIBLY MARKED FROM THE SUPPLIER? THIS MAY BE STAMPED or STENCILED (record Grade. Type, Heat # And any other relevant information)	✓	

5 Blue Process Equipment Inc. JUN 0 6 2013 Quality Department

NOTE: If any of these inspection steps cannot be completed the inspector shall notify the QS ASAP. The QS shall make out a NCR detailing the discrepancies and the material in question shall be quarantined until a satisfactory solution to the problem can be resolved. This may include rework or sending the material back to the supplier

Inspector :_____ **Signature:** _____ **Date** JUN 0 6 2013

ROSEMARY KUNTZ
SAFETY / MTR
(780) 955-2040E:229

Trans Am

PIPING PRODUCTS LTD.

Shipped Date
Jun 4, 2013

Sold To
lue Process Equipment Inc.
2303 - 8 Street
Nisku, Ab

T9E 7Z3
Ordered By Troy

Ship To

Ph# 780 955-2040

Customer P.O.#	Job# / Tag#	T/A Sales Order #
P6910-5B1108-20		E13 - 27638 -01

Shipping Instructions	Freight	Date Ordered
DELIVER WED SHIP & B/O		May 28, 2013

Item	Description	Qty.Ord.	Um	Qty.Ship.	Backorder	Heat #	Mnf
4	2" SCH 160 LR 90 BW ELBOW A420-WPL6	1	EA	1		3-86942	SKB

Total MTR's Listed 1

Manufacturer's Legend & Alberta CRN #

SKB Sung Kwang Bend Co. Ltd.
OA13361.52 Exp. Aug 2019

Blue Process Equipment Inc. JUN 06 2013 Quality Department

Weight Shipped	Skid	Crate	Sack	Box	Loose	Loose Pipe	Pipe Bundle	Misc.	Trans Am Representative
4 Lbs.				1					Matthew (Moe) O'Donnell

is a Registered Trademark of
Trans Am Piping Products Ltd.

Packing List / MTR Summary

1711 - 66th. Avenue, Edmonton, Alberta T6P 1Y9
Ph# (780) 440-4567 Fax# (780) 440-1488

2" SCH 160 LR 90 BW ELBOW
A420-WPL6

PO# P6910-5B1108-20 Item# 4
Heat Number: 3-86942
Trans Am Piping Products Ltd. - Rev'd By: SJ
P.O. Seq #: EL-12 - 10465 1

MATERIAL TEST & INSPECTION CERTIFICATE

SUNGKWANG BEND CO., LTD.(SKB)
1720, Songjeong-Dong, Gangseo-Ku,Busan,Korea
TEL : 82-051-3300-450
FAX : 82-051-3300-335
http://www.skbend.com

CUSTOMER: ALLIED FITTINGS
PROJECT NAME: N/A

According to
DIN 50049 3.1 / EN 10204 3.1 / ISO 10474 3.1

PURCHASE ORDER NO.	71311ASB	SPEC. FOR MATERIAL	ASTM A420WPL6-S 07, ASME SA420WPL6-S 07ED	CERTIFICATE NO.	QCLA2012060003
PJT NO.	N/A	SPEC. FOR INSPECTION	ASME B16.9	DATE OF ISSUE	2012.06.11
STARTING MATERIAL	SEAMLESS PIPE	SKB NO.	2011071503	VISUAL & DIMENSION	SATISFACTORY

NO.	SEQ/LINE/ITEM NO	DESCRIPTION					QTY	HEAT NO.	MFG ID NO.	MILL MAKER	POR/CODE/TAG NO
102		90D ELBOW(L)	S160	2"	B.W SMLS	Black	647	3-86942	3-86942	JFE STEEL	
119		90D ELBOW(L)	X-S	4"	B.W SMLS	Black	1,000	2-76300	2-76300	JFE STEEL	

CHEMICAL COMPOSITION(%) (L : LADLE, P : PRODUCT)

STD. / HEAT NO.	SPEC.	C	Si	Mn	P	S	Ni	Cr	Mo	Cu	V	Nb	N	Al	B	Zr	Fe	Ti	C.E
	MIN		0.15	0.50															
	MAX	0.23	0.40	1.35	0.035	0.040	0.40	0.30	0.12	0.40	0.08	0.02							0.42
2-76300	L	0.14	0.20	0.86	0.012	0.005	0.01	0.03	0.01	0.02	<0.001	<0.001							0.29
	P																		
3-86942	L	0.13	0.23	0.86	0.012	0.002	0.01	0.03	0.01	<0.01	0.001	0.001							0.28
	P																		

TENSILE TEST

SPEC.	Y.S 0.2% offset KSI	T.S KSI	EL. %	R.A %
MIN	35.0	60.0	30.0	
MAX		85.0		
	41.5	68.5	40.0	
	41.6	62.8	45.0	

IMPACT TEST / HEAT NO.	TEST TEMP.	SIZE OF SPECIMEN(mm)		ABSORBED ENERGY STD. /9/10FLbf.Min./Ave. VALUE			AVE.	LATERAL EXPANSION STD. / VALUE			AVE.	PERCENT SHEAR STD. / VALUE			AVE.
2-76300	-45℃	10x7.5	B/M	146.00	147.50	144.00	145.83								
			HAZ												
			WM												
3-86942	-45℃	10x7.5	B/M	148.30	151.80	143.20	147.77								
			HAZ												
			WM												

HARDNESS HB	MIN	MAX
		Z37
	HB	147
	HB	143

HEAT TREATMENT	NORMALIZED. 900℃, 30Min., "Air"		
PMI	N/A	N.D.E	N/A
FLATTENING TEST	N/A	**MEMO	
BENDING TEST	N/A		
HYDROSTATIC TEST	N/A		
CORROSION TEST	N/A		
GRAIN SIZE TEST	N/A		
HIC TEST	N/A		

- MANUFACTURED IN ACCOR. TO DIN 50049-3.1 & MEET NACE MR0175 & 0103-2003 STANDARD SPEC

WE CERTIFY THIS MATERIAL HAS BEEN MANUFACTURED AND EXAMINED IN ACCORDANCE WITH ALL REQUIREMENTS OF THE SPECIFICATION AND THE RESULTS OF ALL EXAMINATION ARE ACCEPTABLE.

5 Blue Pipe Equipment Inc. JUN 06 2013 Quality Department

☐ REVIEWED BY
☐ WITNESSED BY : _____

QM DIV. SENIOR MANAGING DIRECTOR

5Blue
Process Equipment Inc.

RECEIVING INSPECTION REPORT

DATE: JUN 1 3 2013 PURCHASE ORDER# 1108-20

CUSTOMER/OWNER_____

DESCRIPTION OF MATERIAL:	PLATE	TUBE /PIPE	BAR	FITTINGS	

		YES	NO
1	MATERIALS CORRECT TO PURCHASE ORDER:	✓	
2	MTR SUPPLIED WITH MATERIALS	✓	
3	MTR CHECKED AGAINST PACKING SLIP	✓	
4	MTR CORRECT FOR THIS MATERIAL	✓	
5	IS MATERIALS IN GOOD CONDITION (NO DAMAGE):	✓	
6	IS MATERIAL THE SAME SIZE AND SCHEDULE AS REQUIRED ON THE PURCHASE ORDER:	✓	
7	IS MATERIAL THE CORRECT GRADE AS REQUIRED ON THE PURCHASE ORDER	✓	
8	IS THE MATERIAL LEGIBLY MARKED FROM THE SUPPLIER? THIS MAY BE STAMPED or STENCILED (record Grade. Type, Heat # And any other relevant information)	✓	

5 Blue Process Equipment Inc. JUN 1 3 2013 Quality Department

NOTE: If any of these inspection steps cannot be completed the inspector shall notify the QS ASAP. The QS shall make out a NCR detailing the discrepancies and the material in question shall be quarantined until a satisfactory solution to the problem can be resolved. This may include rework or sending the material back to the supplier

Inspector :_____ Signature: _____ Date JUN 1 3 2013

ROSEMARY KUNTZ
SAFETY / MTR
(780) 955-2040E:226

Forged Vessel Connections, Canada Limited
(a subsidiary of AmeriForge Group Inc.)
7410A-5 Street S.E., Calgary, Alberta T2H-2L9
Phone (403) 255-9011 or toll free (800) 382-3490
Fax 403-255-7239
www.ameriforgegroup.com/fvc/

Packing List

Shipper ID: SHPR13794
Ship Date: 06/11/13
Print Date: 06/11/13

SOLD TO: 00011689
5BLUE PROCESS EQUIPMENT
2303 - 8th STREET
NISKU, AB T9E 7Z3
Canada

SHIP TO: 00011689
5BLUE PROCESS EQUIPMENT
2303 - 8th STREET
NISKU, AB T9E 7Z3
Canada

Ship Via: ROSENAU PPD FOB Point: Ex Works	Mode of Transportation: Carrier Shipment Refer: SHPR13794	Customer Contact: Phone:
Bill of Lading #:	Remarks:	Salesman:

Line #	Item# Description	Cust. PO# SO#-Ln #	Heat Code	UM	HC Qty Shipped	Qty. Ordered	Qty. BO	Qty. Shipped Cum. Shipped
	***							
	THANK YOU FOR YOUR ORDER - PLEASE REVIEW AND ADVISE OF ANY DISCREPANCIES.							
	***							
	REF: JOB #5B1108-20							
	***							
1	LWN040150120A004A1	P6903-5B1108-20		EA				2.00 2.00
	4-150-12-1-1-4	C12826-4				2.0	0	
	LWN,SA350LF2,150#,4"x12",RF		C910BN		2.0			
	(SUB FOR 10 3/4")							
	ITEM ID: FLG-RFLWN-040-01-120-LF2							
	ITEM #: 12607							
2	LWN060150120A004A1	P6903-5B1108-20		EA				1.00 1.00
	6-150-12-1-1-4	C12826-3				1.0	0	
	LWN,SA350LF2,150#,6"x12",RF		C907BN		1.0			
	(SUB FOR 10 7/8")							
	ITEM ID: FLG-RFLWN-060-01-120-LF2							
	ITEM #: 12608							

Shipment Weight Summary

Description	Quantity	Net Weight	Tare Weight	Gross Weight	Weight UM
4-150-12-1-1-4	2.0	94.0	0.0	94.0	LB
6-150-12-1-1-4	1.0	75.0	0.0	75.0	LB
		169.0	0.0	169.0	

5 Blue Process Equipment Inc. JUN 13 2013 Quality Department

RECEIVED JUN 12 2013

Packed By: _____ **Loaded By:** _____ **Verified By:** _____

MTR

Material Test Report

FVC Heat Nbr: C910BN

FVC Canada Ltd.
An Ameriforge Group Company
7410A-5 Street S.E. Calgary, Alberta T2H-2L9
ISO 9001:2008 Certified
Sales: (403) 255-9011 Fax: (403) 255-7239

5BLUE PROCESS EQUI 00011689	PO: P6903-5B1108-20	Sales Order: C12826	Line: 4
2303 - 8th STREET	Item Code: LWN040150120A004A1	Qty: 2	
T9E 7Z3 NISKU, AB	Item Desc: LWN,SA350LF2,150#,4"x12",RF		
CA		Mill Heat: A113791	
Spec: ASME SA350-LF2-CL1: 2010 Edition; 2011 Addenda			

Element	(%wt)	Ladle	Product	EPCRA	CAS#
C	Carbon	0.19			
Mn	Manganese	1.14		✓	7439-96-5
P	Phosphorous	0.010			
S	Sulphur	0.005			
Si	Silicon	0.27			
Cu	Copper	0.12		✓	7440-50-8
Ni	Nickel	0.06		✓	7440-02-0
Cr	Chromium	0.08		✓	7440-47-3
Mo	Molybdenum	0.03			
V	Vanadium	0.031			
Cb	Columbium (N	0.002			

Element	(%wt)	Ladle	Product	EPCRA	CAS#
Sn	Tin	0.008			
Ti	Titanium	0.001		✓	7440-02-0
Al	Aluminum	0.030			
Ca	Calcium	0.0016			
N	Nitrogen	0.0080			
As	Arsenic	0.005		✓	7440-38-2
Sb	Antimony	0.002		✓	7440-36-0
CE	C+Mn/6+(Cr+M	0.42			
Cu+Ni+Cr+Mo+V		0.32			
Cr+Mo		0.11			
Cb+V		0.033			

Mechanical Testing

Test Lab	AMF 51728
BHN	146 - 146
Elg (%)	34.00
RA (%)	70.00
Tensile (ksi)	77.038
Yield (ksi)	50.367
Charpy (ft-lbs)	73 - 84 - 54
Charpy Temp (F)	-50
Avg Energy 3 Specimens (ft-lbs)	70
Min Energy 1 Specimens (ft-lbs)	54
Shear (%)	50-60-40
LatExp(Mils)	53-60-38

Heat Treat

Heat Treatment	Normalized

Other

Country of Origin	USA
Manufactured In	USA
Production Method	EAF
Fully Killed	Y
Reduction Ratio (Mill) x:1	5.5:1
Gr.Sz.	7
Made to Fine Grain Practice	Y

MATERIAL MEETS NACE MR0175 & MR0103 LATEST EDITIONS. CE=C+(Mn/6)+({Cr+Mo+V}/5)+({Ni+Cu}/15),
Elongation in 2" round specimen. YIELD STRENGTH MEASURED AT 0.2% OFFSET.
FVC STANDARD MANUFACTURING PRACTICES:
1) FLANGE DIMENSIONS & BOLTING COMPLY - ASME B16.5.
2) SELF-REINFORCING NOZZLES COMPLY WITH SPECIFICATION OF SECTION VIII DIV. 1 OR DIV. 2 PER CUSTOMER DESIGN/FVC DESIGN.
3) MATERIAL SPECIFICATION COMPLIES WITH ASME SECT. II PART A.
4) ALL FVC MATERIAL MANUFACTURED PER FINE GRAIN PRACTICE.
5) ALL FVC MATERIAL CERTIFIED PER EN 10204 Type 3.1 UNLESS OTHERWISE SPECIFIED.
6) CERTIFICATE OF INSURANCE AVAILABLE UPON REQUEST.
7) PRODUCT FREE OF MERCURY CONTAMINATION.

5 Blue Process Equipment Inc. JUN 13 2013 Quality Department

EPCRA Supplier Notification: This product may contain one or more toxic chemicals subject to the reporting requirements of Section 313 of the Emergency Planning and Community Right-to-Know Act (Title III of the Superfund Amendments and Reauthorization Act of 1986) and 40 C.F.R. Part 372. Potentially reportable chemicals are indicated with a checkmark in the "EPCRA" column and a Chemical Abstract Services (CAS) registry number is provided for each such chemical in addition to the percent by weight of the chemical present in this product. It is your responsibility alone to determine whether your facility is required to submit a Toxic Release Inventory Report under EPCRA Section 313.

Certification No.: 1070413
Certification Date: 6/11/2013
Issued By: Bryun Jantzen

Bryun Jantzen

This report is issued in compliance with the requirements of EN10204 3.1 / ISO 10474 3.1.b

Material Test Report

FVC Heat Nbr: C907BN

FVC Canada Ltd.
An Ameriforge Group Company
7410A-5 Street S.E. Calgary, Alberta T2H-2L9
ISO 9001:2008 Certified
Sales: (403) 255-9011 Fax: (403) 255-7239

5BLUE PROCESS EQUI 00011689	PO: P6903-5B1108-20	Sales Order: C12826	Line: 3
2303 - 8th STREET	Item Code: LWN060150120A004A1	Qty: 1	
T9E 7Z3 NISKU, AB	Item Desc: LWN,SA350LF2,150#,6"x12",RF		
CA		Mill Heat: K9154	
Spec: ASME SA350-LF2-CL1: 2010 Edition; 2011 Addenda			

Element	(%wt)	Ladle	Product	EPCRA	CAS#
C	Carbon	0.18			
Mn	Manganese	1.21		✓	7439-96-5
P	Phosphorous	0.007			
S	Sulphur	0.003			
Si	Silicon	0.27			
Cu	Copper	0.14		✓	7440-50-8
Ni	Nickel	0.06		✓	7440-02-0
Cr	Chromium	0.05		✓	7440-47-3
Mo	Molybdenum	0.02			
V	Vanadium	0.001			
Cb	Columbium (N	0.002			
Sn	Tin	0.008			

Element	(%wt)	Ladle	Product	EPCRA	CAS#
B	Boron	0.0003			
Ti	Titanium	0.002		✓	7440-02-0
Al	Aluminum	0.037			
Ca	Calcium	0.0026			
N	Nitrogen	0.0059			
As	Arsenic	0.0040		✓	7440-38-2
Sb	Antimony	0.002		✓	7440-36-0
CE	C+Mn/6+(Cr+M	0.41			
Cu+Ni+Cr+Mo+V		0.27			
Cr+Mo		0.07			
Cb+V		0.003			

Mechanical Testing

Test Lab	AMF 51286
BHN	143 - 143
Elg (%)	38.00
RA (%)	72.00
Tensile (ksi)	71.450
Yield (ksi)	46.360
Specimen Orientation	LONGITUDINAL
Charpy (ft-lbs)	51 - 66 - 29
Charpy Temp (F)	-50
Avg Energy 3 Specimens (ft-lbs)	49
Min Energy 1 Specimens (ft-lbs)	29
Shear (%)	30-30-30
LatExp(Mils)	43-53-23

Heat Treat

Heat Treatment	Normalized

Other

Country of Origin	USA
Manufactured In	USA
Production Method	EAF
Fully Killed	Y
Reduction Ratio (Mill) x:1	15.6:1
Gr.Sz.	5.0
Made to Fine Grain Practice	Y

5 Blue Process Equipment Inc. JUN 13 2013 Quality Department

EPCRA Supplier Notification: This product may contain one or more toxic chemicals subject to the reporting requirements of Section 313 of the Emergency Planning and Community Right-to-Know Act (Title III of the Superfund Amendments and Reauthorization Act of 1986) and 40 C.F.R. Part 372. Potentially reportable chemicals are indicated with a checkmark in the "EPCRA" column and a Chemical Abstract Services (CAS) registry number is provided for each such chemical in addition to the percent by weight of the chemical present in this product. It is your responsibility alone to determine whether your facility is required to submit a Toxic Release Inventory Report under EPCRA Section 313.

Certification No.: 1070410
Certification Date: 6/11/2013
Issued By: Bryun Jantzen

This report is issued in compliance with the requirements of EN10204 3.1 / ISO 10474 3.1.b

Material Test Report

FVC Heat Nbr: C907BN

FVC Canada Ltd.
An Ameriforge Group Company
7410A-5 Street S.E. Calgary, Alberta T2H-2L9
ISO 9001:2008 Certified
Sales: (403) 255-9011 Fax: (403) 255-7239

5BLUE PROCESS EQUI 00011689	PO: P6903-5B1108-20	Sales Order: C12826	Line: 3
2303 - 8th STREET	Item Code: LWN060150120A004A1	Qty: 1	
T9E 7Z3 NISKU, AB	Item Desc: LWN,SA350LF2,150#,6"x12",RF		
CA	Mill Heat: K9154		
Spec: ASME SA350-LF2-CL1: 2010 Edition; 2011 Addenda			

MATERIAL MEETS NACE MR0175 & MR0103 LATEST EDITIONS. CE=C+(Mn/6)+({Cr+Mo+V}/5)+({Ni+Cu}/15),
Elongation in 2" round specimen. YIELD STRENGTH MEASURED AT 0.2% OFFSET.
FVC STANDARD MANUFACTURING PRACTICES:
1) FLANGE DIMENSIONS & BOLTING COMPLY - ASME B16.5.
2) SELF-REINFORCING NOZZLES COMPLY WITH SPECIFICATION OF SECTION VIII DIV. 1 OR DIV. 2 PER CUSTOMER DESIGN/FVC DESIGN.
3) MATERIAL SPECIFICATION COMPLIES WITH ASME SECT. II PART A.
4) ALL FVC MATERIAL MANUFACTURED PER FINE GRAIN PRACTICE.
5) ALL FVC MATERIAL CERTIFIED PER EN 10204 Type 3.1 UNLESS OTHERWISE SPECIFIED.
6) CERTIFICATE OF INSURANCE AVAILABLE UPON REQUEST.
7) PRODUCT FREE OF MERCURY CONTAMINATION.

5 Blue Process Equipment Inc. JUN 13 2013 Quality Department

EPCRA Supplier Notification: This product may contain one or more toxic chemicals subject to the reporting requirements of Section 313 of the Emergency Planning and Community Right-to-Know Act (Title III of the Superfund Amendments and Reauthorization Act of 1986) and 40 C.F.R. Part 372. Potentially reportable chemicals are indicated with a checkmark in the "EPCRA" column and a Chemical Abstract Services (CAS) registry number is provided for each such chemical in addition to the percent by weight of the chemical present in this product. It is your responsibility alone to determine whether your facility is required to submit a Toxic Release Inventory Report under EPCRA Section 313.

Certification No.: 1070410
Certification Date: 6/11/2013
Issued By: Bryun Jantzen

Bryun Jantzen

This report is issued in compliance with the requirements of EN10204 3.1 / ISO 10474 3.1.b

5Blue
Process Equipment Inc.

RECEIVING INSPECTION REPORT

DATE: JUL 0 3 2013 PURCHASE ORDER# 1108-20

CUSTOMER/OWNER _____ Heads

DESCRIPTION OF MATERIAL:	PLATE	TUBE /PIPE	BAR	FITTINGS	

		YES	NO
1	MATERIALS CORRECT TO PURCHASE ORDER:	✓	
2	MTR SUPPLIED WITH MATERIALS	✓	
3	MTR CHECKED AGAINST PACKING SLIP	✓	
4	MTR CORRECT FOR THIS MATERIAL	✓	
5	IS MATERIALS IN GOOD CONDITION (NO DAMAGE):	✓	
6	IS MATERIAL THE SAME SIZE AND SCHEDULE AS REQUIRED ON THE PURCHASE ORDER:	✓	
7	IS MATERIAL THE CORRECT GRADE AS REQUIRED ON THE PURCHASE ORDER	✓	
8	IS THE MATERIAL LEGIBLY MARKED FROM THE SUPPLIER? THIS MAY BE STAMPED or STENCILED (record Grade. Type, Heat # And any other relevant information)	✓	

5Blue Process Equipment Inc. JUL 0 3 2013 Quality Department

NOTE: If any of these inspection steps cannot be completed the inspector shall notify the QS ASAP. The QS shall make out a NCR detailing the discrepancies and the material in question shall be quarantined until a satisfactory solution to the problem can be resolved. This may include rework or sending the material back to the supplier

JUL 0 3 2013

Inspector :_____ Signature: _____ Date _____

ROSEMARY KUNTZ
SAFETY / MTR
(780) 955-2040E:228

2013/06/26 8:44:52

C99147

edmonton exchanger
& manufacturing ltd.

5545-89 Street Edmonton, Alberta Canada T6E 5W9 www.edmontonexchanger.com tel 780.468.6722 • fax 780.466.5155

Packing List

Bill To
5BLUE PROCESS EQUIPMENT INC.
2303-8 ST.
NISKU, AB T9E 7Z3
CANADA

Ship To
5BLUE PROCESS EQUIPMENT INC.
2303-8 ST.
NISKU, AB T9E 7Z3
CANADA

Order Date	Ordered By	Customer Order#	Ship Via	Freight	Order Taken By
2013/5/23	ROB	P6860-5B1108-20	DUNRITE	COLLECT	KO

Total Weight	Credit Terms	Packing List #	Packing Date
2,032#	NET 30 DAYS	146216	2013/6/26

Job#	Ord	Description	Weight/Lot	Backord	Ship
		UNLESS SPECIFIED OTHERWISE: SUPPLY MATERIAL, CUT, ROLL/FORM & WELD/TACKWELD WHERE APPLICABLE ALL WORK TO COMPLY WITH ASME SECTION VIII DIV. I AND ASME SECTION IX, INCLUDING WELD REPAIRS ALL MATERIAL TO COMPLY WITH ASME SECTION II COUNTRY OF ORIGIN RESTRICTIONS DO NOT APPLY			
9147-1	2	HEAD(S) - Semi-Elliptical 2:1 - 0.6250" NOM (0.5312" MIN) X 66" ID Material Grades: SA 516-70 N Ex Edm Exch Condition: N (Normalized) Charpy: Cond N, Longitudinal, -50 F, 15/12 FT.LB, Miscellaneous: Certification: NACE MR0175 / ISO 15156-2 2009 Annex A Other Testing/QC: Brinell Hardness: <=200HB Brinell Hardness Test HB = _____ (If HB is on MTR, do not test, record number!) UT: Grid 4", SA 435 Tag: 5B1108-20 (Grease) Bevel Details: Trim to 2" S.F (Inside Depth 18_1/2") 30 Deg O/S Bevel No Land	2,032#		2

5 Blue Process Equipment Inc. JUL 03 2013 Quality Department

Edmonton Exchanger Shipper Sign. _____

Date Shipped Jun 27/13

Drivers are responsible for ensuring that their vehicles are properly loaded and that their loads are safely secured in accordance with all transport regulations.

Carrier Signature _____

CERTIFICATE OF COMPLIANCE

edmonton exchanger
& manufacturing ltd.

5545-89 Street Edmonton, Alberta Canada T6E 5W9 www.edmontonexchanger.com tel 780.468.6722 • QC fax 780.466.4668 • sales fax 780.466.5155

Customer 5BLUE PROCESS EQUIPMENT INC. PO P6860-5B1108-20 Work Order C99147 Date 2013/06/25 CofC# 41948

Item#	Description	Qty	Heat#	Brinell Hardn.	Required Min Thk	Recorded Min Thk	Form. Proc.
H99147-1	HEAD(S) - Semi-Elliptical 2:1 - 0.6250" NOM (0.5312" MIN) X 66" ID (Material Spec: SA 516-70 Normalized)	1	G8271-270020415	MTR	0.5312"	0.5950"	1
		1	G8266-270020501	MTR	0.5312"	0.5950"	1
	Conforms to NACE MR0175 / ISO 15156-2 2009 Annex A						

Forming Procedure:
1. Hot Formed @ 1650F/899C and Air Cooled

Brinell Equipment: Newage Calibrated Pin
Brinell Hardness Tester

Supplementary Requirements

Normalized Material Identification Marking:
'MT' indicates normalized by the mill per ASME Code Section II, Part A, SA 20, Paragraph 13.1.1.
'GMT' indicates normalized by Edmonton Exchanger per ASME Code Section II, Part A, SA 20, Paragraph 13.1.2.
'GT' indicates normalized by Edmonton Exchanger per ASME Code Section VIII Division 1, UG-85 or ASME Code Section I, PG-77.4.

The item(s) listed above comply with the requirements of ASME Code Section I, PG-29, PG-81 and ASME Code Section VIII, Division 1, UCS-79(d), UG-79 & UG-81. All welders and procedures are qualified to ASME Code Section IX. Material being supplied conforms to the latest ASME Code Section II, Part A, 2010 Edition, Addenda July 1, 2011.

Supplementary Examination - Items

Edmonton Exchanger

UT: SA 435

(for -1)
Acceptable to ASME Code

EE Procedure:	**UIP-001 REV.10**
Equipment:	**Krautkramer USN-58L**
Serial No.:	**010X9H**
Transducer:	**Benchmark**
Calibration:	**Plate**
Grid:	**4 "**
Material:	**SA 516-70 N**
Examination Surface / Side:	**Tight Scale**
Trans Type:	**1", 2 1/4 MHz, 0 deg**
Primary Ref. Res. dB 100%:	**38**
Scanning Sens. dB:	**50**
Range Cal. In.:	**3**
Coaxial Cables`:	**BNC 8 ft long**
Search Unit Serial No.:	**00V5J3**
Couplant:	**Water**
Tech:	**Tracy Enman (#11226)**
CGSB / SNT:	**Level II**
Time:	**Day Shift**
Date:	**2013/05/31**

5 Blue Process Equipment Inc. JUL 03 2013 Quality Department

edmonton exchanger
& manufacturing ltd.

5545-89 Street Edmonton, Alberta Canada T6E 5W9 www.edmontonexchanger.com tel 780.468.6722 • QC fax 780.466.4668 • sales fax 780.466.5155

CERTIFICATE OF COMPLIANCE

MTR List

Customer 5BLUE PROCESS EQUIPMENT PO P6860-5B1108-20 Work Order C99147 Date 2013/06/25 CofC# 41948

Email to ango@5blue.com

Email to jdery-brochu@5blue.com

Email to kolsen@edmontonexchanger.com

MTR ID	Pages	Heat#	Thickness	Material Grades
17695	5	G8271-270020415	.625"	SA 516-70 N
17696	8	G8266-270020501	.625"	SA 516-70 N

Heat#	Material Grades	MTR ID
G8266-270020501	SA 516-70 N	17696
G8271-270020415	SA 516-70 N	17695



B

注文者 SHIPPER : HANWA CO., LTD.
注文者照合番号 REFERENCE No. : 228410-685211000
契約番号 CONTRACT No. : 3-811-H1-5-3-AT01
商品名 COMMODITY : HOT ROLLED STEEL PLATES
規格 SPECIFICATION : ASME SA-516 GRADE 70-E10-A11 (AS PER EN 10204 CERTIFICATE ON MATERIAL TESTS 3.1)
文書番号 DOCUMENT No. : 需要家 CUSTOMER : EDMONTON EXCHANGER GROUP OF C-OMPANIES 需要家管理番号 CUSTOMER'S CONTROL No. : E10911-J1010ER E3001A02Q0 E05

新日鐵住金株式会社
NIPPON STEEL & SUMITOMO METAL CORPORATION

本社 HEAD OFFICE : 〒100-8071 東京都千代田区丸の内二丁目6番1号 2-6-1, MARUNOUCHI, CHIYODA-KU, TOKYO 100-8071, JAPAN
君津製鐵所 KIMITSU WORKS : 〒299-1141 千葉県君津市君津1番地 1, KIMITSU, KIMITSU-CITY, CHIBA-PREF. 299-1141 JAPAN

鋼材検査証明書
INSPECTION CERTIFICATE

証明書番号 CERTIFICATE No. : P-22373 PAGE : 23
発行年月日 DATE OF ISSUE : 2013-03-25
1001 2**DM***** *****CEW**

寸法 DIMENSION mm,':inch,':feet	員数 QUANTITY	質量 MASS KG	製鋼番号 CAST No. / 試験番号 TEST No.	製品番号 PLATE No.	LOCATION ORIENTATION GL	引張試験 TENSILE TEST 耐力降伏点 YS 0.2% KSI	引張強さ TS	伸び EL %	%	BEND TEST 曲げ試験	LOCATION ORIENTATION SIZE	衝撃試験 IMPACT TEST 2V-50F FT.LB 平均値 AVG	個々値 EACH	HBW	化学成分 CHEMICAL COMPOSITION % C ×100	Si ×100	Mn ×100	P ×1000	S ×1000	Cu ×100	Ni ×100	Cr ×100	Mo ×100	Nb ×100 ~×1000	V ×100 ~×1000	Ti Al ×100	Ceq. 1 ×100	熱処理状態 CONDITION OF SUPPLY
															N	TE3	TE1			CA	B	TI		Pcm	Sol. Al	Ceq. 2	
03			G8267	TESTED-PL									227	AVG	16	38	144	8	2	1	2	2	0	12	0	34	41	
0.500'X120.5'X480'	1	3721	04821	270020305	TC	55	77	28			TL	F233	227	157		25	2	5			17	1	0					
													244															
														P	16	39	143	8	2	1	2	2	0	13	0		40	
																27		5			22	1	0					
03			G8267	FROM									227	AVG	16	38	144	8	2	1	2	2	0	12	0	34	41	
0.500'X120.5'X480'	3	11163	04821	270020306	TC	55	77	28			TL	F233	227	157		25	2	5			17	1	0					
				TO									244															
				270020308										P	16	39	143	8	2	1	2	2	0	13	0		40	
																27		5			22	1	0					
04			G7788	TESTED-PL									265	AVG	16	37	145	10	2	1	1	2	0	11	0	25	41	
0.625'X96.5'X480'	1	3726	01860	270020401	TC	54	76	28			TL	F219	133	153		24	2	4			18	0	0					
													258															
														P	15	38	143	9	2	1	1	1	0	11	0		39	
																27		3			23	2	0					

注釈 NOTES ※1 Location Orientation 位置・方向, T:頂部 Top, B:底部 Bottom, L:圧延方向 Longitudinal, C:直角方向 Transverse, Z:板厚方向 Through Thickness, R:45° 方向 45Deg. to the Longitudinal Axis
※2 GL 標点距離 Gage Length, A:50mm 平形試験片 Rectangular, B:50mm 丸形試験片 Round, C:70mm 平形試験片 Rectangular, D:70mm 丸形試験片 Round, E:80mm 平形試験片 Rectangular, F:80mm 丸形試験片 Round, G:200mm, H:2", I:8", J:5.65$\sqrt{So}$, K:4$\sqrt{So}$
※3 RA:絞り Reduction of Area, YR:降伏比 Yield Ratio, ※4 A:合格 Acceptable, ※5 F:標準寸法 FULL SIZE, 2:2.5mm, 3:3.3mm, 4:3.33mm, 5:5.0mm, 6:6.67mm, 7:7.5mm, 8:6.7mm, 9:製品板厚 PlateThickness, ※6 P:製品分析 Product Analysis,
※7 N:焼準 Normalized, Q:焼入れ Quenched, T:焼戻し Tempered, CR:Controlled Rolled, NIC:NIC Process/TMC Process, CLC:CLC Process/TMC Process, AR:As Rolled, TMR:TMR Process/TMC Process, NR:Normalizing Rolled
SH:延性破面率 Shear Fracture, CF:脆性破面率 Crystallinity Fracture, LE:横膨出 Lateral Expansion, AGS:オーステナイト粒度 Austenite Grain Size, FGS:フェライト粒度 Ferrite Grain Size, SR:Stress Relieved/Post Weld Heat Treatment
温度 Temperature °C °F

上記注文品は御指定の規格または仕様に従って製造され、その要求事項を満足していることを証明します。

WE HEREBY CERTIFY THAT THE MATERIAL DESCRIBED HEREIN HAS BEEN MADE IN ACCORDANCE WITH THE RULES OF THE CONTRACT.

17695

J. Adachi

君津製鐵所 品質保証室長
HEAD OF DEPARTMENT
QUALITY ASSURANCE DEPT.
KIMITSU WORKS

AY4002302512

B

注文者 SHIPPER : HANWA CO., LTD.
注文者照合番号 REFERENCE No. : 228410-685211000
契約番号 CONTRACT No. : 3-811-H1-5-3-AT01
商品名 COMMODITY : HOT ROLLED STEEL PLATES
規格 SPECIFICATION : ASME SA-516 GRADE 70-E10-A11
文書番号 DOCUMENT No. :
需要家 CUSTOMER : EDMONTON EXCHANGER GROUP OF C-OMPANIES

新日鐵住金株式会社
NIPPON STEEL & SUMITOMO METAL CORPORATION

鋼材検査証明書
INSPECTION CERTIFICATE

(AS PER EN 10204 CERTIFICATE ON MATERIAL TESTS 3.1)

本社 HEAD OFFICE : 〒100-8071 東京都千代田区丸の内二丁目6番1号 2-6-1, MARUNOUCHI, CHIYODA-KU, TOKYO 100-8071, JAPAN
君津製鐵所 KIMITSU WORKS : 〒299-1141 千葉県君津市君津1番地 1, KIMITSU, KIMITSU-CITY, CHIBA-PREF. 299-1141 JAPAN

証明書番号 CERTIFICATE No. : P-22373
頁 PAGE : 24
発行年月日 DATE OF ISSUE : 2013-03-25
1001
需要家管理番号 CUSTOMER'S CONTROL No. : E10911-J1010ER E3001A02Q0 E05
2**DM*****
*****CEW**

寸法 DIMENSION mm,":inch,':feet	員数 QUANTITY	質量 MASS KG	製鋼番号 CAST No. / 試験番号 TEST No.	製品番号 PLATE No.	LOCATION ORIENTATION GL	引張試験 TENSILE TEST 耐力降伏点 YS 0.2% KSI	引張強さ TS KSI	伸び EL %	%	BEND TEST 曲げ試験	LOCATION ORIENTATION SIZE	衝撃試験 IMPACT TEST 2V-50F FT.LB 平均値 AVG	個々値 EACH	HBW	化学成分 CHEMICAL COMPOSITION % C	Si	Mn	P	S	Cu	Ni	Cr	Mo	Nb	V	TAl	Ceq.1	熱処理状態 CONDITION OF SUPPLY
	04		G7788	FROM									265	AVG	16	37	145	10	2	1	1	2	0	11	0	25	41	
0.625"X96.5"X480"	2	7452	01860	270020402	TC	54	76	28			TL	F219	133	153		24	2	4			18	0	0					
				TO									258															
				270020403																								
															P15	38	143	9	2	1	1	1	0	11	0		39	
																27		3			23	2	0					
	04		G8265	TESTED-PL									231	AVG	16	37	146	8	3	1	2	2	0	12	0	33	41	
0.625"X96.5"X480"	1	3726	04764	270020404	TC	55	77	28			TL	F223	196	153		28	2	5			17	1	0					
													242															
															P16	38	148	8	3	1	2	2	0	12	0		41	
																29		5			20	2	0					
	04		G8271	TESTED-PL									156	AVG	16	37	142	11	2	1	2	2	0	11	0	32	40	
0.625"X96.5"X480"	1	3726	04857	270020413	TC	55	77	28			TL	F188	161	155		33	2	5			17	0	0					
													248															
															P16	38	142	11	2	1	2	2	0	12	0		40	
																31		5			22	2	0					

注釈 NOTES
※1 Location Orientation 位置・方向, T:頭部 Top, B:底部 Bottom, L:圧延方向 Longitudinal, C:直角方向 Transverse, Z:板厚方向 Through Thickness, R:45° 方向 45Deg. to the Longitudinal Axis
※2 GL 標点距離 Gage Length, A:50mm 平形試験片 Rectangular, B:50mm 丸形試験片 Round, C:70mm 平形試験片 Rectangular, D:70mm 丸形試験片 Round, E:80mm 平形試験片 Rectangular, F:80mm 丸形試験片 Round, G:200mm, H:2", I:8", J:5.65$\sqrt{So}$, K:4$\sqrt{So}$
※3 RA:絞り Reduction of Area, YR:降伏比 Yield Ratio, ※4 A:合格 Acceptable, ※5 F:標準寸法 FULL SIZE, 2:2.5mm, 3:3.3mm, 4:3.33mm, 5:5.0mm, 6:6.67mm, 7:7.5mm, 8:6.7mm, 9:製品板厚 PlateThickness, ※6 P:製品分析 Product Analysis,
※7 N:焼準 Normalized, Q:焼入れ Quenched, T:焼戻し Tempered, CR:Controlled Rolled, NIC:NIC Process/TMC Process, CLC:CLC Process/TMC Process, AR:As Rolled, TMR:TMR Process/TMC Process, NR:Normalizing Rolled
SH:延性破面率 Shear Fracture, CF:脆性破面率 Crystallinity Fracture, LE:横膨出 Lateral Expansion, AGS:オーステナイト粒度 Austenite Grain Size, FGS:フェライト粒度 Ferrite Grain Size, SR:Stress Relieved/Post Weld Heat Treatment
温度 Temperature C: F:

上記注文品は御指定の規格または仕様に従って製造され、その要求事項を満足していることを証明します。

WE HEREBY CERTIFY THAT THE MATERIAL DESCRIBED HEREIN HAS BEEN MADE IN ACCORDANCE WITH THE RULES OF THE CONTRACT.

J. Adachi
君津製鐵所 品質保証室長
HEAD OF DEPARTMENT
QUALITY ASSURANCE DEPT.
KIMITSU WORKS

AY4002402512

B

注文者 SHIPPER : HANWA CO., LTD.
注文者照合番号 REFERENCE No. : 228410-685211000
契約番号 CONTRACT No. : 3-811-H1-5-3-AT01
商品名 COMMODITY : HOT ROLLED STEEL PLATES
規格 SPECIFICATION : ASME SA-516 GRADE 70-E10-A11 (AS PER EN 10204 CERTIFICATE ON MATERIAL TESTS 3.1)
文書番号 DOCUMENT No. :
需要家 CUSTOMER : EDMONTON EXCHANGER GROUP OF C-OMPANIES

新日鐵住金株式会社
NIPPON STEEL & SUMITOMO METAL CORPORATION

鋼材検査証明書
INSPECTION CERTIFICATE

本社 HEAD OFFICE : 〒100-8071 東京都千代田区丸の内二丁目6番1号 2-6-1, MARUNOUCHI, CHIYODA-KU, TOKYO 100-8071, JAPAN
君津製鐵所 KIMITSU WORKS : 〒299-1141 千葉県君津市君津1番地 1, KIMITSU, KIMITSU-CITY, CHIBA-PREF, 299-1141 JAPAN

証明書番号 CERTIFICATE No. : P-22373
頁 PAGE : 25
発行年月日 DATE OF ISSUE : 2013-03-25
1001
需要家管理番号 CUSTOMER'S CONTROL No. : E10911-J1010ER E3001A02Q0 E05
2**DM*****
*****CEW**

寸法 DIMENSION mm,':inch,':feet	員数 QUANTITY	質量 MASS KG	製鋼番号 CAST No. / 試験番号 TEST No.	製品番号 PLATE No.	LOCATION ORIENTATION GL ※1 ※2	引張試験 TENSILE TEST 耐力降伏点 YS 0.2% KSI	引張強さ TS KSI	伸び EL %	% ※3	BEND TEST 曲げ試験 ※4	LOCATION ORIENTATION SIZE ※1 ※5	衝撃試験 IMPACT TEST 2V-50F FT.LB 平均値 AVG	個々値 EACH	HBW	化学成分 CHEMICAL COMPOSITION % C ×100	Si ×100	Mn ×100	P ×1000	S ×1000	Cu ×100	Ni ×100	Cr ×100	Mo ×100	Nb ×100	V ×100	TAl ×100	Ceq.1 ×100	CONDITION OF SUPPLY ※7
															N ×1000	TE3 ×1000	TE1 ×100			CA ×10000	B ×10000	TI ×100		Pcm ×100	Sol. Al ×100	Ceq.2 ×100	
04			G8271	TESTED-PL									233	AVG	16	37	142	11	2	2	2	0	11	0	32	40	
0.625"X96.5"X480"	1	3726	04859	270020405	TCI	55	77	27			TLF	231	237	155		33	2	5		17	0	0					
													222														
															P16	38	142	11	2	2	2	0	12	0		40	
																31		5		22	2	0					
04			G8271	FROM									233	AVG	16	37	142	11	2	2	2	0	11	0	32	40	
0.625"X96.5"X480"	3	11178	04859	270020406	TCI	55	77	27			TLF	231	237	155		33	2	5		17	0	0					
				TO									222														
				270020408											P16	38	142	11	2	2	2	0	12	0		40	
																31		5		22	2	0					

注釈 NOTES
※1 Location Orientation 位置・方向, T:頂部 Top, B:底部 Bottom, L:圧延方向 Longitudinal, C:直角方向 Transverse, Z:板厚方向 Through Thickness, R:45° 方向 45Deg. to the Longitudinal Axis
※2 GL 標点距離 Gage Length, A:50mm 平形試験片 Rectangular, B:50mm 丸形試験片 Round, C:70mm 平形試験片 Rectangular, D:70mm 丸形試験片 Round, E:80mm 平形試験片 Rectangular, F:80mm 丸形試験片 Round, G:200mm, H:2", I:8", J:5.65$\sqrt{So}$, K:4$\sqrt{So}$
※3 RA:絞り Reduction of Area, YR:降伏比 Yield Ratio, ※4 A:合格 Acceptable, ※5 F:標準寸法 FULL SIZE, 2:2.5mm, 3:3.3mm, 4:3.33mm, 5:5.0mm, 6:6.67mm, 7:7.5mm, 8:6.7mm, 9:製品板厚 PlateThickness, ※6 P:製品分析 Product Analysis,
※7 N:焼準 Normalized, Q:焼入れ Quenched, T:焼戻し Tempered, CR:Controlled Rolled, NIC:NIC Process/TMC Process, CLC:CLC Process/TMC Process, AR:As Rolled, TMR:TMR Process/TMC Process, NR:Normalizing Rolled
SH:延性破面率 Shear Fracture, CF:脆性破面率 Crystallinity Fracture, LE:横膨出 Lateral Expansion, AGS:オーステナイト粒度 Austenite Grain Size, FGS:フェライト粒度 Ferrite Grain Size, SR:Stress Relieved/Post Weld Heat Treatment
温度 Temperature C:°C F:°F

上記注文品は御指定の規格または仕様に従って製造され、その要求事項を満足していることを証明します。

WE HEREBY CERTIFY THAT THE MATERIAL DESCRIBED HEREIN HAS BEEN MADE IN ACCORDANCE WITH THE RULES OF THE CONTRACT.

Blue Process Equipment Inc. JUL 03 2013 Quality Department

T. Adachi
君津製鐵所 品質保証室長
HEAD OF DEPARTMENT
QUALITY ASSURANCE DEPT.
KIMITSU WORKS

AY4002502512

B

注文者 SHIPPER : HANWA CO., LTD.
注文者照合番号 REFERENCE No. : 228410-685211000
契約番号 CONTRACT No. : 3-811-H1-5-3-AT01
商品名 COMMODITY : HOT ROLLED STEEL PLATES
規格 SPECIFICATION : ASME SA-516 GRADE 70-E10-A11
文書番号 DOCUMENT No. :

新日鐵住金株式会社
NIPPON STEEL & SUMITOMO METAL CORPORATION

鋼材検査証明書
INSPECTION CERTIFICATE

(AS PER EN 10204 CERTIFICATE ON MATERIAL TESTS 3.1)

需要家 CUSTOMER : EDMONTON EXCHANGER GROUP OF C-OMPANIES

本社 HEAD OFFICE : 〒100-8071 東京都千代田区丸の内二丁目6番1号 2-6-1, MARUNOUCHI, CHIYODA-KU, TOKYO 100-8071, JAPAN
君津製鐵所 KIMITSU WORKS : 〒299-1141 千葉県君津市君津1番地 1, KIMITSU, KIMITSU-CITY, CHIBA-PREF. 299-1141 JAPAN

証明書番号 CERTIFICATE No. : P-22373

発行年月日 DATE OF ISSUE : 2013-03-25
1001
需要家管理番号 CUSTOMER'S CONTROL No. : E10911-J1010ER E3001A02Q0 E05
2**DM*****
*****CEW**

寸法 DIMENSION mm,″:inch,′:feet	員数 QUANTITY	質量 MASS KG	製鋼番号 CAST No. / 試験番号 TEST No.	製品番号 PLATE No.	LOCATION ORIENTATION GL ※1	引張試験 TENSILE TEST 耐力降伏点 YS 0.2% KSI	引張強さ TS KSI	伸び EL %	% ※3	BEND TEST 冷間曲げ試験	LOCATION ORIENTATION ※1	SIZE	衝撃試験 IMPACT TEST 2V-50F FT.LB 平均値 AVG	個々値 EACH	HBW	化学成分 CHEMICAL COMPOSITION % C ×100 −1000	Si ×100	Mn ×100	P ×1000	S ×1000	Cu ×100	Ni ×100	Cr ×100	Mo ×100	Nb −100 ×1000	V −100 ×1000	TAl ×100	Ceq.1 ×100	CONDITION OF SUPPLY ※7
04			G8271	TESTED-PL										250													
0.625″X96.5″X480″	1	3726	04865	270020409	TC	I 54	77	28		TL	F	243	240	239	AVG 155	16	37 33	142 2	11 5	2	1	2 17	2 0	0 0	11	0	32	40	
															P	16	38 31	142	11 5	2	1	2 22	2 2	0 0	12	0		40	
04			G8271	FROM										250													
0.625″X96.5″X480″	3	11178	04865	270020410 TO 270020412	TC	I 54	77	28		TL	F	243	240	239	AVG 155	16	37 33	142 2	11 5	2	1	2 17	2 0	0 0	11	0	32	40	
															P	16	38 31	142	11 5	2	1	2 22	2 2	0 0	12	0		40	
05			G8266	TESTED-PL										134													
0.625″X120.5″X480″	1	4654	04778	270020501	TC	I 56	78	27		TL	F	153	215	111	AVG 156	16	37 27	144 2	6 4	3	1	1 15	2 0	0 0	11	0	33	41	
															P	17	38 28	146	6 4	3	1	1 21	2 1	0 0	12	0		42	

注釈 NOTES
※1 Location Orientation 位置・方向, T:頭部 Top, B:底部 Bottom, L:圧延方向 Longitudinal, C:直角方向 Transverse, Z:板厚方向 Through Thickness, R:45° 方向 45Deg. to the Longitudinal Axis
※2 GL 標点距離 Gage Length, A:50mm 平形試験片 Rectangular, B:50mm 丸形試験片 Round, C:70mm 平形試験片 Rectangular, D:70mm 丸形試験片 Round, E:80mm 平形試験片 Rectangular, F:80mm 丸形試験片 Round, G:200mm, H:2″, I:8″, J:5.65$\sqrt{So}$, K:4$\sqrt{So}$
※3 RA:絞り Reduction of Area, YR:降伏比 Yield Ratio, ※4 A:合格 Acceptable, ※5 F:標準寸法 FULL SIZE, 2:2.5mm, 3:3.3mm, 4:3.33mm, 5:5.0mm, 6:6.67mm, 7:7.5mm, 8:6.7mm, 9:製品板厚 PlateThickness, ※6 P:製品分析 Product Analysis,
※7 N:焼準 Normalized, Q:焼入れ Quenched, T:焼戻し Tempered, CR:Controlled Rolled, NIC:NIC Process/TMC Process, CLC:CLC Process/TMC Process, AR:As Rolled, TMR:TMR Process/TMC Process, NR:Normalizing Rolled
SH:延性破面率 Shear Fracture, CF:脆性破面率 Crystallinity Fracture, LE:横膨出 Lateral Expansion, AGS:オーステナイト粒度 Austenite Grain Size, FGS:フェライト粒度 Ferrite Grain Size, SR:Stress Relieved/Post Weld Heat Treatment
温度 Temperature C: °C F: °F

上記注文品は御指定の規格または仕様に従って製造され、その要求事項を満足していることを証明します。

WE HEREBY CERTIFY THAT THE MATERIAL DESCRIBED HEREIN HAS BEEN MADE IN ACCORDANCE WITH THE RULES OF THE CONTRACT.

5 Blue Process Equipment Inc. JUL 03 2013 Quality Department

J. Adachi
君津製鐵所 品質保証室長
HEAD OF DEPARTMENT
QUALITY ASSURANCE DEPT.
KIMITSU WORKS

AY4002602512

B

注文者 SHIPPER: HANWA CO., LTD.
注文者照合番号 REFERENCE No.: 228410-685211000
契約番号 CONTRACT No.: 3-811-H1-5-3-AT01
商品名 COMMODITY: HOT ROLLED STEEL PLATES
規格 SPECIFICATION: ASME SA-516 GRADE 70-E10-A11
文書番号 DOCUMENT No.:

新日鐵住金株式会社
NIPPON STEEL & SUMITOMO METAL CORPORATION

鋼材検査証明書
INSPECTION CERTIFICATE

(AS PER EN 10204 CERTIFICATE ON MATERIAL TESTS 3.1)

需要家 CUSTOMER: EDMONTON EXCHANGER GROUP OF C-OMPANIES

本社 HEAD OFFICE: 〒100-8071 東京都千代田区丸の内二丁目6番1号 2-6-1, MARUNOUCHI, CHIYODA-KU, TOKYO 100-8071, JAPAN
君津製鐵所 KIMITSU WORKS: 〒299-1141 千葉県君津市君津1番地 1, KIMITSU, KIMITSU-CITY, CHIBA-PREF. 299-1141 JAPAN

証明書番号 CERTIFICATE No.: P-22373
頁 PAGE: 50E
発行年月日 DATE OF ISSUE: 2013-03-25
1001
需要家管理番号 CUSTOMER'S CONTROL No.: E10911-J1010ER E3001A02Q0 E05
2**DM*****
*****CEW**

寸法 DIMENSION mm,':inch,':feet	員数 QUANTITY	質量 MASS KG	製鋼番号 CAST No. / 試験番号 TEST No.	製品番号 PLATE No.	引張試験 TENSILE TEST: LOCATION ORIENTATION	耐力 Y.S 0.2% KSI	引張強さ T.S KSI	伸び EL %	BEND TEST	衝撃試験 IMPACT TEST 2V - 50F FT. LB: LOCATION ORIENTATION / SIZE / 吸収エネルギー 平均値 AVG / 個々値 EACH	HBW	化学成分 CHEMICAL COMPOSITION %	熱処理 HEAT TREATMENT CONDITION
				HEAT TREATMENT.									
				PLATE & TEST SPECIMEN NORMALIZING : 910CX 10MIN.									
				CHARPY IMPACT TEST TEMPERATURE (SI) : - 46C									
				LADLE CEQ1 = C+MN/6+(NI+CU)/15+(CR+MO+V)/5									
				PRODUCT CEQ1 = C+MN/6+(NI+CU)/15+(CR+MO+V)/5									
				LADLE TE1 = CU+NI+CR+MO									
				LADLE TE3 = CR+MO									
				PRODUCT TE1 = CU+NI+CR+MO									
				CHEMICAL COMPOSITION % : "N" X10000									
				CHEMICAL COMPOSITION % : "TE3" X100									
				LADLE TREATMENT : VACUUM DEGASSED									
				SULPHIDE SHAPE CONTROL									

化学成分 CHEMICAL COMPOSITION %	C	Si	Mn	P	S	Cu	Ni	Cr	Mo	Nb	V	Ti	Ceq
倍率	×100	×100	×100	×1000	×1000	×100	×100	×100	×100	×100	×100	×100	×100
値			N	TE3	TE1			CA	B			TI	Pcm / Sol.Al / Ceq

MTR APPROVED EDMONTON EXCHANGER

注 NOTES
注1 Location Orientation 位置・方向, T:頂部 Top, B:底部 Bottom, L:圧延方向 Longitudinal, C:直角方向 Transverse, Z:板厚方向 Through Thickness, R:45° 方向 45Deg. to the Longitudinal Axis
注2 GL:標点間距離 Gage Length, A:50mm 平形試験片 Rectangular, B:50mm 丸形試験片 Round, C:70mm 平形試験片 Rectangular, D:70mm 丸形試験片 Round, E:80mm 平形試験片 Rectangular, F:80mm 丸形試験片 Round, G:200mm, H:2", I:8", J:5.65√So, K:4√So
注3 RA:絞り Reduction of Area, YR:降伏比 Yield Ratio, 注4 A:合格 Acceptable, 注5 F:板厚寸法 FULL SIZE, 2:2.5mm, 3:3.3mm, 4:3.33mm, 5:5.0mm, 6:6.67mm, 7:7.5mm, 8:6.7mm, 9:製品板厚 PlateThickness, 注6 P:製品分析 Product Analysis, 温度 Temperature
注7 N:焼ノ Normalized, Q:焼入れ Quenched, T:焼戻し Tempered, CR:Controlled Rolled, NIC:NIC Process/TMC Process, CLC:CLC Process/TMC Process, AR:As Rolled, TMR:TMR Process/TMC Process, NR:Normalizing Rolled
SH:延性破面率 Shear Fracture, CF:脆性破面率 Crystallinity Fracture, LE:横拡がり Lateral Expansion, AGS:オーステナイト結晶 Austenite Grain Size, FGS:フェライト結晶 Ferrite Grain Size, SR:Stress Relieved/Post Weld Heat Treatment

上記注文品は御指定の規格または仕様に従って製造され、その要求事項を満足していることを証明します。

WE HEREBY CERTIFY THAT THE MATERIAL DESCRIBED HEREIN HAS BEEN MADE IN ACCORDANCE WITH THE RULES OF THE CONTRACT.

T. Adachi

君津製鐵所 品質保証室長
HEAD OF DEPARTMENT
QUALITY ASSURANCE DEPT.
KIMITSU WORKS

AX4005002512

B

注文者 SHIPPER : HANWA CO., LTD.
注文者照合番号 REFERENCE No. : 228410-685211000
契約番号 CONTRACT No. : 3-811-H1-5-3-AT01
商品名 COMMODITY : HOT ROLLED STEEL PLATES
規格 SPECIFICATION : ASME SA-516 GRADE 70-E10-A11
文書番号 DOCUMENT No. :

新日鐵住金株式会社
NIPPON STEEL & SUMITOMO METAL CORPORATION

鋼材検査証明書
INSPECTION CERTIFICATE

(AS PER EN 10204 CERTIFICATE ON MATERIAL TESTS 3.1)

需要家 CUSTOMER : EDMONTON EXCHANGER GROUP OF COMPANIES

本社 HEAD OFFICE : 〒100-8071 東京都千代田区丸の内二丁目6番1号 2-6-1, MARUNOUCHI, CHIYODA-KU, TOKYO 100-8071, JAPAN
君津製鐵所 KIMITSU WORKS : 〒299-1141 千葉県君津市君津1番地 1, KIMITSU, KIMITSU-CITY, CHIBA-PREF, 299-1141 JAPAN

証明書番号 CERTIFICATE No. : P-22373 頁 PAGE : 26
発行年月日 DATE OF ISSUE : 2013-03-25
1001 2**DM*****
*****CEW**
需要家管理番号 CUSTOMER'S CONTROL No. : E10911-J1010ER E3001A02Q0 E05

寸法 DIMENSION mm,':inch,':feet	員数 QUANTITY	質量 MASS KG	製鋼番号 CAST No. / 試験番号 TEST No.	製品番号 PLATE No.	LOCATION ORIENTATION GL	引張試験 TENSILE TEST 耐力降伏点 YS 0.2% KSI	引張強さ TS KSI	伸び EL %	%	BEND TEST 曲げ試験	LOCATION ORIENTATION	衝撃試験 IMPACT TEST 2V-50F FT.LB 平均値 AVG	個々値 EACH	HBW	化学成分 CHEMICAL COMPOSITION % C	Si	Mn	P	S	Cu	Ni	Cr	Mo	Nb	V	Ti	Al	Ceq.	CONDITION OF SUPPLY
					※1										×100	×100	×100	×1000	×1000	×100	×100	×100	×100	×100	×100	×100	×100	×100	※7
04			G8271	TESTED-PL											16	37	142	11	2	1	2	2	0	11	0	32	40	
0.625"X96.5"X480"	1	3726	04865	270020409	TC	54	77	28			TL	F243	250 240 239	AVG 155		33	2	5		17	0	0						
															P16	38	142	11	2	1	2	2	0	12	0		40	
																31		5			22	2	0					
04			G8271	FROM											16	37	142	11	2	1	2	2	0	11	0	32	40	
0.625"X96.5"X480"	3	11178	04865	270020410 TO 270020412	TC	54	77	28			TL	F243	250 240 239	AVG 155		33	2	5		17	0	0						
															P16	38	142	11	2	1	2	2	0	12	0		40	
																31		5			22	2	0					
05			G8266	TESTED-PL											16	37	144	6	3	1	1	2	0	11	0	33	41	
0.625"X120.5"X480"	1	4654	04778	270020501	TC	56	78	27			TL	F153	134 215 111	AVG 156		27	2	4		15	0	0						
															P17	38	146	6	3	1	1	2	0	12	0		42	
																28		4			21	1	0					

注釈 NOTES
※1 Location Orientation 位置・方向, T:頭部 Top, B:底部 Bottom, L:圧延方向 Longitudinal, C:直角方向 Transverse, Z:板厚方向 Through Thickness, R:45° 方向 45Deg. to the Longitudinal Axis
※2 GL 標点距離 Gage Length, A:50mm 平形試験片 Rectangular, B:50mm 丸形試験片 Round, C:70mm 平形試験片 Rectangular, D:70mm 丸形試験片 Round, E:80mm 平形試験片 Rectangular, F:80mm 丸形試験片 Round, G:200mm, H:2", I:8", J:5.65$\sqrt{So}$, K:4$\sqrt{So}$
※3 RA:絞り Reduction of Area, YR:降伏比 Yield Ratio, ※4 A:合格 Acceptable, ※5 F:標準寸法 FULL SIZE, 2:2.5mm, 3:3.3mm, 4:3.33mm, 5:5.0mm, 6:6.67mm, 7:7.5mm, 8:6.7mm, 9:製品板厚 PlateThickness, ※6 P:製品分析 Product Analysis,
※7 N:焼準 Normalized, Q:焼入れ Quenched, T:焼戻し Tempered, CR:Controlled Rolled, NIC:NIC Process/TMC Process, CLC:CLC Process/TMC Process, AR:As Rolled, TMR:TMR Process/TMC Process, NR:Normalizing Rolled
SH:延性破面率 Shear Fracture, CF:脆性破面率 Crystallinity Fracture, LE:横膨出 Lateral Expansion, AGS:オーステナイト粒度 Austenite Grain Size, FGS:フェライト粒度 Ferrite Grain Size, SR:Stress Relieved/Post Weld Heat Treatment
温度 Temperature °C °F

上記注文品は御指定の規格または仕様に従って製造され、その要求事項を満足していることを証明します。

WE HEREBY CERTIFY THAT THE MATERIAL DESCRIBED HEREIN HAS BEEN MADE IN ACCORDANCE WITH THE RULES OF THE CONTRACT.

17696

T. Adachi
君津製鐵所 品質保証室長
HEAD OF DEPARTMENT
QUALITY ASSURANCE DEPT.
KIMITSU WORKS

AY4002602512

B

注文者 SHIPPER : HANWA CO., LTD.
注文者照合番号 REFERENCE No. : 228410-685211000
契約番号 CONTRACT No. : 3-811-H1-5-3-AT01
商品名 COMMODITY : HOT ROLLED STEEL PLATES
規格 SPECIFICATION : ASME SA-516 GRADE 70-E10-A11
文書番号 DOCUMENT No. :

新日鐵住金株式会社
NIPPON STEEL & SUMITOMO METAL CORPORATION

鋼材検査証明書
INSPECTION CERTIFICATE

(AS PER EN 10204 CERTIFICATE ON MATERIAL TESTS 3.1)

需要家 CUSTOMER : EDMONTON EXCHANGER GROUP OF COMPANIES

本社 HEAD OFFICE : 〒100-8071 東京都千代田区丸の内二丁目6番1号 2-6-1, MARUNOUCHI, CHIYODA-KU, TOKYO 100-8071, JAPAN
君津製鐵所 KIMITSU WORKS : 〒299-1141 千葉県君津市君津 1 番地 1, KIMITSU, KIMITSU-CITY, CHIBA-PREF. 299-1141 JAPAN

証明書番号 CERTIFICATE No. : P-22373 頁 PAGE : 27
発行年月日 DATE OF ISSUE : 2013-03-25
1001 2**DM*****
*****CEW**
需要家管理番号 CUSTOMER'S CONTROL No. : E10911-J1010ER E3001A02Q0 E05

寸法 DIMENSION mm,":inch,':feet	員数 QUANTITY	質量 MASS KG	製鋼番号 CAST No. / 試験番号 TEST No.	製品番号 PLATE No.	LOCATION ORIENTATION GL	引張試験 TENSILE TEST 耐力降伏点 YS 0.2% KSI	引張強さ TS KSI	伸び EL %	BEND TEST 曲げ試験	LOCATION ORIENTATION	SIZE	衝撃試験 IMPACT TEST 2V-50F FT.LB 平均値 AVG	個々値 EACH	HBW	化学成分 CHEMICAL COMPOSITION % C	Si	Mn	P	S	Cu	Ni	Cr	Mo	Nb	V	TAl	Ceq.1	熱処理 CONDITION OF SUPPLY
	05		G8266	FROM									134	AVG	16	37	144	6	3	1	1	2	0	11	0	33	41	
0.625"X120.5"X480"	2	9308	04778	270020502	TC	56	78	27		TL	F	153	215	156		27	2	4			15	0	0				
				TO									111														
				270020503																							
															P	17	38	146	6	3	1	1	2	0	12	0	42	
																28		4			21	1	0				
	05		G8266	TESTED-PL									217	AVG	16	37	144	6	3	1	1	2	0	11	0	33	41	
0.625"X120.5"X480"	1	4654	04779	270020507	TC	56	79	30		TL	F	181	122	155		27	2	4			15	0	0				
													203														
															P	17	38	146	6	3	1	1	2	0	12	0	42	
																28		4			21	1	0				
	05		G8266	FROM									217	AVG	16	37	144	6	3	1	1	2	0	11	0	33	41	
0.625"X120.5"X480"	2	9308	04779	270020508	TC	56	79	30		TL	F	181	122	155		27	2	4			15	0	0				
				TO									203														
				270020509																							
															P	17	38	146	6	3	1	1	2	0	12	0	42	
																28		4			21	1	0				

注釈 NOTES
※1 Location Orientation 位置・方向, T:頂部 Top, B:底部 Bottom, L:圧延方向 Longitudinal, C:直角方向 Transverse, Z:板厚方向 Through Thickness, R:45° 方向 45Deg. to the Longitudinal Axis
※2 GL 標点距離 Gage Length, A: 50mm 平形試験片 Rectangular, B: 50mm 丸形試験片 Round, C: 70mm 平形試験片 Rectangular, D: 70mm 丸形試験片 Round, E: 80mm 平形試験片 Rectangular, F: 80mm 丸形試験片 Round, G: 200mm, H: 2", I: 8", J: $5.65\sqrt{So}$, K: $4\sqrt{So}$
※3 RA: 絞り Reduction of Area, YR: 降伏比 Yield Ratio, ※4 A:合格 Acceptable, ※5 F: 標準寸法 FULL SIZE, 2: 2.5mm, 3: 3.3mm, 4: 3.33mm, 5: 5.0mm, 6: 6.67mm, 7: 7.5mm, 8: 6.7mm, 9: 製品板厚 PlateThickness, ※6 P: 製品分析 Product Analysis,
※7 N:焼準 Normalized, Q:焼入れ Quenched, T:焼戻し Tempered, CR: Controlled Rolled, NIC: NIC Process/TMC Process, CLC: CLC Process/TMC Process, AR: As Rolled, TMR: TMR Process/TMC Process, NR: Normalizing Rolled
SH:延性破面率 Shear Fracture, CF:脆性破面率 Crystallinity Fracture, LE:横膨出 Lateral Expansion, AGS:オーステナイト粒度 Austenite Grain Size, FGS:フェライト粒度 Ferrite Grain Size, SR: Stress Relieved/Post Weld Heat Treatment
温度 Temperature C: F:

上記注文品は御指定の規格または仕様に従って製造され、その要求事項を満足していることを証明します。

WE HEREBY CERTIFY THAT THE MATERIAL DESCRIBED HEREIN HAS BEEN MADE IN ACCORDANCE WITH THE RULES OF THE CONTRACT.

T. Adachi
君津製鐵所 品質保証室長
HEAD OF DEPARTMENT
QUALITY ASSURANCE DEPT.
KIMITSU WORKS

AY4002702512

B

注文者 SHIPPER : HANWA CO., LTD.
注文者照合番号 REFERENCE No. : 228410-685211000
契約番号 CONTRACT No. : 3-811-H1-5-3-AT01
商品名 COMMODITY : HOT ROLLED STEEL PLATES
規格 SPECIFICATION : ASME SA-516 GRADE 70-E10-A11
文書番号 DOCUMENT No. :
需要家 CUSTOMER : EDMONTON EXCHANGER GROUP OF C-OMPANIES

新日鐵住金株式会社
NIPPON STEEL & SUMITOMO METAL CORPORATION

本社 HEAD OFFICE : 〒100-8071 東京都千代田区丸の内二丁目6番1号 2-6-1, MARUNOUCHI, CHIYODA-KU, TOKYO 100-8071, JAPAN
君津製鐵所 KIMITSU WORKS : 〒299-1141 千葉県君津市君津1番地 1, KIMITSU, KIMITSU-CITY, CHIBA-PREF. 299-1141 JAPAN

鋼材検査証明書
INSPECTION CERTIFICATE

(AS PER EN 10204 CERTIFICATE ON MATERIAL TESTS 3.1)

証明書番号 CERTIFICATE No. : P-22373 頁 PAGE : 28
発行年月日 DATE OF ISSUE : 2013-03-25
1001 2**DM*****
*****CEW**
需要家管理番号 CUSTOMER'S CONTROL No. : E10911-J1010ER E3001A02Q0 E05

寸法 DIMENSION mm,':inch,':feet	員数 QUANTITY	質量 MASS KG	製鋼番号 CAST No. / 試験番号 TEST No.	製品番号 PLATE No.	LOCATION ORIENTATION GL	引張試験 TENSILE TEST 耐力降伏点 YS 0.2% KSI	引張強さ TS KSI	伸び EL %	%	BEND TEST 曲げ試験	LOCATION ORIENTATION	衝撃試験 IMPACT TEST 2V-50F FT.LB 平均値 AVG	個々値 EACH	HBW	化学成分 CHEMICAL COMPOSITION % C	Si	Mn	P	S	Cu	Ni	Cr	Mo	Nb	V	Ti	Al	Ceq.1	熱処理 CONDITION OF SUPPLY
					※1				※3		※1				×100	×100	×100	×1000	×1000	×100	×100	×100	×100	×1000 ~×100	×100 ~×100	×100 ~×100		×100	※7
															N ×1000	TE3 ~×1000	TE1 ×100	×100	×100	CA ×10000	B ×10000	TI ×100		Pcm ×100	Sol. Al ×100	Ceq.2 ×100	
0.625"X120.5"X480"	05 1	4654	G8266 04782	TESTED-PL 270020513	TC	55	78	27		TL	F	131 132 55	206	AVG 155	16	37 27	144 2	6 4	3	1	1 15	2 0	0 0	11	0	33	41	
															P17	38 28	146	6 4	3	1	1 21	2 1	0 0	12	0		42	
0.625"X120.5"X480"	05 1	4654	G8266 04782	270020514	TC	55	78	27		TL	F	131 132 55	206	AVG 155	16	37 27	144 2	6 4	3	1	1 15	2 0	0 0	11	0	33	41	
															P17	38 28	146	6 4	3	1	1 21	2 1	0 0	12	0		42	
0.625"X120.5"X480"	05 1	4654	G8266 04791	TESTED-PL 270020504	TC	56	79	32		TL	F	138 109 143	163	AVG 156	16	37 27	144 2	6 4	3	1	1 15	2 0	0 0	11	0	33	41	
															P17	38 28	146	6 4	3	1	1 21	2 1	0 0	12	0		42	

注釈 NOTES
※1 Location Orientation 位置・方向, T:頂部 Top, B:底部 Bottom, L:圧延方向 Longitudinal, C:直角方向 Transverse, Z:板厚方向 Through Thickness, R:45° 方向 45Deg. to the Longitudinal Axis
※2 GL 標点距離 Gage Length, A: 50mm 平形試験片 Rectangular, B: 50mm 丸形試験片 Round, C: 70mm 平形試験片 Rectangular, D: 70mm 丸形試験片 Round, E: 80mm 平形試験片 Rectangular, F: 80mm 丸形試験片 Round, G: 200mm, H: 2", I: 8", J: $5.65\sqrt{So}$, K: $4\sqrt{So}$
※3 RA : 絞り Reduction of Area, YR:降伏比 Yield Ratio, ※4 A:合格 Acceptable, ※5 F:標準寸法 FULL SIZE, 2:2.5mm, 3:3.3mm, 4:3.33mm, 5:5.0mm, 6:6.67mm, 7:7.5mm, 8:6.7mm, 9:製品板厚 PlateThickness, ※6 P:製品分析 Product Analysis,
※7 N:焼準 Normalized, Q:焼入れ Quenched, T:焼戻し Tempered, CR: Controlled Rolled, NIC: NIC Process/TMC Process, CLC: CLC Process/TMC Process, AR: As Rolled, TMR: TMR Process/TMC Process, NR: Normalizing Rolled
SH:延性破面率 Shear Fracture, CF:脆性破面率 Crystallinity Fracture, LE:横膨出 Lateral Expansion, AGS:オーステナイト粒度 Austenite Grain Size, FGS:フェライト粒度 Ferrite Grain Size, SR: Stress Relieved/Post Weld Heat Treatment
温度 Temperature °C °F

上記注文品は御指定の規格または仕様に従って製造され、その要求事項を満足していることを証明します。

WE HEREBY CERTIFY THAT THE MATERIAL DESCRIBED HEREIN HAS BEEN MADE IN ACCORDANCE WITH THE RULES OF THE CONTRACT.

T. Adachi
君津製鐵所 品質保証室長
HEAD OF DEPARTMENT
QUALITY ASSURANCE DEPT.
KIMITSU WORKS

AY4002802512

B

注文者 SHIPPER : HANWA CO., LTD.
注文者照合番号 REFERENCE No. : 228410-685211000
契約番号 CONTRACT No. : 3-811-H1-5-3-AT01
商品名 COMMODITY : HOT ROLLED STEEL PLATES
規格 SPECIFICATION : ASME SA-516 GRADE 70-E10-A11
文書番号 DOCUMENT No. :

新日鐵住金株式会社
NIPPON STEEL & SUMITOMO METAL CORPORATION

鋼材検査証明書
INSPECTION CERTIFICATE

(AS PER EN 10204 CERTIFICATE ON MATERIAL TESTS 3.1)

需要家 CUSTOMER : EDMONTON EXCHANGER GROUP OF C-OMPANIES

本社 HEAD OFFICE : 〒100-8071 東京都千代田区丸の内二丁目6番1号 2-6-1, MARUNOUCHI, CHIYODA-KU, TOKYO 100-8071, JAPAN
君津製鐵所 KIMITSU WORKS : 〒299-1141 千葉県君津市君津1番地 1, KIMITSU, KIMITSU-CITY, CHIBA-PREF. 299-1141 JAPAN

証明書番号 CERTIFICATE No. : P-22373 PAGE : 29
発行年月日 DATE OF ISSUE : 2013-03-25
1001 2**DM***** *****CEW**
需要家管理番号 CUSTOMER'S CONTROL No. : E10911-J1010ER E3001A02Q0 E05

寸法 DIMENSION mm,':inch,':feet	員数 QUANTITY	質量 MASS KG	製鋼番号 CAST No. / 試験番号 TEST No.	製品番号 PLATE No.	LOCATION ORIENTATION ※1	引張試験 TENSILE TEST GL ※2	耐力降伏点 YS 0.2% KSI	引張強さ TS KSI	伸び EL %	% ※3	BEND TEST 合否 ※4	LOCATION ORIENTATION ※1	SIZE ※5	衝撃試験 IMPACT TEST 2V-50F FT.LB 平均値 AVG	個々値 EACH	HBW	化学成分 CHEMICAL COMPOSITION % C ×100	Si ×100	Mn ×100	P ×1000	S ×1000	Cu ×100	Ni ×100	Cr ×100	Mo ×100	Nb ×100 <1000	V ×100 <1000	Ti ×100	Ceq.1 ×100	CONDITION OF SUPPLY ※7
	05		G8266	FROM											163	AVG	16	37	144	6	3	1	1	2	0	11	0	33	41	
0.625'X120.5'X480'	2	9308	04791	270020505	TC	56	79	32			TL	F	138	109	156		27	2	4			15	0	0					
				TO										143															
				270020506												P	17	38	146	6	3	1	1	2	0	12	0		42
																		28		4			21	1	0					
	05		G8266	TESTED-PL											222	AVG	16	37	144	6	3	1	1	2	0	11	0	33	41	
0.625'X120.5'X480'	1	4654	04792	27002051 0	TC	57	79	28			TL	F	176	151	156		27	2	4			15	0	0					
														155															
																P	17	38	146	6	3	1	1	2	0	12	0		42
																		28		4			21	1	0					
	05		G8266	FROM											222	AVG	16	37	144	6	3	1	1	2	0	11	0	33	41	
0.625'X120.5'X480'	2	9308	04792	270020511	TC	57	79	28			TL	F	176	151	156		27	2	4			15	0	0					
				TO										155															
				270020512												P	17	38	146	6	3	1	1	2	0	12	0		42
																		28		4			21	1	0					

注釈 NOTES

※1 Location Orientation 位置・方向, T:頭部 Top, B:底部 Bottom, L:圧延方向 Longitudinal, C:直角方向 Transverse, Z:板厚方向 Through Thickness, R:45° 方向 45Deg. to the Longitudinal Axis

※2 GL 標点距離 Gage Length, A:50mm 平形試験片 Rectangular, B:50mm 丸形試験片 Round, C:70mm 平形試験片 Rectangular, D:70mm 丸形試験片 Round, E:80mm 平形試験片 Rectangular, F:80mm 丸形試験片 Round, G:200mm, H:2", I:8", J:5.65$\sqrt{So}$, K:4$\sqrt{So}$

※3 RA :絞り Reduction of Area, YR:降伏比 Yield Ratio, ※4 A:合格 Acceptable, ※5 F:標準寸法 FULL SIZE, 2:2.5mm, 3:3.3mm, 4:3.33mm, 5:5.0mm, 6:6.67mm, 7:7.5mm, 8:6.7mm, 9:製品板厚 PlateThickness, ※6 P:製品分析 Product Analysis,

※7 N:焼準 Normalized, Q:焼入れ Quenched, T:焼戻し Tempered, CR:Controlled Rolled, NIC:NIC Process/TMC Process, CLC:CLC Process/TMC Process, AR:As Rolled, TMR:TMR Process/TMC Process, NR:Normalizing Rolled

SH:延性破面率 Shear Fracture, CF:脆性破面率 Crystallinity Fracture, LE:横膨出 Lateral Expansion, AGS:オーステナイト粒度 Austenite Grain Size, FGS:フェライト粒度 Ferrite Grain Size, SR:Stress Relieved/Post Weld Heat Treatment

温度 Temperature °C °F

上記注文品は御指定の規格または仕様に従って製造され、その要求事項を満足していることを証明します。

WE HEREBY CERTIFY THAT THE MATERIAL DESCRIBED HEREIN HAS BEEN MADE IN ACCORDANCE WITH THE RULES OF THE CONTRACT.

T. Adachi

君津製鐵所 品質保証室長
HEAD OF DEPARTMENT
QUALITY ASSURANCE DEPT.
KIMITSU WORKS

AY4002902512

B

注文者 SHIPPER : HANWA CO., LTD.
注文者照合番号 REFERENCE No. : 228410-685211000
契約番号 CONTRACT No. : 3-811-H1-5-3-AT01
商品名 COMMODITY : HOT ROLLED STEEL PLATES
規格 SPECIFICATION : ASME SA-516 GRADE 70-E10-A11
文書番号 DOCUMENT No. :

新日鐵住金株式会社
NIPPON STEEL & SUMITOMO METAL CORPORATION

鋼材検査証明書
INSPECTION CERTIFICATE

(AS PER EN 10204 CERTIFICATE ON MATERIAL TESTS 3.1)

需要家 CUSTOMER : EDMONTON EXCHANGER GROUP OF C-OMPANIES

本社 HEAD OFFICE : 〒100-8071 東京都千代田区丸の内二丁目6番1号
2-6-1, MARUNOUCHI, CHIYODA-KU, TOKYO 100-8071, JAPAN
君津製鐵所 KIMITSU WORKS : 〒299-1141 千葉県君津市君津1番地
1, KIMITSU, KIMITSU-CITY, CHIBA-PREF. 299-1141 JAPAN

証明書番号 CERTIFICATE No. : P-22373 頁 PAGE : 30
発行年月日 DATE OF ISSUE : 2013-03-25
1001 2**DM*****
*****CEW**
需要家管理番号 CUSTOMER'S CONTROL No. : E10911-J1010ER E3001A02Q0 E05

寸法 DIMENSION mm,":inch,':feet	員数 QUANTITY	質量 MASS KG	製鋼番号 CAST No. / 試験番号 TEST No.	製品番号 PLATE No.	LOCATION ORIENTATION	GL	引張試験 TENSILE TEST 耐力降伏点 YS 0.2% KSI	引張強さ TS KSI	伸び EL %	%	BEND TEST 曲げ試験	LOCATION ORIENTATION	衝撃試験 IMPACT TEST 2V-50F FT.LB 平均値 AVG	個々値 EACH	HBW	化学成分 CHEMICAL COMPOSITION % C	Si	Mn	P	S	Cu	Ni	Cr	Mo	Nb	V	TAl	Ceq.1	熱処理 CONDITION OF SUPPLY
																×100	×100	×100	×1000	×1000	×100	×100	×100	×100	×100	×100	×100	
																	N	TE3	TE1			CA	B	TI		Pcm	Sol.Al	Ceq.2	
																	×1000	×1000	×100	×100	×100	×10000	×10000	×100		×100	×100	
0.750"X96.5"X480"	06 1	4467	G8271 04856	TESTED-PL 270020607	T	C	54	78	30		T	L	F 258	256	AVG	16	37	142	11	2	1	2	2	0	11	0	32	40	
														246	154		33	2	5			17	0	0					
														273															
															P	16	38	142	10	2	1	2	2	0	12	0		40	
																	32		5			21	1	0					
0.750"X96.5"X480"	06 2	8934	G8271 04856	FROM 270020608 TO 270020609	T	C	54	78	30		T	L	F 258	256	AVG	16	37	142	11	2	1	2	2	0	11	0	32	40	
														246	154		33	2	5			17	0	0					
														273															
															P	16	38	142	10	2	1	2	2	0	12	0		40	
																	32		5			21	1	0					
0.750"X96.5"X480"	06 1	4467	G8271 04864	TESTED-PL 270020601	T	C	52	76	30		T	L	F 222	251	AVG	16	37	142	11	2	1	2	2	0	11	0	32	40	
														184	152		33	2	5			17	0	0					
														230															
															P	16	38	142	10	2	1	2	2	0	12	0		40	
																	32		5			21	1	0					

注釈 NOTES

※1 Location Orientation 位置・方向, T:頭部 Top, B:底部 Bottom, L:圧延方向 Longitudinal, C:直角方向 Transverse, Z:板厚方向 Through Thickness, R:45° 方向 45Deg. to the Longitudinal Axis

※2 GL 標点距離 Gage Length, A: 50mm 平形試験片 Rectangular, B: 50mm 丸形試験片 Round, C: 70mm 平形試験片 Rectangular, D: 70mm 丸形試験片 Round, E: 80mm 平形試験片 Rectangular, F: 80mm 丸形試験片 Round, G: 200mm, H: 2", I: 8", J: $5.65\sqrt{So}$, K: $4\sqrt{So}$

※3 RA: 絞り Reduction of Area, YR:降伏比 Yield Ratio, ※4 A:合格 Acceptable, ※5 F:標準寸法 FULL SIZE, 2: 2.5mm, 3: 3.3mm, 4: 3.33mm, 5: 5.0mm, 6: 6.67mm, 7: 7.5mm, 8: 6.7mm, 9: 製品板厚 PlateThickness, ※6 P:製品分析 Product Analysis,

※7 N:焼準 Normalized, Q:焼入れ Quenched, T:焼戻し Tempered, CR: Controlled Rolled, NIC: NIC Process/TMC Process, CLC: CLC Process/TMC Process, AR: As Rolled, TMR: TMR Process/TMC Process, NR: Normalizing Rolled

SH:延性破面率 Shear Fracture, CF:脆性破面率 Crystallinity Fracture, LE:横拡出 Lateral Expansion, AGS:オーステナイト粒度 Austenite Grain Size, FGS:フェライト粒度 Ferrite Grain Size, SR: Stress Relieved/Post Weld Heat Treatment

温度 Temperature C: °C F: °F

上記注文品は御指定の規格または仕様に従って製造され、その要求事項を満足していることを証明します。

WE HEREBY CERTIFY THAT THE MATERIAL DESCRIBED HEREIN HAS BEEN MADE IN ACCORDANCE WITH THE RULES OF THE CONTRACT.

T. Adachi

君津製鐵所 品質保証室長
HEAD OF DEPARTMENT
QUALITY ASSURANCE DEPT.
KIMITSU WORKS

AY4003002512

B

注文者 SHIPPER : HANWA CO., LTD.
注文者照合番号 REFERENCE No. : 228410-685211000
契約番号 CONTRACT No. : 3-811-H1-5-3-AT01
商品名 COMMODITY : HOT ROLLED STEEL PLATES
規格 SPECIFICATION : ASME SA-516 GRADE 70-E10-A11 (AS PER EN 10204 CERTIFICATE ON MATERIAL TESTS 3.1)
文書番号 DOCUMENT No. :
需要家 CUSTOMER : EDMONTON EXCHANGER GROUP OF C-OMPANIES
需要家管理番号 CUSTOMER'S CONTROL No. : E10911-J1010ER E3001A0200 E05

新日鐵住金株式会社
NIPPON STEEL & SUMITOMO METAL CORPORATION
本社 HEAD OFFICE : 〒100-8071 東京都千代田区丸の内二丁目6番1号 2-6-1, MARUNOUCHI, CHIYODA-KU, TOKYO 100-8071, JAPAN
君津製鐵所 KIMITSU WORKS : 〒299-1141 千葉県君津市君津1番地 1, KIMITSU, KIMITSU-CITY, CHIBA-PREF. 299-1141 JAPAN

鋼材検査証明書
INSPECTION CERTIFICATE

証明書番号 CERTIFICATE No. : P-22373

発行年月日 DATE OF ISSUE : 2013-03-25
1001 2**DM***** *****CEW**

寸法 DIMENSION mm,':inch,':feet	員数 QUANTITY	質量 MASS KG	製鋼番号 CAST No. / 試験番号 TEST No.	製品番号 PLATE No.	LOCATION ORIENTATION 試1	GL 試2	引張試験 TENSILE TEST 耐力降伏点 YS 0.2% KSI	引張強さ TS	伸び EL %	% 試3	BEND TEST 曲げ試験	LOCATION ORIENTATION 試1	SIZE 試2	衝撃試験 IMPACT TEST 2V-50F FT.LB 平均値 AVG	個々値 EACH	HBW	化学成分 CHEMICAL COMPOSITION % C ×100	Si ×100	Mn ×100	P ×1000	S ×1000	Cu ×100	Ni ×100	Cr ×100	Mo ×100	Nb ×100	V ×100	TAl ×100	Ceq.1 ×100	熱処理 HEAT TREATMENT CONDITION OF SUPPLY 試7
																		N ×4000	TE3 ×1000	TE1 ×100			CA ×10000	B ×10000	TI ×100	Pcm ×100	Sol. Al ×100	Ceq.2 ×100	
06			G8271	FROM											251	AVG	16	37	142	11	2	1	2	2	0	11	0	32	40	
0.750"X96.5"X480"	2	8934	04864	270020602 TO 270020603	TC	I	52	76	30			TL	F	222	184	152		33	2	5			17	0	0					
															230														
																P	16	38	142	10	2	1	2	2	0	12	0		40	
																		32		5			21	1	0				
06			G8271	TESTED-PL											265	AVG	16	37	142	11	2	1	2	2	0	11	0	32	40	
0.750"X96.5"X480"	1	4467	04867	270020610	TC	I	56	77	29			TL	F	266	280	154		33	2	5			17	0	0					
															253														
																P	16	38	142	10	2	1	2	2	0	12	0		40	
																		32		5			21	1	0				
06			G8271	FROM											265	AVG	16	37	142	11	2	1	2	2	0	11	0	32	40	
0.750"X96.5"X480"	2	8934	04867	270020611 TO 270020612	TC	I	56	77	29			TL	F	266	280	154		33	2	5			17	0	0					
															253														
																P	16	38	142	10	2	1	2	2	0	12	0		40	
																		32		5			21	1	0				

注釈 NOTES
※1 Location Orientation 位置・方向, T:頂部 Top, B:底部 Bottom, L:圧延方向 Longitudinal, C:直角方向 Transverse, Z:板厚方向 Through Thickness, R:45° 方向 45Deg. to the Longitudinal Axis
※2 GL 標点距離 Gage Length, A:50mm 平形試験片 Rectangular, B:50mm 丸形試験片 Round, C:70mm 平形試験片 Rectangular, D:70mm 丸形試験片 Round, E:80mm 平形試験片 Rectangular, F:80mm 丸形試験片 Round, G:200mm, H:2", I:8", J:5.65$\sqrt{So}$, K:4$\sqrt{So}$
※3 RA:絞り Reduction of Area, YR:降伏比 Yield Ratio, ※4 A:合格 Acceptable, ※5 F:標準寸法 FULL SIZE, 2:2.5mm, 3:3.3mm, 4:3.33mm, 5:5.0mm, 6:6.67mm, 7:7.5mm, 8:6.7mm, 9:製品板厚 PlateThickness, ※6 P:製品分析 Product Analysis,
※7 N:焼準 Normalized, Q:焼入れ Quenched, T:焼戻し Tempered, CR:Controlled Rolled, NIC:NIC Process/TMC Process, CLC:CLC Process/TMC Process, AR:As Rolled, TMR:TMR Process/TMC Process, NR:Normalizing Rolled
SH:延性破面率 Shear Fracture, CF:脆性破面率 Crystallinity Fracture, LE:横膨出 Lateral Expansion, AGS:オーステナイト粒度 Austenite Grain Size, FGS:フェライト粒度 Ferrite Grain Size, SR:Stress Relieved/Post Weld Heat Treatment
温度 Temperature °C °F

上記注文品は御指定の規格または仕様に従って製造され、その要求事項を満足していることを証明します。

WE HEREBY CERTIFY THAT THE MATERIAL DESCRIBED HEREIN HAS BEEN MADE IN ACCORDANCE WITH THE RULES OF THE CONTRACT.

T. Adachi
君津製鐵所 品質保証室長
HEAD OF DEPARTMENT
QUALITY ASSURANCE DEPT.
KIMITSU WORKS

AX4003102512

B

注文者 SHIPPER : HANWA CO., LTD.
注文者照合番号 REFERENCE No. : 228410-685211000
契約番号 CONTRACT No. : 3-811-H1-5-3-AT01
商品名 COMMODITY : HOT ROLLED STEEL PLATES
規格 SPECIFICATION : ASME SA-516 GRADE 70-E10-A11
文書番号 DOCUMENT No. :
需要家 CUSTOMER : EDMONTON EXCHANGER GROUP OF C-OMPANIES

新日鐵住金株式会社
NIPPON STEEL & SUMITOMO METAL CORPORATION

本社 HEAD OFFICE : 〒100-8071 東京都千代田区丸の内二丁目6番1号 2-6-1, MARUNOUCHI, CHIYODA-KU, TOKYO 100-8071, JAPAN
君津製鐵所 KIMITSU WORKS : 〒299-1141 千葉県君津市君津1番地 1, KIMITSU, KIMITSU-CITY, CHIBA-PREF, 299-1141 JAPAN

鋼材検査証明書
INSPECTION CERTIFICATE

(AS PER EN 10204 CERTIFICATE ON MATERIAL TESTS 3.1)

証明書番号 CERTIFICATE No. : P-22373 頁 PAGE : 32
発行年月日 DATE OF ISSUE : 2013-03-25
1001 2**DM***** *****CEW**
需要家管理番号 CUSTOMER'S CONTROL No. : E10911-J1010ER E3001A02Q0 E05

寸法 DIMENSION mm,':inch,':feet	員数 QUANTITY	質量 MASS KG	製鋼番号 CAST No. / 試験番号 TEST No.	製品番号 PLATE No.	LOCATION ORIENTATION GL	引張試験 TENSILE TEST 耐力降伏点 YS 0.2% KSI	引張強さ TS KSI	伸び EL %	%	DEND TEST 曲げ試験	LOCATION ORIENTATION	SIZE	衝撃試験 IMPACT TEST 2V-50F FT.LB 平均値 AVG	個々値 EACH	HBW	化学成分 CHEMICAL COMPOSITION % C ×100	Si ×100	Mn ×100	P ×1000	S ×1000	Cu ×100	Ni ×100	Cr ×100	Mo ×100	Nb ×100	V ×100	TAl ×100	Ceq.1 ×100	熱処理状態 CONDITION OF SUPPLY
06			G8271	TESTED-PL										265	AVG	16	37	142	11	2	1	2	2	0	11	0	32	40	
0.750"X96.5"X480"	1	4467	04868	270020604	TC	56	77	30		TL	F	249	223	153		33	2	5				17	0	0					
													258																
															P	16	38	142	10	2	1	2	2	0	12	0		40	
																	32		5			21	1	0					
06			G8271	FROM										265	AVG	16	37	142	11	2	1	2	2	0	11	0	32	40	
0.750"X96.5"X480"	2	8934	04868	270020605	TC	56	77	30		TL	F	249	223	153		33	2	5				17	0	0					
				TO 270020606									258																
															P	16	38	142	10	2	1	2	2	0	12	0		40	
																	32		5			21	1	0					
07			G8266	TESTED-PL										193	AVG	16	37	144	6	3	1	1	2	0	11	0	33	41	
0.750"X120.5"X480"	1	5579	04772	270020701	TC	55	77	29		TL	F	205	212	154		27	2	4				15	0	0					
													210																
															P	16	38	145	6	3	1	1	2	0	12	0		41	
																	28		4			20	0	0					

注釈 NOTES
※1 Location Orientation 位置・方向, T:頭部 Top, B:底部 Bottom, L:圧延方向 Longitudinal, C:直角方向 Transverse, Z:板厚方向 Through Thickness, R:45° 方向 45Deg. to the Longitudinal Axis
※2 GL 標点距離 Gage Length, A:50mm 平形試験片 Rectangular, B:50mm 丸形試験片 Round, C:70mm 平形試験片 Rectangular, D:70mm 丸形試験片 Round, E:80mm 平形試験片 Rectangular, F:80mm 丸形試験片 Round, G:200mm, H:2", I:8", J:5.65$\sqrt{So}$, K:4.$\sqrt{So}$
※3 RA:絞り Reduction of Area, YR:降伏比 Yield Ratio, ※4 A:合格 Acceptable, ※5 F:標準寸法 FULL SIZE, 2:2.5mm, 3:3.3mm, 4:3.33mm, 5:5.0mm, 6:6.67mm, 7:7.5mm, 8:6.7mm, 9:製品板厚 PlateThickness, ※6 P:製品分析 Product Analysis,
※7 N:焼準 Normalized, Q:焼入れ Quenched, T:焼戻し Tempered, CR:Controlled Rolled, NIC:NIC Process/TMC Process, CLC:CLC Process/TMC Process, AR:As Rolled, TMR:TMR Process/TMC Process, NR:Normalizing Rolled
SH:延性破面率 Shear Fracture, CF:脆性破面率 Crystallinity Fracture, LE:横膨出 Lateral Expansion, AGS:オーステナイト粒度 Austenite Grain Size, FGS:フェライト粒度 Ferrite Grain Size, SR:Stress Relieved/Post Weld Heat Treatment
温度 Temperature C:□□□°C F:□□□°F

上記注文品は御指定の規格または仕様に従って製造され、その要求事項を満足していることを証明します。

WE HEREBY CERTIFY THAT THE MATERIAL DESCRIBED HEREIN HAS BEEN MADE IN ACCORDANCE WITH THE RULES OF THE CONTRACT.

T. Adachi
君津製鐵所 品質保証室長
HEAD OF DEPARTMENT
QUALITY ASSURANCE DEPT.
KIMITSU WORKS

AY4003202512

B

新日鐵住金株式会社
NIPPON STEEL & SUMITOMO METAL CORPORATION

本　　社 : 〒100-8071　東京都千代田区丸の内二丁目6番1号
HEAD OFFICE : 2-6-1, MARUNOUCHI, CHIYODA-KU, TOKYO 100-8071, JAPAN
君津製鐵所 : 〒299-1141　千葉県君津市君津1番地
KIMITSU WORKS : 1, KIMITSU, KIMITSU-CITY, CHIBA-PREF. 299-1141 JAPAN

鋼材検査証明書
INSPECTION CERTIFICATE

(AS PER EN 10204 CERTIFICATE ON MATERIAL TESTS 3.1)

注文者 SHIPPER : HANWA CO., LTD.
注文者照合番号 REFERENCE No. : 228410-685211000
契約番号 CONTRACT No. : 3-811-H1-5-3-AT01
商品名 COMMODITY : HOT ROLLED STEEL PLATES
規格 SPECIFICATION : ASME SA-516 GRADE 70-E10-A11
文書番号 DOCUMENT No. :
需要家 CUSTOMER : EDMONTON EXCHANGER GROUP OF C-OMPANIES

証明書番号 CERTIFICATE No. : P-22373　　頁 PAGE : 50E
発行年月日 DATE OF ISSUE : 2013-03-25
1001　　2**DM*****
*****CEW**
需要家管理番号 CUSTOMER'S CONTROL No. : E10911-J1010ER　E3001A0200 E05

寸法 DIMENSION mm, ":inch, ':feet	員数 QUANTITY	質量 MASS KG	製鋼番号 CAST No. / 試験番号 TEST No.	製品番号 PLATE No.	引張試験 TENSILE TEST: LOCATION ORIENTATION	引張試験 TENSILE TEST: 降伏点または耐力 YS 0.2% KSI	引張試験 TENSILE TEST: 引張強さ TS KSI	引張試験 TENSILE TEST: 伸び EL %	引張試験 TENSILE TEST: %	衝撃試験 IMPACT TEST: LOCATION ORIENTATION	衝撃試験 IMPACT TEST: SIZE	衝撃試験 IMPACT TEST: 2V - 50F FT. LB 平均値 AVG	衝撃試験 IMPACT TEST: 個々値 EACH	HBW	化学成分 CHEMICAL COMPOSITION % C	Si	Mn	P	S	Cu	Ni	Cr	Mo	Nb	V	TAl	Ceq 1	% CONFIRMED QUANTITY
				HEAT TREATMENT.																						
				PLATE & TEST SPECIMEN NORMALIZING : 910CX 10MIN.																						
				CHARPY IMPACT TEST TEMPERATURE (SI) : - 46C																						
				LADLE CEQ1 = C+MN/6+(NI+CU)/15+(CR+MO+V)/5																						
				PRODUCT CEQ1 = C+MN/6+(NI+CU)/15+(CR+MO+V)/5																						
				LADLE TE1 = CU+NI+CR+MO																						
				LADLE TE3 = CR+MO																						
				PRODUCT TE1 = CU+NI+CR+MO																						
				CHEMICAL COMPOSITION % : 'N' X10000																						
				CHEMICAL COMPOSITION % : 'TE3' X100																						
				LADLE TREATMENT : VACUUM DEGASSED																						
				SULPHIDE SHAPE CONTROL																						

MTR APPROVED
EDMONTON EXCHANGER

注釈 NOTES
※1 Location Orientation 位置・方向, T:頂部 Top, B:底部 Bottom, L:圧延方向 Longitudinal, C:直角方向 Transverse, Z:板厚方向 Through Thickness, R:45° 方向 45Deg. to the Longitudinal Axis
※2 GL 標点距離 Gage Length, A:50mm 平形試験片 Rectangular, B:50mm 丸形試験片 Round, C:70mm 平形試験片 Rectangular, D:70mm 丸形試験片 Round, E:80mm 平形試験片 Rectangular, F:80mm 丸形試験片 Round, G:200mm, H:2", I:8", J:5.65$\sqrt{So}$, K:4$\sqrt{So}$
※3 RA :絞り Reduction of Area, YR:降伏比 Yield Ratio, ※4 A:合格 Acceptable, ※5 P:標準寸法 FULL SIZE, 2:2.5mm, 3:3.3mm, 4:3.33mm, 5:5.0mm, 6:6.67mm, 7:7.5mm, 8:6.7mm, 9:製品板厚 PlateThickness, ※6 P:製品分析 Product Analysis,
※7 N:焼準 Normalized, Q:焼入れ Quenched, T:焼戻し Tempered, CR:Controlled Rolled, NIC:NIC Process/TMC Process, CLC:CLC Process/TMC Process, AR:As Rolled, TMR:TMR Process/TMC Process, NR:Normalizing Rolled
SH:延性破面率 Shear Fracture, CF:脆性破面率 Crystallinity Fracture, LE:横張出 Lateral Expansion, AGS:オーステナイト粒度 Austenite Grain Size, FGS:フェライト粒度 Ferrite Grain Size, SR:Stress Relieved/Post Weld Heat Treatment
温度 Temperature °C °F

上記注文品は御指定の規格または仕様に従って製造され、その要求事項を満足していることを証明します。

WE HEREBY CERTIFY THAT THE MATERIAL DESCRIBED HEREIN HAS BEEN MADE IN ACCORDANCE WITH THE RULES OF THE CONTRACT.

T. Adachi
君津製鐵所　品質保証室長
HEAD OF DEPARTMENT
QUALITY ASSURANCE DEPT.
KIMITSU WORKS

AX4005002512

5Blue
Process Equipment Inc.

RECEIVING INSPECTION REPORT

DATE: SEP 1 2 2013 PURCHASE ORDER# 1108-20

CUSTOMER/OWNER_____

DESCRIPTION OF MATERIAL:	PLATE	TUBE /PIPE	BAR	FITTINGS	

		YES	NO
1	MATERIALS CORRECT TO PURCHASE ORDER:	✓	
2	MTR SUPPLIED WITH MATERIALS	✓	
3	MTR CHECKED AGAINST PACKING SLIP	✓	
4	MTR CORRECT FOR THIS MATERIAL	✓	
5	IS MATERIALS IN GOOD CONDITION (NO DAMAGE):	✓	
6	IS MATERIAL THE SAME SIZE AND SCHEDULE AS REQUIRED ON THE PURCHASE ORDER:	✓	
7	IS MATERIAL THE CORRECT GRADE AS REQUIRED ON THE PURCHASE ORDER	✓	
8	IS THE MATERIAL LEGIBLY MARKED FROM THE SUPPLIER? THIS MAY BE STAMPED or STENCILED (record Grade. Type, Heat # And any other relevant information)	✓	

5 Blue Process Equipment Inc. SEP 1 2 2013 Quality Department

NOTE: If any of these inspection steps cannot be completed the inspector shall notify the QS ASAP. The QS shall make out a NCR detailing the discrepancies and the material in question shall be quarantined until a satisfactory solution to the problem can be resolved. This may include rework or sending the material back to the supplier

Inspector :_____ Signature: _____ Date SEP 1 2 2013

ROSEMARY KUNTZ
SAFETY / MTR
(780) 955-2040E:226

METALFAR
PRODOTTI INDUSTRIALI S.P.A.
STAMPAGGIO A CALDO DI ACCIAI COMUNI - LEGATI E INOSSIDABILI

SEDE AMMINISTRATIVA E STABILIMENTO:
23851 COSANA BRIANZA (LC) - Italy
Via G. Parini, 28
Tel. +39 031.655441
Fax +39 031.655149
quality.mff@farmas.com

COMPANY WITH QUALITY SYSTEM
CERTIFIED BY DNV = ISO 9001 =

SALA PROVE E ANALISI MATERIALI / MATERIAL TEST DEPARTMENT

CERTIFICATO DI COLLAUDO SECONDO EN 10204 - 3.1 INSPECTION CERTIFICATE

Certif. N. 2568	Del/Dated 04.05.2013	Fattura / Invoice N. 1694	Del/Dated 30.04.2013
DDT / Del Note N. 1937	Del/Dated 30.04.2013	Ns.Ord. / Our ref. N.	Del/Dated

CCTF CORPORATION Division of CMDC	Dest.: MRC-MIDFIELD SUPPLY ULC
5407 - 53 Avenue, N.W.	502 - 25 AVENUE
T6B 3G2 EDMONTON, ALBERTA CA	T9E 0K6 NISKU, ALBERTA CA

COD. COL. / HEAT CODE	COLATA / HEAT	POS. / ITEM	VS.ORDINE / YOUR REFERENCE	Q.TA' / Q.TY	DESCRIZIONE / DESCRIPTION	DIM.IN ACC. A / DIM. ACCORDANCE TO	VISIVO E DIMENS. / VIS. & DIMENS.
	12/70354	113	4810280-00	10,00	BLIND 150 RF 1" LF2CL1	ASME/ANSI B16.5 -2009	SATISFACTORY

MATERIALE / MATERIAL	C%	Si%	Mn%	S%	P%	Cr%	Ni%	Mo%	Ti%	Cu%	V%	Nb%	N%	Al%	C.E.%	B %
ASTM A350 LF2 CL1/2 (LADLE)	0,185	0,210	1,020	0,010	0,011	0,080	0,060	0,010	0,021	0,160	0,003	0,002	0,000	0,027	0,388	0,000

PROVETTA / TEST SPECIMEN SEZ. mm2 / SECT. mm2	LUNG. mm / LENGHT mm	FORMA / SHAPE 1=○ 2=□	SNERVAMENTO / YIELD POINT N/mm2 >=0,2%	ROTTURA / TENSILE STRENGHT N/mm2 >=	ALLUNGAMENTO / ELONGATION %>=	CONTRAZIONE / REDUCTION OF AREA %>=	DUREZZA / HARDNESS HBW	RESILIENZA / IMPACT TEST - JOULE/cm2 TIPO / TYPE 10x10mm	°C	1	2	3	SNERVAMENTO / YIELD POINT N/mm2 >=1,0%	Ns.Rif. / OUR REF.
126,60	50,80	1	335,0	530,0	31,0	58,0	159,0 - 163,0	KV	-46	69	70	66	0,0	

MATERIALE IN ACCORDO A / MATERIAL IN ACC. TO
ASTM/ASME A 350/SA 350 M - 12 ASME CODE SECT. II, PART A, ED. 2010 ADD. 2011a
CSA Z245.12 GRADE 290 CAT.II SOUR SERVICE

TRATTAMENTO TERMICO / HEAT TREATMENT
NORMALIZED AT 930 C - COOLED IN STILL AIR

FORNO / FURNACE
ELECTRIC FURNACE

ORIGINE / ORIGIN OF STEEL
EUROPEAN UNION

COD. COL. / HEAT CODE	COLATA / HEAT	POS. / ITEM	VS.ORDINE / YOUR REFERENCE	Q.TA' / Q.TY	DESCRIZIONE / DESCRIPTION	DIM.IN ACC. A / DIM. ACCORDANCE TO	VISIVO E DIMENS. / VIS. & DIMENS.
	12/33132	115	4810280-00	18,00	W/N 300 RF 2" 160 LF2CL1	ASME/ANSI B16.5 -2009	SATISFACTORY

MATERIALE / MATERIAL	C%	Si%	Mn%	S%	P%	Cr%	Ni%	Mo%	Ti%	Cu%	V%	Nb%	N%	Al%	C.E.%	B %
ASTM A350 LF2 CL1/2 (LADLE)	0,200	0,240	0,970	0,007	0,011	0,110	0,050	0,010	0,016	0,150	0,001	0,001	0,000	0,026	0,399	0,000

PROVETTA / TEST SPECIMEN SEZ. mm2 / SECT. mm2	LUNG. mm / LENGHT mm	FORMA / SHAPE 1=○ 2=□	SNERVAMENTO / YIELD POINT N/mm2 >=0,2%	ROTTURA / TENSILE STRENGHT N/mm2 >=	ALLUNGAMENTO / ELONGATION %>=	CONTRAZIONE / REDUCTION OF AREA %>=	DUREZZA / HARDNESS HBW	RESILIENZA / IMPACT TEST - JOULE/cm2 TIPO / TYPE 10x10mm	°C	1	2	3	SNERVAMENTO / YIELD POINT N/mm2 >=1,0%	Ns.Rif. / OUR REF.
126,60	50,80	1	346,0	520,0	30,0	59,0	156,0 - 159,0	KV	-46	64	67	66	0,0	

MATERIALE IN ACCORDO A / MATERIAL IN ACC. TO
ASTM/ASME A 350/SA 350 M - 12 ASME CODE SECT. II, PART A, ED. 2010 ADD. 2011a
CSA Z245.12 GRADE 290 CAT.II SOUR SERVICE

TRATTAMENTO TERMICO / HEAT TREATMENT
NORMALIZED AT 930 C - COOLED IN STILL AIR

FORNO / FURNACE
ELECTRIC FURNACE

ORIGINE / ORIGIN OF STEEL
EUROPEAN UNION

5 Blue Process Equipment Inc.
SEP 12 2013
Quality Department

NOTE 100% MANUFACTURED IN ITALY
NOTES MANUFACTURING IN ACCORDANCE WITH ORDER AND SPECIFICATION
MATERIAL IN ACCORDANCE WITH NACE MR-0175/2009 ISO 15156-2009 - SOUR SERVICE
MATERIAL IN ACCORDANCE WITH NACE MR-0103/2012 - SOUR SERVICE

UFFICIO CONTROLLO QUALITA' / QUALITY CONTROL DEPARTEMENT	ENTE UFFICIALE DI COLLAUDO / INSPECTION AUTHORITY	MARCHIO PRODUZIONE / MANUFACTURER'S SYMBOL
S. Frigerio		MFF

MRC
Global Supplier of Choice®

PACKING LIST

2823173001

Sales Or[illegible]
Number 2823173001 Page 1
Printed 08/23/13 15:59

Deliver To:	From: 73-750	Customer Purchase Order
5 BLUE PROCESS EQUIPMENT INC 2303 - 8TH ST NISKU AB T9E 7Z3	NISKU DISTRIBUTION CENTRE 502 - 25 AVE NISKU AB T9E 0K6	P7603 5B1108-20 Customer Release/Requisition No. Ordered by: TROY FORESTER

Promised - 08/23/13 Salesman - AMBER BILLINGS Ship VIA - WILL CALL Terms - NET 30 DAYS
Shipped - 08/23/13 Phone - (780) 469-2779 Freight Terms - PREPAID & ALLOW A Customer Ship No. - 27679-0000

CUSTOMER TO PICK UP AT 4:15PM

CPO Line	Customer Part/Item ID	Quantity Ordered	Backorder	Shipped	U/M	Description	Line No.
	17C10834	1		1	EA	2 300# BLK CS W/N FLG RF S160 A350-LF2N IMP MFG NAME: MFF HEAT/LOT/SERIAL # 12/33132	001

5 Blue Process Equipment Inc.
SEP 12 2013
Quality Department

THIS IS NOT AN INVOICE. DO NOT PAY FROM THIS DOCUMENT.

RECEIVED BY - ----------

Tubes- Box/Bag- 1 Crates- Pallets- Pieces- Bundles- Picked by- JN Checked by- Staged-
Order Weight- 9.37 Material Tot- Freight- $ .00 Other- $ .00 Tax- $ .00 Total- $ .00

CMPACK (Rev 05/09)

5Blue
Process Equipment Inc.

RECEIVING INSPECTION REPORT

DATE: JUN 1 0 2013 PURCHASE ORDER# 1108-20

CUSTOMER/OWNER _____ STELL/SKIRT/RING/COUPON

DESCRIPTION OF MATERIAL:	PLATE	TUBE /PIPE	BAR	FITTINGS	

		YES	NO
1	MATERIALS CORRECT TO PURCHASE ORDER:	✓	
2	MTR SUPPLIED WITH MATERIALS	✓	
3	MTR CHECKED AGAINST PACKING SLIP	✓	
4	MTR CORRECT FOR THIS MATERIAL	✓	
5	IS MATERIALS IN GOOD CONDITION (NO DAMAGE):	✓	
6	IS MATERIAL THE SAME SIZE AND SCHEDULE AS REQUIRED ON THE PURCHASE ORDER:	✓	
7	IS MATERIAL THE CORRECT GRADE AS REQUIRED ON THE PURCHASE ORDER	✓	
8	IS THE MATERIAL LEGIBLY MARKED FROM THE SUPPLIER? THIS MAY BE STAMPED or STENCILED (record Grade. Type, Heat # And any other relevant information)	✓	

5 Blue Process Equipment Inc. JUN 1 0 2013 Quality Department

NOTE: If any of these inspection steps cannot be completed the inspector shall notify the QS ASAP. The QS shall make out a NCR detailing the discrepancies and the material in question shall be quarantined until a satisfactory solution to the problem can be resolved. This may include rework or sending the material back to the supplier

Inspector :_____ Signature: _____ Date JUN 1 0 2013

ROSEMARY KUNTZ
SAFETY / MTR
(780) 955-2040E:226

edmonton exchanger
& manufacturing ltd.

5545-89 Street Edmonton, Alberta Canada T6E 5W9 www.edmontonexchanger.com tel 780.468.6722 • fax 780.466.5155

Packing List

Bill To
5BLUE PROCESS EQUIPMENT INC.
2303-8 ST.
NISKU, AB T9E 7Z3
CANADA

Ship To
5BLUE PROCESS EQUIPMENT INC.
2303-8 ST.
NISKU, AB T9E 7Z3
CANADA

Order Date	Ordered By	Customer Order#	Ship Via	Freight	Order Taken By
2013/5/23	ROB	P6860-5B1108-20	DUNRITE	COLLECT	KO

Total Weight	Credit Terms	Packing List #	Packing Date
7,236#	NET 30 DAYS	145902	2013/6/6

Job#	Ord	Description	Weight/Lot	Backord	Ship
		UNLESS SPECIFIED OTHERWISE: SUPPLY MATERIAL, CUT, ROLL/FORM & WELD/TACKWELD WHERE APPLICABLE ALL WORK TO COMPLY WITH ASME SECTION VIII DIV. I AND ASME SECTION IX, INCLUDING WELD REPAIRS ALL MATERIAL TO COMPLY WITH ASME SECTION II COUNTRY OF ORIGIN RESTRICTIONS DO NOT APPLY			
147-3	1	SHELL(S) - 0.6250" NOM X 66" ID X 48" Material Grades: SA 516-70 N Ex Edm Exch Condition: N (Normalized) Charpy: Cond N, Longitudinal, -50 F, 15/12 FT.LB, Miscellaneous: Certification: NACE MR0175 / ISO 15156-2 2009 Annex A Other Testing/QC: Brinell Hardness: <=200HB UT: Grid 4", SA 435 Tag: 5B1108-20 (Grease) Bevel Details: -- Circ Seams -- 30 Deg O/S Bevel No Land -- Long Seam -- 30 Deg O/S Bevel No Land, Gap 1/8"	1,776#		1
S99147-4	1	SHELL(S) - 0.6250" NOM X 66" ID X 96" Material Grades: SA 516-70 N Ex Edm Exch Condition:	3,552#		1

5 Blue Process Equipment Inc. JUN 10 2013 Quality Department

Edmonton Exchanger Shipper Sign. _____

Date Shipped June 7/13

Drivers are responsible for ensuring that their vehicles are properly loaded and that their loads are safely secured in accordance with all transport regulations.

Carrier Signature _____

edmonton exchanger
& manufacturing ltd.

5545-89 Street Edmonton, Alberta Canada T6E 5W9 www.edmontonexchanger.com tel 780.468.6722 • fax 780.466.5155

Packing List

Bill To
5BLUE PROCESS EQUIPMENT INC.
2303-8 ST.
NISKU, AB T9E 7Z3
CANADA

Ship To
5BLUE PROCESS EQUIPMENT INC.
2303-8 ST.
NISKU, AB T9E 7Z3
CANADA

Order Date	Ordered By	Customer Order#	Ship Via	Freight	Order Taken By
2013/5/23	ROB	P6860-5B1108-20	DUNRITE	COLLECT	KO

Total Weight	Credit Terms	Packing List #	Packing Date
7,236#	NET 30 DAYS	145902	2013/6/6

Job#	Ord	Description	Weight/Lot	Backord	Ship
		N (Normalized) Charpy: Cond N, Longitudinal, -50 F, 15/12 FT.LB, Miscellaneous: Certification: NACE MR0175 / ISO 15156-2 2009 Annex A Other Testing/QC: Brinell Hardness: <=200HB UT: Grid 4", SA 435 Tag: 5B1108-20 (Grease) Bevel Details: -- Circ Seams -- 30 Deg O/S Bevel No Land -- Long Seam -- 30 Deg O/S Bevel No Land, Gap 1/8"			
S99147-5	1	SKIRT(S) - 0.3750" NOM X 66" ID X 30" Material Grades: SA 516-70 N Ex Edm Exch Condition: N (Normalized) Charpy: Cond N, Longitudinal, -50 F, 15/12 FT.LB, Miscellaneous: Certification: NACE MR0175 / ISO 15156-2 2009 Annex A Other Testing/QC: Brinell Hardness: <=200HB Tag: 5B1108-20 (Grease)	662#		1

5 Blue Process Equipment Inc. JUN 10 2013 Quality Department

Edmonton Exchanger Shipper Sign. _____

Date Shipped _____

Drivers are responsible for ensuring that their vehicles are properly loaded and that their loads are safely secured in accordance with all transport regulations.

Carrier Signature _____

edmonton exchanger
& manufacturing ltd.

5545-89 Street Edmonton, Alberta Canada T6E 5W9 www.edmontonexchanger.com tel 780.468.6722 • fax 780.466.5155

Packing List

Bill To
5BLUE PROCESS EQUIPMENT INC.
2303-8 ST.
NISKU, AB T9E 7Z3
CANADA

Ship To
5BLUE PROCESS EQUIPMENT INC.
2303-8 ST.
NISKU, AB T9E 7Z3
CANADA

Order Date	Ordered By	Customer Order#	Ship Via	Freight	Order Taken By
2013/5/23	ROB	P6860-5B1108-20	DUNRITE	COLLECT	KO

Total Weight	Credit Terms	Packing List #	Packing Date
7,236#	NET 30 DAYS	145902	2013/6/6

Job#	Ord	Description	Weight/Lot	Backord	Ship
		Bevel Details: -- Circ Seams -- Square Cut -- Long Seam -- 30 Deg O/S Bevel No Land, Gap 1/8"			
S99147-6	1	RING(S) - 1.0000" NOM X 74" OD X 62" ID Material Grades: SA 516-70 N Ex Edm Exch Condition: N (Normalized) Charpy: Cond N, Longitudinal, -50 F, 15/12 FT.LB, Miscellaneous: Certification: NACE MR0175 / ISO 15156-2 2009 Annex A Other Testing/QC: Brinell Hardness: <=200HB Tag: 5B1108-20 (Grease) Supply Inside Cutouts	1,221#		1
S99147-7	1	COUPON(S) - 0.6250" NOM X 24" X 6" Material Grades: SA 516-70 N Ex Edm Exch Condition: N (Normalized) Charpy: Cond N, Longitudinal, -50 F, 15/12 FT.LB, Tag: 5B1108-20 (Grease)	25#		1

5Blue Process Equipment Inc. JUN 10 2013 Quality Department

Edmonton Exchanger Shipper Sign. _____

Date Shipped _____

Drivers are responsible for ensuring that their vehicles are properly loaded and that their loads are safely secured in accordance with all transport regulations.

Carrier Signature _____

edmonton exchanger
& manufacturing ltd.

5545-89 Street Edmonton, Alberta Canada T6E 5W9 www.edmontonexchanger.com tel 780.468.6722 • fax 780.466.5155

Packing List

Bill To
5BLUE PROCESS EQUIPMENT INC.
2303-8 ST.
NISKU, AB T9E 7Z3
CANADA

Ship To
5BLUE PROCESS EQUIPMENT INC.
2303-8 ST.
NISKU, AB T9E 7Z3
CANADA

Order Date	Ordered By	Customer Order#	Ship Via	Freight	Order Taken By
2013/5/23	ROB	P6860-5B1108-20	DUNRITE	COLLECT	KO

Total Weight	Credit Terms	Packing List #	Packing Date
7,236#	NET 30 DAYS	145902	2013/6/6

Job#	Ord	Description	Weight/Lot	Backord	Ship
		Use same heat# as SHELL's in S99147-3 Stamp grain direction in the 0'-6" direction BEVEL ONE 24" SIDE - 30 DEG O/S BEVEL, NO LAND REMAINING THREE SIDES - SQUARE CUT			

Edmonton Exchanger Shipper Sign. _____

Date Shipped _____

Drivers are responsible for ensuring that their vehicles are properly loaded and that their loads are safely secured in accordance with all transport regulations.

Carrier Signature _____

edmonton exchanger
& manufacturing ltd.

5545-89 Street Edmonton, Alberta Canada T6E 5W9 www.edmontonexchanger.com tel 780.468.6722 • QC fax 780.466.4668 • sales fax 780.466.5155

CERTIFICATE OF COMPLIANCE

Customer 5BLUE PROCESS EQUIPMENT INC. PO P6860-5B1108-20 Work Order C99147 Date 2013/06/05 CofC# 41493

Item#	Description	Qty	Heat#	Weld Proc.	Form. Proc.
S99147-3-1	SHELL(S) - 0.6250" NOM X 66" ID X 48" (Material Spec: SA 516-70 Normalized) *Conforms to NACE MR0175 / ISO 15156-2 2009 Annex A*	1	G8266-270020510	WP600	4
S99147-4-1	SHELL(S) - 0.6250" NOM X 66" ID X 96" (Material Spec: SA 516-70 Normalized) *Conforms to NACE MR0175 / ISO 15156-2 2009 Annex A*	1	G8271-270020415	WP600	4
S99147-5-1	SKIRT(S) - 0.3750" NOM X 66" ID X 30" (Material Spec: SA 516-70 Normalized) *Conforms to NACE MR0175 / ISO 15156-2 2009 Annex A*	1	G1950-8747202361	WP600	4
S99147-7	COUPON(S) - 0.6250" NOM X 24" X 6" (Material Spec: SA 516-70 Normalized)	1	G8266-270020510	-	-

Forming Procedure:
4. Cold Formed

Brinell Equipment: Newage Calibrated Pin
Brinell Hardness Tester

Supplementary Requirements

STRONG BACKS USED FOR SUPPORT. TACK WELD PROCEDURE WP2 APPLIES.

Normalized Material Identification Marking:
'MT' indicates normalized by the mill per ASME Code Section II, Part A, SA 20, Paragraph 13.1.1.
'GMT' indicates normalized by Edmonton Exchanger per ASME Code Section II, Part A, SA 20, Paragraph 13.1.2.
'GT' indicates normalized by Edmonton Exchanger per ASME Code Section VIII Division 1, UG-85 or ASME Code Section I, PG-77.4.

The item(s) listed above comply with the requirements of ASME Code Section I, PG-80 and ASME Code Section VIII, Division 1, UCS-79(d), UG-79 & UG-80. All welders and procedures are qualified to ASME Code Section IX. For tacking carbon steel items, roundbar used is 1018 Cold Rolled. Material being supplied conforms to the latest ASME Code Section II, Part A, 2010 Edition, Addenda July 1, 2011.

5 Blue Process Equipment Inc.
JUN 10 2013
Quality Department

edmonton exchanger
& manufacturing ltd.

5545-89 Street Edmonton, Alberta Canada T6E 5W9 www.edmontonexchanger.com tel 780.468.6722 • QC fax 780.466.4668 • sales fax 780.466.5155

CERTIFICATE OF COMPLIANCE

Customer 5BLUE PROCESS EQUIPMENT INC. PO P6860-5B1108-20 Work Order C99147 Date 2013/06/05 CofC# 41493

Supplementary Examination - Items

Edmonton Exchanger

UT: SA 435

(for -3-1, -4-1)
Acceptable to ASME Code

EE Procedure:	**UIP-001 REV.10**
Equipment:	**Krautkramer USN-58L**
Serial No.:	**010X9H**
Transducer:	**Benchmark**
Calibration:	**Plate**
Grid:	**4 "**
Material:	**SA 516-70 N**
Examination Surface / Side:	**Tight Scale**
Trans Type:	**1", 2 1/4 MHz, 0 deg**
Primary Ref. Res. dB 100%:	**38**
Scanning Sens. dB:	**50**
Range Cal. In.:	**3**
Coaxial Cables`:	**BNC 8 ft long**
Search Unit Serial No.:	**00V5J3**
Couplant:	**Water**
Tech:	**Tracy Enman (#11226)**
CGSB / SNT:	**Level II**
Time:	**Day Shift**
Date:	**2013/05/31**

edmonton exchanger
& manufacturing ltd.
5545-89 Street Edmonton, Alberta Canada T6E 5W9 www.edmontonexchanger.com tel 780.468.6722 • QC fax 780.466.4668 • sales fax 780.466.5155

CERTIFICATE OF COMPLIANCE

MTR List

Customer 5BLUE PROCESS EQUIPMENT PO P6860-5B1108-20 Work Order C99147 Date 2013/06/05 CofC# 41493

Email to ango@5blue.com

Email to jdery-brochu@5blue.com

Email to kolsen@edmontonexchanger.com

MTR ID	Pages	Heat#	Thickness	Material Grades
16547	26	G1950-8747202361	.375"	SA 516-70 N
17695	5	G8271-270020415	.625"	SA 516-70 N
17696	8	G8266-270020510	.625"	SA 516-70 N

Heat#	Material Grades	MTR ID
G1950-8747202361	SA 516-70 N	16547
G8266-270020510	SA 516-70 N	17696
G8271-270020415	SA 516-70 N	17695

5 Blue Process Equipment Inc. JUN 10 2013 Quality Department

B

注文者 SHIPPER : HANWA CO., LTD.
注文者照合番号 REFERENCE No. : 228-68511040
契約番号 CONTRACT No. : 1-831-H1-5-X-AT01
商品名 COMMODITY : HOT ROLLED STEEL PLATES
規格 SPECIFICATION : ASME SA-516 GRADE 70-E10
文書番号 DOCUMENT No. :
需要家 CUSTOMER : EDMONTON EXCHANGER GROUP OF C-OMPANIES

**
新日本製鐵株式會社
Nippon Steel Corporation

鋼材検査証明書
INSPECTION CERTIFICATE

(AS PER EN 10204 CERTIFICATE ON MATERIAL TESTS 3.1)

本社 HEAD OFFICE : 〒100-8071 東京都千代田区丸の内二丁目6番1号 2-6-1, MARUNOUCHI, CHIYODA-KU, TOKYO 100-8071, JAPAN
君津製鐵所 KIMITSU WORKS : 〒299-1141 千葉県君津市君津1番地 1, KIMITSU, KIMITSU-CITY, CHIBA-PREF. 299-1141 JAPAN

証明書番号 CERTIFICATE No. : P-17645 PAGE : 10
発行年月日 DATE OF ISSUE : 2011-11-10
1001
需要家管理番号 CUSTOMER'S CONTROL No. : 2**DM*****
*****CEW**
E3001P07Q1 E07

寸法 DIMENSION mm,":inch,':feet	員数 QUANTITY	質量 MASS KG	製鋼番号 CAST No. / 試験番号 TEST No.	製品番号 PLATE No.	LOCATION ORIENTATION ※1	GL ※2	引張試験 TENSILE TEST 耐力降伏点 YS 0.2% KSI	引張強さ TS KSI	伸び EL %	% ※3	BEND TEST d=3T/4T	LOCATION ORIENTATION ※1	SIZE ※5	衝撃試験 IMPACT TEST 2V-50F FT.LB 平均値 AVG	個々値 EACH	HBW	化学成分 CHEMICAL COMPOSITION % C ×100	Si ×100	Mn ×100	P ×1000	S ×1000	Cu ×100	Ni ×100	Cr ×100	Mo ×100	Nb ×100	V ×100	TAl ×100	Ceq.1 ×100	供給状態 CONDITION OF SUPPLY ※7
														N ×1000	TE3 −1000	TE1 ×100	×100	SN +100	CA ×10000	B ×10000	TI ×100		Pcm ×100	Sol.Al ×100	Ceq.2 ×100	
02			G8924												214	AVG	16	37	144	6	2	1	2	2	0	12	0	34	41	
0.375"X120.5"X480"	1	2790	46557	874720280	TC	1	57	78	25			TL	7	201	177	156		34	2	5	0	0	9	0	0				
															211														
																	P	16	38	142	6	2	1	1	2	0	12	0		40	
																			37		4		0	11	1	0				
02			G1752	TESTED-PL											178	AVG	16	38	145	9	2	2	2	2	0	12	0	33	41	
0.375"X120.5"X480"	1	2790	59755	874720293	TC	1	57	77	24			TL	7	191	208	158		45	2	6	0	17	0	0					
															186														
																	P	16	38	146	10	2	2	2	2	0	14	0		41	
																			47		6		1	21	2	0				
02			G1752	FROM											178	AVG	16	38	145	9	2	2	2	2	0	12	0	33	41	
0.375"X120.5"X480"	3	8370	59755	874720294	TC	1	57	77	24			TL	7	191	208	158		45	2	6	0	17	0	0					
				TO											186														
				874720296													P	16	38	146	10	2	2	2	2	0	14	0		41	
																			47		6		1	21	2	0				

注釈 NOTES
※1 Location Orientation 位置・方向, T:頭部 Top, B:底部 Bottom, L:圧延方向 Longitudinal, C:直角方向 Transverse, Z:板厚方向 Through Thickness, R:45° 方向 45Deg. to the Longitudinal Axis
※2 GL 標点距離 Gage Length, A:50mm 平形試験片 Rectangular, B:50mm 丸形試験片 Round, C:70mm 平形試験片 Rectangular, D:70mm 丸形試験片 Round, E:80mm 平形試験片 Rectangular, F:80mm 丸形試験片 Round, G:200mm, H:2", I:8", J:5.65$\sqrt{So}$, K:4$\sqrt{So}$
※3 RA:絞り Reduction of Area, YR:降伏比 Yield Ratio, ※4 A:合格 Acceptable, ※5 F:標準寸法 FULL SIZE, 2:2.5mm, 3:3.3mm, 4:3.33mm, 5:5.0mm, 6:6.67mm, 7:7.5mm, 8:6.7mm, 9:製品板厚 PlateThickness, ※6 P:製品分析 Product Analysis,
※7 N:焼準 Normalized, Q:焼入れ Quenched, T:焼戻し Tempered, CR:Controlled Rolled, NIC:NIC Process/TMC Process, CLC:CLC Process/TMC Process, AR:As Rolled, TMR:TMR Process/TMC Process, NR:Normalizing Rolled
SH:延性破面率 Shear Fracture, CF:脆性破面率 Crystallinity Fracture, LE:横膨出 Lateral Expansion, AGS:オーステナイト粒度 Austenite Grain Size, FGS:フェライト粒度 Ferrite Grain Size, SR:Stress Relieved/Post Weld Heat Treatment
温度 Temperature C: F:

上記注文品は御指定の規格または仕様に従って製造され、その要求事項を満足していることを証明します。

WE HEREBY CERTIFY THAT THE MATERIAL DESCRIBED HEREIN HAS BEEN MADE IN ACCORDANCE WITH THE RULES OF THE CONTRACT.

16547

T. Adachi
君津製鐵所厚板管理グループリーダー
Head of Department
PLATE QUALITY CONTROL DEPT.
KIMITSU WORKS

AY4013763362

B

注文者 SHIPPER : HANWA CO., LTD.
注文者照合番号 REFERENCE No. : 228-68511040
契約番号 CONTRACT No. : 1-831-H1-5-X-AT01
商品名 COMMODITY : HOT ROLLED STEEL PLATES
規格 SPECIFICATION : ASME SA-516 GRADE 70-E10
文書番号 DOCUMENT No. :

**新日本製鐵株式會社
Nippon Steel Corporation**

鋼材検査証明書
INSPECTION CERTIFICATE

(AS PER EN 10204 CERTIFICATE ON MATERIAL TESTS 3.1)

需要家 CUSTOMER : EDMONTON EXCHANGER GROUP OF C-OMPANIES

本社 HEAD OFFICE : 〒100-8071 東京都千代田区丸の内二丁目6番1号 2-6-1, MARUNOUCHI, CHIYODA-KU, TOKYO 100-8071, JAPAN
君津製鐵所 KIMITSU WORKS : 〒299-1141 千葉県君津市君津1番地 1, KIMITSU, KIMITSU-CITY, CHIBA-PREF, 299-1141 JAPAN

証明書番号 CERTIFICATE No. : P-17645 PAGE : 11
発行年月日 DATE OF ISSUE : 2011-11-10
1001 2**DM*****
*****CEW**
需要家管理番号 CUSTOMER'S CONTROL No. : E3001P07Q1 E07

寸法 DIMENSION mm,':inch,':feet	員数 QUANTITY	質量 MASS KG	製鋼番号 CAST No. / 試験番号 TEST No.	製品番号 PLATE No.	LOCATION ORIENTATION ※1	GL ※2	引張試験 TENSILE TEST 耐力降伏点 YS 0.2% KSI	引張強さ TS KSI	伸び EL %	% ※3	BEND TEST 曲げ試験	LOCATION ORIENTATION ※1	SIZE	衝撃試験 IMPACT TEST 2V-50F FT.LB 平均値 AVG	個々値 EACH	HBW	化学成分 CHEMICAL COMPOSITION %	C ×100	Si ×100	Mn ×100	P ×1000	S ×1000	Cu ×100	Ni ×100	Cr ×100	Mo ×100	Nb ×100	V ×100	Ti ×100	Ceq.1 ×100	処理状態 CONDITION OF SUPPLY ※7
																			N	TE3	TE1		SN	CA	B	TI		Pcm	Sol.Al	Ceq.2	
																			×1000	×1000	×100	×100	×100	×10000	×10000	×100		×100	×100	×100	
02			G1752	TESTED-PL											205	AVG		16	38	145	9	2	2	2	2	0	12	0	33	41	
0.375"X120.5"X480"	1	2790	59756	8747202091	TC	I	59	78	28			TL	7	191	185	159			45	2	6		0	17	0	0					
															183																
																	P	16	38	146	10	2	2	2	2	0	14	0		41	
																			47		6		1	21	2	0					
02			G1752												205	AVG		16	38	145	9	2	2	2	2	0	12	0	33	41	
0.375"X120.5"X480"	1	2790	59756	8747202101	TC	I	59	78	28			TL	7	191	185	159			45	2	6		0	17	0	0					
															183																
																	P	16	38	146	10	2	2	2	2	0	14	0		41	
																			47		6		1	21	2	0					
02			G1752												205	AVG		16	38	145	9	2	2	2	2	0	12	0	33	41	
0.375"X120.5"X480"	1	2790	59756	8747202111	TC	I	59	78	28			TL	7	191	185	159			45	2	6		0	17	0	0					
															183																
																	P	16	38	146	10	2	2	2	2	0	14	0		41	
																			47		6		1	21	2	0					

注釈 NOTES ※1 Location Orientation 位置・方向, T:頂部 Top, B:底部 Bottom, L:圧延方向 Longitudinal, C:直角方向 Transverse, Z:板厚方向 Through Thickness, R:45° 方向 45Deg. to the Longitudinal Axis
※2 GL 標点距離 Gage Length, A:50mm 平形試験片 Rectangular, B:50mm 丸形試験片 Round, C:70mm 平形試験片 Rectangular, D:70mm 丸形試験片 Round, E:80mm 平形試験片 Rectangular, F:80mm 丸形試験片 Round, G:200mm, H:2", I:8", J:5.65$\sqrt{So}$, K:4$\sqrt{So}$
※3 RA:絞り Reduction of Area, YR:降伏比 Yield Ratio, ※4 A:合格 Acceptable, ※5 F:標準寸法 FULL SIZE, 2:2.5mm, 3:3.3mm, 4:3.33mm, 5:5.0mm, 6:6.67mm, 7:7.5mm, 8:6.7mm, 9:製品板厚 PlateThickness, ※6 P:製品分析 Product Analysis,
※7 N:焼準 Normalized, Q:焼入れ Quenched, T:焼戻し Tempered, CR:Controlled Rolled, NIC:NIC Process/TMC Process, CLC:CLC Process/TMC Process, AR:As Rolled, TMR:TMR Process/TMC Process, NR:Normalizing Rolled
SH:延性破面率 Shear Fracture, CF:脆性破面率 Crystallinity Fracture, LE:横膨出 Lateral Expansion, AGS:オーステナイト粒度 Austenite Grain Size, FGS:フェライト粒度 Ferrite Grain Size, SR:Stress Relieved/Post Weld Heat Treatment
温度 Temperature C: F:

上記注文品は御指定の規格または仕様に従って製造され、その要求事項を満足していることを証明します。

WE HEREBY CERTIFY THAT THE MATERIAL DESCRIBED HEREIN HAS BEEN MADE IN ACCORDANCE WITH THE RULES OF THE CONTRACT.

T. Adachi
君津製鐵所厚板管理グループリーダー
Head of Department
PLATE QUALITY CONTROL DEPT.
KIMITSU WORKS

AX4013609392

B

注文者 SHIPPER : HANWA CO., LTD.
注文者照合番号 REFERENCE No. : 228-68511040
契約番号 CONTRACT No. : 1-831-H1-5-X-AT01
商品名 COMMODITY : HOT ROLLED STEEL PLATES
規格 SPECIFICATION : ASME SA-516 GRADE 70-E10
文書番号 DOCUMENT No. :

新日本製鐵株式會社
Nippon Steel Corporation

鋼材検査証明書
INSPECTION CERTIFICATE

(AS PER EN 10204 CERTIFICATE ON MATERIAL TESTS 3.1)

需要家 CUSTOMER : EDMONTON EXCHANGER GROUP OF C-OMPANIES

本社 HEAD OFFICE : 〒100-8071 東京都千代田区丸の内二丁目6番1号 2-6-1, MARUNOUCHI, CHIYODA-KU, TOKYO 100-8071, JAPAN
君津製鐵所 KIMITSU WORKS : 〒299-1141 千葉県君津市君津1番地 1, KIMITSU, KIMITSU-CITY, CHIBA-PREF. 299-1141 JAPAN

証明書番号 CERTIFICATE No. : P-17645
頁 PAGE : 12
発行年月日 DATE OF ISSUE : 2011-11-10
1001
2**DM*****
*****CEW**
需要家管理番号 CUSTOMER'S CONTROL No. : E3001P07Q1 E07

寸法 DIMENSION mm,":inch,':feet	員数 QUANTITY	質量 MASS KG	製鋼番号 CAST No. / 試験番号 TEST No.	製品番号 PLATE No.	LOCATION ORIENTATION 注1	GL 注2	引張試験 TENSILE TEST 耐力降伏点 YS 0.2% KSI	引張強さ TS KSI	伸び EL %	% 注3	BEND TEST 曲げ試験 注4	LOCATION ORIENTATION 注1	SIZE 注5	衝撃試験 IMPACT TEST 2V-50F FT.LB 平均値 AVG	個々値 EACH	HBW	化学成分 CHEMICAL COMPOSITION % C ×100	Si ×100	Mn ×100	P ×1000	S ×1000	Cu ×100	Ni ×100	Cr ×100	Mo ×100	Nb ×100 ~1000	V ×100 ~1000	TAl ×100	Ceq.1 ×100	品質状態 CONDITION OF SUPPLY 注7
																		N ~1000	TE3 ~1000	TE1 ×100	×100	SN ~100	CA ×10000	B ×10000	TI ×100		Pcm ×100	Sol.Al ×100	Ceq.2 ×100	
02			G1752												205	AVG	16	38	145	9	2	2	2	2	0	12	0	33	41	
0.375"X120.5"X480"	1	2790	59756	8747202121	TC	I	59	78	28			TL	7	191	185	159		45	2	6		0	17	0	0					
															183														
																	P	16	38	146	10	2	2	2	2	0	14	0		41	
																			47		6		1	21	2	0					
02			G1752	TESTED-PL											181	AVG	16	38	145	9	2	2	2	2	0	12	0	33	41	
0.375"X120.5"X480"	1	2790	59757	874720297	TC	I	57	78	28			TL	7	190	207	160		45	2	6		0	17	0	0					
															183														
																	P	16	38	146	10	2	2	2	2	0	14	0		41	
																			47		6		1	21	2	0					
02			G1752												181	AVG	16	38	145	9	2	2	2	2	0	12	0	33	41	
0.375"X120.5"X480"	1	2790	59757	8747202001	TC	I	57	78	28			TL	7	190	207	160		45	2	6		0	17	0	0					
															183														
																	P	16	38	146	10	2	2	2	2	0	14	0		41	
																			47		6		1	21	2	0					

注釈 NOTES
注1 Location Orientation 位置・方向, T:頂部 Top, B:底部 Bottom, L:圧延方向 Longitudinal, C:直角方向 Transverse, Z:板厚方向 Through Thickness, R:45° 方向 45Deg. to the Longitudinal Axis
注2 GL 標点距離 Gage Length, A: 50mm 平形試験片 Rectangular, B: 50mm 丸形試験片 Round, C: 70mm 平形試験片 Rectangular, D: 70mm 丸形試験片 Round, E: 80mm 平形試験片 Rectangular, F: 80mm 丸形試験片 Round, G: 200mm, H: 2", I: 8", J: $5.65\sqrt{So}$, K: $4\sqrt{So}$
注3 RA: 絞り Reduction of Area, YR: 降伏比 Yield Ratio, 注4 A: 合格 Acceptable, 注5 F: 標準寸法 FULL SIZE, 2: 2.5mm, 3: 3.3mm, 4: 3.33mm, 5: 5.0mm, 6: 6.67mm, 7: 7.5mm, 8: 6.7mm, 9: 製品板厚 PlateThickness, 注6 P: 製品分析 Product Analysis,
注7 N: 焼準 Normalized, Q: 焼入れ Quenched, T: 焼戻し Tempered, CR: Controlled Rolled, NLC: NIC Process/TMC Process, CLC: CLC Process/TMC Process, AR: As-Rolled, TMR: TMR Process/TMC Process, NR: Normalizing Rolled
SH: 延性破面率 Shear Fracture, CF: 脆性破面率 Crystallinity Fracture, LE: 横膨出 Lateral Expansion, AGS: オーステナイト粒度 Austenite Grain Size, FGS: フェライト粒度 Ferrite Grain Size, SR: Stress Relieved/Post Weld Heat Treatment
温度 Temperature C: °C F: °F

上記注文品は御指定の規格または仕様に従って製造され、その要求事項を満足していることを証明します。

WE HEREBY CERTIFY THAT THE MATERIAL DESCRIBED HEREIN HAS BEEN MADE IN ACCORDANCE WITH THE RULES OF THE CONTRACT.

J. Adachi
君津製鐵所厚板管理グループリーダー
Head of Department
PLATE QUALITY CONTROL DEPT.
KIMITSU WORKS

AY4013905392

B

注文者 SHIPPER : HANWA CO., LTD.
注文者照合番号 REFERENCE No. : 228-68511040
契約番号 CONTRACT No. : 1-831-H1-5-X-AT01
商品名 COMMODITY : HOT ROLLED STEEL PLATES
規格 SPECIFICATION : ASME SA-516 GRADE 70-E10
文書番号 DOCUMENT No. :

**
新日本製鐵株式會社
Nippon Steel Corporation

鋼材検査証明書
INSPECTION CERTIFICATE

(AS PER EN 10204 CERTIFICATE ON MATERIAL TESTS 3.1)

需要家 CUSTOMER : EDMONTON EXCHANGER GROUP OF C-OMPANIES
需要家管理番号 CUSTOMER'S CONTROL No. :

本社 HEAD OFFICE : 〒100-8071 東京都千代田区丸の内二丁目6番1号 2-6-1, MARUNOUCHI, CHIYODA-KU, TOKYO 100-8071, JAPAN
君津製鐵所 KIMITSU WORKS : 〒299-1141 千葉県君津市君津1番地 1, KIMITSU, KIMITSU-CITY, CHIBA-PREF, 299-1141 JAPAN

証明書番号 CERTIFICATE No. : P-17645 頁 PAGE : 13
発行年月日 DATE OF ISSUE : 2011-11-10
1001 2**DM******
*****CEW**
E3001P07Q1 E07

寸法 DIMENSION mm,":inch,':feet	員数 QUANTITY	質量 MASS KG	製鋼番号 CAST No. / 試験番号 TEST No.	製品番号 PLATE No.	LOCATION ORIENTATION ※1	GL ※2	引張試験 TENSILE TEST 耐力降伏点 YS 0.2% KSI	引張強さ TS KSI	伸び EL %	% ※3	BEND TEST 合否 ※3	LOCATION ORIENTATION ※1	SIZE ※2	衝撃試験 IMPACT TEST 2V-50F FT.LB 平均値 AVG	個々値 EACH	HBW	化学成分 CHEMICAL COMPOSITION % C	Si	Mn	P	S	Cu	Ni	Cr	Mo	Nb	V	TAl	Ceq.1	品質状態 CONDITION OF SUPPLY
																		N	TE3	TE1		SN	CA	B	TI		Pcm	Sol.Al	Ceq.2	
02			G1752	TESTED-PL																									
0.375"X120.5"X480"	1	2790	59759	8747202131	TC	I	58	78	26			TL	7	206	220	AVG	16	38	145	9	2	2	2	2	0	12	0	33	41	
															199	158		45	2	6		0	17	0	0					
															199															
																	P	16	38	146	10	2	2	2	2	0	14	0		41	
																			47		6		1	21	2	0					
02			G1752												220	AVG	16	38	145	9	2	2	2	2	0	12	0	33	41	
0.375"X120.5"X480"	1	2790	59759	8747202141	TC	I	58	78	26			TL	7	206	199	158		45	2	6		0	17	0	0					
															199															
																	P	16	38	146	10	2	2	2	2	0	14	0		41	
																			47		6		1	21	2	0					
02			G1752												220	AVG	16	38	145	9	2	2	2	2	0	12	0	33	41	
0.375"X120.5"X480"	1	2790	59759	8747202151	TC	I	58	78	26			TL	7	206	199	158		45	2	6		0	17	0	0					
															199															
																	P	16	38	146	10	2	2	2	2	0	14	0		41	
																			47		6		1	21	2	0					

注釈 NOTES
※1 Location Orientation 位置・方向, T:頂部 Top, B:底部 Bottom, L:圧延方向 Longitudinal, C:直角方向 Transverse, Z:板厚方向 Through Thickness, R:45° 方向 45Deg. to the Longitudinal Axis
※2 GL 標点距離 Gage Length, A:50mm 平形試験片 Rectangular, B:50mm 丸形試験片 Round, C:70mm 平形試験片 Rectangular, D:70mm 丸形試験片 Round, E:80mm 平形試験片 Rectangular, F:80mm 丸形試験片 Round, G:200mm, H:2", I:8", J:5.65$\sqrt{So}$, K:4.$\sqrt{So}$
※3 RA:絞り Reduction of Area, YR:降伏比 Yield Ratio, ※4 A:合格 Acceptable, ※5 F:標準寸法 FULL SIZE, 2:2.5mm, 3:3.3mm, 4:3.33mm, 5:5.0mm, 6:6.67mm, 7:7.5mm, 8:6.7mm, 9:製品板厚 PlateThickness, ※6 P:製品分析 Product Analysis,
※7 N:焼準 Normalized, Q:焼入れ Quenched, T:焼戻し Tempered, CR:Controlled Rolled, NIC:NIC Process/TMC Process, CLC:CLC Process/TMC Process, AR:As-Rolled, TMR:TMR Process/TMC Process, NR:Normalizing Rolled
SH:延性破面率 Shear Fracture, CF:脆性破面率 Crystallinity Fracture, LE:横膨出 Lateral Expansion, AGS:オーステナイト粒度 Austenite Grain Size, FGS:フェライト粒度 Ferrite Grain Size, SR:Stress Relieved/Post Weld Heat Treatment
温度 Temperature C: F:

上記注文品は御指定の規格または仕様に従って製造され、その要求事項を満足していることを証明します。

WE HEREBY CERTIFY THAT THE MATERIAL DESCRIBED HEREIN HAS BEEN MADE IN ACCORDANCE WITH THE RULES OF THE CONTRACT.

T. Adachi
君津製鐵所厚板管理グループリーダー
Head of Department
PLATE QUALITY CONTROL DEPT.
KIMITSU WORKS

AX4014009392

B

注文者 SHIPPER : HANWA CO., LTD.
注文者照合番号 REFERENCE No. : 228-68511040
契約番号 CONTRACT No. : 1-831-H1-5-X-AT01
商品名 COMMODITY : HOT ROLLED STEEL PLATES
規格 SPECIFICATION : ASME SA-516 GRADE 70-E10
文書番号 DOCUMENT No. :

**新日本製鐵株式會社
Nippon Steel Corporation**

鋼材検査証明書
INSPECTION CERTIFICATE

(AS PER EN 10204 CERTIFICATE ON MATERIAL TESTS 3.1)

需要家 CUSTOMER : EDMONTON EXCHANGER GROUP OF COMPANIES
需要家管理番号 CUSTOMER'S CONTROL No. : 1001 2**DM***** *****CEW** E3001P07Q1 E07

本社 HEAD OFFICE : 〒100-8071 東京都千代田区丸の内二丁目6番1号 2-6-1, MARUNOUCHI, CHIYODA-KU, TOKYO 100-8071, JAPAN
君津製鐵所 KIMITSU WORKS : 〒299-1141 千葉県君津市君津1番地 1, KIMITSU, KIMITSU-CITY, CHIBA-PREF, 299-1141 JAPAN

証明書番号 CERTIFICATE No. : P-17645 頁 PAGE : 14
発行年月日 DATE OF ISSUE : 2011-11-10

寸法 DIMENSION mm, ": inch, ': feet	員数 QUANTITY	質量 MASS KG	製鋼番号 CAST No. / 試験番号 TEST No.	製品番号 PLATE No.	LOCATION ORIENTATION ※1	GL ※2	引張試験 TENSILE TEST 耐力降伏点 YS 0.2% KSI	引張強さ TS KSI	伸び EL %	% ※3	BEND TEST ※4	LOCATION ORIENTATION ※1	SIZE ※5	衝撃試験 IMPACT TEST 2V-50F FT.LB 平均値 AVG	個々値 EACH	HBW	化学成分 CHEMICAL COMPOSITION % C ×100	Si ×100	Mn ×100	P ×1000	S ×1000	Cu ×100	Ni ×100	Cr ×100	Mo ×100	Nb ×100 ×1000	V ×100 ×1000	Ti ×100	Ceq.1 ×100	N ×1000	TE3 ×1000	TE1 ×100	SN ×100	CA ×10000	B ×10000	Ti ×100	Pcm ×100	Sol.Al ×100	Ceq.2 ×100	熱処理 CONDITION OF SUPPLY ※7
02			G1752																																			
0.375"X120.5"X480"	1	2790	59759	874720216	TC	I	58	78	26			TL	7	206	220	AVG	16	38	145	9	2	2	2	2	0	12	0	33	41										
															199	158		45	2	6		0	17	0	0													
															199																								
																P	16	38	146	10	2	2	2	2	0	14	0		41										
																		47		6		1	21	2	0													
02			G1752	TESTED-PL											204																								
0.375"X120.5"X480"	1	2790	59760	874720281	TC	I	58	77	26			TL	7	206	210	AVG	16	38	145	9	2	2	2	2	0	12	0	33	41										
															205	159		45	2	6		0	17	0	0													
																P	16	38	146	10	2	2	2	2	0	14	0		41										
																		47		6		1	21	2	0													
02			G1752	FROM											204																								
0.375"X120.5"X480"	3	8370	59760	874720282	TC	I	58	77	26			TL	7	206	210	AVG	16	38	145	9	2	2	2	2	0	12	0	33	41										
				TO											205	159		45	2	6		0	17	0	0													
				874720284																																			
																P	16	38	146	10	2	2	2	2	0	14	0		41										
																		47		6		1	21	2	0													

注釈 NOTES
※1 Location Orientation 位置・方向, T:頂部 Top, B:底部 Bottom, L:圧延方向 Longitudinal, C:直角方向 Transverse, Z:板厚方向 Through Thickness, R:45° 方向 45Deg. to the Longitudinal Axis
※2 GL 標点距離 Gage Length, A:50mm 平形試験片 Rectangular, B:50mm 丸形試験片 Round, C:70mm 平形試験片 Rectangular, D:70mm 丸形試験片 Round; E:80mm 平形試験片 Rectangular, F:80mm 丸形試験片 Round, G:200mm, H:2", I:8", J:5.65$\sqrt{So}$, K:4.$\sqrt{So}$
※3 RA:絞り Reduction of Area, YR:降伏比 Yield Ratio, ※4 A:合格 Acceptable, ※5 F:標準寸法 FULL SIZE, 2:2.5mm, 3:3.3mm, 4:3.33mm, 5:5.0mm, 6:6.67mm, 7:7.5mm, 8:6.7mm, 9:製品板厚 PlateThickness, ※6 P:製品分析 Product Analysis,
※7 N:焼準 Normalized, Q:焼入れ Quenched, T:焼戻し Tempered, CR:ControlledRolled, NIC:NIC Process/TMC Process, CLC:CLC Process/TMC Process, AR:As Rolled, TMR:TMR Process/TMC Process, NR:Normalizing Rolled
SH:延性破面率 Shear Fracture, CF:脆性破面率 Crystallinity Fracture, LE:横膨出 Lateral Expansion, AGS:オーステナイト粒度 Austenite Grain Size, FGS:フェライト粒度 Ferrite Grain Size, SR:Stress Relieved/Post Weld Heat Treatment
温度 Temperature C: F:

上記注文品は御指定の規格または仕様に従って製造され、その要求事項を満足していることを証明します。

WE HEREBY CERTIFY THAT THE MATERIAL DESCRIBED HEREIN HAS BEEN MADE IN ACCORDANCE WITH THE RULES OF THE CONTRACT.

J. Adachi

君津製鐵所厚板管理グループリーダー
Head of Department
PLATE QUALITY CONTROL DEPT.
KIMITSU WORKS

AX401410939Z

B

新日本製鐵株式會社
Nippon Steel Corporation

鋼材検査証明書
INSPECTION CERTIFICATE

本社 HEAD OFFICE : 〒100-8071 東京都千代田区丸の内二丁目6番1号 2-6-1, MARUNOUCHI, CHIYODA-KU, TOKYO 100-8071, JAPAN
君津製鐵所 KIMITSU WORKS : 〒299-1141 千葉県君津市君津 1 番地 1, KIMITSU, KIMITSU-CITY, CHIBA-PREF, 299-1141 JAPAN

注文者 SHIPPER : HANWA CO., LTD.
注文者照合番号 REFERENCE No. : 228-68511040
契約番号 CONTRACT No. : 1-831-H1-5-X-AT01
商品名 COMMODITY : HOT ROLLED STEEL PLATES
規格 SPECIFICATION : ASME SA-516 GRADE 70-E10 (AS PER EN 10204 CERTIFICATE ON MATERIAL TESTS 3.1)
文書番号 DOCUMENT No. :
需要家 CUSTOMER : EDMONTON EXCHANGER GROUP OF C-OMPANIES
需要家管理番号 CUSTOMER'S CONTROL No. : E3001P07Q1 E07

証明書番号 CERTIFICATE No. : P-17645
頁 PAGE : 15
発行年月日 DATE OF ISSUE : 2011-11-10
1001 2**DM***** *****CEW**

寸法 DIMENSION mm,":inch,':feet	員数 QUANTITY	質量 MASS KG	製鋼番号 CAST No. / 試験番号 TEST No.	製品番号 PLATE No.	LOCATION ORIENTATION GL ※1	引張試験 TENSILE TEST 耐力降伏点 YS 0.2% KSI	引張強さ TS KSI	伸び EL % ※2	% ※3	BEND TEST 合否	LOCATION ORIENTATION ※1	SIZE	衝撃試験 IMPACT TEST 2V-50F FT.LB 平均値 AVG	個々値 EACH	HBW	化学成分 CHEMICAL COMPOSITION % C ×100	Si ×100	Mn ×100	P ×1000	S ×1000	Cu ×100	Ni ×100	Cr ×100	Mo ×100	Nb ×100 <1000	V ×100 <1000	TAl ×100	Ceq.1 ×100	CONDITION OF SUPPLY ※7
02			G1752	TESTED-PL										197													
0.375"X120.5"X480"	1	2790	59766	8747202011	TC	58	78	27			TL	7196	204	159		16	38	145	9	2	2	2	2	0	12	0	33	41	
													188				45	2	6		0	17	0	0					
															P	16	38	146	10	2	2	2	2	0	14	0		41	
																	47		6		1	21	2	0					
02			G1752											197													
0.375"X120.5"X480"	1	2790	59766	8747202021	TC	58	78	27			TL	7196	204	159		16	38	145	9	2	2	2	2	0	12	0	33	41	
													188				45	2	6		0	17	0	0					
															P	16	38	146	10	2	2	2	2	0	14	0		41	
																	47		6		1	21	2	0					
02			G1752											197													
0.375"X120.5"X480"	1	2790	59766	8747202031	TC	58	78	27			TL	7196	204	159		16	38	145	9	2	2	2	2	0	12	0	33	41	
													188				45	2	6		0	17	0	0					
															P	16	38	146	10	2	2	2	2	0	14	0		41	
																	47		6		1	21	2	0					

	Pcm ×100	Sol.Al ×100	Ceq.2 ×100

注釈 NOTES ※1 Location Orientation 位置・方向, T:頂部 Top, B:底部 Bottom, L:圧延方向 Longitudinal, C:直角方向 Transverse, Z:板厚方向 Through Thickness, R:45° 方向 45Deg. to the Longitudinal Axis
※2 GL 標点距離 Gage Length, A:50mm 平形試験片 Rectangular, B:50mm 丸形試験片 Round, C:70mm 平形試験片 Rectangular, D:70mm 丸形試験片 Round, E:80mm 平形試験片 Rectangular, F:80mm 丸形試験片 Round, G:200mm, H:2", I:8", J:$5.65\sqrt{So}$, K:$4\sqrt{So}$
※3 RA:絞り Reduction of Area, YR:降伏比 Yield Ratio, ※4 A:合格 Acceptable, ※5 F:標準寸法 FULL SIZE, 2:2.5mm, 3:3.3mm, 4:3.33mm, 5:5.0mm, 6:6.67mm, 7:7.5mm, 8:6.7mm, 9:製品板厚 PlateThickness, ※6 P:製品分析 Product Analysis,
※7 N:焼準 Normalized, Q:焼入れ Quenched, T:焼戻し Tempered, CR:Controlled Rolled, NIC:NIC Process/TMC Process, CLC:CLC Process/TMC Process, AR:As Rolled, TMR:TMR Process/TMC Process, NR:Normalizing Rolled
SH:延性破面率 Shear Fracture, CF:脆性破面率 Crystallinity Fracture, LE:横膨出 Lateral Expansion, AGS:オーステナイト粒度 Austenite Grain Size, FGS:フェライト粒度 Ferrite Grain Size, SR:Stress Relieved/Post Weld Heat Treatment
温度 Temperature C: F:

上記注文品は御指定の規格または仕様に従って製造され、その要求事項を満足していることを証明します。

WE HEREBY CERTIFY THAT THE MATERIAL DESCRIBED HEREIN HAS BEEN MADE IN ACCORDANCE WITH THE RULES OF THE CONTRACT.

J. Adachi
君津製鐵所厚板管理グループリーダー
Head of Department
PLATE QUALITY CONTROL DEPT.
KIMITSU WORKS

AX4014209392

B

注文者 SHIPPER : HANWA CO., LTD.
注文者照合番号 REFERENCE No. : 228-68511040
契約番号 CONTRACT No. : 1-831-H1-5-X-AT01
商品名 COMMODITY : HOT ROLLED STEEL PLATES
規格 SPECIFICATION : ASME SA-516 GRADE 70-E10
文書番号 DOCUMENT No. :

**新日本製鐵株式會社
Nippon Steel Corporation

鋼材検査証明書
INSPECTION CERTIFICATE

(AS PER EN 10204 CERTIFICATE ON MATERIAL TESTS 3.1)

需要家 CUSTOMER : EDMONTON EXCHANGER GROUP OF COMPANIES
需要家管理番号 CUSTOMER'S CONTROL No. :

本社 HEAD OFFICE : 〒100-8071 東京都千代田区丸の内二丁目6番1号 2-6-1, MARUNOUCHI, CHIYODA-KU, TOKYO 100-8071, JAPAN
君津製鐵所 KIMITSU WORKS : 〒299-1141 千葉県君津市君津1番地 1, KIMITSU, KIMITSU-CITY, CHIBA-PREF. 299-1141 JAPAN

証明書番号 CERTIFICATE No. : P-17645 頁 PAGE : 16
発行年月日 DATE OF ISSUE : 2011-11-10
1001 2**DM*****
*****CEW**
E3001P07Q1 E07

寸法 DIMENSION mm,″:inch,′:feet	員数 QUANTITY	質量 MASS KG	製鋼番号 CAST No. / 試験番号 TEST No.	製品番号 PLATE No.	LOCATION ORIENTATION ※1	GL ※2	引張試験 TENSILE TEST 耐力降伏点 YS 0.2% KSI	引張強さ TS KSI	伸び EL %	% ※3	BEND TEST ※4	LOCATION ORIENTATION ※1	SIZE ※2	衝撃試験 IMPACT TEST 2V-50F FT.LB 平均値 AVG	個々値 EACH	HBW	CONDITION OF SUPPLY ※7	化学成分 CHEMICAL COMPOSITION % C ×100	Si ×100	Mn ×100	P ×1000	S ×1000	Cu ×100	Ni ×100	Cr ×100	Mo ×100	Nb ×100	V ×100	TAl ×100	Ceq.1 ×100	N ×1000	TE3 ×1000	TE1 ×100	SN ×100	CA ×10000	B ×10000	TI ×100	Pcm ×100	Sol.Al ×100	Ceq.2 ×100
02			G1752												197			16	38	145	9	2	2	2	2	0	12	0	33	41								
0.375″X120.5″X480″	1	2790	59766	8747202041	TC	I	58	78	27			TL	7	196	204	AVG 159			45	2	6	0	17	0	0													
															188																						
																	P	16	38	146	10	2	2	2	2	0	14	0		41								
																			47		6		1	21	2	0											
02			G1752	TESTED-PL											218			16	38	145	9	2	2	2	2	0	12	0	33	41								
0.375″X120.5″X480″	1	2790	59767	874720285	TC	I	58	78	25			TL	7	206	200	AVG 159			45	2	6	0	17	0	0													
															199																						
																	P	16	38	146	10	2	2	2	2	0	14	0		41								
																			47		6		1	21	2	0											
02			G1752	FROM											218			16	38	145	9	2	2	2	2	0	12	0	33	41								
0.375″X120.5″X480″	3	8370	59767	874720286	TC	I	58	78	25			TL	7	206	200	AVG 159			45	2	6	0	17	0	0													
				TO											199																						
				874720288													P	16	38	146	10	2	2	2	2	0	14	0		41								
																			47		6		1	21	2	0											

注釈 NOTES
※1 Location Orientation 位置・方向, T:頂部 Top, B:底部 Bottom, L:圧延方向 Longitudinal, C:直角方向 Transverse, Z:板厚方向 Through Thickness, R:45° 方向 45Deg. to the Longitudinal Axis
※2 GL 標点距離 Gage Length, A: 50mm 平形試験片 Rectangular, B: 50mm 丸形試験片 Round, C: 70mm 平形試験片 Rectangular, D: 70mm 丸形試験片 Round, E: 80mm 平形試験片 Rectangular, F: 80mm 丸形試験片 Round, G: 200mm, H: 2", I: 8", J: 5.65$\sqrt{So}$, K: 4.$\sqrt{So}$
※3 RA: 絞り Reduction of Area, YR: 降伏比 Yield Ratio, ※4 A:合格 Acceptable, ※5 F:標準寸法 FULL SIZE, 2: 2.5mm, 3: 3.3mm, 4: 3.33mm, 5: 5.0mm, 6: 6.67mm, 7: 7.5mm, 8: 6.7mm, 9: 製品板厚 PlateThickness, ※6 P:製品分析 Product Analysis,
※7 N:焼準 Normalized, Q:焼入れ Quenched, T:焼戻し Tempered, CR: Controlled Rolled, NIC: NIC Process/TMC Process, CLC: CLC Process/TMC Process, AR: As Rolled; TMR: TMR Process/TMC Process, NR: Normalizing Rolled
SH:延性破面率 Shear Fracture, CF:脆性破面率 Crystallinity Fracture, LE:横膨出 Lateral Expansion, AGS:オーステナイト粒度 Austenite Grain Size, FGS:フェライト粒度 Ferrite Grain Size, SR: Stress Relieved/Post Weld Heat Treatment
温度 Temperature C: °C F: °F

上記注文品は御指定の規格または仕様に従って製造され、その要求事項を満足していることを証明します。

WE HEREBY CERTIFY THAT THE MATERIAL DESCRIBED HEREIN HAS BEEN MADE IN ACCORDANCE WITH THE RULES OF THE CONTRACT.

T. Adachi
君津製鐵所厚板管理グループリーダー
Head of Department
PLATE QUALITY CONTROL DEPT.
KIMITSU WORKS

AX401430392

B

注文者 SHIPPER : HANWA CO., LTD.

注文者照合番号 REFERENCE No. : 228-68511040

契約番号 CONTRACT No. : 1-831-H1-5-X-AT01

商品名 COMMODITY : HOT ROLLED STEEL PLATES

規格 SPECIFICATION : ASME SA-516 GRADE 70-E10

文書番号 DOCUMENT No. :

需要家 CUSTOMER : EDMONTON EXCHANGER GROUP OF C-OMPANIES

新日本製鐵株式會社
Nippon Steel Corporation

鋼材検査証明書
INSPECTION CERTIFICATE

(AS PER EN 10204 CERTIFICATE ON MATERIAL TESTS 3.1)

需要家管理番号 CUSTOMER'S CONTROL No. : 1001 2**DM*****
*****CEW**
E3001P07Q1 E07

本社 HEAD OFFICE : 〒100-8071 東京都千代田区丸の内二丁目6番1号
2-6-1, MARUNOUCHI, CHIYODA-KU, TOKYO 100-8071, JAPAN
君津製鐵所 KIMITSU WORKS : 〒299-1141 千葉県君津市君津1番地
1, KIMITSU, KIMITSU-CITY, CHIBA-PREF. 299-1141 JAPAN

証明書番号 CERTIFICATE No. : P-17645

発行年月日 DATE OF ISSUE : 2011-11-10

寸法 DIMENSION mm,':inch,':feet	員数 QUANTITY	質量 MASS KG	製鋼番号 CAST No. / 試験番号 TEST No.	製品番号 PLATE No.	引張試験 TENSILE TEST: 採取位置 LOCATION ORIENTATION GL ※1 ※2	耐力降伏点 YS 0.2% KSI	引張強さ TS KSI	伸び EL %	伸び % ※3	曲げ試験 BEND TEST 合否	衝撃試験 IMPACT TEST: 採取位置 LOCATION ORIENTATION ※1	試験片寸法 SIZE ※5	2V-50F FT.LB 平均値 AVG	2V-50F FT.LB 個々値 EACH	HBW	化学成分 CHEMICAL COMPOSITION %: C ×100 −1000	Si ×100	Mn ×100	P ×1000	S ×1000	Cu ×100	Ni ×100	Cr ×100	Mo ×100	Nb ×100 −1000	V ×100 −1000	Ti ×100	Ceq.1 ×100	熱処理条件 CONDITION OF SUPPLY ※7
																N −1000	TE3 −1000	TE1 ×100	×100	×100	SN −100	CA ×10000	B ×10000	Ti ×100		Pcm ×100	Sol.Al ×100	Ceq.2 ×100	
02			G1752	TESTED-PL																								
0.375"X120.5"X480"	1	2790	59768	8747202051	TC	57	78	25			TL	7	204	204	AVG	16	38	145	9	2	2	2	2	0	12	0	33	41	
														189	158		45	2	6		0	17	0	0					
														220															
															P	16	38	146	10	2	2	2	2	0	14	0		41	
																	47		6		1	21	2	0					
02			G1752																									
0.375"X120.5"X480"	1	2790	59768	8747202061	TC	57	78	25			TL	7	204	204	AVG	16	38	145	9	2	2	2	2	0	12	0	33	41	
														189	158		45	2	6		0	17	0	0					
														220															
															P	16	38	146	10	2	2	2	2	0	14	0		41	
																	47		6		1	21	2	0					
02			G1752																									
0.375"X120.5"X480"	1	2790	59768	8747202071	TC	57	78	25			TL	7	204	204	AVG	16	38	145	9	2	2	2	2	0	12	0	33	41	
														189	158		45	2	6		0	17	0	0					
														220															
															P	16	38	146	10	2	2	2	2	0	14	0		41	
																	47		6		1	21	2	0					

注釈 NOTES

※1 Location Orientation 位置・方向, T:頂部 Top, B:底部 Bottom, L:圧延方向 Longitudinal, C:直角方向 Transverse, Z:板厚方向 Through Thickness, R:45° 方向 45Deg. to the Longitudinal Axis

※2 GL 標点距離 Gage Length, A: 50mm 平形試験片 Rectangular, B: 50mm 丸形試験片 Round, C: 70mm平形試験片 Rectangular, D: 70mm丸形試験片 Round, E: 80mm平形試験片 Rectangular, F: 80mm丸形試験片 Round, G: 200mm, H: 2", I: 8", J: $5.65\sqrt{So}$, K: $4\sqrt{So}$

※3 RA: 絞り Reduction of Area, YR:降伏比 Yield:Ratio, ※4 A:合格 Acceptable, ※5 F:標準寸法 FULL SIZE, 2: 2.5mm, 3: 3.3mm, 4: 3.33mm, 5: 5.0mm, 6: 6.67mm, 7: 7.5mm, 8: 6.7mm, 9: 製品板厚 PlateThickness, ※6 P:製品分析 Product Analysis,

※7 N:焼準 Normalized, Q:焼入れ Quenched, T:焼戻し Tempered, CR: Controlled Rolled, NIC: NIC Process/TMC Process, CLC: CLC Process/TMC Process, AR: As-Rolled, TMR:TMR Process/TMC Process, NR: Normalizing Rolled

SH:延性破面率 Shear Fracture, CF:脆性破面率 Crystallinity Fracture, LE:横膨出 Lateral Expansion, AGS:オーステナイト粒度 Austenite Grain Size, FGS:フェライト粒度 Ferrite Grain Size, SR: Stress Relieved/Post Weld Heat Treatment

温度 Temperature C: °C F: °F

上記注文品は御指定の規格または仕様に従って製造され、その要求事項を満足していることを証明します。

WE HEREBY CERTIFY THAT THE MATERIAL DESCRIBED HEREIN HAS BEEN MADE IN ACCORDANCE WITH THE RULES OF THE CONTRACT.

J. Adachi

君津製鐵所厚板管理グループリーダー
Head of Department
PLATE QUALITY CONTROL DEPT.
KIMITSU WORKS

AY401440392

B

**新日本製鐵株式會社
Nippon Steel Corporation

鋼材検査証明書
INSPECTION CERTIFICATE

本社 HEAD OFFICE : 〒100-8071 東京都千代田区丸の内二丁目6番1号 2-6-1, MARUNOUCHI, CHIYODA-KU, TOKYO 100-8071, JAPAN
君津製鐵所 KIMITSU WORKS : 〒299-1141 千葉県君津市君津1番地 1, KIMITSU, KIMITSU-CITY, CHIBA-PREF. 299-1141 JAPAN

注文者 SHIPPER : HANWA CO., LTD.
注文者照合番号 REFERENCE No. : 228-68511040
契約番号 CONTRACT No. : 1-831-H1-5-X-AT01
商品名 COMMODITY : HOT ROLLED STEEL PLATES
規格 SPECIFICATION : ASME SA-516 GRADE 70-E10 (AS PER EN 10204 CERTIFICATE ON MATERIAL TESTS 3.1)
文書番号 DOCUMENT No. :
需要家 CUSTOMER : EDMONTON EXCHANGER GROUP OF C-OMPANIES
需要家管理番号 CUSTOMER'S CONTROL No. :

証明書番号 CERTIFICATE No. : P-17645 頁 PAGE 18
発行年月日 DATE OF ISSUE : 2011-11-10
1001 2**DM*****
*****CEW**
E3001P07Q1 E07

寸法 DIMENSION mm,':inch,':feet	員数 QUANTITY	質量 MASS KG	製鋼番号 CAST No. / 試験番号 TEST No.	製品番号 PLATE No.	LOCATION ORIENTATION ※1	GL ※2	引張試験 TENSILE TEST 耐力降伏点 YS 0.2% KSI	引張強さ TS KSI	伸び EL %	% ※3	BEND TEST 曲げ試験	LOCATION ORIENTATION ※1	衝撃試験 IMPACT TEST 2V-50F FT.LB 平均値 AVG	個々値 EACH	HBW	化学成分 CHEMICAL COMPOSITION % C ×100	Si ×100	Mn ×100	P ×1000	S ×1000	Cu ×100	Ni ×100	Cr ×100	Mo ×100	Nb ×100	V ×100	Ti ×100	Ceq.1 ×100	熱処理 CONDITION OF SUPPLY ※7
																	N ×1000	TE3	TE1		SN	CA ×10000	B ×10000	Ti ×100		Pcm ×100	Sol.Al ×100	Ceq.2 ×100	
02			G1752											204	AVG	16	38	145	9	2	2	2	2	0	12	0	33	41	
0.375'X120.5'X480'	1	2790	59768	8747202081	TC	1	57	78	25			TL	7 204	189	158		45	2	6		0	17	0	0					
														220															
																P	16	38	146	10	2	2	2	2	0	14	0	41	
																		47		6		1	21	2	0				
02			G1752	TESTED-PL										208	AVG	16	38	145	9	2	2	2	2	0	12	0	33	41	
0.375'X120.5'X480'	1	2790	59770	8747202891	TC	1	58	78	25			TL	7 205	208	158		45	2	6		0	17	0	0					
														198															
																P	16	38	146	10	2	2	2	2	0	14	0	41	
																		47		6		1	21	2	0				
02			G1752	FROM										208	AVG	16	38	145	9	2	2	2	2	0	12	0	33	41	
0.375'X120.5'X480'	3	8370	59770	8747202902	TC	1	58	78	25			TL	7 205	208	158		45	2	6		0	17	0	0					
				TO										198															
				8747202922												P	16	38	146	10	2	2	2	2	0	14	0	41	
																		47		6		1	21	2	0				

注釈 NOTES
※1 Location Orientation 位置・方向, T:頂部 Top, B:底部 Bottom, L:圧延方向 Longitudinal, C:直角方向 Transverse, Z:板厚方向 Through Thickness, R:45° 方向 45Deg. to the Longitudinal Axis
※2 GL 標点距離 Gage Length, A:50mm 平形試験片 Rectangular, B:50mm 丸形試験片 Round, C:70mm 平形試験片 Rectangular, D:70mm 丸形試験片 Round, E:80mm 平形試験片 Rectangular, F:80mm 丸形試験片 Round, G:200mm, H:2", I:8", J:5.65$\sqrt{So}$, K:4.$\sqrt{So}$
※3 RA :絞り Reduction of Area, YR:降伏比 Yield Ratio, ※4 A:合格 Acceptable, ※5 F:標準寸法 FULL SIZE, 2:2.5mm, 3:3.3mm, 4:3.33mm, 5:5.0mm, 6:6.67mm, 7:7.5mm, 8:6.7mm, 9:製品板厚 PlateThickness, ※6 P:製品分析 Product Analysis,
※7 N:焼準 Normalized, Q:焼入れ Quenched, T:焼戻し Tempered, CR:Controlled Rolled, NIC:NIC Process/TMC Process, CLC:CLC Process/TMC Process, AR:As Rolled, TMR:TMR Process/TMC Process, NR:Normalizing Rolled
SH:延性破面率 Shear Fracture, CF:脆性破面率 Crystallinity Fracture, LE:横膨出 Lateral Expansion, AGS:オーステナイト粒度 Austenite Grain Size, FGS:フェライト粒度 Ferrite Grain Size, SR:Stress Relieved/Post Weld Heat Treatment
温度 Temperature C: °C F: °F

上記注文品は御指定の規格または仕様に従って製造され、その要求事項を満足していることを証明します。

WE HEREBY CERTIFY THAT THE MATERIAL DESCRIBED HEREIN HAS BEEN MADE IN ACCORDANCE WITH THE RULES OF THE CONTRACT.

T. Adachi
君津製鐵所厚板管理グループリーダー
Head of Department
PLATE QUALITY CONTROL DEPT.
KIMITSU WORKS

AY4014509392

B

注文者 SHIPPER : HANWA CO., LTD.

注文者照合番号 REFERENCE No. : 228-68511040

契約番号 CONTRACT No. : 1-831-H1-5-X-AT01

商品名 COMMODITY : HOT ROLLED STEEL PLATES

規格 SPECIFICATION : ASME SA-516 GRADE 70-E10

文書番号 DOCUMENT No. :

需要家 CUSTOMER : EDMONTON EXCHANGER GROUP OF C-OMPANIES

**新日本製鐵株式會社
Nippon Steel Corporation**

鋼材検査証明書
INSPECTION CERTIFICATE

(AS PER EN 10204 CERTIFICATE ON MATERIAL TESTS 3.1)

本社 HEAD OFFICE : 〒100-8071 東京都千代田区丸の内二丁目6番1号 2-6-1, MARUNOUCHI, CHIYODA-KU, TOKYO 100-8071, JAPAN.

君津製鐵所 KIMITSU WORKS : 〒299-1141 千葉県君津市君津1番地 1, KIMITSU, KIMITSU-CITY, CHIBA-PREF, 299-1141 JAPAN

証明書番号 CERTIFICATE No. : P-17645 頁 PAGE : 19

発行年月日 DATE OF ISSUE : 2011-11-10

1001 2**DM*****
*****CEW**
E3001P07Q1 E07

需要家管理番号 CUSTOMER'S CONTROL No. :

寸法 DIMENSION mm, ":inch, ':feet	員数 QUANTITY	質量 MASS KG	製鋼番号 CAST No. / 試験番号 TEST No.	製品番号 PLATE No.	LOCATION ORIENTATION GL. ※1 ※2	引張試験 TENSILE TEST 耐力降伏点 YS 0.2% KSI	引張強さ TS KSI	伸び EL %	% ※3	BEND TEST 合否	LOCATION ORIENTATION ※1	SIZE ※5	衝撃試験 IMPACT TEST 2V-50F FT.LB 平均値 AVG	個々値 EACH	HBW	化学成分 CHEMICAL COMPOSITION % C	Si	Mn	P	S	Cu	Ni	Cr	Mo	Nb	V	TAl	Ceq.1	熱処理状態 CONDITION OF SUPPLY ※7
																※6 ×1000	×100 →1000	×100 →1000	×1000	×1000	×100	×100	×100	×100	×100 →1000	×100 →1000	×100	×100
																	N →1000	TE3 →1000	TE1 ×100	×100	SN →100	CA ×10000	B ×10000	TI ×100		Pcm ×100	Sol.Al ×100	Ceq.2 ×100	※7
02 0.375"X120.5"X480"	1	2790	G1950 61154	8747202171	TC	57	77	26			TL	7219		223 218 215	AVG 156	15	38 33	141 2	6 5	2	1 0	2 12	2 0	0	12	0	31	39	
															P	15	38 36	141	5 3	2	1 1	1 16	1 2	0	11	0		39	
02 0.375"X120.5"X480"	1	2790	G1950 61154	8747202181	TC	57	77	26			TL	7219		223 218 215	AVG 156	15	38 33	141 2	6 5	2	1 0	2 12	2 0	0	12	0	31	39	
															P	15	38 36	141	5 3	2	1 1	1 16	1 2	0	11	0		39	
02 0.375"X120.5"X480"	1	2790	G1950 61154	8747202191	TC	57	77	26			TL	7219		223 218 215	AVG 156	15	38 33	141 2	6 5	2	1 0	2 12	2 0	0	12	0	31	39	
															P	15	38 36	141	5 3	2	1 1	1 16	1 2	0	11	0		39	

注釈 NOTES

※1 Location Orientation 位置・方向, T:頂部 Top, B:底部 Bottom, L:圧延方向 Longitudinal, C:直角方向 Transverse, Z:板厚方向 Through Thickness, R:45° 方向 45Deg. to the Longitudinal Axis

※2 GL 標点距離 Gage Length, A:50mm 平形試験片 Rectangular, B:50mm 丸形試験片 Round, C:70mm 平形試験片 Rectangular, D:70mm 丸形試験片 Round, E:80mm 平形試験片 Rectangular, F:80mm 丸形試験片 Round, G:200mm, H:2", I:8", J:5.65$\sqrt{So}$, K:4.$\sqrt{So}$

※3 RA:絞り Reduction of Area, YR:降伏比 Yield Ratio, ※4 A:合格 Acceptable, ※5 F:標準寸法 FULL SIZE, 2:2.5mm, 3:3.3mm, 4:3.33mm, 5:5.0mm, 6:6.67mm, 7:7.5mm, 8:6.7mm, 9:製品板厚 PlateThickness, ※6 P:製品分析 Product Analysis, -

※7 N:焼準 Normalized, Q:焼入れ Quenched, T:焼戻し Tempered, CR:Controlled Rolled, NIC:NIC Process/TMC Process, CLC:CLC Process/TMC Process, AR:As Rolled, TMR:TMR Process/TMC Process, NR:Normalizing Rolled

SH:延性破面率 Shear Fracture, CF:脆性破面率 Crystallinity Fracture, LE:横膨出 Lateral Expansion, AGS:オーステナイト粒度 Austenite Grain Size, FGS:フェライト粒度 Ferrite Grain Size, SR:Stress Relieved/Post Weld Heat Treatment

温度 Temperature C: °C F: °F

上記注文品は御指定の規格または仕様に従って製造され、その要求事項を満足していることを証明します。

WE HEREBY CERTIFY THAT THE MATERIAL DESCRIBED HEREIN HAS BEEN MADE IN ACCORDANCE WITH THE RULES OF THE CONTRACT.

J. Adachi

君津製鐵所厚板管理グループリーダー
Head of Department
PLATE QUALITY CONTROL DEPT.
KIMITSU WORKS

AY4014609392

B

注文者 SHIPPER : HANWA CO., LTD.

注文者照合番号 REFERENCE No. : 228-68511040

契約番号 CONTRACT No. : 1-831-H1-5-X-AT01

商品名 COMMODITY : HOT ROLLED STEEL PLATES

規格 SPECIFICATION : ASME SA-516 GRADE 70-E10

文書番号 DOCUMENT No. :

**

新日本製鐵株式會社
Nippon Steel Corporation

鋼材検査証明書
INSPECTION CERTIFICATE

(AS PER EN 10204 CERTIFICATE ON MATERIAL TESTS 3.1)

本社 HEAD OFFICE : 〒100-8071 東京都千代田区丸の内二丁目6番1号 2-6-1, MARUNOUCHI, CHIYODA-KU, TOKYO 100-8071, JAPAN

君津製鐵所 KIMITSU WORKS : 〒299-1141 千葉県君津市君津1番地 1, KIMITSU, KIMITSU-CITY, CHIBA-PREF. 299-1141 JAPAN

証明書番号 CERTIFICATE No. : P-17645 頁 PAGE : 20

発行年月日 DATE OF ISSUE : 2011-11-10

需要家 CUSTOMER : EDMONTON EXCHANGER GROUP OF C-OMPANIES

需要家管理番号 CUSTOMER'S CONTROL No. : 1001 2**DM***** *****CEW** E3001P07Q1 E07

寸法 DIMENSION mm,″:inch,′:feet	員数 QUANTITY	質量 MASS KG	製鋼番号 CAST No. / 試験番号 TEST No.	製品番号 PLATE No.	引張試験 TENSILE TEST: LOCATION ORIENTATION 注1	GL 注2	耐力降伏点 YS 0.2% KSI	引張強さ TS KSI	伸び EL %	% 注3	曲げ試験 BEND TEST: 合否 注4	衝撃試験 IMPACT TEST: LOCATION ORIENTATION 注1	SIZE 注5	2V-50F FT.LB 平均値 AVG	個々値 EACH	HBW	化学成分 CHEMICAL COMPOSITION %: C ×100	Si ×100	Mn ×100	P ×1000	S ×1000	Cu ×100	Ni ×100	Cr ×100	Mo ×100	Nb ×100	V ×100	TAl ×100	Ceq.1 ×100	熱処理条件 CONDITION OF SUPPLY 注7
																	N ×1000	TE3 ×1000	TE1 ×100		SN ×100	CA ×10000	B ×10000	Ti ×100		Pcm ×100	Sol.Al ×100	Ceq.2 ×100	
02			G1950												223	AVG	15	38	141	6	2	1	2	2	0	12	0	31	39	
0.375″X120.5″X480″	1	2790	61154	8747202201	TC	J	57	77	26			TL	7	219	218	156		33	2	5		0	12	2	0					
															215														
																	P15	38	141	5	2	1	1	1	0	11	0	39	
																		36		3		1	16	2	0				
02			G1950	TESTED-PL											214	AVG	15	38	141	6	2	1	2	2	0	12	0	31	39	
0.375″X120.5″X480″	1	2790	61155	8747202401	TC	J	57	77	28			TL	7	213	219	156		33	2	5		0	12	2	0					
															206														
																	P15	38	141	5	2	1	1	1	0	11	0	39	
																		36		3		1	16	2	0				
02			G1950												214	AVG	15	38	141	6	2	1	2	2	0	12	0	31	39	
0.375″X120.5″X480″	1	2790	61155	8747202411	TC	J	57	77	28			TL	7	213	219	156		33	2	5		0	12	2	0					
															206														
																	P15	38	141	5	2	1	1	1	0	11	0	39	
																		36		3		1	16	2	0				

注釈 NOTES

※1 Location Orientation 位置・方向, T:頂部 Top, B:底部 Bottom, L:圧延方向 Longitudinal, C:直角方向 Transverse, Z:板厚方向 Through Thickness, R:45° 方向 45Deg. to the Longitudinal Axis

※2 GL 標点距離 Gage Length, A: 50mm 平形試験片 Rectangular, B: 50mm 丸形試験片 Round, C: 70mm 平形試験片 Rectangular, D: 70mm 丸形試験片 Round, E: 80mm 平形試験片 Rectangular, F: 80mm 丸形試験片 Round, G: 200mm, H: 2", I: 8", J: $5.65\sqrt{So}$, K: $4\sqrt{So}$

※3 RA: 絞り Reduction of Area, YR:降伏比 Yield Ratio, ※4 A:合格 Acceptable, ※5 F:標準寸法 FULL SIZE, 2: 2.5mm, 3: 3.3mm, 4: 3.33mm, 5: 5.0mm, 6: 6.67mm, 7: 7.5mm, 8: 6.7mm, 9:製品板厚 PlateThickness, ※6 P:製品分析 Product Analysis,

※7 N:焼準 Normalized, Q:焼入れ Quenched, T:焼戻し Tempered, CR: Controlled Rolled, NIC: NIC Process/TMC Process, CLC: CLC Process/TMC Process, AR: As Rolled, TMR: TMR Process/TMC Process, NR: Normalizing Rolled

SH:延性破面率 Shear Fracture, CF:脆性破面率 Crystallinity Fracture, LE:横膨出 Lateral Expansion, AGS:オーステナイト粒度 Austenite Grain Size, FGS:フェライト粒度 Ferrite Grain Size, SR: Stress Relieved/Post Weld Heat Treatment

温度 Temperature C: °C F: °F

上記注文品は御指定の規格または仕様に従って製造され、その要求事項を満足していることを証明します。

WE HEREBY CERTIFY THAT THE MATERIAL DESCRIBED HEREIN HAS BEEN MADE IN ACCORDANCE WITH THE RULES OF THE CONTRACT.

J. Adachi

君津製鐵所厚板管理グループリーダー
Head of Department
PLATE QUALITY CONTROL DEPT.
KIMITSU WORKS

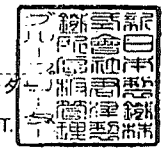

AY401470992

B

注文者 SHIPPER : HANWA CO., LTD.
注文者照合番号 REFERENCE No. : 228-68511040
契約番号 CONTRACT No. : 1-831-H1-5-X-AT01
商品名 COMMODITY : HOT ROLLED STEEL PLATES
規格 SPECIFICATION : ASME SA-516 GRADE 70-E10
文書番号 DOCUMENT No. :

**
新日本製鐵株式會社
Nippon Steel Corporation

鋼材検査証明書
INSPECTION CERTIFICATE

(AS PER EN 10204 CERTIFICATE ON MATERIAL TESTS 3.1)

需要家 CUSTOMER : EDMONTON EXCHANGER GROUP OF C-OMPANIES
需要家管理番号 CUSTOMER'S CONTROL No. :

本社 HEAD OFFICE : 〒100-8071 東京都千代田区丸の内二丁目6番1号 2-6-1, MARUNOUCHI, CHIYODA-KU, TOKYO 100-8071, JAPAN
君津製鐵所 KIMITSU WORKS : 〒299-1141 千葉県君津市君津1番地 1, KIMITSU, KIMITSU-CITY, CHIBA-PREF. 299-1141 JAPAN

証明書番号 CERTIFICATE No. : P-17645 頁 PAGE : 21
発行年月日 DATE OF ISSUE : 2011-11-10
1001 2**DM*****
*****CEW**
E3001P07Q1 E07

寸法 DIMENSION mm,":inch,':feet	員数 QUANTITY	質量 MASS KG	製鋼番号 CAST No. / 試験番号 TEST No.	製品番号 PLATE No.	LOCATION ORIENTATION GL ※1	引張試験 TENSILE TEST 耐力降伏点 YS 0.2% KSI	引張強さ TS KSI	伸び EL %	※3	BEND TEST 合否 ※4	LOCATION ORIENTATION ※1	SIZE ※5	衝撃試験 IMPACT TEST 2V-50F FT.LB 平均値 AVG	個々値 EACH	HBW	化学成分 CHEMICAL COMPOSITION % C ×100	Si ×100	Mn ×100	P ×1000	S ×1000	Cu ×100	Ni ×100	Cr ×100	Mo ×100	Nb ×100	V ×100	Ti ×100	Ceq.1 ×100	熱処理 CONDITION OF SUPPLY
																	N ×1000	TE3 ×1000	TE1 ×100		SN	CA ×10000	B ×10000	TI ×100		Pcm ×100	Sol.Al ×100	Ceq.2 ×100	
02			G1950											214	AVG	15	38	141	6	2	1	2	2	0	12	0	31	39	
0.375"X120.5"X480"	1	2790	61155	8747202421	TC	57	77	28			TL	7	213	219	156		33	2	5		0	12	2	0					
														206															
																P	15	38	141	5	2	1	1	1	0	11	0	39	
																		36		3		1	16	2	0				
02			G1950											214	AVG	15	38	141	6	2	1	2	2	0	12	0	31	39	
0.375"X120.5"X480"	1	2790	61155	8747202431	TC	57	77	28			TL	7	213	219	156		33	2	5		0	12	2	0					
														206															
																P	15	38	141	5	2	1	1	1	0	11	0	39	
																		36		3		1	16	2	0				
02			G1950	TESTED-PL										202	AVG	15	38	141	6	2	1	2	2	0	12	0	31	39	
0.375"X120.5"X480"	1	2790	61160	8747202211	TC	57	77	25			TL	7	193	184	156		33	2	5		0	12	2	0					
														193															
																P	15	38	141	5	2	1	1	1	0	11	0	39	
																		36		3		1	16	2	0				

注釈 NOTES
※1 Location Orientation 位置・方向, T:頭部 Top, B:底部 Bottom, L:圧延方向 Longitudinal, C:直角方向 Transverse, Z:板厚方向 Through Thickness, R:45° 方向 45Deg. to the Longitudinal Axis
※2 GL 標点距離 Gage Length, A:50mm 平形試験片 Rectangular, B:50mm 丸形試験片 Round, C:70mm 平形試験片 Rectangular, D:70mm 丸形試験片 Round, E:80mm 平形試験片 Rectangular, F:80mm 丸形試験片 Round, G:200mm, H:2", I:8", J:5.65$\sqrt{So}$, K:4$\sqrt{So}$
※3 RA:絞り Reduction of Area, YR:降伏比 Yield Ratio, ※4 A:合格 Acceptable, ※5 F:標準寸法 FULL SIZE, 2:2.5mm, 3:3.3mm, 4:3.33mm, 5:5.0mm, 6:6.67mm, 7:7.5mm, 8:6.7mm, 9:製品板厚 PlateThickness, ※6 P:製品分析 Product Analysis,
※7 N:焼準 Normalized, Q:焼入れ Quenched, T:焼戻し Tempered, CR:Controlled Rolled, NIC:NIC Process/TMC Process, CLC:CLC Process/TMC Process, AR:As Rolled, TMR:TMR Process/TMC Process, NR:Normalizing Rolled
SH:延性破面率 Shear Fracture, CF:脆性破面率 Crystallinity Fracture, LE:横膨出 Lateral Expansion, AGS:オーステナイト粒度 Austenite Grain Size, FGS:フェライト粒度 Ferrite Grain Size, SR:Stress Relieved/Post Weld Heat Treatment
温度 Temperature C: °C F: °F

上記注文品は御指定の規格または仕様に従って製造され、その要求事項を満足していることを証明します。

WE HEREBY CERTIFY THAT THE MATERIAL DESCRIBED HEREIN HAS BEEN MADE IN ACCORDANCE WITH THE RULES OF THE CONTRACT.

J. Adachi
君津製鐵所厚板管理グループリーダー
Head of Department
PLATE QUALITY CONTROL DEPT.
KIMITSU WORKS

AY4014809392

B

注文者 SHIPPER : HANWA CO., LTD.
注文者照合番号 REFERENCE No. : 228-68511040
契約番号 CONTRACT No. : 1-831-H1-5-X-AT01
商品名 COMMODITY : HOT ROLLED STEEL PLATES
規格 SPECIFICATION : ASME SA-516 GRADE 70-E10
文書番号 DOCUMENT No. :

**
新日本製鐵株式會社
Nippon Steel Corporation

鋼材検査証明書
INSPECTION CERTIFICATE

(AS PER EN 10204 CERTIFICATE ON MATERIAL TESTS 3.1)

需要家 CUSTOMER : EDMONTON EXCHANGER GROUP OF C-OMPANIES
需要家管理番号 CUSTOMER'S CONTROL No. : E3001P07Q1 E07

本社 HEAD OFFICE : 〒100-8071 東京都千代田区丸の内二丁目6番1号 2-6-1, MARUNOUCHI, CHIYODA-KU, TOKYO 100-8071, JAPAN
君津製鐵所 KIMITSU WORKS : 〒299-1141 千葉県君津市君津1番地 1, KIMITSU, KIMITSU-CITY, CHIBA-PREF. 299-1141 JAPAN

証明書番号 CERTIFICATE No. : P-17645 頁 PAGE : 22
発行年月日 DATE OF ISSUE : 2011-11-10
1001 2**DM***** *****CEW**

寸法 DIMENSION mm,":inch,':feet	員数 QUANTITY	質量 MASS KG	製鋼番号 CAST No. / 試験番号 TEST No.	製品番号 PLATE No.	LOCATION ORIENTATION ※1	GL ※2	引張試験 TENSILE TEST 耐力降伏点 YS 0.2% KSI	引張強さ TS KSI	伸び EL %	% ※3	BEND TEST 合否 ※4	LOCATION ORIENTATION ※1	SIZE ※5	衝撃試験 IMPACT TEST 2V-50F FT.LB 平均値 AVG	個々値 EACH	HBW	化学成分 CHEMICAL COMPOSITION % C ×100	Si ×100	Mn ×100	P ×1000	S ×1000	Cu ×100	Ni ×100	Cr ×100	Mo ×100	Nb ×100	V ×100	TAl ×100	Ceq.1 ×100	製造条件 CONDITION OF SUPPLY ※7
																		N ×1000	TE3 ×1000	TE1 ×100		SN ×100	CA ×10000	B ×10000	Ti ×100		Pcm ×100	Sol.Al ×100	Ceq.2 ×100	
02			G1950																										
0.375"X120.5"X480"	1	2790	61160	8747202221	TC	1	57	77	25			TL	7	193	202	AVG	15	38	141	6	2	1	2	2	0	12	0	31	39	
															184	156		33	2	5		0	12	2	0					
															193															
																	P	15	38	141	5	2	1	1	1	0	11	0		39
																			36		3		1	16	2	0				
02			G1950																										
0.375"X120.5"X480"	1	2790	61160	8747202231	TC	1	57	77	25			TL	7	193	202	AVG	15	38	141	6	2	1	2	2	0	12	0	31	39	
															184	156		33	2	5		0	12	2	0					
															193															
																	P	15	38	141	5	2	1	1	1	0	11	0		39
																			36		3		1	16	2	0				
02			G1950																										
0.375"X120.5"X480"	1	2790	61160	8747202241	TC	1	57	77	25			TL	7	193	202	AVG	15	38	141	6	2	1	2	2	0	12	0	31	39	
															184	156		33	2	5		0	12	2	0					
															193															
																	P	15	38	141	5	2	1	1	1	0	11	0		39
																			36		3		1	16	2	0				

注釈 NOTES
※1 Location Orientation 位置・方向, T:頂部 Top, B:底部 Bottom, L:圧延方向 Longitudinal, C:直角方向 Transverse, Z:板厚方向 Through Thickness, R:45° 方向 45Deg. to the Longitudinal Axis
※2 GL 標点距離 Gage Length, A:50mm 平形試験片 Rectangular, B:50mm 丸形試験片 Round, C:70mm 平形試験片 Rectangular, D:70mm 丸形試験片 Round, E:80mm 平形試験片 Rectangular, F:80mm 丸形試験片 Round, G:200mm, H:2", I:8", J:5.65$\sqrt{So}$, K:4$\sqrt{So}$
※3 RA:絞り Reduction of Area, YR:降伏比 Yield Ratio, ※4 A:合格 Acceptable, ※5 F:標準寸法 FULL SIZE, 2:2.5mm, 3:3.3mm, 4:3.33mm, 5:5.0mm, 6:6.67mm, 7:7.5mm, 8:6.7mm, 9:製品板厚 PlateThickness, ※6 P:製品分析 Product Analysis,
※7 N:焼準 Normalized, Q:焼入れ Quenched, T:焼戻し Tempered, CR:Controlled Rolled, NIC:NIC Process/TMC Process, CLC:CLC Process/TMC Process, AR:As Rolled, TMR:TMR Process/TMC Process, NR:Normalizing Rolled
SH:延性破面率 Shear Fracture, CF:脆性破面率 Crystallinity Fracture, LE:横膨出 Lateral Expansion, AGS:オーステナイト粒度 Austenite Grain Size, FGS:フェライト粒度 Ferrite Grain Size, SR:Stress Relieved/Post Weld Heat Treatment
温度 Temperature C: °C F: °F

上記注文品は御指定の規格または仕様に従って製造され、その要求事項を満足していることを証明します。

WE HEREBY CERTIFY THAT THE MATERIAL DESCRIBED HEREIN HAS BEEN MADE IN ACCORDANCE WITH THE RULES OF THE CONTRACT.

J. Adachi
君津製鐵所厚板管理グループリーダー
Head of Department
PLATE QUALITY CONTROL DEPT.
KIMITSU WORKS

AY401490392

B

注文者 SHIPPER : HANWA CO., LTD.

注文者照合番号 REFERENCE No. : 228-68511040

契約番号 CONTRACT No. : 1-831-H1-5-X-AT01

商品名 COMMODITY : HOT ROLLED STEEL PLATES

規格 SPECIFICATION : ASME SA-516 GRADE 70-E10

文書番号 DOCUMENT No. :

需要家 CUSTOMER : EDMONTON EXCHANGER GROUP OF C-OMPANIES

新日本製鐵株式會社
Nippon Steel Corporation

鋼材検査証明書
INSPECTION CERTIFICATE

(AS PER EN 10204 CERTIFICATE ON MATERIAL TESTS 3.1)

需要家管理番号 CUSTOMER'S CONTROL No. :

本社 HEAD OFFICE : 〒100-8071 東京都千代田区丸の内二丁目6番1号 2-6-1, MARUNOUCHI, CHIYODA-KU, TOKYO 100-8071, JAPAN

君津製鐵所 KIMITSU WORKS : 〒299-1141 千葉県君津市君津1番地 1, KIMITSU, KIMITSU-CITY, CHIBA-PREF. 299-1141 JAPAN

証明書番号 CERTIFICATE No. : P-17645 PAGE : 23

発行年月日 DATE OF ISSUE : 2011-11-10

1001 2**DM*****
*****CEW**
E3001P07Q1 E07

寸法 DIMENSION mm,":inch,':feet	員数 QUANTITY	質量 MASS KG	製鋼番号 CAST No. / 試験番号 TEST No.	製品番号 PLATE No.	LOCATION ORIENTATION ※1	GL	引張試験 TENSILE TEST 耐力降伏点 YS 0.2% KSI	引張強さ TS KSI	伸び EL %	% ※3	BEND TEST DIRECTION	LOCATION ORIENTATION ※1	SIZE	衝撃試験 IMPACT TEST 2V-50F FT.LB 平均値 AVG	個々値 EACH	HBW	化学成分 CHEMICAL COMPOSITION % C ×100	Si ×100	Mn ×100	P ×1000	S ×1000	Cu ×100	Ni ×100	Cr ×100	Mo ×100	Nb ×100 ~×1000	V ×100 ~×1000	TAl ×100	Ceq 1 ×100	CONDITION OF SUPPLY ※7
																	N ×1000	TE3 ~×1000	TE1 ×100		SN ×100	CA ×10000	B ×10000	Ti ×100		Pcm ×100	Sol. Al ×100	Ceq 2 ×100	
02 0.375"X120.5"X480"	1	2790	G1950 61161	8747202441	TC	1	57	77	26		TL	7	215	213 211 221		AVG 158	15	38 33	141 2	6 5	2	1 0	2 12	2 2	0 0	12	0	31	39	
																P	15	38 36	141	5 3	2	1 1	1 16	1 2	0 0	11	0		39	
02 0.375"X120.5"X480"	1	2790	G1950 61161	8747202451	TC	1	57	77	26		TL	7	215	213 211 221		AVG 158	15	38 33	141 2	6 5	2	1 0	2 12	2 2	0 0	12	0	31	39	
																P	15	38 36	141	5 3	2	1 1	1 16	1 2	0 0	11	0		39	
02 0.375"X120.5"X480"	1	2790	G1950 61161	8747202461	TC	1	57	77	26		TL	7	215	213 211 221		AVG 158	15	38 33	141 2	6 5	2	1 0	2 12	2 2	0 0	12	0	31	39	
																P	15	38 36	141	5 3	2	1 1	1 16	1 2	0 0	11	0		39	

注釈 NOTES

※1 Location Orientation 位置・方向, T:頭部 Top, B:底部 Bottom, L:圧延方向 Longitudinal, C:直角方向 Transverse, Z:板厚方向 Through Thickness, R:45° 方向 45Deg. to the Longitudinal Axis

※2 GL 標点距離 Gage Length, A:50mm 平形試験片 Rectangular, B:50mm 丸形試験片 Round, C:70mm 平形試験片 Rectangular, D:70mm 丸形試験片 Round, E:80mm 平形試験片 Rectangular, F:80mm 丸形試験片 Round, G:200mm, H:2", I:8", J:5.65$\sqrt{So}$, K:4$\sqrt{So}$

※3 RA:絞り Reduction of Area, YR:降伏比 Yield Ratio, ※4 A:合格 Acceptable, ※5 F:標準寸法 FULL SIZE, 2:2.5mm, 3:3.3mm, 4:3.33mm, 5:5.0mm, 6:6.67mm, 7:7.5mm, 8:6.7mm, 9:製品板厚 PlateThickness, ※6 P:製品分析 Product Analysis,

※7 N:焼準 Normalized, Q:焼入れ Quenched, T:焼戻し Tempered, CR:ControlledRolled, NIC:NIC Process/TMC Process, CLC:CLC Process/TMC Process, AR:As Rolled, TMR:TMR Process/TMC Process, NR:Normalizing Rolled

SH:延性破面率 Shear Fracture, CF:脆性破面率 Crystallinity Fracture, LE:横膨出 Lateral Expansion, AGS:オーステナイト粒度 Austenite Grain Size, FGS:フェライト粒度 Ferrite Grain Size, SR:Stress Relieved/Post Weld Heat Treatment

温度 Temperature C: F:

上記注文品は御指定の規格または仕様に従って製造され、その要求事項を満足していることを証明します。

WE HEREBY CERTIFY THAT THE MATERIAL DESCRIBED HEREIN HAS BEEN MADE IN ACCORDANCE WITH THE RULES OF THE CONTRACT.

J. Adachi

君津製鐵所厚板管理グループリーダー
Head of Department
PLATE QUALITY CONTROL DEPT.
KIMITSU WORKS

AY4015009392

B

注文者 SHIPPER : HANWA CO., LTD.
注文者照合番号 REFERENCE No. : 228-68511040
契約番号 CONTRACT No. : 1-831-H1-5-X-AT01
商品名 COMMODITY : HOT ROLLED STEEL PLATES
規格 SPECIFICATION : ASME SA-516 GRADE 70-E10
文書番号 DOCUMENT No. :

**新日本製鐵株式會社
Nippon Steel Corporation**

鋼材検査証明書
INSPECTION CERTIFICATE

(AS PER EN 10204 CERTIFICATE ON MATERIAL TESTS 3.1)

需要家 CUSTOMER : EDMONTON EXCHANGER GROUP OF C-OMPANIES

本社 HEAD OFFICE : 〒100-8071 東京都千代田区丸の内二丁目6番1号 2-6-1, MARUNOUCHI, CHIYODA-KU, TOKYO 100-8071, JAPAN
君津製鐵所 KIMITSU WORKS : 〒299-1141 千葉県君津市君津1番地 1, KIMITSU, KIMITSU-CITY, CHIBA-PREF. 299-1141 JAPAN

証明書番号 CERTIFICATE No. : P-17645 PAGE : 24
発行年月日 DATE OF ISSUE : 2011-11-10
1001 2**DM*****
*****CEW**
需要家管理番号 CUSTOMER'S CONTROL No. : E3001P07Q1 E07

寸法 DIMENSION mm,":inch,':feet	員数 QUANTITY	質量 MASS KG	製鋼番号 CAST No. / 試験番号 TEST No.	製品番号 PLATE No.	引張試験 TENSILE TEST: LOCATION ORIENTATION ※1	GL ※2	耐力降伏点 YS 0.2% KSI	引張強さ TS KSI	伸び EL %	% ※3	曲げ試験 BEND TEST 合否 ※4	衝撃試験 IMPACT TEST: LOCATION ORIENTATION ※1	SIZE ※5	2V-50F FT.LB 平均値 AVG	個々値 EACH	HBW	化学成分 CHEMICAL COMPOSITION %: C ×100	Si ×100	Mn ×100	P ×1000	S ×1000	Cu ×100	Ni ×100	Cr ×100	Mo ×100	Nb ×100 ~1000	V ×100 ~1000	TAl ×100	Ceq.1 ×100	処理条件 CONDITION OF SUPPLY ※7
																	N ~1000	TE3 ~1000	TE1 ×100		SN ~100	CA ×10000	B ×10000	TI ×100		Pcm ×100	Sol. Al ×100	Ceq.2 ×100	
02 0.375"X120.5"X480"	1	2790	G1950 61161	8747202471	TC	1	57	77	26			TL	7	215	213 211 221	AVG 158	15	38 33	141 2	6 5	2	1 0	2 12	2 2	0 0	12	0	31	39	
																P	15	38 36	141	5 3	2	1 1	1 16	1 2	0 0	11	0		39	
02 0.375"X120.5"X480"	1	2790	G1950 61162	TESTED-PL 8747202371	TC	1	56	77	27			TL	7	202	205 188 213	AVG 144	15	38 33	141 2	6 5	2	1 0	2 12	2 2	0 0	12	0	31	39	
																P	15	38 36	141	5 3	2	1 1	1 16	1 2	0 0	11	0		39	
02 0.375"X120.5"X480"	1	2790	G1950 61162	8747202381	TC	1	56	77	27			TL	7	202	205 188 213	AVG 144	15	38 33	141 2	6 5	2	1 0	2 12	2 2	0 0	12	0	31	39	
																P	15	38 36	141	5 3	2	1 1	1 16	1 2	0 0	11	0		39	

注釈 NOTES
※1 Location Orientation 位置・方向, T:頂部 Top, B:底部 Bottom, L:圧延方向 Longitudinal, C:直角方向 Transverse, Z:板厚方向 Through Thickness, R:45° 方向 45Deg. to the Longitudinal Axis
※2 GL 標点距離 Gage Length, A:50mm 平形試験片 Rectangular, B:50mm 丸形試験片 Round, C:70mm 平形試験片 Rectangular, D:70mm 丸形試験片 Round, E:80mm 平形試験片 Rectangular, F:80mm 丸形試験片 Round, G:200mm, H:2", I:8", J:5.65$\sqrt{So}$, K:4$\sqrt{So}$
※3 RA:絞り Reduction of Area, YR:降伏比 Yield Ratio, ※4 A:合格 Acceptable, ※5 F:標準寸法 FULL SIZE, 2:2.5mm, 3:3.3mm, 4:3.33mm, 5:5.0mm, 6:6.67mm, 7:7.5mm, 8:6.7mm, 9:製品板厚 PlateThickness, ※6 P:製品分析 Product Analysis,
※7 N:焼準 Normalized, Q:焼入れ Quenched, T:焼戻し Tempered, CR:Controlled Rolled, NIC:NIC Process/TMC Process, CLC:CLC Process/TMC Process, AR:As Rolled, TMR:TMR Process/TMC Process, NR:Normalizing Rolled
SH:延性破面率 Shear Fracture, CF:脆性破面率 Crystallinity Fracture, LE:横膨出 Lateral Expansion, AGS:オーステナイト粒度 Austenite Grain Size, FGS:フェライト粒度 Ferrite Grain Size, SR:Stress Relieved/Post Weld Heat Treatment
温度 Temperature C: °C F: °F

上記注文品は御指定の規格または仕様に従って製造され、その要求事項を満足していることを証明します。

WE HEREBY CERTIFY THAT THE MATERIAL DESCRIBED HEREIN HAS BEEN MADE IN ACCORDANCE WITH THE RULES OF THE CONTRACT.

T. Adachi

君津製鐵所厚板管理グループリーダー
Head of Department
PLATE QUALITY CONTROL DEPT.
KIMITSU WORKS

AX4015109392

B

注文者 SHIPPER : HANWA CO., LTD.
注文者照合番号 REFERENCE No. : 228-68511040
契約番号 CONTRACT No. : 1-831-H1-5-X-AT01
商品名 COMMODITY : HOT ROLLED STEEL PLATES
規格 SPECIFICATION : ASME SA-516 GRADE 70-E10
文書番号 DOCUMENT No. :

**

新日本製鐵株式會社
Nippon Steel Corporation

鋼材検査証明書
INSPECTION CERTIFICATE

(AS PER EN 10204 CERTIFICATE ON MATERIAL TESTS 3.1)

需要家 CUSTOMER : EDMONTON EXCHANGER GROUP OF C-OMPANIES

本社 HEAD OFFICE : 〒100-8071 東京都千代田区丸の内二丁目6番1号 2-6-1, MARUNOUCHI, CHIYODA-KU, TOKYO 100-8071, JAPAN
君津製鐵所 KIMITSU WORKS : 〒299-1141 千葉県君津市君津1番地 1, KIMITSU, KIMITSU-CITY, CHIBA-PREF, 299-1141 JAPAN

証明書番号 CERTIFICATE No. : P-17645 PAGE : 25
発行年月日 DATE OF ISSUE : 2011-11-10
1001 2**DM*****
*****CEW**
需要家管理番号 CUSTOMER'S CONTROL No. : E3001P07Q1 E07

寸法 DIMENSION mm,″:inch,′:feet	員数 QUANTITY	質量 MASS KG	製鋼番号 CAST No. / 試験番号 TEST No.	製品番号 PLATE No.	LOCATION ORIENTATION ※1	GL ※2	引張試験 TENSILE TEST 耐力降伏点 YS 0.2% KSI	引張強さ TS KSI	伸び EL %	% ※3	BEND TEST ※4	LOCATION ORIENTATION ※1	SIZE ※5	衝撃試験 IMPACT TEST 2V-50F FT.LB 平均値 AVG	個々値 EACH	HBW	化学成分 CHEMICAL COMPOSITION % C ×100	Si ×100	Mn ×100	P ×1000	S ×1000	Cu ×100	Ni ×100	Cr ×100	Mo ×100	Nb ×100 ×1000	V ×100 ×1000	Ti ×100	Pcm ×100	Sol. Al ×100	Ceq. 1 ×100	熱処理の CONDITION OF SUPPLY ※7
																	C	N ×1000	Si ×100	Mn ×1000	TE3 ×1000	TE1 ×100	P ×1000	S ×100	Cu ×100	SN ×100	Ni ×10000	Cr ×10000	Mo ×100	B ×10000	Ti ×100	Pcm ×100	Sol. Al ×100	Ceq. 2 ×100	
02 0.375′X120.5′X480′	1	2790	G1950 61162	8747202391	TC	I	56	77	27			TL	7	202	205	AVG	15	38	141	6	2	1	2	2	0	12	0	31	39		
															188	144		33	2	5		0	12	2	0						
															213																
																	P	15	38	141	5	2	1	1	1	0	11	0		39		
																		36		3		1	16	2	0						
02 0.375′X120.5′X480′	1	2790	G1950 61165	TESTED-PL 8747202251	TC	I	58	77	26			TL	7	195	186	AVG	15	38	141	6	2	1	2	2	0	12	0	31	39		
															192	158		33	2	5		0	12	2	0						
															207																
																	P	15	38	141	5	2	1	1	1	0	11	0		39		
																		36		3		1	16	2	0						
02 0.375′X120.5′X480′	1	2790	G1950 61165	8747202261	TC	I	58	77	26			TL	7	195	186	AVG	15	38	141	6	2	1	2	2	0	12	0	31	39		
															192	158		33	2	5		0	12	2	0						
															207																
																	P	15	38	141	5	2	1	1	1	0	11	0		39		
																		36		3		1	16	2	0						

注釈 NOTES
※1 Location Orientation 位置・方向, T:頭部 Top, B:底部 Bottom, L:圧延方向 Longitudinal, C:直角方向 Transverse, Z:板厚方向 Through Thickness, R:45° 方向 45Deg. to the Longitudinal Axis
※2 GL 標点距離 Gage Length, A:50mm 平形試験片 Rectangular, B:50mm 丸形試験片 Round, C:70mm 平形試験片 Rectangular, D:70mm 丸形試験片 Round, E:80mm 平形試験片 Rectangular, F:80mm 丸形試験片 Round, G:200mm, H:2", I:8", J:5.65$\sqrt{So}$, K:4$\sqrt{So}$
※3 RA:絞り Reduction of Area, YR:降伏比 Yield Ratio, ※4 A:合格 Acceptable, ※5 F:標準寸法 FULL SIZE, 2:2.5mm, 3:3.3mm, 4:3.33mm, 5:5.0mm, 6:6.67mm, 7:7.5mm, 8:6.7mm, 9:製品板厚 PlateThickness, ※6 P:製品分析 Product Analysis,
※7 N:焼準 Normalized, Q:焼入れ Quenched, T:焼戻し Tempered, CR:Controlled Rolled, NIC:NIC Process/TMC Process, CLC:CLC Process/TMC Process, AR:As Rolled, TMR:TMR Process/TMC Process, NR:Normalizing Rolled
SH:延性破面率 Shear Fracture, CF:脆性破面率 Crystallinity Fracture, LE:横膨出 Lateral Expansion, AGS:オーステナイト粒度 Austenite Grain Size, FGS:フェライト粒度 Ferrite Grain Size, SR:Stress Relieved/Post Weld Heat Treatment
温度 Temperature C: °C F: °F

上記注文品は御指定の規格または仕様に従って製造され、その要求事項を満足していることを証明します。

WE HEREBY CERTIFY THAT THE MATERIAL DESCRIBED HEREIN HAS BEEN MADE IN ACCORDANCE WITH THE RULES OF THE CONTRACT.

J. Adachi

君津製鐵所厚板管理グループリーダー
Head of Department
PLATE QUALITY CONTROL DEPT.
KIMITSU WORKS

AY4015209392

B

注文者 SHIPPER : HANWA CO., LTD.
注文者照合番号 REFERENCE No. : 228-68511040
契約番号 CONTRACT No. : 1-831-H1-5-X-AT01
商品名 COMMODITY : HOT ROLLED STEEL PLATES
規格 SPECIFICATION : ASME SA-516 GRADE 70-E10
文書番号 DOCUMENT No. :
需要家 CUSTOMER : EDMONTON EXCHANGER GROUP OF C-OMPANIES

**
新日本製鐵株式會社
Nippon Steel Corporation

鋼材検査証明書
INSPECTION CERTIFICATE

(AS PER EN 10204 CERTIFICATE ON MATERIAL TESTS 3.1)

本社 HEAD OFFICE : 〒100-8071 東京都千代田区丸の内二丁目6番1号 2-6-1, MARUNOUCHI, CHIYODA-KU, TOKYO 100-8071, JAPAN
君津製鐵所 KIMITSU WORKS : 〒299-1141 千葉県君津市君津1番地 1, KIMITSU, KIMITSU-CITY, CHIBA-PREF. 299-1141 JAPAN

証明書番号 CERTIFICATE No. : P-17645 頁 PAGE : 26
発行年月日 DATE OF ISSUE : 2011-11-10
1001
需要家管理番号 CUSTOMER'S CONTROL No. : 2**DM*****
*****CEW**
E3001P07Q1 E07

寸法 DIMENSION mm,":inch,':feet	員数 QUANTITY	質量 MASS KG	製鋼番号 CAST No. / 試験番号 TEST No.	製品番号 PLATE No.	LOCATION ORIENTATION GL ※1	引張試験 TENSILE TEST 耐力降伏点 YS 0.2% KSI	引張強さ TS KSI	伸び EL %	% ※3	BEND TEST 曲げ試験 ※2	LOCATION ORIENTATION ※1	衝撃試験 IMPACT TEST 2V-50F FT.LB 平均値 AVG	個々値 EACH	HBW	化学成分 CHEMICAL COMPOSITION %	C ×100	Si ×100	Mn ×100	P ×1000	S ×1000	Cu ×100	Ni ×100	Cr ×100	Mo ×100	Nb ×100	V ×100	Ta ×100	Ceq.1 ×100	CONDITION OF SUPPLY ※7
02			G1950										186															
0.375"X120.5"X480"	1	2790	61165	8747202271	TC	58	77	26			TL	7 195	192	AVG	15	38	141	6	2	1	2	2	0	12	0	31	39	
													207	158		33	2	5		0	12	2	0					
															P	15	38	141	5	2	1	1	1	0	11	0		39	
																	36		3		1	16	2	0					
02			G1950										186															
0.375"X120.5"X480"	1	2790	61165	8747202281	TC	58	77	26			TL	7 195	192	AVG	15	38	141	6	2	1	2	2	0	12	0	31	39	
													207	158		33	2	5		0	12	2	0					
															P	15	38	141	5	2	1	1	1	0	11	0		39	
																	36		3		1	16	2	0					
02			G1950	TESTED-PL									205															
0.375"X120.5"X480"	1	2790	61166	8747202481	TC	57	77	30			TL	7 209	203	AVG	15	38	141	6	2	1	2	2	0	12	0	31	39	
													220	156		33	2	5		0	12	2	0					
															P	15	38	141	5	2	1	1	1	0	11	0		39	
																	36		3		1	16	2	0					

	N	TE3	TE1	SN	CA	B	TI	Pcm	Sol. Al	Ceq.2
	×1000	~+4000	~+1000	×100	×100	×10000	×100	×100	×100	×100
02	15	38	141	6	2	1	2	2	0	12	0	31	39
0.375"X120.5"X480"		33	2	5		0	12	2	0				
	P 15	38	141	5	2	1	1	1	0	11	0		39
		36		3		1	16	2	0				
02	15	38	141	6	2	1	2	2	0	12	0	31	39
0.375"X120.5"X480"		33	2	5		0	12	2	0				
	P 15	38	141	5	2	1	1	1	0	11	0		39
		36		3		1	16	2	0				
02	15	38	141	6	2	1	2	2	0	12	0	31	39
0.375"X120.5"X480"		33	2	5		0	12	2	0				
	P 15	38	141	5	2	1	1	1	0	11	0		39
		36		3		1	16	2	0				

注釈 NOTES ※1 Location Orientation 位置・方向, T:頭部 Top, B:底部 Bottom, L:圧延方向 Longitudinal, C:直角方向 Transverse, Z:板厚方向 Through Thickness, R:45° 方向 45Deg. to the Longitudinal Axis
※2 GL 標点距離 Gage Length, A:50mm 平形試験片 Rectangular, B:50mm 丸形試験片 Round, C:70mm 平形試験片 Rectangular, D:70mm 丸形試験片 Round, E:80mm 平形試験片 Rectangular, F:80mm 丸形試験片 Round, G:200mm, H:2", I:8", J:5.65$\sqrt{So}$, K:4$\sqrt{So}$
※3 RA:絞り Reduction of Area, YR:降伏比 Yield Ratio, ※4 A:合格 Acceptable, ※5 F:標準寸法 FULL SIZE, 2:2.5mm, 3:3.3mm, 4:3.33mm, 5:5.0mm, 6:6.67mm, 7:7.5mm, 8:6.7mm, 9:製品板厚 PlateThickness, ※6 P:製品分析 Product Analysis,
※7 N:焼準 Normalized, Q:焼入れ Quenched, T:焼戻し Tempered, CR:Controlled Rolled, NIC:NIC Process/TMC Process, CLC:CLC Process/TMC Process, AR:As-Rolled, TMR:TMR Process/TMC Process, NR:Normalizing Rolled
SH:延性破面率 Shear Fracture, CF:脆性破面率 Crystallinity Fracture, LE:横膨出 Lateral Expansion, AGS:オーステナイト粒度 Austenite Grain Size, FGS:フェライト粒度 Ferrite Grain Size, SR:Stress Relieved/Post Weld Heat Treatment
温度 Temperature C: F:

上記注文品は御指定の規格または仕様に従って製造され、その要求事項を満足していることを証明します。

WE HEREBY CERTIFY THAT THE MATERIAL DESCRIBED HEREIN HAS BEEN MADE IN ACCORDANCE WITH THE RULES OF THE CONTRACT.

J. Adachi
君津製鐵所厚板管理グループリーダー
Head of Department
PLATE QUALITY CONTROL DEPT.
KIMITSU WORKS

AX4015309392

B

注文者 SHIPPER : HANWA CO., LTD.
注文者照合番号 REFERENCE No. : 228-68511040
契約番号 CONTRACT No. : 1-831-H1-5-X-AT01
商品名 COMMODITY : HOT ROLLED STEEL PLATES
規格 SPECIFICATION : ASME SA-516 GRADE 70-E10
文書番号 DOCUMENT No. :
需要家 CUSTOMER : EDMONTON EXCHANGER GROUP OF C-OMPANIES

**
新日本製鐵株式會社
Nippon Steel Corporation

鋼材検査証明書
INSPECTION CERTIFICATE

(AS PER EN 10204 CERTIFICATE ON MATERIAL TESTS 3.1)

本社 HEAD OFFICE : 〒100-8071 東京都千代田区丸の内二丁目6番1号 2-6-1, MARUNOUCHI, CHIYODA-KU, TOKYO 100-8071, JAPAN
君津製鐵所 KIMITSU WORKS : 〒299-1141 千葉県君津市君津1番地 1, KIMITSU, KIMITSU-CITY, CHIBA-PREF. 299-1141 JAPAN

証明書番号 CERTIFICATE No. : P-17645
頁 PAGE : 27
発行年月日 DATE OF ISSUE : 2011-11-10
1001
需要家管理番号 CUSTOMER'S CONTROL No. : 2**DM*****
*****CEW**
E3001P07Q1 E07

寸法 DIMENSION mm,":inch,':feet	員数 QUANTITY	質量 MASS KG	製鋼番号 CAST No. / 試験番号 TEST No.	製品番号 PLATE No.	LOCATION ORIENTATION GL. 注1	引張試験 TENSILE TEST 耐力降伏点 YS 0.2% KSI	引張強さ TS	伸び EL %	% 注3	BEND TEST 曲げ試験 注4	LOCATION ORIENTATION SIZE 注1 注5	衝撃試験 IMPACT TEST 2V-50F FT.LB 平均値 AVG	個々値 EACH	HBW	化学成分 CHEMICAL COMPOSITION % C ×100	Si ×100	Mn ×100	P ×1000	S ×1000	Cu ×100	Ni ×100	Cr ×100	Mo ×100	Nb ×100 <0.100	V ×100 <0.100	Ti ×100	Ceq.1 ×100	熱処理 CONDITION OF SUPPLY 注7
															N <0.0100	TE3 <0.1000	TE1 ×100			SN <100	CA ×10000	B ×10000	Ti ×100		Pcm ×100	Sol.Al ×100	Ceq.2 ×100	
02			G1950																								
0.375"X120.5"X480"	1	2790	61166	8747202491	TC	57	77	30			TL	209	205	AVG	15	38	141	6	2	1	2	2	0	12	0	31	39	
													203	156		33	2	5		0	12	2	0					
													220															
														P	15	38	141	5	2	1	1	1	0	11	0		39	
																36		3		1	16	2	0					
02			G1950										205														
0.375"X120.5"X480"	1	2790	61166	8747202501	TC	57	77	30			TL	209	203	AVG	15	38	141	6	2	1	2	2	0	12	0	31	39	
													220	156		33	2	5		0	12	2	0					
														P	15	38	141	5	2	1	1	1	0	11	0		39	
																36		3		1	16	2	0					
02			G1950										205														
0.375"X120.5"X480"	1	2790	61166	8747202511	TC	57	77	30			TL	209	203	AVG	15	38	141	6	2	1	2	2	0	12	0	31	39	
													220	156		33	2	5		0	12	2	0					
														P	15	38	141	5	2	1	1	1	0	11	0		39	
																36		3		1	16	2	0					

注釈 NOTES
※1 Location Orientation 位置・方向, T:頂部 Top, B:底部 Bottom, L:圧延方向 Longitudinal, C:直角方向 Transverse, Z:板厚方向 Through Thickness, R:45° 方向 45Deg. to the Longitudinal Axis
※2 GL 標点距離 Gage Length, A:50mm 平形試験片 Rectangular, B:50mm丸形試験片 Round, C:70mm平形試験片 Rectangular, D:70mm丸形試験片 Round, E:80mm平形試験片 Rectangular, F:80mm丸形試験片 Round, G:200mm, H:2", I:8", J:5.65$\sqrt{So}$, K:4$\sqrt{So}$
※3 RA:絞り Reduction of Area, YR:降伏比 Yield Ratio, ※4 A:合格 Acceptable, ※5 F:標準寸法 FULL SIZE, 2:2.5mm, 3:3.3mm, 4:3.33mm, 5:5.0mm, 6:6.67mm, 7:7.5mm, 8:6.7mm, 9:製品板厚 PlateThickness, ※6 P:製品分析 Product Analysis,
※7 N:焼準 Normalized, Q:焼入れ Quenched, T:焼戻し Tempered, CR:Controlled Rolled, NIC:NIC Process/TMC Process, CLC:CLC Process/TMC Process, AR:As Rolled, TMR:TMR Process/TMC Process, NR:Normalizing Rolled
SH:延性破面率 Shear Fracture, CF:脆性破面率 Crystallinity Fracture, LE:横膨出 Lateral Expansion, AGS:オーステナイト粒度 Austenite Grain Size, FGS:フェライト粒度 Ferrite Grain Size, SR:Stress Relieved/Post Weld Heat Treatment
温度 Temperature C: °C F: °F

上記注文品は御指定の規格または仕様に従って製造され、その要求事項を満足していることを証明します。

WE HEREBY CERTIFY THAT THE MATERIAL DESCRIBED HEREIN HAS BEEN MADE IN ACCORDANCE WITH THE RULES OF THE CONTRACT.

T. Adachi
君津製鐵所厚板管理グループリーダー
Head of Department
PLATE QUALITY CONTROL DEPT.
KIMITSU WORKS

AX4015409392

B

注文者 SHIPPER : HANWA CO., LTD.
注文者照合番号 REFERENCE No. : 228-68511040
契約番号 CONTRACT No. : 1-831-H1-5-X-AT01
商品名 COMMODITY : HOT ROLLED STEEL PLATES
規格 SPECIFICATION : ASME SA-516 GRADE 70-E10
文書番号 DOCUMENT No. :

**新日本製鐵株式會社
Nippon Steel Corporation

鋼材検査証明書
INSPECTION CERTIFICATE

(AS PER EN 10204 CERTIFICATE ON MATERIAL TESTS 3.1)

需要家 CUSTOMER : EDMONTON EXCHANGER GROUP OF C-OMPANIES
需要家管理番号 CUSTOMER'S CONTROL No. : E3001P07Q1 E07

本社 HEAD OFFICE : 〒100-8071 東京都千代田区丸の内二丁目6番1号 2-6-1, MARUNOUCHI, CHIYODA-KU, TOKYO 100-8071, JAPAN
君津製鐵所 KIMITSU WORKS : 〒299-1141 千葉県君津市君津1番地 1, KIMITSU, KIMITSU-CITY, CHIBA-PREF, 299-1141 JAPAN

証明書番号 CERTIFICATE No. : P-17645 頁 PAGE : 28
発行年月日 DATE OF ISSUE : 2011-11-10
1001 2**DM*****
*****CEW**

寸法 DIMENSION mm,″:inch,′:feet	員数 QUANTITY	質量 MASS KG	製鋼番号 CAST No. / 試験番号 TEST No.	製品番号 PLATE No.	LOCATION ORIENTATION ※1	GL ※2	引張試験 TENSILE TEST 耐力降伏点 YS 0.2% KSI	引張強さ TS KSI	伸び EL %	% ※3	BEND TEST	LOCATION ORIENTATION ※1	SIZE ※4	衝撃試験 IMPACT TEST 2V-50F FT.LB 平均値 AVG	個々値 EACH	HBW	化学成分 CHEMICAL COMPOSITION % C	Si	Mn	P	S	Cu	Ni	Cr	Mo	Nb	V	TAl	Ceq.1	熱処理 CONDITION OF SUPPLY ※7
02			G1950	TESTED-PL											211		×100	×100	×100	×1000	×1000	×100	×100	×100	×100	×100	×100	×100	×100	
0.375″X120.5″X480′	1	2790	61168	8747202291	TC	1	58	77	26			TL	7	201	183	AVG 156	15	38	141	6	2	1	2	2	0	12	0	31	39	
															210			33	2	5		0	12	2	0					
																		N	TE3	TE1		SN	CA	B	TI		Pcm	Sol. Al	Ceq.2	
																	×1000	×1000	×100	×100		×100	×10000	×10000	×100		×100	×100	×100	
																P	15	38	141	5	2	1	1	1	0	11	0		39	
																		36		3		1	16	2	0					
02			G1950												211															
0.375″X120.5″X480′	1	2790	61168	8747202301	TC	1	58	77	26			TL	7	201	183	AVG 156	15	38	141	6	2	1	2	2	0	12	0	31	39	
															210			33	2	5		0	12	2	0					
																P	15	38	141	5	2	1	1	1	0	11	0		39	
																		36		3		1	16	2	0					
02			G1950												211															
0.375″X120.5″X480′	1	2790	61168	8747202311	TC	1	58	77	26			TL	7	201	183	AVG 156	15	38	141	6	2	1	2	2	0	12	0	31	39	
															210			33	2	5		0	12	2	0					
																P	15	38	141	5	2	1	1	1	0	11	0		39	
																		36		3		1	16	2	0					

注釈 NOTES
※1 Location Orientation 位置・方向, T:頂部 Top, B:底部 Bottom, L:圧延方向 Longitudinal, C:直角方向 Transverse, Z:板厚方向 Through Thickness, R:45° 方向 45Deg. to the Longitudinal Axis.
※2 GL 標点距離 Gage Length, A:50mm 平形試験片 Rectangular, B:50mm 丸形試験片 Round, C:70mm 平形試験片 Rectangular, D:70mm 丸形試験片 Round, E:80mm 平形試験片 Rectangular, F:80mm 丸形試験片 Round, G:200mm, H:2", I:8", J:5.65$\sqrt{So}$, K:4$\sqrt{So}$
※3 RA:絞り Reduction of Area, YR:降伏比 Yield Ratio, ※4 A:合格 Acceptable, ※5 F:標準寸法 FULL SIZE, 2:2.5mm, 3:3.3mm, 4:3.33mm, 5:5.0mm, 6:6.67mm, 7:7.5mm, 8:6.7mm, 9:製品板厚 PlateThickness, ※6 P:製品分析 Product Analysis,
※7 N:焼準 Normalized, Q:焼入れ Quenched, T:焼戻し Tempered, CR:Controlled Rolled, NIC:NIC Process/TMC Process, CLC:CLC Process/TMC Process, AR:As Rolled, TMR:TMR Process/TMC Process, NR:Normalizing Rolled
SH:延性破面率 Shear Fracture, CF:脆性破面率 Crystallinity Fracture, LE:横膨出 Lateral Expansion, AGS:オーステナイト粒度 Austenite Grain Size, FGS:フェライト粒度 Ferrite Grain Size, SR:Stress Relieved/Post Weld Heat Treatment
温度 Temperature C: °C F: °F

上記注文品は御指定の規格または仕様に従って製造され、その要求事項を満足していることを証明します。

WE HEREBY CERTIFY THAT THE MATERIAL DESCRIBED HEREIN HAS BEEN MADE IN ACCORDANCE WITH THE RULES OF THE CONTRACT.

J. Adachi
君津製鐵所厚板管理グループリーダー
Head of Department
PLATE QUALITY CONTROL DEPT.
KIMITSU WORKS

AY4015509392

B

**新日本製鐵株式會社
Nippon Steel Corporation

鋼材検査証明書
INSPECTION CERTIFICATE

本社 HEAD OFFICE : 〒100-8071 東京都千代田区丸の内二丁目6番1号 2-6-1, MARUNOUCHI, CHIYODA-KU, TOKYO 100-8071, JAPAN
君津製鐵所 KIMITSU WORKS : 〒299-1141 千葉県君津市君津 1 番地 1, KIMITSU, KIMITSU-CITY, CHIBA-PREF. 299-1141 JAPAN

注文者 SHIPPER : HANWA CO., LTD.
注文者照合番号 REFERENCE No. : 228-68511040
契約番号 CONTRACT No. : 1-831-H1-5-X-AT01
商品名 COMMODITY : HOT ROLLED STEEL PLATES
規格 SPECIFICATION : ASME SA-516 GRADE 70-E10
(AS PER EN 10204 CERTIFICATE ON MATERIAL TESTS 3.1)
文書番号 DOCUMENT No. :
需要家 CUSTOMER : EDMONTON EXCHANGER GROUP OF C-OMPANIES
需要家管理番号 CUSTOMER'S CONTROL No. : E3001P07Q1 E07

証明書番号 CERTIFICATE No. : P-17645 頁 PAGE : 29
発行年月日 DATE OF ISSUE : 2011-11-10
1001 2**DM***** *****CEW**

寸法 DIMENSION mm,″:inch,′:feet	員数 QUANTITY	質量 MASS KG	製鋼番号 CAST No. / 試験番号 TEST No.	製品番号 PLATE No.	引張試験 TENSILE TEST: LOCATION ORIENTATION GL ※1	耐力降伏点 YS 0.2% KSI	引張強さ TS KSI	伸び EL %	% ※3	BEND TEST 曲げ試験 ※2	衝撃試験 IMPACT TEST: LOCATION ORIENTATION ※1	SIZE ※2	2V-50F FT.LB 平均値 AVG	個々値 EACH	HBW	化学成分 CHEMICAL COMPOSITION %: C ×100	Si ×100	Mn ×100	P ×1000	S ×1000	Cu ×100	Ni ×100	Cr ×100	Mo ×100	Nb ×100 ~1000	V ×100 ~1000	TAl ×100	Ceq.1 ×100	熱処理条件 CONDITION OF SUPPLY ※7
																N ~1000	TE3 ~1000	TE1 ×100	×100	SN ~100	CA ×10000	B ×10000	TI ×100		Pcm ×100	Sol.Al ×100	Ceq.2 ×100	
02			G1950											211	AVG	15	38	141	6	2	1	2	2	0	12	0	31	39	
0.375″X120.5″X480′	1	2790	61168	8747202321	TC	58	77	26			TL	7	201	183	156		33	2	5		0	12	2	0					
														210														
																P15	38	141	5	2	1	1	1	0	11	0		39	
																	36		3		1	16	2	0					
02			G1950	TESTED-PL										194	AVG	15	38	141	6	2	1	2	2	0	12	0	31	39	
0.375″X120.5″X480′	1	2790	61169	8747202521	TC	57	77	27			TL	7	197	198	157		33	2	5		0	12	2	0					
														200														
																P15	38	141	5	2	1	1	1	0	11	0		39	
																	36		3		1	16	2	0					
02			G1950											194	AVG	15	38	141	6	2	1	2	2	0	12	0	31	39	
0.375″X120.5″X480′	1	2790	61169	8747202531	TC	57	77	27			TL	7	197	198	157		33	2	5		0	12	2	0					
														200														
																P15	38	141	5	2	1	1	1	0	11	0		39	
																	36		3		1	16	2	0					

注釈 NOTES ※1 Location Orientation 位置・方向, T:頂部 Top, B:底部 Bottom, L:圧延方向 Longitudinal, C:直角方向 Transverse, Z:板厚方向 Through Thickness, R:45° 方向 45Deg. to the Longitudinal Axis
※2 GL 標点距離 Gage Length, A:50mm 平形試験片 Rectangular, B:50mm 丸形試験片 Round, C:70mm 平形試験片 Rectangular, D:70mm 丸形試験片 Round, E:80mm 平形試験片 Rectangular, F:80mm 丸形試験片 Round, G:200mm, H:2", I:8", J:5.65$\sqrt{So}$, K:4.$\sqrt{So}$
※3 RA:絞り Reduction of Area, YR:降伏比 Yield Ratio, ※4 A:合格 Acceptable, ※5 F:標準寸法 FULL SIZE, 2:2.5mm, 3:3.3mm, 4:3.33mm, 5:5.0mm, 6:6.67mm, 7:7.5mm, 8:6.7mm, 9:製品板厚 PlateThickness, ※6 P:製品分析 Product Analysis,
※7 N:焼準 Normalized, Q:焼入れ Quenched, T:焼戻し Tempered, CR:Controlled Rolled, NIC:NIC Process/TMC Process, CLC:CLC Process/TMC Process, AR:As Rolled, TMR:TMR Process/TMC Process, NR:Normalizing Rolled
SH:延性破面率 Shear Fracture, CF:脆性破面率 Crystallinity Fracture, LE:横膨出 Lateral Expansion, AGS:オーステナイト粒度 Austenite Grain Size, FGS:フェライト粒度 Ferrite Grain Size, SR:Stress Relieved/Post Weld Heat Treatment
温度 Temperature C: °C F: °F

上記注文品は御指定の規格または仕様に従って製造され、その要求事項を満足していることを証明します。

WE HEREBY CERTIFY THAT THE MATERIAL DESCRIBED HEREIN HAS BEEN MADE IN ACCORDANCE WITH THE RULES OF THE CONTRACT.

T. Adachi
君津製鐵所厚板管理グループリーダー
Head of Department
PLATE QUALITY CONTROL DEPT.
KIMITSU WORKS

AY4015609392

B

注文者 SHIPPER : HANWA CO., LTD.
注文者照合番号 REFERENCE No. : 228-68511040
契約番号 CONTRACT No. : 1-831-H1-5-X-AT01
商品名 COMMODITY : HOT ROLLED STEEL PLATES
規格 SPECIFICATION : ASME SA-516 GRADE 70-E10
文書番号 DOCUMENT No. :

**新日本製鐵株式會社
Nippon Steel Corporation**

鋼材検査証明書
INSPECTION CERTIFICATE

(AS PER EN 10204 CERTIFICATE ON MATERIAL TESTS 3.1)

需要家 CUSTOMER : EDMONTON EXCHANGER GROUP OF C-OMPANIES

本社 HEAD OFFICE : 〒100-8071 東京都千代田区丸の内二丁目6番1号 2-6-1, MARUNOUCHI, CHIYODA-KU, TOKYO 100-8071, JAPAN
君津製鐵所 KIMITSU WORKS : 〒299-1141 千葉県君津市君津1番地 1, KIMITSU, KIMITSU-CITY, CHIBA-PREF, 299-1141 JAPAN

証明書番号 CERTIFICATE No. : P-17645 PAGE : 30
発行年月日 DATE OF ISSUE : 2011-11-10
1001 2**DM*****
*****CEW**
需要家管理番号 CUSTOMER'S CONTROL No. : E3001P07Q1 E07

寸法 DIMENSION mm,″:inch,′:feet	員数 QUANTITY	質量 MASS KG	製鋼番号 CAST No. / 試験番号 TEST No.	製品番号 PLATE No.	LOCATION ORIENTATION ※1	GL ※2	引張試験 TENSILE TEST 耐力降伏点 YS 0.2% KSI	引張強さ TS KSI	伸び EL %	% ※3	BEND TEST RESULT ※4	LOCATION ORIENTATION ※1	衝撃試験 IMPACT TEST 2V-50F FT.LB 平均値 AVG	個々値 EACH	HBW	化学成分 CHEMICAL COMPOSITION % C ×100	Si ×100	Mn ×100	P ×1000	S ×1000	Cu ×100	Ni ×100	Cr ×100	Mo ×100	Nb ×100 ~×1000	V ×100 ~×1000	TAl ×100	Ceq.1 ×100	HEAT TREATMENT CONDITION OF SUPPLY ※7
																	N ~×1000	TE3 ~×1000	TE1 ×100		SN ~×100	CA ×10000	B ×10000	TI ×100		Pcm ×100	Sol.Al ×100	Ceq.2 ×100	
02			G1950											194	AVG	15	38	141	6	2	1	2	2	0	12	0	31	39	
0.375″X120.5″X480′	1	2790	61169	8747202541	TC	I	57	77	27			TL	197	198	157		33	2	5		0	12	2	0					
														200														
															P	15	38	141	5	2	1	1	1	0	11	0	39	
																	36		3		1	16	2	0					
02			G1950											194	AVG	15	38	141	6	2	1	2	2	0	12	0	31	39	
0.375″X120.5″X480′	1	2790	61169	8747202551	TC	I	57	77	27			TL	197	198	157		33	2	5		0	12	2	0					
														200														
															P	15	38	141	5	2	1	1	1	0	11	0	39	
																	36		3		1	16	2	0					
02			G1950	TESTED-PL										210	AVG	15	38	141	6	2	1	2	2	0	12	0	31	39	
0.375″X120.5″X480′	1	2790	61170	8747202331	TC	I	57	77	26			TL	199	189	156		33	2	5		0	12	2	0					
														198														
															P	15	38	141	5	2	1	1	1	0	11	0	39	
																	36		3		1	16	2	0					

注釈 NOTES ※1 Location:Orientation 位置・方向, T:頂部 Top, B:底部 Bottom, L:圧延方向 Longitudinal, C:直角方向 Transverse, Z:板厚方向 Through Thickness, R:45° 方向 45Deg. to the Longitudinal Axis
※2 GL 標点距離 Gage Length, A:50mm 平形試験片 Rectangular, B:50mm 丸形試験片 Round, C:70mm 平形試験片 Rectangular, D:70mm 丸形試験片 Round, E:80mm 平形試験片 Rectangular, F:80mm 丸形試験片 Round, G:200mm, H:2", I:8", J:5.65$\sqrt{So}$, K:4$\sqrt{So}$
※3 RA:絞り Reduction of Area, YR:降伏比 Yield Ratio, ※4 A:合格 Acceptable, ※5 F:標準寸法 FULL SIZE, 2:2.5mm, 3:3.3mm, 4:3.33mm, 5:5.0mm, 6:6.67mm, 7:7.5mm, 8:6.7mm, 9:製品板厚 PlateThickness, ※6 P:製品分析 Product Analysis, 温度 Temperature °C °F
※7 N:焼準 Normalized, Q:焼入れ Quenched, T:焼戻し Tempered, CR:Controlled Rolled, NIC:NIC Process/TMC Process, CLC:CLC Process/TMC Process, AR:As Rolled, TMR:TMR Process/TMC Process, NR:Normalizing Rolled
SH:延性破面率 Shear Fracture, CF:脆性破面率 Crystallinity Fracture, LE:横膨出 Lateral Expansion, AGS:オーステナイト粒度 Austenite Grain Size, FGS:フェライト粒度 Ferrite Grain Size, SR:Stress Relieved/Post Weld Heat Treatment

上記注文品は御指定の規格または仕様に従って製造され、その要求事項を満足していることを証明します。

WE HEREBY CERTIFY THAT THE MATERIAL DESCRIBED HEREIN HAS BEEN MADE IN ACCORDANCE WITH THE RULES OF THE CONTRACT.

T. Adachi
君津製鐵所厚板管理グループリーダー
Head of Department
PLATE QUALITY CONTROL DEPT.
KIMITSU WORKS

AX4015709392

B

**

新日本製鐵株式會社
Nippon Steel Corporation

本　　社 : 〒100-8071　東京都千代田区丸の内二丁目6番1号
HEAD OFFICE : 2-6-1, MARUNOUCHI, CHIYODA-KU, TOKYO 100-8071, JAPAN
君津製鐵所 : 〒299-1141　千葉県君津市君津１番地
KIMITSU WORKS : 1, KIMITSU, KIMITSU-CITY, CHIBA-PREF, 299-1141, JAPAN

鋼材検査証明書
INSPECTION CERTIFICATE

注　文　者 SHIPPER : HANWA CO., LTD.
注文者照合番号 REFERENCE No. : 228-68511040
契約番号 CONTRACT No. : 1-831-H1-5-X-AT01
商品名 COMMODITY : HOT ROLLED STEEL PLATES
規　　格 SPECIFICATION : ASME SA-516 GRADE 70-E10 (AS PER EN 10204 CERTIFICATE ON MATERIAL TESTS 3.1)
文書番号 DOCUMENT No. :
需要家 CUSTOMER : EDMONTON EXCHANGER GROUP OF C-OMPANIES
需要家管理番号 CUSTOMER'S CONTROL No. : E3001P07Q1 E07

証明書番号 CERTIFICATE No. : P-17645　頁 PAGE : 31
発行年月日 DATE OF ISSUE : 2011-11-10
1001　2**DM*****
*****CEW**

寸法 DIMENSION mm,':inch,':feet	員数 QUANTITY	質量 MASS KG	製鋼番号 CAST No. / 試験番号 TEST No.	製品番号 PLATE No.	LOCATION ORIENTATION GL ※1 ※2	引張試験 TENSILE TEST 耐力降伏点 YS 0.2% KSI	引張強さ TS KSI	伸び EL %	% ※3	BEND TEST 曲げ試験 上表	LOCATION ORIENTATION SIZE 上表 ※1	衝撃試験 IMPACT TEST 2V-50F FT.LB 平均値 AVG	個々値 EACH	HBW	化学成分 CHEMICAL COMPOSITION % C ×100	Si ×100	Mn ×100	P ×1000	S ×1000	Cu ×100	Ni ×100	Cr ×100	Mo ×100	Nb ×100	V ×100	Ti ×100	Ceq.1 ×100	表面状態 CONDITION OF SURFACE ※7
02			G1950										210	AVG	15	38	141	6	2	1	2	2	0	12	0	31	39	
0.375'X120.5'X480'	1	2790	61170	8747202341	TC	57	77	26		TL	7199		189	156		33	2	5		0	12	2	0				
													198														
														P	15	38	141	5	2	1	1	1	0	11	0		39	
																36		3		1	16	2	0				
02			G1950										210	AVG	15	38	141	6	2	1	2	2	0	12	0	31	39	
0.375'X120.5'X480'	1	2790	61170	8747202351	TC	57	77	26		TL	7199		189	156		33	2	5		0	12	2	0				
													198														
														P	15	38	141	5	2	1	1	1	0	11	0		39	
																36		3		1	16	2	0				
02			G1950										210	AVG	15	38	141	6	2	1	2	2	0	12	0	31	39	
0.375'X120.5'X480'	1	2790	61170	8747202361	TC	57	77	26		TL	7199		189	156		33	2	5		0	12	2	0				
													198														
														P	15	38	141	5	2	1	1	1	0	11	0		39	
																36		3		1	16	2	0				

注　釈 NOTES
※1 Location Orientation 位置・方向, T：頭部 Top, B：底部 Bottom, L：圧延方向 Longitudinal, C：直角方向 Transverse, Z：板厚方向 Through Thickness, R：45° 方向 45Deg. to the Longitudinal Axis
※2 GL 標点距離 Gage Length, A：50mm 平形試験片 Rectangular, B：50mm 丸形試験片 Round, C：70mm 平形試験片 Rectangular, D：70mm 丸形試験片 Round, E：80mm 平形試験片 Rectangular, F：80mm 丸形試験片 Round, G：200mm, H：2", I：8", J：5.65$\sqrt{So}$, K：4$\sqrt{So}$
※3 RA：絞り Reduction of Area, YR：降伏比 Yield Ratio, ※4 A：合格 Acceptable, ※5 F：標準寸法 FULL SIZE, 2：2.5mm, 3：3.3mm, 4：3.33mm, 5：5.0mm, 6：6.67mm, 7：7.5mm, 8：6.7mm, 9：製品板厚 PlateThickness, ※6 P：製品分析 Product Analysis,
※7 N：焼準 Normalized, Q：焼入れ Quenched, T：焼戻し Tempered, CR：Controlled Rolled, NIC：NIC Process/TMC Process, CLC：CLC Process/TMC Process, AR：As Rolled, TMR：TMR Process/TMC Process, NR：Normalizing Rolled
SH：延性破面率 Shear Fracture, CF：脆性破面率 Crystallinity Fracture, LE：横膨出 Lateral Expansion, AGS：オーステナイト粒度 Austenite Grain Size, FGS：フェライト粒度 Ferrite Grain Size, SR：Stress Relieved/Post Weld Heat Treatment
温度 Temperature C: °C F: °F

上記注文品は御指定の規格または仕様に従って製造され、その要求事項を満足していることを証明します。

WE HEREBY CERTIFY THAT THE MATERIAL DESCRIBED HEREIN HAS BEEN MADE IN ACCORDANCE WITH THE RULES OF THE CONTRACT.

JUN - 8 2012 Quality Department

J. Adachi

君津製鐵所厚板管理グループリーダー
Head of Department
PLATE QUALITY CONTROL DEPT.
KIMITSU WORKS

A4015809392

B

注文者 SHIPPER : HANWA CO., LTD.
注文者照合番号 REFERENCE No. : 228-68511040
契約番号 CONTRACT No. : 1-831-H1-5-X-AT01
商品名 COMMODITY : HOT ROLLED STEEL PLATES
規格 SPECIFICATION : ASME SA-516 GRADE 70-E10
文書番号 DOCUMENT No. :

**

新日本製鐵株式會社
Nippon Steel Corporation

鋼材検査証明書
INSPECTION CERTIFICATE

(AS PER EN 10204 CERTIFICATE ON MATERIAL TESTS 3.1)

需要家 CUSTOMER : EDMONTON EXCHANGER GROUP OF C-OMPANIES

本社 HEAD OFFICE : 〒100-8071 東京都千代田区丸の内二丁目6番1号 2-6-1, MARUNOUCHI, CHIYODA-KU, TOKYO 100-8071, JAPAN
君津製鐵所 KIMITSU WORKS : 〒299-1141 千葉県君津市君津 1 番地 1, KIMITSU, KIMITSU-CITY, CHIBA-PREF. 299-1141 JAPAN

証明書番号 CERTIFICATE No. : P-17645 PAGE 32
発行年月日 DATE OF ISSUE : 2011-11-10
1001 2**DM*****
*****CEW**
需要家管理番号 CUSTOMER'S CONTROL No. : E3001P07Q1 E07

寸法 DIMENSION mm, ":inch, ':feet	員数 QUANTITY	質量 MASS KG	製鋼番号 CAST No. / 試験番号 TEST No.	製品番号 PLATE No.	LOCATION ORIENTATION GL ※1	引張試験 TENSILE TEST 耐力降伏点 YS 0.2% KSI	引張強さ TS KSI	伸び EL %	% ※3	BEND TEST 曲げ試験	LOCATION ORIENTATION SIZE ※1	衝撃試験 IMPACT TEST 2V-50F FT.LB 平均値 AVG	個々値 EACH	HBW	化学成分 CHEMICAL COMPOSITION % C	Si	Mn	P	S	Cu	Ni	Cr	Mo	Nb	V	TAl	Ceq. I	供給状態 CONDITION OF SUPPLY
															×100 +1000	×100	×100	×1000	×1000	×100	×100	×100	×100	×100 +1000	×100 +1000	×100	×100
																N	TE3	TE1		SN	CA	B	TI		Pcm	Sol. Al	Ceq. 2	
															×1000	+4000	+1000	×100	×100	+100	×10000	×10000	×100		×100	×100	×100	※7
02 0.375"X120.5"X480"	1	2790	G1964 61434	8747202561	TCL	57	78	25		TL	7	200	208	AVG	16	38	143	8	2	2	1	2	0	12	036	40	
													197	159		33	2	5		0	12	0	0					
													194															
															P16	38	144	8	2	1	1	1	0	14	0	40	
																32		3		1	16	2	0					
02 0.375"X120.5"X480"	1	2790	G1964 61434	8747202571	TCL	57	78	25		TL	7	200	208	AVG	16	38	143	8	2	2	1	2	0	12	036	40	
													197	159		33	2	5		0	12	0	0					
													194															
															P16	38	144	8	2	1	1	1	0	14	0	40	
																32		3		1	16	2	0					
02 0.375"X120.5"X480"	1	2790	G1964 61434	8747202581	TCL	57	78	25		TL	7	200	208	AVG	16	38	143	8	2	2	1	2	0	12	036	40	
													197	159		33	2	5		0	12	0	0					
													194															
															P16	38	144	8	2	1	1	1	0	14	0	40	
																32		3		1	16	2	0					

注釈 NOTES
※1 Location Orientation 位置・方向, T:頭部 Top, B:底部 Bottom, L:圧延方向 Longitudinal, C:直角方向 Transverse, Z:板厚方向 Through Thickness, R:45° 方向 45Deg. to the Longitudinal Axis
※2 GL 標点距離 Gage Length, A:50mm 平形試験片 Rectangular, B:50mm 丸形試験片 Round, C:70mm 平形試験片 Rectangular, D:70mm 丸形試験片 Round, E:80mm 平形試験片 Rectangular, F:80mm 丸形試験片 Round, G:200mm, H:2", I:8", J:5.65$\sqrt{So}$, K:4$\sqrt{So}$
※3 RA:絞り Reduction of Area, YR:降伏比 Yield Ratio, ※4 A:合格 Acceptable, ※5 F:標準寸法 FULL SIZE, 2:2.5mm, 3:3.3mm, 4:3.33mm, 5:5.0mm, 6:6.67mm, 7:7.5mm, 8:6.7mm, 9:製品板厚 Plate Thickness, ※6 P:製品分析 Product Analysis,
※7 N:焼準 Normalized, Q:焼入れ Quenched, T:焼戻し Tempered, CR:Controlled Rolled, NIC:NIC Process/TMC Process, CLC:CLC Process/TMC Process, AR:As-Rolled, TMR:TMR Process/TMC Process, NR:Normalizing Rolled
SH:延性破面率 Shear Fracture, CF:脆性破面率 Crystallinity Fracture, LE:横膨出 Lateral Expansion, AGS:オーステナイト粒度 Austenite Grain Size, FGS:フェライト粒度 Ferrite Grain Size, SR:Stress Relieved/Post Weld Heat Treatment
温度 Temperature C: °C F: °F

上記注文品は御指定の規格または仕様に従って製造され、その要求事項を満足していることを証明します。

WE HEREBY CERTIFY THAT THE MATERIAL DESCRIBED HEREIN HAS BEEN MADE IN ACCORDANCE WITH THE RULES OF THE CONTRACT.

J. Adachi

君津製鐵所厚板管理グループリーダー
Head of Department
PLATE QUALITY CONTROL DEPT.
KIMITSU WORKS

AX4015905392

B

新日本製鐵株式會社
Nippon Steel Corporation

鋼材検査証明書
INSPECTION CERTIFICATE

本社 HEAD OFFICE : 〒100-8071 東京都千代田区丸の内二丁目6番1号 2-6-1, MARUNOUCHI, CHIYODA-KU, TOKYO 100-8071, JAPAN
君津製鐵所 KIMITSU WORKS : 〒299-1141 千葉県君津市君津1番地 1, KIMITSU, KIMITSU-CITY, CHIBA-PREF. 299-1141 JAPAN

注文者 SHIPPER : HANWA CO., LTD.
注文者照合番号 REFERENCE No. : 228-68511040
契約番号 CONTRACT No. : 1-831-H1-5-X-AT01
商品名 COMMODITY : HOT ROLLED STEEL PLATES
規格 SPECIFICATION : ASME SA-516 GRADE 70-E10 (AS PER EN 10204 CERTIFICATE ON MATERIAL TESTS 3.1)
文書番号 DOCUMENT No. :
需要家 CUSTOMER : EDMONTON EXCHANGER GROUP OF C-OMPANIES
需要家管理番号 CUSTOMER'S CONTROL No. :

証明書番号 CERTIFICATE No. : P-17645 頁 PAGE : 33
発行年月日 DATE OF ISSUE : 2011-11-10
1001 2**DM***** *****CEW** E3001P07Q1 E07

寸法 DIMENSION mm,":inch,':feet	員数 QUANTITY	質量 MASS KG	製鋼番号 CAST No. / 試験番号 TEST No.	製品番号 PLATE No.	LOCATION ORIENTATION GL ※1	引張試験 TENSILE TEST 耐力降伏点 YS 0.2% KSI	引張強さ TS KSI	伸び EL %	% ※3	BEND TEST 合否	LOCATION ORIENTATION ※1	SIZE ※4	衝撃試験 IMPACT TEST 2V-50F FT.LB 平均値 AVG	個々値 EACH	HBW	化学成分 CHEMICAL COMPOSITION % C	Si	Mn	P	S	Cu	Ni	Cr	Mo	Nb	V	TAl	Ceq.1	熱処理 CONDITION OF HEAT TREATMENT ※7
02			G2106	TESTED-PL										188	AVG	15	37	146	7	2	1	1	1	0	1	1	0	32	40	
0.375"X120.5"X480"	1	2790	64708	8747202601	TC	56	77	26			TL	7	200	201	157		43	1	3		0	8	2	0					
														210															
																P16	38	148	8	2	1	1	1	0	1	2	0		41	
																	46		3		1	7	3	0					
02			G1682	TESTED-PL										198	AVG	16	38	145	8	2	1	1	1	0	1	2	0	33	40	
0.375"X120.5"X480"	1	2790	65375	8747202611	TC	57	77	27			TL	7	209	215	156		31	1	3		0	10	0	0					
														215															
																P15	38	146	7	2	1	1	1	0	1	1	0		40	
																	34		3		1	10	2	0					
02			G1682											198	AVG	16	38	145	8	2	1	1	1	0	1	2	0	33	40	
0.375"X120.5"X480"	1	2790	65375	8747202621	TC	57	77	27			TL	7	209	215	156		31	1	3		0	10	0	0					
														215															
																P15	38	146	7	2	1	1	1	0	1	1	0		40	
																	34		3		1	10	2	0					

注釈 NOTES
※1 Location Orientation 位置・方向, T:頂部 Top, B:底部 Bottom, L:圧延方向 Longitudinal, C:直角方向 Transverse, Z:板厚方向 Through Thickness, R:45° 方向 45Deg. to the Longitudinal Axis
※2 GL 標点距離 Gage Length, A: 50mm 平形試験片 Rectangular, B: 50mm 丸形試験片 Round, C: 70mm 平形試験片 Rectangular, D: 70mm 丸形試験片 Round, E: 80mm 平形試験片 Rectangular, F: 80mm 丸形試験片 Round, G: 200mm, H: 2", I: 8", J: $5.65\sqrt{So}$, K: $4\sqrt{So}$
※3 RA: 絞り Reduction of Area, YR: 降伏比 Yield Ratio, ※4 A: 合格 Acceptable, ※5 F: 標準寸法 FULL SIZE, 2: 2.5mm, 3: 3.33mm, 4: 3.33mm, 5: 5.0mm, 6: 6.67mm, 7: 7.5mm, 8: 6.7mm, 9: 製品板厚 Plate Thickness, ※6 P: 製品分析 Product Analysis,
※7 N: 焼準 Normalized, Q: 焼入れ Quenched, T: 焼戻し Tempered, CR: Controlled Rolled, NIC: NIC Process/TMC Process, CLC: CLC Process/TMC Process, AR: As Rolled, TMR: TMR Process/TMC Process, NR: Normalizing Rolled
SH: 延性破面率 Shear Fracture, CF: 脆性破面率 Crystallinity Fracture, LE: 横膨出 Lateral Expansion, AGS: オーステナイト粒度 Austenite Grain Size, FGS: フェライト粒度 Ferrite Grain Size, SR: Stress Relieved/Post Weld Heat Treatment
温度 Temperature °C °F

上記注文品は御指定の規格または仕様に従って製造され、その要求事項を満足していることを証明します。

WE HEREBY CERTIFY THAT THE MATERIAL DESCRIBED HEREIN HAS BEEN MADE IN ACCORDANCE WITH THE RULES OF THE CONTRACT.

J. Adachi
君津製鐵所厚板管理グループリーダー
Head of Department
PLATE QUALITY CONTROL DEPT.
KIMITSU WORKS

AY4016009392

B

新日本製鐵株式會社
Nippon Steel Corporation

鋼材検査証明書
INSPECTION CERTIFICATE

本社 HEAD OFFICE : 〒100-8071 東京都千代田区丸の内二丁目6番1号 2-6-1, MARUNOUCHI, CHIYODA-KU, TOKYO 100-8071, JAPAN
君津製鐵所 KIMITSU WORKS : 〒299-1141 千葉県君津市君津1番地 1, KIMITSU, KIMITSU-CITY, CHIBA-PREF. 299-1141 JAPAN

注文者 SHIPPER : HANWA CO., LTD.
注文者照合番号 REFERENCE No. : 228-68511040
契約番号 CONTRACT No. : 1-831-H1-5-X-AT01
商品名 COMMODITY : HOT ROLLED STEEL PLATES
規格 SPECIFICATION : ASME SA-516 GRADE 70-E10 (AS PER EN 10204 CERTIFICATE ON MATERIAL TESTS 3.1)
文書番号 DOCUMENT No. :
需要家 CUSTOMER : EDMONTON EXCHANGER GROUP OF C-OMPANIES
需要家管理番号 CUSTOMER'S CONTROL No. :

証明書番号 CERTIFICATE No. : P-17645 頁 PAGE 126
発行年月日 DATE OF ISSUE : 2011-11-10
1001 2**DM*****
*****CEW**
E3001P07Q1 E07

寸法 DIMENSION mm,":inch,':feet	員数 QUANTITY	質量 MASS KG	製鋼番号 CAST No. / 試験番号 TEST No.	製品番号 PLATE No.	LOCATION ORIENTATION ※1	GL ※2	引張試験 TENSILE TEST 耐力降伏点 YS 0.2% KSI	引張強さ TS KSI	伸び EL %	% ※3	BEND TEST ※4	LOCATION ORIENTATION ※1	SIZE ※5	衝撃試験 IMPACT TEST 2V-50F FT.LB 平均値 AVG	個々値 EACH	HBW	化学成分 CHEMICAL COMPOSITION % C ×100	Si ×100	Mn ×100	P ×1000	S ×1000	Cu ×100	Ni ×100	Cr ×100	Mo ×100	Nb ×100	V ×100	TAl ×100	Ceq.1 ×100	CONDITION OF SUPPLY ※7
																		N ×1000	TE3 ×100	TE1 ×100		SN ×100	CA ×10000	B ×10000	TI ×100		Pcm ×100	Sol.Al ×100	Ceq.2 ×100	
20			G1846												273	AVG	16	37	142	7	2	1	1	1	0	12	0	29	40	
0.5"X120.5"X480"	1	3721	60303	8747220531	TC	1	56	78	26			TL	F	278	285	158		38	1	3	0	8	1	0					
															276														
																	P16	38	145	7	2	1	1	1	0	12	0		40	
																		39		3		1	13	2	0					
20			G1682	TESTED-PL											287	AVG	16	38	145	8	2	1	1	1	0	12	0	33	40	
0.5"X120.5"X480"	1	3721	60954	8747220581	TC	1	54	77	25			TL	F	278	270	156		31	1	3	0	10	0	0					
															276														
																	P15	38	146	8	2	1	1	1	0	14	0		40	
																		34		3		1	12	2	0					
TOTAL	430	2006746																											
				HEAT TREATMENT. PLATE & TEST SPECIMEN NORMALIZING : 910C X 10MIN.																										
				CHARPY IMPACT TEST TEMPERATURE (SI) : - 46C																										
				LADLE CEQ1 = C+MN/6+(NI+CU)/15+(CR+MO+V)/5																										
				PRODUCT CEQ1 = C+MN/6+(NI+CU)/15+(CR+MO+V)/5																										
				LADLE TE1 = CU+NI+CR+MO																										
				LADLE TE3 = CR+MO																										
				PRODUCT TE1 = CU+NI+CR+MO																										

注釈 NOTES
※1 Location Orientation 位置・方向, T:頭部 Top, B:底部 Bottom, L:圧延方向 Longitudinal, C:直角方向 Transverse, Z:板厚方向 Through Thickness, R:45° 方向 45Deg. to the Longitudinal Axis
※2 GL 標点距離 Gage Length, A:50mm 平形試験片 Rectangular, B:50mm 丸形試験片 Round, C:70mm 平形試験片 Rectangular, D:70mm 丸形試験片 Round, E:80mm 平形試験片 Rectangular, F:80mm 丸形試験片 Round, G:200mm, H:2", I:8", J:5.65$\sqrt{So}$, K:4$\sqrt{So}$
※3 RA:絞り Reduction of Area, YR:降伏比 Yield Ratio, ※4 A:合格 Acceptable, ※5 F:標準寸法 FULL SIZE, 2:2.5mm, 3:3.3mm, 4:3.33mm, 5:5.0mm, 6:6.67mm, 7:7.5mm, 8:6.7mm, 9:製品板厚 PlateThickness, ※6 P:製品分析 Product Analysis,
※7 N:焼準 Normalized, Q:焼入れ Quenched, T:焼戻し Tempered, CR:Controlled Rolled, NIC:NIC Process/TMC Process, CLC:CLC Process/TMC Process, AR:As Rolled, TMR:TMR Process/TMC Process, NR:Normalizing Rolled
SH:延性破面率 Shear Fracture, CF:脆性破面率 Crystallinity Fracture, LE:横膨出 Lateral Expansion, AGS:オーステナイト粒度 Austenite Grain Size, FGS:フェライト粒度 Ferrite Grain Size, SR:Stress Relieved/Post Weld Heat Treatment
温度 Temperature C:□□□°C F:□□□°F

上記注文品は御指定の規格または仕様に従って製造され、その要求事項を満足していることを証明します。

WE HEREBY CERTIFY THAT THE MATERIAL DESCRIBED HEREIN HAS BEEN MADE IN ACCORDANCE WITH THE RULES OF THE CONTRACT.

T. Adachi
君津製鐵所厚板管理グループリーダー
Head of Department
PLATE QUALITY CONTROL DEPT.
KIMITSU WORKS

AY4012603992

B

新日本製鐵株式會社
Nippon Steel Corporation

鋼材検査証明書
INSPECTION CERTIFICATE

本社 HEAD OFFICE : 〒100-8071 東京都千代田区丸の内二丁目6番1号 2-6-1, MARUNOUCHI, CHIYODA-KU, TOKYO 100-8071, JAPAN
君津製鐵所 KIMITSU WORKS : 〒299-1141 千葉県君津市君津1番地 1, KIMITSU, KIMITSU-CITY, CHIBA-PREF, 299-1141 JAPAN

注文者 SHIPPER : HANWA CO., LTD.
注文者照合番号 REFERENCE No. : 228-68511040
契約番号 CONTRACT No. : 1-831-H1-5-X-AT01
商品名 COMMODITY : HOT ROLLED STEEL PLATES
規格 SPECIFICATION : ASME SA-516 GRADE 70-E10 (AS PER EN 10204 CERTIFICATE ON MATERIAL TESTS 3.1)
文書番号 DOCUMENT No. :
需要家 CUSTOMER : EDMONTON EXCHANGER GROUP OF C-OMPANIES
需要家管理番号 CUSTOMER'S CONTROL No. :

証明書番号 CERTIFICATE No. : P-17645
頁 PAGE : 127E
発行年月日 DATE OF ISSUE : 2011-11-10
1001
2**DM*****
*****CEW**
E3001P07Q1 E07

寸法 DIMENSION mm, ": inch, ': feet	員数 QUANTITY	質量 MASS KG	製鋼番号 CAST No. / 試験番号 TEST No.	製品番号 PLATE No.	LOCATION ORIENTATION ※1	GL ※2	引張試験 TENSILE TEST 耐力降伏点 YS 0.2% KSI	引張強さ TS	伸び EL %	% ※3	BEND TEST DIAMETER ※4	LOCATION ORIENTATION ※1	SIZE ※5	衝撃試験 IMPACT TEST 2V-50F FT.LB 平均値 AVG	個々値 EACH	HBW
				CHEMICAL COMPOSITION % : "N" X10000												
				CHEMICAL COMPOSITION % : "SN" X1000												
				CHEMICAL COMPOSITION % : "TE3" X100												
				LADLE TREATMENT : VACUUM DEGASSED												
				SULPHIDE SHAPE CONTROL												

化学成分 CHEMICAL COMPOSITION %

C ×100 ~×1000	Si ×100	Mn ×100	P ×10000	S ×1000	Cu ×100	Ni ×100	Cr ×100	Mo ×100	Nb ~×100 ~×1000	V ×100 ~×1000	TAl ×100	Ceq.1 ×100	熱処理状態 CONDITION OF SUPPLY
※6 ×1000	N ~×1000	TE3 ~×1000	TE1 ×100	×100	SN ×100	CA ×10000	B ×10000	TI ×100	Pcm ×100	Sol. Al ×100	Ceq.2 ×100	※7	

MTR APPROVED EDMONTON EXCHANGER

注釈 NOTES
※1 Location Orientation 位置・方向, T:頭部 Top, B:底部 Bottom, L:圧延方向 Longitudinal, C:直角方向 Transverse, Z:板厚方向 Through Thickness, R:45° 方向 45Deg. to the Longitudinal Axis
※2 GL 標点距離 Gage Length, A:50mm 平形試験片 Rectangular, B:50mm 丸形試験片 Round, C:70mm 平形試験片 Rectangular, D:70mm 丸形試験片 Round, E:80mm 平形試験片 Rectangular, F:80mm 丸形試験片 Round, G:200mm, H:2", I:8", J:5.65$\sqrt{So}$, K:4.$\sqrt{So}$
※3 RA:絞り Reduction of Area, YR:降伏比 Yield Ratio, ※4 A:合格 Acceptable, ※5 F:標準寸法 FULL SIZE, 2:2.5mm, 3:3.3mm, 4:3.33mm, 5:5.0mm, 6:6.67mm, 7:7.5mm, 8:6.7mm, 9:製品板厚 PlateThickness, ※6 P:製品分析 Product Analysis,
※7 N:焼準 Normalized, Q:焼入れ Quenched, T:焼戻し Tempered, CR:Controlled Rolled, NIC:NIC Process/TMC Process, CLC:CLC Process/TMC Process, AR:As Rolled, TMR:TMR Process/TMC Process, NR:Normalizing Rolled
SH:延性破面率 Shear Fracture, CF:脆性破面率 Crystallinity Fracture, LE:横膨出 Lateral Expansion, AGS:オーステナイト粒度 Austenite Grain Size, FGS:フェライト粒度 Ferrite Grain Size, S.R:Stress Relieved/Post Weld Heat Treatment
温度 Temperature C: °C F: °F

上記注文品は御指定の規格または仕様に従って製造され、その要求事項を満足していることを証明します。

WE HEREBY CERTIFY THAT THE MATERIAL DESCRIBED HEREIN HAS BEEN MADE IN ACCORDANCE WITH THE RULES OF THE CONTRACT.

T. Adachi
君津製鐵所厚板管理グループリーダー
Head of Department
PLATE QUALITY CONTROL DEPT.
KIMITSU WORKS

AX401270939Z

B

注文者 SHIPPER : HANWA CO., LTD.
注文者照合番号 REFERENCE No. : 228410-685211000
契約番号 CONTRACT No. : 3-811-H1-5-3-AT01
商品名 COMMODITY : HOT ROLLED STEEL PLATES
規格 SPECIFICATION : ASME SA-516 GRADE 70-E10-A11 (AS PER EN 10204 CERTIFICATE ON MATERIAL TESTS 3.1)
文書番号 DOCUMENT No. :
需要家 CUSTOMER : EDMONTON EXCHANGER GROUP OF C-OMPANIES
需要家管理番号 CUSTOMER'S CONTROL No. : E10911-J1010ER E3001A02Q0 E05

新日鐵住金株式会社
NIPPON STEEL & SUMITOMO METAL CORPORATION

鋼材検査証明書
INSPECTION CERTIFICATE

本社 HEAD OFFICE : 〒100-8071 東京都千代田区丸の内二丁目6番1号 2-6-1, MARUNOUCHI, CHIYODA-KU, TOKYO 100-8071, JAPAN
君津製鐵所 KIMITSU WORKS : 〒299-1141 千葉県君津市君津1番地 1, KIMITSU, KIMITSU-CITY, CHIBA-PREF. 299-1141 JAPAN

証明書番号 CERTIFICATE No. : P-22373
頁 PAGE : 23
発行年月日 DATE OF ISSUE : 2013-03-25
1001 2**DM*****
*****CEW**

寸法 DIMENSION mm,':inch,':feet	員数 QUANTITY	質量 MASS KG	製鋼番号 CAST No. / 試験番号 TEST No.	製品番号 PLATE No.	LOCATION ORIENTATION ※1	GL ※2	引張試験 TENSILE TEST 耐力降伏点 YS 0.2% KSI	引張強さ TS KSI	伸び EL %	% ※3	BEND TEST 曲げ試験	LOCATION ORIENTATION ※1	SIZE ※2	衝撃試験 IMPACT TEST 2V-50F FT.LB 平均値 AVG	個々値 EACH	HBW	化学成分 CHEMICAL COMPOSITION % C ×100	Si ×100	Mn ×100	P ×1000	S ×1000	Cu ×100	Ni ×100	Cr ×100	Mo ×100	Nb ×100 ~1000	V ×100 ~1000	Ti ×100	Ceq. 1 ×100	製造状態 CONDITION OF SUPPLY ※7
																		N ×1000	TE3 ~600~	TE1 ~1000~	Pcm ×100	Sol. Al ×100	CA ×10000	B ×10000	Ti ×100		Ceq. 2 ×100	
03			G8267	TESTED-PL											227													
0.500'X120.5'X480'	1	3721	04821	270020305	TC	I	55	77	28			TL	F	233	227	AVG	16	38	144	8	2	1	2	2	0	12	0	34	41	
															244	157		25	2	5			17	1	0					
																	P16	39	143	8	2	1	2	2	0	13	0		40	
																		27		5			22	1	0					
03			G8267	FROM											227													
0.500'X120.5'X480'	3	11163	04821	270020306	TC	I	55	77	28			TL	F	233	227	AVG	16	38	144	8	2	1	2	2	0	12	0	34	41	
				TO											244	157		25	2	5			17	1	0					
				270020308													P16	39	143	8	2	1	2	2	0	13	0		40	
																		27		5			22	1	0					
04			G7788	TESTED-PL											265													
0.625'X96.5'X480'	1	3726	01860	270020401	TC	I	54	76	28			TL	F	219	133	AVG	16	37	145	10	2	1	1	2	0	11	0	25	41	
															258	153		24	2	4			18	0	0					
																	P15	38	143	9	2	1	1	1	0	11	0		39	
																		27		3			23	2	0					

注釈 NOTES
※1 Location Orientation 位置・方向, T:頂部 Top, B:底部 Bottom, L:圧延方向 Longitudinal, C:直角方向 Transverse, Z:板厚方向 Through Thickness, R:45° 方向 45Deg. to the Longitudinal Axis
※2 GL 標点距離 Gage Length, A:50mm 平形試験片 Rectangular, B:50mm 丸形試験片 Round, C:70mm 平形試験片 Rectangular, D:70mm 丸形試験片 Round, E:80mm 平形試験片 Rectangular, F:80mm 丸形試験片 Round, G:200mm, H:2", I:8", J:5.65$\sqrt{So}$, K:4$\sqrt{So}$
※3 RA:絞り Reduction of Area, YR:降伏比 Yield Ratio, ※4 A:合格 Acceptable, ※5 F:標準寸法 FULL SIZE, 2:2.5mm, 3:3.33mm, 4:3.33mm, 5:5.0mm, 6:6.67mm, 7:7.5mm, 8:6.7mm, 9:製品板厚 PlateThickness, ※6 P:製品分析 Product Analysis, 温度 Temperature C: °C F: °F
※7 N:焼準 Normalized, Q:焼入れ Quenched, T:焼戻し Tempered, CR:Controlled Rolled, NIC:NIC Process/TMC Process, CLC:CLC Process/TMC Process, AR:As Rolled, TMR:TMR Process/TMC Process, NR:Normalizing Rolled
SH:延性破面率 Shear Fracture, CF:脆性破面率 Crystallinity Fracture, LE:横膨出 Lateral Expansion, AGS:オーステナイト粒度 Austenite Grain Size, FGS:フェライト粒度 Ferrite Grain Size, SR:Stress Relieved/Post Weld Heat Treatment

上記注文品は御指定の規格または仕様に従って製造され、その要求事項を満足していることを証明します。

WE HEREBY CERTIFY THAT THE MATERIAL DESCRIBED HEREIN HAS BEEN MADE IN ACCORDANCE WITH THE RULES OF THE CONTRACT.

17695

T. Adachi
君津製鐵所 品質保証室長
HEAD OF DEPARTMENT
QUALITY ASSURANCE DEPT.
KIMITSU WORKS

AY4002302512

B

注文者 SHIPPER : HANWA CO., LTD.
注文者照合番号 REFERENCE No. : 228410-685211000
契約番号 CONTRACT No. : 3-811-H1-5-3-AT01
商品名 COMMODITY : HOT ROLLED STEEL PLATES
規格 SPECIFICATION : ASME SA-516 GRADE 70-E10-A11
文書番号 DOCUMENT No. :
需要家 CUSTOMER : EDMONTON EXCHANGER GROUP OF C-OMPANIES

新日鐵住金株式会社
NIPPON STEEL & SUMITOMO METAL CORPORATION

鋼材検査証明書
INSPECTION CERTIFICATE

(AS PER EN 10204 CERTIFICATE ON MATERIAL TESTS 3.1)

本社 HEAD OFFICE : 〒100-8071 東京都千代田区丸の内二丁目6番1号 2-6-1, MARUNOUCHI, CHIYODA-KU, TOKYO 100-8071, JAPAN
君津製鐵所 KIMITSU WORKS : 〒299-1141 千葉県君津市君津1番地 1, KIMITSU, KIMITSU-CITY, CHIBA-PREF. 299-1141 JAPAN

証明書番号 CERTIFICATE No. : P-22373
頁 PAGE : 24
発行年月日 DATE OF ISSUE : 2013-03-25
1001 2**DM*****
*****CEW**
需要家管理番号 CUSTOMER'S CONTROL No. : E10911-J1010ER E3001A02Q0 E05

寸法 DIMENSION mm,":inch,':feet	員数 QUANTITY	質量 MASS KG	製鋼番号 CAST No. / 試験番号 TEST No.	製品番号 PLATE No.	LOCATION ORIENTATION ※1	GL ※2	引張試験 TENSILE TEST 耐力降伏点 YS YP 0.2% KSI	引張強さ TS KSI	伸び EL %	% ※3	BEND TEST 曲げ試験 ※4	LOCATION ORIENTATION ※1	SIZE ※5	衝撃試験 IMPACT TEST 2V-50F FT.LB 平均値 AVG	個々値 EACH	HBW	C ×100	Si ×100	Mn ×100	P ×1000	S ×1000	Cu ×100	Ni ×100	Cr ×100	Mo ×100	Nb ×100	V ×100	Ti ×100	Ceq.1 ×100	熱処理 CONDITION OF SUPPLY ※7
04			G7788	FROM											265	AVG	16	37	145	10	2	1	1	2	0	11	0	25	41	
0.625"X96.5"X480"	2	7452	01860	270020402 TO 270020403	TC	1	54	76	28			TL	F	219	133	153		24	2	4			18	0	0					
															258															
																P	15	38	143	9	2	1	1	1	0	11	0		39	
																		27		3			23	2	0					
04			G8265	TESTED-PL											231	AVG	16	37	146	8	3	1	2	2	0	12	0	33	41	
0.625"X96.5"X480"	1	3726	04764	270020404	TC	1	55	77	28			TL	F	223	196	153		28	2	5			17	1	0					
															242															
																P	16	38	148	8	3	1	2	2	0	12	0		41	
																		29		5			20	2	0					
04			G8271	TESTED-PL											156	AVG	16	37	142	11	2	1	2	2	0	11	0	32	40	
0.625"X96.5"X480"	1	3726	04857	270020413	TC	1	55	77	28			TL	F	188	161	155		33	2	5			17	0	0					
															248															
																P	16	38	142	11	2	1	2	2	0	12	0		40	
																		31		5			22	2	0					

注釈 NOTES
※1 Location Orientation 位置・方向, T:頂部 Top, B:底部 Bottom, L:圧延方向 Longitudinal, C:直角方向 Transverse, Z:板厚方向 Through Thickness, R:45° 方向 45Deg. to the Longitudinal Axis
※2 GL 標点距離 Gage Length, A:50mm 平形試験片 Rectangular, B:50mm 丸形試験片 Round, C:70mm 平形試験片 Rectangular, D:70mm 丸形試験片 Round, E:80mm 平形試験片 Rectangular, F:80mm 丸形試験片 Round, G:200mm, H:2", I:8", J:5.65$\sqrt{So}$, K:4$\sqrt{So}$
※3 RA:絞り Reduction of Area, YR:降伏比 Yield Ratio, ※4 A:合格 Acceptable, ※5 F:標準・指 FULL SIZE, 2:2.5mm, 3:3.3mm, 4:3.33mm, 5:5.0mm, 6:6.67mm, 7:7.5mm, 8:6.7mm, 9:製品板厚 PlateThickness, ※6 P:製品分析 Product Analysis,
※7 N:焼準 Normalized, Q:焼入れ Quenched, T:焼戻し Tempered, CR:Controlled Rolled, NIC:NIC Process/TMC Process, CLC:CLC Process/TMC Process, AR:As Rolled, TMR:TMR Process/TMC Process, NR:Normalizing Rolled
SH:延性破面率 Shear Fracture, CF:脆性破面率 Crystallinity Fracture, LE:横膨出 Lateral Expansion, AGS:オーステナイト粒度 Austenite Grain Size, FGS:フェライト粒度 Ferrite Grain Size, SR:Stress Relieved/Post Weld Heat Treatment
温度 Temperature C: F:

上記注文品は御指定の規格または仕様に従って製造され、その要求事項を満足していることを証明します。

WE HEREBY CERTIFY THAT THE MATERIAL DESCRIBED HEREIN HAS BEEN MADE IN ACCORDANCE WITH THE RULES OF THE CONTRACT.

T. Adachi
君津製鐵所 品質保証室長
HEAD OF DEPARTMENT
QUALITY ASSURANCE DEPT.
KIMITSU WORKS

AY400240251Z

B

注文者 SHIPPER : HANWA CO., LTD.
注文者照合番号 REFERENCE No. : 228410-685211000
契約番号 CONTRACT No. : 3-811-H1-5-3-AT01
商品名 COMMODITY : HOT ROLLED STEEL PLATES
規格 SPECIFICATION : ASME SA-516 GRADE 70-E10-A11
文書番号 DOCUMENT No. :
需要家 CUSTOMER : EDMONTON EXCHANGER GROUP OF COMPANIES

新日鐵住金株式会社
NIPPON STEEL & SUMITOMO METAL CORPORATION

鋼材検査証明書
INSPECTION CERTIFICATE

(AS PER EN 10204 CERTIFICATE ON MATERIAL TESTS 3.1)

本社 HEAD OFFICE : 〒100-8071 東京都千代田区丸の内二丁目6番1号 2-6-1, MARUNOUCHI, CHIYODA-KU, TOKYO 100-8071, JAPAN
君津製鐵所 KIMITSU WORKS : 〒299-1141 千葉県君津市君津1番地 1, KIMITSU, KIMITSU-CITY, CHIBA-PREF, 299-1141 JAPAN

証明書番号 CERTIFICATE No. : P-22373
頁 PAGE : 25
発行年月日 DATE OF ISSUE : 2013-03-25
1001
需要家管理番号 CUSTOMER'S CONTROL No. : E10911-J1010ER E3001A02Q0 E05
2**DM*****
*****CEW**

寸法 DIMENSION mm,":inch,':feet	員数 QUANTITY	質量 MASS KG	製鋼番号 CAST No. / 試験番号 TEST No.	製品番号 PLATE No.	LOCATION ORIENTATION	GL	引張試験 TENSILE TEST 耐力降伏点 YS 0.2% KSI	引張強さ TS KSI	伸び EL %	%	BEND TEST 曲げ試験	LOCATION ORIENTATION	SIZE	衝撃試験 IMPACT TEST 2V-50F FT.LB 平均値 AVG	個々値 EACH	HBW	化学成分 CHEMICAL COMPOSITION % C	Si	Mn	P	S	Cu	Ni	Cr	Mo	Nb	V	TAl	Ceq.1	熱処理状態 CONDITION OF SUPPLY
04			G8271	FROM											156	AVG	16	37	142	11	2	1	2	2	0	11	0	32	40	
0.625"X96.5"X480"	3	11178	04857	270020414	TC	1	55	77	28			TL	F188		161	155		33	2	5			17	0	0					
				TO											248															
				270020416													P16	38	142	11	2	1	2	2	0	12	0		40	
																		31		5			22	2	0					
04			G8271	TESTED-PL											233	AVG	16	37	142	11	2	1	2	2	0	11	0	32	40	
0.625"X96.5"X480"	1	3726	04859	270020405	TC	1	55	77	27			TL	F231		237	155		33	2	5			17	0	0					
															222															
																	P16	38	142	11	2	1	2	2	0	12	0		40	
																		31		5			22	2	0					
04			G8271	FROM											233	AVG	16	37	142	11	2	1	2	2	0	11	0	32	40	
0.625"X96.5"X480"	3	11178	04859	270020406	TC	1	55	77	27			TL	F231		237	155		33	2	5			17	0	0					
				TO											222															
				270020408													P16	38	142	11	2	1	2	2	0	12	0		40	
																		31		5			22	2	0					

注釈 NOTES
※1 Location Orientation 位置・方向, T:頂部 Top, B:底部 Bottom, L:圧延方向 Longitudinal, C:直角方向 Transverse, Z:板厚方向 Through Thickness, R:45° 方向 45Deg. to the Longitudinal Axis
※2 GL 標点距離 Gage Length, A:50mm 平形試験片 Rectangular, B:50mm 丸形試験片 Round, C:70mm 平形試験片 Rectangular, D:70mm 丸形試験片 Round, E:80mm 平形試験片 Rectangular, F:80mm 丸形試験片 Round, G:200mm, H:2", I:8", J:5.65$\sqrt{So}$, K:4$\sqrt{So}$
※3 RA:絞り Reduction of Area, YR:降伏比 Yield Ratio, ※4 A:合格 Acceptable, ※5 F:標準寸法 FULL SIZE, 2:2.5mm, 3:3.3mm, 4:3.33mm, 5:5.0mm, 6:6.67mm, 7:7.5mm, 8:6.7mm, 9:製品板厚 PlateThickness, ※6 P:製品分析 Product Analysis,
※7 N:焼準 Normalized, Q:焼入れ Quenched, T:焼戻し Tempered, CR:Controlled Rolled, NIC:NIC Process/TMC Process, CLC:CLC Process/TMC Process, AR:As Rolled, TMR:TMR Process/TMC Process, NR:Normalizing Rolled
SH:延性破面率 Shear Fracture, CF:脆性破面率 Crystallinity Fracture, LE:横膨出 Lateral Expansion, AGS:オーステナイト粒度 Austenite Grain Size, FGS:フェライト粒度 Ferrite Grain Size, SR:Stress Relieved/Post Weld Heat Treatment
温度 Temperature C / F

上記注文品は御指定の規格または仕様に従って製造され、その要求事項を満足していることを証明します。

WE HEREBY CERTIFY THAT THE MATERIAL DESCRIBED HEREIN HAS BEEN MADE IN ACCORDANCE WITH THE RULES OF THE CONTRACT.

Process Equipment Inc. JUN 10 2013 Quality Department

J. Adachi

君津製鐵所 品質保証室長
HEAD OF DEPARTMENT
QUALITY ASSURANCE DEPT.
KIMITSU WORKS

AY4002502512

B

注文者 SHIPPER : HANWA CO., LTD.
注文者照合番号 REFERENCE No. : 228410-685211000
契約番号 CONTRACT No. : 3-811-H1-5-3-AT01
商品名 COMMODITY : HOT ROLLED STEEL PLATES
規格 SPECIFICATION : ASME SA-516 GRADE 70-E10-A11
文書番号 DOCUMENT No. :
需要家 CUSTOMER : EDMONTON EXCHANGER GROUP OF C-OMPANIES

新日鐵住金株式会社
NIPPON STEEL & SUMITOMO METAL CORPORATION

鋼材検査証明書
INSPECTION CERTIFICATE

(AS PER EN 10204 CERTIFICATE ON MATERIAL TESTS 3.1)

本社 HEAD OFFICE : 〒100-8071 東京都千代田区丸の内二丁目6番1号 2-6-1, MARUNOUCHI, CHIYODA-KU, TOKYO 100-8071, JAPAN
君津製鐵所 KIMITSU WORKS : 〒299-1141 千葉県君津市君津1番地 1, KIMITSU, KIMITSU-CITY, CHIBA-PREF. 299-1141 JAPAN

証明書番号 CERTIFICATE No. : P-22373 頁 PAGE : 26
発行年月日 DATE OF ISSUE : 2013-03-25
1001 2**DM*****
*****CEW**
需要家管理番号 CUSTOMER'S CONTROL No. : E10911-J101DER E3001A02Q0 E05

寸法 DIMENSION mm,':inch,':feet	員数 QUANTITY	質量 MASS KG	製鋼番号 CAST No. / 試験番号 TEST No.	製品番号 PLATE No.	LOCATION ORIENTATION GL ※1	引張試験 TENSILE TEST 耐力降伏点 YS 0.2% KSI	引張強さ TS KSI	伸び EL %	% ※3	BEND TEST 試験片	LOCATION ORIENTATION ※1	SIZE ※5	衝撃試験 IMPACT TEST 2V-50F FT.LB 平均値 AVG	個々値 EACH	HBW	化学成分 CHEMICAL COMPOSITION % C ×100	Si ×100	Mn ×100	P ×1000	S ×1000	Cu ×100	Ni ×100	Cr ×100	Mo ×100	Nb ×100	V ×100	TAl ×100	Ceq.1 ×100	CONDITION OF SUPPLY ※7
04			G8271	TESTED-PL										250	AVG	16	37	142	11	2	1	2	2	0	1	0	32	40	
0.625"X96.5"X480"	1	3726	04865	270020409	TC	54	77	28		TL	F	243	240	155		33	2	5			17	0	0	1				
													239															
															P	16	38	142	11	2	1	2	2	0	2	0		40
																	31		5			22	2	0				
04			G8271	FROM										250	AVG	16	37	142	11	2	1	2	2	0	1	0	32	40	
0.625"X96.5"X480"	3	11178	04865	270020410	TC	54	77	28		TL	F	243	240	155		33	2	5			17	0	0	1				
				TO 270020412									239															
															P	16	38	142	11	2	1	2	2	0	2	0		40
																	31		5			22	2	0				
05			G8266	TESTED-PL										134	AVG	16	37	144	6	3	1	1	2	0	1	0	33	41	
0.625"X120.5"X480"	1	4654	04778	270020501	TC	56	78	27		TL	F	153	215	156		27	2	4			15	0	0	1				
													111															
															P	17	38	146	6	3	1	1	2	0	1	0		42
																	28		4			21	1	0				

注釈 NOTES
※1 Location Orientation 位置・方向, T:頭部 Top, B:底部 Bottom, L:圧延方向 Longitudinal, C:直角方向 Transverse, Z:板厚方向 Through Thickness, R:45° 方向 45Deg. to the Longitudinal Axis
※2 GL 標点距離 Gage Length, A:50mm 平形試験片 Rectangular, B:50mm 丸形試験片 Round, C:70mm 平形試験片 Rectangular, D:70mm 丸形試験片 Round, E:80mm 平形試験片 Rectangular, F:80mm 丸形試験片 Round, G:200mm, H:2", I:8", J:5.65$\sqrt{So}$, K:4$\sqrt{So}$
※3 RA:絞り Reduction of Area, YR:降伏比 Yield Ratio, ※4 A:合格 Acceptable, ※5 F:標準寸法 FULL SIZE, 2:2.5mm, 3:3.3mm, 4:3.33mm, 5:5.0mm, 6:6.67mm, 7:7.5mm, 8:6.7mm, 9:製品板厚 PlateThickness, ※6 P:製品分析 Product Analysis,
※7 N:焼準 Normalized, Q:焼入れ Quenched, T:焼戻し Tempered, CR:Controlled Rolled, NIC:NIC Process/TMC Process, CLC:CLC Process/TMC Process, AR:As Rolled, TMR:TMR Process/TMC Process, NR:Normalizing Rolled
SH:延性破面率 Shear Fracture, CF:脆性破面率 Crystallinity Fracture, LE:横膨出 Lateral Expansion, AGS:オーステナイト粒度 Austenite Grain Size, FGS:フェライト粒度 Ferrite Grain Size, SR:Stress Relieved/Post Weld Heat Treatment
温度 Temperature C: °C F: °F

上記注文品は御指定の規格または仕様に従って製造され、その要求事項を満足していることを証明します。

WE HEREBY CERTIFY THAT THE MATERIAL DESCRIBED HEREIN HAS BEEN MADE IN ACCORDANCE WITH THE RULES OF THE CONTRACT.

T. Adachi

君津製鐵所 品質保証室
HEAD OF DEPARTMENT
QUALITY ASSURANCE DEPT.
KIMITSU WORKS

AY4002602512

B

新日鐵住金株式会社
NIPPON STEEL & SUMITOMO METAL CORPORATION

本社 HEAD OFFICE : 〒100-8071 東京都千代田区丸の内二丁目6番1号 2-6-1, MARUNOUCHI, CHIYODA-KU, TOKYO 100-8071, JAPAN
君津製鐵所 KIMITSU WORKS : 〒299-1141 千葉県君津市君津1番地 1, KIMITSU, KIMITSU-CITY, CHIBA-PREF. 299-1141 JAPAN

鋼材検査証明書
INSPECTION CERTIFICATE

注文者 SHIPPER : HANWA CO., LTD.
注文者照合番号 REFERENCE No. : 228410-685211000
契約番号 CONTRACT No. : 3-811-H1-5-3-AT01
商品名 COMMODITY : HOT ROLLED STEEL PLATES
規格 SPECIFICATION : ASME SA-516 GRADE 70-E10-A11 (AS PER EN 10204 CERTIFICATE ON MATERIAL TESTS 3.1)
文書番号 DOCUMENT No. :
需要家 CUSTOMER : EDMONTON EXCHANGER GROUP OF C-OMPANIES
需要家管理番号 CUSTOMER'S CONTROL No. : E10911-J1010ER E3001A02Q0 E05

証明書番号 CERTIFICATE No. : P-22373 頁 PAGE : 50E
発行年月日 DATE OF ISSUE : 2013-03-25
1001 2**DM*****
*****CEW**

寸法 DIMENSION mm, 'inch, 'feet	員数 QUANTITY	質量 MASS KG	製造番号 CAST No. / 試験番号 TEST No.	製品番号 PLATE No.	引張試験 TENSILE TEST: LOCATION ORIENTATION	耐力 YS 0.2% KSI	引張強さ TS KSI	伸び EL %	衝撃試験 IMPACT TEST: LOCATION ORIENTATION	2V - 50F FT. LB 平均値 AVG	個々値 EACH	HBW	化学成分 CHEMICAL COMPOSITION %	備考 REMARKS
				HEAT TREATMENT.										
				PLATE & TEST SPECIMEN NORMALIZING : 910CX 10MIN.										
				CHARPY IMPACT TEST TEMPERATURE (SI) : - 46C										
				LADLE CEQ1 = C+MN/6+(NI+CU)/15+(CR+MO+V)/5										
				PRODUCT CEQ1 = C+MN/6+(NI+CU)/15+(CR+MO+V)/5										
				LADLE TE1 = CU+NI+CR+MO										
				LADLE TE3 = CR+MO										
				PRODUCT TE1 = CU+NI+CR+MO										
				CHEMICAL COMPOSITION % : 'N' X10000										
				CHEMICAL COMPOSITION % : 'TE3' X100										
				LADLE TREATMENT : VACUUM DEGASSED										
				SULPHIDE SHAPE CONTROL										

MTR APPROVED 2014 EDMONTON EXCHANGER

注釈 NOTES
注1 Location Orientation 位置・方向, T:頂部 Top, B:底部 Bottom, L:圧延方向 Longitudinal, C:直角方向 Transverse, Z:板厚方向 Through Thickness, R:45°方向 45Deg. to the Longitudinal Axis
注2 GL:検点距離 Gage Length, A:50mm 平形試験片 Rectangular, B:50mm 丸形試験片 Round, C:70mm 平形試験片 Rectangular, D:70mm 丸形試験片 Round, E:80mm 平形試験片 Rectangular, F:80mm 丸形試験片 Round, G:200mm, H:2", I:8", J:5.65√So, K:4√So
注3 RA:絞り Reduction of Area, YR:降伏比 Yield Ratio, 注4 A:合格 Acceptable, 注5 F:標準寸法 FULL SIZE, 2:2.5mm, 3:3.3mm, 4:3.33mm, 5:5.0mm, 6:6.67mm, 7:7.5mm, 8:6.7mm, 9:製品板厚 PlateThickness, 注6 P:製品分析 Product Analysis,
注7 N:焼準 Normalized, Q:焼入れ Quenched, T:焼戻し Tempered, CR:Controlled Rolled, NIC:NIC Process/TMC Process, CLC:CLC Process/TMC Process, AR:As Rolled, TMR:TMR Process/TMC Process, NR:Normalizing Rolled
SH:延性破面率 Shear Fracture, CF:脆性破面率 Crystallinity Fracture, LE:横膨出 Lateral Expansion, AGS:オーステナイト粒度 Austenite Grain Size, FGS:フェライト粒度 Ferrite Grain Size, SR:Stress Relieved/Post Weld Heat Treatment
溶接 Temperature °C °F

上記注文品は御指定の規格または仕様に従って製造され、その要求事項を満足していることを証明します。

WE HEREBY CERTIFY THAT THE MATERIAL DESCRIBED HEREIN HAS BEEN MADE IN ACCORDANCE WITH THE RULES OF THE CONTRACT.

T. Adachi
君津製鐵所 品質保証室
HEAD OF DEPARTMENT
QUALITY ASSURANCE DEPT.
KIMITSU WORKS

A24905902512

B

注文者 SHIPPER : HANWA CO., LTD.
注文者照合番号 REFERENCE No. : 228410-685211000
契約番号 CONTRACT No. : 3-811-H1-5-3-AT01
商品名 COMMODITY : HOT ROLLED STEEL PLATES
規格 SPECIFICATION : ASME SA-516 GRADE 70-E10-A11
文書番号 DOCUMENT No. :
需要家 CUSTOMER : EDMONTON EXCHANGER GROUP OF C-OMPANIES

新日鐵住金株式会社
NIPPON STEEL & SUMITOMO METAL CORPORATION

鋼材検査証明書
INSPECTION CERTIFICATE

(AS PER EN 10204 CERTIFICATE ON MATERIAL TESTS 3.1)

需要家管理番号 CUSTOMER'S CONTROL No. : E10911-J1010ER E3001A02Q0 E05

本社 HEAD OFFICE : 〒100-8071 東京都千代田区丸の内二丁目6番1号 2-6-1, MARUNOUCHI, CHIYODA-KU, TOKYO 100-8071, JAPAN
君津製鐵所 KIMITSU WORKS : 〒299-1141 千葉県君津市君津1番地 1, KIMITSU, KIMITSU-CITY, CHIBA-PREF, 299-1141 JAPAN

証明書番号 CERTIFICATE No. : P-22373 頁 PAGE : 26
発行年月日 DATE OF ISSUE : 2013-03-25
1001 2**DM*****
*****CEW**

寸法 DIMENSION mm,":inch,':feet	員数 QUANTITY	質量 MASS KG	製鋼番号 CAST No. / 試験番号 TEST No.	製品番号 PLATE No.	LOCATION ORIENTATION GL ※1	LOCATION ORIENTATION ※2	引張試験 TENSILE TEST 耐力降伏点 YS 0.2% KSI	引張強さ TS KSI	伸び EL %	%	BEND TEST 曲げ試験	LOCATION ORIENTATION ※1	SIZE	衝撃試験 IMPACT TEST 2V-50F FT.LB 平均値 AVG	個々値 EACH	HBW	C ×100	Si ×100	Mn ×100	P ×1000	S ×1000	Cu ×100	Ni ×100	Cr ×100	Mo ×100	Nb ×1000	V ×1000	Ti ×1000	Ceq.1 ×100	CONDITION OF SUPPLY ※7
																		N ×1000	TE3 ×1000	TE1 ×100			CA ×10000	B ×10000	TI ×100		Pcm ×100	Sol.Al ×100	Ceq.2 ×100	
04			G8271	TESTED-PL																										
0.625"X96.5"X480"	1	3726	04865	270020409	TC	I	54	77	28			TL	F	243	250	AVG	16	37	142	11	2	1	2	2	0	11	0	32	40	
															240	155		33	2	5			17	0	0					
															239															
																P16	38	142	11	2	1	2	2	0	12	0		40		
																	31		5			22	2	0					
04			G8271	FROM																										
0.625"X96.5"X480"	3	11178	04865	270020410 TO 270020412	TC	I	54	77	28			TL	F	243	250	AVG	16	37	142	11	2	1	2	2	0	11	0	32	40	
															240	155		33	2	5			17	0	0					
															239															
																P16	38	142	11	2	1	2	2	0	12	0		40		
																	31		5			22	2	0					
05			G8266	TESTED-PL																										
0.625"X120.5"X480"	1	4654	04778	270020501	TC	I	56	78	27			TL	F	153	134	AVG	16	37	144	6	3	1	1	2	0	11	0	33	41	
															215	156		27	2	4			15	0	0					
															111															
																P17	38	146	6	3	1	1	2	0	12	0		42		
																	28		4			21	1	0					

注釈 NOTES

※1 Location Orientation 位置・方向, T:頭部 Top, B:底部 Bottom, L:圧延方向 Longitudinal, C:直角方向 Transverse, Z:板厚方向 Through Thickness, R:45° 方向 45Deg. to the Longitudinal Axis

※2 GL 標点距離 Gage Length, A:50mm 平形試験片 Rectangular, B:50mm 丸形試験片 Round, C:70mm 平形試験片 Rectangular, D:70mm 丸形試験片 Round, E:80mm 平形試験片 Rectangular, F:80mm 丸形試験片 Round, G:200mm, H:2", I:8", J:5.65$\sqrt{So}$, K:4$\sqrt{So}$

※3 RA:絞り Reduction of Area, YR:降伏比 Yield Ratio, ※4 A:合格 Acceptable, ※5 F:標準寸法 FULL SIZE, 2:2.5mm, 3:3.3mm, 4:3.33mm, 5:5.0mm, 6:6.67mm, 7:7.5mm, 8:6.7mm, 9:製品板厚 PlateThickness, ※6 P:製品分析 Product Analysis,

※7 N:焼準 Normalized, Q:焼入れ Quenched, T:焼戻し Tempered, CR:Controlled Rolled, NIC:NIC Process/TMC Process, CLC:CLC Process/TMC Process, AR:As Rolled, TMR:TMR Process/TMC Process, NR:Normalizing Rolled

SH:延性破面率 Shear Fracture, CF:脆性破面率 Crystallinity Fracture, LE:横広出 Lateral Expansion, AGS:オーステナイト粒度 Austenite Grain Size, FGS:フェライト粒度 Ferrite Grain Size, SR:Stress Relieved/Post Weld Heat Treatment

温度 Temperature [ ]°C [ ]°F

上記注文品は御指定の規格または仕様に従って製造され、その要求事項を満足していることを証明します。

WE HEREBY CERTIFY THAT THE MATERIAL DESCRIBED HEREIN HAS BEEN MADE IN ACCORDANCE WITH THE RULES OF THE CONTRACT.

17696

T. Adachi

君津製鐵所 品質保証室長
HEAD OF DEPARTMENT
QUALITY ASSURANCE DEPT.
KIMITSU WORKS

AY4002602512

B

注文者 SHIPPER : HANWA CO., LTD.
注文者照合番号 REFERENCE No. : 228410-685211000
契約番号 CONTRACT No. : 3-811-H1-5-3-AT01
商品名 COMMODITY : HOT ROLLED STEEL PLATES
規格 SPECIFICATION : ASME SA-516 GRADE 70-E10-A11
文書番号 DOCUMENT No. :
需要家 CUSTOMER : EDMONTON EXCHANGER GROUP OF C-OMPANIES

新日鐵住金株式会社
NIPPON STEEL & SUMITOMO METAL CORPORATION

鋼材検査証明書
INSPECTION CERTIFICATE

(AS PER EN 10204 CERTIFICATE ON MATERIAL TESTS 3.1)

本社 HEAD OFFICE : 〒100-8071 東京都千代田区丸の内二丁目6番1号 2-6-1, MARUNOUCHI, CHIYODA-KU, TOKYO 100-8071, JAPAN
君津製鐵所 KIMITSU WORKS : 〒299-1141 千葉県君津市君津1番地 1, KIMITSU, KIMITSU-CITY, CHIBA-PREF. 299-1141 JAPAN

証明書番号 CERTIFICATE No. : P-22373 頁 PAGE : 27
発行年月日 DATE OF ISSUE : 2013-03-25
1001 2**DM*****
*****CEW**
需要家管理番号 CUSTOMER'S CONTROL No. : E10911-J1010ER E3001A02Q0 E05

寸法 DIMENSION mm,":inch,':feet	員数 QUANTITY	質量 MASS KG	製鋼番号 CAST No. / 試験番号 TEST No.	製品番号 PLATE No.	LOCATION ORIENTATION GL ※1	引張試験 TENSILE TEST 耐力降伏点 YS 0.2% KSI	引張強さ TS KSI	伸び EL % ※3	BEND TEST 曲げ試験 ※4	LOCATION ORIENTATION ※1	SIZE ※3	衝撃試験 IMPACT TEST 2V-50F FT.LB 平均値 AVG	個々値 EACH	HBW	C ×100 −1000	Si ×100	Mn ×100	P ×1000	S ×1000	Cu ×100	Ni ×100	Cr ×100	Mo ×100	Nb −100 ×1000	V −100 −1000	TAl ×100	Ceq.1 ×100	供給状態 CONDITION OF SUPPLY ※7
															N ×1000	TE3 −1000−	TE1 −100				CA ×10000	B ×10000	TI ×100		Pcm ×100	Sol.Al ×100	Ceq.2 ×100	
05			G8266	FROM									134	AVG	16	37	144	6	3	1	1	2	0	11	0	33	41	
0.625"X120.5"X480"	2	9308	04778	270020502	TC	56	78	27		TL	F	153	215	156		27	2	4			15	0	0					
				TO									111															
				270020503																								
														P	17	38	146	6	3	1	1	2	0	12	0		42	
																28		4			21	1	0					
05			G8266	TESTED-PL									217	AVG	16	37	144	6	3	1	1	2	0	11	0	33	41	
0.625"X120.5"X480"	1	4654	04779	270020507	TC	56	79	30		TL	F	181	122	155		27	2	4			15	0	0					
													203															
														P	17	38	146	6	3	1	1	2	0	12	0		42	
																28		4			21	1	0					
05			G8266	FROM									217	AVG	16	37	144	6	3	1	1	2	0	11	0	33	41	
0.625"X120.5"X480"	2	9308	04779	270020508	TC	56	79	30		TL	F	181	122	155		27	2	4			15	0	0					
				TO									203															
				270020509																								
														P	17	38	146	6	3	1	1	2	0	12	0		42	
																28		4			21	1	0					

注釈 NOTES
※1 Location Orientation 位置・方向, T:頂部 Top, B:底部 Bottom, L:圧延方向 Longitudinal, C:直角方向 Transverse, Z:板厚方向 Through Thickness, R:45° 方向 45Deg. to the Longitudinal Axis
※2 GL 標点距離 Gage Length, A:50mm 平形試験片 Rectangular, B:50mm 丸形試験片 Round, C:70mm 平形試験片 Rectangular, D:70mm 丸形試験片 Round, E:80mm 平形試験片 Rectangular, F:80mm 丸形試験片 Round, G:200mm, H:2", I:8", J:5.65$\sqrt{So}$, K:4$\sqrt{So}$
※3 RA:絞り Reduction of Area, YR:降伏比 Yield Ratio, ※4 A:合格 Acceptable, ※5 F:標準寸法 FULL SIZE, 2:2.5mm, 3:3.3mm, 4:3.33mm, 5:5.0mm, 6:6.67mm, 7:7.5mm, 8:6.7mm, 9:製品板厚 PlateThickness, ※6 P:製品分析 Product Analysis,
※7 N:焼準 Normalized, Q:焼入れ Quenched, T:焼戻し Tempered, CR:Controlled Rolled, NIC:NIC Process/TMC Process, CLC:CLC Process/TMC Process, AR:As Rolled, TMR:TMR Process/TMC Process, NR:Normalizing Rolled
SH:延性破面率 Shear Fracture, CF:脆性破面率 Crystallinity Fracture, LE:横膨出 Lateral Expansion, AGS:オーステナイト粒度 Austenite Grain Size, FGS:フェライト粒度 Ferrite Grain Size, SR:Stress Relieved/Post Weld Heat Treatment
温度 Temperature °C °F

上記注文品は御指定の規格または仕様に従って製造され、その要求事項を満足していることを証明します。

WE HEREBY CERTIFY THAT THE MATERIAL DESCRIBED HEREIN HAS BEEN MADE IN ACCORDANCE WITH THE RULES OF THE CONTRACT.

T. Adachi

君津製鐵所 品質保証室長
HEAD OF DEPARTMENT
QUALITY ASSURANCE DEPT.
KIMITSU WORKS

AY4002702512

B

新日鐵住金株式会社
NIPPON STEEL & SUMITOMO METAL CORPORATION

本　　社 : 〒100-8071　東京都千代田区丸の内二丁目6番1号
HEAD OFFICE : 2-6-1, MARUNOUCHI, CHIYODA-KU, TOKYO 100-8071, JAPAN
君津製鐵所 : 〒299-1141　千葉県君津市君津１番地
KIMITSU WORKS : 1, KIMITSU, KIMITSU-CITY, CHIBA-PREF, 299-1141 JAPAN

注　文　者 SHIPPER : HANWA CO., LTD.
注文者照合番号 REFERENCE No. : 228410-685211000
契約番号 CONTRACT No. : 3-811-H1-5-3-AT01
商　品　名 COMMODITY : HOT ROLLED STEEL PLATES
規　　格 SPECIFICATION : ASME SA-516 GRADE 70-E10-A11
文書番号 DOCUMENT No. :

鋼材検査証明書
INSPECTION CERTIFICATE

(AS PER EN 10204 CERTIFICATE ON MATERIAL TESTS 3.1)

需要家 CUSTOMER : EDMONTON EXCHANGER GROUP OF COMPANIES

証明書番号 CERTIFICATE No. : P-22373　　頁 PAGE : 28
発行年月日 DATE OF ISSUE : 2013-03-25
需要家管理番号 CUSTOMER'S CONTROL No. : E10911-J1010ER　1001　2**DM*****　*****CEW**　E3001A02Q0　E05

寸法 DIMENSION mm,″:inch,′:feet	員数 QUANTITY	質量 MASS KG	製鋼番号 CAST No. / 試験番号 TEST No.	製品番号 PLATE No.	LOCATION ORIENTATION GL	引張試験 TENSILE TEST 耐力降伏点 YS 0.2% KSI	引張強さ TS	伸び EL %	%	BEND TEST 合否	LOCATION ORIENTATION SIZE	衝撃試験 IMPACT TEST 2V-50F FT.LB 平均値 AVG	個々値 EACH	HBW	化学成分 CHEMICAL COMPOSITION % C ×100	Si ×100	Mn ×100	P ×1000	S ×1000	Cu ×100	Ni ×100	Cr ×100	Mo ×100	Nb ×100	V ×100	TAI ×100	Ceq.1 ×100	CONDITION OF SUPPLY
05			G8266	TESTED-PL									206	AVG	16	37	144	6	3	1	1	2	0	11	0	33	41	
0.625″X120.5″X480″	1	4654	04782	270020513	TCI	55	78	27			TLF	131	132	155		27	2	4			15	0	0					
													55															
															P	17	38	146	6	3	1	1	2	0	12	0		42	
																	28		4		21	1	0					
05			G8266										206	AVG	16	37	144	6	3	1	1	2	0	11	0	33	41	
0.625″X120.5″X480″	1	4654	04782	270020514	TCI	55	78	27			TLF	131	132	155		27	2	4			15	0	0					
													55															
															P	17	38	146	6	3	1	1	2	0	12	0		42	
																	28		4		21	1	0					
05			G8266	TESTED-PL									163	AVG	16	37	144	6	3	1	1	2	0	11	0	33	41	
0.625″X120.5″X480″	1	4654	04791	270020504	TCI	56	79	32			TLF	138	109	156		27	2	4			15	0	0					
													143															
															P	17	38	146	6	3	1	1	2	0	12	0		42	
																	28		4		21	1	0					

注　釈 NOTES
※1 Location Orientation 位置・方向, T：頂部 Top, B：底部 Bottom, L：圧延方向 Longitudinal, C：直角方向 Transverse, Z：板厚方向 Through Thickness, R：45° 方向 45Deg. to the Longitudinal Axis
※2 GL 標点距離 Gage Length, A：50mm 平形試験片 Rectangular, B：50mm 丸形試験片 Round, C：70mm 平形試験片 Rectangular, D：70mm 丸形試験片 Round, E：80mm 平形試験片 Rectangular, F：80mm 丸形試験片 Round, G：200mm, H：2″, I：8″, J：5.65$\sqrt{So}$, K：4.$\sqrt{So}$
※3 RA：絞り Reduction of Area, YR：降伏比 Yield Ratio, ※4 A：合格 Acceptable, ※5 F：標準寸法 FULL SIZE, 2：2.5mm, 3：3.3mm, 4：3.33mm, 5：5.0mm, 6：6.67mm, 7：7.5mm, 8：6.7mm, 9：製品板厚 PlateThickness, ※6 P：製品分析 Product Analysis,
※7 N：焼準 Normalized, Q：焼入れ Quenched, T：焼戻し Tempered, CR：Controlled Rolled, NIC：NIC Process/TMC Process, CLC：CLC Process/TMC Process, AR：As Rolled, TMR：TMR Process/TMC Process, NR：Normalizing Rolled
SH：延性破面率 Shear Fracture, CF：脆性破面率 Crystallinity Fracture, LE：横膨出 Lateral Expansion, AGS：オーステナイト粒度 Austenite Grain Size, FGS：フェライト粒度 Ferrite Grain Size, SR：Stress Relieved/Post Weld Heat Treatment
温度 Temperature [C:] [F:] °C °F

上記注文品は御指定の規格または仕様に従って製造され、その要求事項を満足していることを証明します。

WE HEREBY CERTIFY THAT THE MATERIAL DESCRIBED HEREIN HAS BEEN MADE IN ACCORDANCE WITH THE RULES OF THE CONTRACT.

T. Adachi
君津製鐵所　品質保証室長
HEAD OF DEPARTMENT
QUALITY ASSURANCE DEPT.
KIMITSU WORKS

AY4002802512

B

新日鐵住金株式会社
NIPPON STEEL & SUMITOMO METAL CORPORATION

本社 HEAD OFFICE : 〒100-8071 東京都千代田区丸の内二丁目6番1号 2-6-1, MARUNOUCHI, CHIYODA-KU, TOKYO 100-8071, JAPAN
君津製鐵所 KIMITSU WORKS : 〒299-1141 千葉県君津市君津1番地 1, KIMITSU, KIMITSU-CITY, CHIBA-PREF. 299-1141 JAPAN

鋼材検査証明書
INSPECTION CERTIFICATE

注文者 SHIPPER : HANWA CO., LTD.
注文者照合番号 REFERENCE No. : 228410-685211000
契約番号 CONTRACT No. : 3-811-H1-5-3-AT01
商品名 COMMODITY : HOT ROLLED STEEL PLATES
規格 SPECIFICATION : ASME SA-516 GRADE 70-E10-A11 (AS PER EN 10204 CERTIFICATE ON MATERIAL TESTS 3.1)
文書番号 DOCUMENT No. :
需要家 CUSTOMER : EDMONTON EXCHANGER GROUP OF C-OMPANIES
需要家管理番号 CUSTOMER'S CONTROL No. : E10911-J1010ER E3001A02Q0 E05

証明書番号 CERTIFICATE No. : P-22373 頁 PAGE : 29
発行年月日 DATE OF ISSUE : 2013-03-25
1001 2**DM*****
*****CEW**

寸法 DIMENSION mm,':inch,':feet	員数 QUANTITY	質量 MASS KG	製鋼番号 CAST No. / 試験番号 TEST No.	製品番号 PLATE No.	引張試験 TENSILE TEST: LOCATION ORIENTATION GL ※1	耐力降伏点 YS 0.2% KSI	引張強さ TS KSI	伸び EL %	% ※3	BEND TEST 合否判定 ※1	衝撃試験 IMPACT TEST: LOCATION ORIENTATION SIZE ※1	2V-50F FT.LB 平均値 AVG	個々値 EACH	HBW	化学成分 CHEMICAL COMPOSITION %: C ×100	Si ×100	Mn ×100	P ×1000	S ×1000	Cu ×100	Ni ×100	Cr ×100	Mo ×100	Nb ×100	V ×100	TAl ×100	Ceq.1 ×100	熱処理状態 CONDITION OF SUPPLY ※7
	05		G8266	FROM									163	AVG	16	37	144	6	3	1	1	2	0	11	0	33	41	
0.625"X120.5"X480"	2	9308	04791	270020505	TC	56	79	32			TL	F138	109	156		27	2	4			15	0	0					
				TO									143															
				270020506																								
														P	17	38	146	6	3	1	1	2	0	12	0		42	
																28		4			21	1	0					
	05		G8266	TESTED-PL									222	AVG	16	37	144	6	3	1	1	2	0	11	0	33	41	
0.625"X120.5"X480"	1	4654	04792	27002051O	TC	57	79	28			TL	F176	151	156		27	2	4			15	0	0					
													155															
														P	17	38	146	6	3	1	1	2	0	12	0		42	
																28		4			21	1	0					
	05		G8266	FROM									222	AVG	16	37	144	6	3	1	1	2	0	11	0	33	41	
0.625"X120.5"X480"	2	9308	04792	270020511	TC	57	79	28			TL	F176	151	156		27	2	4			15	0	0					
				TO									155															
				270020512																								
														P	17	38	146	6	3	1	1	2	0	12	0		42	
																28		4			21	1	0					

注釈 NOTES ※1 Location Orientation 位置・方向, T:頭部 Top, B:底部 Bottom, L:圧延方向 Longitudinal, C:直角方向 Transverse, Z:板厚方向 Through Thickness, R:45° 方向 45Deg. to the Longitudinal Axis
※2 GL 標点距離 Gage Length, A:50mm 平形試験片 Rectangular, B:50mm 丸形試験片 Round, C:70mm 平形試験片 Rectangular, D:70mm 丸形試験片 Round, E:80mm 平形試験片 Rectangular, F:80mm 丸形試験片 Round, G:200mm, H:2", I:8", J:5.65$\sqrt{So}$, K:4$\sqrt{So}$
※3 RA:絞り Reduction of Area, YR:降伏比 Yield Ratio, ※4 A:合格 Acceptable, ※5 F:標準寸法 FULL SIZE, 2:2.5mm, 3:3.3mm, 4:3.33mm, 5:5.0mm, 6:6.67mm, 7:7.5mm, 8:6.7mm, 9:製品板厚 PlateThickness, ※6 P:製品分析 Product Analysis,
※7 N:焼準 Normalized, Q:焼入れ Quenched, T:焼戻し Tempered, CR:Controlled Rolled, NIC:NIC Process/TMC Process, CLC:CLC Process/TMC Process, AR:As Rolled, TMR:TMR Process/TMC Process, NR:Normalizing Rolled
SH:延性破面率 Shear Fracture, CF:脆性破面率 Crystallinity Fracture, LE:横膨出 Lateral Expansion, AGS:オーステナイト粒度 Austenite Grain Size, FGS:フェライト粒度 Ferrite Grain Size, SR:Stress Relieved/Post Weld Heat Treatment
温度 Temperature C: F:

上記注文品は御指定の規格または仕様に従って製造され、その要求事項を満足していることを証明します。

WE HEREBY CERTIFY THAT THE MATERIAL DESCRIBED HEREIN HAS BEEN MADE IN ACCORDANCE WITH THE RULES OF THE CONTRACT.

Quad Process Equipment Inc. JUN 10 2013 Quality Department

T. Adachi
君津製鐵所 品質保証室長
HEAD OF DEPARTMENT QUALITY ASSURANCE DEPT. KIMITSU WORKS

AY4002902512

B

注文者 SHIPPER : HANWA CO., LTD.
注文者照合番号 REFERENCE No. : 228410-685211000
契約番号 CONTRACT No. : 3-811-H1-5-3-AT01
商品名 COMMODITY : HOT ROLLED STEEL PLATES
規格 SPECIFICATION : ASME SA-516 GRADE 70-E10-A11
文書番号 DOCUMENT No. :
需要家 CUSTOMER : EDMONTON EXCHANGER GROUP OF C-OMPANIES

新日鐵住金株式会社
NIPPON STEEL & SUMITOMO METAL CORPORATION

鋼材検査証明書
INSPECTION CERTIFICATE

(AS PER EN 10204 CERTIFICATE ON MATERIAL TESTS 3.1)

需要家管理番号 CUSTOMER'S CONTROL No. : E10911-J1010ER E3001A02Q0 E05

本社 HEAD OFFICE : 〒100-8071 東京都千代田区丸の内二丁目6番1号 2-6-1, MARUNOUCHI, CHIYODA-KU, TOKYO 100-8071, JAPAN
君津製鐵所 KIMITSU WORKS : 〒299-1141 千葉県君津市君津1番地 1, KIMITSU, KIMITSU-CITY, CHIBA-PREF. 299-1141 JAPAN

証明書番号 CERTIFICATE No. : P-22373 頁 PAGE : 32
発行年月日 DATE OF ISSUE : 2013-03-25
1001 2**DM***** *****CEW**

寸法 DIMENSION mm,":inch,':feet	員数 QUANTITY	質量 MASS KG	製鋼番号 CAST No. / 試験番号 TEST No.	製品番号 PLATE No.	LOCATION ORIENTATION GL ※1 ※2	引張試験 TENSILE TEST 耐力降伏点 YS 0.2% KSI	引張強さ TS KSI	伸び EL %	% ※3	BEND TEST 合否 ※4	LOCATION ORIENTATION SIZE ※1 ※5	衝撃試験 IMPACT TEST 2V-50F FT.LB 平均値 AVG	個々値 EACH	HBW	化学成分 CHEMICAL COMPOSITION % C ×100 ~1000	Si ×100	Mn ×100	P ×1000	S ×1000	Cu ×100	Ni ×100	Cr ×100	Mo ×100	Nb ~100 ~1000	V ~100 ~1000	Ti ~100	Ceq.1 ~100	N ~1000	TE3 ~1000	TE1 ~100	CA ~10000	B ~10000	Pcm ~100	Sol.Al ~100	Ceq.2 ~100	CONDITION OF SUPPLY ※7
06			G8271	TESTED-PL																														
0.750"X96.5"X480"	1	4467	04868	270020604	TC	56	77	30			TL	F 249	265	AVG	16	37	142	11	2	1	2	2	0	1	1	0	32	40							
													223	153		33	2	5			17	0	0											
													258																						
															P 16	38	142	10	2	1	2	2	0	1	2	0		40							
																32		5			21	1	0											
06			G8271	FROM																														
0.750"X96.5"X480"	2	8934	04868	270020605	TC	56	77	30			TL	F 249	265	AVG	16	37	142	11	2	1	2	2	0	1	1	0	32	40							
				TO 270020606									223	153		33	2	5			17	0	0											
													258																						
															P 16	38	142	10	2	1	2	2	0	1	2	0		40							
																32		5			21	1	0											
07			G8266	TESTED-PL																														
0.750"X120.5"X480"	1	5579	04772	270020701	TC	55	77	29			TL	F 205	193	AVG	16	37	144	6	3	1	1	2	0	1	1	0	33	41							
													212	154		27	2	4			15	0	0											
													210																						
															P 16	38	145	6	3	1	1	2	0	1	2	0		41							
																28		4			20	0	0											

注釈 NOTES
※1 Location Orientation 位置・方向, T:頂部 Top, B:底部 Bottom, L:圧延方向 Longitudinal, C:直角方向 Transverse, Z:板厚方向 Through Thickness, R:45° 方向 45Deg. to the Longitudinal Axis
※2 GL 標点距離 Gage Length, A:50mm 平形試験片 Rectangular, B:50mm 丸形試験片 Round, C:70mm 平形試験片 Rectangular, D:70mm 丸形試験片 Round, E:80mm 平形試験片 Rectangular, F:80mm 丸形試験片 Round, G:200mm, H:2", I:8", J:5.65$\sqrt{So}$, K:4$\sqrt{So}$
※3 RA:絞り Reduction of Area, YR:降伏比 Yield Ratio, ※4 A:合格 Acceptable, ※5 F:標準寸法 FULL SIZE, 2:2.5mm, 3:3.3mm, 4:3.33mm, 5:5.0mm, 6:6.67mm, 7:7.5mm, 8:6.7mm, 9:製品板厚 PlateThickness, ※6 P:製品分析 Product Analysis,
※7 N:焼準 Normalized, Q:焼入れ Quenched, T:焼戻し Tempered, CR:Controlled Rolled, NIC:NIC Process/TMC Process, CLC:CLC Process/TMC Process, AR:As Rolled, TMR:TMR Process/TMC Process, NR:Normalizing Rolled
SH:延性破面率 Shear Fracture, CF:脆性破面率 Crystallinity Fracture, LE:横膨出 Lateral Expansion, AGS:オーステナイト粒度 Austenite Grain Size, FGS:フェライト粒度 Ferrite Grain Size, SR:Stress Relieved/Post Weld Heat Treatment
温度 Temperature C: °C F: °F

上記注文品は御指定の規格または仕様に従って製造され、その要求事項を満足していることを証明します。

WE HEREBY CERTIFY THAT THE MATERIAL DESCRIBED HEREIN HAS BEEN MADE IN ACCORDANCE WITH THE RULES OF THE CONTRACT.

T. Adachi
君津製鐵所 品質保証室長
HEAD OF DEPARTMENT
QUALITY ASSURANCE DEPT.
KIMITSU WORKS

AY4003202512

B

注文者 SHIPPER	HANWA CO., LTD.
注文者照合番号 REFERENCE No.	228410-685211000
契約番号 CONTRACT No.	3-811-H1-5-3-AT01
商品名 COMMODITY	HOT ROLLED STEEL PLATES
規格 SPECIFICATION	ASME SA-516 GRADE 70-E10-A11
文書番号 DOCUMENT No.	
需要家 CUSTOMER	EDMONTON EXCHANGER GROUP OF C-OMPANIES

新日鐵住金株式会社
NIPPON STEEL & SUMITOMO METAL CORPORATION

本社 HEAD OFFICE: 〒100-8071 東京都千代田区丸の内二丁目6番1号 2-6-1, MARUNOUCHI, CHIYODA-KU, TOKYO 100-8071, JAPAN
君津製鐵所 KIMITSU WORKS: 〒299-1141 千葉県君津市君津1番地 1, KIMITSU, KIMITSU-CITY, CHIBA-PREF. 299-1141 JAPAN

鋼材検査証明書
INSPECTION CERTIFICATE

(AS PER EN 10204 CERTIFICATE ON MATERIAL TESTS 3.1)

証明書番号 CERTIFICATE No.	P-22373
頁 PAGE	50E
発行年月日 DATE OF ISSUE	2013-03-25
	1001
需要家管理番号 CUSTOMER'S CONTROL No.	E10911-J1010ER E3001A0200 E05
	2**DM***** *****CEW**

寸法 DIMENSION mm,'inch,'feet	員数 QUANTITY	質量 MASS KG	製鋼番号 CAST No. / 試験番号 TEST No.	製品番号 PLATE No.	LOCATION ORIENTATION GL	引張試験 TENSILE TEST 耐力 YS 0.2% KSI	引張強さ TS	伸び EL %	%	HEAT TREATMENT	LOCATION ORIENTATION	衝撃試験 IMPACT TEST 2V - 50F FT. LB 平均値 AVG	個々値 EACH	HBW	化学成分 CHEMICAL COMPOSITION % C	Si	Mn	P	S	Cu	Ni	Cr	Mo	Nb	V	TAl	Ceq	CEN	DI-RACK CONDITION OF SHIPMENT
				HEAT TREATMENT.																								
				PLATE & TEST SPECIMEN NORMALIZING : 910CX 10MIN.																								
				CHARPY IMPACT TEST TEMPERATURE (SI) : - 46C																								
				LADLE CEQ1 = C+MN/6+(NI+CU)/15+(CR+MO+V)/5																								
				PRODUCT CEQ1 = C+MN/6+(NI+CU)/15+(CR+MO+V)/5																								
				LADLE TE1 = CU+NI+CR+MO																								
				LADLE TE3 = CR+MO																								
				PRODUCT TE1 = CU+NI+CR+MO																								
				CHEMICAL COMPOSITION % : 'N' X10000													N											
				CHEMICAL COMPOSITION % : 'TE3' X100													TE3	TE1				CA	B	TI				
				LADLE TREATMENT : VACUUM DEGASSED																					Pcm	Sol. Al	Ceq 2	
				SULPHIDE SHAPE CONTROL																								

MTR APPROVED
EDMONTON EXCHANGER

注 釈 NOTES

※1 Location Orientation 位置・方向, T:頂部 Top, B:底部 Bottom, L:圧延方向 Longitudinal, C:直角方向 Transverse, Z:板厚方向 Through Thickness, R:45° 方向 45Deg. to the Longitudinal Axis

※2 GL 標点距離 Gage Length, A:50mm 平形試験片 Rectangular, B:50mm 丸形試験片 Round, C:70mm 平形試験片 Rectangular, D:70mm 丸形試験片 Round, E:80mm 平形試験片 Rectangular, F:80mm 丸形試験片 Round, G:200mm, H:2", I:8", J:5.65$\sqrt{So}$, K:4$\sqrt{So}$

※3 RA:絞り Reduction of Area, YR:降伏比 Yield Ratio, ※4 A:合格 Acceptable, ※5 F:標準寸法 FULL SIZE, 2:2.5mm, 3:3.3mm, 4:3.33mm, 5:5.0mm, 6:6.67mm, 7:7.5mm, 8:6.7mm, 9:製品板厚 PlateThickness, ※6 P:製品分析 Product Analysis,

※7 N:焼準 Normalized, Q:焼入れ Quenched, T:焼戻し Tempered, CR:Controlled Rolled, NIC:NIC Process/TMC Process, CLC:CLC Process/TMC Process, AR:As Rolled, TMR:TMR Process/TMC Process, NR:Normalizing Rolled

SH:延性破面率 Shear Fracture, CF:脆性破面率 Crystallinity Fracture, LE:横膨出 Lateral Expansion, AGS:オーステナイト粒度 Austenite Grain Size, FGS:フェライト粒度 Ferrite Grain Size, SR:Stress Relieved/Post Weld Heat Treatment

温度 Temperature C F

上記注文品は御指定の規格または仕様に従って製造され、その要求事項を満足していることを証明します。

WE HEREBY CERTIFY THAT THE MATERIAL DESCRIBED HEREIN HAS BEEN MADE IN ACCORDANCE WITH THE RULES OF THE CONTRACT.

T. Adachi

君津製鐵所 品質保証室長
HEAD OF DEPARTMENT
QUALITY ASSURANCE DEPT.
KIMITSU WORKS

AY4005002512

B

注文者 SHIPPER : HANWA CO., LTD.
注文者照合番号 REFERENCE No. : 228410-685211000
契約番号 CONTRACT No. : 3-811-H1-5-3-AT01
商品名 COMMODITY : HOT ROLLED STEEL PLATES
規格 SPECIFICATION : ASME SA-516 GRADE 70-E10-A11
文書番号 DOCUMENT No. :
需要家 CUSTOMER : EDMONTON EXCHANGER GROUP OF C-OMPANIES

新日鐵住金株式会社
NIPPON STEEL & SUMITOMO METAL CORPORATION

本社 HEAD OFFICE : 〒100-8071 東京都千代田区丸の内二丁目6番1号 2-6-1, MARUNOUCHI, CHIYODA-KU, TOKYO 100-8071, JAPAN
君津製鐵所 KIMITSU WORKS : 〒299-1141 千葉県君津市君津1番地 1, KIMITSU, KIMITSU-CITY, CHIBA-PREF. 299-1141 JAPAN

鋼材検査証明書
INSPECTION CERTIFICATE

(AS PER EN 10204 CERTIFICATE ON MATERIAL TESTS 3.1)

証明書番号 CERTIFICATE No. : P-22373 頁 PAGE : 30
発行年月日 DATE OF ISSUE : 2013-03-25
1001 2**DM*****
*****CEW**
需要家管理番号 CUSTOMER'S CONTROL No. : E10911-J1010ER E3001A02Q0 E05

寸法 DIMENSION mm,":inch,':feet	員数 QUANTITY	質量 MASS KG	製鋼番号 CAST No. / 試験番号 TEST No.	製品番号 PLATE No.	LOCATION ORIENTATION GL	引張試験 TENSILE TEST 耐力降伏点 YS 0.2% KSI	引張強さ TS KSI	伸び EL %	%	BEND TEST 曲げ試験	LOCATION ORIENTATION SIZE	衝撃試験 IMPACT TEST 2V-50F FT.LB 平均値 AVG	個々値 EACH	HBW	化学成分 CHEMICAL COMPOSITION % C	Si	Mn	P	S	Cu	Ni	Cr	Mo	Nb	V	TAl	Ceq.1	N	TE3	TE1	Pcm	Sol.Al	Ceq.2	B	Ti	CA	熱処理状態 CONDITION OF SUPPLY
06			G8271	TESTED-PL									256	AVG	16	37	142	11	2	1	2	2	0	11	0	32	40									
0.750"X96.5"X480"	1	4467	04856	270020607	TCI	54	78	30			TLF	258	246	154		33	2	5			17	0	0													
													273																							
															P16	38	142	10	2	1	2	2	0	12	0		40									
																32		5			21	1	0												
06			G8271	FROM									256	AVG	16	37	142	11	2	1	2	2	0	11	0	32	40									
0.750"X96.5"X480"	2	8934	04856	270020608 TO 270020609	TCI	54	78	30			TLF	258	246	154		33	2	5			17	0	0													
													273																							
															P16	38	142	10	2	1	2	2	0	12	0		40									
																32		5			21	1	0												
06			G8271	TESTED-PL									251	AVG	16	37	142	11	2	1	2	2	0	11	0	32	40									
0.750"X96.5"X480"	1	4467	04864	270020601	TCI	52	76	30			TLF	222	184	152		33	2	5			17	0	0													
													230																							
															P16	38	142	10	2	1	2	2	0	12	0		40									
																32		5			21	1	0												

注釈 NOTES ※1 Location Orientation 位置・方向, T:頂部 Top, B:底部 Bottom, L:圧延方向 Longitudinal, C:直角方向 Transverse, Z:板厚方向 Through Thickness, R:45° 方向 45Deg. to the Longitudinal Axis
※2 GL 標点距離 Gage Length, A: 50mm 平形試験片 Rectangular, B: 50mm 丸形試験片 Round, C: 70mm 平形試験片 Rectangular, D: 70mm 丸形試験片 Round, E: 80mm 平形試験片 Rectangular, F: 80mm 丸形試験片 Round, G: 200mm, H: 2", I: 8", J: $5.65\sqrt{So}$, K: $4\sqrt{So}$
※3 RA: 絞り Reduction of Area, YR:降伏比 Yield Ratio, ※4 A:合格 Acceptable, ※5 F:標準寸法 FULL SIZE, 2: 2.5mm, 3: 3.3mm, 4: 3.33mm, 5: 5.0mm, 6: 6.67mm, 7: 7.5mm, 8: 6.7mm, 9:製品板厚 PlateThickness, ※6 P:製品分析 Product Analysis,
※7 N:焼準 Normalized, Q:焼入れ Quenched, T:焼戻し Tempered, CR: Controlled Rolled, NIC: NIC Process/TMC Process, CLC: CLC Process/TMC Process, AR: As Rolled, TMR: TMR Process/TMC Process, NR: Normalizing Rolled
SH:延性破面率 Shear Fracture, CF:脆性破面率 Crystallinity Fracture, LE:横膨出 Lateral Expansion, AGS:オーステナイト粒度 Austenite Grain Size, FGS:フェライト粒度 Ferrite Grain Size, SR: Stress Relieved/Post Weld Heat Treatment
温度 Temperature [ ] °C [ ] °F

上記注文品は御指定の規格または仕様に従って製造され、その要求事項を満足していることを証明します。

WE HEREBY CERTIFY THAT THE MATERIAL DESCRIBED HEREIN HAS BEEN MADE IN ACCORDANCE WITH THE RULES OF THE CONTRACT.

T. Adachi

君津製鐵所 品質保証室長
HEAD OF DEPARTMENT
QUALITY ASSURANCE DEPT.
KIMITSU WORKS

AX4003002512

B

注文者 SHIPPER : HANWA CO., LTD.
注文者照合番号 REFERENCE No. : 228410-685211000
契約番号 CONTRACT No. : 3-811-H1-5-3-AT01
商品名 COMMODITY : HOT ROLLED STEEL PLATES
規格 SPECIFICATION : ASME SA-516 GRADE 70-E10-A11
文書番号 DOCUMENT No. :

新日鐵住金株式会社
NIPPON STEEL & SUMITOMO METAL CORPORATION

本社 HEAD OFFICE : 〒100-8071 東京都千代田区丸の内二丁目6番1号 2-6-1, MARUNOUCHI, CHIYODA-KU, TOKYO 100-8071, JAPAN
君津製鐵所 KIMITSU WORKS : 〒299-1141 千葉県君津市君津1番地 1, KIMITSU, KIMITSU-CITY, CHIBA-PREF. 299-1141 JAPAN

鋼材検査証明書
INSPECTION CERTIFICATE

(AS PER EN 10204 CERTIFICATE ON MATERIAL TESTS 3.1)

証明書番号 CERTIFICATE No. : P-22373 PAGE : 31
発行年月日 DATE OF ISSUE : 2013-03-25
需要家 CUSTOMER : EDMONTON EXCHANGER GROUP OF C-OMPANIES
需要家管理番号 CUSTOMER'S CONTROL No. : E10911-J1010ER 1001 E3001A02Q0 2**DM***** *****CEW** E05

寸法 DIMENSION mm,″:inch,′:feet	員数 QUANTITY	質量 MASS KG	製鋼番号 CAST No. / 試験番号 TEST No.	製品番号 PLATE No.	LOCATION ORIENTATION GL.	引張試験 TENSILE TEST 耐力降伏点 YS 0.2% KSI	引張強さ TS	伸び EL %	%	BEND TEST 曲げ試験	LOCATION ORIENTATION SIZE	衝撃試験 IMPACT TEST 2V-50F FT.LB 平均値 AVG	個々値 EACH	HBW	化学成分 CHEMICAL COMPOSITION % C ×100	Si ×100	Mn ×100	P ×1000	S ×1000	Cu ×100	Ni ×100	Cr ×100	Mo ×100	Nb ×1000	V ×1000	TAl ×1000	Ceq.1 ×100	CONDITION OF SUPPLY
																N ×4000	TE3 ×1000	TE1 ×100			CA ×10000	B ×10000	TI ×100		Pcm ×100	Sol.Al ×100	Ceq.2 ×100	
06			G8271	FROM																							
0.750″X96.5″X480′	2	8934	04864	270020602 TO 270020603	TC1	52	76	30			TLF222	251 184 230	AVG 152	16	37 33	142 2	11 5	2	1	2 17	2 0	0 0	11	0	32	40	
														P16	38 32	142	10 5	2	1	2 21	2 1	0 0	12	0		40	
06			G8271	TESTED-PL																							
0.750″X96.5″X480′	1	4467	04867	270020610	TC1	56	77	29			TLF266	265 280 253	AVG 154	16	37 33	142 2	11 5	2	1	2 17	2 0	0 0	11	0	32	40	
														P16	38 32	142	10 5	2	1	2 21	2 1	0 0	12	0		40	
06			G8271	FROM																							
0.750″X96.5″X480′	2	8934	04867	270020611 TO 270020612	TC1	56	77	29			TLF266	265 280 253	AVG 154	16	37 33	142 2	11 5	2	1	2 17	2 0	0 0	11	0	32	40	
														P16	38 32	142	10 5	2	1	2 21	2 1	0 0	12	0		40	

注釈 NOTES

※1 Location Orientation 位置・方向, T:頂部 Top, B:底部 Bottom, L:圧延方向 Longitudinal, C:直角方向 Transverse, Z:板厚方向 Through Thickness, R:45° 方向 45Deg. to the Longitudinal Axis

※2 GL 標点距離 Gage Length, A:50mm 平形試験片 Rectangular, B:50mm 丸形試験片 Round, C:70mm 平形試験片 Rectangular, D:70mm 丸形試験片 Round, E:80mm 平形試験片 Rectangular, F:80mm 丸形試験片 Round, G:200mm, H:2", I:8", J:5.65$\sqrt{So}$, K:4.$\sqrt{So}$

※3 RA:絞り Reduction of Area, YR:降伏比 Yield Ratio, ※4 A:合格 Acceptable, ※5 F:標準寸法 FULL SIZE, 2:2.5mm, 3:3.3mm, 4:3.33mm, 5:5.0mm, 6:6.67mm, 7:7.5mm, 8:6.7mm, 9:製品板厚 PlateThickness, ※6 P:製品分析 Product Analysis,

※7 N:焼準 Normalized, Q:焼入れ Quenched, T:焼戻し Tempered, CR:Controlled Rolled, NIC:NIC Process/TMC Process, CLC:CLC Process/TMC Process, AR:As Rolled, TMR:TMR Process/TMC Process, NR:Normalizing Rolled

SH:延性破面率 Shear Fracture, CF:脆性破面率 Crystallinity Fracture, LE:横膨出 Lateral Expansion, AGS:オーステナイト粒度 Austenite Grain Size, FGS:フェライト粒度 Ferrite Grain Size, SR:Stress Relieved/Post Weld Heat Treatment

温度 Temperature °C °F

上記注文品は御指定の規格または仕様に従って製造され、その要求事項を満足していることを証明します。

WE HEREBY CERTIFY THAT THE MATERIAL DESCRIBED HEREIN HAS BEEN MADE IN ACCORDANCE WITH THE RULES OF THE CONTRACT.

T. Adachi

君津製鐵所 品質保証室長
HEAD OF DEPARTMENT
QUALITY ASSURANCE DEPT.
KIMITSU WORKS

AX4003102512

CERTIFICATE OF COMPLIANCE

edmonton exchanger
& manufacturing ltd.

5545-89 Street Edmonton, Alberta Canada T6E 5W9 www.edmontonexchanger.com tel 780.468.6722 • QC fax 780.466.4668 • sales fax 780.466.5155

Customer 5BLUE PROCESS EQUIPMENT INC. PO P6860-5B1108-20 Work Order C99147 Date 2013/05/28 CofC# 41304 Page 1 of 1

Item#	Description	Qty	Heat#
P99147-6	RING(S) - 1.0000" NOM X 74" OD X 62" ID (Material Spec: SA 516-70 Normalized) *Conforms to NACE MR0175 / ISO 15156-2 2009 Annex A*	1	M63810-FA29782202

Brinell Equipment: Newage Calibrated Pin
Brinell Hardness Tester

Material being supplied conforms to the latest ASME Code Section II, Part A, 2010 Edition, Addenda July 1, 2011. All welders and procedures are qualified to ASME Code Section IX.

Supplementary Examination - Items

5 Blue Process Equipment Inc. JUN 10 2013 Quality Department

edmonton exchanger
& manufacturing ltd.

5545-89 Street Edmonton, Alberta Canada T6E 5W9 www.edmontonexchanger.com tel 780.468.6722 • QC fax 780.466.4668 • sales fax 780.466.5155

CERTIFICATE OF COMPLIANCE

MTR List

Customer 5BLUE PROCESS EQUIPMENT PO P6860-5B1108-20 Work Order C99147 Date 2013/05/28 CofC# 41304 Page 1 of 1

Email to ango@5blue.com

Email to jdery-brochu@5blue.com

Email to kolsen@edmontonexchanger.com

MTR ID	Pages	Heat#	Thickness	Material Grades
17500	4	M63810-FA29782202	1"	SA 516-70 N

Heat#	Material Grades	MTR ID
M63810-FA29782202	SA 516-70 N	17500

5 Blue Process Equipment Inc.
JUN 10 2013
Quality Department

검 사 증 명 서
MILL TEST CERTIFICATE

HYUNDAI STEEL
당진제철소 충남 당진시 송악읍 고대리 167-32
Gocae-Ri, Songak-Eup, Dangjin, Chungnam, Korea

주문번호 Order No. : F121100070

품 명 Commodity : Hot Rolled Steel Plate

제품규격 Specification : ASME SA516-70 MT LTV

고객사 Customer : EDMONTON STEEL PLATE

주문자 Contractor : HYUNDAI CORPORATION

증명서 번호 Certificate No. : 20130103-PS-076-030

발행일자 Date of Issue : 2013-01-03

제품치수 Dimension	수량 Quantity	중량 Weight (LBS)	제강번호 Heat No.	제품번호 Product No.	Position	인장시험 Tensile Test							충격시험 Impact Test V Notch -50.8 °F			Division	화학성분 Chemical Composition(%) 단위 Unit 2 : x 100 3 : x 1,000 4 : x 10,000 5 : x 100,000															
						YP	TS	EL	YP-EL	RA	YR	N	Energy	SF	LE		C	Si	Mn	P	S	Cr	Ni	B	Ca	Cu	Mo	N	Nb	Ti	V	Sol -Al	CEQ
						(KSI)		(%)	(%)	(%)	(%)		(Ft-Lbs)	(%)	(mm)		4	3	3	4	4	2	2	4	4	3	2	4	3	3	3	3	3
1.000" x 120.5" x 480"	1	16,407	M63810	FA29782201	T	52.5	76.8	30					1: 215			L	1,542	345	1,187	126	26	18	18	3	14	135	0	37	14	2	2	31	409
													2: 190			C	1,517	342	1,201	126	23	18	18	3	14	133	0	38	14	2	2	31	410
													3: 232																			
													A: 212																			
1.000" x 120.5" x 480"	1	16,407	M63810	FA29782202	T	52.5	76.8	30					1: 215			L	1,542	345	1,187	126	26	18	18	3	14	135	0	37	14	2	2	31	409
													2: 190			C	1,517	342	1,201	126	23	18	18	3	14	133	0	38	14	2	2	31	410
													3: 232																			
													A: 212																			
1.000" x 120.5" x 480"	1	16,407	M63810	FA29782301	T	51.8	76.7	29					1: 224			L	1,542	345	1,187	126	26	18	18	3	14	135	0	37	14	2	2	31	409
													2: 223			C	1,499	344	1,195	124	23	18	18	2	14	133	0	35	14	2	2	31	407
													3: 216																			
													A: 221																			
1.000" x 120.5" x 480"	1	16,407	M63810	FA29782302	T	51.8	76.7	29					1: 224			L	1,542	345	1,187	126	26	18	18	3	14	135	0	37	14	2	2	31	409
													2: 223			C	1,499	344	1,195	124	23	18	18	2	14	133	0	35	14	2	2	31	407
													3: 216																			
													A: 221																			

NOTE
* Position – T:Top, M:Middle, B:Bottom
* Tensile test – Direction:Transverse, Gauge length:200mm (Rectangular), YP method : 0.2% off-set
* Impact test – Direction:Longitudinal, Size:10mmX10mm, SF:Shear fracture, LE:Lateral Expansion
* Division – C:Check analysis, L:Ladle analysis

17500

* ALL MATERIALS HAVE BEEN PRODUCED AS PER ASME SECTION II PART A SA 516-70 MT LTV + SA20 AS WELL AS SECTION VIII DIV.1 - 2010 EDITION.
* The plate is fully killed and fine grained steel. Basic oxygen process and Vacuum degassing process were applied.
Applicable Code is ASME Section II Part A 2010 Edition. The Certificate has been issued in compliance with EN 10204 (2004) 3.1.

상기의 제품은 검사의 결과 지정된 규격에 합격한 것을 증명합니다.
WE HEREBY CERTIFY THAT THE MATERIAL HAS BEEN MADE AND TESTED IN ACCORDANCE WITH THE ABOVE SPECIFICATION AND THE REQUIREMENTS

Signature S. B. Park
SURVEYOR TO : CHIEF OF QUALITY ASSURANCE TEAM

* 본 검사증명서는 원본인 전자문서(전자서명 정보 포함)로부터 출력된 사본입니다. 전자문서의 내용은 현대제철 고객포탈에서 확인하실 수 있습니다.(http://sm.hyundai-steel.com/cs/cm/login.jsp)
* This Mill Test Certificate is a copy that has been printed from original electronic document(with digital signing).
You are able to check an original electronic document at hyundaisteel's customer portal.(http:/sm.hyundai-steel.com/cs/cm/login.jsp)

검 사 증 명 서
MILL TEST CERTIFICATE
(Attached Sheet)

HYUNDAI STEEL
당진제철소 : 충남 당진시 송악읍 고대리 167-32
Godae-Ri, Songak-Eup, Dangjin Chungnam, Korea

주문번호 Order No. : F121100070

품 명 Commodity : Hot Rolled Steel Plate
고객사 Customer : EDMONTON STEEL PLATE
증명서 번호 Certificate No. : 20130103-PS-076-030
제품규격 Specification : ASME SA516-70 MT LTV
주문자 Contractor : HYUNDAI CORPORATION
발행일자 Date of Issue : 2013-01-03

제품번호 Product No.	Posion	경도 시험 Hard-ness Test HB
FA29782201	T	152.6
FA29782202	T	152.6
FA29782301	T	147.7
FA29782302	T	147.7

NOTE

* ALL MATERIALS HAVE BEEN PRODUCED AS PER ASME SECTION II PART A SA 516-70 MT LTV + SA20 AS WELL AS SECTION VIII DIV.1 - 2010 EDITION.
* The plate is fully killed and fine grained steel. Basic oxygen process and Vacuum degassing process were applied.
Applicable Code is ASME Section II Part A 2010 Edition. The Certificate has been issued in compliance with EN 10204 (2004) 3.1.

상기의 제품은 검사의 결과 지정된 규격에 합격한 것을 증명합니다.
WE HEREBY CERTIFY THAT THE MATERIAL HAS BEEN MADE AND TESTED IN ACCORDANCE WITH THE ABOVE SPECIFICATION AND THE REQUIREMENTS

Signature S. B. Park
SURVEYOR TO : CHIEF OF QUALITY ASSURANCE TEAM

* 본 검사증명서는 원본인 전자문서(전자서명 정보 포함)로부터 출력된 사본입니다. 전자문서의 내용은 현대제철 고객포탈에서 확인하실 수 있습니다.(http://sm.hyundai-steel.com/cs/cm/login.jsp)
* This Mill Test Certificate is a copy that has been printed from original electronic document(with digital signing).
You are able to check an original electronic document at hyundaisteel's customer portal.(http:/sm.hyundai-steel.com/cs/cm/login.jsp)

검 사 증 명 서
MILL TEST CERTIFICATE

HYUNDAI STEEL
당진제철소 충남 당진시 송악읍 고대리 167-32
Gocse-Ri, Songak-Eup, Dangjin, Chungnam, Korea

주문번호 Order No. : F121100070

품 명 Commodity : Hot Rolled Steel Plate

고객사 Customer : EDMONTON STEEL PLATE

증명서 번호 Certificate No. : 20130103-PS-076-031

제품규격 Specification : ASME SA516-70 MT LTV

주문자 Contractor : HYUNDAI CORPORATION

발행일자 Date of Issue : 2013-01-03

제품치수 Dimension	수량 Quantity	중량 Weight (LBS)	제강번호 Heat No.	제품번호 Product No.	Position	인장시험 Tensile Test							충격시험 Impact Test V Notch -50.8 °F			Division	화학성분 Chemical Composition(%) 단위 Unit 2 : x 100 3 : x 1,000 4 : x 10,000 5 : x 100,000														
						YP	TS	EL	YP-EL	RA	YR	N	Energy	SF	LE		C	Si	Mn	P	S	Cr	Ni	B	Ca	Cu	Mo	N	Nb	Ti	V	Sol -Al	CEQ
						(KSI)		(%)	(%)	(%)	(%)		(Ft-Lbs)	(%)	(mm)		4	3	3	4	4	2	2	4	4	3	2	4	3	3	3	3	3
1.000" x 120.5" x 480"	1	16,407	M63810	FA29860901	T	52.0	77.1	29					1: 254			L	1,542	345	1,187	126	26	18	18	3	14	135	0	37	14	2	2	31	409
													2: 215			C	1,521	339	1,189	126	23	18	18	2	11	136	0	32	13	2	2	31	408
													3: 116																			
													A: 195																			
1.000" x 120.5" x 480"	1	16,407	M63810	FA29860902	T	52.0	77.1	29					1: 254			L	1,542	345	1,187	126	26	18	18	3	14	135	0	37	14	2	2	31	409
													2: 215			C	1,521	339	1,189	126	23	18	18	2	11	136	0	32	13	2	2	31	408
													3: 116																			
													A: 195																			

*** Sub Total(008) *** 6 98,442(LBS)

*** Heat Treatment : Normalized : 1634.0°F 46 Min.

*** Grade Total *** 116 940,932(LBS) Ceq. G = C + Mn/6 + (Ni + Cu)/15 + (Cr + Mo +V)/5

*** Last Item ***

NOTE

* Position - T:Top, M:Middle, B:Bottom
* Tensile test - Direction:Transverse, Gauge length:200mm (Rectangular), YP method : 0.2% off-set
* Impact test - Direction:Longitudinal, Size:10mmX10mm, SF:Shear fracture, LE:Lateral Expansion
* Division - C:Check analysis, L:Ladle analysis

* ALL MATERIALS HAVE BEEN PRODUCED AS PER ASME SECTION II PART A SA 516-70 MT LTV + SA20 AS WELL AS SECTION VIII DIV.1 - 2010 EDITION.
* The plate is fully killed and fine grained steel. Basic oxygen process and Vacuum degassing process were applied.
Applicable Code is ASME Section II Part A 2010 Edition. The Certificate has been issued in compliance with EN 10204 (2004) 3.1.

상기의 제품은 검사의 결과 지정된 규격에 합격한 것을 증명합니다.
WE HEREBY CERTIFY THAT THE MATERIAL HAS BEEN MADE AND TESTED IN ACCORDANCE WITH THE ABOVE SPECIFICATION AND THE REQUIREMENTS

Signature S. B. Park
SURVEYOR TO : CHIEF OF QUALITY ASSURANCE TEAM

* 본 검사증명서는 원본인 전자문서(전자서명 정보 포함)로부터 출력된 사본입니다. 전자문서의 내용은 현대제철 고객포탈에서 확인하실 수 있습니다.(http://sm.hyundai-steel.com/cs/cm/login.jsp)
* This Mill Test Certificate is a copy that has been printed from original electronic document(with digital signing).
You are able to check an original electronic document at hyundaisteel's customer portal.(http:/sm.hyundai-steel.com/cs/cm/login.jsp)

검 사 증 명 서
MILL TEST CERTIFICATE
(Attached Sheet)

HYUNDAI STEEL
당진제철소 : 충남 당진시 송악읍 고대리 167-32
Godae-Ri, Songak-Eup, Dangjin, Chungnam, Korea

ORIGINAL

주문번호 Order No.	: F121100070				
품 명 Commodity	: Hot Rolled Steel Plate	고객사 Customer	: EDMONTON STEEL PLATE	증명서 번호 Certificate No.	: 20130103-PS-076-03
제품규격 Specification	: ASME SA516-70 MT LTV	주문자 Contractor	: HYUNDAI CORPORATION	발행일자 Date of Issue	: 2013-01-03

제품번호 Product No.	Position	경도시험 Hardness Test HB
FA29860901	T	152.7
FA29860902	T	152.7
*** Sub Total(008) *** 6 98,442(LBS)		
*** Heat Treatment : Normalized : 1634.0°F 46 Min.		
*** Grade Total *** 116 940,932(LBS) Ceq. G = C + Mn/6 + (Ni + Cu)/15 + (Cr + Mo +V)/5		
*** Last Item ***		

MTR APPROVED
EDMONTON EXCHANGER

NOTE

* ALL MATERIALS HAVE BEEN PRODUCED AS PER ASME SECTION II PART A SA 516-70 MT LTV + SA20 AS WELL AS SECTION VIII DIV.1 - 2010 EDITION.
* The plate is fully killed and fine grained steel. Basic oxygen process and Vacuum degassing process were applied.
Applicable Code is ASME Section II Part A 2010 Edition. The Certificate has been issued in compliance with EN 10204 (2004) 3.1.

상기의 제품은 검사의 결과 지정된 규격에 합격한 것을 증명합니다.
WE HEREBY CERTIFY THAT THE MATERIAL HAS BEEN MADE AND TESTED IN ACCORDANCE WITH THE ABOVE SPECIFICATION AND THE REQUIREMENTS

Signature S. B. Park
SURVEYOR TO CHIEF OF QUALITY ASSURANCE TEAM

* 본 검사증명서는 원본인 전자문서(전자서명 정보 포함)로부터 출력된 사본입니다. 전자문서의 내용은 현대제철 고객포탈에서 확인하실 수 있습니다.(http://sm.hyundai-steel.com/cs/cm/login.jsp)
* This Mill Test Certificate is a copy that has been printed from original electronic document(with digital signing).
You are able to check an original electronic document at hyundaisteel's customer portal.(http://sm.hyundai-steel.com/cs/cm/login.jsp)

5Blue
Process Equipment Inc.

RECEIVING INSPECTION REPORT

DATE: MAY 2 9 2013 **PURCHASE ORDER#** 1108-20

CUSTOMER/OWNER_____

DESCRIPTION OF MATERIAL:	PLATE	TUBE /PIPE	BAR	FITTINGS	

		YES	NO
1	MATERIALS CORRECT TO PURCHASE ORDER:	✓	
2	MTR SUPPLIED WITH MATERIALS	✓	
3	MTR CHECKED AGAINST PACKING SLIP	✓	
4	MTR CORRECT FOR THIS MATERIAL	✓	
5	IS MATERIALS IN GOOD CONDITION (NO DAMAGE):	✓	
6	IS MATERIAL THE SAME SIZE AND SCHEDULE AS REQUIRED ON THE PURCHASE ORDER:	✓	
7	IS MATERIAL THE CORRECT GRADE AS REQUIRED ON THE PURCHASE ORDER	✓	
8	IS THE MATERIAL LEGIBLY MARKED FROM THE SUPPLIER? THIS MAY BE STAMPED or STENCILED (record Grade. Type, Heat # And any other relevant information)	✓	

5Blue Process Equipment Inc. MAY 2 9 2013 Quality Department

NOTE: If any of these inspection steps cannot be completed the inspector shall notify the QS ASAP. The QS shall make out a NCR detailing the discrepancies and the material in question shall be quarantined until a satisfactory solution to the problem can be resolved. This may include rework or sending the material back to the supplier

MAY 2 9 2013

Inspector : ~~ROSEMARY KUNTZ~~ **Signature:** _____ **Date** _____

ROSEMARY KUNTZ
SAFETY / MTR
(780) 955-2040E:226

Trans Am

PIPING PRODUCTS LTD.

Shipped Date
May 27, 2013

Sold To
Blue Process Equipment Inc.
2303 - 8 Street
Nisku, Ab

T9E 7Z3
Ordered By Rob Ph# 780 955-2040

Ship To

Customer P.O.#	Job# / Tag#	T/A Sales Order #
P6889-5B1108-20		E13 - 27356

Shipping Instructions	Freight	Date Ordered
DELIVER TODAY PLEASE		May 27, 2013

Item	Description	Qty.Ord.	Um	Qty.Ship.	Backorder	Heat #	Mnf
1	20" CL 150 BLIND FLANGE RF A350-LF2 CL 1	1	EA	1		292444	SE

Total MTR's Listed 1

Manufacturer's Legend & Alberta CRN #

SE San Eng Steel Forging Co. Ltd.
OB1294.52 Exp. Jan 2023

Blue Process Equipment Inc. MAY 29 2013 Quality Department

RECEIVED MAY 27 2013

Weight Shipped	Skid	Crate	Sack	Box	Loose	Loose Pipe	Pipe Bundle	Misc.	Trans Am Representative
269 Lbs.	1								Matthew (Moe) O'Donnell

is a Registered Trademark of
Trans Am Piping Products Ltd.

Packing List / MTR Summary

1711 - 66th. Avenue, Edmonton, Alberta T6P 1Y9
Ph# (780) 440-4567 Fax# (780) 440-1488

PO# P6889-5B1108-20 Item# 1
Heat Number: 292444 Products Ltd. - Rev'd By: SB
Trans Am Piping
Shipment/Seq #: S12 - 1451 38

20" CL 150 BLIND FLANGE RF
A350-LF2 CL 1

SAN ENG STEEL FORGING CO LTD
311, Jen Hsin Road, Jen Wu District
Kaohsiung, Taiwan, R.O.C.
TEL:07-3724249 ; FAX:07-3712923
URL: www.saneng.com.tw
e-mail: saneng@ksts.seed.net.tw

MILL TEST CERTIFICATE

EN10204-3.1.B(DIN50049/3.1.B)
Customer: SEYBOLD INTERNATIONAL CORP.
Order No.: 7005057(2)-T/A

Certificate No.: SE-5057B
Date: 05/11/2012

PRODUCT	MATERIAL SPECIFICATIONS	DIMENSIONAL SPECIFICATIONS
FORGED CARBON STEEL FLANGES	ASTM A350 LF2-11 CL.1/ASME SA350 LF2-11 CL.1	ASME B16.5-09 CSA Z245.12

Item No.	CODE NO	DESCRIPTION	QUANTITY	CHEMICAL COMPOSITION (%) C	Si	Mn	P	S	Cu	Cr	Ni	Mo	V	Nb	N			CE(*3)
		Min		-	0.150	0.600	-	-	-	-	-	-	-	-	-			
		Max		0.300	0.300	1.350	0.035	0.040	0.400	0.300	0.400	0.120	0.080	0.020	-			
1		300 WNRF S80 10" LF2	5 PCE	0.220	0.200	1.210	0.014	0.006	0.006	0.010	0.010	0.002	0.005	0.001	0.006			0.425
2		900/1500 WNRF XS 1" LF2	50 PCE	0.200	0.200	1.000	0.007	0.012	0.120	0.070	0.070	0.005	0.003	0.005	0.009			0.394
3		900/1500 WNRF XS 1 1/2" LF2	10 PCE	0.222	0.240	1.010	0.015	0.014	0.022	0.063	0.122	0.009	0.015	0.005	0.003			0.414
4		900/1500 WNRF XXS 2" LF2	25 PCE	0.200	0.210	1.110	0.012	0.003	0.100	0.060	0.050	0.011	0.010	0.001	0.008			0.409
5		150 BLRF 16" LF2	6 PCE	0.210	0.220	1.120	0.020	0.008	0.007	0.020	0.010	0.002	0.003	0.001	0.009			0.402
6		150 BLRF 20" LF2	3 PCE	0.200	0.210	1.130	0.019	0.006	0.120	0.110	0.060	0.030	0.010	0.002	0.008			0.428
7		300 BLRF 20" LF2	5 PCE	0.210	0.220	1.150	0.017	0.006	0.005	0.010	0.010	0.001	0.004	0.001	0.007			0.405
8		900 BLRF 12" LF2	2 PCE	0.210	0.220	1.150	0.017	0.006	0.005	0.010	0.010	0.001	0.004	0.001	0.007			0.405
9		600 WNRTJ XXS(SC) 2" LF2	41 PCE	0.220	0.210	1.140	0.014	0.002	0.007	0.030	0.010	0.007	0.003	0.001	0.006			0.419
10		600 WNRTJ XXS(SC) 6" LF2	5 PCE	0.220	0.220	1.150	0.023	0.005	0.006	0.020	0.010	0.002	0.004	0.001	0.002			0.417

Item No.	Heat No.	T.S.(*1) (MPA)	Y.S.(*1) (MPA)	E.L.(*1) (%)	Hardness (HB)	R.A.(*1) (%)	Impact Test Temp: -46°C Minimum: 20.0 Joule 1	2	3	Material Supplier
Min		485.0	250.0	22.0	-	30.0				
Max		655.0	-	-	197	-				
1	4499547	533.5	391.3	33.2	154/152	71.3	95.0	38.0	94.0	ACOMINAS
2	10939	499.2	296.2	40.0	153/150	67.7	25.0	29.0	21.0	OEMK
3	931232	517.8	339.3	32.2	157/154	64.0	35.0	38.0	27.0	NTMK
4	80400	531.5	377.6	35.6	154/150	71.3	121.0	97.0	107.0	WEI CHIH STEEL
5	4401629	515.8	365.8	34.0	148/151	69.5	65.0	77.0	86.0	ACOMINAS
6	292444	539.4	389.3	35.6	156/154	71.3	33.0	81.0	95.0	SEAH BESTEEL
7	4411032	527.6	399.1	37.0	152/154	74.6	92.0	96.0	77.0	ACOMINAS
8	4411032	527.6	399.1	37.0	152/154	74.6	92.0	96.0	77.0	ACOMINAS
9	4390797	513.9	345.2	35.4	149/151	69.5	90.0	61.0	88.0	ACOMINAS
10	4423539	521.7	359.9	36.0	153/151	70.4	78.0	98.0	109.0	ACOMINAS

HEAT TREATMENT(*2)
☒ N

REMARKS
890°CX3HRS
CONFORMS WITH NACE MR0103-10 AND NACE MR0175/ISO15156.2-09
CONFORMS WITH Z245.12 CAT II GR.248 SOUR SERVICE-09(FOR USE AS WELDING NECK AND BLIND FLANGES ONLY)
TEST SPECIMEN SIZE: 10X10
TEST SPECIMEN ORIENTATION: TRANSVERSE
IMPACT TEST TEMP.: -46°C

*1: T.S. = Tensile Strength, Y.S.=Yield Strength, E.L.=Elongation, R.A.=Reduction of Area.

*2: N=Normalized, A=Annealed, Q=Quenched, T=Tempered, S.T=Solution Treated, S.R=Stress Relieved, A.C=Air Cooled, F.C=Furance Cooled, W.C=Water Cooled, O.C=Oil Cooled.

*3: C.E. Value = C + (Mn /6) + (Cr + Mo +V) / 5 + (Ni + Cu) / 15

We hereby certify that the material has been tested in accordance with the above specification and also with the requirements called for by the above order.

SAN ENG STEEL FORGING CO., LTD. ★ QUALITY ASSURANCE DEP'T ★

Manager of Quality Assurance Dep't

5 Blue Process Equipment Inc. MAY 29 2013 Quality Department

5Blue
Process Equipment Inc.

RECEIVING INSPECTION REPORT

DATE: JUN 0 4 2013 PURCHASE ORDER# 1108-20

CUSTOMER/OWNER Lifting Lugs

DESCRIPTION OF MATERIAL:	PLATE	TUBE /PIPE	BAR	FITTINGS	

		YES	NO
1	MATERIALS CORRECT TO PURCHASE ORDER:	✓	
2	MTR SUPPLIED WITH MATERIALS	✓	
3	MTR CHECKED AGAINST PACKING SLIP	✓	
4	MTR CORRECT FOR THIS MATERIAL	✓	
5	IS MATERIALS IN GOOD CONDITION (NO DAMAGE):	✓	
6	IS MATERIAL THE SAME SIZE AND SCHEDULE AS REQUIRED ON THE PURCHASE ORDER:	✓	
7	IS MATERIAL THE CORRECT GRADE AS REQUIRED ON THE PURCHASE ORDER	✓	
8	IS THE MATERIAL LEGIBLY MARKED FROM THE SUPPLIER? THIS MAY BE STAMPED or STENCILED (record Grade. Type, Heat # And any other relevant information)	✓	

5 Blue Process Equipment Inc. JUN 0 4 2013 Quality Department

NOTE: If any of these inspection steps cannot be completed the inspector shall notify the QS ASAP. The QS shall make out a NCR detailing the discrepancies and the material in question shall be quarantined until a satisfactory solution to the problem can be resolved. This may include rework or sending the material back to the supplier

JUN 0 4 2013

Inspector :_____ Signature: _____ Date _____

ROSEMARY KUNTZ
SAFETY / MTR
(780) 955-2040E:226

3007

Procam Machine & Manufacturing Ltd.

3904 - 84 Ave
Leduc, AB T9E 8M6
Phone: 780-980-3670
Fax: 780-980-3672

Date: May 29/13

Ship To: 5 Blue

Bill To:

Order #: 7639

Purchase Order #: P6890-5B1108-20

Item#	Quantity Ordered	Quantity Shipped	Backorder	Units	Description
1	2	2			Lift lugs - 1" PLx10x10
2					
3					
4					
5					
6					
7					
8					
9					
10					

Receivers Signature:

5 Blue Process Equipment Inc. JUN 04 2013 Quality Department

Thank you for your business!

63048

ORIGINAL

MILL TEST CERTIFICATE

DONGKUK STEEL

Order No. : J11B300125
PO No. : LPP201111003
Commodity : STEEL PLATE
Specification : ASTM A516-70N/ASME SA516-70N
Supplier : DONGKUK INTERNATIONAL,INC.
Customer : JNK STEEL CORP.
Certificate No. : DP3-2-120102-028-004
Date of issue : Jan. 02, 2012

Dimension Unit inch: ", mm: Space	Product No	Quantity	Weight kg	Heat No	Position	Tensile Test GL	Tensile Test YP02 N/mm²	Tensile Test TS N/mm²	Tensile Test EL %	Impact Test Sub	Impact Test -50.8°F V Notch ft*lbf	Hardness HB	Division	C 2	Si 2	Mn 2	P 3	S 3	Cr 3	Ni 2	Cu 2	Mo 3	Nb 3	Ti 3	V 3	T.Al 3	S.Al 3	Remarks
22.22*3048*6096 7/8"X120"X240" *Specimen No :DP06441102-a, DP06441102-c, DP06441102-d, DP06441102-e ** Normalized:910°F,51min	A213571-01,02,03,04		3,242	K1142622	T	1	347	533	28		1:140 2:142 3:159 A:147	147	L P	17 15	38 37	141 143	14 13	4 4	15 14	3 3	1 1	3 1	1 0	2 1	2 2	24 30	0	22RB
	Sub Total (50)	4	12,968																									
22.22*3048*6096 7/8"X120"X240" *Specimen No :DP06455105-a, DP06455105-c, DP06455103-d, DP06455103-e ** Normalized:910°F,51min	A216932-02,03		3,242	S822345	T	1	309	513	30		1:143 2:126 3:137 A:135	146	L P	15 15	32 34	145 143	14 14	4 3	40 32	2 2	2 2	1 2	1 0	1 0	1 1	41	36 0	22RB
	Sub Total (50)	2	6,484																									
25.40*3048*6096 1"X120"X240" *Specimen No :DP06445602-a, DP06445602-c, DP06445602-d, DP06445602-e ** Normalized:910°F,56min	A215816-01,02,03,04		3,704	K1142567	T	1	333	530	27		1:177 2:190 3:178 A:182	150	L P	17 16	37 37	146 145	11 10	2 3	11 12	1 2	1 1	2 0	2 0	2 2	2 2	35 32	0	22RB
	Sub Total (50)	4	14,816																									

* Tensile Test Direction-Transverse
* Impact Test Direction-Longitudinal
* Ceq = C+Mn/6+(Ni+Cu)/15+(Cr+Mo+V)/5
* Supply Condition - Normalized
* Chemical Composition Unit(%) : 2-x100, 3-x1000, 4-x10000

We hereby certify that the material has been made by Basic oxygen process (Vacuum degassed Fully killed steel, Fine grain practice) and satisfactorily tested in accordance with above specification requirements called for by the above order. All materials have been produced as per ASME SECTION II PART A SA516 GR70 MT LTV+SA20 - 2010 EDITION. This Mill Test Certificate has been issued in compliance with EN 10204 3.1

When using the ordered product for other uses, rather than the above specification use, product damage and safety accidents may be caused.

* Specimen No. : a-Tension, c-Impact, d-Hardness, e-Product Analysis.
* Position : T-Top, M-Middle, B-Bottom
* Division : L-Ladle Analysis, P-Product Analysis
* Sub(Sub Size, Real Value, mm) : Blank-Full Size, 1-7.5*10, 2-5.0*10
* GL(Gauge Length, mm) : 1-200, 2-100, 3-80, 4-70, 5-50, 6-5.65√A, 7-5d, 8-4d, 9-Bd
* T(S).Al : Total(Soluble) Al *Tr : Trace
* NRL Result : G-No Break, B-Break
* TTP(Through Thickness Position) : 1-Surface, 2-1/4T, 3-1/2T

5 Blue Process Equipment Inc. JUN 04 2013 Quality Department

Surveyor to | Surveyor to | Surveyor to | Surveyor to | Chief of Quality Control Team

Danglin Works. 400 Hanjin-ri, Songak-myeon, Danglin-gun, Chungcheongnam-do. 343-823, Korea

ORIGINAL

5Blue
Process Equipment Inc.

RECEIVING INSPECTION REPORT

DATE: JUN 0 3 2013 **PURCHASE ORDER#** 1108-20

CUSTOMER/OWNER_____

DESCRIPTION OF MATERIAL:	PLATE	TUBE /PIPE	BAR	FITTINGS	

		YES	NO
1	MATERIALS CORRECT TO PURCHASE ORDER:	✓	
2	MTR SUPPLIED WITH MATERIALS	✓	
3	MTR CHECKED AGAINST PACKING SLIP	✓	
4	MTR CORRECT FOR THIS MATERIAL	✓	
5	IS MATERIALS IN GOOD CONDITION (NO DAMAGE):	✓	
6	IS MATERIAL THE SAME SIZE AND SCHEDULE AS REQUIRED ON THE PURCHASE ORDER:	✓	
7	IS MATERIAL THE CORRECT GRADE AS REQUIRED ON THE PURCHASE ORDER	✓	
8	IS THE MATERIAL LEGIBLY MARKED FROM THE SUPPLIER? THIS MAY BE STAMPED or STENCILED (record Grade, Type, Heat # And any other relevant information)	✓	

5 Blue Process Equipment Inc. JUN 0 3 2013 Quality Department

NOTE: If any of these inspection steps cannot be completed the inspector shall notify the QS ASAP. The QS shall make out a NCR detailing the discrepancies and the material in question shall be quarantined until a satisfactory solution to the problem can be resolved. This may include rework or sending the material back to the supplier

JUN 0 3 2013

Inspector :_____ **Signature:** _____ **Date** _____

ROSEMARY KUNTZ
SAFETY / MTR
(780) 955-2040E:226

Trans Am

PIPING PRODUCTS LTD.

Shipped Date
May 29, 2013

Sold To
lue Process Equipment Inc.
2303 - 8 Street
Nisku, Ab

T9E 7Z3
Ordered By Troy Ph# 780 955-2040

Ship To

Customer P.O.#	Job# / Tag#	T/A Sales Order #
P6910-5B1108-20		E13 - 27638

Shipping Instructions	Freight	Date Ordered
DELIVER WED SHIP & B/O		May 28, 2013

Item		Description	Qty.Ord.	Um	Qty.Ship.	Backorder	Heat #	Mnf
1	4"	CL 150 W/N FLANGE RF SCH 160 BORE A350-LF2 CL 1	1	EA	1		4625140	SE
2	4"	XH LR 90 BW ELBOW A234-WPB	1	EA	1		3A424V	RIG
3	2"	CL 150 W/N FLANGE RF SCH 160 BORE A350-LF2 CL 1	1	EA	1		31159	WG
4	2"	SCH 160 LR 90 BW ELBOW A420-WPL6	1	EA	-	1		
	4"	SCH 160 SEAMLESS CS PIPE A333 GR 6 B.E. - S.R.L.	20	FT	21.16		11603075	YL
6	2"	"	20	FT	19.02		600324	HV
7	2"	CL 3000 FS SCRD HALF (1/2) COUPLING A350-LF2	1	EA	1		19CK	IML

Total MTR's Listed 6

Manufacturer's Legend & Alberta CRN #

HV Hengyang Valin Steel Tube

IML Industria Meccanica Ligure SpA
OA9221.52 Exp. Feb 2014

Blue Process Equipment Inc. JUN 03 2013

Continued Next Page

Weight Shipped	Skid	Crate	Sack	Box	Loose	Loose Pipe	Pipe Bundle	Misc.	Trans Am Representative
Lbs.				1			1		Matthew (Moe) O'Donnell

is a Registered Trademark of
Trans Am Piping Products Ltd.

Packing List / MTR Summary

1711 - 66th. Avenue, Edmonton, Alberta T6P 1Y9
Ph# (780) 440-4567 Fax# (780) 440-1488

PO# P6910-5B1108-20 Item# 1
Heat Number: 4625140
Trans Am Piping Products Ltd. - Rev'd By: SB
Shipment/Seq #: S13 - 1311 6

4" CL 150 W/N FLANGE RF
SCH 160 BORE A350-LF2 CL 1

SAN ENG STEEL FORGING CO LTD
311, Jen Hsin Road, Jen Wu District
Kaohsiung, Taiwan, R.O.C.
TEL:07-3724249 ; FAX:07-3712923
URL: www.saneng.com.tw
e-mail: saneng@ksts.seed.net.tw

MILL TEST CERTIFICATE

EN10204-3.1.B(DIN50049/3.1.B)

Customer: TRANS AM PIPING PRODUCTS LTD.

Order No.: 7006322(2)-T/A

Certificate No.: SE-6322B
Date: 04/22/2013

PRODUCT	MATERIAL SPECIFICATIONS	DIMENSIONAL SPECIFICATIONS
FORGED CARBON STEEL FLANGES	ASTM A-350 LF2-11 CL.1/ASME SA-350 LF2-11 CL.1	ASME B16.5-09 CSA Z245.12

Item No.	CODE NO	DESCRIPTION	QUANTITY	CHEMICAL COMPOSITION (%) C	Si	Mn	P	S	Cu	Cr	Ni	Mo	V	Nb	N			CE(*3)
			Min	-	0.150	0.600	-	-	-	-	-	-	-	-	-			
			Max	0.300	0.300	1.350	0.035	0.040	0.400	0.300	0.400	0.120	0.080	0.020	-			
1		150 WNRF S160 3/4" LF2	10 PCE	0.210	0.210	1.110	0.013	0.006	0.160	0.050	0.060	0.013	0.009	0.009	0.005			0.424
2		150 WNRF S160 4" LF2	45 PCE	0.200	0.200	1.170	0.021	0.007	0.006	0.040	0.010	0.002	0.005	0.001	0.007			0.405
3		150 WNRF XXS 2" LF2	66 PCE	0.220	0.230	1.170	0.019	0.006	0.007	0.010	0.010	0.002	0.006	0.001	0.007			0.420
4		150 WNRF XXS 2" LF2	9 PCE	0.222	0.240	1.010	0.015	0.014	0.022	0.063	0.122	0.009	0.015	0.005	0.003			0.417
5		300 WNRF S160 2" LF2	196 PCE	0.210	0.230	1.160	0.018	0.003	0.006	0.020	0.010	0.003	0.005	0.001	0.007			0.410
6		300 WNRF S160 2" LF2	4 PCE	0.220	0.220	1.180	0.016	0.006	0.007	0.020	0.020	0.005	0.005	0.001	0.007			0.424
7		300 WNRF XXS 1 1/2" LF2	9 PCE	0.200	0.280	1.110	0.011	0.006	0.060	0.060	0.040	0.015	0.003	0.005	0.010			0.407
8		300 WNRF XXS 2" LF2	25 PCE	0.220	0.220	1.180	0.016	0.006	0.007	0.020	0.020	0.005	0.005	0.001	0.007			0.424
9		600 WNRF S80 20" LF2	3 PCE	0.210	0.200	1.180	0.011	0.006	0.090	0.050	0.040	0.005	0.002	0.001	0.010			0.427
10		600 WNRF S160 4" LF2	75 PCE	0.220	0.240	1.180	0.017	0.005	0.008	0.030	0.010	0.004	0.010	0.001	0.007			0.427

Item No.	Heat No.	T.S.(*1) (MPA)	Y.S.(*1) (MPA)	E.L.(*1) (%)	Hardness (HB)	R.A.(*1) (%)	Impact Test Temp: -46°C Minimum: 20.0 Joule 1	2	3	Material Supplier
Min		485.0	250.0	22.0	-	30.0				
Max		655.0	-	-	197	-				
1	83623	537.4	399.1	34.4	155/153	68.6	90.0	64.0	83.0	WEI CHIH STEEL
2	4625140	527.0	376.0	33.6	153/151	69.5	106.0	69.0	110.0	ACOMINAS
3	4677159	527.0	364.0	33.8	153/70	70.4	116.0	98.0	73.0	ACOMINAS
4	931232	517.8	339.3	32.2	157/154	64.0	35.0	38.0	27.0	NTMK
5	4522439	535.0	368.0	34.0	154/152	71.3	69.0	80.0	75.0	ACOMINAS
6	4603012	529.0	356.0	35.0	153/151	71.3	90.0	51.0	84.0	ACOMINAS
7	37320	519.8	348.1	34.2	150/150	65.9	23.0	29.0	25.0	OEMK
8	4603012	529.0	356.0	35.0	153/151	71.3	90.0	51.0	84.0	ACOMINAS
9	24635	537.0	380.0	35.6	154/152	69.5	47.0	44.0	36.0	EVRAZ ZSMK
10	4609477	539.0	358.0	31.0	154/151	66.8	86.0	87.0	99.0	ACOMINAS

HEAT TREATMENT(*2)
☒ N

REMARKS
890°CX3HRS
CONFORMS WITH NACE MR0103-12 AND NACE MR0175/ISO15156.2-09 CLAUSE 7.2.1.4 REGION 3 AND ANNEX A.
CONFORMS WITH Z245.12 CAT II GR248 SOUR SERVICE-09 (FOR USE AS WELDING NECK AND BLIND FLANGES ONLY)
TEST SPECIMEN SIZE: 10X10
TEST SPECIMEN ORIENTATION: TRANSVERSE
IMPACT TEST TEMP.: -46°C

*1: T.S. = Tensile Strength, Y.S.=Yield Strength, E.L.=Elongation, R.A.=Reduction of Area.

*2: N=Normalized, A=Annealed, Q=Quenched, T=Tempered, S.T=Solution Treated, S.R=Stress Relieved, A.C=Air Cooled, F.C=Furance Cooled, W.C=Water Cooled, O.C=Oil Cooled.

*3: C.E. Value = C + (Mn /6) + (Cr + Mo +V) / 5 + (Ni + Cu) / 15

SAN ENG STEEL FORGING CO., LTD. QUALITY ASSURANCE DEP'T. SE 76.C.J

We hereby certify that the material has been tested in accordance with the above specification and also with the requirements called for by the above order.

Manager of Quality Assurance Dep't

5 Axis Process Equipment Inc. JUN 03 2013 Quality Department

4" XH LR 90 BW ELBOW A234-WPB

PO# P6910-5B1108-20 Item# 2
Heat Number: 3A424V
Trans Am Piping Products Ltd. - Rev'd By: SB
Shipment/Seq #: S13-1230 16

INSPECTION CERTIFICATE

RIGID INDUSTRIES CO., LTD.

8. MEI-CHUNG RD. NIAO-SONG,
KAOHSIUNG 83301,TAIWAN
TEL: 886-77310527~8
FAX: 886-77315887

PURCHASER : SEYBOLD INT'L CORP.

STANDARD : ASTM A234 WPB-11
ASME SA234 WPB-04
CSA Z245.11-09 Gr.241 CAT I Sour Service

MATERIALS : ASTM A106 Gr.B

INSP. SPEC. : ASME B16.9 -07

DATE: 2013-04-01

ORDER NO: 7006134/CI-12-500

P.I. NO: 2I02-3

CERTIFI. NO: 13034

ACCORDING TO EN10204/DIN50049/3.1

ITEM NO.	PRODUCT & SIZE	QUANTITY PCS	MFG NO.	VISUAL & DIMENTIONAL INSPECTION	HARDNESS MAX. 197 HB	HEAT TREATMENT (NOTE)	MAGNETIC PARTICLE EXAMINATION	
5	ELL 45 LR 4" XH	125	3A844V	GOOD	131-132	A		
6	ELL 45 LR 10" STD	13	2L146V	GOOD	136-145	A		
7	ELL 45 LR 10" STD	12	2D6379	GOOD	133-133	A		
8	ELL 90 LR 2" XH	1200	3A3680	GOOD	127-133	A		
9	ELL 90 LR 4" XH ←	1000	3A424V	GOOD	130-139	A		
10	ELL 90 LR 3X2" STD	30	2L256V	GOOD	119-121	N		
11	ELL 90 LR 4X3" STD	20	2E5254	GOOD	126-132	N		
12	TEE 2" XH	450	2L584V	GOOD	134-142	N	GOOD	
13	TEE 4" STD	125	2J1404	GOOD	132-140	N	GOOD	
14	RED-TEE 4X3" STD	75	2L1101	GOOD	126-133	N	GOOD	

ITEM NO.	MATERIAL CHARGE NO.		CHEMICAL COMPOSITION %										* PHYSICAL TEST				
			C x100	Si x100	Mn x100	P x1000	S x1000	Cu x100	Ni x100	Cr x100	Mo x100	V x100	Nb x1000	Y S KSI	T S KSI	E %	**	C.E. X100
	STANDARD	MIN.		10	29									35.0	60.0			
		MAX.	30	35	135	50	58	40	40	40	15	8	20		95.0			50
5	1226774V		17	23	86	12	3	5	4	5	5	<1	2	45.5	67.7	31.6	L	34
6	1215566V		15	23	82	14	7	7	2	4	<1	<1	1	42.4	67.6	30.5	L	30
7	203379		15	25	69	10	6	9	2	3	1	1	2	41.4	62.7	35.2	L	28
8	323180		19	25	56	5	2	4	3	5	1	<1	<1	43.0	66.9	31.3	L	30
9	1226774V		17	23	86	12	3	5	4	5	5	<1	.2	45.5	67.7	31.6	L	34 ←
10	1223536V		14	24	85	11	6	7	2	5	1	<1	1	42.8	64.0	30.6	L	30
11	319954		18	24	54	10	4	6	7	7	2	<1	<1	43.2	67.3	31.3	L	30
12	1223544V		17	20	81	9	5	7	2	9	9	<1	1	45.0	66.9	30.2	L	35
13	420204		16	23	68	9	7	9	4	8	2	<1	<1	44.8	68.0	32.0	L	30
14	420201		15	24	69	10	5	7	4	7	2	<1	<1	44.5	70.0	32.2	L	29

(NOTE):A:HOT FORMED WITH FINAL TEMPERATURE BETWEEN 620℃-980℃,AIR COOLING.
N:NORMALIZING AT TEMPERATURE 880℃ X0.5HR,AIR COOLING.
NACE MR-01-75-09/ISO15156.2 ,NACE MR 0103-10:SATISFACTORY

WE HEREBY CERTIFY THAT THE PRODUCT DESCRIBED HEREIN HAS BEEN MANUFACTURED IN ACCORDANCE WITH THE SPECIFICATIONS CONCERNED AND ALSO WITH THE PURCHASER'S REQUIREMENTS AND THAT THE TEST RESULTS SHOWN HEREIN ARE CORRECT.

* TYPE OF SPECIMEN:STRIP(WIDTH:1 in./GAUGE LENGTH:2 in.) ** SAMPLING DIRECTION:L=LONGITUDINAL T=TRANSVERSE

Ou L Lan

MANAGER OF Q.A. DEPT.

Blue Process Equipment Inc. JUN 03 2013 Quality Department

PO# P6910-5B1108-20 Item# 3

HEAT NUMBER : 31159
TRANS AM PIPING PRODUCTS - REV'D BY:
P.O. # /Seq #: L-04 - 12219 1

2" 150# W/N FLANGE RF SCH 160
BORE A350-LF2

Abnahmeprüfzeugnis Nr.
Inspection Certificate No.
Certificate de Réception No.

141397 vom 23.04.04 EN 10 204 - 3.1B

TÜV CERT
DIN EN ISO 9001:2000
Zertifikat Nr. GA224

Wilhelm Geldbach Industrie

PED 97/23/EC An.I Kap.4.3
(RWTÜV-0044)
AD2000-WO / TRD100

Zeichen des Herstellerwerkes
Manufacturer's mark/Poincon d'usine
Zeichen des Werksachverständigen
Inspector's stamp/Poincon de l'expert

Wilhelm Geldbach Industrie GmbH
Ziegelstraße 17
D - 45886 Gelsenkirchen
Telefon: +49 209 15803 22
Telefax: +49 209 15803 499
Email : Q-BOW-G.DE

Wilhelm Geldbach Industrie GmbH Ziegelstraße 17 45884 Gelsenkirchen

W.F.F. FITTINGS&FLANGES
(CANADA) LTD.
7004K - 5TH STREET S.E.

CDN CALGARY,ALBERTA T2H 2G9

Komm.-Nr/Pos. Works-No. Rapport-No.	Rechnungs-Nr/Pos Invoice-No. Facture-No.	Ihre Auftrags-Nr Your order-No. Votre Commande-No.	Lieferdatum Delivery date Date de livraison
227023/210	50023/210	E04122DD	23.04.04

Lieferplan/Pos Delivery Note Bon de livraison	Menge Quantity Quantité	Bezeichnung des Gegenstandes Designation of article Désignation du produit
92160/012	24	WN 150LB B16.5 2 RF SCH160

Werkstoff: LF2 CL.1, ASTM A350
Material / Matière

Zugversuch
Tensile test / Traction

Probe-Nr. Test-No. No d'essai	Richtung Direction Direction	Streckgrenze (Re) Yield strength Limite elastique Rp 1% N/mm2 Reh/Rp 0.2%	Zugfestigkeit (Rm) Tensile strength Resistance à la traction N/mm2	Dehnung (A) Elongation Allongement %	Einschnürung (Z) Reduction of area striction %	Kerbschlagbiegeversuch Impact test/Essai de flexion par choc Form Type Type	Temp. Temp. Temp. °C	Schlagarbeit KV Energie of impact Energie de rupture J
1297	L	385	519	2in. 30	75	ISO-V	-50	082 080 084
297B	L	397	532	2in. 28	73	ISO-V	-50	097 100 065

Härteprüfung / Hardness / Dureté: HBW 2.5/187.5 = 150 - 160

Schmelze Heat-No./No. de coulée	Code-Nr. Code-No./ Code de coulée	Erschmelzungsart Melting proc./Procedé d' élaboration
31159		E

Steelmaker: RUBIERA

Schmelzanalyse %
Heat analysis / Analyse sur coulée

C	Si	Mn	P	S	Cr	Mo	Ni	Al	Ti	N	Cu	V	Nb	B	Ceq
,16	,20	1,15	,011	,004	,16	,04	,10	,027			,20	,003	,007		,432

(Ceq = C + Mn/6 + (Cr+Mo+V)/5 + (Cu+Ni)/15)

Anforderungen - Lieferzustand
Requierments / Spécifications - Delivery condition / Etat de livraison
NACE MR0175-2003 / HARDNESS <=22HRC / NI <1%
NORMALIZED 910 DEGR. C/AIR
IN ACC. TO ASME IIA SA350-02
ASTM A350-02 / ASME IIA SA350-02, ZUGELASSEN NACH VDTÜV 488
ASTM A350, SA350

Besichtigung und Maßkontrolle: o.B. / Visual and dimensional check: o.o. / Controle visual et dimensionnel satisfaisant
Die gestellten Anforderungen sind erfüllt. / The requirements are fulfilled. / Les conditions imposées sont satisfaites.

Der Werksachverständige / Work inspector / L'expert de l'usine
Bruchereeifer / Bungard / Scheideler

EDV - Zeugnis / EDI Test Certificate

5 Blue Process Equipment Inc.
JUN 03 2013
Quality Department

I.M.L. - INDUSTRIA MECCANICA LIGURE S.P.A.
Via Giancarlo Farina, 25 - 16030 Casarza Ligure - GE - ITALY
Tel. +39 0185 467661 - Fax +39 0185 466510 - E-mail quality.iml@farinagroup.com
MATERIAL TEST DEPARTMENT

COMPANY WITH QUALITY SYSTEM ISO 9001: 2008 CERTIFIED BY RINA CERT. N°23/91/S

INSPECTION CERTIFICATE EN 10204:2004 / 3.1

Nr 22603 Dated 23.12.2011

TRANS AM PIPING PRODUCTS LTD.

9335 Endeavor Drive S.E.
Calgary, Alberta T3S 0A1 CA

Purchase Order Nr	3840
Item Nr	038
Packing List Nr	1508
Invoice Nr	1312

Heat Code	Heat Nr	Quantity	Description
19CK	77168		FITTING HALF COUPL THRD NPT 3M 2" A350/LF2

Element	C	Si	Mn	S	P	Cr	Ni	Mo	Ti	Cu
ASTM A350 LF2 cl.1 (LADLE)	0,200	0,250	1,000	0,010	0,009	0,080	0,050	0,010	0,007	0,180

Element	V	Nb	N	AL	C.E.	PRE
ASTM A350 LF2 cl.1 (LADLE)	0,001	0,001	--	0,029	0,400	--

Test specimen Sect. mm2	Test specimen Lenght mm	Shape 1=O - 2=□	Tensile N/mm2	Yeld Point >0,2% N/mm2	Yeld Point >1% N/mm2	Elongation %	Reduction of area %
122,65	50,00	1	534,0	308,0	--	33,2	55,0

HARDNESS HBW	IMPACT TEST TYPE	Test specimen	°C	1-Joule/cm2	2-Joule/cm2	3-Joule /cm2
158,0 - 161,0	KV	10x10mm	-46	53	52	52

Heat treatment	Normalized at 900°C / Air Cool	ELECTRIC FURNACE
Dimension in accordance	ASME B16.11 Ed.2009 - ANSI/ASME B1.20.1 Ed.1992 - MSS SP25 Ed.2008 - NACE MR 0175 ISO 15156 Ed.2009- NACE MR 0103 Ed. 2010 - SUPPLIED MATERIAL MEETS SPECIFICATIONS AND P.O. REQUIREMENTS	
Material in accordance	ASME SA ASTM A350-07 Gr. LF2 cl.1	

Visual & Dimensional	SATISFACTORY	Origin	EUROPE	Our Ref.	091066

Notes ---

Blue Process Equipment Inc. JUN 03 2013 Quality Department

QUALITY CONTROL DEPT.	INSPECTION AUTHORITY	MANUFACTURER'S SYMBOL
Boris Fizzotti		IML or

Forged Vessel Connections, Canada Limited
(a subsidiary of AmeriForge Group Inc.)
7410A-5 Street S.E., Calgary, Alberta T2H-2L9
Phone (403) 255-9011 or toll free (800) 382-3490
Fax 403-255-7239
www.ameriforgegroup.com/fvc/

Packing List

Shipper ID: SHPR13688
Ship Date: 05/16/13
Print Date: 05/16/13

SOLD TO: 00011689
5BLUE PROCESS EQUIPMENT
2303 - 8th STREET
NISKU, AB T9E 7Z3
Canada

SHIP TO: 00011689
5BLUE PROCESS EQUIPMENT
2303 - 8th STREET
NISKU, AB T9E 7Z3
Canada

Ship Via: CDN FREIGHTWAYS FOB Point: Ex Works	Mode of Transportation: Carrier Shipment Refer: SHPR13688	Customer Contact: Phone:
Bill of Lading #:	Remarks:	Salesman:

Line #	Item# / Description	Cust. PO# / SO#-Ln #	Heat Code	UM	HC Qty Shipped	Qty. Ordered	Qty. BO	Qty. Shipped / Cum. Shipped
3	LWN0203001 00A004A1	P6573-5B1100-20		EA				6.00 6.00
	2-300-10-1-1-4	C12707-4				6.0	0	
			C949BN		6.0			
	LWN,SA350LF2,300#,2x10",RF&D N7A, N9A, N9C, N10, N12, N14 *** MTRs INCLUDED WITH SHIPMENT ** ACCT #121-1019911							
4	LWN0203001 20A004A1	P6573-5B1100-20		EA				3.00 3.00
	2-300-12-1-1-4	C12707-3				3.0	0	
	LWN,SA350LF2,300#,2"x12",RF							
			C949BN		3.0			
	N7B, N9B, N11							

Shipment Weight Summary

Description	Quantity	Net Weight	Tare Weight	Gross Weight	Weight UM
4-300-9-2N-1-4	1.0	69.339	0.0	69.339	LB
4-300-16-2N-1-4	1.0	115.0	0.0	115.0	
2-300-10-1-1-4	6.0	126.0	0.0	126.0	
2-300-12-1-1-4	3.0	73.5	0.0	73.5	LB
		383.839	0.0	383.839	

QC DEPT
SELECT
VERIFIED BY:

Packed By: _____ **Loaded By:** _____ **Verified By:** _____

MTR

Material Test Report

FVC Heat Nbr: C949BN

ISO 9001:2008 Certified

FVC Canada Ltd.
An Ameriforge Group Company
7410A-5 Street S.E. Calgary, Alberta T2H-2L9
Sales: (403) 255-9011 Fax: (403) 255-7239

5BLUE PROCESS EQUI 00011689	PO: P6573-5B1100-20	Sales Order: C12707	Line: 4
2303 - 8th STREET	Item Code: LWN020300100A004A1	Qty: 6	
T9E 7Z3 NISKU, AB	Item Desc: 2-300-10-1-1-4 LWN,SA350LF2,300#,2"X10"		
CA		Mill Heat: A123109	
Spec: ASME SA350-LF2-CL1: 2010 Edition; 2011 Addenda			

Element	(%wt)	Ladle	Product	EPCRA	CAS#
C	Carbon	0.19			
Mn	Manganese	1.14		✓	7439-96-5
P	Phosphorous	0.006			
S	Sulphur	0.008			
Si	Silicon	0.21			
Cu	Copper	0.19		✓	7440-50-8
Ni	Nickel	0.10		✓	7440-02-0
Cr	Chromium	0.10		✓	7440-47-3
Mo	Molybdenum	0.04			
V	Vanadium	0.025			
Cb	Columbium (N	0.001			

Element	(%wt)	Ladle	Product	EPCRA	CAS#
Sn	Tin	0.009			
Ti	Titanium	0.001		✓	7440-02-0
Al	Aluminum	0.027			
Ca	Calcium	0.0014			
N	Nitrogen	0.0082			
As	Arsenic	0.006		✓	7440-38-2
Sb	Antimony	0.003		✓	7440-36-0
CE	C+Mn/6+(Cr+M	0.43			
Cu+Ni+Cr+Mo+V		0.46			
Cr+Mo		0.14			

Mechanical Testing

Test Lab	AMF 53442
BHN	143 - 143
Elg (%)	35.0
RA (%)	71.0
Tensile (ksi)	73.01
Yield (ksi)	43.63
Specimen Orientation	Longitudinal
Charpy (ft-lbs)	40 - 64 - 54
Charpy Temp (F)	-50
Avg Energy 3 Specimens (ft-lbs)	53
Min Energy 1 Specimens (ft-lbs)	40
Shear (%)	20-30-20
LatExp(Mils)	35-57-47

Heat Treat

Heat Treatment	Normalized

Other

Country of Origin	USA
Manufactured In	USA
Production Method	EAF-VTD
Fully Killed	YES
Gr.Sz.	7
Made to Fine Grain Practice	YES

5BLUE QC DEPT
CHEM SELECT
VERIFIED BY:

MATERIAL MEETS NACE MR0175 & MR0103 LATEST EDITIONS. CE=C+(Mn/6)+({Cr+Mo+V}/5)+({Ni+Cu}/15), Elongation in 2" round specimen. YIELD STRENGTH MEASURED AT 0.2% OFFSET.
FVC STANDARD MANUFACTURING PRACTICES:
1) FLANGE DIMENSIONS & BOLTING COMPLY - ASME B16.5.
2) SELF-REINFORCING NOZZLES COMPLY WITH SPECIFICATION OF SECTION VIII DIV. 1 OR DIV. 2 PER CUSTOMER DESIGN/FVC DESIGN.
3) MATERIAL SPECIFICATION COMPLIES WITH ASME SECT. II PART A.
4) ALL FVC MATERIAL MANUFACTURED PER FINE GRAIN PRACTICE.
5) ALL FVC MATERIAL CERTIFIED PER EN 10204 Type 3.1 UNLESS OTHERWISE SPECIFIED.
6) CERTIFICATE OF INSURANCE AVAILABLE UPON REQUEST.
7) PRODUCT FREE OF MERCURY CONTAMINATION.

EPCRA Supplier Notification: This product may contain one or more toxic chemicals subject to the reporting requirements of Section 313 of the Emergency Planning and Community Right-to-Know Act (Title III of the Superfund Amendments and Reauthorization Act of 1986) and 40 C.F.R. Part 372. Potentially reportable chemicals are indicated with a checkmark in the "EPCRA" column and a Chemical Abstract Services (CAS) registry number is provided for each such chemical in addition to the percent by weight of the chemical present in this product. It is your responsibility alone to determine whether your facility is required to submit a Toxic Release Inventory Report under EPCRA Section 313.

Certification No.: 1067851
Certification Date: 5/16/2013
Issued By: Bryun Jantzen

Bryun Jantzen

This report is issued in compliance with the requirements of EN10204 3.1 / ISO 10474 3.1.b

METALFAR
PRODOTTI INDUSTRIALI S.P.A.
STAMPAGGIO A CALDO DI ACCIAI COMUNI - LEGATI E INOSSIDABILI

SEDE AMMINISTRATIVA E STABILIMENTO:
23851 COSANA BRIANZA (LC) - Italy
Via G. Parini, 28
Tel. +39 031.655441
Fax +39 031.655149
quality.mff@farmas.com

COMPANY WITH QUALITY SYSTEM
CERTIFIED BY DNV
= ISO 9001 =

SALA PROVE E ANALISI MATERIALI / MATERIAL TEST DEPARTMENT

CERTIFICATO DI COLLAUDO SECONDO EN 10204 - 3.1 INSPECTION CERTIFICATE

Certif. N. 2568	Del/Dated 04.05.2013	Fattura / Invoice N. 1694	Del/Dated 30.04.2013
DDT / Del Note N. 1937	Del/Dated 30.04.2013	Ns.Ord. / Our ref. N.	Del/Dated

CCTF CORPORATION Division of CMDC	Dest.: MRC-MIDFIELD SUPPLY ULC
5407 - 53 Avenue, N.W.	502 - 25 AVENUE
T6B 3G2 EDMONTON, ALBERTA CA	T9E 0K6 NISKU, ALBERTA CA

COD. COL. / HEAT CODE	COLATA / HEAT	POS. / ITEM	VS.ORDINE / YOUR REFERENCE	Q.TA' / Q.TY	DESCRIZIONE / DESCRIPTION		DIM.IN ACC. A / DIM. ACCORDANCE TO	VISIVO E DIMENS. / VIS. & DIMENS.
	12/70354	113	4810280-00	10,00	BLIND 150 RF 1"	LF2CL1	ASME/ANSI B16.5 -2009	SATISFACTORY

MATERIALE / MATERIAL	C%	Si%	Mn%	S%	P%	Cr%	Ni%	Mo%	Ti%	Cu%	V%	Nb%	N%	Al%	C.E.%	B %
ASTM A350 LF2 CL1/2 (LADLE)	0,185	0,210	1,020	0,010	0,011	0,080	0,060	0,010	0,021	0,160	0,003	0,002	0,000	0,027	0,388	0,000

PROVETTA / TEST SPECIMEN SEZ. mm2 / SECT. mm2	LUNG. mm / LENGHT mm	FORMA / SHAPE 1=○ 2=□	SNERVAMENTO / YIELD POINT N/mm2 >=0,2%	ROTTURA / TENSILE STRENGHT N/mm2 >=	ALLUNGAMENTO / ELONGATION %>=	CONTRAZIONE / REDUCTION OF AREA %>=	DUREZZA / HARDNESS HBW	RESILIENZA / IMPACT TEST - JOULE/cm2 TIPO / TYPE 10x10mm	°C	1	2	3	SNERVAMENTO / YIELD POINT N/mm2 >=1,0%	Ns.Rif. / OUR REF.
126,60	50,80	1	335,0	530,0	31,0	58,0	159,0 - 163,0	KV	-46	69	70	66	0,0	

MATERIALE IN ACCORDO A / MATERIAL IN ACC. TO
ASTM/ASME A 350/SA 350 M - 12 ASME CODE SECT. II, PART A, ED. 2010 ADD. 2011a
CSA Z245.12 GRADE 290 CAT.II SOUR SERVICE

TRATTAMENTO TERMICO / HEAT TREATMENT
NORMALIZED AT 930 C - COOLED IN STILL AIR

FORNO / FURNACE
ELECTRIC FURNACE

ORIGINE / ORIGIN OF STEEL
EUROPEAN UNION

COD. COL. / HEAT CODE	COLATA / HEAT	POS. / ITEM	VS.ORDINE / YOUR REFERENCE	Q.TA' / Q.TY	DESCRIZIONE / DESCRIPTION		DIM.IN ACC. A / DIM. ACCORDANCE TO	VISIVO E DIMENS. / VIS. & DIMENS.
	12/33132	115	4810280-00	18,00	W/N 300 RF 2" 160	LF2CL1	ASME/ANSI B16.5 -2009	SATISFACTORY

MATERIALE / MATERIAL	C%	Si%	Mn%	S%	P%	Cr%	Ni%	Mo%	Ti%	Cu%	V%	Nb%	N%	Al%	C.E.%	B %
ASTM A350 LF2 CL1/2 (LADLE)	0,200	0,240	0,970	0,007	0,011	0,110	0,050	0,010	0,016	0,150	0,001	0,001	0,000	0,026	0,399	0,000

PROVETTA / TEST SPECIMEN SEZ. mm2 / SECT. mm2	LUNG. mm / LENGHT mm	FORMA / SHAPE 1=○ 2=□	SNERVAMENTO / YIELD POINT N/mm2 >=0,2%	ROTTURA / TENSILE STRENGHT N/mm2 >=	ALLUNGAMENTO / ELONGATION %>=	CONTRAZIONE / REDUCTION OF AREA %>=	DUREZZA / HARDNESS HBW	RESILIENZA / IMPACT TEST - JOULE/cm2 TIPO / TYPE 10x10mm	°C	1	2	3	SNERVAMENTO / YIELD POINT N/mm2 >=1,0%	Ns.Rif. / OUR REF.
126,60	50,80	1	346,0	520,0	30,0	59,0	156,0 - 159,0	KV	-46	64	67	66	0,0	

MATERIALE IN ACCORDO A / MATERIAL IN ACC. TO
ASTM/ASME A 350/SA 350 M - 12 ASME CODE SECT. II, PART A, ED. 2010 ADD. 2011a
CSA Z245.12 GRADE 290 CAT.II SOUR SERVICE

TRATTAMENTO TERMICO / HEAT TREATMENT
NORMALIZED AT 930 C - COOLED IN STILL AIR

FORNO / FURNACE
ELECTRIC FURNACE

ORIGINE / ORIGIN OF STEEL
EUROPEAN UNION

NOTE 100% MANUFACTURED IN ITALY
NOTES MANUFACTURING IN ACCORDANCE WITH ORDER AND SPECIFICATION
MATERIAL IN ACCORDANCE WITH NACE MR-0175/2009 ISO 15156-2009 - SOUR SERVICE
MATERIAL IN ACCORDANCE WITH NACE MR-0103/2012 - SOUR SERVICE

UFFICIO CONTROLLO QUALITA' / QUALITY CONTROL DEPARTEMENT	ENTE UFFICIALE DI COLLAUDO / INSPECTION AUTHORITY	MARCHIO PRODUZIONE / MANUFACTURER'S SYMBOL
S. Erigeria		MFF

5Blue
Process Equipment Inc.

RECEIVING INSPECTION REPORT

DATE: JUN 0 3 2013 PURCHASE ORDER# 1108-20

CUSTOMER/OWNER _____

DESCRIPTION OF MATERIAL:	PLATE	TUBE /PIPE	BAR	FITTINGS	

Pipe

		YES	NO
1	MATERIALS CORRECT TO PURCHASE ORDER:	✓	
2	MTR SUPPLIED WITH MATERIALS	✓	
3	MTR CHECKED AGAINST PACKING SLIP	✓	
4	MTR CORRECT FOR THIS MATERIAL	✓	
5	IS MATERIALS IN GOOD CONDITION (NO DAMAGE):	✓	
6	IS MATERIAL THE SAME SIZE AND SCHEDULE AS REQUIRED ON THE PURCHASE ORDER:	✓	
7	IS MATERIAL THE CORRECT GRADE AS REQUIRED ON THE PURCHASE ORDER	✓	
8	IS THE MATERIAL LEGIBLY MARKED FROM THE SUPPLIER? THIS MAY BE STAMPED or STENCILED (record Grade. Type, Heat # And any other relevant information)	✓	

5 Blue Process Equipment Inc. JUN 0 3 2013 Quality Department

NOTE: If any of these inspection steps cannot be completed the inspector shall notify the QS ASAP. The QS shall make out a NCR detailing the discrepancies and the material in question shall be quarantined until a satisfactory solution to the problem can be resolved. This may include rework or sending the material back to the supplier

JUN 0 3 2013

Inspector :_____ Signature: _____ Date _____

ROSEMARY KUNTZ
SAFETY / MTR
(780) 955-2040E:226

Trans Am
PIPING PRODUCTS LTD.

Shipped Date
May 29, 2013

Sold To
Blue Process Equipment Inc.
2303 - 8 Street
Nisku, Ab

T9E 7Z3
Ordered By Troy

Ship To

Ph# 780 955-2040

Customer P.O.#	Job# / Tag#	T/A Sales Order #
P6910-5B1108-20		E13 - 27638

Shipping Instructions	Freight	Date Ordered
DELIVER WED SHIP & B/O		May 28, 2013

Item		Description	Qty.Ord.	Um	Qty.Ship.	Backorder	Heat #	Mnf
1	4"	CL 150 W/N FLANGE RF SCH 160 BORE A350-LF2 CL 1	1	EA	1		4625140	SE
2	4"	XH LR 90 BW ELBOW A234-WPB	1	EA	1		3A424V	RIG
3	2"	CL 150 W/N FLANGE RF SCH 160 BORE A350-LF2 CL 1	1	EA	1		31159	WG
4	2"	SCH 160 LR 90 BW ELBOW A420-WPL6	1	EA	-	1		
	4"	SCH 160 SEAMLESS CS PIPE A333 GR 6 B.E. - S.R.L.	20	FT	21.16		11603075	YL
6	2"	"	20	FT	19.02		600324	HV
7	2"	CL 3000 FS SCRD HALF (1/2) COUPLING A350-LF2	1	EA	1		19CK	IML

Total MTR's Listed 6

Manufacturer's Legend & Alberta CRN #

HV Hengyang Valin Steel Tube

IML Industria Meccanica Ligure SpA
OA9221.52 Exp. Feb 2014

Blue Process Equipment Inc. JUN 03 2013 Quality Department

Continued Next Page

Weight Shipped	Skid	Crate	Sack	Box	Loose	Loose Pipe	Pipe Bundle	Misc.	Trans Am Representative
Lbs.				1			1		Matthew (Moe) O'Donnell

is a Registered Trademark of Trans Am Piping Products Ltd.

Packing List / MTR Summary

1711 - 66th. Avenue, Edmonton, Alberta T6P 1Y9
Ph# (780) 440-4567 Fax# (780) 440-1488

4" S-160 SEAMLESS STEEL PIPE
A333 GR 6 P.E. (S.R.L.)

PO# P6910-5B1108-20 Item# 5
Heat Number: 11603075
Trans Am Piping Products Ltd. - Rev'd By: SB
Shipment/Seq #: S11 - 1752 2

YANTAI LUBAO STEEL PIPE CO., LTD.

MILL TEST CERTIFICATE

(EN10204 3.1)

NO. 185 XINGFU MIDDLE ROAD, YANTAI , CHINA
TEL: 0086 535-6843946/6854750 FAX: (0535)6842245
HTTP://WWW.LUBAOSTEEL TUBE.COM

PURCHASER	TRANS AM PIPING PRODUCTS LTD.,	DESCRIPTION OF GOODS	PIPE
DIMENSION STANDARD	ASME B36.10	CUSTOMER'S NO.	L00109 / CERTIFICATE NO. BGTYG1107070001400
MATERIAL SPECIFICATION	ASTM A333 GR 6-2005/ASME SA333 GR6-2007 NACE MR0175-2003/ISO 15156	DATE OF DELIVERY	20110707 / SUB_CONTRACT NO. G1C6107962
		P.O.NO..	4500 CT-11-326 / DATE OF ISSUE 20110707
		STAMP OF MILL INSPECTOR	LICENSE NO.

O.D.	114.3mm 4	SCH60 W.T.	13.49mm	Length	5.8-6.7M	Total Length		Total Bundles		Order Quantity	
Total Pieces			Total Weight		12.396	Delivery Condition	As-Rolled	Making Method		Hot Finished Seamless	

No.	Heat No.	*1	*2	Chemical Composition C	Si	Mn	P	S	Cu	Ni	Cr	V	Mo	Ti	B	Nb	Al	CE	Lot No.	*3	*4	*5	Tensile Test G.L.=50mm Y.S.	T.S.	E.L.	EXT.	*3	*4	*5	*6	*7	Impact Test J Akv Absorb Energy 1	2	3	AVG.	Hardness Brinnel (HB)	Pieces	Weight MT
																							Mpa		%													
MIN				0	0.1	0.29	0	0	0	0	0	0	0	0	0	0	0						240	415														
MAX				0.24	0.99	1.35	0.025	0.025	0.99	0.99	0.99	0.99	0.99	0.99	0.99	0.99	0.99						999	999											11		14			
11603075	H	P		0.20	0.27	1.34	0.018	0.011	0.14	0.10	0.07	0.01	0.01	0.001	0	0.002	0	0.46	1206225	1	6	L	400	530	36.5		1	C	A	1		48	48	46	47	165		
																				1	6	L	405	530	37.0		1	C	A	1		49	47	48	48	166		

E.T.	E.M.I.	U.T.	M.P.I.	Visual & Dimensions		Coating	Drift Test	Hydrostatic Pressure
——	GOOD	——	——	GOOD		GOOD	——	19.00MPa
Expansion	Ring Expansion	Ring Tensile	Flattening	Bending	Flanging	SSCC	Macrostructure	Duration of Time
——	——	——	GOOD	——	——	——	——	5s

NOTES: *1Chemical Composition:H=Heat(Ladle)Analysis;*2Sampling Position:P=Pipe Body;*3Orientation:1=Longitudinal;*4Size:6=StripT×25.4mmC=10×10×55mm;*5Temp:A=-49° F or -45℃ L=18℃-25℃;*6Gauge Length:1=CharpyV C.E.=C+Mn/6+(Cr+Mo+V)/5+(Ni+Cu)/15 G.L.=Gauge Length

Remark: Heat Treatment Condition For Pipe Normalized:900℃X15MIN

SURVEYOR: WE HERE CERTIFY THAT THE MATERIAL HEREIN DESCRIBED HAS BEEN MANUFACTURED, SAMPLED, TESTED AND INSPECTED IN ACCORDANCE WITH THE REQUIREMENTS OF ABOVE SPECIFICATIONS AND PURCHASE ORDER, AND MET THE REQUIREMENTS.

CHIEF OF QUALITY CONTROL DEPT.

2" S-160 SEAMLESS STEEL PIPE
A333 GR 6 P.E. (S.R.L.)

PO# P6910-5B1108-20 Item# 6
Heat Number: 600324
Trans Am Piping Products Ltd. - Rev'd By: SB
Shipment/Seq #: S12 - 1457 1

Contract No.: CI-12-187
PO.NO.: CI-12-187
Name of Customer: TRANS AM PIPING PRODUCTS LTD.,
L/C NO.:
Description: Seamless Steel Line Pipe

HENGYANG VALIN STEEL TUBE CO.,LTD

MILL INSPECTION CERTIFICATE

Date: APR 06,2012
Page: 1/1

Add: 10 Dalixincun, Hengyang City, Hunan, China
Tel and Fax: +86 734 8873739 8872942
Cable: 6993
P.C. 421001

SPEC:ASTM/ASME A/SA 333-2011,NACE MR 0175-2009/ISO 15156-2:2009 — CERTIFICATE NO:12-1-04-16

NO.	BATCH NO.	HEAT NO.	STEEL GRADE	SIZE	BUNDLES	PIECES	FEETS	QUANTITY (MT)	ACTUAL WEIGHT(MT)
1	12-A4485	600324	Gr. 6	2" 160 A333 GR 6 P.E. SRL					

NO.	DELIVERY CONDITION(≥650℃)	NONDESTRUCTIVE TEST ET	NONDESTRUCTIVE TEST UT		C	Si	Mn	P	S	Cu	Ni	Cr	Mo	V	Ti	B	NB	CE
					CHEMICAL COMPOSITION % (L:Ladle analysis P:Product analysis)													
1	NORMALIZED	OK		L	0.17	0.33	1.28	0.023	0.002	0.01	0.01	0.03	0.01	0.01	0.001	0	0	0.39
				P	0.17	0.32	1.28	0.022	0.002	0.01	0.01	0.02	0.01	0.02	0.001	0	0	0.39
				P	0.17	0.32	1.28	0.022	0.002	0.01	0.01	0.02	0.01	0.02	0.001	0	0	0.39

NO.	T.S. (MPA)	Y.S. (MPA)	E.L. (%)		Ak (J) IMPACT (-45℃) SIZE	1	2	3	AVG.	HARDNESS BRINNEL (HB)	HYDROSTATIC TEST (MPA)	FLATTEN TEST	BEND TEST
	Strip,L,bo=19mm,Lo=50mm												
1	584	420	35.5	L	10X7.5	26	30	33	30	162	17.0	OK	OK

REMARKS: 1.We hereby certify that this certificate of quality is issued and signed by the manufacture.
2. We hereby certify that the properties described herein meet the requirement of the above spec.
3. We hereby certify that this certificate is issued accordance with EN 10204 3.1B
4. SPECIMEN SIZE: (Pipe end, Longitudinal, Gauge Length=2")
A.For pipes≤1" full length specimen were used;
B.For pipes>1" longitudinal strip specimen were used; the width of the gauge length portion is 3/4"
5.HEAT TREATMENT CONDITION FOR PIPE NORMALIZED:900℃ X 10MIN
6.Impact Test :L=Longitudinal
7.DIMENSION STANDARD:ASME B36.10
8.MANUFACTURE METHOD:COLD DRAWN
9.CE=C+Mn/6+(Cr+Mo+V)/5+(Cu+Ni)/15

QUALITY MANAGER

HENGYANG VALIN STEEL TUBE CO.,LTD. 衡阳华菱钢管有限公司 HUNAN-CHINA

Blue Process Equipment Inc. JUN 03 2013 Quality Department

MTR's 5B1108-80

825822 (16" STD PIPE A106)
323903 (12" STD PIPE A106)
104012 (12" STD PIPE A333)
12K20096 (16" X 12" STD CONC RED A234)
A362 (16" STD ELBOW 90 A234)
58799 (12" X 2" S80 WOL A350)
9745 (12" STD ELBOW 90 A234)
570175 (16" STD FLANGE 150# A105)
12/34863 (12" STD FLANGE 150# A105)
555294 (12" STD FLANGE 150# A350)
12/74582 (2" S80 FLANGE 150# A350)
420958 (4" STD PIPE A106)
509140 (2" XH A106)
623590 (2" XH A106)
511773 (2" S80 PIPE A333)
54P20142 (4" X 2" STD X 80 CONC RED A234)
58960 (4" X 1" TOL 3M A105)
TMU (4" SPEC BLIND 150# A516)
338V (4" STD ELBOW 90 A234)
2L584V (2" X 2" S80 TEE A234)
3A3680 (2" S80 ELBOW 90 A234)
13/36910 (4" STD FLANGE 150# A105)
12/72669 (2" S80 FLANGE 150# A105)
13/74582 (2" S80 FLANGE 150# A350)
2304-02929 (2" S80 PIPE A106)
58960 (2" X 1" TOL 3M A105)
58880 (2" X 3/4" TOL 3M A105)
28105 (2" S80 ELBOW 90 A234)
B422 (2" S80 ELBOW 90 A234)
7630 (2" S80 ELBOW 90 A234)
531T2 (2" S80 FLANGE 300# A105)
313328 (14" STD PIPE A333)\
398305 (16" X 14" STD CONC RED A420)
59066 (2" X 8-36" XH PIPET A105)
58266 (14" X 3/4" TOL 3M A350)
CF541 (14" STD ELBOW 90 A420)
179360 (16" STD FLANGE 150# A350)
749V2 (14" STD FLANGE 150# A350)
20421/4 (14" STD FLANGE 300# A350)
A88V (14" X 12" STD CONC RED A234)
9362 (14" STD ELBOW 90 A234)
179356 (14" STD FLANGE 300# A105)
TQF (2" SPEC BLIND 300# A516)
13E00034 (2" S80 ELBOW 45 A234)
12/73144 (2" S80 FLANGE 150# A350)
UFM (6" SPEC BLIND 150# A516)
0547 (6" STD ELBOW 90 A234)
A26T3 (6" STD FLANGE 150# A105)
W11306184 (10" STD PIPE A333)
W21103747 (4" STD PIPE A106)
576179 (1`` XH PIPE A333)
12C20116 (10" X 8" STD CONC RED A234)
58892 (4" X 8-10" STD PIPET A105)
58912 (4" X 2" S80 WOL A105)
3A756V (4" X 3" STD TEE A234)
12F30103 (4" STD CAP A234)
11/39286 (10" STD FLANGE 150# A350)
800A2 (8" STD FLANGE 150# A105)
12/35152 (4" STD FLANGE 150# A105)
13/76389 (3" STD FLANGE 150# A105)
A43T3 (2" S80 FLANGE 150# A105)
12M01011 (2" S80 ELBOW 90 A420)
58581 (2" X 3/4" TOL 3M A105)
H2197 (2" X 1" 80 X 160 CONC SWAGE A420)
H2231 (2' X 1 1/2" S80 CONC SWAGE A420)
12/39812 (2" S80 FLANGE 300# A350)
77767 (1 1/2" S80 FLANGE 300# A350)
CE321 (4" X 2" STD X 80 RED TEE A234)
58848 (2" X 3/4" TOL 3M A105)
12/34034 (4" STD FLANGE 300# A105)
BV069 (4" X 2" TEE STD X 80 A234)
12/34021 (4" STD FLANGE 300# A105)

5Blue Process Equipment Inc.

Exhibit 23.7 Receiving Inspection Report

RECEIVING INSPECTION REPORT

DATE: JUL - 2 2014 PURCHASE ORDER# SB110B-80

CUSTOMER/OWNER Dwor

DESCRIPTION OF MATERIAL:	PLATE	TUBE/PIPE	BAR	FITTINGS	

		YES	NO
1	MATERIALS CORRECT TO PURCHASE ORDER:	✓	
2	MTR SUPPLIED WITH MATERIALS	✓	
3	MTR CHECKED AGAINST PACKING SLIP	✓	
4	MTR CORRECT FOR THIS MATERIAL	✓	
5	IS MATERIALS IN GOOD CONDITION (NO DAMAGE):	✓	
6	IS MATERIAL THE SAME SIZE AND SCHEDULE AS REQUIRED ON THE PURCHASE ORDER:	✓	
7	IS MATERIAL THE CORRECT GRADE AS REQUIRED ON THE PURCHASE ORDER	✓	
8	IS THE MATERIAL LEGIBLY MARKED FROM THE SUPPLIER? THIS MAY BE STAMPED or STENCILED (record Grade. Type, Heat # And any other relevant information)	✓	

5 Blue Process Equipment Inc. JUL - 2 2014 Quality Department

NOTE: If any of these inspection steps cannot be completed the inspector shall notify the QS ASAP. The QS shall make out a NCR detailing the discrepancies and the material in question shall be quarantined until a satisfactory solution to the problem can be resolved. This may include rework or sending the material back to the supplier

Inspector : G. CAMERON Signature: Date JUL - 2 2014
MTR REVIEW
(780)955-2040 E:211

PO# P7890-5B1106-80 Item# 92
Heat Number: 58880 3/4X11/2-36 CL 3000 FS THREADED PIPET
Trans Am Piping Products Ltd. - Rev'd By: SB A350-LF2 CL 1
Shipment/Seq #: S 12 - 1963 8

INTERNATIONAL WFI NUCLEAR PRODUCTS
Manufacturer of Piping and Pressure Vessel Components
4404 Haygood St - Houston, TX 77022
Phone: 713-695-3633 Fax: 713-695-3528
A Bonney Forge Company

Sold To: TRANS AM PIPING PRODUCTS LTD
9335 ENDEAVOR DRIVE S.E.
CALGARY AB T3S 0A1

MTR #: 242,052

PO #: CI-12-609

Sales Order #: C001216269 Date: 11/13/2012

This product has not come in direct contact with mercury or any of its compounds, nor with any mercury-containing device employing a single boundary of containment. No welding performed.
We certify that the contents of this report are correct and accurate, and that all test results and operations performed by WFI or its subcontractors are in compliance with the material specification and requirements of the referenced code or standard, and that the material conforms to the dimensional requirements of the order. This document is in accordance with EN10204 3.1.

Certified Material Test Report

Heat Code: 58880

Material: A/SA350 00a LF2 CL1

Item	Quantity	Description
22	250	36 - 1 1/2 X 3/4 3M THP A350LF2 CL1

Chemical Composition

Ladle	C	CR	CU	MN	MO	NB	NI	P
	0.209	0.04	0.050	1.02	0.006	0.013	0.02	0.008
	S	SI	V					
	0.019	0.24	0.004					

Carbon Equivalency: Ladle 0.39

	Tensile PSI	Yield PSI	Elong %	RA %	Hardness	
Product	74,099	49,441	34.85	56.26	135 BHN	135 BHN

Charpy V-Notch Properties: Test Temperature: -50 F

FT LBS: 12/24/20 % Shear: NB/NB/NB MLE: NB/NB/NB

Normalized

IAW NACE MR0175/ ISO 15156-2009

Marie Dehmer
Quality Assurance Representative

1108-80

PO# P6675.5B1087.80 Item# 64
Heat Number: 420958
Trans Am Piping Products Ltd. - Rev'd By: SB
Shipment/Seq #: S 13 - 1077 1

4" STD SEAMLESS STEEL PIPE
A106 GR B B.E. (S.R.L.)

TPCO

ADD:JINTANG ROAD DONGLI
DISTRICT,TIANJIN,CHINA
TEL:86-22-24801139
FAX:86-22-24801291

TIANJIN PIPE(GROUP)CORPORATION
QUALITY CERTIFICATE
(EN10204 3.1)

Licence No.:

No.: C12927371264

1	Contract No.	2012SSG-EI-12-517	L/C No.		O.D.×W.T.	4"STD(114.3x 6.02mm)	Packing	IN LOOSE
	Order	Trans Am Piping Products Ltd.,	Product	Seamless Steel Line Pipe	Steel grade	Cat Ⅰ Gr.290SS/X42/Gr.B	Total pieces	
	P.O.No.	EI-12-517	Port of destl.		Man. Method	HOT ROLLING SEAMLESS	Total metres	
	Standard	CSA Z245.1-07/API 5L PSL1-2007/ASTM/ASME A/SA 106-2011			Length range	SRL	Total weight	

	Heat No.	Lot No.	Quantity: Pieces	Meters	Bundles	Tons	Delivery condition	Sample No.	Tensile test(Mpa): 1"	Tem. ℃	T.S.	Type	Y.S.	Elong. %	Shrink %	Impact test(J): 2"	Tem. ℃	Size	AK1	shear %	AK2	shear %	AK3	shear %	AVE	shear %
2	420958	130					Hot rolling	130-12-2184	A	23	550	Rt0.5	407	31.5												
	Total							Note:	A:strip,L,bo=26.4mm,Lo=50mm																	

	Heat No.	Lot No.	Sample No.	Hardness Brinnel	Hardness Brinnel(HB)(inside): 1	2	3	4	AVE	Hardness Brinnel(HB)(middle): 1	2	3	4	AVE	Hardness Brinnel(HB)(outside): 1	2	3	4	AVE	NDE	Fla. test(1)	Fla. test(2)
3	420958	130	130-12-2184		155	154	156	155	155	155	156	156	154	155	155	154	155	154	155	EMI/L4	G	G

	Heat No.		Chemical composition%(L:Ladle analysis P:Product analysis): C	Si	Mn	P	S	Ni	Cr	Mo	Cu	Al	V	Nb	Ti	B	Ca	N	H	O	CE(CSA)	CE(IIW)	Hydro.Test (Mpa/s)
4	Steel speci.																						
	420958	L	0.17	0.34	1.14	0.016	0.007	0.03	0.05	0.01	0.04	0.020	0.06	0.001	0.001	0.0004	0.0002				0.39	0.39	15.5/8
	Q345B	P	0.17	0.33	1.14	0.017	0.007	0.03	0.04	0.01	0.04	0.020	0.05	0.001	0.001	0.0004	0.0003				0.39	0.38	
		P	0.17	0.33	1.14	0.017	0.007	0.03	0.04	0.01	0.04	0.020	0.05	0.001	0.001	0.0004	0.0003				0.39	0.38	
		L																					
		P																					
		P																					
		L																					
		P																					
		P																					

5	NDE(100%)	Visual and dimension	Hydro.Test	Pipe end NDE	Pipe end bevelling	Residual mag. Test	SSCC	HIC
	G	G	G	G	G	G		

We hereby state that all pipes are manufactured and inspected according to above standards and orders.

Seal from certification

Note:	1.NACE MR 0175-2009/ISO 15156-2:2009; 2.CE(CSA)=C+Fx{Mn/6+Si/24+Cu/15+Ni/20+(Cr+Mo+V+Nb)/5+5B} CE II W=C+Mn/6+(Cr+Mo+V)/5+(Cu+Ni)/15; 3.The pipe is produced from "fully killed" steel; 4.Silicon and calcium treated for inclusion morphology control in Steel Melting; Billet produced by TPCO	No. C12927371264	Date
		Page (1)	2012-12-31

Remark:desti.=destination;tem.=temperature;speci.=specification;Man.=Manufacture;Fla.=Flattening;G=Good;Hydro.=Hydrostatic;Mag.=Magnetic

PO# P7113-5B1093-80 Item# 53
Heat Number: 509140
Trans Am Piping Products Ltd. - Rev'd By: SB
Shipment/Seq #: S 12 - 1323 1

2" XH BLK SEAMLESS STEEL PIPE
A106 GR B B.E. (S.R.L.)

Contract No.: CI-11-708
PO.NO.: CI-11-708
Name of Customer: TRANS AM PIPING PRODUCTS LTD.,
L/C NO.:
Description: PIPE
TOTAL: 308PCS,9BUNDLES,15.622MT

HENGYANG VALIN STEEL TUBE CO.,LTD

MILL INSPECTION CERTIFICATE

Date: MAR 09,2012
Page: 1/1

Add: 10 Dalixincun, Hengyang City, Hunan, China
Tel and Fax: +86 734 8873739 8872942
Cable: 6993
P.C. 421001

SPEC:ASTM A106-B-2008 ,ASME SA106-B-2008 ,API 5L X42 PSL1 -2007,CSA Z245.1-2007 Gr.290 Cat I,NACE MR0175-2009/ISO 15156

CERTIFICATE NO:12-1-03-40

NO.	BATCH NO.	HEAT NO.	STEEL GRADE	SIZE	BUNDLES	PIECES	FEETS	QUANTITY (MT)	ACTUAL WEIGHT(MT)
1	12-A2620	509140	B	2" XS A106 GR B B.E. SRL	9	308	6566.56	15.622	

NO.	DELIVERY CONDITION(≥650℃)	NONDESTRUCTIVE TEST ET	NONDESTRUCTIVE TEST UT		C	Si	Mn	P	S	Cu	Ni	Cr	Mo	V	Ti	B	NB	CE	CE(CSA)
1	NORMALIZED	OK		L	0.13	0.29	1.07	0.009	0.005	0.07	0.03	0.04	0.02	0.03	0.001	0.0005	0.010	0.33	0.31
				P	0.14	0.29	1.06	0.009	0.004	0.06	0.03	0.04	0.02	0.04	0.001	0.0005	0.010	0.34	0.33
				P	0.14	0.29	1.06	0.009	0.004	0.06	0.03	0.04	0.02	0.04	0.001	0.0005	0.010	0.34	0.33

CHEMICAL COMPOSITION % (L:Ladle analysis P:Product analysis)

NO.	T.S. (MPA)	Y.S. (MPA)	E.L. (%)	Ak (J) IMPACT SIZE	AK	Ori/Te	HARDNESS BRINNEL (HB)	HYDROSTATIC TEST (MPA)	FLATTEN TEST	BEND TEST
	Strip,L,bo=19mm,Lo=50mm									
1	450	310	34				162	17.0	OK	OK

REMARKS: 1.We hereby certify that this certificate of quality is issued and signed by the manufacture.
2. We hereby certify that the properties described herein meet the requirement of the above spec.
3. We hereby certify that this certificate is issued accordance with EN 10204 3.1B
4. SPECIMEN SIZE: (Pipe end, Longitudinal, Gauge Length=2")
A.For pipes≤1" full length specimen were used;
B.For pipes>1" longitudinal strip specimen were used; the width of the gauge length portion is 3/4"
5.NORMALIZED:900°C
6.DIMENSION STANDARD:ASME B36.10
7.MANUFACTURE METHOD:COLD DRAWN
8.CE=C+Mn/5+(Cr+Mo+V)/5+(Cu+Ni)/15 CE(CSA)=C+Fx{Mn/6+Si/24+Cu/15+Ni/20+(Cr+Mo+V+Nb)/5+5B}

QUALITY MANAGER

HENGYANG VALIN STEEL TUBE CO., LTD. 衡陽華菱鋼管有限公司 HUNAN CHINA

SIDE QC DEPT
CHEM SELECT
VERIFIED BY:

PO# P6624-5B1088-80 Item# 54
Heat Number: 623590
Trans Am Piping Products Ltd. - Rev'd By: SB
Shipment/Seq #: S 13 - 1077 - 2

2" XH BLK SEAMLESS STEEL PIPE
A106 GR B B.E. (S.R.L.)

TPCO

ADD:JINTANG ROAD DONGLI
DISTRICT,TIANJIN,CHINA
TEL:86-22-24801139
FAX:86-22-24801291

TIANJIN PIPE(GROUP)CORPORATION
QUALITY CERTIFICATE
(EN10204 3.1)

Licence No.:

No.: C12926252650

1	Contract No.	2012SSG-EI-12-517	L/C No.		O.D.×W.T.	2"XS(60.3x 5.54mm)	Packing	IN LOOSE
	Order	Trans Am Piping Products Ltd.,	Product	Seamless Steel Line Pipe	Steel grade	Cat Ⅰ Gr.290SS/X42/Gr.B	Total pieces	
	P.O.No.	EI-12-517	Port of desti.		Man. Method	HOT ROLLING SEAMLESS	Total metres	
	Standard	CSA Z245.1-07/API 5L PSL1-2007/ASTM/ASME A/SA 106-2011			Length range	SRL	Total weight	

	Heat No.	Lot No.	Quantity: Pieces	Meters	Bundles	Tons	Delivery condition	Sample No.	Tensile test(Mpa): 1*	Tem. ℃	T.S.	Type	Y.S.	Elong. %	Shrink %	Impact test(J): 2*	Tem. ℃	Size	AK1	shear %	AK2	shear %	AK3	shear %	AVE	shear %
2	623590	130					Hot rolling	130-12-1977	A	23	575	Rt0.5	425	32.0												
	Total							Note:	A:strip,L,bo=19mm,Lo=50mm																	

	Heat No.	Lot No.	Sample No.	Hardness Brinnel	Hardness Brinnel(HB)(inside): 1	2	3	4	AVE	Hardness Brinnel(HB)(middle): 1	2	3	4	AVE	Hardness Brinnel(HB)(outside): 1	2	3	4	AVE	NDE	Fla. test(1)	Fla. test(2)
3	623590	130	130-12-1977		153	154	153	154	154	154	153	153	155	154	153	155	154	154	154	EMI/L4	G	G

	Heat No.		Chemical composition%(L:Ladle analysis P:Product analysis): C	Si	Mn	P	S	Ni	Cr	Mo	Cu	Al	V	Nb	Ti	B	Ca	N	H	O	CE(CSA)	CE(IIW)	Hydro.Test (Mpa/s)
4	Steel speci.																						
	623590	L	0.17	0.34	1.14	0.017	0.006	0.03	0.05	0.03	0.04	0.020	0.04	0.001	0.001	0.0003	0.0002				0.39	0.39	17.0/8
	Q345B	P	0.17	0.34	1.15	0.016	0.006	0.03	0.05	0.02	0.03	0.020	0.04	0.001	0.001	0.0003	0.0002				0.39	0.39	
		P	0.17	0.34	1.15	0.016	0.006	0.03	0.05	0.02	0.03	0.020	0.04	0.001	0.001	0.0003	0.0002				0.39	0.39	
		L																					
		P																					
		P																					
		L																					
		P																					
		P																					

5	NDE(100%)	Visual and dimension	Hydro.Test	Pipe end NDE	Pipe end bevelling	Residual mag. Test	SSCC	HIC
	G	G	G	G	G	G		

We hereby state that all pipes are manufactured and inspected according to above standards and order.

Seal from Certification

Note: 1.NACE MR 0175-2009/ISO 15156-2:2009; 2.CE(CSA)=C+Fx{Mn/6+Si/24+Cu/15+Ni/20+(Cr+Mo+V+Nb)/5+5B}
CE II W=C+Mn/6+(Cr+Mo+V)/5+(Cu+Ni)/15; 3.The pipe is produced from "fully killed" steel; 4.Silicon and calcium treated for inclusion morphology control in Steel Melting; Billet produced by TPCO

No.	C12926252650	Date	
Page	(1)	2012-12-28	

Remark:desti.=destination;tem.=temperature;speci.=specification;Man.=Manufacture;Fla.=Flattening;G=Good;Hydro.=Hydrostatic;Mag.=Magnetic

PO# P6829-5B1100-80 Item# 30
Heat Number: 54P20142
Trans Am Piping Products Ltd. - Rev'd By: SB
Shipment/Seq #: S12 - 1294 133

4 X 2 STD/XH BW CONC REDUCER
A234-WPB

Purchaser : TRANS-AM PIPING PRODUCTS LTD.

INSPECTION CERTIFICATE

TO EN10204 3.1

Thai Benkan Co., Ltd.
58 Soi Watkrunai, Bangkru, Prapadaeng,
Samutprakarn, 10130 Thailand.

E-No.	Purchase Order No.	Job No.	D M Y Certificate No.
MC-668	CI-11-701		11/04/2012 T-2012180129

No.		MFG. No.	Specification for Material Made from Seamless Pipe ASTM A234-11/ASME SA234-10 Gr.WPB CSA Z245.1-07 / CAE / CCE / EN / ISO 15590-2:2003 Product & Size (T*)	Quantity	Heat Treatment (Note 3)	Specification for Inspection ASME B16.9-2007,B16.25-2007 Hardness Actual Data	Visual Examination Good	Dimensional Inspection Good
1		54P20142	RC WPB 4 X 2 STD/XS	100	N	HB : 125 - 140		
2		54P20143	RC WPB 4 X 2 STD/XS	10	N	HB : 135 - 150		
3		11P20057	RE WPB 4 X 2 S80	50	N	HB : 130 - 145		
4		11N20070	RE WPB 8 X 4 S80	10	N	HB : 120 - 140		
5		12B20075	RE WPB 10 X 8 XS	9/10	N	HB : 120 - 140		

Specification		Chemical Composition %												Tension Test *2			
		C	Si	Mn	P	S	Cr	Ni	Cu	Mo	V	Nb	C.E.	YS	TS	E	
Min.		x 100	x 100	x 100	x 1000	x 1000	x 100	x 100	x 100	x 100	x 1000	x 1000	x 100	MPa.			HARDNESS MAX
Max.				1.0	29									240	415	30	197 HB : GOOD
Material Heat No.		30		106	50	58	40	40	40	15	60	20		655			
1	47400	16	22	87	13	2	3	2	9	3	3	1	34	293	429	34	ORIGINAL
2	971186	15	19	75	14	4	7	11	19	6	9	0	35	317	468	43	
3	J1KA032	19	18	83	18	5	1	2	5	2	0	0	34	303	477	41	
4	J1KB083	20	19	77	24	8	2	2	6	2	0	0	34	310	470	45	
5	17714	19	17	78	14	2	2	2	4	1	0	0	33	300	461	42	

(Note.1) A : Hot-formed with final temperature between 620°C-980°C, Air Cooling N : Normalizing 910°Cx0.5 HR. Air Cooling *N : Normalizing 910°Cx0.5 HR. Air Cooling (Specification for material made from plate) S : Stress Relieving 675° Cx0.5 HR. Air Cooling

The fittings was manufactured, sampled, tested, and inspected in accordance with the specification, and was found to meet the requirements.

C.E. = C+Mn/6+(Cr+Mo+V)/5+(Ni+Cu)/15 MAGNETIC PARTICLE EXAMINATION FOR TEE ONLY :

We hereby certify that the product described herein has been manufactured in accordance with the specifications concerned and also with the purchaser's requirements and that the test results shown herein are correct.

Quality Assurance Manager
Thai Benkan Co., Ltd.

* 1 : "T" symbolized wall thickness in mm. * 2 : YS Yield strength TS = Tensile strength E = Elongation

Form TZ-6A/3

BLUE QC DEPT
CHEM SELECT
VERIFIED BY:

COPY COPY COPY

INTERNATIONAL
NUCLEAR PRODUCTS
Manufacturer of Piping and Pressure Vessel Components
4404 Haygood St - Houston, TX 77022
Phone: 713-695-3633 Fax: 713-695-3328
A Bonney Forge Company

Sold To: TRANS AM PIPING PRODUCTS
LTD
9335 ENDEAVOR DRIVE S.E.
CALGARY AB T3S 0A1

MTR #: 244,309

PO #: CI-12-628

Sales Order #: C001216832 Date: 12/20/2012

This product has not come in direct contact with mercury or any of its compounds, nor with any mercury-containing device employing a single boundary of containment. No welding performed.

We certify that the contents of this report are correct and accurate, and that all test results and operations performed by WFI or its subcontractors are in compliance with the material specification and requirements of the referenced code or standard, and that the material conforms to the dimensional requirements of the order. This document is in accordance with EN10204 3.1.

Certified Material Test Report

Heat Code: 58960

Material: A/SA105N 09

Item	Quantity	Description
10	171	36 - 3 X 1 3M THP SHIP AND BACKORDER

A/SA105N

Chemical Composition

Ladle	C	CR	CU	MN	MO	NB	NI	P
	0.200	0.06	0.060	1.03	0.004	0.013	0.02	0.008
	S	SI	V					
	0.020	0.22	0.003					

Carbon Equivalency: Ladle 0.39

	Tensile PSI	Yield PSI	Elong %	RA %	Hardness	
Product	75,703	50,796	33.35	63.04	130 BHN	132 BHN

Normalized

IAW NACE MR0175/ ISO 15156- 2009

Marie Dehmer
Quality Assurance Representative

ISO 9001 :2008 Manufacturing Company
Certified by BV. Certificate No. A-THI0000101

Material manufacturer QMS acc.
PED 97/23/EC. Annex1. Par4.3/AD2000W0
Certified by Lloyd's Register
Certificate No. 50207/1A1

INSPECTION CERTIFICATE

EN 10204 3.1 : 2004

AWAJI MATERIA (THAILAND) CO.,LTD.

81,MOO4, PRAKASA ROAD, TAMBOL BANGMUANG, AMPHUR MUANG
SAMUTPRAKARN THAILAND 10270, Tel : (662)701-5226

Date : AUGUST 17, 2012

Purchaser : THE BROADHEAD GROUP/MCJUNKIN CANADA

MADE FROM SEAMLESS STEEL PIPE

Certificate No. : T12-80551

Order No.	Job No.	Product	Raw Material Pipe Maker
S-759158148 WPB/5	-	CARBON STEEL BUTT WELDING FITTINGS	SUMITOMO METAL INDUSTRIES, LTD. (JAPAN)
Inspection Standard	Material Standard		Pipe Heat No. : J2L4136
ASME B16.9-07, ASME B16.25-07 ASTM A960-10 NACE MR-0175/ISO 15156-09 MR-0103-10	ASTM A234-11a, WPB ASME SA234-10, WPB except nuclear usage CSA Z245.11-09, GR.241 CAT.I	Visual: GOOD / Dimension: GOOD	*4 UT Inspection: W.T. INSPECTED / Magnetic Particle Test: -

Manufacturing No. (Heat code.)	Product Code	Material	Article & Size	Quantity	Note.
28105	-	WPB	XS 90 LONG RADIUS ELBOW 2"	800 Pcs.	

		*1 Chemical Composition (%)																	*2 Mechanical Test			Hardness
Specification		C	Si	*3 Mn	P	S	Cu	Ni	Cr	Mo	V	Nb	Ti	B	Ca	N	Al	C.E.	Y.S.	T.S.	E	
Min.		X100	X100	X100	X1000	X1000	X100	X100	X100	X100	X100	X100	X100	X10000	X10000	x1000	X1000	X100	MPa		%	HB
Max.		-	10	29	-	-	-	-	-	-	-	-	-	-	-	-	-	-	240	415	25.5	-
Heat No.		30	-	106	50	58	40	40	40	15	8	2	-	-	-	-	-	50	-	-	-	197
J2L4136	L	18	22	68	18	9	2	2	7	2	0	0	0	0	10	12	5	31	317	483	57	137
	P	-	-	-	-	-	-	-	-	-	-	-	-	-	-	-	-	-				

$$C.E. = C + \frac{Mn}{6} + \frac{Cr+Mo+V}{5} + \frac{Ni+Cu}{15}$$

*1 Equivalent for A234 WPB
*2 Y.S.= Yield Strength (0.2% offset), T.S. = Tensile Strength, E = Elongation (in 50mm)
*3 As per foot note D of ASTM A234 Table 1.
*4 UT = Ultrasonic thickness inspection

L = Ladle Analysis, P = Product Analysis
Weld repair is not applied to our products.
Steel Making by Vacuum degassed, killed steel.

ELBOW / Forming temperature 850℃—945℃ and cooled in still air
TEE, REDUCER & CAP / Normalizing : 910℃

AT-24(2)17

"We hereby certify that the material described herein has been duly inspected and conforms to the standard as specified above.

Surveyor to

QA. GM. /Work Inspector S. MAEKAWA

2" XH LR 90 BW ELLS A234-WPB

PO# P6512-5B1089.00 Item# 1
Heat Number: B422
Trans Am Piping Products Ltd. - Rev'd By: SB
Shipment/Seq #: S13-1160.162

INSPECTION CERTIFICATE

Customer : TRANS AM PIPING PRODUCTS LTD.
Product : SEAMLESS CARBON STEEL BUTT WELD FITTINGS
Spec : ASME SA/ASTM A234 WPB-11a CSA A245.11-96 CAT I, NACE MR 0175-03& ISO 15156-2009

(MILL TEST)
CHUP HSIN ENTERPRISE CO., LTD.
17, TUNG LI ROAD HSIAO KANG,
KAOHSIUNG, TAIWAN, R.O.C.
TEL:(07)831-9157 FAX:(07)821-7500, 831-2942

Certificate No : 00100169-0107
Order No : CI-12-649
Date : 2013/03/07
Page : 1/1

Starting Material	Specification for Inspection	Visual Inspection	Dimensional Inspection
ASTM A106 GR.B	ASME B16.9-2007	GOOD	GOOD

Item	Description		Quantity	Heat ID	Heat No	Raw Certificate No.	NDE	Impact Test					
								Test Temp	Size of specimen	Charpy V-Notch Impact Value			Ave.
94	90 E L/R SMLS XS	2	413	B422	J0L0422	SUMITOMO BYYM9209							
95	90 E L/R SMLS XS	3	800	B422	J0L3422	SUMITOMO BYYM8850							
96	90 E L/R SMLS XS	3 1/2	15	B128	J0L1312	SUMITOMO BYYM8902							
98	90 E L/R SMLS XS	6	93	639V	J0L639V	SUMITOMO BYYM9204							
98	90 E L/R SMLS XS	6	7	B520	J0L2520	SUMITOMO BYYM8847							

Specification	Chemical Composition%												Tension Test			Hardness Test	Heat Treatment	REMARK
	C	Si	Mn	P	S	Cu	Ni	Cr	Mo	V	Nb	C.E	Y.S	T.S	E			
	X100	X100	X100	X1000	X1000	X100	X100	X100	X100	X1000	X1000	X100	P.S.I	P.S.I	%	HB		
Min.		10	29										35000	60000	30			
Max.	30		135	50	58	40	40	40	15	80	20	50				197		
94	18	23	54	7	3	2	2	4	2	0	0	28	42200	71100	40.0	138	620℃ TO 980℃ HOT FORMED	[DIN 50049/3.1B] EN10204 3.1
95	18	23	54	7	3	2	2	4	2	0	0	28	44000	68900	40.0	138		
96	18	26	55	12	10	5	2	3	1	0	0	27	45500	67600	40.0	138		
98	16	23	85	11	6	7	2	4	8	0	0	32	45300	68800	41.0	136		
98	19	26	58	8	18	12	4	2	1	0	0	29	42100	69600	41.0	139		

C.E. = C+Mn / 6 + (Cr+Mo+V)/5 + (Ni+Cu)/15

We hereby certify that the material herein described has been manufactured, sampled, tested and inspected in accordance with, and was found to meet, the requirements of above specifications and purchaser's order.

Quality Department

L.S.Tsai
Chief of Quality Assurance Section

2" XH LR 90 BW ELLS A234-WPB

PO# P6832-5B1101-80 Item# 14
Heat Number: 7630
Trans Am Piping Products Ltd. - Rev'd By: SB
Shipment / Seq #: S 12 - 1395 30

INSPECTION CERTIFICATE

Customer : TRANS AM PIPING PRODUCTS LTD.
Product : SEAMLESS CARBON STEEL BUTT WELD FITTINGS
Spec : ASME SA/ASTM A234 WPB-05a CSA A245.11-96 CAT.1, NACE MR 0175-03& ISO 15156-2009

(MILL TEST)
CHUP HSIN ENTERPRISE CO., LTD.
17, TUNG LI ROAD HSIAO KANG,
KAOHSIUNG, TAIWAN, R.O.C.
TEL:(07)831-9157 FAX:(07)821-7500, 831-2942

Certificate No : O0100045-0103
Order No : CI-12-233
Date : 2012/04/30
Page : 1 / 1

Starting Material	Specification for Inspection	Visual Inspection	Dimensional Inspection
ASTM A106 GR.B	ASME B16.9-2003	GOOD	GOOD

Item	Description	Quantity	Heat ID	Heat No	Raw Certificate No.	NDE	Impact Test				
							Test Temp.	Size of specimen	Charpy V.-Notch Impact Value J		Ave.
131	90 E L/R SMLS XS	2	2000	7630	317630	BAOSHAN 1112050005600					0
133	90 E L/R SMLS XS	3	500	6044	316044	BAOSHAN 1108050015200					0
135	90 E L/R SMLS XS	6	252	B243	516243	TIANJIN 12020805					0
137	90 E L/R SMLS XS	10	25	421V	1134421V	HENGYANG 2011-01-0624-5.					0
139	90 E L/R SMLS XS	14	3	3411	1133411	HENGYANG 2011-01-0624-3					0

Specification	Chemical Composition%												Tension Test			Hardness Test	Heat Treatment	REMARK
	C	Si	Mn	P	S	Cu	Ni	Cr	Mo	V	Nb	C.E	Y.S	T.S	E			
	X100	X100	X100	X1000	X1000	X100	X100	X100	X100	X1000	X1000	X100	P.S.I	P.S.I	%	HB		
Min.		10	29										35000	60000	30			
Max.	30		106	50	58	40	40	40	15	80	20	50		95000		197		
131	19	24	58	6	2	5	3	5	3	<1	<1	29	45561	72400	31	135	620℃ TO 980℃ HOT FORMED	[DIN 50049/3.1B] EN10204 3.1
133	18	25	55	8	3	4	3	4	2	<1	<1	28	42224	67600	36	138		
135	13	24	97	8	2	7	3	4	1	4	0	30	46432	68900	38	136		
137	15	25	92	10	5	8	3	4	1	2	1	31	39903	64600	45	138		
139	15	21	85	10	9	9	2	3	1	2.5	1	30	40628	64600	52	136		

C.E. = C+Mn / 6 + (Cr+Mo+V)/5 + (Ni+Cu)/15

We hereby certify that the material herein described has been manufactured, sampled, tested and inspected in accordance with, and was found to meet, the requirements of above specifications and purchaser's order.

L. S. Tsai
Chief of Quality Assurance Section

5BLUE QC DEPT
CHEM SELECT
VERIFIED BY:

PO# P7403-5B1104-00 Item# 1
Heat Number: 58266
Trans Am Piping Products Ltd. • Rev'd By: VI 3/4X11/2-36 CL 3000 FS S/W PIPET
Shipment/Seq #: S 11 - 1166 4 A350-LF2 CL 1

INTERNATIONAL WPI NUCLEAR PRODUCTS
Manufacturer of Piping and Pressure Vessel Components
4407 Haygood St - Houston, TX 77022
Phone: 713-695-3633 Fax: 713-695-3528
A Bonney Forge Company

Sold To: TRANS AM PIPING PRODUCTS
LTD
9335 ENDEAVOR DRIVE S.E.
CALGARY AB T3S 0A1

MTR #: 203,196

PO #: CI-11-140

Sales Order #: C001100944 Date: 02/23/2011

This product has not come in direct contact with mercury or any of its compounds, nor with any mercury-containing device employing a single boundary of containment. No welding performed.
We certify that the contents of this report are correct and accurate, and that all test results and operations performed by WPI or its subcontractors are in compliance with the material specification and requirements of the referenced code or standard, and that the material conforms to the dimensional requirements of the order. This document is in accordance with BN10204 3.1.

Certified Material Test Report

Heat Code: 58266

Material: A/SA350 00a LF2 CL1

Item	Quantity	Description
98	357	36 - 1 1/2 X 3/4 3M SWP A3501.F2 CL1

Chemical Composition

Ladle	C	CR	CU	MN	MO	NB	NI	P
	0.200	0.03	0.180	1.01	0.010	0.014	0.04	0.007
	S	SI	V					
	0.017	0.20	0.004					

Carbon Equivalency: Ladle 0.39

	Tensile PSI	Yield PSI	Elong %	RA %	Hardness	
Product	74,500	51,000	30.00	68.00	143 BHN	143 BHN

Charpy V-Notch Properties: Test Temperature: -50 F

FT LBS: 80/74/74 % Shear: NB/NB/NB MLB: NB/NB/NB

Normalized

1. IN ACCORDANCE WITH NACE SPEC MR0175-2002
IAW NACE MR0175/ISO 15156-2009

Marie Dehmer
Quality Assurance Representative

6" STD LR 90 BW ELBOW
A234-WPB

PO# P7788-5B1107-80 Item# 8
Heat Number: 0547
TransAm Piping Product9 Ltd. - Rev'd By: SB
Shipment/Seq #: S12 - 1916 33

INSPECTION CERTIFICATE

Customer : TRANS AM PIPING PRODUCTS LTD.
Product : SEAMLESS CARBON STEEL BUTT WELD FITTITNGS
Spec : ASME SA/ASTM A234 WPB-11a CSA A245.11-96 CAT.1, NACE MR 0175-03& ISO 15156-2009

(MILL TEST)
CHUP HSIN ENTERPRISE CO., LTD.
17, TUNG LI ROAD HSIAO KANG,
KAOHSIUNG, TAIWAN, R.O.C.
TEL:(07)831-9157 FAX:(07)821-7500, 831-2942

Certificate No : 00100136-0101
Order No : CI-12-501
Date : 2012/11/05

Starting Material	Specification for Inspection	Visual Inspection	Dimensional Inspection
ASTM A106 GR.B	ASME B16.9-2007	GOOD	GOOD

Item	Description	Quantity	Heat ID	Heat No	Raw Certificate No.	NDE	Impact Test				
							Test Temp	Size of specimen	Charpy V.-Notch Impact Value		Ave.
7	90 E L/R SMLS STD	6	350	0547	J0L0547	SUMITOMO BYYM8270					
8	90 E L/R SMLS STD	8	190	0553	J0L0553	SUMITOMO BYYM8300					
9	90 E L/R SMLS STD	10	180	9731	J0L9731	SUMITOMO WYYL7791					
11	90 E L/R SMLS STD	16	20	5124	215124	TIANJIN 11083012					
12	90 E L/R SMLS STD	18	20	343V	1232343V	HENGYANG C201220067-1					

Specification	Chemical Composition%												Tension Test			Hardness Test	Heat Treatment	REMARK
	C	Si	Mn	P	S	Cu	Ni	Cr	Mo	V	Nb	C.E	Y.S	T.S	E			
	X100	X100	X100	X1000	X1000	X100	X100	X100	X100	X1000	X1000	X100	P.S.I	P.S.I	%	HB		
Min.		10	29										35000	60000	30			
Max.	30		106	50	58	40	40	40	15	80	20	50				197		
7	14	28	99	13	4	6	18	11	2	0	0	33	55100	73300	41	137	620°C TO 980°C	
8	13	27	98	12	5	8	16	9	2	0	0	32	50800	72600	40	134	HOT FORMED	
9	13	30	97	14	6	2	1	2	1	0	0	29	46400	67500	41	136		
11	18	24	96	18	5	10	3	4	2	10	10	37	42079	69600	37	136		
12	14	23	89	12	5	9	3	4	1	3.7	1	29	41063	65200	53	137		

C.E. = C+Mn / 6 + (Cr+Mo+V)/5 + (Ni+Cu)/15

We hereby certify that the material herein described has been manufactured, sampled, tested and inspected in accordance with, and was found to meet, the requirements of above specifications and purchaser's order.

L. S. Tsai
Chief of Quality Assurance Section

PO# P7988-5B1107-80 Item# 3
Heat Number: A26T3
Trans Am Piping Products Ltd. - Rev'd By: SB
Shipment/Seq #: S13 - 1571 - 4

6" CL 150 W/N FLANGE RF STD BORE A105N

CLIENTE / Customer / Client

FORGINGS FLANGES&FITTINGS LLC.
9900 RAILWOOD DRIVE,
SUITE B
HOUSTON, TX 77078
USA

CERTIFICADO DE INSPECCION

Inspection Certificate - Certificat de Réception

DIN EN 10204 / 3.1
ISO 10474 / 3.1

FECHA: Date: 25/02/2013

N.º No. 152233

HOJA: Page: 1

SGI 1922154 SGI 9900208 SGI 9900207

ULMA FORJA, S.COOP.

B.º Zubillaga, 3 - Apdo. 14
20560 OÑATI (Guipuzkoa) SPAIN
Tel.: 34 - 943 780552
Fax: 34 - 943 781808
E-mail: ulma@ulmapiping.com

PRODUCTO / Article - Produit: FLANGES

SU PEDIDO N.º / Your Order No. / Votre Cde. N.º: 174147-HOUSTON

526937

DE / cf. - de: 05/02/2013

Certified acc. PED 97/23/EC+AD2000-W0 by TÜV Rheinland N.º 01 202 EQ 02 7443

Packing List: 101134

NORMAS APLICABLES / Requirements - Normes Applicables: ASME B16.5-09

MARCA DEL FABRICANTE / Mark of factory / Marque du fabricant

MATERIAL CORRESPONDIENTE / Material Correspondent - Qualité: ASTM/ASME A/SA105N-12

MODO DE FUSION (*) / Steel Making - Elaboration de l'acier: NACE MR0175/ISO15156-2-09 & MR0103-12

E = Elec. Y = Origano básico

DEPARTAMENTO / Section / Département: QUALITY ASSURANCE

PARTIDA / Item / Poste	CANTIDAD / Quantity / Quantité	DESCRIPCION / Description / Description	OBSERVACIONES / Remarks / Observations (*)	COLADA N.º / Heat No / N.º Coulée	RESISTENCIA / T.Strength / Resist Rupt N/mm2	LIMITE ELAST. / Y.Strength / 0.2 % N/mm2	ALARGAM. / Elongation / Allongement Lo: 4 d %	ESTRICCION / Red. Area / Striction %	RESILIENCIA / Impact test / Résilience Joules	CHARPY V 10x10mm MEDIA / Average / Moyenne	°C	DUREZA / Hardness / Dureté HBW
3 F14WA039	1.000	WN 3 150LB STD/40 RF A105N	NE	A19T3	508	321	30,70	59,30				150 154
7 F14WA060	458	WN 6 150LB STD/40 RF A105N	NE	A26T3	514	316	29,60	59,40				150 154
7 F14WA060	270	WN 6 150LB STD/40 RF A105N	NE	A27T3	511	319	30,20	58,70				147 151
23 F34WA120	39	WN 12 300LB STD RF A105N	NE	A23T3	506	318	29,70	59,40				152 156
25 F58WA020	180	WN 2 600LB XS/80 RF A105N	NE	A05T3	516	304	28,30	59,00				146 150
29 F68WA040	46	WN 4 600LB XS/80 RF A105N	NE	A28T3	509	315	29,80	59,20				149 153

COLADA N.º / Heat No / N.º Coulée	COMPOSICION QUIMICA - STEEL MAKER'S LADLE ANALYSIS - ANALYSE CHIMIQUE															
	C %	Si %	Mn %	P %	S %	Cr %	Ni %	Mo %	Nb %	V %	Cu %	Al %	Ti %	N %	CEq %	Origin of Steel
A05T3	0,200	0,160	0,900	0,012	0,011	0,090	0,150	0,030	0,004	0,001	0,400	0,000	0,000	0,000	0,411	France
A19T3	0,190	0,180	0,830	0,014	0,013	0,060	0,160	0,031	0,004	0,001	0,350	0,000	0,000	0,000	0,382	France
A23T3	0,200	0,170	0,880	0,015	0,011	0,070	0,160	0,027	0,004	0,001	0,340	0,000	0,000	0,000	0,400	France
A26T3	0,200	0,170	0,910	0,014	0,012	0,060	0,120	0,024	0,004	0,001	0,190	0,000	0,000	0,000	0,389	France
A27T3	0,200	0,230	0,900	0,016	0,015	0,060	0,100	0,018	0,004	0,001	0,310	0,000	0,000	0,000	0,396	France
A28T3	0,200	0,170	0,900	0,015	0,014	0,060	0,080	0,014	0,004	0,001	0,280	0,000	0,000	0,000	0,389	France

- Las dimensiones y la condición superficial se hallaron satisfactorias.
- Dimension and surface condition were found acceptable.
- Les dimensions et états de surfaces sont satisfaisants.

- Los materiales citados cumplen las normas aplicables.
- Manufacturing requirements are satisfied.
- Les normes applicables sont respectées.

EL INSPECTOR
Works Inspector - L'Inspecteur

ULMA FORJA S. COOP.
Dpto. de Garantía de calidad
Quality Assurance Dept.

(*) OBSERVACIONES: Remarks / Observations: N_NORMALIZED AT 900 C AND ALLOWED TO COOL IN STILL AIR

10" STD SEAMLESS CS PIPE
A333 GR 6 B.E. - S.R.L.

PO# P7788-5B1107-80 Item# 52
Heat Number: W11306184
Trans Am Piping Products Ltd.
Shipment/Seq #: S13 - 1556 - 11 Rev'd By: SB

Jiangsu Valin-Xigang Special Steel Co., Ltd.

QRD/HLXG-36-007-S

located at: No.1, Kangqiao Road, Xingang Industrial Park,
Jingjiang City Economic Development Zone, Taizhou
Jiangsu Province, PRC
TEL:86-0523-80708043 FAX: 86-0523-80708043

MILL TEST REPORT

ACC.TO EN 10204 3.1

CUSTOMER NAME	TRANS AM				CERTIFICATE NO.	321Z00000183012-1			
CONTRACT	32120000183	L/C NO.	3FAHDS-00487	P.O. NO.	PO.CI-13-276-	DATE: 07/26/2013		PAGE:	1/3
PRODUCT	SEAMLESS CARBON STEEL PIPE FOR OIL AND GAS USE.				DELIVERY CONDITION	N (910±10℃) /34s			
SPECIFICATION	SEE SPECIFICATION NOTE								
GRADE	Gr.6+290 SS				DIMENSIONS	10"*0.365"*20FT STD			
TOTAL BUNDLES:	15	TOTAL PIECES:	43	TOTAL LENGTH:	860.56	ft	TOTAL WEIGHT:	15.784	MT

NO.	LOT No.	HEAT No.	BUNDLES	PIECES	LENGTH ft	WEIGHT MT / Wt	TENSILE TEST ASTM A370 SAMPLE TYPE/ORIENTATION/SIZE(mm)/GAUGE LENGTH(mm):S/L38/50 TS(PSI)	YS(PSI)	R0.5	EL(%)	R.A. (%)	YS/TS	FLATTENING TEST
Max.													
Min													
1	2213071101	W11306184	15	43	860.56	15.784	60465	45095		48.0			
2													

NO.	IMPACT TEST NOTCH TYPE/ORIENTATION/TEMPERATURE/SIZE (mm): KV_2 AK1 (J)	L/T.5 Av. (J)	% SHEAR AREA	-45 ℃ LE	KV_2 AK2 (J)	T/T.5 Av. (J)	% SHEAR AREA	-45 ℃ LE	NON METALIC INCLUSION	GRAIN SIZE	HARDNESS TEST NACE MR0175/ISO 15156-2(REGION 3)/MR-0103 HB
Max											
Min											
1	263/274/273		80/70/80		102/103/148		90/80/80				131.2/134.9/125.7
2											

NOTES:

W1--THE ORETICAL WEIGHT
W2--ACTUAL WEIGHT
NR--NORMALIZING ROLLED
AK1--ABSORB ENERGY FOR THE FIRST SET
SAMPLE ORIENTATION: L--LONGITUDINAL T--TRANSVERSE
SAMPLE TYPE: S--STRIP C--CLUBBED P--FULL-SECTION
Q&T--QUENCHING AND TEMPERING
AK2--ABSORB ENERGY FOR THE SECOND SET
N--NORMALIZING
A--ANNEALING
Av.--AVERAGE
LE--SIDE EXPANSION
HE--HOT EXPANDED
HR--HOT ROLLED
N&T--NORMALIZING AND TEMPERING
MT--METRIC TON

Jiangsu Valin-Xigang Special Steel Co., Ltd.

QRD/HLXG-36-007-6

located at: No.1, Kangqiao Road, Xingang Industrial Park,
Jingjiang City Economic Development Zone, Taizhou
Jiangsu Province, PRC
TEL:86-0523-80708043 FAX: 86-0523-80708043

MILL TEST REPORT

ACC.TO EN 10204 3.1

CUSTOMER NAME	TRANS AM			CERTIFICATE NO.	32120000183012-1		
CONTRACT	32I20000183	L/C NO.	3FAHD5-00487	P.O. NO.	PO.CJ-13-276-B	DATE: 07/26/2013	PAGE: 2/3
PRODUCT	SEAMLESS CARBON STEEL PIPE FOR OIL AND GAS USE.			DELIVERY CONDITION	N(910±10℃) /34a		
SPECIFICATION	SEE SPECIFICATION NOTE						
GRADE	Gr.6+290 SS			DIMENSIONS	10"*0.365"*20FT		
TOTAL BUNDLES: 15	TOTAL PIECES: 43	TOTAL LENGTH:	860.56	ft	TOTAL WEIGHT:	15.784	MT

NO.	HEAT No. / LOT No.	Type	CHEMICAL COMPOSITION (%) C	Si	Mn	P	S	Cr	Ni	Cu	Al	Mo	V	Nb	B	Pb	Mn/C	Ti	Zr	Ca	Bi	Sb	N	CE_{ITW}	CE_{PCM}	SUM1	SUM2	SUM3	R1				
	P	Max																															
		Min																															
1	W11306184	H	0.1200	0.2600	1.0500	0.0110	0.0030	0.0300	0.0600	0.0200	0.0380	0.0040	0.0030	0.0110	0.0005	0.0001	8.7500	0.0310		0.0014				0.3180									
	2213071101	P	0.1200	0.2500	1.0600	0.0100	0.0036	0.0170	0.0070	0.0190	0.0220	0.0029	0.0020	0.0110	0.0000	0.0001	8.8330	0.0270		0.0010				0.3030									
	2213071101	P	0.1300	0.2600	1.0900	0.0110	0.0031	0.0180	0.0070	0.0200	0.0220	0.0043	0.0020	0.0120	0.0004	0.0001	8.3850	0.0300		0.0010				0.3180									
2		H																															
		P																															
		P																															

NON-DESTRUCTIVE TEST

POSITION	PIPE BODY	PIPE END	BEVELLING
NDT Type(Level)	UT/L2	MPI	ACCEPTABLE
LAMINAR	ACCEPTABLE	ACCEPTABLE	SSC & HIC
TEST RESULT	ACCEPTABLE	N/A	ACCEPTABLE
RESIDUAL MQGNETISM	N/A	N/A	COATING
UT THICKNESS MEASUREMENT (50%)		N/A	
HYDROSTATIC Test Min(PSI)/(S)	2430/S	ACCEPTABLE	ACCEPTABLE

NOTES: H--HEAT ANALYSIS P--PRODUCT ANALYSIS CE--EQUIVALENT CARON R--RATIO R1=Ca /S R2=Al /N R3=Mn /C

CE_{ITW}=C+Mn/6+(Cr+Mo+V)/5+(Cu+Ni)/15 CE_{PCM}=C+Si/30+(Mn+Cr+Cu)/20+Ni/60+Mo/15+V/10+5*B

SUM1=Cr+Cu+Mo+Ni+V SUM2=Nb+V SUM3=Nb+V+Ti

L4--ACCEPT LEVEL L4,NOTCH DEPTH IS 12.5% THE SPECIFIED WALL THICKNESS. L2--ACCEPT LEVEL L2,NOTCH DEPTH IS 5% THE SPECIFIED WALL THICKNESS.

Jiangsu Valin-Xigang Special Steel Co., Ltd.

MILL TEST REPORT

ACC.TO EN 10204 3.1

QRD/HLXG-36-007-6
located at: No.1, Kangqiao Road, Xingang Industrial Park,
Jingjiang City Economic Development Zone, Taizhou
Jiangsu Province, PRC
TEL:86-0523-80708043 FA

CUSTOMER NAME	TRANS AM				CERTIFICATE NO.	32120000183012-1			
CONTRACT	32L20000183	L/C NO.	3FAHD5-00487	P.O. NO.	PO.CI-13-276-B	DATE: 07/26/2013	PAGE: 3/3		
PRODUCT	SEAMLESS CARBON STEEL PIPE FOR OIL AND GAS USE.				DELIVERY CONDITION	N (910±10℃) /34s			
SPECIFICATION	SEE SPECIFICATION NOTE								
GRADE	Gr.6+290 SS				DIMENSIONS	10"*0.365"*20FT			
TOTAL BUNDLES: 15		TOTAL PIECES: 43		TOTAL LENGTH:	860.56	ft	TOTAL WEIGHT:	15.784	MT

REMARK : 1. ORIGIN: MADE IN CHINA; 2.ALL ELEMENTS TO BE LISTED

SPECIFICATION NOTE	ASTM/ASME A/SA333-6, NACE MR-0175/ ISO 15156-2(REGION 3)/MR-0103/SS(CSA Z245.1 GR. 290 CATEGORY

We hereby certify that material herein described has been manufactured in accordance with the standards and specifications required in your order and satisfies the corresponding requirements.

This certificate is issued by a computerized system and it is valid with electroic signature. On the original certificate the trade-mark JOINTIME light-green coloured at the bottom of the page is stamped .In case the owner of the certificate would release a copy of it ,he must attest its conformity to the original one taking upon himself the responsibility for any unlawful or not allowed use.

Any alteration and/or falsification will be subject to the law.

If you need to assure the authenticity of this certificate ,please do not hesitate to contact Hengyang Valin Steel Tube CO.,LTD, E-mail: hsiec@hysteeltube.com

CUSTOMER THIRD PARTY

Quality Manager:

Auditor:

Certificate-maker: 王艳红

PO# P7788-5B1107-80 Item# 51
Heat Number: W21103747
Trans AM Piping Products Ltd. - Rev'd By: SB
Shipment/Seq #: S13 - 1440

4" STD SEAMLESS CS PIPE
A106 GR B B.E. - S.R.L.

Jiangsu Valin-Xigang Special Steel Co., Ltd.

MILL TEST REPORT

QRD/HLXG-36-007-5

located at: No.1, Kangqiao Road, Xingang Industrial Park, Jingjiang
County-level City Economic Development Zone, Taizhou
Jiangsu Province, PRC TEL:86-0523-88738666 FAX: 86-0523-88702119

ORIGINAL — ACC.TO EN 10204 3.1

CUSTOMER :	TRANS AM	L/C NO.	3PAHD5-00230	P.O.NO.	PO. C1-13-180	DATE:	2013-4-22
Product	SEAMLESS CARBON STEEL PIPE FOR OIL AND GAS USE.	Spec. No.	ASTM/ ASME A/SA53B, A/SA106B, API 5LB/X42, PSL-2, NACE MR-0175/ISO 15156-2(REGION 3) /MR-0103/SS (CSA Z245.1 GRADE 290 CATEGORY I)	Contract NO.:	32120000146	Sheet No. :	32120000146007 -1
Steel Grade	B+B+HN/X42N+290SS	Making Method	HR	Delivery State	N	ORIGIN :	MADE IN CHINA

NO.	Size (NPS)	LENGTH (FT)	Heat No.	Lot No.	PCS	WT (MT)	TOTAL LENGTH (FEET)	BDL	Tensile Test: SampleType/Orientation/Dimension/GL (mm)	T.S (Rm) PSI	Y.S(C1) PSI	E.L %(A)	P.R% (Z)	Impact Test 1 (L): Impact Sample Dimension	Akv Impact Value 0 ℃	Hardness Test: Hardness Value NACE MR0175/ISO15156-2(REGION 3)/MR-0103 HB			H.P.T PSI	Duration of Time (S)
1	4" = 0.237"	20	W21103747	2113031205	31	3.041	620.41	3	S/L25/50	71195	61335	39.5		L/S	119/120/125	155.5	153.5	156.5	2650	5
2	4" = 0.237"	20	W21103747	2113031206	90	8.829	1801.18	9	S/L25/50	72065	60320	38.0		L/S	112/122/127	151.1	152.5	154.6	2650	5
3	4" = 0.237"	20	W21103747	2113031207	97	9.515	1941.27	10	S/L25/50	71775	60030	46.0		L/S	110/117/103	156.5	156.6	158.2	2650	5
4																				
5																				

NO.	Composition Type	C	Si	Mn	P	S	Cr	Ni	Cu	Al	Mo	V	Nb	B	Ti	Mn/C	Cu	Ni	0×10^{-4}	$N\times10^{-4}$	$H\times10^{-4}$	CE_{IIW}	CE_{Pcm}
1	H	0.12	0.26	1.07	0.011	0.007	0.04	0.030	0.08	0.033	0.005	0.005	0.032	0.0004	0.032	8.92	0.003	0.00001				0.32	
	P	0.13	0.25	1.08	0.011	0.003	0.04	0.028	0.08	0.030	0.006	0.001	0.030	0.0004	0.034	8.31	0.002	0.00001				0.33	
	P	0.12	0.29	1.10	0.009	0.003	0.03	0.032	0.07	0.032	0.005	0.002	0.032	0.0003	0.033	9.17	0.002	0.00001				0.32	
2	H	0.12	0.26	1.07	0.011	0.007	0.04	0.030	0.08	0.033	0.005	0.005	0.032	0.0004	0.032	8.92	0.003	0.00001				0.32	
	P	0.12	0.26	1.10	0.010	0.003	0.04	0.029	0.06	0.030	0.004	0.002	0.032	0.0005	0.034	9.17	0.002	0.00001				0.32	
	P	0.12	0.25	1.09	0.011	0.002	0.04	0.028	0.08	0.030	0.005	0.002	0.031	0.0004	0.035	9.08	0.002	0.00001				0.32	
3	H	0.12	0.26	1.07	0.011	0.007	0.04	0.030	0.08	0.033	0.005	0.005	0.032	0.0004	0.032	8.92	0.003	0.00001				0.32	
	P	0.13	0.25	1.07	0.010	0.003	0.04	0.027	0.08	0.027	0.004	0.002	0.029	0.0005	0.031	8.23	0.002	0.00001				0.33	
	P	0.13	0.25	1.10	0.011	0.003	0.04	0.031	0.09	0.033	0.005	0.002	0.031	0.0005	0.035	8.46	0.002	0.00001				0.33	
4	H																						
	P																						
	P																						
5	H																						
	P																						
	P																						

Total Bundles	Total Pieces	TOTAL LENGTH (FEET)	Total Weight (MT)	Order Quantity	Thread Test	Drift Test	Coating	non-destructive inspection					
22	218	4352.86	21.385				conformity	PIPE BODY		PIPE END		Flatten	COLD BENDING TEST
Surface&Dimension		Pipe End (PE,BE)		SSC	HIC			EMI	L2			ok	
							resistance to CO_2		Grain Size	Thread Type (STC, LC, BT, NU, EU)		PSL(PSL1, PSL2, PSL3)	
conformity		BE		OK								PSL2	

Notes: 1-Sample Orientation:T= transv ,L= length direction. 2-Tensile Sample Type:S=Strip, R= Full-section , B=bar-shaped. 3-Yield Strength Selection: C1=Rt0.5, C2=Rt0.6, C3=Rt0.65, C3=Rt0.7. 4-Impact Sample Dimension:D1=10×10×55mm, D2=10×7.5×55mm, D3=10×6.7×55mm , D4=10×5×55mm. 5- Composition Type: R-Melting Composition, C- Product Composition. CE_{IIW}=C+Mn/6+(Cr+Mo+V)/5+(Cu+Ni)/15 CE_{Pcm}=C+Si/30+(Mn+Cr+Cu)/20+Ni/60+Mo/15+V/10+5*B GL- Gauge Length. N—NORMALIZING Q—QUENCHING HR—HOT ROLLED QT—QUENCHING AND TEMPERING NT—NORMALIZING AND TEMPERING

Remarks: 1. WE HERE CERTIFY THAT THE PRODUCTS HEREIN DESCRIBED HAS BEEN MANUFACTURE、SAMPLED TESTED AND INSPECTED IN ACCORDANCE WITH THE REQUIREMENT AND PURCHASE ORDER, AND MEET THE REQUIREMENT. TO BE RELEASED. 2. ALL PIPES BE MADE FREE OF RADIATION CONTAMINATION . 3. The Mtcn Are Issued In Duplicate. 4. FULLY KILLED. 5. IT HAS BEEN NO WELD REPAIR. 6. IT HAS BEEN NO WELD REPAIR. Original For Customer Use Only. Duplicate On File Only.

Remarks: No duplicate will be accepted

Certification-maker: 王艳红

Auditor:

Quality Manager:

PO# P6675-5B1087-80 Item# 58
Heat Number: 58912
Trans Am Piping Products Ltd. - Rev'd By: SB
Shipment/Seq #: S 12 - 1991 5

2X31/2-6 XH FS B/W PIPET A105N

INTERNATIONAL WFI NUCLEAR PRODUCTS
Manufacturer of Piping and Pressure Vessel Components
4404 Haygood St - Houston, TX 77022
Phone: 713-695-3633 Fax: 713-695-3528
A Bonney Forge Company

Sold To: TRANS AM PIPING PRODUCTS
LTD
9335 ENDEAVOR DRIVE S.E.
CALGARY AB T3S 0A1

MTR #: 242,726

PO #: CI-12-628

Sales Order #: C001216832 Date: 11/26/2012

This product has not come in direct contact with mercury or any of its compounds, nor with any mercury-containing device employing a single boundary of containment. No welding performed.
We certify that the contents of this report are correct and accurate, and that all test results and operations performed by WFI or its subcontractors are in compliance with the material specification and requirements of the referenced code or standard, and that the material conforms to the dimensional requirements of the order. This document is in accordance with EN10204 3.1.

Certified Material Test Report

Heat Code: 58912

Material: A/SA105N 09

Item	Quantity	Description
44	93	6 - 3 1/2 X 2 XS BWP A/SA105N IAW NACE MR0175/ISO 15156-2009

Chemical Composition

Ladle	C	CR	CU	MN	MO	NB	NI	P
	0.195	0.04	0.090	1.05	0.007	0.015	0.03	0.012
	S	SI	V					
	0.021	0.20	0.003					

Carbon Equivalency: Ladle 0.39

	Tensile PSI	Yield PSI	Elong %	RA %	Hardness	
Product	73,292	48,638	29.15	61.34	130 BHN	130 BHN

Normalized

Marie Dehmer
Quality Assurance Representative

4X3 STD BW RED TEE A234.WPB

PO# P9769-5B1139-80 Item# 52
Heat Number: 3A756V
Trans Am Piping Products Ltd. Rev'd By: SB
Shipment/Seq #: S 13 - 1661 36

INSPECTION CERTIFICATE

RIGID INDUSTRIES CO., LTD.

8, MEI-CHUNG RD. NIAO-SONG,
KAOHSIUNG 83301, TAIWAN
TEL: 886-77310527~8
FAX: 886-77315887

PURCHASER : SEYBOLD INT'L CORP.
STANDARD : ASTM A234 WPB-11
ASME SA234 WPB-04
CSA Z245.11-09 Gr.241 CAT I Sour Service
MATERIALS : ASTM A106 Gr.B
INSP. SPEC. : ASME B16.9 -07

DATE: 2013-10-08
ORDER NO: 7006807/CI-13-236
P.I. NO: 13C05-2
CERTIFI. NO: 13J02-5

ACCORDING TO EN10204/DIN50049/3.1

ITEM NO.	PRODUCT & SIZE	QUANTITY PCS	MFG NO.	VISUAL & DIMENTIONAL INSPECTION	HARDNESS MAX. 197 HB	HEAT TREATMENT (NOTE)	MAGNETIC PARTICLE EXAMINATION	
2	ELL 90 LR 2" S160	200	2C1000	GOOD	143-152	N		
3	ELL 90 LR 3" STD	500	3E732V	GOOD	128-140	A		
4	CON-RED 6X2" STD	25	3E071V	GOOD	132-141	N		
5	CON-RED 6X2" XH	15	3E061V	GOOD	136-146	N		
6	ECC-RED 10X6" STD	15	3A742V	GOOD	105-115	N		
7	RED-TEE 4X3" STD	75	3A756V	GOOD	128-140	N	GOOD	

ITEM NO.	MATERIAL CHARGE NO.		CHEMICAL COMPOSITION %											PHYSICAL TEST *				
			C x100	Si x100	Mn x100	P x1000	S x1000	Cu x100	Ni x100	Cr x100	Mo x100	V x100	Nb x1000	Y S KSI	T S KSI	E %	**	C.E. X100
	STANDARD	MIN.		10	29									35.0	60.0			
		MAX.	30	35	135	50	58	40	40	40	15	8	20		95.0			50
2	318300		18	24	55	7	2	4	3	5	3	<1	<1	43.8	65.7	31.5	L	29
3	1226772V		15	21	84	12	2	6	2	4	1	<1	2	44.7	70.0	32.2	L	31
4	1215161V		15	24	83	10	2	4	2	4	1	<1	1	42.8	67.6	31.4	L	30
5	1215163V		14	23	84	10	4	5	2	4	2	<1	1	43.4	68.4	31.2	L	30
6	1232162V		15	17	84	12	9	6	3	3	1	<1	1	44.1	67.3	30.8	L	30
7	1226636V		15	24	88	12	2	5	2	4	1	<1	1	42.8	67.6	31.0	L	31

(NOTE):A:HOT FORMED WITH FINAL TEMPERATURE BETWEEN 620℃-980℃,AIR COOLING.
N:NORMALIZING AT TEMPERATURE 880℃X0.5HR,AIR COOLING.
NACE MR-01-75-09/ISO15156.2 ,NACE MR 0103-10;SATISFACTORY

WE HEREBY CERTIFY THAT THE PRODUCT DESCRIBED HEREIN HAS BEEN MANUFACTURED IN ACCORDANCE WITH THE SPECIFICATIONS CONCERNED AND ALSO WITH THE PURCHASER'S REQUIREMENTS AND THAT THE TEST RESULTS SHOWN HEREIN ARE CORRECT.

* TYPE OF SPECIMEN:STRIP(WIDTH:1 in./GAUGE LENGTH:2 in.) ** SAMPLING DIRECTION:L=LONGITUDINAL T=TRANSVERSE

Ou C Lan

MANAGER OF Q.A. DEPT.

ASME SECTION II
EDITION 2013

4" STD BW CAPS A234-WPB

PO# P7429-5B1100-80 Item# 2
Heat Number: 12F30103
Trans Am Piping Products Ltd. - Rev'd By: SB
Shipment/Seq #: S12 - 1641 14

5BLUE QC DEPT
CHEM SELECT
VERIFIED BY:

Thai Benkan Co., Ltd.
58 Soi Watkrunai, Bangkru, Prapadaeng,
Samutprakarn, 10130 Thailand.

INSPECTION CERTIFICATE

TO EN10204 3.1

Purchaser : TRANS-AM PIPING PRODUCTS LTD.

E-No. MC-668 | Purchase Order No. CI-11-781 | Job No. | D M Y Certificate No. 25/7/2012 | 20121307

No.		MFG. No.	Specification for Material Made from Seamless Pipe	Specification for Inspection	Visual Examination	Dimensional Inspection
			ASTM A234-11/ASME SA234-10 Gr WPB	ASME B16.9-2007, B16.25-2007	Good	Good
			Product Form (T*1)	Q'ty	Heat Treatment (Note 1)	Hardness Actual Data
1		12F30103	C WPB 4 S40	64/250	N	HB: 130 - 145
2		12F30103	C WPB 6 S40	3/125	N	HB: 135 - 150
3						
4						
5						

Specification / Material Heat No.		Chemical Composition % C	Si	Mn	P	S	Cu	Ni	Cr	Mo	V	Nb	C.E.	Tension Test *2 YS	TS	E	
		x 100	x 100	x 100	x 1000	x 1000	x 100	x 100	x 100	x 100	x 1000	x 1000	x 100	MPa			
Min.																	HARDNESS MAX
Max.														240		30	197 HB : GOOD
		30		1063	50									655			
1	23558	18	19	79	12	3	1	1	3	0	0	0	32	363	446	39	
2	23240	19	18	79	10	3	2	1	3	0	0	0	30	365	465	40	
3																	
4																	
5																	

(Note 1) A : Hot formed with final temperature between 620°C-980°C, Air Cooling N : Normalizing 910°C x0.5 HR. Air Cooling *N : Normalizing 910°C x0.5 HR. Air Cooling (Specification for material made from plate) S : Stress Relieving 675° C x0.5 HR. Air Cooling

C.E. = C+Mn/6+(Cr+Mo+V)/5+(Ni+Cu)/15

The fittings was manufactured sampled tested and inspected in accordance with the specification and was found to meet the requirements.

MAGNETIC PARTICLE EXAMINATION FOR TEE ONLY

We hereby certify that the product described herein has been manufactured in accordance with the specifications concerned and also with the purchaser's requirements and that the test results shown herein are correct.

Rungrapa Kamplearson
Quality Assurance Manager
Thai Benkan Co., Ltd.

*1 : "T" symbolized wall thickness in mm. * 2 : YS Yield strength TS = Tensile strength E = Elongation

Form TZ-6A/3

COPY ORIGINAL

10" CL 150 W/N FLANGE RF STD
BORE A350-LF2 CL 1

PO# P7988-5B1107-80 Item# 2
Heat Number: 11/39286
Trans Am Piping Products Ltd.
Shipment/Seq #: S12 - 1348 - Rev'd By: SB

METALFAR
PRODOTTI INDUSTRIALI S.P.A.
STAMPAGGIO A CALDO DI ACCIAI COMUNI - LEGATI E INOSSIDABILI

SEDE AMMINISTRATIVA E STABILIMENTO:
23851 COSANA BRIANZA (LC) - Italy
Via G. Parini, 28
Tel. +39 031.655441
Fax +39 031.655149
quality.mf@tiscali.com

COMPANY WITH QUALITY MANAGEMENT SYSTEM CERTIFIED BY DNV
= ISO 9001:2008 =

SALA PROVE E ANALISI MATERIALI / MATERIAL TEST DEPARTMENT

CERTIFICATO DI COLLAUDO SECONDO EN 10204 - 3.1 INSPECTION CERTIFICATE

Certif. N. 1815	Del/Dated 12.04.2012	Fattura / Invoice N. 1228	Del/Dated 12.04.2012
DDT / Del Note N. 1446	Del/Dated 12.04.2012	No.Ord. / Our ref. N.	Del/Dated

TRANS AM PIPING PRODUCTS LTD 9335 ENDEAVOR DRIVE S.E. T3S 0A1 CALGARY, ALBERTA CA	Dest.: F.F.F. c/o TRANS AM PIPING PRODUCTS LTD 9335 Endeavor Drive S.E. T3S 0A1 CALGARY, ALBERTA CA

COD. COL. / HEAT CODE	COLATA / HEAT	POS. / ITEM	VS.ORDINE / YOUR REFERENCE	Q.TA' / Q.TY	DESCRIZIONE / DESCRIPTION	DIM.IN ACC. A / DIM. ACCORDANCE TO	VISIVO E DIMENS. / VIS. & DIMENS.
	11/39286	006	3878/TRANS AM	66,00	W/N 150 RF 10" STD LF2CL1	ASME/ANSI B16.5 -2009	SATISFACTORY

MATERIALE / MATERIAL	C%	Si%	Mn%	S%	P%	Cr%	Ni%	Mo%	Ti%	Cu%	V%	Nb%	N%	Al%	C.E.%
ASTM A350 LF2 CL1/2 (LADLE)	0,190	0,240	1,090	0,009	0,010	0,100	0,060	0,010	0,017	0,120	0,005	0,001	0,000	0,025	0,407

PROVETTA / TEST SPECIMEN SEZ. mm2 / SECT. mm2	LUNG. mm / LENGHT mm	FORMA / SHAPE 1=○ 2=□	SNERVAMENTO / YIELD POINT N/mm2 >=0,2%	ROTTURA / TENSILE STRENGHT N/mm2 >=	ALLUNGAMENTO / ELONGATION %>=	CONTRAZIONE / REDUCTION OF AREA %>=	DUREZZA / HARDNESS HBW	RESILIENZA / IMPACT TEST - JOULE/cm2 TIPO / TYPE 10x10mm	°C	1	2	3	SNERVAMENTO / YIELD POINT N/mm2 >=1,0%	Ns.Rif. / OUR REF.
126,60	50,80	1	351,0	538,0	31,0	60,0	159,0 - 163,0	KV	-50	67	66	69	0,0	

MATERIALE IN ACCORDO A / MATERIAL IN ACC. TO
ASTM/ASME A 350/SA 350 M - 11 ASME CODE SECT. II, PART A, ED. 2010
CSA Z245.12 GRADE 248 CAT.II

TRATTAMENTO TERMICO / HEAT TREATMENT
NORMALIZED AT 930 C - COOLED IN STILL AIR

FORNO / FURNACE
ELECTRIC FURNACE

ORIGINE / ORIGIN
EUROPE

NOTE / NOTES	UFFICIO CONTROLLO QUALITA' / QUALITY CONTROL DEPARTEMENT	ENTE UFFICIALE DI COLLAUDO / INSPECTION AUTHORITY	MARCHIO PRODUZIONE / MANUFACTURER'S SYMBOL
MANUFACTURING IN ACCORDANCE WITH ORDER AND SPECIFICATION MATERIAL IN ACCORDANCE WITH NACE MR-0175/2003 ISO 15156-2003 MATERIAL IN ACCORDANCE WITH NACE MR-0103/2010	S. Carù		MFF

8" CL 150 W/N FLANGE RF STD
BORE A105N

PO# P7113-5B1093-80 Item# 28
Heat Number: 800A2
Trans Am Piping Products Ltd. - Rev'd By: SB
Shipment/Seq #: S13 - 1094 - 1

CLIENTE / Customer / Client

TRANS AM PIPING PRODUCTS LTD.
9335 ENDEAVOR DRIVE S.E.
CALGARY, ALBERTA T3S 0A1
CANADA

CERTIFICADO DE INSPECCION

Inspection Certificate - Certificat de Réception

DIN EN 10204 / 3.1
ISO 10474 / 3.1

FECHA: Date: 01/02/2013 | N.º No. 154688 | HOJA: Page: 1

SGI 1922164 SGI 6000236 SGI 6009987

ULMA FORJA, S.COOP.
Bº Zubillaga, 3 - Apdo. 14
20560 OÑATI (Gipuzkoa) SPAIN
Tel.: 34 - 943 780552
Fax: 34 - 943 781808
E-mail: ulma@ulmapiping.com

PRODUCTO Article - Produit: **FLANGES**

SU PEDIDO N.º Your Order No. / Votre Cde. N.º: **PO# CI-13 - 135**

DE af. - de: **22/01/2013**

Certified acc. PED 97/23/EC+AD2000-W0 by TÜV Rheinland N.º 01 202 EIQ 02 7443

Packing List: 99675

NORMAS APLICABLES Requirements - Normes Applicables: **ASME B16.5-09**

MARCA DEL FABRICANTE Mark of factory / Marque du fabricant

MATERIAL CORRESPONDIENTE Material Correspondent - Qualité: **ASTM/ASME A/SA105N-11a**

MODO DE FUSION (*) Steel Making - Elaboration de l'acier (E = Elec. Y = Oxigeno básico): **NACE MR0175/ISO15156-2-09 & MR0103-12 Clause 7.2.1.4, Annex A.2 and SSC Region 3. CSA-Z245.12-09 GR248 CAT I -SS (WN & BLIND FLANGES ONLY)**

DEPARTAMENTO Section / Département: **QUALITY ASSURANCE**

PARTIDA Item Poste	CANTIDAD Quantity Quantité	DESCRIPCION Description Description	OBSERVACIONES Remarks Observations (*)	COLADA N.º Heat No N.ºCoulée	RESISTENCIA T.Strength Resist Rupt N/mm2	LIMITE ELAST. Y.Strength 0.2 % N/mm2	ALARGAM. Elongation Allongement Lo: 4 d %	ESTRICCION Red. Area Striction %	RESILIENCIA Impact test Résilience Joules	PROBETA - SPECIMEN CHARPY V 10x10mm MEDIA Average Moyenne	°C	DUREZA Hardness Dureté HBW
2	504	WN 8 150LB STD/40 RF A105N ⟸	NE	800A2	523	312	28,70	59,60				153 158
2	72	WN 8 150LB STD/40 RF A105N	NE	819T2	506	304	28,20	56,80				152 157
19	324	WN 6 600LB XS/80 RF A105N	NE	664V2	518	307	28,90	58,90				147 152

COLADA N.º Heat No N.ºCoulée	COMPOSICION QUIMICA - STEEL MAKER'S LADLE ANALYSIS - ANALYSE CHIMIQUE														
	C %	Si %	Mn %	P %	S %	Cr %	Ni %	Mo %	Nb %	V %	Cu %	Al %	Ti %	N %	CEq %
664V2	0,200	0,200	0,940	0,015	0,007	0,060	0,110	0,020	0,000	0,004	0,328	0,024	0,000	0,000	0,403
800A2	0,200	0,211	0,910	0,009	0,007	0,049	0,062	0,011	0,006	0,005	0,147	0,028	0,000	0,000	0,379 ⟸
819T2	0,200	0,180	0,940	0,021	0,013	0,050	0,130	0,032	0,001	0,003	0,290	0,000	0,000	0,000	0,402

- *Las dimensiones y la condición superficial se hallaron satisfactorias.*
- *Dimension and surfaces condition were found acceptable.*
- *Les dimensions et états de surface sont satisfaisants.*

- *Los materiales citados cumplen las normas aplicables.*
- *Manufacturing requirements are satisfied.*
- *Les normes applicables sont respectées.*

EL INSPECTOR
Works Inspector - L'Inspecteur

ULMA FORJA S. COOP.
Dpto. de Garantía de calidad
Quality Assurance Dept.

(*) OBSERVACIONES: Remarks / Observations: N_NORMALIZED AT 900 C AND ALLOWED TO COOL IN STILL AIR

BLUE QC DEPT
CHEM SELECT
VERIFIED BY:

4" CL 150 W/N FLANGE RF STD
BORE A105N

PO# P7113-5B1093-80 Item# 25
Heat Number: 12/35152
Trans Am Piping Products Ltd.
Shipment/Seq #: S13 - 5122 - 1 Rev'd By: VI

METALFAR
PRODOTTI INDUSTRIALI S.P.A.
STAMPAGGIO A CALDO DI ACCIAI COMUNI - LEGATI E INOSSIDABILI

SEDE AMMINISTRATIVA E STABILIMENTO:
23861 CESANA BRIANZA (LC) - Italy
Via G. Parini, 28
Tel. +39.031.565441
Fax +39.031.655149
quality.mf@tiscali.com

COMPANY WITH QUALITY SYSTEM
CERTIFIED BY DNV = ISO 9001 =

SALA PROVE E ANALISI MATERIALI / MATERIAL TEST DEPARTMENT

CERTIFICATO DI COLLAUDO SECONDO EN 10204 - 3.1 INSPECTION CERTIFICATE

Certif. N. 1312	Del/Dated 01.03.2013	Fattura / Invoice N. 885	Del/Dated 28.02.2013
DDT / Del Note N. 1020	Del/Dated 28.02.2013	Ns.Ord. / Our ref. N.	Del/Dated

TRANS AM PIPING PRODUCTS LTD
9335 ENDEAVOR DRIVE S.E.
T3S 0A1 CALGARY, ALBERTA CA

Dest.: TRANS AM "PROJECT" Warehouse
1711 - 66 Avenue
T6P 1Y9 Edmonton, ALBERTA CA

COD. COL. COLATA / HEAT CODE HEAT	POS. ITEM	VS.ORDINE / YOUR REFERENCE	Q.TA' / Q.TY	DESCRIZIONE / DESCRIPTION	DIM.IN ACC. A / DIM. ACCORDANCE TO	VISIVO E DIMENS. / VIS. & DIMENS.
09/77929	024	PI-12-35432	1,00	CP. OR WN 300/600 RF 2" XS A105N	ASME/ANSI B16.36 -2009	SATISFACTORY

MATERIALE / MATERIAL	C%	Si%	Mn%	S%	P%	Cr%	Ni%	Mo%	Ti%	Cu%	V%	Nb%	N%	Al%	C.E.%
ASTM A105 (LADLE)	0,195	0,240	0,960	0,011	0,012	0,100	0,060	0,010	0,008	0,160	0,001	0,001	0,009	0,021	0,397

PROVETTA / TEST SPECIMEN SEZ. mm2 SECT. mm2	LUNG. mm LENGHT mm	FORMA SHAPE 1=○ 2=□	SNERVAMENTO YIELD POINT N/mm2 >=0,2%	ROTTURA TENSILE STRENGHT N/mm2 >=	ALLUNGAMENTO ELONGATION %>=	CONTRAZIONE REDUCTION OF AREA %>=	DUREZZA HARDNESS HBW	RESILIENZA / IMPACT TEST - JOULE/cm2 TIPO / TYPE 10x10mm	°C	1	2	3	SNERVAMENTO YIELD POINT N/mm2 >=1,0%	Ns.Rif. OUR REF.
126,60	50,80	1	334,0	540,0	33,0	58,0	164,0 - 166,0	KV	20	90	83	87	0,0	

MATERIALE IN ACCORDO A / MATERIAL IN ACC. TO
ASTM/ASME A 105/SA 105 M - 11 ASME CODE SECT. II, PART A, ED. 2010 ADD. 2011a
CSA Z245.12 GRADE 248 CAT.I SOUR SERVICE

TRATTAMENTO TERMICO / HEAT TREATMENT
NORMALIZED AT 920 C - COOLED IN STILL AIR

FORNO / FURNACE
ELECTRIC FURNACE

ORIGINE / ORIGIN OF STEEL
EUROPEAN UNION

COD. COL. COLATA / HEAT CODE HEAT	POS. ITEM	VS.ORDINE / YOUR REFERENCE	Q.TA' / Q.TY	DESCRIZIONE / DESCRIPTION	DIM.IN ACC. A / DIM. ACCORDANCE TO	VISIVO E DIMENS. / VIS. & DIMENS.
12/35152	003	PI-12-35486	70,00	W/N 150 RF 4" STD A105N	ASME/ANSI B16.5 -2009	SATISFACTORY

MATERIALE / MATERIAL	C%	Si%	Mn%	S%	P%	Cr%	Ni%	Mo%	Ti%	Cu%	V%	Nb%	N%	Al%	C.E.%
ASTM A105 (LADLE)	0,185	0,230	0,930	0,008	0,005	0,100	0,060	0,010	0,015	0,160	0,002	0,001	0,009	0,025	0,377

PROVETTA / TEST SPECIMEN SEZ. mm2 SECT. mm2	LUNG. mm LENGHT mm	FORMA SHAPE 1=○ 2=□	SNERVAMENTO YIELD POINT N/mm2 >=0,2%	ROTTURA TENSILE STRENGHT N/mm2 >=	ALLUNGAMENTO ELONGATION %>=	CONTRAZIONE REDUCTION OF AREA %>=	DUREZZA HARDNESS HBW	RESILIENZA / IMPACT TEST - JOULE/cm2 TIPO / TYPE 10x10mm	°C	1	2	3	SNERVAMENTO YIELD POINT N/mm2 >=1,0%	Ns.Rif. OUR REF.
126,60	50,80	1	346,0	508,0	32,0	60,0	156,0 - 159,0	KV	20	87	83	83	0,0	

MATERIALE IN ACCORDO A / MATERIAL IN ACC. TO
ASTM/ASME A 105/SA 105 M - 11 ASME CODE SECT. II, PART A, ED. 2010 ADD. 2011a
CSA Z245.12 GRADE 248 CAT.I SOUR SERVICE

TRATTAMENTO TERMICO / HEAT TREATMENT
NORMALIZED AT 920 C - COOLED IN STILL AIR

FORNO / FURNACE
ELECTRIC FURNACE

ORIGINE / ORIGIN OF STEEL
EUROPEAN UNION

SPLINE QC DEPT
CHECK SELECT
VERIFIED BY:

NOTE / NOTES	UFFICIO CONTROLLO QUALITA' / QUALITY CONTROL DEPARTEMENT	ENTE UFFICIALE DI COLLAUDO / INSPECTION AUTHORITY	MARCHIO PRODUZIONE / MANUFACTURER'S SYMBOL
100% MANUFACTURED IN ITALY MANUFACTURING IN ACCORDANCE WITH ORDER AND SPECIFICATION MATERIAL IN ACCORDANCE WITH NACE MR-0175/2009 ISO 15156-2009 - SOUR SERVICE MATERIAL IN ACCORDANCE WITH NACE MR-0103/2012 - SOUR SERVICE	S. Erigolio		MF

PO# P7986-5B1107-00 Item# 1
Heat Number: 13/76388
Trans Am Piping Products Ltd. - Rev'd By: SB
Shipment/Seq #: S13 - 1534

3" CL 150 W/N FLANGE RF STD
BORE A105N

METALFAR
PRODOTTI INDUSTRIALI S.P.A.
STAMPAGGIO A CALDO DI ACCIAI COMUNI - LEGATI E INOSSIDABILI
SEDE AMMINISTRATIVA E STABILIMENTO
20851 CESANA BRIANZA (LC) - ITALY
Via G. Parini, 28
Tel. +39 031.655441
Fax +39 031.655140
quality.m@metalfar.com

COMPANY WITH QUALITY SYSTEM
CERTIFIED BY DNV = ISO 9001 =

SALA PROVE E ANALISI MATERIALI / MATERIAL TEST DEPARTMENT

CERTIFICATO DI COLLAUDO SECONDO EN 10204 - 3.1 INSPECTION CERTIFICATE

Certif. N. 4342	Del/Dated 29.07.2013	Fattura / Invoice N. 2954	Del/Dated 29.07.2013
DDT / Del Note N. 3428	Del/Dated 29.07.2013	Ns.Ord. / Our ref. N. 0	Del/Dated

TRANS AM PIPING PRODUCTS LTD	Dest.: TRANS AM PIPING PRODUCTS LTD
9335 ENDEAVOR DRIVE S.E.	9335 - Endeavor Drive S.E.
T3S 0A1 CALGARY, ALBERTA CA	T3S 0A1 Calgary, ALBERTA CA

COD. COL. COLATA / HEAT CODE HEAT	POS. ITEM	VS.ORDINE / YOUR REFERENCE	Q.TA' / Q.TY	DESCRIZIONE / DESCRIPTION	DIM.IN ACC. A / DIM. ACCORDANCE TO	VISIVO E DIMENS. / VIS. & DIMENS.
13/76389	004	CI-12-430	253,00	W/N 150 RF 3" STD A105N ⟸	ASME/ANSI B16.5 -2009	SATISFACTORY

MATERIALE / MATERIAL	C%	Si%	Mn%	S%	P%	Cr%	Ni%	Mo%	Ti%	Cu%	V%	Nb%	N%	Al%	C.E.%
ASTM A105 (LADLE)	0,185	0,240	0,880	0,010	0,014	0,170	0,110	0,010	0,035	0,190	0,003	0,002	0,009	0,029	0,388

PROVETTA / TEST SPECIMEN SEZ. mm2 / SECT. mm2	LUNG. mm / LENGHT mm	FORMA / SHAPE 1=⌀ 2=□	SNERVAMENTO / YIELD POINT N/mm2 >=0,2%	ROTTURA / TENSILE STRENGHT N/mm2 >=	ALLUNGAMENTO / ELONGATION %>=	CONTRAZIONE / REDUCTION OF AREA %>=	DUREZZA / HARDNESS HBW	RESILIENZA / IMPACT TEST - JOULE/cm2 TIPO / TYPE 10x10mm	C	1	2	3	SNERVAMENTO / YIELD POINT N/mm2 >=1,0%	Ns.Rif. / OUR REF.
126,69	50,80	1	314,0	510,0	34,0	60,0	154,0 - 156,0	KV	20	90	80	86	0,0	

MATERIALE IN ACCORDO A / MATERIAL IN ACC. TO
ASTM/ASME A 105/SA 105 M - 11a ASME CODE SECT. II, PART A, ED. 2010
ADD. 2011a
CSA Z245.12 GRADE 248 CAT.I SOUR SERVICE

TRATTAMENTO TERMICO / HEAT TREATMENT
NORMALIZED AT 920 C - COOLED IN STILL AIR

FORNO / FURNACE
ELECTRIC FURNACE

ORIGINE / ORIGIN OF STEEL
EUROPEAN UNION

COD. COL. COLATA / HEAT CODE HEAT	POS. ITEM	VS.ORDINE / YOUR REFERENCE	Q.TA' / Q.TY	DESCRIZIONE / DESCRIPTION	DIM.IN ACC. A / DIM. ACCORDANCE TO	VISIVO E DIMENS. / VIS. & DIMENS.
13/37316	007	CI-12-430	23,00	W/N 150 RF 6" STD A105N	ASME/ANSI B16.5 -2009	SATISFACTORY

MATERIALE / MATERIAL	C%	Si%	Mn%	S%	P%	Cr%	Ni%	Mo%	Ti%	Cu%	V%	Nb%	N%	Al%	C.E.%
ASTM A105 (LADLE)	0,200	0,210	1,040	0,006	0,012	0,100	0,069	0,010	0,017	0,140	0,001	0,001	0,009	0,026	0,409

PROVETTA / TEST SPECIMEN SEZ. mm2 / SECT. mm2	LUNG. mm / LENGHT mm	FORMA / SHAPE 1=⌀ 2=□	SNERVAMENTO / YIELD POINT N/mm2 >=0,2%	ROTTURA / TENSILE STRENGHT N/mm2 >=	ALLUNGAMENTO / ELONGATION %>=	CONTRAZIONE / REDUCTION OF AREA %>=	DUREZZA / HARDNESS HBW	RESILIENZA / IMPACT TEST - JOULE/cm2 TIPO / TYPE 10x10mm	C	1	2	3	SNERVAMENTO / YIELD POINT N/mm2 >=1,0%	Ns.Rif. / OUR REF.
126,69	50,80	1	335,0	520,0	31,0	60,0	156,0 - 158,0	KV	20	84	88	82	0,0	

MATERIALE IN ACCORDO A / MATERIAL IN ACC. TO
ASTM/ASME A 105/SA 105 M - 11a ASME CODE SECT. II, PART A, ED. 2010
ADD. 2011a
CSA Z245.12 GRADE 248 CAT.I SOUR SERVICE

TRATTAMENTO TERMICO / HEAT TREATMENT
NORMALIZED AT 920 C - COOLED IN STILL AIR

FORNO / FURNACE
ELECTRIC FURNACE

ORIGINE / ORIGIN OF STEEL
EUROPEAN UNION

NOTE / NOTES	UFFICIO CONTROLLO QUALITA' / QUALITY CONTROL DEPARTEMENT	ENTE UFFICIALE DI COLLAUDO / INSPECTION AUTHORITY	MARCHIO PRODUZIONE / MANUFACTURER'S SYMBOL
100% MANUFACTURED IN ITALY MANUFACTURING IN ACCORDANCE WITH ORDER AND SPECIFICATION MATERIAL IN ACCORDANCE WITH NACE MR-0175/2009 ISO 15156-2009 - SOUR SERVICE MATERIAL IN ACCORDANCE WITH NACE MR-0103/2012 - SOUR SERVICE			

2" CL 150 W/N FLANGE RF XH
BORE A105N

PO# P7017-5B1070-30 Item# 13
Heat Number: A43T3
Trans Ang Piping Products Ltd. - Rev'd By: SG
Shipment/Seq #: S 13 - 1571

CLIENTE / Customer / Client

FORGINGS FLANGES&FITTINGS LLC.
6300 RAILWOOD DRIVE,
SUITE B
HOUSTON, TX 77076
USA

CERTIFICADO DE INSPECCION

Inspection Certificate - Certificat de Réception

DIN EN 10204 / 3.1
ISO 10474 / 3.1

FECHA: Date 22/04/2013
Nº No. 153922
HOJA: Page 1

ULMA FORJA, S.COOP.

PRODUCTO Artículo - Product: FLANGES

SU PEDIDO Nº Your Order No. 174147-HOUSTON
Vuestro Ped. Nº

DE dd - de 05/03/2013

NORMAS APLICABLES Requirements - Normes Applicables: ASME B16.5-13

MATERIAL CORRESPONDIENTE Material Correspondent - Qualité: ASTM/ASME A/SA105N-12

MODO DE FUSION (*) Steel Making - Elaboration De Facter: MACE

E = Elec. Y = Oxigeno básico

EN10217-5/SO15156-2-09 & EN10083-12

Certified acc. PED 97/23/EC+AD2000-WO by TÜV Rheinland Nº 01 202 EQ 02 7440

MARCA DE FABRICANTE Mark of factory Marque du fabricant

DEPARTAMENTO Section Département: QUALITY ASSURANCE

S/ Zubillaga, 3 - Apdo. 14
20560 OÑATI (Gipuzkoa) ESPAÑA
Tel.: 34 - 943 7808 00
Fax: 34 - 943 781263
E-mail: ulma@ulmaforja.com

Packing List: 1018/13

PARTIDA Item Posto	CANTIDAD Quantity Quantité	DESCRIPCION Description Description	OBSERVACIONES Remarks Observations (*)	COLADA Nº Heat No Nº Coulée	TRACCION Tensile Strength Rm N/mm²	LIMITE ELASTICO Yield Strength 0,2 % N/mm²	ALARGAMIENTO Elongation Lo/Ao %	ESTRICCION Red. Area Striction %	RESILIENCIA Impact test Résilience Joules	CHARPY V (ISO-V) KCV Energía J	°C	DUREZA Hardness Dureté HBW
2 PTWA020	492	WN 2 150LB XS/80 RF A105N	NE	A31T3	521	317	29,70	58,70				151 155
2 PTWA020	452	WN 2 150LB XS/80 RF A105N	NE	A43T3	516	318	29,70	59,50				152 155

COLADA Nº Heat No Nº Coulée	COMPOSICION QUIMICA - STEEL MAKER'S LADLE ANALYSIS - ANALYSE CHIMIQUE															
	C %	Si %	Mn %	P %	S %	Cr %	Ni %	Mo %	Nb %	V %	Cu %	Al %	Ti %	N %	CEq %	Origin of Steel
A31T3	0,200	0,180	0,960	0,016	0,011	0,040	0,070	0,014	0,003	0,001	0,210	0,030	0,003	0,009	0,390	France
A43T3	0,200	0,190	0,870	0,015	0,008	0,030	0,170	0,035	0,004	0,001	0,200	0,032	0,000	0,009	0,384	France

- Las dimensiones y la condición superficial se hallan satisfactorias.
- Dimension and surface condition were found acceptable.
- Les dimensions et l'état de surface sont satisfaisants.

- Los materiales citados cumplen las normas aplicadas.
- Manufacturing requirements are satisfied.
- Les normes applicables sont respectées.

EL INSPECTOR
Works Inspector - L'Inspecteur

ULMA FORJA S. COOP.
Dpto. de Garantía de calidad
Quality Assurance Dept.

(*) OBSERVACIONES:
Remarks
Observations: N_NORMALIZED AT 900 C AND ALLOWED TO COOL IN STILL AIR

FLANGE QC DEPT
FINAL SELECT
VERIFIED BY:

INTERNATIONAL WFI NUCLEAR PRODUCTS
Manufacturer of Piping and Pressure Vessel Components
4407 Haygood St - Houston, TX 77022
Phone: 713-695-3633 Fax: 713-695-3528
A Bonney Forge Company

Sold To: TRANS AM PIPING PRODUCTS
LTD
9335 ENDEAVOR DRIVE S.E.
CALGARY AB T3S 0A1

MTR #: 221,555

PO #: CI-11-742

Sales Order #: C001200012 Date: 01/04/2012

This product has not come in direct contact with mercury or any of its compounds, nor with any mercury-containing device employing a single boundary of containment. No welding performed.

We certify that the contents of this report are correct and accurate, and that all test results and operations performed by WFI or its subcontractors are in compliance with the material specification and requirements of the referenced code or standard, and that the material conforms to the dimensional requirements of the order. This document is in accordance with EN10204 3.1.

Certified Material Test Report

Heat Code: 58581

Material: A/SA105N 09

Item	Description
6	36 - 1 1/2 X 3/4 3M THP A/SA105N

Chemical Composition

Ladle	C	CR	CU	MN	MO	NB	NI	P
	0.200	0.04	0.050	1.00	0.010	0.016	0.02	0.008
	S	SI	V					
	0.020	0.20	0.004					

Carbon Equivalency: Ladle 0.38

Product	B	C	CR	CU	MN	MO	Nb	NI
	<0.0002	0.196	0.04	0.057	1.01	0.006	0.017	0.03
	P	S	SI	Ti	V			
	0.003	0.011	0.21	0.0012	0.010			

Carbon Equivalency: Product 0.38

	Tensile PSI	Yield PSI	Elong %	RA %	Hardness	
Product	71,878	47,811	36.50	64.47	135 BHN	135 BHN

Normalized

IAW NACE MR0175/ ISO 15156- 2009

Marie Dehmer
Quality Assurance Representative

INTERNATIONAL WFI NUCLEAR PRODUCTS
Manufacturer of Piping and Pressure Vessel Components
4404 Haygood St - Houston, TX 77022
Phone: 713-695-3633 Fax: 713-695-3528
A Bonney Forge Company

Sold To: TRANS AM PIPING PRODUCTS
LTD
9335 ENDEAVOR DRIVE S.E.
CALGARY AB T3S 0A1

MTR #: 247,681

PO #: CI-13-194

Sales Order #: C001302384 Date: 02/18/2013

This product has not come in direct contact with mercury or any of its compounds, nor with any mercury-containing device employing a single boundary of containment. No welding performed.
We certify that the contents of this report are correct and accurate, and that all test results and operations performed by WFI or its subcontractors are in compliance with the material specification and requirements of the referenced code or standard, and that the material conforms to the dimensional requirements of the order. This document is in accordance with EN10204 3.1.

Certified Material Test Report

Heat Code: 58848

Material: A/SA105N 09

Item	Quantity	Description
6	500	36 - 1 1/2 X 3/4 3M THP A/SA105N

Chemical Composition

	C	CR	CU	MN	MO	NB	NI	P
Ladle	0.198	0.04	0.100	1.03	0.006	0.011	0.03	0.011
	S	SI	V					
	0.018	0.21	0.004					

Carbon Equivalency: Ladle 0.39

	C	CR	CU	MN	MO	NI	P	S
Product	0.000	0.00	0.000	0.00	0.000	0.00	0.000	0.000
	SI	V						
	0.00	0.000						

	Tensile PSI	Yield PSI	Elong %	RA %	Hardness	
Product	80,000	51,000	27.00	65.00	161 BHN	165 BHN

Normalized

IAW NACE MR0175/ ISO 15156-2009

Marie Dehmer
Quality Assurance Representative

4" CL 300 W/N FLANGE RF STD
BORE A105N

PO# P7622-5B1108-80 Item# 46
Heats Number: 112/34084
Trans Am Piping Products Ltd.
Shipment/Seq #: S13 - 1341
Rev'd By: SB - 2

METALFAR
PRODOTTI INDUSTRIALI S.P.A.
STAMPAGGIO A CALDO DI ACCIAI COMUNI - LEGATI E INOSSIDABILI

SEDE AMMINISTRATIVA E STABILIMENTO:
23861 CESANA BRIANZA (LC) - Italy
Via G. Parini, 28
Tel. +39 031.655441
Fax +39 031.655149
quality.mff@farmas.com

COMPANY WITH QUALITY SYSTEM
CERTIFIED BY DNV = ISO 9001 =

SALA PROVE E ANALISI MATERIALI / MATERIAL TEST DEPARTMENT

CERTIFICATO DI COLLAUDO SECONDO EN 10204 - 3.1 INSPECTION CERTIFICATE

Certif. N. 2651	Del/Dated 08.05.2013	Fattura / Invoice N. 1756	Del/Dated 07.05.2013
DDT / Del Note N. 2012	Del/Dated 07.05.2013	Ns.Ord. / Our ref. N.	Del/Dated

TRANS AM PIPING PRODUCTS LTD
9335 ENDEAVOR DRIVE S.E.
T3S 0A1 CALGARY, ALBERTA CA

Dest.: TRANS AM PIPING PRODUCTS LTD
9335 - Endeavor Drive S.E.
T3S 0A1 Calgary, ALBERTA CA

COD. COL. / HEAT CODE	COLATA / HEAT	POS. / ITEM	VS.ORDINE / YOUR REFERENCE	Q.TA' / Q.TY	DESCRIZIONE / DESCRIPTION	DIM.IN ACC. A / DIM. ACCORDANCE TO	VISIVO E DIMENS. / VIS. & DIMENS.
	12/35060	001	CI-12-410	93,00	THRD 1500 RTJ 2" LF2CL1	ASME/ANSI B16.5 -2009	SATISFACTORY

MATERIALE / MATERIAL	C%	Si%	Mn%	S%	P%	Cr%	Ni%	Mo%	Ti%	Cu%	V%	Nb%	N%	Al%	C.E.%
ASTM A350 LF2 CL1/2 (LADLE)	0,200	0,220	0,970	0,010	0,009	0,110	0,050	0,010	0,019	0,120	0,002	0,002	0,010	0,026	0,397

PROVETTA / TEST SPECIMEN SEZ. mm2 SECT. mm2	LUNG. mm LENGHT mm	FORMA SHAPE 1=○ 2=□	SNERVAMENTO YIELD POINT N/mm2 >=0,2%	ROTTURA TENSILE STRENGHT N/mm2 >=	ALLUNGAMENTO ELONGATION %>=	CONTRAZIONE REDUCTION OF AREA %>=	DUREZZA HARDNESS HBW	RESILIENZA / IMPACT TEST - JOULE/cm2 TIPO / TYPE 10x10mm	°C	1	2	3	SNERVAMENTO YIELD POINT N/mm2 >=1,0%	No.Rif. OUR REF.
126,60	50,80	1	368,0	519,0	33,0	64,0	159,0 - 163,0	KV	-46	73	71	70	0,0	

MATERIALE IN ACCORDO A / MATERIAL IN ACC. TO
ASTM/ASME A 350/SA 350 M - 12 ASME CODE SECT. II, PART A, ED. 2010 ADD. 2011a
CSA Z245.12 GRADE 248 CAT.II SOUR SERVICE

TRATTAMENTO TERMICO / HEAT TREATMENT
NORMALIZED AT 930 C - COOLED IN STILL AIR

FORNO / FURNACE
ELECTRIC FURNACE

ORIGINE / ORIGIN OF STEEL
EUROPEAN UNION

COD. COL. / HEAT CODE	COLATA / HEAT	POS. / ITEM	VS.ORDINE / YOUR REFERENCE	Q.TA' / Q.TY	DESCRIZIONE / DESCRIPTION	DIM.IN ACC. A / DIM. ACCORDANCE TO	VISIVO E DIMENS. / VIS. & DIMENS.
	12/34084	046	CI-12-430	100,00	W/N 300 RF 4" STD A105N ⟸	ASME/ANSI B16.5 -2009	SATISFACTORY

MATERIALE / MATERIAL	C%	Si%	Mn%	S%	P%	Cr%	Ni%	Mo%	Ti%	Cu%	V%	Nb%	N%	Al%	C.E.%
ASTM A105 (LADLE)	0,200	0,250	1,020	0,008	0,012	0,090	0,050	0,010	0,018	0,150	0,002	0,002	0,008	0,025	0,404

PROVETTA / TEST SPECIMEN SEZ. mm2 SECT. mm2	LUNG. mm LENGHT mm	FORMA SHAPE 1=○ 2=□	SNERVAMENTO YIELD POINT N/mm2 >=0,2%	ROTTURA TENSILE STRENGHT N/mm2 >=	ALLUNGAMENTO ELONGATION %>=	CONTRAZIONE REDUCTION OF AREA %>=	DUREZZA HARDNESS HBW	RESILIENZA / IMPACT TEST - JOULE/cm2 TIPO / TYPE 10x10mm	°C	1	2	3	SNERVAMENTO YIELD POINT N/mm2 >=1,0%	No.Rif. OUR REF.
126,60	50,80	1	346,0	533,0	30,0	58,0	163,0 - 165,0	KV	20	83	89	85	0,0	

MATERIALE IN ACCORDO A / MATERIAL IN ACC. TO
ASTM/ASME A 105/SA 105 M - 11a ASME CODE SECT. II, PART A, ED. 2010 ADD. 2011a
CSA Z245.12 GRADE 248 CAT.I SOUR SERVICE

TRATTAMENTO TERMICO / HEAT TREATMENT
NORMALIZED AT 920 C - COOLED IN STILL AIR

FORNO / FURNACE
ELECTRIC FURNACE

ORIGINE / ORIGIN OF STEEL
EUROPEAN UNION

NOTE 100% MANUFACTURED IN ITALY
NOTES MANUFACTURING IN ACCORDANCE WITH ORDER AND SPECIFICATION
MATERIAL IN ACCORDANCE WITH NACE MR-0175/2009 ISO 15156-2009 - SOUR SERVICE
MATERIAL IN ACCORDANCE WITH NACE MR-0103/2012 - SOUR SERVICE

UFFICIO CONTROLLO QUALITA' / QUALITY CONTROL DEPARTEMENT	ENTE UFFICIALE DI COLLAUDO / INSPECTION AUTHORITY	MARCHIO PRODUZIONE / MANUFACTURER'S SYMBOL
S. Erigoni		MFF

PO# P6387-5B1098-80 Item# 12
Heat Number: BV069
Trans Am Piping Products Ltd. - Rev'd By: SB
Shipment/Seq #: S 12 - 1969 32

4 X 2 STD/XH BW RED TEE A234-WPB

EDTK Corporation

INSPECTION CERTIFICATE

(EN10204:2004 3.1 / ISO 10474:1991 3.1B)

1499-1,SONG JUNG-DONG,
GANGSEO-GU BUSAN,KOREA
Tel : 82-51-831-6550
Fax : 82-51-831-6886

Customer	Trans Am Piping Products Ltd.	Certificate No.	20120806535	Date	2012/08/29
P.O No.	CI-I2-380	Project Name	EDMONTON		
Job No.		POR/Req'n No.			
Specification for Material	ASTM/ASME A/SA234 WPB(2010Ed.) NACE MR0175/ISO 15156-2:2010Ed.	Starting Material	SEAMLESS PIPE		
Specification for Inspection	ASME B16.9-2007	Dimension and Visual Inspection	GOOD		

Heat Code No [HCN]	No.	Descriptions				Q'ty (Pcs)	Heat Treatment	N.D.E (GOOD)
BU347	0026	45° ELBOW LONG	X-S	B.W	24"	1	HOT FORMED 845°C~945°C N: 910°C	-
BV069	0038	REDUCING TEE	STD / X-S	B.W	4" x 2"	75		MT

CHEMICAL COMPOSITION(%)

Heat Code No [HCN]	Spec.	C	Si	Mn	P	S	Ni	Cr	Mo	Cu	V	C.E	Raw Heat No
	Max.	0.30	0.35	1.06	0.050	0.058	0.40	0.40	0.15	0.40	0.080	0.50	
	Min.	-	0.15	0.29	-	-	-	-	-	-	-	-	
BU347	L	0.17	0.27	0.57	0.013	0.002	0.02	0.06	0.01	0.07	0.015	0.288	811205
BV069	L	0.19	0.25	0.59	0.008	0.004	0.03	0.06	0.02	0.08	0.002	0.312	510498

MECHANICAL PROPERTIES

Heat Code No [HCN]	Spec	Y.S (Ksi)	T.S (Ksi)	E.L (%)		Hardness Test HB	
	Max.	-	95	-		197	
	Min.	35	60	30		-	
BU347	P	42.3	69.3	31.5		141	143
BV069	P	48.3	66.3	42.3		143	145

We hereby certify that the material herein has been made and tested in accordance with the above specification and also with the requirements called for by the above order.

Remark :
- •CSA Z245.11-05 Gr. 241 Cat I Sour Service
- •CRN No. OA9067.2,OA09067.24,OA9067.27,OA9067.20, OA9067.28,OA09067.25,OA9067.29,OA9067.26, OA9067.2T,OA9067.2Y,OA9067.2N.
- •Mn/C:Min.3.0
  - -BU347 : 3.35
  - -BV069 : 3.11
- •Tensile Test specimen Type : Longitudinal

Legend:
HB:Brinell
ST:Solution Treatment
SR:Stress Relieving
N:Normalized
T:Tempered
A:Annealed
Q:Quenched
AC:Air Cool
OC:Oil Cool
WQ:Water Quenched
WC:Water Cool
L:Ladle
P:Product
(G): Hot-Dip Galvanized Coating
Y.S : 0.2% Offset Method

☐Reviewed by :

☐Witnessed by :

Approved by : J. H. Yang

Head of Quality Control Dep't

5BLUE QC DEPT
CHEM SELECT
VERIFIED BY:

METALFAR
PRODOTTI INDUSTRIALI S.P.A.
STAMPAGGIO A CALDO DI ACCIAI COLATI - LEGATI E INOSSIDABILI

SEDE AMMINISTRATIVA E STABILIMENTO:
23861 CESANA BRIANZA (LC) - Italy
Via G. Parini, 29
Tel. +39 031.655441
Fax +39 031.655149
quality.mf@fermar.com

COMPANY WITH QUALITY SYSTEM
CERTIFIED BY DNV
= ISO 9001 =

SALA PROVE E ANALISI MATERIALI / MATERIAL TEST DEPARTMENT

CERTIFICATO DI COLLAUDO SECONDO EN 10204 - 3.1 INSPECTION CERTIFICATE

Certif. N. 49	Del/Dated 03.01.2013	Fattura / Invoice N. 20	Del/Dated 03.01.2013
DDT / Bol. Rello N. 27	Del/Dated 03.01.2013	No.Ord. / Cliente N.	Del/Dated

KING WINFIELD SUPPLY INC
903 35TH Ave
T2E 0K6 NISKU, ALBERTA CA

Dest.: S.P.F. c/o WINFIELD
KING WINFIELD _ (MILL DIRECT - KINGS Supply Ltd.
T2E 0K6 NISKU, ALBERTA CA

COD. COL. / HEAT CODE	COLATA / HEAT	POS. / ITEM	VS.ORDINE / YOUR REFERENCE	Q.TA' / Q.TY	DESCRIZIONE / DESCRIPTION	DIM.IN ACC. A / DIM. ACCORDANCE TO	VISIVO E DIMENS. / VIS. & DIMENS.
12/33489		001	3648/WFF MID	185,00	W/N 300 RF 3" STD A106N	ASME/ANSI B16.5 -2009	SATISFACTORY

MATERIALE / MATERIAL	C%	Si%	Mn%	S%	P%	Cr%	Ni%	Mo%	Ti%	Cu%	V%	Nb%	N%	Al%	C.E.%
ASTM A106 (LADLE)	0,200	0,230	1,000	0,009	0,013	0,160	0,050	0,010	0,016	0,130	0,002	0,001	0,000	0,025	0,401

PROVETTA / TEST SPECIMEN SEZ. mm2 / SECT. mm2	FORMA / SHAPE 1=O 2=□	SNERVAMENTO / YIELD POINT N/mm2 >=205	ROTTURA / TENSILE STRENGHT N/mm2 >=	ALLUNGAMENTO / ELONGATION %	CONTRAZIONE / REDUCTION OF AREA %	DUREZZA / HARDNESS HBW	RESILIENZA / IMPACT TEST - J/cm2				SNERVAMENTO / YIELD POINT N/mm2 >=1,05	CLASSE / CAST REF.
							TEMP / TYPE 10x10mm	°C	1	2		
126,60 69,60	1	343,0	525,0	30,0	69,0	159,0 - 163,0	KV	20	35	39	31	0,0

MATERIALE IN ACCORDO A / MATERIAL IN ACC. TO
ASTM/ASME A 106/SA 106 M - 11 ASME CODE SECT. II, PART A, ED. 2010 ADD. 2011a

TRATTAMENTO TERMICO / HEAT TREATMENT
NORMALIZED AT 920 C - COOLED IN STILL AIR

FORNO / FURNACE
ELECTRIC FURNACE

ORIGINE / ORIGIN OF STEEL
EUROPEAN UNION

COD. COL. / HEAT CODE	COLATA / HEAT	POS. / ITEM	VS.ORDINE / YOUR REFERENCE	Q.TA' / Q.TY	DESCRIZIONE / DESCRIPTION	DIM.IN ACC. A / DIM. ACCORDANCE TO	VISIVO E DIMENS. / VIS. & DIMENS.
12/34021		004	3648/WFF MID	85,00	W/N 300 RF 4" XS A106N	ASME/ANSI B16.5 -2009	SATISFACTORY

MATERIALE / MATERIAL	C%	Si%	Mn%	S%	P%	Cr%	Ni%	Mo%	Ti%	Cu%	V%	Nb%	N%	Al%	C.E.%
ASTM A106 (LADLE)	0,195	0,220	0,940	0,015	0,012	0,130	0,060	0,010	0,008	0,210	0,001	0,001	0,000	0,010	0,395

PROVETTA / TEST SPECIMEN SEZ. mm2 / SECT. mm2	FORMA / SHAPE 1=O 2=□	SNERVAMENTO / YIELD POINT N/mm2 >=205	ROTTURA / TENSILE STRENGHT N/mm2 >=	ALLUNGAMENTO / ELONGATION %	CONTRAZIONE / REDUCTION OF AREA %	DUREZZA / HARDNESS HBW	RESILIENZA / IMPACT TEST - J/cm2				SNERVAMENTO / YIELD POINT N/mm2 >=1,05	CLASSE / CAST REF.
							TEMP / TYPE 10x10mm	°C	1	2		
126,60 59,80	1	340,0	516,0	31,0	69,0	163,0 - 166,0	KV	20	30	30	34	0,0

MATERIALE IN ACCORDO A / MATERIAL IN ACC. TO
ASTM/ASME A 106/SA 106 M - 11 ASME CODE SECT. II, PART A, ED. 2010 ADD. 2011a

TRATTAMENTO TERMICO / HEAT TREATMENT
NORMALIZED AT 920 C - COOLED IN STILL AIR

FORNO / FURNACE
ELECTRIC FURNACE

ORIGINE / ORIGIN OF STEEL
EUROPEAN UNION

NOTE / NOTES
100% MANUFACTURED IN ITALY
MANUFACTURING IN ACCORDANCE WITH ORDER AND SPECIFICATION
MATERIAL IN ACCORDANCE WITH NACE MR-0175/2009 ISO 15156-2009
MATERIAL IN ACCORDANCE WITH NACE MR-0103/2012

UFFICIO CONTROLLO QUALITA' / QUALITY CONTROL DEPARTEMENT	ENTE UFFICIALE DI COLLAUDO / INSPECTION AUTHORITY	MARCHIO PRODUZIONE / MANUFACTURER'S SYMBOL
		MFF

Exhibit 23.7 Receiving Inspection Report

RECEIVING INSPECTION REPORT

DATE: MAY 1 2 2014 PURCHASE ORDER# 5B1109-90

CUSTOMER/OWNER DuSan

DESCRIPTION OF MATERIAL:	PLATE	TUBE /PIPE	BAR	FITTINGS	

		YES	NO
1	MATERIALS CORRECT TO PURCHASE ORDER:	✓	
2	MTR SUPPLIED WITH MATERIALS	✓	
3	MTR CHECKED AGAINST PACKING SLIP	✓	
4	MTR CORRECT FOR THIS MATERIAL	✓	
5	IS MATERIALS IN GOOD CONDITION (NO DAMAGE): ASME SECTION II EDITION 2013	✓	
6	IS MATERIAL THE SAME SIZE AND SCHEDULE AS REQUIRED ON THE PURCHASE ORDER:	✓	
7	IS MATERIAL THE CORRECT GRADE AS REQUIRED ON THE PURCHASE ORDER	✓	
8	IS THE MATERIAL LEGIBLY MARKED FROM THE SUPPLIER? THIS MAY BE STAMPED or STENCILED (record Grade. Type, Heat # And any other relevant information)	✓	

5 Blue Process Equipment Inc. MAY 1 2 2014 Quality Department

NOTE: If any of these inspection steps cannot be completed the inspector shall notify the QS ASAP. The QS shall make out a NCR detailing the discrepancies and the material in question shall be quarantined until a satisfactory solution to the problem can be resolved. This may include rework or sending the material back to the supplier

Inspector : G. CAMERON Signature: Date MAY 1 2 2014

MTR REVIEW
(780)955-2040 E:21

2" CL 150 W/N FLANGE RF XH
BORE A350 - LF2 CL 1

PO# P7947-5B1107-80 Item# 9
Heat Number: 13/745682
Trans Am Piping Products Ltd.
Shipment/Seq #: S13 - 1472
Rev'd By: SB
18

METALFAR
PRODOTTI INDUSTRIALI S.R.L.
STAMPAGGIO A CALDO DI ACCIAI COMUNI - LEGATI E INOSSIDABILI
SEDE AMMINISTRATIVA E STABILIMENTO:
23851 COSSATA BRIANZA (LC) - Italy
Via G. Parini, 28
Tel. +39 031.855441
Fax +39 031.855149
quality.mf@tiscali.it

COMPANY WITH QUALITY SYSTEM
CERTIFIED BY DNV = ISO 9001 =

SALA PROVE E ANALISI MATERIALI / MATERIAL TEST DEPARTMENT

CERTIFICATO DI COLLAUDO SECONDO EN 10204 - 3.1 INSPECTION CERTIFICATE

Certif. N. 3810	Del/Dated 04.07.2013	Fattura / Invoice N. 2594	Del/Dated 02.07.2013
DDT / Bol Note N. 3022	Del/Dated 02.07.2013	No.Ord. / Our ref. N. 0	Del/Dated

TRANS AM PIPING PRODUCTS LTD 9935 ENDEAVOR DRIVE S.E. T3S 0A1 CALGARY, ALBERTA CA	Dest.: TRANS AM PIPING PRODUCTS LTD 9935 - Endeavor Drive S.E. T3S OA1 Calgary, ALBERTA CA

COD. COL. HEAT CODE	COLATA HEAT	POS. ITEM	VS.ORDINE YOUR REFERENCE	Q.TA' Q.TY	DESCRIZIONE DESCRIPTION	DIM.IN ACC. A DIM. ACCORDANCE TO	VISIVO E DIMENS. VIS. & DIMENS.
	13/74562	006	CI-12-311	729,00	W/N 150 RF 2" XS LF2CL1 ⟸	ASME/ANSI B16.5 -2009	SATISFACTORY

MATERIALE / MATERIAL	C%	Si%	Mn%	S%	P%	Cr%	Ni%	Mo%	Ti%	Cu%	V%	Nb%	N%	Al%	C.E.%
ASTM A350 LF2 CL1/2 (LADLE)	0,190	0,200	1,010	0,010	0,015	0,140	0,060	0,010	0,019	0,170	0,004	0,002	0,009	0,026	0,404

PROVETTA / TEST SPECIMEN SEZ. mm2 SECT. mm2	LUNG. mm LENGHT mm	FORMA SHAPE 1=⊙ 2=□	SNERVAMENTO YIELD POINT N/mm2 >=0,2%	ROTTURA TENSILE STRENGHT N/mm2 >=	ALLUNGAMENTO ELONGATION %>=	CONTRAZIONE REDUCTION OF AREA %>=	DUREZZA HARDNESS HBW	RESILIENZA / IMPACT TEST - JOULE/cm2 TIPO / TYPE 10x10mm	C	1	2	3	SNERVAMENTO YIELD POINT N/mm2 >=1,0%	No.Fil. OUR REF.
126,60	50,80	1	337,0	536,0	33,0	568,0	164,0 - 166,0	KV	-46	72	66	73	0,0	

MATERIALE IN ACCORDO A / MATERIAL IN ACC. TO
ASTM/ASME A 350/SA 350 M - 12 ASME CODE SECT. II, PART A, ED. 2010 ADD. 2011a
CSA Z245.12 GRADE 248 CAT.II SOUR SERVICE

TRATTAMENTO TERMICO / HEAT TREATMENT
NORMALIZED AT 930 C - COOLED IN STILL AIR

FORNO / FURNACE
ELECTRIC FURNACE

ORIGINE / ORIGIN OF STEEL
EUROPEAN UNION

COD. COL. HEAT CODE	COLATA HEAT	POS. ITEM	VS.ORDINE YOUR REFERENCE	Q.TA' Q.TY	DESCRIZIONE DESCRIPTION	DIM.IN ACC. A DIM. ACCORDANCE TO	VISIVO E DIMENS. VIS. & DIMENS.
	13/35755	059	CI-12-430	73,00	W/N 300 RF 6" XS A105N	ASME/ANSI B16.5 -2009	SATISFACTORY

MATERIALE / MATERIAL	C%	Si%	Mn%	S%	P%	Cr%	Ni%	Mo%	Ti%	Cu%	V%	Nb%	N%	Al%	C.E.%
ASTM A105 (LADLE)	0,200	0,210	0,970	0,009	0,008	0,060	0,060	0,010	0,016	0,130	0,001	0,002	0,009	0,027	0,393

PROVETTA / TEST SPECIMEN SEZ. mm2 SECT. mm2	LUNG. mm LENGHT mm	FORMA SHAPE 1=⊙ 2=□	SNERVAMENTO YIELD POINT N/mm2 >=0,2%	ROTTURA TENSILE STRENGHT N/mm2 >=	ALLUNGAMENTO ELONGATION %>=	CONTRAZIONE REDUCTION OF AREA %>=	DUREZZA HARDNESS HBW	RESILIENZA / IMPACT TEST - JOULE/cm2 TIPO / TYPE 10x10mm	C	1	2	3	SNERVAMENTO YIELD POINT N/mm2 >=1,0%	No.Fil. OUR REF.
126,60	50,80	1	342,0	516,0	32,0	60,0	156,0 - 159,0	KV	20	80	82	86	0,0	

MATERIALE IN ACCORDO A / MATERIAL IN ACC. TO
ASTM/ASME A 105/SA 105 M - 11a ASME CODE SECT. II, PART A, ED. 2010 ADD. 2011a
CSA Z245.12 GRADE 248 CAT.I SOUR SERVICE

TRATTAMENTO TERMICO / HEAT TREATMENT
NORMALIZED AT 920 C - COOLED IN STILL AIR

FORNO / FURNACE
ELECTRIC FURNACE

ORIGINE / ORIGIN OF STEEL
EUROPEAN UNION

NOTE 100% MANUFACTURED IN ITALY
NOTES MANUFACTURING IN ACCORDANCE WITH ORDER AND SPECIFICATION
MATERIAL IN ACCORDANCE WITH NACE MR-0175/2009 ISO 15156-2009 - SOUR SERVICE
MATERIAL IN ACCORDANCE WITH NACE MR-0103/2012 - SOUR SERVICE

UFFICIO CONTROLLO QUALITA' QUALITY CONTROL DEPARTEMENT	ENTE UFFICIALE DI COLLAUDO INSPECTION AUTHORITY	MARCHIO PRODUZIONE MANUFACTURER'S SYMBOL
S. Erigoni		

4" STD SEAMLESS STEEL PIPE
A106 GR B B.E. (S.R.L.)

PO# P6675-5B1087-80 Item# 64
Heat Number: 420958
Trans Am Piping Products Ltd. - Rev'd By: SB
Shipment/Seq #: S13 - 1077

ADD:JINTANG ROAD DONGLI
DISTRICT,TIANJIN,CHINA
TEL:86-22-24801139
FAX:86-22-24801291

TIANJIN PIPE(GROUP)CORPORATION
QUALITY CERTIFICATE
(EN10204 3.1)

Licence No.:

No.: C12927371264

1	Contract No.	2012SSG-EI-12-517	L/C No.		O.D.×W.T.	4"STD(114.3x 6.02mm)	Packing	IN LOOSE
	Order	Trans Am Piping Products Ltd.,	Product	Seamless Steel Line Pipe	Steel grade	Cat Ⅰ Gr.290SS/X42/Gr.B	Total pieces	
	P.O.No.	EI-12-517	Port of desti.		Man. Method	HOT ROLLING SEAMLESS	Total metres	
	Standard	CSA Z245.1-07/API 5L PSL1-2007/ASTM/ASME A/SA 106-2011			Length range	SRL	Total weight	

2	Heat No.	Lot No.	Quantity				Delivery condition	Sample No.	Tensile test(Mpa)							Impact test(J)										
			Pieces	Meters	Bundles	Tons			1*	Tem. ℃	T.S.	Type	Y.S.	Elong. %	Shrink %	2*	Tem. ℃	Size	AK1	shear %	AK2	shear %	AK3	shear %	AVE	shear %
	420958	130					Hot rolling	130-12-2184	A	23	550	Rt0.5	407	31.5												
	Total							Note:	A:strip,L,bo=25.4mm,Lo=50mm																	

3	Heat No.	Lot No.	Sample No.	Hardness Brinnel	Hardness Brinnel(HB)(inside)					Hardness Brinnel(HB)(middle)					Hardness Brinnel(HB)(outside)					NDE	Fla. test(1)	Fla. test(2)
					1	2	3	4	AVE	1	2	3	4	AVE	1	2	3	4	AVE			
	420958	130	130-12-2184		155	154	156	155	155	155	156	155	154	155	155	154	155	154	155	EMI/L4	G	G

4	Heat No.	Chemical composition%(L:Ladle analysis P:Product analysis)																				Hydro.Test (Mpa/s)
	Steel speci.		C	Si	Mn	P	S	Ni	Cr	Mo	Cu	Al	V	Nb	Ti	B	Ca	N	H	O	CE(CSA)	CE(IIW)	
	420958	L	0.17	0.34	1.14	0.016	0.007	0.03	0.05	0.01	0.04	0.020	0.06	0.001	0.001	0.0004	0.0002				0.39	0.39	15.5/8
	Q345B	P	0.17	0.33	1.14	0.017	0.007	0.03	0.04	0.01	0.04	0.020	0.05	0.001	0.001	0.0004	0.0003				0.39	0.38	
		P	0.17	0.33	1.14	0.017	0.007	0.03	0.04	0.01	0.04	0.020	0.05	0.001	0.001	0.0004	0.0003				0.39	0.38	
		L																					
		P																					
		P																					
		L																					
		P																					
		P																					

5	NDE(100%)	Visual and dimension	Hydro.Test	Pipe end NDE	Pipe end bevelling	Residual mag. Test	SSCC	HIC
	G	G	G	G	G	G		

We hereby state that all pipes are manufactured and inspected according to above standards and orders.

Seal for Certification

TIANJIN PIPE(GROUP) CORPORATION QUALITY CERTIFICATE TPCO AO7

Note: 1.NACE MR 0175-2009/ISO 15156-2:2009; 2.CE(CSA)=C+Fx{Mn/6+Si/24+Cu/15+Ni/20+(Cr+Mo+V+Nb)/5+5B}
CE II W=C+Mn/6+(Cr+Mo+V)/5+(Cu+Ni)/15; 3.The pipe is produced from "fully killed" steel; 4.Silicon and calcium treated for inclusion morphology control in Steel Melting; Billet produced by TPCO

No.	C12927371264	Date	
Page	(1)	2012-12-31	

Remark:desti.=destination;tem.=temperature;speci.=specification;Man.=Manufacture;Fla.=Flattening;G=Good;Hydro.=Hydrostatic;Mag.=Magnetic

PO# P7788-5B1107-80 Item# 16
Heat Number: 12K20096
Trans Am piping products Ltd. - Rev'd By: SB
Shipment/Seq #: S12 - 1898 56

16X12 STD BW CONC REDUCER
A234-WPB

Purchaser : TRANS-AM PIPING PRODUCTS LTD.

INSPECTION CERTIFICATE

TO EN10204 3.1

Thai Benkan Co., Ltd.
58 Soi Watkrunai, Bangkru,,Prapadaeng,
Samutprakarn, 10130 Thailand.

E-No.	Purchase Order No.	Job No.	D M Y Certificate No.
MC-760	CI-12-235 C/O: 1		25/10/2012 T- 20121180221

No.		MFG. No.	Specification for Material Made from Seamless Pipe	Specification for Inspection		Visual Examination	Dimensional Inspectio
			ASTM A234-11/ASME SA234-10 Gr.WPB	ASME B16.9-2007,B16.25-2007		Good	Good
			Product & Size (1*1)	Quantity	Heat Treatment (Note 1)	Hardness Actual Data	
1		12K00093	90 EL WPB 1 1/2 S40	300	A	HB : 125 - 140	
2		12E00005	90 EL WPB [illegible] S40	21/1,500	A	120 - 150	
3		12E00031	45 EL WPB [illegible] S40	8/200	A	18 - 145	
4		12G20091	RC WPB [illegible] STD	5/15	N	HB : 130 - 145	
5		12K20096	RC WPB 16 X 12 STD	5/154	N	HB : 130 - 145	

Specification		Chemical Composition %												Tension Test *2			
		C	Si	Mn	P	S	Cu	Ni	Cr	Mo	V	Nb	C.E.	YS	TS	E	
Min.		x 100	100	x 100	1000	1000	100	x 100	100	x 100	x 1000	x 1000	x 100	MPa.			HARDNESS MAX
Max.			10	29										240	415	30	197 HB : GOOD
Material Heat No.		30		106	30	58	20	40	40	15	60	20			655		
1	3-89731	19	25	86	19	2	<1	1	2	<1	1	<1	34	345	492	48	
2	973132	16	19	77	13	5	14	11	20	5	0	0	36	346	520	30	
3	J1L4C76	18	19	84	11	6	3	2	5	2	0	0	34	319	496	39	
4	J2L5476	19	19	84	17	7	1	2	6	2	0	0	35	317	472	41	
5	J2L5476	19	19	84	17	7	1	2	6	2	0	0	35	317	472	41	

ORIGINAL

(Note 1) A : Hot formed with final temperature between 620 °C-980°C, Air Cooling N : Normalizing 910°Cx0.5 HR. Air Cooling *N : Normalizing 910°Cx0.5 HR. Air Cooling (Specification for material made from plate) S : Stress Relieving 675° Cx0.5 HR. Air Cooli
Note for WPB:For each reduction of 0.10% below the specified carbon maximum,an increase of 0.05% manganese above the specified maximum will be permitted up to a maximum of 1.35%

The fittings was manufactured,sampled,tested,and inspected in accordance with the specification,and was found to meet the requirements.

C.E. = C+Mn/6+(Cr+Mo+V)/5+(Ni+Cu)/15 MAGNETIC PARTICLE EXAMINATION FOR TEE ONLY :

We hereby certify that the product described herein has been manufactured in accordance with the specifications concerned and also with the purchaser's requirements and that the test results shown herein are correct.

Rungnapa Kambiranon
Quality Assurance Manager
Thai Benkan Co., Ltd.

* 1 : "T" symbolized wall thickness in mm. * 2 : YS Yield strength TS = Tensile strength E = Elongation

Form TZ-6A/3

PO# P6535-5B1093-21 Item# 3
Heat Number: 323903
Trans Am Piping Products Ltd. - Rev'd By: SB
Shipment/Seq #: S 12 - 2010 3

12" SCH 40 (.406) SMLS PIPE
A106 GR B B.E. (S.R.L.)

TPCO

ADD:JINTANG ROAD DONGLI
DISTRICT,TIANJIN,CHINA
TEL:86-22-24801139
FAX:86-22-24801291

TIANJIN PIPE(GROUP)CORPORATION
QUALITY CERTIFICATE
(EN10204 3.1)

Licence No.:

No.: C12901131237

1	Contract No.	2012SSG-CI-12-518	L/C No.		O.D.×W.T.	12"40(323.9x 10.31mm)	Packing	IN LOOSE
	Order	Trans Am Piping Products Ltd.,	Product	Seamless Steel Line Pipe	Steel grade	Cat I Gr.290SS/X42/Gr.B	Total pieces	
	P.O.No.	CI-12-518	Port of desti.		Man. Method	HOT ROLLING SEAMLESS	Total metres	
	Standard	CSA Z245.1-07/API 5L PSL1-2007/ASTM/ASME A/SA 106-2011			Length range	SRL	Total weight	

	Heat No.	Lot No.	Quantity: Pieces	Quantity: Meters	Quantity: Bundles	Quantity: Tons	Delivery condition	Sample No.	Tensile test(Mpa): 1*	Tem. ℃	T.S.	Type	Y.S.	Elong. %	Shrink %	Impact test(J): 2*	Tem. ℃	Size	AK1	shear %	AK2	shear %	AK3	shear %	AVE	shear %
2	323903	130					Hot rolling	130-11-394	A	23	566	Rt0.5	411	30.5												
	Total							Note:	A:strip,L,bo=38.1mm,Lo=50mm																	

	Heat No.	Lot No.	Sample No.	Hardness Brinnel	Hardness Brinnel(HB)(inside): 1	2	3	4	AVE	Hardness Brinnel(HB)(middle): 1	2	3	4	AVE	Hardness Brinnel(HB)(outside): 1	2	3	4	AVE	NDE	Fla. test(1)	Fla. test(2)
3	323903	130	130-11-394		160	161	162	161	161	160	161	161	159	160	162	161	162	160	161	EMI/L4	G	G

	Heat No.		Chemical composition%(L:Ladle analysis P:Product analysis): C	Si	Mn	P	S	Ni	Cr	Mo	Cu	Al	V	Nb	Ti	B	Ca	N	H	O	CE(CSA)	CE(IIW)	Hydro.Test (Mpa/s)
4	Steel speci.																						
	323903	L	0.17	0.34	1.13	0.013	0.006	0.04	0.05	0.01	0.06	0.031	0.06	0.001	0.001	0.0003	0.0001				0.39	0.39	9.4/8
	Q345B	P	0.17	0.34	1.12	0.012	0.005	0.04	0.05	0.02	0.06	0.030	0.05	0.001	0.001	0.0002	0.0001				0.39	0.39	
		P	0.17	0.34	1.12	0.012	0.005	0.04	0.05	0.02	0.06	0.030	0.05	0.001	0.001	0.0002	0.0001				0.39	0.39	
		L																					
		P																					
		P																					
		L																					
		P																					
		P																					

5	NDE(100%)	Visual and dimension	Hydro.Test	Pipe end NDE	Pipe end bevelling	Residual mag. Test	SSCC	HIC
	G	G	G	G	G	G		

We hereby state that all pipes are manufactured and inspected according to above standards and order.

Seal from certification

Note:	1.NACE MR 0175-2009/ISO 15156-2:2009; 2.CE(CSA)=C+Fx{Mn/6+Si/24+Cu/15+Ni/20+(Cr+Mo+V+Nb)/5+5B} CE II W=C+Mn/6+(Cr+Mo+V)/5+(Cu+Ni)/15; 3.The pipe is produced from "fully killed" steel; 4.Silicon and calcium treated for inclusion morphology control in Steel Melting; Billet produced by TPCO	No. C12901131237	Date
		Page (1)	2012-11-5

Remark:desti.=destination;tem.=temperature;speci.=specification;Man.=Manufacture;Fla.=Flattening;G=Good;Hydro.=Hydrostatic;Mag.=Magnetic

PO# P6675-5B1087-80 Item# 68
Heat Number: 825822
Trans Am Piping Products Ltd. - Rev'd By: JES
Shipment/Seq #: 1 12 12 14

16" STD SEAMLESS STEEL PIPE
A106 GR B B.E. (S.R.L.)

ADD:JINTANG ROAD DONGLI
DISTRICT,TIANJIN,CHINA
TEL:86-22-24801139
FAX:86-22-24801291

TIANJIN PIPE(GROUP)CORPORATION LTD.
TEST CERTIFICATE
(EN10204 3.1)

L/C No.:
No.: C12840425846

Contract No.	2012SSG-CI-12-330	Product	PIPE	O.D.×W.T.	16"STD(406.4x9.53mm)	Packing	IN LOOSE
Order	Trans Am Piping Products Ltd.,	DIMENSION STANDARD	ASME B36.10	Manu Method	HOT ROLLING SEAMLESS	Total pieces	20
1 P.O.No.	CI-12-330					Total metres	
Material Standard	ASTM A 106-B-08, ASME SA 106-B-08, API 5L X42 PSL1 -07, CSA Z245.1-07 Gr.290 Cat I, NACE MR0175-09/ISO 15156			Length range	DRL	Total weight	22.861MT

Heat No.	Lot No.	Quantity Pieces	Meters	Bundles	Tons	Delivery condition	Sample No.	Tensile test(Mpa) 1"	Tem. ℃	T.S.	Type	Y.S.	Elong. %	Shink %	2" ..	Tem. ℃	Size	Impact test(J) AK1	share %	AK2	share %	AK3	share %	AVE	share %
825822	130	20			22.861	Hot rolling	130-6-2649	A		570		417	39												
2																									
Total		20			22.861		Note:	A:strip,L,bo=38.1,Lo=50																	

Heat No.	Lot No.	Sample No.	Hardness Brinnel	Hardness Brinnel(HB)(inside) 1	2	3	4	AVE	Hardness Brinnel(HB)(middle) 1	2	3	4	AVE	Hardness Brinnel(HB)(outside) 1	2	3	4	AVE	NDE	Fla. test(1)	Fla. test(2)
825822	130	130-6-2649		166	165	165	166	166	165	165	164	166	165	166	165	166	165	166	EMI,L4	G	G
3																					

Heat No. / Steel speci.		Chemical composition%(L:Ladle analysis P:Product analysis) C	Si	Mn	P	S	Ni	Cr	Mo	Cu	V	B	Ti	Nb	CE	CE(CSA)	Hydro.Test (Psi/s)
825822	L	0.17	0.34	1.11	0.014	0.007	0.04	0.07	0.01	0.04	0.06	0	0.001	0.001	0.39	0.39	1000/5
20	P	0.17	0.33	1.11	0.015	0.006	0.04	0.07	0.01	0.05	0.06	0	0.001	0.001	0.39	0.39	
	P	0.17	0.33	1.11	0.015	0.006	0.04	0.07	0.01	0.05	0.06	0	0.001	0.001	0.39	0.39	
4	L																
	P																
	P																
	L																
	P																
	P																

5	NDE(100%)	Visual and dimension	Hydro.Test	Pipe end NDE	Pipe end bevelling	Residual mag Test	SSCC	HIC
	G	G	G		G			

We hereby state that all pipes are manufactured and inspected according to above standards and order.

No.
Page (1)
Date 2012-6-27

Note: CE(CSA)=C+Fx{Mn/6+Si/24+Cu/15+Ni/20+(Cr+Mo+V+Nb)/5+5B} CE=C+Mn/6+(Cr+Mo+V)/5+(Cu+Ni)/15

Remark:desti.=destination;tem.=temperature;steel speci.=steel specification;desti.=destination;Manu.=Manufacture;G=Good

PO# P7988-5B1107-80 Item# 4
Heat Number: 58892
Trans Am Piping Products Ltd. - Rev'd By: SB
Shipment/Seq #: S 13 - 1213 26

4X8-10 STD FS B/W PIPET A105N

INTERNATIONAL WFI NUCLEAR PRODUCTS
Manufacturer of Piping and Pressure Vessel Components
4404 Haygood St - Houston, TX 77022
Phone: 713-695-3633 Fax: 713-695-3528
A Bonney Forge Company

Sold To: TRANS AM PIPING PRODUCTS
LTD
9335 ENDEAVOR DRIVE S.E.
CALGARY AB T3S 0A1

MTR #: 249,948

PO #: CI-13-240

Sales Order #: C001304104 Date: 03/22/2013

This product has not come in direct contact with mercury or any of its compounds, nor with any mercury-containing device employing a single boundary of containment. No welding performed.
We certify that the contents of this report are correct and accurate, and that all test results and operations performed by WFI or its subcontractors are in compliance with the material specification and requirements of the referenced code or standard, and that the material conforms to the dimensional requirements of the order. This document is in accordance with EN10204 3.1.

Certified Material Test Report

Heat Code: 58892

Material: A/SA105N 09

Item	Quantity	Description
27	25	10 - 8 X 4 STD BWP A/SA105N
28	15	20 - 12 X 4 STD BWP A/SA105N

Chemical Composition

Ladle	C	CR	CU	MN	MO	NB	NI	P
	0.207	0.03	0.070	1.00	0.005	0.015	0.02	0.010
	S	SX	V					
	0.018	0.21	0.005					

Carbon Equivalency: Ladle 0.39

	Tensile PSI	Yield PSI	Elong %	RA %	Hardness	
Product	72,332	48,130	35.80	62.80	130 BHN	130 BHN

Normalized

IAW NACE MR0175/ ISO 15156- 2009

Marie Dehmer
Quality Assurance Representative

ASME SECTION II
EDITION 2013

Blue Process Equipment Inc.
MAY 12 2014
Quality Department

PO# P6675-5B1087-00 Item# 67
Heat Number: 104012
Trans Am Piping Products Ltd. - Rev'd By: SB
Shipment/Seq #: S12 - 1666

12" STD SEAMLESS STEEL PIPE
A333 GR 6 B.E.(S.A.L.)

ADD:JINTANG ROAD,DONGLI
DISTRICT,TIANJIN,CHINA
TEL:86-22-24801139
FAX:86-22-24801291

TIANJIN PIPE(GROUP)CORPORATION
QUALITY CERTIFICATE
(EN10204 3.1)

Licence No.:
No.: C12489428213

Contract No.	2012SSG-CI-12-330	L/C No.		O.D.xW.T.	12"STD(323.9x 9.53mm)	Packing	IN LOOSE
Order	Trans Am Piping Products Ltd.,	Product	Seamless Steel Line Pipe	Steel grade	Gr. 6	Total pieces	
P.O.No.	CI-12-330	destL		Man. Method	HOT ROLLING SEAMLESS	Total metres	
Standard	ASTM/ASME A/SA 333-2011			Length range	SRL	Total weight	

	Heat No.	Lot No.	Quantity				Delivery condition	Sample No.	Tensile test(Mpa)							Impact test(J)									
			Pieces	Meters	Bundles	Tons			1"	Tem. ℃	T.S.	Type	Y.S.	Elong. %	Shrink %	2"	Tem. ℃	Size	AK1	shear %	AK2	shear %	AK3	shear %	AVE	shear %
2	104012	130					Normalized	130-S-2144	A	23	515	Rt0.5	375	37.5		A	-46℃	10X7.5	46		42		49		46	
	Total							Note:	Astrip,L,bo=38.1mm,Lo=50mm							A:V/L,B:V/T									

	Heat No.	Lot No.	Sample No.	Hardness: Brinnel	Hardness Brinnel(HB)(inside)					Hardness Brinnel(HB)(middle)					Hardness Brinnel(HB)(outside)					NDE	Fla. test(1)	Fla. test(2)
					1	2	3	4	AVE	1	2	3	4	AVE	1	2	3	4	AVE			
3	104012	130	130-S-2144		164	165	164	164	164	165	164	165	165	165	165	164	165	165	165	EMI/L4	G	G

	Heat No.		Chemical composition%(L:Ladle analysis P:Product analysis)																		Hydro.Test (Psi/s)
	Steel specL		C	Si	Mn	P	S	Ni	Cr	Mo	Cu	V	B	Ti	Nb	Ca					CE(IIW)		
4	104012	L	0.16	0.34	1.29	0.017	0.004	0.02	0.02	0.01	0.01	0.01	0	0	0	0.0001					0.39		1240/5
	A333 GR 6	P	0.16	0.35	1.29	0.016	0.004	0.02	0.02	0.02	0.01	0.01	0	0	0	0.0001					0.39		
		P	0.16	0.35	1.29	0.016	0.004	0.02	0.02	0.02	0.01	0.01	0	0	0	0.0001					0.39		
		L																					
		P																					
		P																					
		L																					
		P																					
		P																					

5	NDE(100%)	Visual and dimension	Hydro.Test	Pipe end NDE	Pipe end bevelling	Residual mag. Test	SSCC	HIC
	G	G	G	G	G	G		

We hereby state that all pipes are manufactured and inspected according to above standards and orde

Note: 1.NACE MR 0175-2009/ISO 15156-2:2009; 2.CE IIW=C+Mn/6+(Cr+Mo+V)/5+(Cu+Ni)/15; 3.The pipe is produced from "fully killed" steel; 4.Silicon and calcium treated for inclusion morphology control in Steel Melting; Billet produced by TPCO; 5. Heat Treatment Condition For Pipe Normalized:900℃ X 10MIN;

No.	C12489428213	Date	
Page	(1)	2012-5-29	

Remark:desti.=destination;tem.=temperature;speci.=specification;Man.=Manufacture;Fla.=Flattening;G=Good;Hydro.=Hydrostatic;Mag.=Magnetic

5Blue
Process Equipment Inc.

RECEIVING INSPECTION REPORT

DATE: OCT 2 8 2013 **PURCHASE ORDER#** 1108-80

CUSTOMER/OWNER_____

DESCRIPTION OF MATERIAL:	PLATE	TUBE /PIPE	BAR	FITTINGS	

		YES	NO
1	MATERIALS CORRECT TO PURCHASE ORDER:	✓	
2	MTR SUPPLIED WITH MATERIALS	✓	
3	MTR CHECKED AGAINST PACKING SLIP	✓	
4	MTR CORRECT FOR THIS MATERIAL	✓	
5	IS MATERIALS IN GOOD CONDITION (NO DAMAGE):	✓	
6	IS MATERIAL THE SAME SIZE AND SCHEDULE AS REQUIRED ON THE PURCHASE ORDER:	✓	
7	IS MATERIAL THE CORRECT GRADE AS REQUIRED ON THE PURCHASE ORDER	✓	
8	IS THE MATERIAL LEGIBLY MARKED FROM THE SUPPLIER? THIS MAY BE STAMPED or STENCILED (record Grade. Type, Heat # And any other relevant information)	✓	

NOTE: If any of these inspection steps cannot be completed the inspector shall notify the QS ASAP. The QS shall make out a NCR detailing the discrepancies and the material in question shall be quarantined until a satisfactory solution to the problem can be resolved. This may include rework or sending the material back to the supplier

Inspector :_____ **Signature:** _____ **Date** OCT 2 8 2013

ROSEMARY KUNTZ
SAFETY / MTR
(780) 955-2040E:226

Trans Am

PIPING PRODUCTS LTD.

Shipped Date
Oct 24, 2013

Page 1 of 1

Sold To
Blue Process Equipment Inc.
2303 - 8 Street
Nisku, Ab

T9E 7Z3
Ordered By Tara

Ship To

Ph# 780 955-2040

Customer P.O.#	Job# / Tag#	T/A Sales Order #
P8049-5B1108-80		E13 - 43897

Shipping Instructions	Freight	Date Ordered
DELIVERY THURSDAY AM TRUCK		Oct 23, 2013

Item	Description	Qty.Ord.	Um	Qty.Ship.	Backorder	Heat #	Mnf
1	1-1/2" XH SEAMLESS CS PIPE A106 GR B PE - SRL	40	FT	43.28		11109306	HV
2	4" CL 300 BLIND FLANGE RF A105N D/T 1/2 D/T 1/2 NPT ON CENTER	2	EA	2		12/35006	MFF
3	1" CL 3000 FS SCRD UNION A105N	20	EA	20		05U	IML

Total MTR's Listed 3

Manufacturer's Legend & Alberta CRN #

HV Hengyang Valin Steel Tube

IML Industria Meccanica Ligure SpA
OA9221.52 Exp. Feb 2014

MFF Metalfar SpA
OB11962.2 Exp. Feb 2022

Blue Process Equipment Inc. OCT 28 2013 Quality Department

RECEIVED OCT 25 2013

Weight Shipped	Skid	Crate	Sack	Box	Loose	Loose Pipe	Pipe Bundle	Misc.	Trans Am Representative
242 Lbs.				2		2			Matthew (Moe) O'Donnell

is a Registered Trademark of
Trans Am Piping Products Ltd.

Packing List / MTR Summary

1711 - 66th. Avenue, Edmonton, Alberta T6P 1Y9
Ph# (780) 440-4567 Fax# (780) 440-1488

PO# P8049-5B1108-80 Item# 2
Heat Number: 12/35006 - Rev'd By: APS
Trans Am Piping Products Ltd. - 4" CL 300 BLIND FLANGE RF
P.O./Seq #: EL-13 - 10830 - 1 A105N D/T 1/2 NPT ON CENTER

METALFAR
PRODOTTI INDUSTRIALI S.P.A.
STAMPAGGIO A CALDO DI ACCIAI COMUNI - LEGATI E INOSSIDABILI

SEDE AMMINISTRATIVA E STABILIMENTO:
23861 CESANA BRIANZA (LC) - Italy
Via G. Parini, 28
Tel. +39 031.655441
Fax +39 031.655149
quality.mff@farmas.com

COMPANY WITH QUALITY SYSTEM
CERTIFIED BY DNV = ISO 9001 =

SALA PROVE E ANALISI MATERIALI / MATERIAL TEST DEPARTMENT

CERTIFICATO DI COLLAUDO SECONDO EN 10204 - 3.1 INSPECTION CERTIFICATE

Certif. N. 2759	Del/Dated 14.05.2013	Fattura / Invoice N. 1812	Del/Dated 09.05.2013
DDT / Del Note N. 2076	Del/Dated 09.05.2013	Ns.Ord. / Our ref. N.	Del/Dated

TRANS AM PIPING PRODUCTS LTD	Dest.: TRANS AM PIPING PRODUCTS LTD
9335 ENDEAVOR DRIVE S.E.	9335 - Endeavor Drive S.E.
T3S 0A1 CALGARY, ALBERTA CA	T3S OA1 Calgary, ALBERTA CA

COD. COL. / HEAT CODE	COLATA / HEAT	POS. / ITEM	VS.ORDINE / YOUR REFERENCE	Q.TA' / Q.TY	DESCRIZIONE / DESCRIPTION	DIM.IN ACC. A / DIM. ACCORDANCE TO	VISIVO E DIMENS. / VIS. & DIMENS.
	12/34105	067	CI-12-430	50,00	W/N 300 RF 4" 160 A105N	ASME/ANSI B16.5 -2009	SATISFACTORY

MATERIALE / MATERIAL	C%	Si%	Mn%	S%	P%	Cr%	Ni%	Mo%	Ti%	Cu%	V%	Nb%	N%	Al%	C.E.%
ASTM A105 (LADLE)	0,205	0,230	0,970	0,015	0,015	0,140	0,060	0,020	0,010	0,150	0,002	0,002	0,000	0,010	0,413

PROVETTA / TEST SPECIMEN SEZ. mm2 / SECT. mm2	LUNG. mm / LENGHT mm	FORMA / SHAPE 1=O 2=□	SNERVAMENTO / YIELD POINT N/mm2 >=0,2%	ROTTURA / TENSILE STRENGHT N/mm2 >=	ALLUNGAMENTO / ELONGATION %>=	CONTRAZIONE / REDUCTION OF AREA %>=	DUREZZA / HARDNESS HBW	RESILIENZA / IMPACT TEST - JOULE/cm2 TIPO / TYPE 10x10mm	°C	1	2	3	SNERVAMENTO / YIELD POINT N/mm2 >=1,0%	Ns.Rif. / OUR REF.
126,60	50,80	1	346,0	524,0	30,0	59,0	156,0 - 159,0	KV	20	84	88	82	0,0	

MATERIALE IN ACCORDO A / MATERIAL IN ACC. TO
ASTM/ASME A 105/SA 105 M - 11a ASME CODE SECT. II, PART A, ED. 2010 ADD. 2011a
CSA Z245.12 GRADE 248 CAT.I SOUR SERVICE

TRATTAMENTO TERMICO / HEAT TREATMENT
NORMALIZED AT 920 C - COOLED IN STILL AIR

FORNO / FURNACE
ELECTRIC FURNACE

ORIGINE / ORIGIN OF STEEL
EUROPEAN UNION

COD. COL. / HEAT CODE	COLATA / HEAT	POS. / ITEM	VS.ORDINE / YOUR REFERENCE	Q.TA' / Q.TY	DESCRIZIONE / DESCRIPTION	DIM.IN ACC. A / DIM. ACCORDANCE TO	VISIVO E DIMENS. / VIS. & DIMENS.
	12/35006	110	CI-12-430	59,00	BLIND 300 RF 4" A105N	ASME/ANSI B16.5 -2009	SATISFACTORY

MATERIALE / MATERIAL	C%	Si%	Mn%	S%	P%	Cr%	Ni%	Mo%	Ti%	Cu%	V%	Nb%	N%	Al%	C.E.%
ASTM A105 (LADLE)	0,190	0,230	0,970	0,010	0,009	0,110	0,050	0,010	0,019	0,160	0,002	0,003	0,010	0,025	0,390

PROVETTA / TEST SPECIMEN SEZ. mm2 / SECT. mm2	LUNG. mm / LENGHT mm	FORMA / SHAPE 1=O 2=□	SNERVAMENTO / YIELD POINT N/mm2 >=0,2%	ROTTURA / TENSILE STRENGHT N/mm2 >=	ALLUNGAMENTO / ELONGATION %>=	CONTRAZIONE / REDUCTION OF AREA %>=	DUREZZA / HARDNESS HBW	RESILIENZA / IMPACT TEST - JOULE/cm2 TIPO / TYPE 10x10mm	°C	1	2	3	SNERVAMENTO / YIELD POINT N/mm2 >=1,0%	Ns.Rif. / OUR REF.
126,60	50,80	1	333,0	513,0	31,0	59,0	156,0 - 159,0	KV	20	81	83	80	0,0	

MATERIALE IN ACCORDO A / MATERIAL IN ACC. TO
ASTM/ASME A 105/SA 105 M - 11a ASME CODE SECT. II, PART A, ED. 2010 ADD. 2011a
CSA Z245.12 GRADE 248 CAT.I SOUR SERVICE

TRATTAMENTO TERMICO / HEAT TREATMENT
NORMALIZED AT 920 C - COOLED IN STILL AIR

FORNO / FURNACE
ELECTRIC FURNACE

ORIGINE / ORIGIN OF STEEL
EUROPEAN UNION

Eline Process Equipment Inc. OCT 2 0 2013 Quality Department

NOTE / NOTES	UFFICIO CONTROLLO QUALITA' / QUALITY CONTROL DEPARTEMENT	ENTE UFFICIALE DI COLLAUDO / INSPECTION AUTHORITY	MARCHIO PRODUZIONE / MANUFACTURER'S SYMBOL
100% MANUFACTURED IN ITALY MANUFACTURING IN ACCORDANCE WITH ORDER AND SPECIFICATION MATERIAL IN ACCORDANCE WITH NACE MR-0175/2009 ISO 15156-2009 - SOUR SERVICE MATERIAL IN ACCORDANCE WITH NACE MR-0103/2012 - SOUR SERVICE	S. Erigo		MFF

PO# P8049-5B1108-80 Item# 3
Heat Number: 05U
Trans Am Piping Products Ltd. - Rev'd By: SB
Shipment/Seq #: S 13 - 1131 13

1" CL 3000 FS SCRD UNION
A105N

I.M.L. - INDUSTRIA MECCANICA LIGURE S.P.A.
Via Giancarlo Farina, 25 - 16030 Casarza Ligure - GE - ITALY
Tel. +39 0185 467661 - Fax +39 0185 466510 - E-mail quality.iml@farinagroup.com
MATERIAL TEST DEPARTMENT

COMPANY WITH QUALITY SYSTEM ISO 9001: 2008 CERTIFIED BY RINA CERT. N°23/91/S

INSPECTION CERTIFICATE EN 10204:2004 / 3.1

Nr 23817 Dated 20.02.2013

TRANS AM PIPING PRODUCTS LTD.

9335 Endeavor Drive S.E.
Calgary, Alberta T3S 0A1 CA

Purchase Order Nr	CI-13 - 189 C/O-1
Item Nr	045
Packing List Nr	231
Invoice Nr	206

Heat Code	Heat Nr	Quantity	Description
05U	12/71128	2.000,00	FITTING UNION F/F THRD NPT 3M 1" A105N (NUT+MALE+FEMALE)

Element	C	Si	Mn	S	P	Cr	Ni	Mo	Ti	Cu
ASTM A105 (LADLE)	0,190	0,230	1,000	0,005	0,011	0,090	0,070	0,020	0,017	0,120

Element	V	Nb	N	AL	C.E.	PRE
ASTM A105 (LADLE)	0,002	--	--	0,025	0,392	--

Test specimen Sect. mm2	Test specimen Lenght mm	Shape 1=O - 2=□	Tensile N/mm2	Yeld Strenght > 0,2% N/mm2	Yeld Strenght >1% N/mm2	Elongation %	Reduction of area %
122,65	50,00	1	520,0	325,0	--	34,5	58,0

HARDNESS HBW	TYPE	IMPACT TEST Test specimen	°C	1-Joule	2-Joule	3-Joule
162,0 - 170,0	KV	10x10mm	-10	66	66	63

Heat treatment	Normalized at 880°-920°C / Air Cool	ELECTRIC FURNACE
Dimension in accordance	MSS SP83 Ed.2006 - ANSI/ASME B1.20.1 Ed.1992 - MSS SP25 Ed.2008 - NACE MR 0175 ISO 15156 Ed.2009 - NACE MR 0103 Ed. 2012 - SUPPLIED MATERIAL MEETS SPECIFICATIONS AND P.O. REQUIREMENTS	
Material in accordance	ASME SA ASTM A105-11a	

Visual & Dimensional	SATISFACTORY	Origin	EUROPEAN UNION	Our Ref.	2013-2E201-0000185-0045

Notes —

Blue Process Equipment Inc. OCT 2 0 2013 Quality Department

QUALITY CONTROL DEPT.	INSPECTION AUTHORITY	MANUFACTURER'S SYMBOL
Boris Fizzotti		IML or

5Blue
Process Equipment Inc.

RECEIVING INSPECTION REPORT

DATE: OCT 2 8 2013 **PURCHASE ORDER#** 1108-80

CUSTOMER/OWNER_____

DESCRIPTION OF MATERIAL:	PLATE	TUBE /PIPE (Pipe)	BAR	FITTINGS	

		YES	NO
1	MATERIALS CORRECT TO PURCHASE ORDER:	✓	
2	MTR SUPPLIED WITH MATERIALS	✓	
3	MTR CHECKED AGAINST PACKING SLIP	✓	
4	MTR CORRECT FOR THIS MATERIAL	✓	
5	IS MATERIALS IN GOOD CONDITION (NO DAMAGE):	✓	
6	IS MATERIAL THE SAME SIZE AND SCHEDULE AS REQUIRED ON THE PURCHASE ORDER:	✓	
7	IS MATERIAL THE CORRECT GRADE AS REQUIRED ON THE PURCHASE ORDER	✓	
8	IS THE MATERIAL LEGIBLY MARKED FROM THE SUPPLIER? THIS MAY BE STAMPED or STENCILED (record Grade. Type, Heat # And any other relevant information)	✓	

5 Blue Process Equipment Inc. OCT 2 8 2013 Quality Department

NOTE: If any of these inspection steps cannot be completed the inspector shall notify the QS ASAP. The QS shall make out a NCR detailing the discrepancies and the material in question shall be quarantined until a satisfactory solution to the problem can be resolved. This may include rework or sending the material back to the supplier

Inspector :_____ **Signature:** _____ **Date** OCT 2 8 2013

ROSEMARY KUNTZ
SAFETY / MTR
(780) 955-2040E:226

Trans Am

PIPING PRODUCTS LTD.

Shipped Date
Oct 24, 2013

Sold To
Blue Process Equipment Inc.
2303 - 8 Street
Nisku, Ab

T9E 7Z3
Ordered By Tara

Ship To

Ph# 780 955-2040

Customer P.O.#	Job# / Tag#	T/A Sales Order #
P8049-5B1108-80		E13 - 43897

Shipping Instructions	Freight	Date Ordered
DELIVERY THURSDAY AM TRUCK		Oct 23, 2013

Item	Description	Qty.Ord.	Um	Qty.Ship.	Backorder	Heat #	Mnf
1	1-1/2" XH SEAMLESS CS PIPE A106 GR B PE - SRL	40	FT	43.28		11109306	HV
2	4" CL 300 BLIND FLANGE RF A105N D/T 1/2 D/T 1/2 NPT ON CENTER	2	EA	2		12/35006	MFF
3	1" CL 3000 FS SCRD UNION A105N	20	EA	20		05U	IML

Total MTR's Listed 3

Manufacturer's Legend & Alberta CRN #

HV Hengyang Valin Steel Tube

IML Industria Meccanica Ligure SpA
OA9221.52 Exp. Feb 2014

MFF Metalfar SpA
OB11962.2 Exp. Feb 2022

RECEIVED OCT 25 2013

Blue Process Equipment Inc. OCT 28 2013 Quality Department

Weight Shipped	Skid	Crate	Sack	Box	Loose	Loose Pipe	Pipe Bundle	Misc.	Trans Am Representative
242 Lbs.				2		2			Matthew (Moe) O'Donnell

is a Registered Trademark of
Trans Am Piping Products Ltd.

Packing List / MTR Summary

1711 - 66th. Avenue, Edmonton, Alberta T6P 1Y9
Ph# (780) 440-4567 Fax# (780) 440-1488

PO# P8049-5B1108-80 Item# 1
Heat Number: 11109306 1-1/2" XH SEAMLESS CS PIPE
Trans Am Piping Products Ltd. - Rev'd By: SB A106 GR B P.E. - S.R.L.
Shipment/Seq #: S12 - 1492 3

Contract No.: EI-12-189
PO.NO.: EI-12-189
Name of Customer: TRANS AM PIPING PRODUCTS LTD.,
L/C NO.:
Description: PIPE

HENGYANG VALIN STEEL TUBE CO.,LTD

MILL INSPECTION CERTIFICATE

Date: APR 30,2012
Page: 1/1

Add: 10 Dalixincun, Hengyang City, Hunan, China
Tel and Fax: +86 734 8873739 8872942
Cable: 6993
P.C. 421001

SPEC:ASTM A106-B-2008 ,ASME SA106-B-2008 ,CSA Z245.1-2007 Gr.290 Cat I,NACE MR0175-2009/ISO 15156

CERTIFICATE NO:12-1-04-165

NO.	BATCH NO.	HEAT NO.	STEEL GRADE	SIZE	BUNDLES	PIECES	FEETS	QUANTITY (MT)	ACTUAL WEIGHT(MT)
1	12-A5346	11109306	B	1-1/2" XS A106 GR B P.E. SRL					

NO.	DELIVERY CONDITION(≥650℃)	NONDESTRUCTIVE TEST ET	NONDESTRUCTIVE TEST UT	CHEMICAL COMPOSITION % (L:Ladle analysis P:Product analysis)	C	Si	Mn	P	S	Cu	Ni	Cr	Mo	V	Ti	B	NB	CE	CE(CSA)
1	NORMALIZED	OK		L	0.17	0.30	1.20	0.017	0.008	0.02	0.02	0.03	0.01	0.01	0	0	0	0.38	0.38
				P	0.17	0.31	1.20	0.016	0.008	0.01	0.02	0.02	0.01	0.01	0	0	0	0.38	0.38
				P	0.17	0.31	1.20	0.016	0.008	0.01	0.02	0.02	0.01	0.01	0	0	0	0.38	0.38

NO.	T.S. (MPA)	Y.S. (MPA)	E.L. (%)	Ak (J) IMPACT SIZE	AK	Ori/Te	HARDNESS BRINNEL (HB)	HYDROSTATIC TEST (MPA)	FLATTEN TEST	BEND TEST
	Strip,L,bo=19mm,Lo=50mm									
1	485	385	37				163	17.0	OK	OK

REMARKS: 1.We hereby certify that this certificate of quality is issued and signed by the manufacture.
2. We hereby certify that the properties described herein meet the requirement of the above spec.
3. We hereby certify that this certificate is issued accordance with EN 10204 3.1B
4. SPECIMEN SIZE: (Pipe end, Longitudinal, Gauge Length=2")
A.For pipes≤1" full length specimen were used;
B.For pipes>1" longitudinal strip specimen were used; the width of the gauge length portion is 3/4"
5.NORMALIZED:900°C
6.DIMENSION STANDARD:ASME B36.10
7.MANUFACTURE METHOD:COLD DRAWN
8.CE=C+Mn/6+(Cr+Mo+V)/5+(Cu+Ni)/15 CE(CSA)=C+Fx(Mn/6+Si/24+Cu/15+Ni/20+(Cr+Mo+V+Nb)/5+5B)

QUALITY MANAGER

HENGYANG VALIN STEEL TUBE CO., LTD. 衡阳华菱钢管有限公司 HUNAN CHINA

5 Blue Process Equipment Ltd. OCT 2 8 2013 Quality Department

5Blue
Process Equipment Inc.

RECEIVING INSPECTION REPORT

DATE: OCT 17 2013 **PURCHASE ORDER#** 1108-80

CUSTOMER/OWNER_____

DESCRIPTION OF MATERIAL:	PLATE	TUBE /PIPE	BAR	FITTINGS	

		YES	NO
1	MATERIALS CORRECT TO PURCHASE ORDER:	✓	
2	MTR SUPPLIED WITH MATERIALS	✓	
3	MTR CHECKED AGAINST PACKING SLIP	✓	
4	MTR CORRECT FOR THIS MATERIAL	✓	
5	IS MATERIALS IN GOOD CONDITION (NO DAMAGE):	✓	
6	IS MATERIAL THE SAME SIZE AND SCHEDULE AS REQUIRED ON THE PURCHASE ORDER:	✓	
7	IS MATERIAL THE CORRECT GRADE AS REQUIRED ON THE PURCHASE ORDER	✓	
8	IS THE MATERIAL LEGIBLY MARKED FROM THE SUPPLIER? THIS MAY BE STAMPED or STENCILED (record Grade. Type, Heat # And any other relevant information)	✓	

NOTE: If any of these inspection steps cannot be completed the inspector shall notify the QS ASAP. The QS shall make out a NCR detailing the discrepancies and the material in question shall be quarantined until a satisfactory solution to the problem can be resolved. This may include rework or sending the material back to the supplier

OCT 17 2013

Inspector :_____ **Signature:** _____ **Date** _____

ROSEMARY KUNTZ
SAFETY / MTR
(281) 955-2040E:226

GLOBAL MACHINE & SUPPLY INC.
6803 - 71 Street
Edmonton, Alberta
T6B 2M5

Phone: (780) 450-9757
Fax: (780) 450-0298

WORK ORDER No: 124851 Rev No : _____ OPEN DATE : 10/9/2013 Order Entry Initial SF

CUSTOMER: 5BLUE PROCESS EQUIPMENT PRC No: 124851

CUSTOMER P.O. No : P7960-5B1108-80 DATE REQUIRED: 10/11/2013

SECTION	QTY	DESCRIPTION	DRAWING REV. No	MATERIAL TYPE	HEAT NUMBER
A	2	1" 150 RF SPEC BLIND		SA51670N	UFJ

RECEIVED OCT 16 2013

Mill Test Reports required for above item(s): yes ☑ no ☐

10/15/13

ORDER FULFILLMENT CONFIRMATION

(Above signature is required for all accurately "FILLED ORDERS" only.)

NOTE : The above signature is certification that the product(s), as indicated in the "DESCRIPTION", is produced in strict accordance to your Purchase Order Requirements.

SHIPPING INSTRUCTIONS VIA DUNRITE

SHIPPING RECORD

SECTION	QTY	INSPECTOR	SHIPPER	RECEIVER	DATE SHIPPED
A.	2	10/15/13			

5B Process Equipment Ltd. OCT 17 2013 Quality Department

NOTE: The Inspector's signature in the "Shipping Record" is for partial shipments of nonstock items only. A separate sheet shall be attached if additional shipping records are required.

GLOBAL MACHINE & SUPPLY INC.
6803-71 Street
Edmonton, Alberta
T6B 2M5

Phone: 780-450-9757
Fax: 780-450-0298

MILL TEST REPORT

Date: July 17, 2013

HEAT CODE: UFJ
Description: Spectacle Product 1-150
Material Designation: SA516-70N **NACE:** Conforms to Nace MR0175/ISO 15156-2 2009 Annex A & MR0103
Material Supplier: Essar Steel Algoma Inc., via Canadian Plate Products Ltd.
Heat Number: 4019P3-AC5977
Work Order: 114957, Stock

CHEMICAL COMPOSITION %

C	Mn	P	S	Si	Cr	Mo	Ni	Cu	SN	B	AL	Nb	V	Ti	N
.19	1.07	.011	.004	.310	.02	.00	.15	.02	---	.0002	.026	.000	.014	.003	---

MECHANICAL PROPERTIES

Yield Strength (KSI)	Tensile Strength (KSI)	Elongation (%)	Reduction of Area (%)	Hardness (HBW)	Charpy @ - 50°F (FT>LB)	Test Direction	CE
56.0	76.0	23	---	162	71, 67, 63 (67)		.39

MISCELLANEOUS

Steelmaking Process:
Condition of Material: Normalized @ 1670'F 12 min
Grain Size: ASTM Specification A20/ A 20M

Note: The information contained here is a copy of the information for the raw material provided to Global Machine & Supply Inc. for the above mentioned product.

Blue Process Equipment Inc. OCT 7 2013 Quality Department

Original Material: plate

ASTM A516-70N
Global P.O.: 21858
W.O.: 114957

Signed: _____
Quality Assurance Representative

C:\windows\desktop\global qa mtr

5Blue
Process Equipment Inc.

RECEIVING INSPECTION REPORT

DATE: OCT 16 2013 **PURCHASE ORDER#** 1108-80

CUSTOMER/OWNER_____

DESCRIPTION OF MATERIAL:	PLATE	TUBE /PIPE	BAR	FITTINGS	

		YES	NO
1	MATERIALS CORRECT TO PURCHASE ORDER:	✓	
2	MTR SUPPLIED WITH MATERIALS	✓	
3	MTR CHECKED AGAINST PACKING SLIP	✓	
4	MTR CORRECT FOR THIS MATERIAL	✓	
5	IS MATERIALS IN GOOD CONDITION (NO DAMAGE):	✓	
6	IS MATERIAL THE SAME SIZE AND SCHEDULE AS REQUIRED ON THE PURCHASE ORDER:	✓	
7	IS MATERIAL THE CORRECT GRADE AS REQUIRED ON THE PURCHASE ORDER	✓	
8	IS THE MATERIAL LEGIBLY MARKED FROM THE SUPPLIER? THIS MAY BE STAMPED or STENCILED (record Grade. Type, Heat # And any other relevant information)	✓	

5 Blue Process Equipment Inc. OCT 16 2013 Quality Department

NOTE: If any of these inspection steps cannot be completed the inspector shall notify the QS ASAP. The QS shall make out a NCR detailing the discrepancies and the material in question shall be quarantined until a satisfactory solution to the problem can be resolved. This may include rework or sending the material back to the supplier

Inspector :_____ **Signature:** _____ **Date** OCT 16 2013

ROSEMARY KUNTZ
SAFETY / MTR
(780) 955-2040E:226

Trans Am

PIPING PRODUCTS LTD.

Shipped Date
Oct 7, 2013

Sold To
[illegible]ue Process Equipment Inc.
2[illegible]3 - 8 Street
Nisku, Ab

T9E 7Z3
Ordered By Tara
Ph# 780 955-2040

Ship To

Customer P.O.#	Job# / Tag#	T/A Sales Order #
P7942-5B1108-80		E13 - 41720

Shipping Instructions	Freight	Date Ordered
DELVIER MONDAY PLEASE		Oct 4, 2013

Item	Description	Qty.Ord.	Um	Qty.Ship.	Backorder	Heat #	Mnf
1	2" CL 300 BLIND FLANGE RF A350-LF2 CL 1 D/T 1" NPT ON CENTER	1	EA	1		12/30884	MFF

Total MTR's Listed 1

Manufacturer's Legend & Alberta CRN #

MFF Metalfar SpA
OB11962.2 Exp. Feb 2022

RECEIVED OCT 10 2013

Blue Process Equipment Inc. OCT 16 2013 Quality Department

Weight Shipped	Skid	Crate	Sack	Box	Loose	Loose Pipe	Pipe Bundle	Misc.	Trans Am Representative
7 Lbs.								1 BAG	Matthew (Moe) O'Donnell

is a Registered Trademark of
Trans Am Piping Products Ltd.

Packing List / MTR Summary

1711 - 66th. Avenue, Edmonton, Alberta T6P 1Y9
Ph# (780) 440-4567 Fax# (780) 440-1488

PO# P7942-5B1108-80 Item# 1
Heat Number: 12/30884 Item# 1
TransAm Piping Products Ltd. - Rev'd By: JES
P.O./Seq #: EL-13 - 10467 - 1

2" CL 300 BLIND FLANGE RF
A350 LF2 CL 1
D/T 1" NPT ON CENTER

METALFAR
PRODOTTI INDUSTRIALI S.P.A.
STAMPAGGIO A CALDO DI ACCIAI COMUNI - LEGATI E INOSSIDABILI

SEDE AMMINISTRATIVA E STABILIMENTO:
23861 CESANA BRIANZA (LC) - Italy
Via G. Parini, 28
Tel. +39 031.655441
Fax +39 031.655149
quality.mff@farmas.com

COMPANY WITH QUALITY MANAGEMENT SYSTEM CERTIFIED BY DNV
= ISO 9001:2008 =

SALA PROVE E ANALISI MATERIALI / MATERIAL TEST DEPARTMENT

CERTIFICATO DI COLLAUDO SECONDO EN 10204 - 3.1 INSPECTION CERTIFICATE

Certif. N. 5410	Del/Dated 16.11.2012	Fattura / Invoice N. 3757	Del/Dated 16.11.2012
DDT / Del Note N. 4424	Del/Dated 16.11.2012	Ns.Ord. / Our ref. N.	Del/Dated

TRANS AM PIPING PRODUCTS LTD	Dest.: TRANS AM PIPING PRODUCTS LTD
9335 ENDEAVOR DRIVE S.E.	9335 - Endeavor Drive S.E.
T3S 0A1 CALGARY, ALBERTA CA	T3S 0A1 Calgary, ALBERTA CA

COD. COL. / HEAT CODE	COLATA / HEAT	POS. / ITEM	VS.ORDINE / YOUR REFERENCE	Q.TA' / Q.TY	DESCRIZIONE / DESCRIPTION	DIM.IN ACC. A / DIM. ACCORDANCE TO	VISIVO E DIMENS. / VIS. & DIMENS.
	12/72687	201	CI-12-430	125,00	S/W 600 RF 1" XXS A105N	ASME/ANSI B16.5 -2009	SATISFACTORY

MATERIALE / MATERIAL	C%	Si%	Mn%	S%	P%	Cr%	Ni%	Mo%	Ti%	Cu%	V%	Nb%	N%	Al%	C.E.%
ASTM A105 (LADLE)	0,200	0,210	0,930	0,009	0,015	0,150	0,060	0,020	0,020	0,180	0,003	0,002	0,000	0,025	0,406

PROVETTA / TEST SPECIMEN SEZ. mm2 / SECT. mm2	LUNG. mm / LENGHT mm	FORMA / SHAPE 1=O 2=□	SNERVAMENTO / YIELD POINT N/mm2 >=0,2%	ROTTURA / TENSILE STRENGHT N/mm2 >=	ALLUNGAMENTO / ELONGATION %>=	CONTRAZIONE / REDUCTION OF AREA %>=	DUREZZA / HARDNESS HBW	RESILIENZA / IMPACT TEST - JOULE/cm2 TIPO / TYPE 10x10mm	°C	1	2	3	SNERVAMENTO / YIELD POINT N/mm2 >=1,0%	Ns.Rif. / OUR REF.
126,60	50,80	1	330,0	528,0	31,0	58,0	159,0 - 163,0	KV	20	86	82	88	0,0	

MATERIALE IN ACCORDO A / MATERIAL IN ACC. TO: ASTM/ASME A 105/SA 105 M - 11 ASME CODE SECT. II, PART A, ED. 2010 ADD. 2011a
CSA Z245.12 GRADE 248 CAT.I SOUR SERVICE

TRATTAMENTO TERMICO / HEAT TREATMENT: NORMALIZED AT 920 C - COOLED IN STILL AIR
FORNO / FURNACE: ELECTRIC FURNACE
ORIGINE / ORIGIN OF STEEL: EUROPEAN UNION

COD. COL. / HEAT CODE	COLATA / HEAT	POS. / ITEM	VS.ORDINE / YOUR REFERENCE	Q.TA' / Q.TY	DESCRIZIONE / DESCRIPTION	DIM.IN ACC. A / DIM. ACCORDANCE TO	VISIVO E DIMENS. / VIS. & DIMENS.
	12/30884	039	CI-12-476	100,00	BLIND 300 RF 2" LF2CL1	ASME/ANSI B16.5 -2009	SATISFACTORY

MATERIALE / MATERIAL	C%	Si%	Mn%	S%	P%	Cr%	Ni%	Mo%	Ti%	Cu%	V%	Nb%	N%	Al%	C.E.%
ASTM A350 LF2 CL1/2 (LADLE)	0,200	0,220	0,910	0,009	0,013	0,140	0,060	0,020	0,017	0,140	0,002	0,001	0,000	0,025	0,397

PROVETTA / TEST SPECIMEN SEZ. mm2 / SECT. mm2	LUNG. mm / LENGHT mm	FORMA / SHAPE 1=O 2=□	SNERVAMENTO / YIELD POINT N/mm2 >=0,2%	ROTTURA / TENSILE STRENGHT N/mm2 >=	ALLUNGAMENTO / ELONGATION %>=	CONTRAZIONE / REDUCTION OF AREA %>=	DUREZZA / HARDNESS HBW	RESILIENZA / IMPACT TEST - JOULE/cm2 TIPO / TYPE 10x10mm	°C	1	2	3	SNERVAMENTO / YIELD POINT N/mm2 >=1,0%	Ns.Rif. / OUR REF.
126,60	50,80	1	344,0	518,0	31,0	59,0	156,0 - 159,0	KV	-50	65	63	67	0,0	

MATERIALE IN ACCORDO A / MATERIAL IN ACC. TO: ASTM/ASME A 350/SA 350 M - 11 ASME CODE SECT. II, PART A, ED. 2010 ADD. 2011a
CSA Z245.12 GRADE 248 CAT.II SOUR SERVICE

TRATTAMENTO TERMICO / HEAT TREATMENT: NORMALIZED AT 930 C - COOLED IN STILL AIR
FORNO / FURNACE: ELECTRIC FURNACE
ORIGINE / ORIGIN OF STEEL: EUROPEAN UNION

Blue Process Equipment Inc. OCT 16 2013 Quality Department

NOTE / NOTES	UFFICIO CONTROLLO QUALITA' / QUALITY CONTROL DEPARTEMENT	ENTE UFFICIALE DI COLLAUDO / INSPECTION AUTHORITY	MARCHIO PRODUZIONE / MANUFACTURER'S SYMBOL
100% MANUFACTURED IN ITALY MANUFACTURING IN ACCORDANCE WITH ORDER AND SPECIFICATION MATERIAL IN ACCORDANCE WITH NACE MR-0175/2009 ISO 15156-2009 - SOUR SERVICE MATERIAL IN ACCORDANCE WITH NACE MR-0103/2010 - SOUR SERVICE	S. Corti		MFF

5Blue
Process Equipment Inc.

RECEIVING INSPECTION REPORT

DATE: OCT 16 2013 PURCHASE ORDER# 1108-80

CUSTOMER/OWNER_____

DESCRIPTION OF MATERIAL:	PLATE	TUBE /PIPE	BAR	FITTINGS	Pipe

		YES	NO
1	MATERIALS CORRECT TO PURCHASE ORDER:	✓	
2	MTR SUPPLIED WITH MATERIALS	✓	
3	MTR CHECKED AGAINST PACKING SLIP	✓	
4	MTR CORRECT FOR THIS MATERIAL	✓	
5	IS MATERIALS IN GOOD CONDITION (NO DAMAGE):	✓	
6	IS MATERIAL THE SAME SIZE AND SCHEDULE AS REQUIRED ON THE PURCHASE ORDER:	✓	
7	IS MATERIAL THE CORRECT GRADE AS REQUIRED ON THE PURCHASE ORDER	✓	
8	IS THE MATERIAL LEGIBLY MARKED FROM THE SUPPLIER? THIS MAY BE STAMPED or STENCILED (record Grade, Type, Heat # And any other relevant information)	✓	

5 Blue Process Equipment Inc. OCT 16 2013 Quality Department

NOTE: If any of these inspection steps cannot be completed the inspector shall notify the QS ASAP. The QS shall make out a NCR detailing the discrepancies and the material in question shall be quarantined until a satisfactory solution to the problem can be resolved. This may include rework or sending the material back to the supplier

Inspector :_____ Signature: RKuntz Date OCT 16 2013

ROSEMARY KUNTZ
SAFETY / MTR
(780) 955-2040E:228

Trans Am
PIPING PRODUCTS LTD.

Shipped Date
Oct 9, 2013

Sold To
[illegible]ue Process Equipment Inc.
[illegible]3 - 8 Street
Nisku, Ab

T9E 7Z3
Ordered By

Ship To

Ph# 780 955-2040

Customer P.O.#	Job# / Tag#	T/A Sales Order #
P7961-5B1108-80		E13 - 42306

Shipping Instructions	Freight	Date Ordered
DELIVER PLEASE		Oct 9, 2013

Item		Description	Qty.Ord.	Um	Qty.Ship.	Backorder	Heat #	Mnf
1	1X4	SCH 160 SEAMLESS CS NIPPLE A106 GR B TBE	20	EA	20		107710	IML
2	1"	SCH 160 SEAMLESS CS PIPE A106 GR B PE - SRL (APPROVED MANUFACTURER)	120	FT	129.96		218279	BTL
3	1"	CL 3000 FS SCRD TEE A105N	10	EA	10		T3L	IML
4	1"	CL 3000 FS 90 SCRD ELBOW A105N	20	EA	20		4037	BWS

Total MTR's Listed 4

Manufacturer's Legend & Alberta CRN #

BTL Benteler AG

BWS Both-Well Steel Fittings Co.
OA11939.52 Exp. Nov 2017

IML Industria Meccanica Ligure SpA
OA9221.52 Exp. Feb 2014

Trans Process Equipment Inc. OCT 15 2013 Quality Department

RECEIVED OCT 10 2013

Weight Shipped	Skid	Crate	Sack	Box	Loose	Loose Pipe	Pipe Bundle	Misc.	Trans Am Representative
479 Lbs.	1						1		Matthew (Moe) O'Donnell

is a Registered Trademark of
Trans Am Piping Products Ltd.

Packing List / MTR Summary

1711 - 66th. Avenue, Edmonton, Alberta T6P 1Y9
Ph# (780) 440-4567 Fax# (780) 440-1488

1" SCH 160 (250) SMLS PIPE
A106 GR B P.E.(S.R.L.)
(APPROVED MANUFACTURER)

PO# P7961-5B1108-80 Item# 2
Heat Number: 1218279
Trans Am Piping Products Ltd. - Rev'd By: SB
Shipment/Seq #: S13 - 1006 - 9

Benteler Steel/Tube GmbH
Postfach 13 40
33043 Paderborn
Deutschland
Tel.: +49.5254.81-0 Fax: +49.5254.13666

BENTELER
Steel/Tube

ABNAHMEPRÜFZEUGNIS EN 10204-3.1

INSPECTION CERTIFICATE EN 10204-3.1
CERTIFICAT DE RECEPTION EN 10204-3.1
EN 10204:2005-01

Benteler Steel/Tube GmbH - Postfach 1340 - 33043 Paderborn - Deutschland

Trans Am Piping Products Ltd.
1711 - 66th Avenue
EDMONTON AB T6P 1Y9
CANADA

Dokument-Nr.: **Document No.:** No. du document: 41-727391/001/P

Prüf-Nr.: **Inspection No.:** No. du certificat:

Blatt: 1 / 6
Page:
Page:

Kunden-Bestell-Nr.: **Purchase Order No.:** No. de commande du client: BST 12-5609 / Trans Am CI-12-522

Hersteller: Warmrohrwerk/Zieherei
Manufacturer: [DIN EN ISO 9001, ISO/TS-16949 CERTIFIED BY TUEV NORD CERT]
Producteur: [PED 97/23/EC CERTIFIED BY TUEV NORD SYSTEMS]

Benteler Auftrags-Nr.: **Benteler Order No.:** No. de commande Benteler: 1579940

Herstellerzeichen: **Manufacturer's brand:** Marque du producteur:

Versandanzeigen-Nr.: **Dispatch Note No.:** No. d'avis d'expédition: 4125201

Stempel des Abnahmebeauftragten: WA
Stamp of the inspection representative:
Poinçon du contrôleur:

Produkt: NAHTLOSE STAHLROHRE
Product: SEAMLESS STEEL TUBES
Produit: TUBES D' ACIER SANS SOUDURE

Stahlerschmelzungsverfahren: ELEKTROSTAHL
Steelmaking process: ELECTRIC FURNACE
Procédé d'élaboration de l'acier: FOUR ELECTRIQUE

Lieferbedingungen: **Terms of delivery:** Conditions de livraison:	ASME SA-106, ASME Section II Part A Edition 2010 Addenda 2011a, S6, ASTM-A 106-2011, S6, API Specification 5L Forty-Fourth Edition, October 2007, ISO 3183:2007, PSL 1, incl. ADDENDUM 3, CSA Standard Z245.1-07 Category I, Sour Service, ANSI/NACE MR0175/ISO 15156-1: 2009, ANSI/NACE MR0175/ISO 15156-2: 2009
Maße - Toleranzen: **Dimensions-tolerances:** Dimensions-tolérances:	ASME B36.10M-2004, ASME SA-530, ASME Section II Part A Edition.2010 Addenda 2011a, ASTM-A 530-2004a
Stahlsorte: **Steel grade:** Nuance d'acier:	GRADE 290, GRADE B, GRADE X 42
Lieferzustand: **Delivery condition:** État de livraison:	Hot rolled
Produktkennzeichnung: **Product marking:** Marquage du produit:	see attachment product marking

Blue Process Equipment Inc.
OCT 16 2013
Quality Department

Pos. Item Poste	Stück Number Nombre	Maße Dimensions Dimensions	Länge Length Longueur feet	Gewicht Weight Poids lbs	Schmelzen-Nr. Heat No. No. de coulée	Prüfdruck Test pressure Pression d'épreuve PSI	s	Rohr-Nr.-Gruppe Tube number group Série de no. des tubes	Vielfachlängen Multiple lengths Longueurs multiples
0001	204	1/2" NPS * Sched. 80 20 FT - 22 FT	4294,62	4674	574683	3000	5		

Benteler Steel/Tube GmbH
Postfach 13 40
33043 Paderborn
Deutschland
Tel.: +49.5254.81-0 Fax: +49.5254.13666

BENTELER
Steel/Tube

ABNAHMEPRÜFZEUGNIS EN 10204-3.1
INSPECTION CERTIFICATE EN 10204-3.1
CERTIFICAT DE RECEPTION EN 10204-3.1

Dokument-Nr.: 41-727391/001/P
Document No.:
No. du document:

Prüf-Nr.:
Inspection No.:
No. du certificat:

Pos. / Item / Poste	Stück / Number / Nombre	Maße / Dimensions / Dimensions	feet	Länge / Length / Longueur feet	Gewicht / Weight / Poids lbs	Schmelzen-Nr. / Heat No. / No. de coulée	Prüfdruck / Test pressure / Pression d'épreuve PSI	s	Rohr-Nr.-Gruppe / Tube number group / Série de no. des tubes	Vielfachlängen / Multiple lengths / Longueurs multiples
0002	160	1" NPS * Sched. 80 20 FT - 22 FT		3501,31	7672	574683	3000	5		
0004	182	1" NPS * Sched. 160 20 FT - 22 FT		3958,86	11427	218279	3000	5		

Schmelzenanalyse [%] / Heat analysis [%] / Analyse sur coulée [%]

Pos. / Item / Poste	Schmelzen-Nr. / Heat No. / No. de coulée	C	SI	MN	P	S	CR	MO	NI	CU	V	NB	TI	B
0001	574683	0,140	0,210	0,76	0,008	0,003	0,10	0,02	0,06	0,06	0,001	0,012	0,002	0,0001
0002	574683	0,140	0,210	0,76	0,008	0,003	0,10	0,02	0,06	0,06	0,001	0,012	0,002	0,0001
0004	218279	0,140	0,200	0,76	0,008	0,003	0,10	0,02	0,06	0,07	0,001	0,012	0,002	0,0001

1. Formel: CE IIW = C + (Mn/6) + ((Cr + Mo + V)/5) + ((Cu + Ni)/15) < = 0,40 %
2. Formel: CEV = C + F*((Mn/6) + (Si/24) + (Cu/15) + (Ni/20) + ((Cr + Mo + V + Nb)/5) + (5*B)) < = 0,40
3. Formel: Mn/C > = 3/1
4. Formel: Cr + Cu + Mo + Ni + V < = 1,00 %

Formelergebnisse / Formula results / Résultats des formules

Pos. / Item / Poste	Schmelzen-Nr / Heat No. / No. de coulée	1. Formel / 1. Formula / 1. Formule	2. Formel / 2. Formula / 2. Formule	3. Formel / 3. Formula / 3. Formule	4. Formel / 4. Formula / 4. Formule
0001	574683	0,299	0,284	5,429	0,241
0002	574683	0,299	0,284	5,429	0,241
0004	218279	0,300	0,284	5,429	0,251

5 Blue Process Equipment Inc.
OCT 16 2013
Quality Department

Benteler Steel/Tube GmbH
Postfach 13 40
33043 Paderborn
Deutschland
Tel.: +49.5254.81-0 Fax: +49.5254.13666

BENTELER
Steel/Tube

ABNAHMEPRÜFZEUGNIS EN 10204-3.1
INSPECTION CERTIFICATE EN 10204-3.1
CERTIFICAT DE RECEPTION EN 10204-3.1

Dokument-Nr.: / **Document No.:** / No. du document: 41-727391/001/P

Prüf-Nr.: / **Inspection No.:** / No. du certificat:

Produktanalyse [%] / Product analysis [%] / Analyse sur produit [%]

Pos. Item Poste	Schmelzen-Nr. Heat No. No. de coulée	C	SI	MN	P	S	CR	MO	NI	CU	V	NB	TI	B
0001	574683	0,140	0,210	0,77	0,008	0,003	0,11	0,03	0,06	0,07	0,002	0,015	0,002	0,0001
0001	574683	0,130	0,210	0,76	0,007	0,003	0,11	0,03	0,06	0,07	0,001	0,013	0,002	0,0001
0002	574683	0,140	0,210	0,74	0,008	0,003	0,11	0,03	0,06	0,06	0,002	0,018	0,002	0,0001
0002	574683	0,130	0,210	0,76	0,007	0,003	0,11	0,03	0,06	0,07	0,001	0,013	0,002	0,0001
0004	218279	0,150	0,210	0,76	0,007	0,003	0,11	0,03	0,06	0,07	0,001	0,015	0,002	0,0002
0004	218279	0,140	0,210	0,76	0,007	0,003	0,11	0,03	0,06	0,07	0,001	0,016	0,002	0,0002

1. Formel: $CE\ IIW = C + (Mn/6) + ((Cr + Mo + V)/5) + ((Cu + Ni)/15) <= 0{,}40\ \%$
2. Formel: $CEV = C + F*((Mn/6) + (Si/24) + (Cu/15) + (Ni/20) + ((Cr + Mo + V + Nb)/5) + (5*B)) <= 0{,}40$
3. Formel: $Mn/C >= 3/1$
4. Formel: $Cr + Cu + Mo + Ni + V <= 1{,}00\ \%$

Formelergebnisse / Formula results / Résultats des formules

Pos. Item Poste	Schmelzen-Nr Heat No. No. de coulée	1. Formel 1. Formula 1. Formule	2. Formel 2. Formula 2. Formule	3. Formel 3. Formula 3. Formule	4. Formel 4. Formula 4. Formule
0001	574683	0,305	0,290	5,500	0,272
0001	574683	0,293	0,270	5,846	0,271
0002	574683	0,299	0,286	5,285	0,262
0002	574683	0,293	0,270	5,846	0,271
0004	218279	0,313	0,304	5,066	0,271
0004	218279	0,303	0,289	5,428	0,271

Prüfergebnisse / Test results / Résultats des essais

Die Rohre sind auf Dichtheit geprüft durch: / **The tubes have been submitted to a leak tightness test by:** / Les tubes ont passé un contrôle d'étanchéité par:

Hydrostatic test: acc. to CSA Z245.1, holding time min 5 seconds, Test pressure/Time-record

PASSED

Blue Process Equipment Inc. OCT 1 6 2013 Quality Department

Benteler Steel/Tube GmbH
Postfach 13 40
33043 Paderborn
Deutschland
Tel.: +49.5254.81-0 Fax: +49.5254.13666

BENTELER Steel/Tube

ABNAHMEPRÜFZEUGNIS EN 10204-3.1
INSPECTION CERTIFICATE EN 10204-3.1
CERTIFICAT DE RECEPTION EN 10204-3.1

Dokument-Nr.: / **Document No.:** / No. du document: 41-727391/001/P

Prüf-Nr.: / **Inspection No.:** / No. du certificat:

Blatt: 4 / 6
Page:
Page:

Die Rohre wurden zerstörungsfrei geprüft: / **The tubes are non destructive tested:** / Les tubes ont passé un essai non destructif: ET-test: acc. to CSA Z245.1; for imperfections; drilled hole: 3,20 mm — PASSED

Augensichtkontrolle: / **Visual inspection:** / Examen visuel:	PASSED	Biegeversuch: / **Bending test:** / Essai de cintrage:	PASSED	Maßkontrolle: / **Dimensions examination:** / Vérification des dimensions:	PASSED

Ergebnisse der mechanischen Prüfung / **Results of mechanical testing** / Résultats des essais mécaniques

Die Probennahme erfolgte an Vielfachlängen.
The sampling was carried out on multiple lengths.
L'echantillonage etait realise aux longueurs multiples.

Zugversuch längs Vollprobe / **Tensile test longitudinal Full section test specimen** / Essai de traction longitudinale Eprouvette a section complete

Pos. / **Item** / Poste	Proben-Nr. / **Specimen No.** / No. de l'éprouvette	Schmelzen-Nr. / **Heat No.** / No. de coulée	Probenabmessung / **Specimen dimensions** / Dimensions de l'éprouv.	Streckgrenze / **Yield strength** / Limite élastique	Zugfestigkeit / **Tensile strength** / Résistance à la traction	Dehnung / **Elongation** / Allongement		Einschnürung / **Area reduction** / Coefficient de striction
Anforderungen / **Requirements** / Exigences			mm	ReH N/mm² MIN 290	Rm N/mm² 415-625	A2" % MIN 30	1. Formel **1. Formula** 1. Formule	
0001	000001	574683	21,50 X 3,65	378	501	42		
0002	000001	574683	33,65 X 4,50	360	491	52		
0004	000001	218279	33,60 X 6,45	333	470	52	←	

Härteprüfung / **Hardness test** / Essai de dureté

Pos. / **Item** / Poste	Proben-Nr. / **Specimen No.** / No. de l'éprouv.	Schmelzen-Nr. / **Heat No.** / No. de coulée	Härte / **Hardness** / Dureté				
Anforderungen / **Requirements** / Exigences			HRC	HB MAX 200	HV	HRB	HBW
0001	000001	574683		144			
0002	000001	574683		145			
0004	000001	218279		138	←		

Blue Process Equipment
OCT 16 2013
Quality Department

Benteler Steel/Tube GmbH
Postfach 13 40
33043 Paderborn
Deutschland
Tel.: +49.5254.81-0 Fax: +49.5254.13666

BENTELER
Steel/Tube

ABNAHMEPRÜFZEUGNIS EN 10204-3.1
INSPECTION CERTIFICATE EN 10204-3.1
CERTIFICAT DE RECEPTION EN 10204-3.1

Dokument-Nr.: **Document No.:** No. du document: 41-727391/001/P

Prüf-Nr.: **Inspection No.:** No. du certificat:

Restmagnetismus / **Demagnetize** / Démagnétiser

Pos. / **Item** / Poste: 0001, 0004, 0002, 0004, 0002
demagnetized tubes; 1 measurement per 4 hours on both tube ends Two readings 180° apart around the circumference. Average value max 3.0 Millitesla (24 A/cm), individual value max 3.5 Millitesla (28 A/cm)

Vermerk / **Remark** / Remarque

Pos. / **Item** / Poste: 0001, 0004, 0002, 0004, 0002, 0004, 0002, 0004, 0002
NACE Standard: Hardness acc. to ANSI/NACE MR0175/ISO 15156: HRC max 22., The material meets the requirements of NACE MR0103, Region 3, in accordance to Figure 1 and Appendix A.2, ANSI/NACE MR0175/ISO 15156-2:2009; Certificate remarks: The Material is Aluminium deoxydized and inclusion shape controlled with Calcium-Silicon treatment, It is the end user's responsibility to ensure that all environmental requirements as well as the requirements regarding engineering, construction and operation of facilities are fulfilled in the country of use. Fit for purpose of the parts as well as homologation is not the scope of this contract., This is to confirm that the seamless linepipe supplied by Benteler and verified to CSA Standard Z245.1-07 meets the requirement for micro hardness of max. 248 HV 500 gf., No weld repair has been carried out; Bend test: mandrel diameter 12D; Bending angle: 90 °

Pos. / **Item** / Poste: 0001, 0004, 0002, 0004
Grain size: acc. to ASTM-E 112: Item 001 Heat no. 574683 = 9 - 10, Item 002 heat no. 574683 = 10 - 11, Item 004 heat no. 218279 = 8 - 10.; Grain size and finer: 6

Beiblatt Produktkennzeichnung / **Attachment product marking** / Supplément marquage du produit

Pos. / **Item** / Poste	Produktkennzeichnung / **Produktkennzeichnung** / Marquage du produit	
0001	FS:	BENTELER Z.245.1-07 - ISO 3183 - A 106-S6 - SA-106-S6 Spec 5L-0151.1 API SIGN 1112 PSL1 B/X42/290 SS HEAT-NO. TEST PRESSURE NDE DIMENSIONS WA GERMANY P.O. CI-12-522
0002, 0004	FS:	BENTELER Z.245.1-07 - ISO 3183 - A 106-S6 - SA-106-S6 Spec 5L-0151.1 API SIGN 1012 PSL1 B/X42/290 SS HEAT-NO. TEST PRESSURE NDE DIMENSIONS WA GERMANY P.O. CI-12-522

AEZ = Ätztintenbeschriftung, Etching ink marking, Gravure à l'encre . FK = Farbkennzeichnung, colour marking, marquage par couleur . FS = Farbschablonierung, paint stencilling, marquage par peinture . FSD = Farbstrahldrucker, Colour jet printer, Imprimante à jet d'encre de couleur . LK = Laserkennzeichnung, Laser marking, Marquage laser . PKE = Etikettenkennzeichnung, tag marking, marquage sur étiquette . PS = Prägestempel, die stamp, marquage par poinçonnage . TS = Tintenstrahlkennzeichnung, Ink jet spray marking, imprimante à jet d'encre .

Verkäufer(in) / **Salesman/ woman in charge** / Personne chargée : Mrs Schöneweis, Tel.: 05254/81-4234, Fax: 4289

Quality Department
OCT 16 2013
Process Equipment Inc.

Benteler Steel/Tube GmbH
Postfach 13 40
33043 Paderborn
Deutschland
Tel.: +49.5254.81-0 Fax: +49.5254.13666

BENTELER
Steel/Tube

ABNAHMEPRÜFZEUGNIS EN 10204-3.1
INSPECTION CERTIFICATE EN 10204-3.1
CERTIFICAT DE RECEPTION EN 10204-3.1

Dokument-Nr.:	41-727391/001/P	Prüf-Nr.:	Blatt:	6 / 6
Document No.:		**Inspection No.:**	**Page:**	
No. du document:		No. du certificat:	Page:	

5 Blue Process Equipment Inc.
OCT 16 2013
Quality Department

Paderborn Schloß Neuhaus, 10.12.2012, TEL.: 05254.81-201765 FAX: 05254.81-201752

Abnahmebeauftragter
Inspection representative
Contrôleur
THOMAS GOLLAN / GUT

Es wird bestätigt, daß die gelieferten Erzeugnisse den techn. Lieferbedingungen des Auftrages entsprechen.Dieses Dokument wurde mittels EDV erstellt und ist ohne Unterschrift rechtsgültig.
We certify that the supplied products comply with the order specification.This document was prepared by means of electronic data processing and is valid without signature.
Nous attestons que les produits livrés sont conformes aux stipulations de la commande.Ce document a été établi par traitement électronique de l'information et est valide sans signature.

5Blue
Process Equipment Inc.

RECEIVING INSPECTION REPORT

DATE: OCT 16 2013 **PURCHASE ORDER#** 1108-80

CUSTOMER/OWNER_____

DESCRIPTION OF MATERIAL:	PLATE	TUBE /PIPE	BAR	FITTINGS	

		YES	NO
1	MATERIALS CORRECT TO PURCHASE ORDER:	✓	
2	MTR SUPPLIED WITH MATERIALS	✓	
3	MTR CHECKED AGAINST PACKING SLIP	✓	
4	MTR CORRECT FOR THIS MATERIAL	✓	
5	IS MATERIALS IN GOOD CONDITION (NO DAMAGE):	✓	
6	IS MATERIAL THE SAME SIZE AND SCHEDULE AS REQUIRED ON THE PURCHASE ORDER:	✓	
7	IS MATERIAL THE CORRECT GRADE AS REQUIRED ON THE PURCHASE ORDER	✓	
8	IS THE MATERIAL LEGIBLY MARKED FROM THE SUPPLIER? THIS MAY BE STAMPED or STENCILED (record Grade. Type, Heat # And any other relevant information)	✓	

5 Blue Process Equipment Inc. Quality Department

NOTE: If any of these inspection steps cannot be completed the inspector shall notify the QS ASAP. The QS shall make out a NCR detailing the discrepancies and the material in question shall be quarantined until a satisfactory solution to the problem can be resolved. This may include rework or sending the material back to the supplier

Inspector :_____ **Signature:** _____ **Date** OCT 16 2013

ROSEMARY KONTZ
SAFETY / MTR
(780) 955-2040E:220

Trans Am

PIPING PRODUCTS LTD.

Shipped Date
Oct 9, 2013

Sold To
Blue Process Equipment Inc.
2[illegible]3 - 8 Street
Nisku, Ab

T9E 7Z3
Ordered By

Ship To

Ph# 780 955-2040

Customer P.O.#	Job# / Tag#	T/A Sales Order #
P7961-5B1108-80		E13 - 42306

Shipping Instructions	Freight	Date Ordered
DELIVER PLEASE		Oct 9, 2013

Item		Description	Qty.Ord.	Um	Qty.Ship.	Backorder	Heat #	Mnf
1	1X4	SCH 160 SEAMLESS CS NIPPLE A106 GR B TBE	20	EA	20		107710	IML
2	1"	SCH 160 SEAMLESS CS PIPE A106 GR B PE - SRL (APPROVED MANUFACTURER)	120	FT	129.96		218279	BTL
3	1"	CL 3000 FS SCRD TEE A105N	10	EA	10		T3L	IML
4	1"	CL 3000 FS 90 SCRD ELBOW A105N	20	EA	20		4037	BWS

Total MTR's Listed 4

Manufacturer's Legend & Alberta CRN #

BTL Benteler AG

BWS Both-Well Steel Fittings Co.
OA11939.52 Exp. Nov 2017

IML Industria Meccanica Ligure SpA
OA9221.52 Exp. Feb 2014

RECEIVED OCT 10 2013

Blue Process Equipment Inc. OCT 16 2013 Quality Department

Weight Shipped	Skid	Crate	Sack	Box	Loose	Loose Pipe	Pipe Bundle	Misc.	Trans Am Representative
479 Lbs.	1						1		Matthew (Moe) O'Donnell

is a Registered Trademark of
Trans Am Piping Products Ltd.

Packing List / MTR Summary

1711 - 66th. Avenue, Edmonton, Alberta T6P 1Y9
Ph# (780) 440-4567 Fax# (780) 440-1488

PO# P7961-5B1108-80 Item# 1
Heat Number: 107710
Trans Am Piping Products Ltd. - Rev'd By: SB
Shipment/Seq #: S 13 - 1457 57

1 X 4 SCH 160 SMLS STEEL NIPPLES
A106 TBE

ITEX PIPING PRODUCTS
13411 WEST ROAD
77041 HOUSTON U.S. - TEXAS
sales@itexpp.com

INSPECTION CERTIFICATE EN 10204:2004 / 3.1

Nr 69 Dated 05 16 2013

TRANS AM PIPING PRODUCTS LTD.

9335 ENDEAVOR DRIVE S.E..
CALGARY, ALBERTA T3S 0A1 CA

Purchase Order Nr CI-13 - 312
Item Nr 23
Invoice Nr 2013-51E41-0000218

Heat Code	Heat Nr	Quantity	Description
	107710	644.00	P.NIPPLE TBE NPT S-160 1" L100mm(4") A106B/API 5LB

Element	C	Si	Mn	S	P	Cr	Ni	Mo	Ti	Cu
ASTM A106/B API 5LB (LADLE)	0.120	0.230	1.050	0.008	0.012	0.100	0.100	0.050	--	0.220

Element	V	Nb	N	AL	C.E.	PRE
ASTM A106/B API 5LB (LADLE)	0.002	--	--	0.030	0.347	--

Test specimen Sect. mm2	Test specimen Lenght mm	Shape 1=O - 2=□	Tensile N/mm2	Yeld Point >0,2% N/mm2	Yeld Point >1% N/mm2	Elongation %	Reduction of area %
33.60	50.80		480.0	321.0	--	41.0	79.0

HARDNESS HBW	TYPE	IMPACT TEST Test specimen	°C	1-Joule	2-Joule	3-Joule
160.0 - 164.0	KV	10x5mm	-10	56	58	60

Bend test	PASSED				
Hydrostatic test	psi 2500				
Heat treatment	Normalized at 880°C-920°C / Air Cool				ELECTRIC FURNACE
Dimension in accordance	ASME B36.10 Ed.2004 - ANSI/ASME B1.20.1 Ed.1992 - MSS SP25 Ed.2008 - ASTM A733 Ed.2009 - NACE MR 0175 ISO 15156 Ed.2009 - NACE MR 0103 Ed. 2010 - SUPPLIED MATERIAL MEETS SPECIFICATIONS AND P.O. REQUIREMENTS				
Material in accordance	ASME SA ASTM A106/A106M-10 Gr. B				
Visual & Dimensional	SATISFACTORY	Origin	U.S.A.	Our Ref.	2013-51E21-0000049-0023

Notes ---

Blue Process Equipment Inc.
OCT 16 2013
Quality Department

QUALITY CONTROL DEPT.	INSPECTION AUTHORITY	MANUFACTURER'S SYMBOL
Boris Fizdin		IML or

PO# P7961-5B1108-80 Item# 3
Heat Number: T3L
Trans Am Piping Products Ltd. - Rev'd By: SB
Shipment/Seq #: S 13 - 1131 1

1" CL 3000 FS SCRD TEE A105N

I.M.L. - INDUSTRIA MECCANICA LIGURE S.P.A. Via Giancarlo Farina, 25 - 16030 Casarza Ligure - GE - ITALY Tel. +39 0185 467661 - Fax +39 0185 466510 - E-mail quality.iml@farinagroup.com MATERIAL TEST DEPARTMENT	COMPANY WITH QUALITY SYSTEM ISO 9001: 2008 CERTIFIED BY RINA CERT. N°23/91/S

INSPECTION CERTIFICATE EN 10204:2004 / 3.1 — Nr 23817 Dated 20.02.2013

TRANS AM PIPING PRODUCTS LTD. 9335 Endeavor Drive S.E. Calgary, Alberta T3S 0A1 CA	Purchase Order Nr	CI-13 - 189 C/O-1
	Item Nr	028
	Packing List Nr	231
	Invoice Nr	206

Heat Code	Heat Nr	Quantity	Description
T3L	12/71128	3.500,00	FITTING TEE THRD NPT 3M 1" A105N

Element	C	Si	Mn	S	P	Cr	Ni	Mo	Ti	Cu
ASTM A105 (LADLE)	0,190	0,230	1,000	0,005	0,011	0,090	0,070	0,020	0,017	0,120

Element	V	Nb	N	AL	C.E.	PRE
ASTM A105 (LADLE)	0,002	--	--	0,025	0,392	--

Test specimen Sect. mm2	Test specimen Lenght mm	Shape 1=O - 2=□	Tensile N/mm2	Yeld Strenght > 0,2% N/mm2	Yeld Strenght >1% N/mm2	Elongation %	Reduction of area %
122,65	50,00	1	517,0	322,0	--	33,5	58,6

HARDNESS	IMPACT TEST				
HBW	TYPE	Test specimen	°C	1-Joule	2-Joule	3-Joule
165,0 - 170,0	KV	10x10mm	-10	70	61	66

Heat treatment	Normalized at 880°-920°C / Air Cool	ELECTRIC FURNACE
Dimension in accordance	ASME B16.11 Ed.2011 - ANSI/ASME B1.20.1 Ed.1992 - MSS SP25 Ed.2008 - NACE MR 0175 ISO 15156 Ed.2009- NACE MR 0103 Ed. 2012 - SUPPLIED MATERIAL MEETS SPECIFICATIONS AND P.O. REQUIREMENTS	
Material in accordance	ASME SA ASTM A105-11a	

Visual & Dimensional	SATISFACTORY	Origin	EUROPEAN UNION	Our Ref.	2013-2E201-0000185-0028

Notes ---

5 Blue Process Equipment Inc.
OCT 16 2013
Quality Department

QUALITY CONTROL DEPT.	INSPECTION AUTHORITY	MANUFACTURER'S SYMBOL
Boris Fizzotti Boris Fizzotti		IML or

1" CL 3000 FS 90 SCRD ELBOW
A105N

PO# P7961-5B1108-80 Item# 4
Heat Number: 4037
Trans Am Piping Products Ltd. - Rev'd By: SB
Shipment/Seq #: S13 - 1599 5

MILL TEST & INSPECTION CERTIFICATE

ACCORDING TO EN 10204 :2004 3.1

拍瑋鐵工股份有限公司
BOTH-WELL STEEL FITTINGS CO., LTD.
高雄市仁武區烏林里仁心路303號
NO.303, REN-SIN ROAD, REN-WU DISTRICT, KAOHSIUNG CITY, TAIWAN R.O.C.(81460)
TEL: +886-7-3711536, 3710497, 3720260 FAX: +886-7-3713864, 3713882
Web site: http://www.bothwell.com.tw e-mail: box@bothwell.com.tw

CUSTOMER : SEYBOLD INTERNATIONAL CORP.
CERT. NO : 132788 L/C NO :
ORDER NO : 7007171 DATE : 09/10/2013
INVOICE NO : BW01310206144 PAGE : 4 ORIGIN : TAIWAN

ITEM	BW HT.CD.	RAW MATERIAL HEAT NO.	DESCRIPTION	QUANTITY	SPECIFICATION FOR MATERIAL	SPECIFICATION FOR FITTING	INSPECTION SURFACE	INSPECTION DIM.
001	3739	325858	90D ELBOW 1/4" 2000# NPT	100 PC	ASTM A105N -05	ASME B16.11 - 2011	GOOD	GOOD
002	4118	335733	90D ELBOW 2-1/2" 2000# NPT	6 PC	ASME SA105N -A08			
003	4076	334169	45D ELBOW 1-1/2" 2000# NPT	50 PC				
004	4086	334161	45D ELBOW 2" 2000# NPT	100 PC				
005	4037	332514	90D ELBOW 1" 3000# NPT	2000 PC				

ITEM	BW HT.CD.	CHEMICAL COMPOSITION (%) C	Si	Mn	P	S	Cu	Cr	Ni	Mo	V	Cb(Nb)	N	Al	Ti	Zr	CE	MATERIAL SUPPLIER
Min		-	0.10	0.60	-	-	-	-	-	-	-	-	-				-	
Max		0.35	0.35	1.05	0.035	0.040	0.40	0.30	0.40	0.12	0.08	-	-				0.43	
001	3739	0.190	0.200	0.850	0.021	0.010	0.190	0.090	0.050	0.010	0.002	0.001	-				0.368	
002	4118	0.19	0.20	0.84	0.019	0.013	0.13	0.10	0.04	0.01	0.002	0.001	-				0.364	
003	4076	0.19	0.20	0.82	0.016	0.009	0.10	0.07	0.04	0.01	0.002	0.001	-				0.352	
004	4086	0.18	0.21	0.86	0.016	0.009	0.12	0.06	0.04	0.01	0.002	0.001	-				0.348	
005	4037	0.19	0.19	0.84	0.016	0.008	0.15	0.05	0.04	0.01	0.002	0.001	-				0.355	

ITEM	BW HT.CD.	MECHANICAL PROPERTIES T. S. (KSI)	Y. S. (KSI)	EL. (%)	R of A (%)	Hardness (HBW)(AVG)	Charpy Impact -F / 0 ℃ MIN./AVG. / (Joule) 1	2	3	AVG.	HEAT TREATMENT
Min		70	36	22	30	-					NORMALIZED
Max		-	-	-	-	187					
001	3739	76.0	49.0	35.0	66.0	145 146					900℃ A.C.
002	4118	77.2	54.4	36.4	64.5	144 145					
003	4076	77.6	49.5	32.4	65.5	143 145					
004	4086	77.3	51.2	35.2	68.2	144 145					
005	4037	77.9	50.8	34.4	66.4	146 144					

ADDITIONAL TEST／REMARKS
CONFORMS TO NACE MR0175-09 /MR0103-10
STEEL MAKING PROCESS : ELECTRIC FURNACE
CONFORMS TO NACE ISO15156-3 2009

WE HEREBY CERTIFY, THAT THE MATERIAL DESCRIBED ABOVE HAS BEEN TESTED AND COMPLIES WITH THE TERMS OF THE ORDER CONTRACT.

5 Blue Process Equipment Inc. OCT 16 2013 Quality Department

C.C. Huang
Q.C.MANAGER
CHEN CHI HUANG

Y.Y. Chang
INSPECTOR
YUAN YAO CHANG

5Blue
Process Equipment Inc.

RECEIVING INSPECTION REPORT

DATE: OCT 1 6 2013 **PURCHASE ORDER#** 1108-80

CUSTOMER/OWNER_____

DESCRIPTION OF MATERIAL:	PLATE	TUBE /PIPE	BAR	FITTINGS	

		YES	NO
1	MATERIALS CORRECT TO PURCHASE ORDER:	✓	
2	MTR SUPPLIED WITH MATERIALS	✓	
3	MTR CHECKED AGAINST PACKING SLIP	✓	
4	MTR CORRECT FOR THIS MATERIAL	✓	
5	IS MATERIALS IN GOOD CONDITION (NO DAMAGE):	✓	
6	IS MATERIAL THE SAME SIZE AND SCHEDULE AS REQUIRED ON THE PURCHASE ORDER:	✓	
7	IS MATERIAL THE CORRECT GRADE AS REQUIRED ON THE PURCHASE ORDER	✓	
8	IS THE MATERIAL LEGIBLY MARKED FROM THE SUPPLIER? THIS MAY BE STAMPED or STENCILED (record Grade. Type, Heat # And any other relevant information)	✓	

5Blue Process Equipment Inc. OCT 1 6 2013 Quality Department

NOTE: If any of these inspection steps cannot be completed the inspector shall notify the QS ASAP. The QS shall make out a NCR detailing the discrepancies and the material in question shall be quarantined until a satisfactory solution to the problem can be resolved. This may include rework or sending the material back to the supplier

Inspector :_____ **Signature:** RKuntz **Date** OCT 1 6 2013

RÓSEMARY KUNTZ
SÄFETY / MTR
(780) 955-2040E:226

GLOBAL MACHINE & SUPPLY INC.
6803 - 71 Street
Edmonton, Alberta
T6B 2M5
Phone: (780) 450-9757
Fax: (780) 450-0298

WORK ORDER No: 124425 Rev No : OPEN DATE : 9/19/2013 Order Entry Initial SF

CUSTOMER: 5BLUE PROCESS EQUIPMENT PRC No: 124425

CUSTOMER P.O. No : P7800-5B1108-80 DATE REQUIRED: 9/26/2013

SECTION	QTY	DESCRIPTION	DRAWING REV. No	MATERIAL TYPE	HEAT NUMBER
A	2	2" 300 RF SPEC BLIND		SA51670N	TQF
B	1	4" 150 RF SPEC BLIND		SA51670N	TMU
C	1	6" 150 RF SPEC BLIND		SA51670N	UFM
D	1	14" 150 RF PADDLE BLIND & SPACER SET		SA51670N	D - USR R - USM
E	1	16" 150 RF PADDLE BLIND & SPACER SET		SA51670N	D - URU R - TTY
F	1	2" 300 RF BLEED RING C/W 3/4" NPT		SA51670N	UET

Mill Test Reports required for above item(s): yes ☑ no ☐

B.M. 10/10/13
ORDER FULFILLMENT CONFIRMATION
(Above signature is required for all accurately "FILLED ORDERS" only.)

NOTE : The above signature is certification that the product(s), as indicated in the "DESCRIPTION", is produced in strict accordance to your Purchase Order Requirements.

5 Blue Process Equipment Inc. OCT 6 2013 Quality Department

SHIPPING INSTRUCTIONS VIA DUNRITE 1 skid

SHIPPING RECORD

SECTION	QTY	INSPECTOR	SHIPPER	RECEIVER	DATE SHIPPED
A	2			Dunrite 95-1173088	10/7/13
B	1	10/4/13			
C	1				
F	1				
D	1	10/10/13			
E	1				

NOTE: The Inspector's signature in the "Shipping Record" is for partial shipments of nonstock items only. A separate sheet shall be attached if additional shipping records are required.

EXHIBIT 356 A GQP No 356 Revision : 1

RECEIVED OCT 15 2013 RECEIVED OCT 15 2013

GLOBAL
MACHINE & SUPPLY INC.

6803-71 Street
Edmonton, Alberta
T6B 2M5

Phone: 780-450-9757
Fax: 780-450-0298

MILL TEST REPORT

HEAT CODE: USR

Date: October 3, 2013

Description: Spectacle Product 14-150

Material Designation: SA516-70N **NACE:** Conforms to Nace MR0175/ISO 15156-2 2009 Annex A & MR0103

Material Supplier: Hyundai Steel via Edmonton Exchanger

Heat Number: M74676-FA34401901

Work Order: Stock

CHEMICAL COMPOSITION %

C	Mn	P	S	Si	Cr	Mo	Ni	Cu	Ca	S.Al	B	Nb	V	Ti	N
.1491	1.197	.0170	.0040	.330	.18	.00	.18	.140	.0015	.042	.0006	.016	.002	.002	.0049

MECHANICAL PROPERTIES

Yield Strength (KSI)	Tensile Strength (KSI)	Elongation (%)	Reduction of Area (%)	Hardness (BHN)	Charpy @ - 50.8°F (FT.LB)	Test Direction	C.E.
51.3	76.7	28	---	155.8	64, 46, 49 (53)	----	.406

MISCELLANEOUS

Steelmaking Process:

Condition of Material: Normalized @ 1634'F 37mins.

Grain Size: ASTM Specification A20/ A 20M

5 Blue Process Equipment Inc. OCT 16 2013 Quality Department

Note: The information contained here is a copy of the information for the raw material provided to Global Machine & Supply Inc. for the above mentioned product.

Original Material: plate

ASTM A516-70N
Global P.O.: 22120
W.O.: Stock

Signed: _____

Quality Assurance Representative

C:\windows\desktop\global qa mtr

GLOBAL MACHINE & SUPPLY INC.
6803-71 Street
Edmonton, Alberta
T6B 2M5

Phone: 780-450-9757
Fax: 780-450-0298

MILL TEST REPORT

Date: October 3, 2013

Heat Code: USM
Description: Spectacle Product 14-150
Material Designation: SA516-70N
NACE: Conforms to Nace MR0175/ISO 15156-2 2009 Annex A & MR0103
Material Supplier: Dillinger Hutte via Edmonton Exchanger
Heat Number: 381582-43027-01
Work Order: Stock

CHEMICAL COMPOSITION %

C	Mn	P	S	Si	Cr	Mo	Ni	Cu	Sn	AL	Nb	V	Ti	N
.167	1.19	.007	.0011	.369	.042	.020	.036	.036	.002	.036	.000	.000	.003	.0054

MECHANICAL PROPERTIES

Yield Strength (KSI)	Tensile Strength (KSI)	Elongation (%)	Reduction of Area (%)	Hardness (BHN)	Charpy @ -51□F (FTLB)	Test Direction	CE
49.9	74.8	28	---	137	205, 194, 118 (172)		.38

MISCELLANEOUS

Steelmaking Process:
Condition of Material: Normalized @ 1670'F, air cooled.
Grain Size: ASTM Specification A20/A 20M

5 Blue [illegible] Inc. OCT 16 2013 Quality Assessment

Note: The information contained here is a copy of the information for the raw material provided to Global Machine & Supply Inc. for the above mentioned product.

Original Material: plate

ASTM A516-70N
Global P.O.: 22120
W.O.: Stock

Signed: _____
Quality Assurance Representative

C:\windows\desktop\global spa mtr

GLOBAL MACHINE & SUPPLY INC.
6803-71 Street
Edmonton, Alberta
T6B 2M5

Phone: 780-450-9757
Fax: 780-450-0298

MILL TEST REPORT

Date: September 17, 2013

Heat Code: URU
Description: Lap Joint End Ring 28-150; Spectacle Product 16-150
Material Designation: SA516-70N **NACE:** Conforms to Nace MR0175/ISO 15156-2 2009 Annex A & MR0103
Material Supplier: Dillinger Hutte via Edmonton Exchanger
Heat Number: 374582-66654-02
Work Order: 124507, Stock

CHEMICAL COMPOSITION %

C	Mn	P	S	Si	Cr	Mo	Ni	Cu	Sn	AL	Nb	V	Ti	N
.178	1.16	.008	.0008	.379	.029	.009	.034	.022	.001	.036	.000	.000	.002	.0067

MECHANICAL PROPERTIES

Yield Strength (KSI)	Tensile Strength (KSI)	Elongation (%)	Reduction of Area (%)	Hardness (BHN)	Charpy @ -51□F (FTLB)	Test Direction	CE
47.3	73.7	26	---	144	117, 127, 117 (120)		.38

MISCELLANEOUS

Steelmaking Process:
Condition of Material: Normalized @ 1670' F, air cooled.
Grain Size: ASTM Specification A20/A20 M

Elite Process Equipment Inc. OCT 16 2013 Quality Department

Note: The information contained here is a copy of the information for the raw material provided to Global Machine & Supply Inc. for the above mentioned product.

Original Material: plate

ASTM A516-70N
Global P.O.: 22113
W.O.: 124507

Signed: _____
Quality Assurance Representative

C:\windows\desktop\global qa mtr

GLOBAL MACHINE & SUPPLY INC.
6803-71 Street
Edmonton, Alberta
T6B 2M5

Phone: 780-450-9757
Fax: 780-450-0298

MILL TEST REPORT

Date: April 6, 2013

Heat Code: TTY
Description: Spectacle Product -16-150
Material Designation: SA516-70N
NACE: Conforms to Nace MR0175/ISO 15156-2 2009 Annex A & MR0103
Material Supplier: Rukki via American Alloy Steel
Heat Number: 532092-031
Work Order: 120688

CHEMICAL COMPOSITION %

C	Mn	P	S	Si	Cr	Mo	Ni	Cu	B	AL	Sn	V	Ti	Nb
.208	1.08	.011	.001	.35	.04	.003	.04	.014	.0003	.038	.003	.012	.004	.014

MECHANICAL PROPERTIES

Yield Strength (KSI)	Tensile Strength (KSI)	Elongation (%)	Reduction of Area (%)	Hardness (BHN)	Charpy @ -50□F (FTLB)	Test Direction	CE
49	76	27	---	159-166	50, 57, 54 (53.6)		.40

MISCELLANEOUS

Steelmaking Process:
Condition of Material: Normalized.
Grain Size: ASTM Specification A20/A 20M

Process Equipment Inc.
OCT 16 2013
Quality Department

Note: The information contained here is a copy of the information for the raw material provided to Global Machine & Supply Inc. for the above mentioned product.

Original Material: plate

ASTM A516-70N
Global P.O.: 21578
W.O.: 120688

Signed: _____
Quality Assurance Representative

C: windows desktop global qa mtr

5Blue
Process Equipment Inc.

RECEIVING INSPECTION REPORT

DATE: OCT 16 2013 **PURCHASE ORDER#** 1108-80

CUSTOMER/OWNER_____

DESCRIPTION OF MATERIAL:	PLATE	TUBE /PIPE	BAR	FITTINGS	

		YES	NO
1	MATERIALS CORRECT TO PURCHASE ORDER:	✓	
2	MTR SUPPLIED WITH MATERIALS	✓	
3	MTR CHECKED AGAINST PACKING SLIP	✓	
4	MTR CORRECT FOR THIS MATERIAL	✓	
5	IS MATERIALS IN GOOD CONDITION (NO DAMAGE):	✓	
6	IS MATERIAL THE SAME SIZE AND SCHEDULE AS REQUIRED ON THE PURCHASE ORDER:	✓	
7	IS MATERIAL THE CORRECT GRADE AS REQUIRED ON THE PURCHASE ORDER	✓	
8	IS THE MATERIAL LEGIBLY MARKED FROM THE SUPPLIER? THIS MAY BE STAMPED or STENCILED (record Grade, Type, Heat # And any other relevant information)	✓	

5 Blue Process Equipment Inc. OCT 16 2013 Quality Department

NOTE: If any of these inspection steps cannot be completed the inspector shall notify the QS ASAP. The QS shall make out a NCR detailing the discrepancies and the material in question shall be quarantined until a satisfactory solution to the problem can be resolved. This may include rework or sending the material back to the supplier

Inspector : _____ **Signature:** _____ **Date** OCT 16 2013

ROSEMARY KUNTZ
SAFETY / MTR
(780) 955-2040E:226

GLOBAL MACHINE & SUPPLY INC.
6803 - 71 Street
Edmonton, Alberta
T6B 2M5
Phone: (780) 450-9757
Fax: (780) 450-0298

WORK ORDER No: 124425 **Rev No :** _____ **OPEN DATE :** 9/19/2013 **Order Entry Initial** SF

CUSTOMER: 5BLUE PROCESS EQUIPMENT **PRC No:** 124425

CUSTOMER P.O. No : P7800-5B1108-80 **DATE REQUIRED:** 9/26/2013

SECTION	QTY	DESCRIPTION	DRAWING REV. No	MATERIAL TYPE	HEAT NUMBER
A	2	2" 300 RF SPEC BLIND		SA51670N	TQF
B	1	4" 150 RF SPEC BLIND		SA51670N	TMU
C	1	6" 150 RF SPEC BLIND		SA51670N	UFM
D	1	14" 150 RF PADDLE BLIND & SPACER SET		SA51670N	
E	1	16" 150 RF PADDLE BLIND & SPACER SET		SA51670N	
F	1	2" 300 RF BLEED RING C/W 3/4" NPT		SA51670N	UET

Mill Test Reports required for above item(s): yes ☑ **no** ☐

Blue Process Equipment Inc. OCT 16 2013 Quality Department

ORDER FULFILLMENT CONFIRMATION

(Above signature is required for all accurately "FILLED ORDERS" only.)

NOTE : The above signature is certification that the product(s), as indicated in the "DESCRIPTION", is produced in strict accordance to your Purchase Order Requirements.

SHIPPING INSTRUCTIONS VIA DUNRITE 2 cartons

SHIPPING RECORD

SECTION	QTY	INSPECTOR	SHIPPER	RECEIVER	DATE SHIPPED
A	2	SF 10/4/13			
B	1				
C	1				
F	1				

RECEIVED OCT 07 2013

NOTE: The Inspector's signature in the "Shipping Record" is for partial shipments of nonstock items only. A separate sheet shall be attached if additional shipping records are required.

GLOBAL MACHINE & SUPPLY INC.
6803-71 Street
Edmonton, Alberta
T6B 2M5

Phone: 780-450-9757
Fax: 780-450-0298

MILL TEST REPORT

Date: March 27, 2013

HEAT CODE: TQF
Description: Spectacle Product 2-300, 4-150
Material Designation: SA516-70N
NACE: Conforms to Nace MR0175/ISO 15156-2 2009 Annex A & MR0103
Material Supplier: Dillinger Hutte via Edmonton Exchanger
Heat Number: 354638-40930
Work Order: 120688

CHEMICAL COMPOSITION %

C	Mn	P	S	Si	Cr	Mo	Ni	Cu	Sn	Al	B	Nb	V	Ti	N
.171	1.19	.009	.0012	.372	.037	.012	.030	.030	.001	.034	.0001	.000	.000	.002	.0070

MECHANICAL PROPERTIES

Yield Strength (KSI)	Tensile Strength (KSI)	Elongation (%)	Reduction of Area (%)	Hardness (BHN)	Charpy @ - 51°F (FT.LB)	Test Direction	C.E.
51.6	75.8	27	---	151	184, 110, 124 (139)	----	.38

MISCELLANEOUS

Steelmaking Process:
Condition of Material: Normalized @ 1670'F, air cooled.
Grain Size: ASTM Specification A20/ A 20M

5 Blue Process Equipment Ltd. OCT 16 Quality Department

Note: The information contained here is a copy of the information for the raw material provided to Global Machine & Supply Inc. for the above mentioned product.

Original Material: plate
ASTM A516-70N
Global P.O.: 21580
W.O.: 120688

Signed: _____
Quality Assurance Representative

C:\windows\desktop\global\qa mtr

GLOBAL MACHINE & SUPPLY INC.
6803-71 Street
Edmonton, Alberta
T6B 2M5

Phone: 780-450-9757
Fax: 780-450-0298

MILL TEST REPORT

Date: March 12, 2013

Heat Code: TMU
Description: Spectacle Product 4-150
Material Designation: SA516-70N **NACE:** Conforms to Nace MR0175/ISO 15156-2 2009 Annex A & MR0103
Material Supplier: Nippon Steel Corp. via Edmonton Exchanger
Heat Number: G9690-5702702231
Work Order: 120498

CHEMICAL COMPOSITION %

C	Mn	P	S	Si	Cr	Mo	Ni	Cu	CA	B	Nb	V	Ti	N
.15	1.42	.006	.002	.37	.02	.00	.01	.01	.0012	.0000	.010	.00	.00	.0035

MECHANICAL PROPERTIES

Yield Strength (KSI)	Tensile Strength (KSI)	Elongation (%)	Reduction of Area (%)	Hardness (BHN)	Charpy @ -50□F (FTLB)	Test Direction	CE
57	77	25	---	158	218, 197, 201 (205)		.39

MISCELLANEOUS

Steelmaking Process:
Condition of Material: Normalized @ 910'C for 10 minutes.
Grain Size: ASTM Specification A20/A 20M

Note: The information contained here is a copy of the information for the raw material provided to Global Machine & Supply Inc. for the above mentioned product.

Original Material: plate

ASTM A516-70N
Global P.O.: 21548
W.O.: 120498

Signed: _____
Quality Assurance Representative

5 Blue Process Equipment Ltd. OCT 16 2013 Quality Department

C:\windows\desktop\global qa mtr

GLOBAL MACHINE & SUPPLY INC.
6803-71 Street
Edmonton, Alberta
T6B 2M5

Phone: 780-450-9757
Fax: 780-450-0298

MILL TEST REPORT

Date: July 17, 2013

HEAT CODE: UFM
Description: Spectacle Product 6-150, 8-150
Material Designation: SA516-70N
NACE: Conforms to Nace MR0175-2003 & MR0103-2010
Material Supplier: Ilsenburger Grobblech via Canadian Plate Products Ltd.
Heat Number: 283935-74313
Work Order: 114957

CHEMICAL COMPOSITION %

C	Mn	P	S	Si	Cr	Mo	Ni	Cu	SN	B	AL	Nb	V	Ti	N
.15	1.16	.013	.001	.33	.03	.003	.17	.01	---	.0004	.046	.02	.004	.004	.005

MECHANICAL PROPERTIES

Yield Strength (N/mm2)	Tensile Strength (N/mm2)	Elongation (%)	Reduction of Area (%)	Hardness (HBW)	Charpy @ - 51°F (FT>LB)	Test Direction	CE
356	503	26	---	148	105, 129, 96 (110)		.42

MISCELLANEOUS

Steelmaking Process:
Condition of Material: Heat treatment 910'C +/-10'C, soaking time: 30 min/inch., cooled in still air.
Grain Size: ASTM Specification A20/ A 20M

Note: The information contained here is a copy of the information for the raw material provided to Global Machine & Supply Inc. for the above mentioned product.

Original Material: plate

ASTM A516-70N
Global P.O.: 21858
W.O.: 114957

Signed: _____
Quality Assurance Representative

5 Blue Process Equipment Inc. OCT 16 2013 Quality Department

C:\windows\desktop\global qa mtr

GLOBAL MACHINE & SUPPLY INC.
6803-71 Street
Edmonton, Alberta
T6B 2M5

Phone: 780-450-9757
Fax: 780-450-0298

MILL TEST REPORT

Date: June 11, 2013

Heat Code: UET
Description: Bleed Ring 2", 2-300, 2-600; Vent Blind 2-300, 2-600; Spectacle Product 2-150, 2-300, 2-600; Orifice Plate 2-600
Material Designation: ASTM A350/LF2/A105N **NACE:** MR0175-09 & MR0103
Specification: SA51670N
Material Supplier: Ascometal via Ryerson
Heat Number: H6082
Work Order: Stock, 122991, 123047, 122957, 123019, 123379, 123404, 123904, 124013

CHEMICAL COMPOSITION %

C	Mn	P	S	Si	Cr	Mo	Ni	Cu	Cb	Al	N2	V	Ti	B
.165	1.241	.005	.003	.231	.234	.021	.076	.121	.0130	---	---	.045	---	---

MECHANICAL PROPERTIES

Yield Strength (PSI)	Tensile Strength (PSI)	Elongation (%)	Reduction of Area (%)	Hardness (BHN)	Charpy @ -50□F (FTLB)	Test Direction	CE
54999	76981	35.4	71	163	87.9, 92.4, 79.2 (100)		.445

MISCELLANEOUS

Steelmaking Process:
Condition of Material: Normalized @ 1675'F 2.25hrs, air cooled.
Grain Size: 7

Note: The information contained here is a copy of the information for the raw material provided to Global Machine & Supply Inc. for the above mentioned product.

Original Material: bar

ASTM A105/A350LF2
Global P.O.: 21861
W.O.: Stock

Signed: _____
Quality Assurance Representative

5 Blue Process Equipment Inc. OCT 16 2013 Quality Department

C:\windows\desktop\global qa.mir

5Blue
Process Equipment Inc.

RECEIVING INSPECTION REPORT

DATE: SEP 17 2013 PURCHASE ORDER# 1103-80

CUSTOMER/OWNER_____

DESCRIPTION OF MATERIAL:	PLATE	TUBE /PIPE	BAR	FITTINGS	

		YES	NO
1	MATERIALS CORRECT TO PURCHASE ORDER:	✓	
2	MTR SUPPLIED WITH MATERIALS	✓	
3	MTR CHECKED AGAINST PACKING SLIP	✓	
4	MTR CORRECT FOR THIS MATERIAL	✓	
5	IS MATERIALS IN GOOD CONDITION (NO DAMAGE):	✓	
6	IS MATERIAL THE SAME SIZE AND SCHEDULE AS REQUIRED ON THE PURCHASE ORDER:	✓	
7	IS MATERIAL THE CORRECT GRADE AS REQUIRED ON THE PURCHASE ORDER	✓	
8	IS THE MATERIAL LEGIBLY MARKED FROM THE SUPPLIER? THIS MAY BE STAMPED or STENCILED (record Grade. Type, Heat # And any other relevant information)	✓	

5 Blue Process Equipment Inc. SEP 17 2013 Quality Department

NOTE: If any of these inspection steps cannot be completed the inspector shall notify the QS ASAP. The QS shall make out a NCR detailing the discrepancies and the material in question shall be quarantined until a satisfactory solution to the problem can be resolved. This may include rework or sending the material back to the supplier

Inspector :_____ Signature: _____ Date SEP 17 2013

ROSEMARY KUNTZ
SAFETY / MTR
(780) 955-2040E:226

MRC
Global Supplier of Choice®

PACKING LIST

2862744001

Sales Ord
Number 2862744001 **Page** 1
Printed 09/13/13 14:34

Deliver To:	**From:** 73-750	**Customer Purchase Order**
5 BLUE PROCESS EQUIPMENT INC 2303 - 8TH ST NISKU AB T9E 7Z3	NISKU DISTRIBUTION CENTRE 502 - 25 AVE NISKU AB T9E 0K6	P7770-5B1108-80 **Customer Release/Requisition No.** **Ordered by:** ROB MARTIN

Promised - 09/13/13 **Salesman** - AMBER BILLINGS **Ship VIA** - WILL CALL **Terms** - NET 30 DAYS
Shipped - 09/13/13 **Phone** - (780) 469-2779 **Freight Terms** - PREPAID & ALLOW A **Customer Ship No.** - 27679-0000

****CUSTOMER TO PICK UP AT 2:30PM****

CPO Line	Customer Part/Item ID	Quantity Ordered	Backorder	Shipped	U/M	Description	Line No.
	17C10387	1		1	EA	12 150# BLK CS BLIND FLG RF A105N IMP MFG NAME: ULMA HEAT/LOT/SERIAL # 504A2	001

5 Blue Process Equipment Inc.
SEP 17 2013
Quality Department

RECEIVED
13 SEP 2013

THIS IS NOT AN INVOICE. DO NOT PAY FROM THIS DOCUMENT.

RECEIVED BY -

Tubes-	Box/Bag-	Crates-	Pallets-	1	Pieces-	Bundles-	Picked by-	EMS	Checked by-	Staged-	
Order Weight-	95.21	Material Tot-		Freight- $		.00 Other- $	.00	Tax- $	.00	Total- $	.00

CMPACK (Rev 05/09)

CLIENTE / Customer / Client

CCTF CORPORATION (EDMONTON)
5407 - 53 AVENUE NW
EDMONTON, AB T6B 3G2
CANADA

CERTIFICADO DE INSPECCION

Inspection Certificate - Certificat de Réception

DIN EN 10204 / 3.1
ISO 10474 / 3.1

FECHA: Date: 17/10/2012

N.º No. 151852

HOJA: Page: 1

SGI 1922154 SGI 6000236 SGI 6009987

ULMA FORJA, S.COOP.
Bº Zubillaga, 3 - Apdo. 14
20560 OÑATI (Gipuzkoa) SPAIN
Tel.: 34 - 943 780552
Fax: 34 - 943 781808
E-mail: ulma@ulmapiping.com

PRODUCTO / Article - Produit: FLANGES

SU PEDIDO N.º / Your Order No. / Votre Cde. N.º: 4810279-00/S759157706

DE / of. - de: 04/04/2012

Certified acc. PED 97/23/EC+AD2000-W0 by TÜV Rheinland N.º 01 202 E/Q 02 7443

NORMAS APLICABLES / Requirements - Normes Applicables: ASME B16.5-09

MARCA DEL FABRICANTE / Mark of factory / Marque du fabricant

Packing List: 96824

MATERIAL CORRESPONDIENTE / Material Correspondent - Qualité: ASTM/ASME A/SA105N-11

MODO DE FUSION (*) / Steel Making - Elaboration de l'acier: NACE MR0175/ISO15156-2-09 & MR0103-10 Clause 7.2.1.4, Annex A.2 and SSC Region 3. CSA-Z245.12-09 GR248 CAT I -SS (WN & BLIND FLANGES ONLY)

E = Elec. Y = Oxigeno básico

DEPARTAMENTO / Section / Département: QUALITY ASSURANCE

PARTIDA Item Poste	CANTIDAD Quantity Quantité	DESCRIPCION Description Description	OBSERVACIONES Remarks Observations (*)	COLADA N.º Heat No N.º Coulée	RESISTENCIA T.Strength Resist Rupt N/mm2	LIMITE ELAST. Y.Strength 0.2 % N/mm2	ALARGAM. Elongation Allongement Lo: 4 d %	ESTRICCION Red. Area Striction %	RESILIENCIA Impact test Résilience Joules	CHARPY V 10x10mm PROBETA - SPECIMEN MEDIA Average Moyenne	ºC	DUREZA Hardness Dureté HBW
67 7535783	84	BLIND 10 150LB RF A105N	NE	508A2	509	308	28,50	58,80				150 154
149 7530108	15	BLIND 2 150LB RF A105N V03 TAL.3/4 NPT	NE	358V2	517	326	28,50	59,60				155 163
157 7530479	5	BLIND 2 150LB RF A105N V02 TAL.1/2 NPT	NE	358V2	517	326	28,50	59,60				155 163
245 7533667	5	THR 6 300LB RF A105N	NE	246A1	519	317	29,80	56,30				150 157
255 7531346	10	WN 8 600LB XS/80 RTJ A105N	NE	106A0	503	311	28,80	53,00				147 154
259 7535791	40	BLIND 12 150LB RF A105N	NE	504A2	506	309	28,70	58,60				150 154

COMPOSICION QUIMICA - STEEL MAKER'S LADLE ANALYSIS - ANALYSE CHIMIQUE

COLADA N.º Heat No N.º Coulée	C %	Si %	Mn %	P %	S %	Cr %	Ni %	Mo %	Nb %	V %	Cu %	Al %	Ti %	N %	CEq %
106A0	0,190	0,170	0,840	0,015	0,005	0,150	0,130	0,040	0,003	0,007	0,200	0,027	0,000	0,000	0,391
246A1	0,210	0,270	0,870	0,010	0,003	0,090	0,080	0,040	0,001	0,001	0,220	0,031	0,000	0,000	0,401
358V2	0,200	0,212	0,955	0,008	0,004	0,065	0,075	0,012	0,000	0,004	0,090	0,034	0,000	0,000	0,386
504A2	0,205	0,185	0,880	0,015	0,004	0,071	0,087	0,019	0,006	0,005	0,227	0,037	0,000	0,000	0,392
508A2	0,210	0,198	0,870	0,012	0,003	0,053	0,119	0,021	0,183	0,005	0,183	0,036	0,000	0,000	0,391

- Las dimensiones y la condición superficial se hallaron satisfactorias.
- Dimension and surface condition were found acceptable.
- Les dimensions et états de surface sont satisfaisants.

- Los materiales citados cumplen las normas aplicables.
- Manufacturing requirements are satisfied.
- Les normes applicables sont respectées.

EL INSPECTOR
Works Inspector - L'Inspecteur

ULMA FORJA S. COOP.
Dpto. de Garantía de calidad
Quality Assurance Dept.

(*) OBSERVACIONES: Remarks Observations: N_NORMALIZED AT 900 C AND ALLOWED TO COOL IN STILL AIR

Blue Process Equipment Inc. SEP 17 2013 Quality Department

5Blue
Process Equipment Inc.

RECEIVING INSPECTION REPORT

SEP 0 4 2013

DATE: _____ PURCHASE ORDER# 1108-80

CUSTOMER/OWNER_____

DESCRIPTION OF MATERIAL:	PLATE	TUBE /PIPE	BAR	FITTINGS	

Pipe

		YES	NO
1	MATERIALS CORRECT TO PURCHASE ORDER:	✓	
2	MTR SUPPLIED WITH MATERIALS	✓	
3	MTR CHECKED AGAINST PACKING SLIP	✓	
4	MTR CORRECT FOR THIS MATERIAL	✓	
5	IS MATERIALS IN GOOD CONDITION (NO DAMAGE):	✓	
6	IS MATERIAL THE SAME SIZE AND SCHEDULE AS REQUIRED ON THE PURCHASE ORDER:	✓	
7	IS MATERIAL THE CORRECT GRADE AS REQUIRED ON THE PURCHASE ORDER	✓	
8	IS THE MATERIAL LEGIBLY MARKED FROM THE SUPPLIER? THIS MAY BE STAMPED or STENCILED (record Grade, Type, Heat # And any other relevant information)	✓	

5 Blue Process Equipment Inc. Quality Department SEP 0 4 2013

NOTE: If any of these inspection steps cannot be completed the inspector shall notify the QS ASAP. The QS shall make out a NCR detailing the discrepancies and the material in question shall be quarantined until a satisfactory solution to the problem can be resolved. This may include rework or sending the material back to the supplier

SEP 0 4 2013

Inspector :_____ Signature: _____ Date _____

ROSEMARY KUNTZ
SAFETY / MTR
(780) 955-2040E:226

Trans Am
PIPING PRODUCTS LTD.

Shipped Date
Aug 28, 2013

Sold To
5Blue Process Equipment Inc.
303 - 8 Street
Nisku, Ab

T9E 7Z3
Ordered By Rob
Ph# 780 955-2040

Ship To

Customer P.O.#	Job# / Tag#	T/A Sales Order #
P7622-5B1108-80		E13 - 37261

Shipping Instructions	Freight	Date Ordered
DELIVER WED SHIP & B/O PLEASE		Aug 27, 2013

Item	Description	Qty.Ord.	Um	Qty.Ship.	Backorder	Heat #	Mnf
49	1-1/2" CL 300 S/W FLANGE RF XXH BORE A350-LF2 CL 1 MACHINE TO XH MACHINE TO XH BORE	4	EA	-	4		
50	2" CL 300 W/N FLANGE RF XH BORE A350-LF2 CL 1	2	EA	2		12/39812	MFF
51	2" XH SEAMLESS CS PIPE A106 GR B B.E. - S.R.L.	40	FT	40		2304-02929	JVX
52	3/4" SCH 160 SEAMLESS CS PIPE A106 GR B P.E. - S.R.L. (APPROVED MANUFACTURER)	20	FT	21.67		576179	BTL
53	2" XH SEAMLESS CS PIPE A333 GR 6 B.E. - S.R.L.	60	FT	63.96		511773	HV
54	14" STD SEAMLESS CS PIPE A333 GR 6 B.E. - S.R.L.	20	FT	20.69		313328	TPC

Total MTR's Listed 50

Manufacturer's Legend & Alberta CRN #

BEN Benkan Corporation (Benkan)

BKL Thai Benkan Co. Ltd. (BKL)
OA1041.92 Exp. Jun 2014

5 Blue Process Equipment Inc. SEP 04 2013 Quality Department

Continued Next Page

Weight Shipped	Skid	Crate	Sack	Box	Loose	Loose Pipe	Pipe Bundle	Misc.	Trans Am Representative
Lbs.	2	1				1	1		Matthew (Moe) O'Donnell

is a Registered Trademark of
Trans Am Piping Products Ltd.

Packing List / MTR Summary

1711 - 66th. Avenue, Edmonton, Alberta T6P 1Y9
Ph# (780) 440-4567 Fax# (780) 440-1488

2" XH SEAMLESS CS PIPE
A106 GR B B.E. - S.R.L.

PO# P7622-5B1108-80 Item# 51
Heat Number: 2304-02929
Trans Am Piping Products Ltd. - Rev'd By: SB
Shipment/Seq #: S13 - 1440 4

Jiangsu Valin-Xigang Special Steel Co., Ltd.

MILL TEST REPORT

QRD/HLXG-36-007-5

located at: No.1, Kangqiao Road, Xingang Industrial Park, Jingjiang County-level City Economic Development Zone, Taizhou Jiangsu Province, PRC TEL:86-0523-80708666 FAX: 86-0523-80708119

ORIGINAL

ACC.TO EN 10204 3.1

CUSTOMER :	TRANS AM	L/C NO.	3FAHD5-00230	P. O. NO.	PO. C1-13-180	DATE:	2013-4-22
Product	SEAMLESS CARBON STEEL PIPE FOR OIL AND GAS USE.	Spec. No.	ASTM/ ASME A/SA53B, A/SA106B, API 5LB/X42, PSL-2, NACE MR-0175/ISO 15156-2(REGION 3) /MR-0103/SS (CSA Z245.1 GRADE 290 CATEGORY I)	Contract NO. :	32120000146	Sheet No. :	32120000146001-1
Steel Grade	B+B+BN/X42N+290SS	Making Method	HR	Delivery State	N	ORIGIN :	MADE IN CHINA

NO.	Size (NPS)	LENGTH (FT)	Heat No.	Lot No.	PCS	WT (MT)	TOTAL LENGTH (FEET)	BDL	Tensile Test: SampleType/Orientation/Dimension/GL (mm)	Tensile Test: T.S (Rm) PSI	Tensile Test: Y.S3(C1) PSI	Tensile Test: E.L %(A)	Tensile Test: R.R% (Z)	Impact Test 1 (L): Impact Sample Dimension	Impact Test 1 (L): Akv Impact Value 0 ℃	Hardness Test: Hardness Value NACE MR0175/ISO15156-2(REGION 3)/MR-0103 HBW			H.P.T PSI	Duration of Time (S)
1	2" * 0.218"	20	2304-02929	1313040202	125	5.705	2501.64	4	S/L19/50	76270	64670	26.5		L/3.3	58/63/63	191.8	188.4	187	2970	5
2	2" * 0.218"	20	2304-02929	1213040106	222	10.134	4442.91	6	S/L19/50	75255	68295	26.5		L/6	105/136/117	188	186.4	187	2970	5
3	2" * 0.218"	20	2304-02929	1313040201	74	3.378	1480.97	2	S/L19/50	70035	62205	29.0		L/3.3	58/55/58	180.9	182.4	181	2970	5
4																				
5																				

Chemical Composition %

NO.	Composition Type	C	Si	Mn	P	S	Cr	Ni	Cu	Al	Mo	V	Nb	B	Ti	Mn/C	Ca	Bi	$O\times10^{-4}$	$N\times10^{-4}$	$H\times10^{-4}$	CE_{PCM}	CE_{IIW}
1	H	0.13	0.26	1.05	0.006	0.001	0.03	0.005	0.05	0.029	0.003	0.001	0.029	0.0005	0.033	8.08	0.0001	0.00001					0.32
	P	0.12	0.26	1.05	0.009	0.002	0.03	0.007	0.06	0.027	0.001	0.001	0.029	0.0004	0.030	8.75	0.0001	0.00001					0.31
	P	0.12	0.28	1.05	0.008	0.002	0.03	0.010	0.06	0.029	0.002	0.002	0.030	0.0005	0.031	8.75	0.0001	0.00001					0.31
2	H	0.13	0.26	1.05	0.006	0.001	0.03	0.005	0.05	0.029	0.003	0.001	0.029	0.0005	0.033	8.08	0.0001	0.00001					0.32
	P	0.11	0.27	1.05	0.010	0.003	0.03	0.008	0.07	0.026	0.002	0.001	0.028	0.0005	0.029	9.55	0.0001	0.00001					0.30
	P	0.12	0.26	1.05	0.009	0.002	0.03	0.009	0.07	0.026	0.002	0.002	0.028	0.0005	0.029	8.83	0.0002	0.00001					0.31
3	H	0.13	0.26	1.05	0.006	0.001	0.03	0.005	0.05	0.029	0.003	0.001	0.029	0.0005	0.033	8.08	0.0001	0.00001					0.32
	P	0.12	0.25	1.06	0.007	0.002	0.03	0.006	0.05	0.030	0.001	0.002	0.029	0.0005	0.032	8.83	0.0001	0.00001					0.31
	P	0.12	0.27	1.06	0.007	0.001	0.03	0.011	0.05	0.035	0.002	0.002	0.031	0.0005	0.033	8.83	0.0001	0.00001					0.31
4	H																						
	P																						
	P																						
5	H																						
	P																						
	P																						

Total Bundles	Total Pieces	TOTAL LENGTH (FEET)	Total Weight (t)	Order Quantity	Thread Test	Drift Test	Coating	non-destructive inspection				
12	421	8425.52	19.218				conformity	PIPE BODY		PIPE END	Flatten	COLD BENDING TEST
								ET	L2			ok
Surface&Dimension		Pipe End (PE, BE)		SSC	HIC		resistance to CO_2	Grain Size		Thread Type (STC、LC、BT、NU、EU)		PSL(PSL1、PSL2、PSL3)
conformity		BE		OK								PSL2

Notes	1-Sample Orientation:T= transy ,L= length direction. 2-Tensile Sample Type:S=Strip, F= Full-section , B=bar-shaped. 3-Yield Strength Selection: C1=Rt0.5, C2=Rt0.6, C3=Rt0.65, C3=Rt0.7。4-Impact Sample Dimension:D1=10×10×55mm, D2=10×7.5×55mm, D3=10×6.7×55mm , D4=10×5×55mm. 5- Composition Type: R-Melting Composition。C- Product Composition。CE_{IIW}=C+Mn/6+(Cr+Mo+V)/5+(Cu+Ni)/15 CE_{PCM}=C+Si/30+(Mn+Cr+Cu)/20+Ni/60+Mo/15+V/10+5*B GL- Gauge Length。N—NORMALIZING Q—QUENCHING HR--HOT ROLLED Q&T—QUENCHING AND TEMPERING N&T—NORMALIZING AND TEMPERING
Remarks	1.WE HERE CERTIFY THAT THE PRODUCTS HEREIN DESCRIBED HAS BEEN MANUFACTURE、SAMPLED TESTED AND INSPECTED IN ACCORDANCE WITH THE REQUIREMENT AND PURCHASE ORDER, AND MEET THE REQUIREMENT. TO BE RELEASED. 2.ALL PIPES BE MADE FREE OF RADIATION CONTAMINATION . 3、The Mtcs Are Issued In Duplicate. 4.FULLY KILLED. 5.IT HAS BEEN NO WELD REPAIR. 6.IT HAS BEEN NO WELD REPAIR. Original For Customer Use Only. Duplicate On File Only.

Remarks: No duplicate will be accepted

Certification-maker: 王艳红

Auditor:

Quality Manager:

JIANGSU VALIN-XIGANG SPECIAL STEEL CO., LTD

Valin Process Equipment Mfg. Inc. SEP 0 1 2013 Quality Department

3/4" SCH 160 SEAMLESS CS PIPE
A106 GR B P.E. - S.R.L.
(APPROVED MANUFACTURER)

PO# P7622-5B1108-80 Item# 52
Heat Number: 576179
Trans Am Piping Products Ltd.
Shipment/Seq #: S13 - 1331 - Rev'd By: SB 6

Benteler Steel/Tube GmbH
Postfach 13 40
33043 Paderborn
Deutschland
Tel.: +49.5254.81-0 Fax: +49.5254.13666

BENTELER
Steel/Tube

ABNAHMEPRÜFZEUGNIS EN 10204-3.1

INSPECTION CERTIFICATE EN 10204-3.1
CERTIFICAT DE RECEPTION EN 10204-3.1
EN 10204:2005-01

Benteler Steel/Tube GmbH - Postfach 1340 - 33043 Paderborn - Deutschland

Trans Am Piping Products Ltd.
1711 - 66th Avenue
EDMONTON AB T6P 1Y9
CANADA

Dokument-Nr.: **Document No.:** No. du document:	41-741445/002/P	Prüf-Nr.: **Inspection No.:** No. du certificat:	Blatt: 1 / 8 **Page:** Page:
Kunden-Bestell-Nr.: **Purchase Order No.:** No. de commande du client:	BST 12-5650 / Trans Am CI-12-679	Hersteller: **Manufacturer:** Producteur:	Warmrohrwerk/Zieherei [DIN EN ISO 9001, ISO/TS-16949 CERTIFIED BY TUEV NORD CERT] [PED 97/23/EC CERTIFIED BY TUEV NORD SYSTEMS]
Benteler Auftrags-Nr.: **Benteler Order No.:** No. de commande Benteler:	1582779	Herstellerzeichen: **Manufacturer's brand:** Marque du producteur:	
Versandanzeigen-Nr.: **Dispatch Note No.:** No. d'avis d'expédition:	4135271	Stempel des Abnahmebeauftragten: **Stamp of the inspection representative:** Poinçon du contrôleur:	WA
Produkt: **Product:** Produit:	NAHTLOSE STAHLROHRE SEAMLESS STEEL TUBES TUBES D' ACIER SANS SOUDURE	Stahlerschmelzungsverfahren: **Steelmaking process:** Procédé d'élaboration de l'acier:	ELEKTROSTAHL ELECTRIC FURNACE FOUR ELECTRIQUE

Lieferbedingungen: **Terms of delivery:** Conditions de livraison:	ASME SA-106, ASME Section II Part A Edition 2010 Addenda 2011a, S6, ASTM-A 106-2011, S6, API Specification 5L Forty-Fourth Edition, October 2007, ISO 3183:2007, PSL 1, incl. ADDENDUM 3, CSA Standard Z245.1-07 Category I, Sour Service, ANSI/NACE MR0175/ISO 15156-1: 2009, ANSI/NACE MR0175/ISO 15156-2: 2009
Maße - Toleranzen: **Dimensions-tolerances:** Dimensions-tolérances:	ASME SA-530, ASME Section II Part A Edition 2010 Addenda 2011a, ASTM-A 530-2004a
Stahlsorte: **Steel grade:** Nuance d'acier:	GRADE 290, GRADE B, GRADE X 42
Lieferzustand: **Delivery condition:** État de livraison:	Hot rolled
Produktkennzeichnung: **Product marking:** Marquage du produit:	see attachment product marking

Blue Process Equipment Inc. SEP 04 2013 Quality Department

Pos. Item Poste	Stück Number Nombre	Maße Dimensions Dimensions	Länge Length Longueur feet	Gewicht Weight Poids lbs	Schmelzen-Nr. Heat No. No. de coulée	Prüfdruck Test pressure Pression d'épreuve PSI	s	Rohr-Nr.-Gruppe Tube number group Série de no. des tubes	Vielfachlängen Multiple lengths Longueurs multiples
0001	235	1 1/4" NPS * Sched. 40 20 FT - 22 FT	5011,48	11797	576180	3000	5		

Benteler Steel/Tube GmbH
Postfach 13 40
33043 Paderborn
Deutschland
Tel.: +49.5254.81-0 Fax: +49.5254.13666

BENTELER
Steel/Tube

ABNAHMEPRÜFZEUGNIS EN 10204-3.1
INSPECTION CERTIFICATE EN 10204-3.1
CERTIFICAT DE RECEPTION EN 10204-3.1

Dokument-Nr.: / **Document No.:** / No. du document: 41-741445/002/P

Prüf-Nr.: / **Inspection No.:** / No. du certificat:

Pos. / Item / Poste	Stück / Number / Nombre	Maße / Dimensions / Dimensions	Länge / Length / Longueur feet	Gewicht / Weight / Poids lbs	Schmelzen-Nr. / Heat No. / No. de coulée	Prüfdruck / Test pressure / Pression d'épreuve PSI	s	Rohr-Nr.-Gruppe / Tube number group / Série de no. des tubes	Vielfachlänge / Multiple lengths / Longueurs multip
0002	195	1 1/2" NPS * Sched. 40 20 FT - 22 FT	4254,43	12192	576363	3000	5		
0003	199	1/2" NPS * Sched. 80 20 FT - 22 FT	4304,46	4674	576179	3000	5		
0004	148	3/4" NPS * Sched. 80 20 FT - 22 FT	3146,46	4663	576179	3000	5		
0005	105	1" NPS * Sched. 80 20 FT - 22 FT	2184,06	4696	576179	3000	5		
0008	110	3/4" NPS * Sched. 160 20 FT - 22 FT	2381,89	4718	576179	3000	5		
0009	187	1" NPS * Sched. 160 20 FT - 22 FT	4049,21	11718	576179	3000	5		

Schmelzenanalyse [%] / **Heat analysis [%]** / Analyse sur coulée [%]

Pos. / Item / Poste	Schmelzen-Nr. / Heat No. / No. de coulée	C	SI	MN	P	S	CR	MO	NI	CU	V	NB	TI	B
0001	576180	0,140	0,210	0,75	0,009	0,002	0,15	0,04	0,07	0,10	0,002	0,011	0,002	0,0002
0002	576363	0,140	0,180	0,75	0,015	0,002	0,14	0,03	0,09	0,13	0,002	0,012	0,001	0,0002
0003	576179	0,130	0,190	0,74	0,007	0,001	0,12	0,07	0,08	0,09	0,001	0,010	0,001	0,0002
0004	576179	0,130	0,190	0,74	0,007	0,001	0,12	0,07	0,08	0,09	0,001	0,010	0,001	0,0002
0005	576179	0,130	0,190	0,74	0,007	0,001	0,12	0,07	0,08	0,09	0,001	0,010	0,001	0,0002
0008	576179	0,130	0,190	0,74	0,007	0,001	0,12	0,07	0,08	0,09	0,001	0,010	0,001	0,0002
0009	576179	0,130	0,190	0,74	0,007	0,001	0,12	0,07	0,08	0,09	0,001	0,010	0,001	0,0002



Benteler Steel/Tube GmbH
Postfach 13 40
33043 Paderborn
Deutschland
Tel.: +49.5254.81-0 Fax: +49.5254.13666

BENTELER
Steel/Tube

ABNAHMEPRÜFZEUGNIS EN 10204-3.1
INSPECTION CERTIFICATE EN 10204-3.1
CERTIFICAT DE RECEPTION EN 10204-3.1

Dokument-Nr.: **Document No.:** No. du document: 41-741445/002/P

Prüf-Nr.: **Inspection No.:** No. du certificat:

1. Formel: CE IIW = C + (Mn/6) + ((Cr + Mo + V)/5) + ((Cu + Ni)/15) < = 0,40 %
2. Formel: CEV = C + F*((Mn/6) + (Si/24) + (Cu/15) + (Ni/20) + ((Cr + Mo + V + Nb)/5) + (5*B)) < = 0,40
3. Formel: Mn/C > = 3/1
4. Formel: Cr + Cu + Mo + Ni + V < = 1,00 %

Formelergebnisse / **Formula results** / Résultats des formules

Pos. **Item** Poste	Schmelzen-Nr **Heat No.** No. de coulée	1. Formel **1. Formula** 1. Formule	2. Formel **2. Formula** 2. Formule	3. Formel **3. Formula** 3. Formule	4. Formel **4. Formula** 4. Formule
0001	576180	0,315	0,298	5,357	0,362
0002	576363	0,314	0,296	5,357	0,392
0003	576179	0,303	0,276	5,692	0,361
0004	576179	0,303	0,276	5,692	0,361
0005	576179	0,303	0,276	5,692	0,361
0008	576179	0,303	0,276	5,692	0,361
0009	576179	0,303	0,276	5,692	0,361

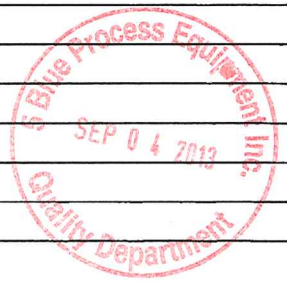

Produktanalyse [%] / **Product analysis [%]** / Analyse sur produit [%]

Pos. **Item** Poste	Schmelzen-Nr. **Heat No.** No. de coulée	C	SI	MN	P	S	CR	MO	NI	CU	V	NB	TI	B
0001	576180	0,130	0,200	0,71	0,007	0,002	0,15	0,04	0,06	0,10	0,001	0,012	0,002	0,0001
0001	576180	0,140	0,210	0,71	0,007	0,002	0,15	0,04	0,06	0,10	0,001	0,012	0,002	0,0001
0002	576363	0,150	0,180	0,75	0,012	0,001	0,15	0,03	0,08	0,13	0,001	0,014	0,001	0,0002
0002	576363	0,140	0,170	0,75	0,012	0,001	0,15	0,03	0,08	0,13	0,001	0,014	0,001	0,0002
0003	576179	0,130	0,180	0,72	0,005	0,001	0,13	0,06	0,07	0,08	0,001	0,013	0,001	0,0002
0003	576179	0,130	0,180	0,72	0,005	0,001	0,13	0,06	0,07	0,08	0,001	0,013	0,001	0,0002
0004	576179	0,130	0,180	0,72	0,005	0,001	0,13	0,06	0,07	0,08	0,001	0,013	0,001	0,0002
0004	576179	0,130	0,180	0,72	0,005	0,001	0,13	0,06	0,07	0,08	0,001	0,013	0,001	0,0002
0005	576179	0,130	0,180	0,72	0,005	0,001	0,13	0,06	0,07	0,08	0,001	0,013	0,001	0,0002
0005	576179	0,130	0,180	0,72	0,005	0,001	0,13	0,06	0,07	0,08	0,001	0,013	0,001	0,0002

Benteler Steel/Tube GmbH
Postfach 13 40
33043 Paderborn
Deutschland
Tel.: +49.5254.81-0 Fax: +49.5254.13666

BENTELER
Steel/Tube

ABNAHMEPRÜFZEUGNIS EN 10204-3.1
INSPECTION CERTIFICATE EN 10204-3.1
CERTIFICAT DE RECEPTION EN 10204-3.1

Dokument-Nr.: **Document No.:** No. du document: 41-741445/002/P

Prüf-Nr.: **Inspection No.:** No. du certificat:

Produktanalyse [%] / **Product analysis [%]** / Analyse sur produit [%]

Pos. / **Item** / Poste	Schmelzen-Nr. / **Heat No.** / No. de coulée	C	SI	MN	P	S	CR	MO	NI	CU	V	NB	TI	B
0008	576179	0,130	0,180	0,72	0,005	0,001	0,13	0,06	0,07	0,08	0,001	0,013	0,001	0,0002
0008	576179	0,130	0,180	0,72	0,005	0,001	0,13	0,06	0,07	0,08	0,001	0,013	0,001	0,0002
0009	576179	0,130	0,180	0,72	0,005	0,001	0,13	0,06	0,07	0,08	0,001	0,013	0,001	0,0002
0009	576179	0,130	0,180	0,72	0,005	0,001	0,13	0,06	0,07	0,08	0,001	0,013	0,001	0,0002

1. Formel: $CE\ IIW = C + (Mn/6) + ((Cr + Mo + V)/5) + ((Cu + Ni)/15) <= 0{,}40\ \%$
2. Formel: $CEV = C + F*((Mn/6) + (Si/24) + (Cu/15) + (Ni/20) + ((Cr + Mo + V + Nb)/5) + (5*B)) <= 0{,}40$
3. Formel: $Mn/C >= 3/1$
4. Formel: $Cr + Cu + Mo + Ni + V <= 1{,}00\ \%$

Formelergebnisse / **Formula results** / Résultats des formules

Pos. / **Item** / Poste	Schmelzen-Nr / **Heat No.** / No. de coulée	1. Formel / **1. Formula** / 1. Formule	2. Formel / **2. Formula** / 2. Formule	3. Formel / **3. Formula** / 3. Formule	4. Formel / **4. Formula** / 4. Formule
0001	576180	0,297	0,272	5,461	0,351
0001	576180	0,307	0,291	5,071	0,351
0002	576363	0,325	0,313	5,000	0,391
0002	576363	0,315	0,297	5,357	0,391
0003	576179	0,298	0,273	5,538	0,341
0003	576179	0,298	0,273	5,538	0,341
0004	576179	0,298	0,273	5,538	0,341
0004	576179	0,298	0,273	5,538	0,341
0005	576179	0,298	0,273	5,538	0,341
0005	576179	0,298	0,273	5,538	0,341
0008	576179	0,298	0,273	5,538	0,341
0008	576179	0,298	0,273	5,538	0,341
0009	576179	0,298	0,273	5,538	0,341
0009	576179	0,298	0,273	5,538	0,341

Blue Process Equipment Inc.
SEP 0 4 2013
Quality Department

Benteler Steel/Tube GmbH
Postfach 13 40
33043 Paderborn
Deutschland
Tel.: +49.5254.81-0 Fax: +49.5254.13666

BENTELER
Steel/Tube

ABNAHMEPRÜFZEUGNIS EN 10204-3.1
INSPECTION CERTIFICATE EN 10204-3.1
CERTIFICAT DE RECEPTION EN 10204-3.1

Dokument-Nr.: **Document No.:** No. du document: 41-741445/002/P

Prüf-Nr.: **Inspection No.:** No. du certificat:

Prüfergebnisse / Test results / Résultats des essais

Die Rohre sind auf Dichtheit geprüft durch: **The tubes have been submitted to a leak tightness test by:** Les tubes ont passé un contrôle d'étanchéité par:	Hydrostatic test: acc. to CSA Z245.1, holding time min 5 seconds, Test pressure/Time-record	PASSED
Die Rohre wurden zerstörungsfrei geprüft: **The tubes are non destructive tested:** Les tubes ont passé un essai non destructif:	ET-test: acc. to CSA Z245.1; for imperfections; drilled hole: 3,20 mm	PASSED

Augensichtkontrolle: **Visual inspection:** Examen visuel:	PASSED	Biegeversuch: **Bending test:** Essai de cintrage:	PASSED	Maßkontrolle: **Dimensions examination:** Vérification des dimensions:	PASSED

Ergebnisse der mechanischen Prüfung / Results of mechanical testing / Résultats des essais mécaniques

Die Probennahme erfolgte an Vielfachlängen.
The sampling was carried out on multiple lengths.
L'echantillonage etait realise aux longueurs multiples.

Zugversuch längs Vollprobe / Tensile test longitudinal Full section test specimen / Essai de traction longitudinale Eprouvette a section complete

Pos. Item Poste	Proben-Nr. Specimen No. No. de l'éprouvette	Schmelzen-Nr. Heat No. No. de coulée	Probenabmessung Specimen dimensions Dimensions de l'éprouv.	Streckgrenze Yield strength Limite élastique	Zugfestigkeit Tensile strength Résistance à la traction	Dehnung Elongation Allongement		Einschnürung Area reduction Coefficient de striction
Anforderungen Requirements Exigences			mm	ReH N/mm² MIN 290	Rm N/mm² 415-625	A2" % MIN 30	1. Formel 1. Formula 1. Formule	
0001	000001	576180	42,40 X 3,50	402	524	52,00		
0003	000001	576179	21,30 X 3,70	392	510	42,00		
0005	000001	576179	33,45 X 4,55	366	497	46,00		
0008	000001	576179	26,75 X 5,55	352	490	48,00		
0009	000001	576179	33,35 X 6,70	324	466	50,00		

5 Blue Process Equipment Inc.
SEP 04 2013
Quality Department

Benteler Steel/Tube GmbH
Postfach 13 40
33043 Paderborn
Deutschland
Tel.: +49.5254.81-0 Fax: +49.5254.13666

BENTELER
Steel/Tube

ABNAHMEPRÜFZEUGNIS EN 10204-3.1
INSPECTION CERTIFICATE EN 10204-3.1
CERTIFICAT DE RECEPTION EN 10204-3.1

Dokument-Nr.: 41-741445/002/P
Document No.:
No. du document:

Prüf-Nr.:
Inspection No.:
No. du certificat:

Zugversuch längs Gewicht und Länge / **Tensile test longitudinal Weight and length** / Essai de traction longitudinale Poids et longueur

Pos. / **Item** / Poste	Proben-Nr. / **Specimen No.** / No. de l'éprouvette	Schmelzen-Nr. / **Heat No.** / No. de coulée	Probenabmessung / **Specimen dimensions** / Dimensions de l'éprouv.		Streckgrenze / **Yield strength** / Limite élastique	Zugfestigkeit / **Tensile strength** / Résistance à la traction	Dehnung / **Elongation** / Allongement		Einschnürung / **Area reduction** / Coefficient de striction
Anforderungen / **Requirements** / Exigences			g	mm	ReH N/mm² MIN 290	Rm N/mm² 415-625	A2" % MIN 30	1. Formel **1. Formula** 1. Formule	
0002	000001	576363	1.758,50	417	393	500	60,00		
0004	000001	576179	918,20	402	386	504	48,00		

Härteprüfung / **Hardness test** / Essai de dureté

Pos. / **Item** / Poste	Proben-Nr. / **Specimen No.** / No. de l'éprouv.	Schmelzen-Nr. / **Heat No.** / No. de coulée	Härte / **Hardness** / Dureté				
Anforderungen / **Requirements** / Exigences			HRC	HB MAX 200	HV	HRB	HBW
0001	000001	576180		160			
0002	000001	576363		148			
0003	000001	576179		144			
0004	000001	576179		148			
0005	000001	576179		144			
0008	000001	576179		144			
0009	000001	576179		139			

Restmagnetismus / **Demagnetize** / Démagnétiser

Pos. / **Item** / Poste: 0001, 0008, 0009, 0002, 0004, 0005, 0003, 0009, 0008, 0002, 0004, 0005, 0003
demagnetized tubes; 1 measurement per 4 hours on both tube ends Two readings 180° apart around the circumference. Average value max 3.0 Millitesla (24 A/cm), individual value max 3.5 Millitesla (28 A/cm)

Blue Process Equipment Inc.
SEP 04 2013
Quality Department

Benteler Steel/Tube GmbH
Postfach 13 40
33043 Paderborn
Deutschland
Tel.: +49.5254.81-0 Fax: +49.5254.13666

BENTELER
Steel/Tube

ABNAHMEPRÜFZEUGNIS EN 10204-3.1
INSPECTION CERTIFICATE EN 10204-3.1
CERTIFICAT DE RECEPTION EN 10204-3.1

Dokument-Nr.: **Document No.:** No. du document: 41-741445/002/P

Prüf-Nr.: **Inspection No.:** No. du certificat:

Vermerk / **Remark** / Remarque

Pos. / **Item** / Poste: 0001, 0003, 0008, 0004, 0003, 0008, 0005, 0009, 0002, 0009, 0004, 0003, 0004, 0003, 0009, 0005, 0002, 0008, 0009, 0003, 0002, 0003 0004, 0005, 0008, 0004, 0008, 0003, 0009, 0005, 0002, 0009, 0003, 00
NACE Standard: Hardness acc. to ANSI/NACE MR0175/ISO 15156: HRC max 22., The material meets the requirements of NACE MR0103, Region 3, in accordance to Figure 1 and Appendix A.2, ANSI/NACE MR0175/ISO 15156-2:2009; Certificate remarks: The Material is Aluminium deoxydized and inclusion shape controlled with Calcium-Silicon treatment, It is the end user's responsibility to ensure that all environmental requirements as well as the requirements regarding engineering, construction and operation of facilities are fulfilled in the country of use. Fit for purpose of the parts as well as homologation is not the scope of this contract., This is to confirm that the seamless linepipe supplied by Benteler and verified to CSA Standard Z245.1-07 meets the requirement for micro hardness of max. 248 HV 500 gf., No weld repair has been carried out; Bend test: mandrel diameter 12D; Bending angle: 90 °

Pos. / **Item** / Poste: 0001, 0002, 0005, 0004, 0008, 0003, 0009, 0004, 0008, 0009, 0005, 0002, 0003
Grain size: acc. to ASTM-E 112: Item 001 = 10, Item 002 = 10, Item 003 = 10-13, Item 004 = 11, Item 005 = 10, Item 008 = 10, Item 009 = 10; Grain size and finer: 6

Beiblatt Produktkennzeichnung / **Attachment product marking** / Supplément marquage du produit

Pos. / **Item** / Poste	Produktkennzeichnung / **Produktkennzeichnung** / Marquage du produit	
0001	FS:	BENTELER Z.245.1-07 - ISO 3183 - A 106-S6 - SA-106-S6 Spec 5L-0151.1 API SIGN 0113 PSL1 B/X42/290 SS HEAT-NO. TEST PRESSURE NDE DIMENSIONS WA GERMANY P.O. CI-12-679
	PS:	HEAT-NO. DIMENSIONS SCHEDULE B/X42/290 SS
0002, 0003, 0004, 0005, 0008, 0009	FS:	BENTELER Z.245.1-07 - ISO 3183 - A 106-S6 - SA-106-S6 Spec 5L-0151.1 API SIGN 0213 PSL1 B/X42/290 SS HEAT-NO. TEST PRESSURE NDE DIMENSIONS WA GERMANY P.O. CI-12-679
	PS:	HEAT-NO. DIMENSIONS SCHEDULE B/X42/290 SS

AEZ = Ätztintenbeschriftung, Etching ink marking, Gravure à l'encre . FK = Farbkennzeichnung, colour marking, marquage par couleur . FS = Farbschablonierung, paint stencilling, marquage par peinture . FSD = Farbstrahldrucker, Colour jet printer, Imprimante à jet d'encre couleur . LK = Laserkennzeichnung, Laser marking, Marquage laser . PKE = Etikettenkennzeichnung, tag marking, marquage sur étiquette . PS = Prägestempel, die stamp, marquage par poinçonnage . TS = Tintenstrahlkennzeichnung, Ink jet spray marking, imprimante à jet d'encre .

Verkäufer(in) / **Salesman/ woman in charge** / Personne chargée : Mrs Schöneweis, Tel.: 05254 81-204234, Fax: 204289

5 Blue Process Equipment Inc. SEP 04 2013 Quality Department

Benteler Steel/Tube GmbH
Postfach 13 40
33043 Paderborn
Deutschland
Tel.: +49.5254.81-0 Fax: +49.5254.13666

BENTELER
Steel/Tube

ABNAHMEPRÜFZEUGNIS EN 10204-3.1
INSPECTION CERTIFICATE EN 10204-3.1
CERTIFICAT DE RECEPTION EN 10204-3.1

Dokument-Nr.:	41-741445/002/P	Prüf-Nr.:		Blatt:	8 / 8
Document No.:		**Inspection No.:**		**Page:**	
No. du document:		No. du certificat:		Page:	

5 Blue Process Equipment Inc.
SEP 0 4 2013
Quality Department

Paderborn Schloß Neuhaus, 18.03.2013, TEL.: 05254.81-201767 FAX: 05254.81-201752

Abnahmebeauftragter
Inspection representative
Contrôleur
THOMAS GOLLAN / TEM

Es wird bestätigt, daß die gelieferten Erzeugnisse den techn. Lieferbedingungen des Auftrages entsprechen.Dieses Dokument wurde mittels EDV erstellt und ist ohne Unterschrift rechtsgültig.
We certify that the supplied products comply with the order specification.This document was prepared by means of electronic data processing and is valid without signature.
Nous attestons que les produits livrés sont conformes aux stipulations de la commande.Ce document a été établi par traitement électronique de l'information et est valide sans signature.

2" XH SEAMLESS STEEL PIPE
A333 GR 6 B.E.(S.R.L.)

PO# P7622-5B1108-80 Item# 53
Heat Number: 511773
Trans Am Piping Products Ltd. - Rev'd By: SB
Shipment/Seq #: S12 - 1513 1

Contract No.: CI-12-187
PO.NO.: CI-12-187
Name of Customer: TRANS AM PIPING PRODUCTS LTD.,
L/C NO.:
Description: Seamless Steel Line Pipe

HENGYANG VALIN STEEL TUBE CO.,LTD

MILL INSPECTION CERTIFICATE

Date: MAY 08,2012
Page: 1/1

Add: 10 Dalixincun, Hengyang City, Hunan, China
Tel and Fax: +86 734 8873739 8872942
Cable: 6993
P.C. 421001

SPEC:ASTM/ASME A/SA 333-2011,NACE MR 0175-2009/ISO 15156-2:2009 — CERTIFICATE NO:12-1-05-31

NO.	BATCH NO.	HEAT NO.	STEEL GRADE	SIZE	BUNDLES	PIECES	FEETS	QUANTITY (MT)	ACTUAL WEIGHT(MT)
1	12-A5812	511773	Gr. 6	2" XS A333 GR 6 B.E. SRL					

NO.	DELIVERY CONDITION(≥650℃)	NONDESTRUCTIVE TEST ET	NONDESTRUCTIVE TEST UT		C.	Si	Mn	P	S	Cu	Ni	Cr	Mo	V	Ti	B	NB	CE
					CHEMICAL COMPOSITION % (L:Ladle analysis P:Product analysis)													
1	NORMALIZED	OK		L	0.14	0.25	1.06	0.007	0.003	0.07	0.03	0.04	0.01	0.03	0	0.0003	0	0.34
				P	0.15	0.25	1.06	0.008	0.002	0.08	0.02	0.04	0.01	0.03	0	0.0003	0	0.35
				P	0.15	0.25	1.06	0.008	0.002	0.08	0.02	0.04	0.01	0.03	0	0.0003	0	0.35

NO.	T.S. (MPA)	Y.S. (MPA)	E.L. (%)		Ak (J) IMPACT (-45℃) SIZE	1	2	3	AVG.	HARDNESS BRINNEL (HB)	HYDROSTATIC TEST (MPA)	FLATTEN TEST	BEND TEST
	Strip,L,bo=19mm,Lo=50mm												
1	510	365	37.5	L	10X5	18	21	20	20	162	17.0	OK	OK

REMARKS: 1.We hereby certify that this certificate of quality is issued and signed by the manufacture.
2. We hereby certify that the properties described herein meet the requirement of the above spec.
3. We hereby certify that this certificate is issued accordance with EN 10204 3.1B
4. SPECIMEN SIZE: (Pipe end, Longitudinal, Gauge Length=2")
A.For pipes≤1" full length specimen were used;
B.For pipes>1" longitudinal strip specimen were used; the width of the gauge length portion is 3/4"
5.HEAT TREATMENT CONDITION FOR PIPE NORMALIZED:900℃ X 10MIN
6.Impact Test :L=Longitudinal
7.DIMENSION STANDARD:ASME B36.10
8.MANUFACTURE METHOD:COLD DRAWN
9.CE=C+Mn/6+(Cr+Mo+V)/5+(Cu+Ni)/15

QUALITY MANAGER

HENG YANG VALIN STEEL TUBE CO., LTD. 衡阳华菱钢管有限公司 HUNAN CHINA

5 Blue Process Equipment Inc. SEP 04 2013 Quality Department

PO# P7622-5B1108-80 Item# 54
Heat Number: 313328
Trans Am Piping Products Ltd.
Shipment/Seq #: S12 - 1033 - 2
Rev'd By: SB
14" STD SEAMLESS STEEL PIPE
A333 GR 6 B.E.(S.R.L.)

ADD:JINTANG ROAD DONGLI
DISTRICT,TIANJIN,CHINA
TEL:86-22-24801139
FAX:86-22-24801291

TIANJIN PIPE(GROUP)CORPORATION
QUALITY CERTIFICATE
(EN10204 3.1)

Licence No.:
No.: C138923691253

Contract No.	2011SSG-CI-11-569	L/C No.		O.D.×W.T.	14"STD(355.6x9.53mm)	Packing	IN LOOSE
Order	Trans Am Piping Products Ltd.,	Product	Seamless Steel Line Pipe	Steel grade	Gr. 6	Total pieces	
P.O.No.	CI-11-569	Port of desti.		Man. Method	HOT ROLLING SEAMLESS	Total metres	
Standard	ASTM/ASME A/SA 333-2011			Length range	SRL	Total weight	

Heat No.	Lot No.	Quantity Pieces	Meters	Bundles	Tons	Delivery condition	Sample No.	Tensile test(Mpa) 1*	Tem. ℃	T.S.	Type	Y.S.	Elong. %	Shrink %	2*	Tem. ℃	Size	Impact test(J) AK1	shear %	AK2	shear %	AK3	shear %	AVE	shear %
313328	130					Normalized	130-11-1783	A	26	575	Rt0.5	420	40.0		A	-48℃	10X7.5	48		46		45		46	
Total							Note:	A:strip,L,bo=38.1mm,Lo=50mm							A:V/L,B:V/T										

Heat No.	Lot No.	Sample No.	Hardness Brinnel	Hardness Brinnel(HB)(inside) 1	2	3	4	AVE	Hardness Brinnel(HB)(middle) 1	2	3	4	AVE	Hardness Brinnel(HB)(outside) 1	2	3	4	AVE	NDE	Fla. test(1)	Fla. test(2)
313328	130	130-11-1783		166	167	167	167	167	167	167	167	168	167	168	168	167	167	168	EMI/L4	G	G

Heat No.		Chemical composition%(L:Ladle analysis P:Product analysis) C	Si	Mn	P	S	Ni	Cr	Mo	Cu	V	B	Ti	Nb	Ca	CE(IIW)	Hydro.Test (Psi/s)
313328	L	0.16	0.38	1.16	0.013	0.009	0.05	0.04	0.01	0.11	0.01	0	0	0	0.0005	0.38	1145/5
A333 GR 6	P	0.16	0.39	1.15	0.012	0.008	0.04	0.04	0.01	0.10	0.01	0	0	0	0.0004	0.37	
	P	0.16	0.39	1.15	0.012	0.008	0.04	0.04	0.01	0.10	0.01	0	0	0	0.0004	0.37	
	L																
	P																
	P																
	L																
	P																
	P																

NDE(100%)	Visual and dimension	Hydro.Test	Pipe end NDE	Pipe end bevelling	Residual mag. Test	SSCC	HIC
G	G	G	G	G	G		

We hereby state that all pipes are manufactured and tested and inspected according to above standards and order. Certification.

Note: 1.NACE MR 0175-2009/ISO 15156-2:2009; 2.CE II W=C+Mn/6+(Cr+Mo+V)/5+(Cu+Ni)/15; 3.The pipe is produced from "fully killed" steel; 4.Silicon and calcium treated for inclusion morphology control in Steel Melting; Billet produced by TPCO; 5. Heat Treatment Condition For Pipe Normalized:900℃ X 10MIN;

No. C138923691253 Date
Page (1) 2011-11-29

Remark:desti.=destination;tem.=temperature;speci.=specification;Man.=Manufacture;Fla.=Flattening;G=Good;Hydro.=Hydrostatic;Mag.=Magnetic

Blue Process Equipment Inc. Quality Department

5Blue
Process Equipment Inc.

RECEIVING INSPECTION REPORT

DATE: OCT 1 8 2013 **PURCHASE ORDER#** 1108-11

CUSTOMER/OWNER_____ Angle/Flat/Round

DESCRIPTION OF MATERIAL:	PLATE	TUBE /PIPE	BAR	FITTINGS	

		YES	NO
1	MATERIALS CORRECT TO PURCHASE ORDER:	✓	
2	MTR SUPPLIED WITH MATERIALS	✓	
3	MTR CHECKED AGAINST PACKING SLIP	✓	
4	MTR CORRECT FOR THIS MATERIAL	✓	
5	IS MATERIALS IN GOOD CONDITION (NO DAMAGE):	✓	
6	IS MATERIAL THE SAME SIZE AND SCHEDULE AS REQUIRED ON THE PURCHASE ORDER:	✓	
7	IS MATERIAL THE CORRECT GRADE AS REQUIRED ON THE PURCHASE ORDER	✓	
8	IS THE MATERIAL LEGIBLY MARKED FROM THE SUPPLIER? THIS MAY BE STAMPED or STENCILED (record Grade. Type, Heat # And any other relevant information)	✓	

5 Blue Process Equipment Inc. OCT 1 8 2013 Quality Department

NOTE: If any of these inspection steps cannot be completed the inspector shall notify the QS ASAP. The QS shall make out a NCR detailing the discrepancies and the material in question shall be quarantined until a satisfactory solution to the problem can be resolved. This may include rework or sending the material back to the supplier

Inspector :_____ **Signature:** _____ **Date** OCT 1 8 2013

ROSEMARY KUNTZ
SAFETY / MTR
(780) 955-2040E:226

DIVISION OF RUSSEL METALS INC.

OE61509131-14898

SUBJECT TO ALL TERMS, CONDITIONS AND LIMITATIONS INCORPORATED BY REFERENCE AS SHOWN ON THE BACK OF THIS BILL.

RUSSEL METALS INC.
P.O.BOX 4128
EDMONTON, AB T6E4T2 TEL#: (780)439-2051

Requested Date: 10/03/13
Salesperson: TREVOR SELLIN

SHIPPED TO 00
5BLUE PROCESS EQUIPMENT INC.
2303 - 8 STREET
NISKU AB T9E 7Z3

SOLD TO 6113521 10/02/13
5BLUE PROCESS EQUIPMENT INC.
2303 - 8 STREET
NISKU AB T9E 7Z3

FREIGHT TERMS
PREPAID
CARRIER RT# 012
OUR TRUCK
CUSTOMER PHONE #
780-955-2040

CPO# P7916-5B1108-11 RELEASE# ROB

LN#01 38700 HOT ROLLED ANGLE PART#	2 X 2 X 1/4 HR ANG 44W X 20'		Ordered QTY 5 EA	319 LB
Shipped QTY.....				
TAG 1260956 HEAT 52062342	5 EA	319 LB		
LN#02 47002 HOT ROLL FLAT BAR PART#	1/4 X 2 HR FLAT 44W X 20'		Ordered QTY 3 EA	102 LB
Shipped QTY.....				
TAG 1260786 HEAT 51127098	3 EA	102 LB		
LN#03 38156 HOT ROLL FLAT BAR PART#	1/4 X 6 HR FLAT 44W X 20'		Ordered QTY 2 EA	204 LB
Shipped QTY.....				
TAG 1261066 HEAT R654658	2 EA	204 LB		
LN#04 54400 SERRATED BAR GRATING UNPAINTED PART#	3/16 X 1 1/4 19-4 B/G SERR UN- 36" X 288"		Ordered QTY 2 EA	1277 LB
Shipped QTY.....				
TAG 1261633 HEAT NA	2 EA	1277 LB		
LN#05 37656 HOT ROLLED ROUND BAR PART#	3/4" HR ROUND 44W X 20'		Ordered QTY 1 EA	30 LB
Shipped QTY.....				
TAG 1258447 HEAT SE13102722	1 EA	30 LB		

5 Blue Process Equipment Inc. OCT 18 2013 Quality Department

RECEIVED OCT 04 2013

PAGE: 1 TOTAL SKIDS _____ 13 EA 1932 LB

STEEL, STAINLESS STEEL, ALUMINUM, BRASS, COPPER, NICKEL AND SPECIALTY STEEL

The above listed products, in a natural state, do not pose inhalation, ingestion or contact hazards.

Prolonged overexposure to dust or fumes during welding, burning, grinding or machining may result in respiratory irritation, skin irritation or disease. USE ADEQUATE VENTILATION AND APPROPRIATE PERSONAL PROTECTIVE EQUIPMENT.

For Brass and Copper Alloys, contact with acids may liberate flammable and explosive hydrogen gas. If heated, copper oxide, zinc oxide, nickel oxide, tin oxide, cadmium oxide and/or lead fumes may be evolved. Aluminum products may slip during handling or transportation.

ALL PRODUCTS MUST BE SECURED FOR HANDLING AND TRANSPORTATION. Cutting steel containment strapping may result in the strapping rebounding and injuring those nearby. EXERCISE CAUTION.

For overexposure to metal fumes, remove to fresh air. For skin contact, wash thoroughly with soap and water. Obtain medical attention if symptoms persist.

SEE MATERIAL SAFETY DATA SHEETS FOR MORE DETAILED INFORMATION.

THE LOAD MUST BE TARPED AND KEPT DRY

DATE _____ SIGNED _____

PURCHASER'S ORDER IS FILLED IN ACCORDANCE WITH THE ABOVE TERMS AND CONDITIONS AND THOSE ON THE REVERSE HEREOF, ALL OF WHICH TERMS AND CONDITIONS SUPERSEDE THE TERMS AND CONDITIONS (IF ANY) OF PURCHASER'S ORDER. BY ACCEPTING DELIVERY OF ALL OR PART OF THE ABOVE-DESCRIBED GOODS (HEREINAFTER CALLED THE "GOODS") OR BY PAYING FOR SAME IN WHOLE OR IN PART PURCHASER AGREES TO ALL THE TERMS AND CONDITIONS SET FORTH ABOVE AND ON THE REVERSE HEREOF.

F9-RI Rev 01/10

61A049772

GERDAU

GERDAU MANITOBA MILL
27 MAIN ST.
SELKIRK MB R1A 1P6 CAN

Chemical and Physical Test Report

MADE IN CANADA

Ship To :
RUSSELSTEEL INC
7016 - 99TH STREET

EDMONTON ,AB

BOL Shippers No : 1300-0000005216
Sales Order No : 564846
Purchase Order No : M61044938

SHAPE + SIZE	GRADE	SPECIFICATION	SALES ORDER	CUST P.O. NUMBER
F1/4 X 6	44W/50W	CSA G40.21-04		

HEAT I.D.	C	Mn	P	S	Si	Cu	Ni	Cr	Mo	V	Nb	B	N	Sn	Al	Ti	Ca	C Eqv
R654657	.19	1.09	.010	.025	.23	.30	.08	.11	.019	.000	.000	.0002	.0000	.011	.004	.00270	.00140	.372

Mechanical Test: Yield 52700 PSI, 363.35 MPA Tensile: 80100 PSI, 552.27 MPA %El: 32.2/2in, 32.2/50.8mm
Customer Requirements CASTING: STRAND CAST
Mechanical Test: Yield 53500 PSI, 368.87 MPA Tensile: 80900 PSI, 557.79 MPA %El: 32.7/2in, 32.7/50.8mm
Customer Requirements CASTING: STRAND CAST

SHAPE + SIZE	GRADE	SPECIFICATION	SALES ORDER	CUST P.O. NUMBER
F1/4 X 6	44W/50W	CSA G40.21-04		

HEAT I.D.	C	Mn	P	S	Si	Cu	Ni	Cr	Mo	V	Nb	B	N	Sn	Al	Ti	Ca	C Eqv
R654658	.20	1.04	.008	.022	.22	.29	.08	.11	.019	.000	.000	.0003	.0000	.011	.004	.00260	.00110	.369

Mechanical Test: Yield 52800 PSI, 364.04 MPA Tensile: 79800 PSI, 550.2 MPA %El: 32.5/2in, 32.5/50.8mm
Customer Requirements CASTING: STRAND CAST
Mechanical Test: Yield 52700 PSI, 363.35 MPA Tensile: 80800 PSI, 557.1 MPA %El: 31.9/2in, 31.9/50.8mm
Customer Requirements CASTING: STRAND CAST

Customer Notes: NO WELD REPAIRMENT PERFORMED. STEEL NOT EXPOSED TO MERCURY.

This material, including the billets, was melted and manufactured in Canada

Bhaskar Yalamanchili
Quality Director
Gerdau

THE ABOVE FIGURES ARE CERTIFIED CHEMICAL AND PHYSICAL TEST RECORDS AS CONTAINED IN THE PERMANENT RECORDS OF COMPANY.

Metallurgical Services Manager
GERDAU MANITOBA MILL

Seller warrants that all material furnished shall comply with specifications subject to standard published manufacturing variations. NO OTHER WARRANTIES, EXPRESSED OR IMPLIED, ARE MADE BY THE SELLER, AND SPECIFICALLY EXCLUDED ARE WARRANTIES OF MERCHANTABILITY AND FITNESS FOR A PARTICULAR PURPOSE.
In no event shall seller be liable for indirect, consequential or punitive damages arising out of or related to the materials furnished by seller.
Any claim for damages for materials that do not conform to specifications must be made from buyer to seller immediately after delivery of same in order to allow the seller the opportunity to inspect the material in question.

Process Equipment Inc.
OCT 18 2013
Quality Department

SOLD TO: RUSSEL - EDMONTON
P O BOX 4128
EDMONTON AB T6E 4T2
CANADA

SHIP TO: RUSSEL METALS INC
7016 99TH STREET
EDMONTON AB T6E 4T2
CANADA

NUCOR
NUCOR STEEL SEATTLE, INC.

CERTIFIED MILL TEST REPORT

61A048381

Ship from:

Nucor Steel Seattle, Inc.
2424 SW Andover
SEATTLE, WA 98106-1100
206-933-2222

Date: 25-Jun-2013
B.L. Number: 452947
Load Number: 283662

Material Safety Data Sheets are available at www.nucorbar.com or by contacting your inside sales representative.

NBMG-08 January 1, 2012

LOT # / HEAT #	DESCRIPTION	PHYSICAL TESTS					CHEMICAL TESTS							
		YIELD P.S.I.	TENSILE P.S.I.	ELONG % IN 8"	BEND	WT% / DEF	C / Ni	Mn / Cr	P / Mo	S / V	Si / Cb	Cu / Sn	C.E.
PO# =>	M61044370												
SE1310272201	Nucor Steel - Seattle Inc	53,949	76,614	26.6%		***	.15	.88	.015	.029	.18	.29	.36
SE13102722	3/4" (.7500) Round	372MPa	528MPa				.10	.17	.020	.012	.002		
	20' A36/44W	53,332	76,620	25.0%									
	CSA G40.21-04 44W/ASTM A36/A36M-08	368MPa	528MPa										
	ASTM A709/A709M-11 GR 36 [250]												
	ASME SA36-2007 EDITION-2011 ADDENDA												
	ASTM A36/A36M-08, A709/709M-11 GR36, ASME SA36-10 Ed '11 Ad.												
PO# =>	M61044370												
SE1310272301	Nucor Steel - Seattle Inc	55,436	75,986	23.4%		***	.16	.85	.013	.030	.20	.38	.37
SE13102723	3/4" (.7500) Round	382MPa	524MPa				.11	.13	.030	.011	.001		
	20' A36/44W	54,803	75,791	25.0%									
	CSA G40.21-04 44W/ASTM A36/A36M-08	378MPa	523MPa										
	ASTM A709/A709M-11 GR 36 [250]												
	ASME SA36-2007 EDITION-2011 ADDENDA												
	ASTM A36/A36M-08, A709/709M-11 GR36, ASME SA36-10 Ed '11 Ad.												

S. Ellis Process Equipment Inc.
OCT 18 2013
Quality Department

I hereby certify that the material described herein has been manufactured in accordance with the specifications and standards listed above and that it satisfies those requirements.
1.) Weld repair was not performed on this material.
2.) Melted and Manufactured in the United States.
3.) Mercury, Radium, or Alpha source materials in any form have not been used in the production of this material.

QUALITY ASSURANCE: _____

GERDAU

CA-ML-CAMBRIDGE
160 ORION PLACE
CAMBRIDGE, ON N1T 1R9
Canada

CERTIFIED M[illegible]RIAL TEST REPORT

61A049649

CUSTOMER SHIP TO	CUSTOMER BILL TO
RUSSEL METALS INC . 7016 99TH ST NW EDMONTON,AB T6E 3R3 Canada	RUSSEL METALS INC 7016 99TH STREET NW EDMONTON,AB T6E 4T2 Canada

GRADE	SHAPE / SIZE
A36/44W	Flat / 1/4 X 2

LENGTH	WEIGHT	HEAT / BATCH
20'00"	79,594 LB	51127098/02

SALES ORDER	CUSTOMER MATERIAL N°
397208/000020	

SPECIFICATION / DATE or REVISION
1-ASTM A6/A6M-11
2-A36/A36M-08,A709-11
3-CSA G40.21-04 (R2009)
4-AASHTO M270-11

CUSTOMER PURCHASE ORDER NUMBER	BILL OF LADING	DATE
61044113	1301-0000005764	08/16/2013

CHEMICAL COMPOSITION

C %	Mn %	P %	S %	Si %	Cu %	Ni %	Cr %	Mo %	V %	Nb %	Al %	B %
0.17	0.57	0.013	0.039	0.19	0.29	0.12	0.16	0.030	0.003	0.002	0.001	0.0001

CHEMICAL COMPOSITION

Zn %	Zr %	Sn %
0.003	0.001	0.011

MECHANICAL PROPERTIES

Elong. %	G/L Inch	G/L mm	UTS PSI	UTS MPa	YS PSI
22.00	8.000	200.0	72064	497	51309
23.00	8.000	200.0	71212	491	50579

MECHANICAL PROPERTIES

YS MPa
354
349

COMMENTS / NOTES

5 Blue Process Equipment Inc.
OCT 18 2013
Quality Department

The above figures are certified chemical and physical test records as contained in the permanent records of company. This material, including the billets, was melted and manufactured in Canada. CMTR complies with EN 10204 3.1.

BHASKAR YALAMANCHILI
QUALITY DIRECTOR

MARYAM CHAMANEH
QUALITY ASSURANCE MGR.

GERDAU

CERTIFIED MATERIAL TEST REPORT

61A049734

CA-ML-WHITBY
HOPKINS STREET SOUTH
WHITBY, ON L1N 5T1
Canada

CUSTOMER SHIP TO	CUSTOMER BILL TO
RUSSEL METALS INC 7016 99TH ST NW EDMONTON,AB T6E 3R3 Canada	RUSSEL METALS INC 7016 99TH STREET NW EDMONTON,AB T6E 4T2 Canada

GRADE	SHAPE / SIZE	LENGTH	WEIGHT	HEAT / BATCH
A36/44W/A529-50	Angle / 2X2X1/4	20'00"	118,793 LB	52062342/02

SALES ORDER	CUSTOMER MATERIAL N°
415601/000030	

SPECIFICATION / DATE or REVISION
1-ASTM A6/A6M-11, A36/A36M-08
2-A709/A709M-11 GR36/50
3-A529/A529M-05 GR50
4-CSA G40.21-04(R2009) 44W/50W

CUSTOMER PURCHASE ORDER NUMBER	BILL OF LADING	DATE
61044188	1302-0000007886	08/23/2013

CHEMICAL COMPOSITION

C %	Mn %	P %	S %	Si %	Cu %	Ni %	Cr %	V %	Nb %
0.16	0.96	0.020	0.045	0.20	0.32	0.11	0.17	0.001	0.006

MECHANICAL PROPERTIES

Elong. %	UTS PSI	UTS MPa	YS 0.2% PSI	YS MPa
26.20	75667	522	53889	372
26.20	75829	523	54355	375

COMMENTS / NOTES

Equipment Inc.
OCT 18 2013
Quality Department

The above figures are certified chemical and physical test records as contained in the permanent records of company. This material, including the billets, was melted and manufactured in Canada. CMTR complies with EN 10204 3.1.

BHASKAR YALAMANCHILI
QUALITY DIRECTOR

LEONARDO NUNES
QUALITY ASSURANCE MGR.

5Blue
Process Equipment Inc.

RECEIVING INSPECTION REPORT

DATE: OCT 1 6 2013 **PURCHASE ORDER#** 1108-11

CUSTOMER/OWNER Inter Hoop

DESCRIPTION OF MATERIAL:	PLATE	TUBE /PIPE	BAR	FITTINGS	

		YES	NO
1	MATERIALS CORRECT TO PURCHASE ORDER:	✓	
2	MTR SUPPLIED WITH MATERIALS	✓	
3	MTR CHECKED AGAINST PACKING SLIP	✓	
4	MTR CORRECT FOR THIS MATERIAL	✓	
5	IS MATERIALS IN GOOD CONDITION (NO DAMAGE):	✓	
6	IS MATERIAL THE SAME SIZE AND SCHEDULE AS REQUIRED ON THE PURCHASE ORDER:	✓	
7	IS MATERIAL THE CORRECT GRADE AS REQUIRED ON THE PURCHASE ORDER	✓	
8	IS THE MATERIAL LEGIBLY MARKED FROM THE SUPPLIER? THIS MAY BE STAMPED or STENCILED (record Grade. Type, Heat # And any other relevant information)	✓	

5 Blue Process Equipment Inc. OCT 1 6 2013 Quality Department

NOTE: If any of these inspection steps cannot be completed the inspector shall notify the QS ASAP. The QS shall make out a NCR detailing the discrepancies and the material in question shall be quarantined until a satisfactory solution to the problem can be resolved. This may include rework or sending the material back to the supplier

Inspector : _____ **Signature:** _____ **Date** OCT 1 6 2013

ROSEMARY KUNTZ
SAFETY / MTR
(780) 955-2040E:226

FAB-U-TECH INDUSTRIES

1204 8TH STREET, NISKU, ALBERTA
PH: (780) 955 - 3999 FAX: (780) 955 - 2821

W/O # **89720**
DATE: 2/10/13
CUSTOMER: **5 BLUE**
CONTACT: ROB
PHONE: 780-955-2040
PO # P7920-5B1108-11
ADDRESS: **2303-8 ST NISKU, AB**

Total Qty. Ordered	DESCRIPTION	Pg#	Item#		Date	B/O
					9-Oct-13	
	MTR ENVELOPE ENCLOSED				Ship Qty.	B/O Qty.
2	1/4" x 2-1/2" FB 44W TOP & INTER HOOP 36-5/16 O.A. REF. x 15" I R	1			2	0
1	1/4" x 2-1/2" FB 44W BTM HOOP 34-1/4" O.A. REF. x 15" INS R	2			1	0
						0
						0

Customer Name	Customer PO#	Shipper No	Heat Number
FAB-U-TECH INDUSTRIES INC.	33057	542148	PL13202851

NUCOR
NUCOR CORPORATION
NUCOR STEEL UTAH

Mill Certification
5/16/2013

PO Box 100
7285 West 21200 North
PLYMOUTH, UT 84330
(435) 458-2300
Fax: (435) 458-2309

Sold To: VARSTEEL LTD.-NISKU/RED DEER A
602 13TH AVE
NISKU AB T9E 7P6
CANADA

Ship To: VARSTEEL LTD.
602 13TH AVE
NISKU AB T9E 7P6
CANADA
(403) 320-1953
Fax: (780) 955-1901

Customer P.O.	NI-964188	Sales Order	196811.10
Product Group	Merchant Bar Quality	Part Number	532502502404460
Grade	CSA G40.21-04 44W/ASTM A36/A36M-08	Lot #	PL1320285101
Size	1/4x2-1/2" Flat	Heat #	PL13202851
Product	1/4x2-1/2" Flat 20' A36/44W	B.L. Number	U1-438179
Description	A36/44W	Load Number	U1-252271
Customer Spec		Customer Part #	

I hereby certify that the material described herein has been manufactured in accordance with the specifications and standards listed above and that it satisfies those requirements.

Roll Date: 4/26/2013 Melt Date: 4/23/2013 Qty Shipped LBS: 4,084 Qty Shipped Pcs: 96

ASTM A36/A36M-08, A709/709M-11 GR36, ASME SA36-10 Ed '11 Ad.
ASME SA36-2007 EDITION-2011 ADDENDA
ASTM A709/A709M-11 GR 36 [250]

C	Mn	P	S	Si	Cu	Ni	Cr	Mo	V	Cb	CE4020
0.17%	0.73%	0.015%	0.040%	0.24%	0.25%	0.11%	0.17%	0.034%	0.0050%	0.005%	0.36%

CE4020: G40.20 CARBON EQUIVALENT

Yield 1: 52,132psi (359MPa) Tensile 1: 73,212psi (505MPa) Elongation: 26% in 8"(% in 203.3mm)
Yield 2: 52,704psi (363MPa) Tensile 2: 72,633psi (501MPa) Elongation 30% in 8"(% in 203.3mm)

Specification Comments:

Comments: NUCOR - PLYMOUTH IS AN I.S.O. 9001 AND AN A.B.S. CERTIFIED MILL
CMTR COMPLIES WITH DIN EN 10204 - 3.1.B

ALL MANUFACTURING PROCESSES OF THE STEEL MATERIALS IN THIS PRODUCT, INCLUDING MELTING, HAVE OCCURRED WITHIN THE UNITED STATES. ALL PRODUCTS PRODUCED ARE WELD FREE. MERCURY, IN ANY FORM, HAS NOT BEEN USED IN THE PRODUCTION OR TESTING OF THIS MATERIAL.

5 Blue Process Equipment Inc.
OCT 16 2013
Quality Department

1/4" x 2 1/2" FB
110 @ 20'
Heat # PL13202851
July 25/13

Cory Anthony
Division Metallurgist

5Blue
Process Equipment Inc.

RECEIVING INSPECTION REPORT

DATE: SEP 3 0 2013 PURCHASE ORDER# 1108-11

CUSTOMER/OWNER

DESCRIPTION OF MATERIAL:	PLATE (Plate)	TUBE /PIPE	BAR	FITTINGS	

		YES	NO
1	MATERIALS CORRECT TO PURCHASE ORDER:	✓	
2	MTR SUPPLIED WITH MATERIALS	✓	
3	MTR CHECKED AGAINST PACKING SLIP	✓	
4	MTR CORRECT FOR THIS MATERIAL	✓	
5	IS MATERIALS IN GOOD CONDITION (NO DAMAGE):	✓	
6	IS MATERIAL THE SAME SIZE AND SCHEDULE AS REQUIRED ON THE PURCHASE ORDER:	✓	
7	IS MATERIAL THE CORRECT GRADE AS REQUIRED ON THE PURCHASE ORDER	✓	
8	IS THE MATERIAL LEGIBLY MARKED FROM THE SUPPLIER? THIS MAY BE STAMPED or STENCILED (record Grade, Type, Heat # And any other relevant information)	✓	

5 Blue Process Equipment Inc. SEP 3 0 2013 Quality Department

NOTE: If any of these inspection steps cannot be completed the inspector shall notify the QS ASAP. The QS shall make out a NCR detailing the discrepancies and the material in question shall be quarantined until a satisfactory solution to the problem can be resolved. This may include rework or sending the material back to the supplier

Inspector : Signature: Date SEP 3 0 2013

RÓSEMARY KUNTZ
SÄFETY / MTR
(780) 955-2040E:228

Procam Machine & Manufacturing Ltd.

3904 - 84 Ave
Leduc, AB T9E 8M6
Phone: 780-980-3670
Fax: 780-980-3672

3691

Date: Sept 24/13

Ship To: 5 Blue
Via Dunrite

Bill To:

Order #: 83360

Purchase Order #: P7818-5B1108-11

Item#	Quantity Ordered	Quantity Shipped	Backorder	Units	Description
1	1	1			10x 3/8 X 1'6" - fishplate
2	1	1			7 x 3/8 x 1'2"
3	1	1			7'1/4" x 3/8 x 1'2"
4	2	2			10'1/4" x 3/8 x 1'4"
5	2	2			10'1/8" x 3/8" x 1'2"
6	2	2			10 9/16" x 3/8 x 1'-1 1/2"
7	2	2			8" x 3/8" x 8'1/4"
8	2	2			7 11/16" x 3/8 x 1'-1 1/2"
9	10	10			2'3/16 x 3/8" x 5 3/8"
10					

Receivers Signature: TC 2

RECEIVED SEP 25 2013

RECEIVED SEP 25 2013

5 Blue Process Equipment Inc. SEP 30 2013 Quality Department

Thank you for your business!

HT # NW6457
64875

EVRAZ EVRAZ INC. NA

Test Certificate

8250 130th Street, Surrey, BC, V3W 8J9

Form TC1 : Revision 1: Date 31 Oct 2000

Customer:
PRICE STEEL CO. LTD.
13500 - 156TH STREET

EDMONTON
AB T5V1L3

Customer P.O. No.: 32546F

Mill Order No.: 41-247812-07

Shipping Manifest : ST052025

Product Description: CSA G40.21(2004)44W/300W / ASTM A36(05)
A709(01A)36/ASME SA36(01ED)

Ship Date: 05 Feb 13
Cert Date: 05 Feb 13

Cert No: 011145954
(Page 1 of 1)

Size: 0.375 X 96.00 X 288.0 (IN)

Tested Pieces				Tensiles					Charpy Impact Tests							
Heat Id	Piece Id	Piece Dimensions	Tst Loc	YS (PSI)	UTS (PSI)	%RA	Elong % 2in 8in	Tst Dir	Average Hardness	Abs. Energy(FTLB) 1 2 3 Avg	% Shear 1 2 3 Avg	Tst Tmp	Tst Dir	Tst Siz (mm)	BDWTT Tmp %Shr
NW6429	A91810AA	0.375 X 96.00 (CUT)	L	52000	69000		34	T							
			C	50000	68000		35	T							
NW6457	A91801A	0.375 X 96.00 (CUT)	L	55000	71000		32	T							
			C	53000	71000		35	T							
NW6464	A91861AA	0.375 X 96.00 (CUT)	L	66000	78000		30	T							
			C	59000	73000		34	T							

Chemical Analysis

Heat Id	C	Mn	P	S	Si	Tot Al	Cu	Ni	Cr	Mo	Cb	V	Ti	B	N	ORGN
NW6429	.12	.86	.013	.007	.23	.045	.01	.05	.02	.00	.005	.009	.002	.0000	.0043	CAN
NW6457	.14	.92	.013	.006	.23	.041	.01	.05	.02	.00	.005	.007	.002	.0000	.0044	CAN
NW6464	.13	.85	.013	.007	.24	.037	.02	.05	.02	.00	.005	.008	.002	.0000	.0038	CAN

MATERIAL MARKED WITH AN ASTERISK IS PRODUCED FROM COIL

* NW6429 A91810AA PCES: 1, WGT: 2940

* NW6457 A91801A PCES: 6, WGT: 17642

* NW6464 A91861AA PCES: 15, WGT: 44105

Blue Process Equipment Inc.
SEP 30 2013
Quality Department

Cust Part # :

WE HEREBY CERTIFY THAT THIS MATERIAL WAS TESTED IN ACCORDANCE WITH THE APPROPRIATE SPECIFICATION

Greg Balsdon
CHECKED BY

5Blue
Process Equipment Inc.

RECEIVING INSPECTION REPORT

DATE: SEP 3 0 2013 PURCHASE ORDER# 1108-11

CUSTOMER/OWNER

Angle

DESCRIPTION OF MATERIAL:	PLATE	TUBE /PIPE	BAR	FITTINGS	

		YES	NO
1	MATERIALS CORRECT TO PURCHASE ORDER:	✓	
2	MTR SUPPLIED WITH MATERIALS	✓	
3	MTR CHECKED AGAINST PACKING SLIP	✓	
4	MTR CORRECT FOR THIS MATERIAL	✓	
5	IS MATERIALS IN GOOD CONDITION (NO DAMAGE):	✓	
6	IS MATERIAL THE SAME SIZE AND SCHEDULE AS REQUIRED ON THE PURCHASE ORDER:	✓	
7	IS MATERIAL THE CORRECT GRADE AS REQUIRED ON THE PURCHASE ORDER	✓	
8	IS THE MATERIAL LEGIBLY MARKED FROM THE SUPPLIER? THIS MAY BE STAMPED or STENCILED (record Grade. Type, Heat # And any other relevant information)	✓	

5 Blue Process Equipment Inc. SEP 3 0 2013 QC Department

NOTE: If any of these inspection steps cannot be completed the inspector shall notify the QS ASAP. The QS shall make out a NCR detailing the discrepancies and the material in question shall be quarantined until a satisfactory solution to the problem can be resolved. This may include rework or sending the material back to the supplier

Inspector : Signature: Date SEP 3 0 2013

ROSEMARY KUNTZ
SAFETY / MTR
(780) 955-2040E:22E

9525 - 60TH AVENUE
EDMONTON AB T6E 0C3
780-434-8441

BILL OF LADING: 413574

WILKINSON
STEEL AND METALS

S/O #: S30923FN001

Ship Date: 9/24/13
Page: 1

CUSTOMER: 6905
5BLUE PROCESS EQUIPMENT INC
2803-8TH STREET
NISKU AB T9E 7Z3
780-955-2040

SHIP TO: 6952
5BLUE PROCESS EQUIPMENT INC.
2303 - 8TH STREET
NISKU AB XXX XXX

Cust. P.O. : P7826-581108-11
F.O.B. : PPD

Ship Via: OT
Zone : 70

DESCRIPTION	QTY ORDERED	QTY SHIPPED	LOC	SIGN
[illegible] ROLLED ANGLE (HRL -AN)	7 PC 1008 LB	7 PC	7HS	KL
[illegible] 0000 3 0.3750 240				
[illegible] 036 / 44W				
[illegible]AY/ROW/RACK:7/ES/999 7/DS/999				
		1 BDL		
[illegible]ERTIFICATION REQUIRED: MILL				
[illegible]: P30627KR004 HEAT: SE13101709				
[illegible]ELIVERY CHARGE (DELIVERY-E-S[illegible]	65 PC	65 PC		
[illegible]0000				

RECEIVED SEP 24 2013

5 Blue Process Equipment Inc.
SEP 30 2013
Quality Department

[illegible] WEIGHT: 1008 LB

RECEIVED: Signature [signature]
print name Rob Klassen

1910 - 2010
WILKINSON
A CENTURY OF SERVICE

[illegible] - Last Updated by FN at 9.12 on 9/23/13. Printed at 19.20 on 9/23/13 by E4. PACKING SLIP: 26901 GST #: R104291885

SOLD TO: WILKINSON STEEL & METALS INC
A DIV OF SAMUEL SON & CO LTD
888 SE MARINE DR
VANCOUVER BC V5X 2V3
CANADA

SHIP TO: WILKINSON STEEL & METALS TRUCK
9525-60 AVE
EDMONTON AB T6E 0C3
CANADA

NUCOR
NUCOR STEEL SEATTLE, INC.

CERTIFIED MILL TEST REPORT

Ship from:
Nucor Steel Seattle, Inc.
2424 SW Andover
SEATTLE, WA 98106-1100
206-933-2222

Date: 3-Jul-2013
B.L. Number: 453375
Load Number: 284320

Material Safety Data Sheets are available at www.nucorbar.com or by contacting your inside sales representative.

NBMG-08 January 1, 2012

LOT # / HEAT #	DESCRIPTION	PHYSICAL TESTS: YIELD P.S.I.	TENSILE P.S.I.	ELONG % IN 8"	BEND	WT% / DEF	CHEMICAL TESTS: C / Ni	Mn / Cr	P / Mo	S / V	Si / Cb	Cu / Sn	C.E.
PO# =>	P30627KR004E												
SE1310170902	Nucor Steel - Seattle Inc	52,749	77,067	30.5%		***	.16	.95	.015	.040	.18	.30	.38
SE13101709	3x3x3/8 Angle	364MPa	531MPa				.11	.15	.030	.013 0	.00		
	20' A36/44W	52,957	77,792	29.7%									
	CSA G40.21-04 44W/ASTM A36/A36M-08	365MPa	536MPa										
	ASTM A709/A709M-11 GR 36 [250]												
	ASME SA36-2007 EDITION-2011 ADDENDA												
	ASTM A36/A36M-08, A709/709M-11 GR36, ASME SA36-10 Ed '11 Ad.												
PO# =>	P30627KR004E												
SE1310172101	Nucor Steel - Seattle Inc	51,780	75,272	32.0%		***	.16	.86	.013	.035	.18	.29	.37
SE13101721	3x3x1/4 Angle	357MPa	519MPa				.16	.15	.040	.012	.006		
	20' A36/44W	51,912	75,293	30.5%									
	CSA G40.21-04 44W/ASTM A36/A36M-08	358MPa	519MPa										
	ASTM A709/A709M-11 GR 36 [250]												
	ASME SA36-2007 EDITION-2011 ADDENDA												
	ASTM A36/A36M-08, A709/709M-11 GR36, ASME SA36-10 Ed '11 Ad.												

5 Blue Process Equipment Inc. SEP 30 2013 Quality Department

I hereby certify that the material described herein has been manufactured in accordance with the specifications and standards listed above and that it satisfies those requirements.
1.) Weld repair was not performed on this material.
2.) Melted and Manufactured in the United States.
3.) Mercury, Radium, or Alpha source materials in any form have not been used in the production of this material.

QUALITY ASSURANCE: Erik Nissen

S30923FN001-1 5BLUE PROCESS E - Cert#: P30627KR004.SE13101709 - P.O.#: P7826-5B



B15 Function Test Report

2303-8th Street, Nisku Alberta, T9E-7Z3 CANADA

This section does not apply

B16 Third Party Supplier Inspection Reports

2303-8th Street, Nisku Alberta, T9E-7Z3 CANADA

QA / QC DOCUMENTATION

Job# 13010163B

Ferrier Central Processing Facility
Central Oil Battery – Liquid Extraction Plant
Cardium Inlet Separator Package (002-PK-01-1600)

MAIN INDEX

1.		ITP
2.		Electrical Forms
	2-1.1	Lighting & Receptacles
	2-1.2	Grounding System
	2-1.3	Cable Interconnects
	2-1.4	Junction Boxes
	2-1.5	Power Cable Interconnects
	2-1.6	Heat Trace
6.		Final Completion
7.		RFI's
8.		NCR's
9.		Punch List
10.		Shipping (Site Activities)
11.		Test Equipment Certificate of Calibrations
12.		Inspector Reports

1.

INSPECTION & TEST PLAN (ITP) CHECKLIST

PROJECT	Ferrier Central Process Facility
CLIENT	Devon NEC Corp.
CONTRACT	

BUILDING #	Cardium
TARPON JOB #	13010163B
DOCUMENT #	
AFE #	

TARPON LEGEND

Checkpoint	- Checkpoints performed in-house with no Documentation.
Process / Surveillance	- Quality surveillance verification activities performed which do not require advance client notification and documented for review.
Review	- Tarpon to submit to client prior to performance of the activity for review.
Witness	- Tarpon to notify the buyer of the dedicated inspection activity. Buyer representative is present.
Hold Point	- Must not proceed past these points until inspection is verified by client and documented.

CLIENT LEGEND

HP- Hold Point	- Must not proceed past these points until inspection is verified by client and documented.
DR- Document Review	- Review of documents assuring document is complete, signed and legible
S- Surveillance	- Intermittent inspections related to the QA/QC or production activities
I-Inspection	- Inspections related to the QA/QC or production activities
R-Review	- Review of records assuring document is complete, signed and legible
W-Witness	- Witness point provide the opportunity to verify the inspection or test
V-Verify	- The person performing the work verifies the quality progressively

SECTION 1- ELECTRICAL BUILDING SERVICES

Subsection 1.1 LIGHTING & RECEPTACLES		Tarpon Legend	Tarpon Rep	Date	Client Legend	Client Rep	Date	Comments	Acceptance Criteria	Verification Document
1	Approval Drawings Check	Hold Point		9/04/14	DR		24-4-14			Electrical IFC Drawing Package
2	Material Verification as per Engineering Records Prior to Construction	Checkpoint		9/04/14	S		/		Equipment verified to dwgs & docs	Electrical IFC Drawing Package
3	Equipment Location Verified with Engineering Records	Checkpoint		9/04/14	S		/		Equipment verified to dwgs & docs	Electrical IFC Drawing Package
4	Post Installation Inspection & Testing	Process / Surveillance		9/04/14	I		/		QA Documentation	TEC-Q-F-0129

Subsection 1.2 GROUNDING SYSTEM		Tarpon Legend	Tarpon Rep	Date	Client Legend	Client Rep	Date	Comments	Acceptance Criteria	Verification Document
1	Approval Drawings Check	Hold Point		9/04/14	DR		24-4-14			Electrical IFC Drawing Package
2	Material Verification as per Engineering Records Prior to Construction	Checkpoint		9/04/14	S		/		Equipment verified to dwgs & docs	Electrical IFC Drawing Package
3	Equipment Location Verified with Engineering Records	Checkpoint		9/04/14	S		/		Equipment verified to dwgs & docs	Electrical IFC Drawing Package
4	Post Installation Inspection & Testing	Process / Surveillance		9/04/14	I		/		QA Documentation	TEC-Q-F-0112

Subsection 1.3 CABLE INTERCONNECTS		Tarpon Legend	Tarpon Rep	Date	Client Legend	Client Rep	Date	Comments	Acceptance Criteria	Verification Document
1	Approval Drawings Check	Hold Point		9/04/14	DR		24-4-14			Electrical IFC Drawing Package
2	Material Verification as per Engineering Records Prior to Construction	Checkpoint		9/04/14	S		/		Equipment verified to dwgs & docs	Electrical IFC Drawing Package
3	Equipment Type and Location Verified With Engineering Records	Checkpoint		9/04/14	S		/		Equipment verified to dwgs & docs	Electrical IFC Drawing Package
4	Post Installation Inspection & Testing	Process / Surveillance		9/04/14	I		/		QA Documentation	TEC-Q-F-0102

INSPECTION & TEST PLAN (ITP) CHECKLIST

PROJECT	Ferrier Central Process Facility
CLIENT	Devon NEC Corp.
CONTRACT	

BUILDING #	Cardium
TARPON JOB #	130101631B
DOCUMENT #	
AFE #	

TARPON LEGEND

Checkpoint	- Checkpoints performed in-house with no Documentation.
Process / Surveillance	- Quality surveillance verification activities performed which do not require advance client notification and documented for review.
Review	- Tarpon to submit to client prior to performance of the activity for review.
Witness	- Tarpon to notify the buyer of the dedicated inspection activity. Buyer representative is present.
Hold Point	- Must not proceed past these points until inspection is verified by client and documented.

CLIENT LEGEND

HP- Hold Point	- Must not proceed past these points until inspection is verified by client and documented.
DR- Document Review	- Review of documents assuring document is complete, signed and legible
S- Surveillance	- Intermittent inspections related to the QA/QC or production activities
I-Inspection	- Inspections related to the QA/QC or production activities
R-Review	- Review of records assuring document is complete, signed and legible
W-Witness	- Witness point provide the opportunity to verify the inspection or test
V-Verify	- The person performing the work verifies the quality progressively

Subsection 1.4 JUNCTION BOXES		Tarpon Legend	Tarpon Rep	Date	Client Legend	Client Rep	Date	Comments	Acceptance Criteria	Verification Document
1	Approval Drawings Check	Hold Point		9/4/14	DR		24-4-14			Customer Supplied Panel Schedules
2	Material Verification as per Engineering Records Prior to Construction	Checkpoint		9/4/14	S		/		Equipment verified to dwgs & docs	Customer Supplied Panel Schedules
3	Equipment Type and Location Verified With Engineering Records	Checkpoint		9/4/14	S		/		Equipment verified to dwgs & docs	Electrical IFC Drawing Package
4	Post Installation Inspection & Testing	Process / Surveillance		9/4/14	I		/		QA Documentation	TEC-Q-F-0109

Subsection 1.5 POWER CABLE INTERCONNECTS (LV / MV / HV)		Tarpon Legend	Tarpon Rep	Date	Client Legend	Client Rep	Date	Comments	Acceptance Criteria	Verification Document
1	Approval Drawings Check	Hold Point		9/4/14	DR		24-4-14			Electrical IFC Drawing Package
2	Material Verification as per Engineering Records Prior to Construction	Checkpoint		9/4/14	S		/		Equipment verified to dwgs & docs	Electrical IFC Drawing Package
3	Equipment Type and Location Verified With Engineering Records	Checkpoint		9/4/14	S		/		Equipment verified to dwgs & docs	Electrical IFC Drawing Package
4	Post Installation Inspection & Testing	Process / Surveillance		9/4/14	I		/		QA Documentation	TEC-Q-F-0102, 0116, 0119

INSPECTION & TEST PLAN (ITP) CHECKLIST

PROJECT	Ferrier Central Process Facility
CLIENT	Devon NEC Corp.
CONTRACT	

BUILDING #	Cardium
TARPON JOB #	13010163D
DOCUMENT #	
AFE #	

TARPON LEGEND

Checkpoint	- Checkpoints performed in-house with no Documentation.
Process / Surveillance	- Quality surveillance verification activities performed which do not require advance client notification and documented for review.
Review	- Tarpon to submit to client prior to performance of the activity for review.
Witness	- Tarpon to notify the buyer of the dedicated inspection activity. Buyer representative is present.
Hold Point	- Must not proceed past these points until inspection is verified by client and documented.

CLIENT LEGEND

HP- Hold Point	- Must not proceed past these points until inspection is verified by client and documented.
DR- Document Review	- Review of documents assuring document is complete, signed and legible
S- Surveillance	- Intermittent inspections related to the QA/QC or production activities
I-Inspection	- Inspections related to the QA/QC or production activities
R-Review	- Review of records assuring document is complete, signed and legible
W-Witness	- Witness point provide the opportunity to verify the inspection or test
V-Verify	- The person performing the work verifies the quality progressively

SECTION 5- FINAL COMPLETION

Subsection 5.1 ELECTRICAL		Tarpon Legend	Tarpon Rep	Date	Client Legend	Client Rep	Date	Comments	Acceptance Criteria	Verification Document
1	Electrical Punchlists Completed	Process / Surveillance	CS	9/4/14	DR		24-4-14		Preparation Actions List	TEC-Q-F-0309
2	Redline Drawings Completed	Process / Surveillance	CS	9/4/14	DR		/		Turnover Package	TEC-Q-F-0103
3	Final Inspections, Redlines, Turnover Package	Witness	CS	9/4/14	V		/		Turnover Package	TEC-Q-F-0103

SECTION 6- SITE RE-INSTATEMENT

Subsection 6.1 ELECTRICAL		Tarpon Legend	Tarpon Rep	Date	Client Legend	Client Rep	Date	Comments	Acceptance Criteria	Verification Document
1	Visual Verification No Shipping Damage	Witness	CS	9/4/14	V		24-4-14			
2	Visual Inspection of Installed Ship Loose Items	Witness	CS	9/4/14	V		/		Shipping Preparation Actions List	Electrical Shipping List / Equipment List
3	Verify Cable Re-Connections	Witness	CS	9/4/14	V		/		Shipping Preparation Actions List	Site Activities List

ACCEPTANCE OF ITP

CONTRACTOR	NAME	SIGNATURE	DATE

INSPECTION SIGNATURE LOG

COMPANY NAME	REPRESENTATIVE / PRINT NAME	SIGNATURE	DATE
MTL Inspection	Barry Wimmer		24-4-14

2.

2-1.1

129. LIGHTING AND RECEPTACLE CHECKLIST

TARPON

ELECTRIC & CONTROLS DIVISION - (E&C): [X]	TARPON CONSTRUCTION MANAGEMENT - (TCM): [ ]

CLIENT NAME:	Devon	E-TICKET #:		JOB #:	13010163B
BRANCH LOCATION:	01 Edmonton	LOCATION/LSD:	5 Blue		

AREA/BUILDING TAG NO.:	Cardium Inlet Separator	EQUIPMENT LOCATION:	
CSA OR EQUIV.:	Yes	VOLTAGE:	120 VAC

STATUS: IP - INSPECTION PASS N/A - NOT APPLICABLE B/O - BY OTHERS	STATUS	INITIAL	DATE
LIGHTING FIXTURES			
INDIVIDUAL FIXTURES ARE OF PROPER TYPE AND WATTAGE, AS PER SPECIFICATIONS.	IP	C.S.	03-Mar-2014
FIXTURES SHALL INCLUDE LABELING FOR THE AREA CLASSIFICATION, AS REQUIRED.	IP	C.S	03-Mar-2014
FIXTURE MOUNTING, GUARDS, AND ACCESSORIES ARE AS PER DETAILS AND SPECIFICATIONS.	IP	C.S	03-Mar-2014
CONFIRM NUMBER INSTALLED AT LOCATION AND HEIGHT AS PER DETAILS, DRAWINGS, AND SPECIFICATIONS.	IP	C.S	03-Mar-2014
ALL LIGHT SWITCHES/PHOTOCELLS AND CONTROL DEVICES VERIFIED FOR PROPER OPERATION.	IP	C.S	03-Mar-2014
FIXTURE IS ORIENTED AS NEEDED TO PROPERLY ILLUMINATE INTENDED AREAS AND EQUIPMENT.	IP	C.S	03-Mar-2014
LIGHTS ENERGIZED; WIRE TAGS AND PANEL SCHEDULE CIRCUITS VERIFIED.	IP	C.S	03-Mar-2014
EMERGENCY LIGHTING TESTED FOR PROPER OPERATION.	IP	C.S	03-Mar-2014
WALL PACK EMERGENCY LIGHTING PROPERLY INSTALLED; BATTERIES IN PLACE AND TESTED.	IP	C.S	03-Mar-2014
EXISTING LIGHTS ARE LOCATED AS PER DRAWINGS AND SPECIFICATIONS, AND TESTED.	IP	C.S	03-Mar-2014
RECEPTACLES			
ALL RECEPTACLES ARE OF THE PROPER VOLTAGE AND AMPERAGE, AS PER SPECIFICATIONS.	IP	C.S	03-Mar-2014
CONFIRM NUMBERS INSTALLED AT LOCATION AND HEIGHT AS PER DETAILS, DRAWINGS, AND SPECIFICATIONS.	IP	C.S	03-Mar-2014
ALL RECEPTACLES SHALL INCLUDE LABELING FOR THE AREA CLASSIFICATIONS, AS REQUIRED.	IP	C.S	03-Mar-2014
ALL RECEPTACLES IDENTIFIED AS PER DRAWINGS AND SPECIFICATIONS.	IP	C.S	03-Mar-2014
RECEPTACLES ENERGIZED, POLARITIES CONFIRMED, WIRE TAGS AND PANEL SCHEDULE CIRCUITS VERIFIED.	IP	C.S	03-Mar-2014
UPS RECEPTACLES TESTED FOR PROPER OPERATION.	NA	C.S	03-Mar-2014
GFCI RECEPTACLES WHERE REQUIRED.	IP	C.S	03-Mar-2014

NOTES

TECHNICIAN SIGNATURE:		NAME:	Cory Sheppard	DATE:	03-Mar-2014
CLIENT REP. SIGNATURE:		NAME:	Barry Nimman.	DATE:	24-4-14

2-1.2

112. GROUNDING CHECKLIST

TARPON

ELECTRIC & CONTROLS DIVISION - (E&C): [X]	TARPON CONSTRUCTION MANAGEMENT - (TCM): [ ]

CLIENT NAME:	Devon	E-TICKET #:		JOB #:	13010163B
BRANCH LOCATION:	01 Edmonton	LOCATION/LSD:	5 Blue		

EQUIP. TAG NO.:	Grounding	EQUIPMENT LOCATION:	Interior
DRAWING NUMBER:	LAY-1600-03	CSA OR EQUIV.:	Yes

STATUS: IP - INSPECTION PASS N/A - NOT APPLICABLE B/O - BY OTHERS	STATUS	INITIAL	DATE
CONFIRM ALL PRIMARY AND TAP CONDUCTOR SIZES, TO DRAWINGS AND SPECIFICATIONS.	IP	C.S.	03-Mar-2014
CABLE TRAY GROUNDED AS PER DRAWINGS AND SPECIFICATIONS.	IP	C.S.	03-Mar-2014
VERIFY ALL TRANSFORMER NEUTRAL GROUNDS, CONFIRM CONNECTIONS.	NA	C.S.	03-Mar-2014
VERIFY ALL GROUND RESISTOR CONNECTIONS, CONFIRM CONNECTIONS.	NA	C.S.	03-Mar-2014
VERIFY ALL ELECTRICAL EQUIPMENT GROUNDS, CONFIRM CONNECTIONS.	IP	C.S.	03-Mar-2014
VERIFY ALL VESSELS, TANKS AND STRUCTURAL STEEL GROUNDS.	IP	C.S.	03-Mar-2014
ENSURE LIGHTNING ARRESTORS ARE DONE AS PER SPECIFICATIONS AND DETAILS.	IP	C.S.	03-Mar-2014
ENSURE ALL BOLTED AND COMPRESSION TYPE CONNECTIONS ARE AS PER MANUFACTURER'S SPECIFICATIONS.	IP	C.S.	03-Mar-2014
CONNECTIONS ARE TO BE GLYPTOLED AND TAPED AS PER DETAILS AND SPECIFICATIONS.	IP	C.S.	03-Mar-2014
CHECK TRENCHES: LENGTH/DEPTH & ROUTING AS PER DRAWINGS, DETAILS AND SPECIFICATIONS.	NA	C.S.	03-Mar-2014
CHECK LOCATION AND QUANTITY OF GROUND RODS AS PER DRAWINGS.	NA	C.S.	03-Mar-2014
CHECK GROUND ROD TYPE, LENGTH AND DIAMETER VERIFIED TO DRAWINGS AND SPECIFICATIONS.	NA	C.S.	03-Mar-2014
CHECK GROUNDING SLEEVES FOR TYPE OF MATERIAL AND SUPPORT.	NA	C.S.	03-Mar-2014
CHECK GROUND WELLS/ELEVATION AS PER DETAILS.	NA	C.S.	03-Mar-2014
VERIFY THAT THE SUB STATION FENCE AND GATES ARE PROPERLY GROUNDED AS PER DETAILS AND CODE.	NA	C.S.	03-Mar-2014
ENSURE ALL AS BUILT DRAWINGS (U.G. REVISIONS) ARE UP TO DATE UPON COMPLETION.	IP	C.S.	03-Mar-2014
ENSURE ALL GROUND ELECTRODE TESTS COMPLETED. (IF APPLICABLE USE FORM 307)	B/O	C.S.	03-Mar-2014

NOTES:

TECHNICIAN SIGNATURE:		NAME:	Cory Sheppard	DATE:	03-Mar-2014
CLIENT REP. SIGNATURE:		NAME:	Barry Nimmon	DATE:	24-4-14

2-1.3

102. CABLE INSTALLED CHECKLIST

TARPON

ELECTRIC & CONTROLS DIVISION - (E&C): [X]	TARPON CONSTRUCTION MANAGEMENT - (TCM): [ ]

CLIENT NAME:	Devon	E-TICKET #:		JOB #:	13010163B
BRANCH LOCATION:	01 Edmonton	LOCATION/LSD:	5 Blue		

TEST EQUIPMENT DATA

MANUFACTURER:	Fluke	MODEL NO.:	1587
TYPE:	Insulation Multimeter	TEST RANGE:	N/A
CALIBRATION CERTIFICATE NO.:		CALIBRATION DATE:	

STATUS: IP - INSPECTION PASS N/A - NOT APPLICABLE B/O - BY OTHERS		STATUS	INITIAL	DATE
VERIFY THE CABLE TYPE AND SIZE TO THE CURRENT CABLE SCHEDULE.		IP	C.S.	03-Mar-2014
CHECK FOR ANY MECHANICAL DAMAGE OR DETERIORATION TO THE CABLE INSULATION.		IP	C.S.	03-Mar-2014
ENSURE CABLE IS PROPERLY TRAINED AND SECURED TO RACEWAY AS PER SPECIFICATIONS.		IP	C.S.	03-Mar-2014
CHECK CABLE BENDING RADIUS AND MECHANICAL PROTECTION, AS PER CODE.		IP	C.S.	03-Mar-2014
VERIFY THAT THE CABLE CONNECTOR / BUSHINGS ARE OF THE PROPER TYPE AND SIZE AS SPECIFIED. CONFIRM AREA CLASSIFICATION AND SEALS (IF REQUIRED).		IP	C.S.	03-Mar-2014
CONFIRM ROUTING, SEGREGATION, AND SOURCE / DESTINATION TO DRAWINGS, DETAILS, AND SPECIFICATIONS.		IP	C.S.	03-Mar-2014
CHECK FOR PROPER SUPPORT FOR CABLES IN SWITCHGEAR, MOTOR CONTROL CENTRES, POWER PANELS, CABLE TRAYS, AND CONDUIT, AS PER DETAILS.		IP	C.S.	03-Mar-2014
ENSURE THE CABLE GROUND AND SHEATH BONDING IS SECURELY FASTENED.		IP	C.S.	03-Mar-2014
CHECK FOR TIGHTNESS OF CONNECTIONS AND TERMINATIONS.		IP	C.S.	03-Mar-2014
CONFIRM SOURCE / DESTINATION ARE CONSISTENT WITH THE DRAWINGS, AND THAT PROPER CABLE TAGS ARE IN PLACE.		IP	C.S.	03-Mar-2014
CABLE POINT TO POINT CHECK COMPLETED. CONFIRM THAT SOURCE, DESTINATION, AND CORE NUMBERS MATCH, AND ARE CONSISTENT WITH THE DRAWINGS.	Attach Cable Schedule / IO Drawings with *Yellow* *Hi-lites*	IP	C.S.	03-Mar-2014
POWER CABLE MEGGER CHECKS COMPLETED, CONFIRM SOURCE AND DESTINATION ARE CONSISTENT WITH THE DRAWINGS, FORMS TEC-Q-F-0116 AND TEC-Q-F-0119.	Attach Cable Schedule / Single Lines with *Green* *Hi-lites*	IP	C.S.	03-Mar-2014
CABLES VERIFIED AND ROLLED BACK, POINT TO POINT CHECKS TO BE FIELD COMPLETED.	Attach Cable Schedule with *Orange* *Hi-lites*	NA	C.S.	03-Mar-2014
POWER CABLES VERIFIED AND ROLLED BACK, MEGGER CHECKS TO BE FIELD COMPLETED.	Attach Cable Schedule with *Pink* *Hi-lites*	B/O	C.S.	03-Mar-2014

NOTES

TECHNICIAN SIGNATURE:		NAME:	Cory Sheppard	DATE:	03-Mar-2014
CLIENT REP. SIGNATURE:		NAME:	Barry Dimmar	DATE:	24-4-14

2-1.4

109. CONTROL PANEL/ JB CHECKLIST

TARPON

ELECTRIC & CONTROLS DIVISION - (E&C):	X	TARPON CONSTRUCTION MANAGEMENT - (TCM):	

CLIENT NAME:	Devon	E-TICKET #:		JOB #:	13010163B
BRANCH LOCATION:	01 Edmonton	LOCATION/LSD:	5 Blue		

EQUIP. TAG NO.:	JBDA-1605	EQUIPMENT LOCATION:	Exterior	NEMA:	Yes
MANUFACTURER:	Hoffman	CSA OR EQUIV.:	Yes	MODEL NO.:	A24H2412GQRLP

STATUS: IP - INSPECTION PASS N/A - NOT APPLICABLE B/O - BY OTHERS	STATUS	INITIAL	DATE
CHECK NAMEPLATE DATA, TYPE AND RATING AGAINST THE DRAWINGS, DETAILS AND SPECIFICATIONS. ENSURE CSA OR EQUIVALENT CERTIFICATION IS IN PLACE.	IP	C.S	03-Mar-2014
CHECK FOR MISSING COMPONENTS, SHIPPING DAMAGE AND CORROSION.	IP	C.S	03-Mar-2014
SHOP INSPECTION / MATERIAL RECEIVING ACCEPTANCE REPORT COMPLETE.	B/O	C.S	03-Mar-2014
VERIFY EQUIPMENT LOCATION, INSTALLATION AND MOUNTING AS PER DETAIL AND DRAWINGS.	IP	C.S	03-Mar-2014
CONFIRM EQUIPMENT GROUNDING AS PER DRAWINGS AND SPECIFICATIONS.	IP	C.S	03-Mar-2014
ENSURE DOOR / BACK PAN IS BONDED IF ELECTRICAL EQUIPMENT IS MOUNTED TO IT.	IP	C.S	03-Mar-2014
ENSURE CABLE ENTRIES ARE LIMITED TO BOTTOM ENTRY WHERE POSSIBLE.	IP	C.S	03-Mar-2014
ENSURE EQUIPMENT INSTALLED AND TERMINAL STRIPS, ARE PROPERLY SIZED AND IDENTIFIED ACCORDING TO DETAILS, DRAWINGS AND SPECIFICATIONS.	IP	C.S	03-Mar-2014
VERIFY ALL CONTROL TERMINATIONS AND WIRE TAGS AS PER APPROVED DRAWINGS AND SPECIFICATIONS.	IP	C.S	03-Mar-2014
ENSURE THAT INTERNAL WIRING IS TRAINED AND TY-WRAPPED NEATLY.	IP	C.S	03-Mar-2014
ENSURE ALL FUSES / MCB'S ARE CORRECT RATING AS PER DETAILS AND DRAWINGS.	NA	C.S	03-Mar-2014
CHECK ANTI-CONDENSATION HEATER AND THERMOSTATS ARE INSTALLED CORRECTLY.	NA	C.S	03-Mar-2014
CHECK FUNCTION OF ALL SWITCHING DEVICES, LIGHTS AND RELAYS.	NA	C.S	03-Mar-2014
CHECK FOR TIGHTNESS OF ALL TERMINATION BLOCKS.	IP	C.S	03-Mar-2014
CHECK FOR BREATHER AND DRAIN, IF SPECIFIED.	IP	C.S	03-Mar-2014
ENSURE MULTIPLE POWER SOURCES WITHIN THE SAME ENCLOSURE ARE PROPERLY IDENTIFIED AS PER CODE.	IP	C.S	03-Mar-2014
ENSURE ALL COMPARTMENTS ARE CLEAN AND ALL COVERS ARE IN PLACE.	IP	C.S	03-Mar-2014
ENSURE ALL AS BUILT DRAWINGS, ARE UP TO DATE UPON COMPLETION.	IP	C.S	03-Mar-2014

NOTES:

TECHNICIAN SIGNATURE:		NAME:	Cory Sheppard	DATE:	03-Mar-2014
CLIENT REP. SIGNATURE:		NAME:	Barry Dinman	DATE:	24-4-14.

109. CONTROL PANEL/ JB CHECKLIST

TARPON

ELECTRIC & CONTROLS DIVISION - (E&C):	X	TARPON CONSTRUCTION MANAGEMENT - (TCM):	

CLIENT NAME:	Devon	E-TICKET #:		JOB #:	13010163B
BRANCH LOCATION:	01 Edmonton	LOCATION/LSD:	5 Blue		

EQUIP. TAG NO.:	JBC-1601	EQUIPMENT LOCATION:	Exterior	NEMA:	Yes
MANUFACTURER:	Hoffman	CSA OR EQUIV.:	Yes	MODEL NO.:	A20H1610GQRLP

STATUS: IP - INSPECTION PASS N/A - NOT APPLICABLE B/O - BY OTHERS	STATUS	INITIAL	DATE
CHECK NAMEPLATE DATA, TYPE AND RATING AGAINST THE DRAWINGS, DETAILS AND SPECIFICATIONS. ENSURE CSA OR EQUIVALENT CERTIFICATION IS IN PLACE.	IP	C.S	03-Mar-2014
CHECK FOR MISSING COMPONENTS, SHIPPING DAMAGE AND CORROSION.	IP	C.S	03-Mar-2014
SHOP INSPECTION / MATERIAL RECEIVING ACCEPTANCE REPORT COMPLETE.	B/O	C.S	03-Mar-2014
VERIFY EQUIPMENT LOCATION, INSTALLATION AND MOUNTING AS PER DETAIL AND DRAWINGS.	IP	C.S	03-Mar-2014
CONFIRM EQUIPMENT GROUNDING AS PER DRAWINGS AND SPECIFICATIONS.	IP	C.S	03-Mar-2014
ENSURE DOOR / BACK PAN IS BONDED IF ELECTRICAL EQUIPMENT IS MOUNTED TO IT.	IP	C.S	03-Mar-2014
ENSURE CABLE ENTRIES ARE LIMITED TO BOTTOM ENTRY WHERE POSSIBLE.	IP	C.S	03-Mar-2014
ENSURE EQUIPMENT INSTALLED AND TERMINAL STRIPS, ARE PROPERLY SIZED AND IDENTIFIED ACCORDING TO DETAILS, DRAWINGS AND SPECIFICATIONS.	IP	C.S	03-Mar-2014
VERIFY ALL CONTROL TERMINATIONS AND WIRE TAGS AS PER APPROVED DRAWINGS AND SPECIFICATIONS.	IP	C.S	03-Mar-2014
ENSURE THAT INTERNAL WIRING IS TRAINED AND TY-WRAPPED NEATLY.	IP	C.S	03-Mar-2014
ENSURE ALL FUSES / MCB'S ARE CORRECT RATING AS PER DETAILS AND DRAWINGS.	NA	C.S	03-Mar-2014
CHECK ANTI-CONDENSATION HEATER AND THERMOSTATS ARE INSTALLED CORRECTLY.	NA	C.S	03-Mar-2014
CHECK FUNCTION OF ALL SWITCHING DEVICES, LIGHTS AND RELAYS.	NA	C.S	03-Mar-2014
CHECK FOR TIGHTNESS OF ALL TERMINATION BLOCKS.	IP	C.S	03-Mar-2014
CHECK FOR BREATHER AND DRAIN, IF SPECIFIED.	IP	C.S	03-Mar-2014
ENSURE MULTIPLE POWER SOURCES WITHIN THE SAME ENCLOSURE ARE PROPERLY IDENTIFIED AS PER CODE.	IP	C.S	03-Mar-2014
ENSURE ALL COMPARTMENTS ARE CLEAN AND ALL COVERS ARE IN PLACE.	IP	C.S	03-Mar-2014
ENSURE ALL AS BUILT DRAWINGS, ARE UP TO DATE UPON COMPLETION.	IP	C.S	03-Mar-2014

NOTES:

TECHNICIAN SIGNATURE:		NAME:	Cory Sheppard	DATE:	03-Mar-2014
CLIENT REP. SIGNATURE:		NAME:	Barry Dimman	DATE:	24-4-14

109. CONTROL PANEL/ JB CHECKLIST

ELECTRIC & CONTROLS DIVISION - (E&C):	X	TARPON CONSTRUCTION MANAGEMENT - (TCM):	

CLIENT NAME:	Devon	E-TICKET #:		JOB #:	13010163B
BRANCH LOCATION:	01 Edmonton	LOCATION/LSD:	5 Blue		

EQUIP. TAG NO.:	JBE-1602	EQUIPMENT LOCATION:	Exterior	NEMA:	Yes
MANUFACTURER:	Hoffman	CSA OR EQUIV.:	Yes	MODEL NO.:	A20H1610GQRLP

STATUS: IP - INSPECTION PASS N/A - NOT APPLICABLE B/O - BY OTHERS	STATUS	INITIAL	DATE
CHECK NAMEPLATE DATA, TYPE AND RATING AGAINST THE DRAWINGS, DETAILS AND SPECIFICATIONS. ENSURE CSA OR EQUIVALENT CERTIFICATION IS IN PLACE.	IP	C.S	03-Mar-2014
CHECK FOR MISSING COMPONENTS, SHIPPING DAMAGE AND CORROSION.	IP	C.S	03-Mar-2014
SHOP INSPECTION / MATERIAL RECEIVING ACCEPTANCE REPORT COMPLETE.	B/O	C.S	03-Mar-2014
VERIFY EQUIPMENT LOCATION, INSTALLATION AND MOUNTING AS PER DETAIL AND DRAWINGS.	IP	C.S	03-Mar-2014
CONFIRM EQUIPMENT GROUNDING AS PER DRAWINGS AND SPECIFICATIONS.	IP	C.S	03-Mar-2014
ENSURE DOOR / BACK PAN IS BONDED IF ELECTRICAL EQUIPMENT IS MOUNTED TO IT.	IP	C.S	03-Mar-2014
ENSURE CABLE ENTRIES ARE LIMITED TO BOTTOM ENTRY WHERE POSSIBLE.	IP	C.S	03-Mar-2014
ENSURE EQUIPMENT INSTALLED AND TERMINAL STRIPS, ARE PROPERLY SIZED AND IDENTIFIED ACCORDING TO DETAILS, DRAWINGS AND SPECIFICATIONS.	IP	C.S	03-Mar-2014
VERIFY ALL CONTROL TERMINATIONS AND WIRE TAGS AS PER APPROVED DRAWINGS AND SPECIFICATIONS.	IP	C.S	03-Mar-2014
ENSURE THAT INTERNAL WIRING IS TRAINED AND TY-WRAPPED NEATLY.	IP	C.S	03-Mar-2014
ENSURE ALL FUSES / MCB'S ARE CORRECT RATING AS PER DETAILS AND DRAWINGS.	NA	C.S	03-Mar-2014
CHECK ANTI-CONDENSATION HEATER AND THERMOSTATS ARE INSTALLED CORRECTLY.	NA	C.S	03-Mar-2014
CHECK FUNCTION OF ALL SWITCHING DEVICES, LIGHTS AND RELAYS.	NA	C.S	03-Mar-2014
CHECK FOR TIGHTNESS OF ALL TERMINATION BLOCKS.	IP	C.S	03-Mar-2014
CHECK FOR BREATHER AND DRAIN, IF SPECIFIED.	IP	C.S	03-Mar-2014
ENSURE MULTIPLE POWER SOURCES WITHIN THE SAME ENCLOSURE ARE PROPERLY IDENTIFIED AS PER CODE.	IP	C.S	03-Mar-2014
ENSURE ALL COMPARTMENTS ARE CLEAN AND ALL COVERS ARE IN PLACE.	IP	C.S	03-Mar-2014
ENSURE ALL AS BUILT DRAWINGS, ARE UP TO DATE UPON COMPLETION.	IP	C.S	03-Mar-2014

NOTES:

TECHNICIAN SIGNATURE:		NAME:	Cory Sheppard	DATE:	03-Mar-2014
CLIENT REP. SIGNATURE:		NAME:	Barry Dimmon	DATE:	24-4-14

109. CONTROL PANEL/ JB CHECKLIST

TARPON

ELECTRIC & CONTROLS DIVISION - (E&C):	X	TARPON CONSTRUCTION MANAGEMENT - (TCM):	

CLIENT NAME:	Devon	E-TICKET #:		JOB #:	13010163B
BRANCH LOCATION:	01 Edmonton	LOCATION/LSD:	5 Blue		

EQUIP. TAG NO.:	JBF-1609	EQUIPMENT LOCATION:	Exterior	NEMA:	Yes
MANUFACTURER:	Hoffman	CSA OR EQUIV.:	Yes	MODEL NO.:	A24H2412GQRLP

STATUS: IP - INSPECTION PASS N/A - NOT APPLICABLE B/O - BY OTHERS	STATUS	INITIAL	DATE
CHECK NAMEPLATE DATA, TYPE AND RATING AGAINST THE DRAWINGS, DETAILS AND SPECIFICATIONS. ENSURE CSA OR EQUIVALENT CERTIFICATION IS IN PLACE.	IP	C.S	03-Mar-2014
CHECK FOR MISSING COMPONENTS, SHIPPING DAMAGE AND CORROSION.	IP	C.S	03-Mar-2014
SHOP INSPECTION / MATERIAL RECEIVING ACCEPTANCE REPORT COMPLETE.	B/O	C.S	03-Mar-2014
VERIFY EQUIPMENT LOCATION, INSTALLATION AND MOUNTING AS PER DETAIL AND DRAWINGS.	IP	C.S	03-Mar-2014
CONFIRM EQUIPMENT GROUNDING AS PER DRAWINGS AND SPECIFICATIONS.	IP	C.S	03-Mar-2014
ENSURE DOOR / BACK PAN IS BONDED IF ELECTRICAL EQUIPMENT IS MOUNTED TO IT.	IP	C.S	03-Mar-2014
ENSURE CABLE ENTRIES ARE LIMITED TO BOTTOM ENTRY WHERE POSSIBLE.	IP	C.S	03-Mar-2014
ENSURE EQUIPMENT INSTALLED AND TERMINAL STRIPS, ARE PROPERLY SIZED AND IDENTIFIED ACCORDING TO DETAILS, DRAWINGS AND SPECIFICATIONS.	IP	C.S	03-Mar-2014
VERIFY ALL CONTROL TERMINATIONS AND WIRE TAGS AS PER APPROVED DRAWINGS AND SPECIFICATIONS.	IP	C.S	03-Mar-2014
ENSURE THAT INTERNAL WIRING IS TRAINED AND TY-WRAPPED NEATLY.	IP	C.S	03-Mar-2014
ENSURE ALL FUSES / MCB'S ARE CORRECT RATING AS PER DETAILS AND DRAWINGS.	NA	C.S	03-Mar-2014
CHECK ANTI-CONDENSATION HEATER AND THERMOSTATS ARE INSTALLED CORRECTLY.	NA	C.S	03-Mar-2014
CHECK FUNCTION OF ALL SWITCHING DEVICES, LIGHTS AND RELAYS.	NA	C.S	03-Mar-2014
CHECK FOR TIGHTNESS OF ALL TERMINATION BLOCKS.	IP	C.S	03-Mar-2014
CHECK FOR BREATHER AND DRAIN, IF SPECIFIED.	IP	C.S	03-Mar-2014
ENSURE MULTIPLE POWER SOURCES WITHIN THE SAME ENCLOSURE ARE PROPERLY IDENTIFIED AS PER CODE.	IP	C.S	03-Mar-2014
ENSURE ALL COMPARTMENTS ARE CLEAN AND ALL COVERS ARE IN PLACE.	IP	C.S	03-Mar-2014
ENSURE ALL AS BUILT DRAWINGS, ARE UP TO DATE UPON COMPLETION.	IP	C.S	03-Mar-2014

NOTES:

TECHNICIAN SIGNATURE:		NAME:	Cory Sheppard	DATE:	03-Mar-2014
CLIENT REP. SIGNATURE:		NAME:	Barry Nimman	DATE:	24-4-14

2-1.5

102. CABLE INSTALLED CHECKLIST

ELECTRIC & CONTROLS DIVISION - (E&C):	X	TARPON CONSTRUCTION MANAGEMENT - (TCM):	

CLIENT NAME:	Devon	E-TICKET #:		JOB #:	13010163B
BRANCH LOCATION:	01 Edmonton	LOCATION/LSD:	5 Blue		

TEST EQUIPMENT DATA

MANUFACTURER:	Fluke	MODEL NO.:	1587
TYPE:	Insulation Multimeter	TEST RANGE:	N/A
CALIBRATION CERTIFICATE NO.:		CALIBRATION DATE:	

STATUS: IP - INSPECTION PASS N/A - NOT APPLICABLE B/O - BY OTHERS		STATUS	INITIAL	DATE
VERIFY THE CABLE TYPE AND SIZE TO THE CURRENT CABLE SCHEDULE.		IP	C.S.	03-Mar-2014
CHECK FOR ANY MECHANICAL DAMAGE OR DETERIORATION TO THE CABLE INSULATION.		IP	C.S.	03-Mar-2014
ENSURE CABLE IS PROPERLY TRAINED AND SECURED TO RACEWAY AS PER SPECIFICATIONS.		IP	C.S.	03-Mar-2014
CHECK CABLE BENDING RADIUS AND MECHANICAL PROTECTION, AS PER CODE.		IP	C.S.	03-Mar-2014
VERIFY THAT THE CABLE CONNECTOR / BUSHINGS ARE OF THE PROPER TYPE AND SIZE AS SPECIFIED. CONFIRM AREA CLASSIFICATION AND SEALS (IF REQUIRED).		IP	C.S.	03-Mar-2014
CONFIRM ROUTING, SEGREGATION, AND SOURCE / DESTINATION TO DRAWINGS, DETAILS, AND SPECIFICATIONS.		IP	C.S.	03-Mar-2014
CHECK FOR PROPER SUPPORT FOR CABLES IN SWITCHGEAR, MOTOR CONTROL CENTRES, POWER PANELS, CABLE TRAYS, AND CONDUIT, AS PER DETAILS.		IP	C.S.	03-Mar-2014
ENSURE THE CABLE GROUND AND SHEATH BONDING IS SECURELY FASTENED.		IP	C.S.	03-Mar-2014
CHECK FOR TIGHTNESS OF CONNECTIONS AND TERMINATIONS.		IP	C.S.	03-Mar-2014
CONFIRM SOURCE / DESTINATION ARE CONSISTENT WITH THE DRAWINGS, AND THAT PROPER CABLE TAGS ARE IN PLACE.		IP	C.S.	03-Mar-2014
CABLE POINT TO POINT CHECK COMPLETED. CONFIRM THAT SOURCE, DESTINATION, AND CORE NUMBERS MATCH, AND ARE CONSISTENT WITH THE DRAWINGS.	Attach Cable Schedule / IO Drawings with *Yellow Hi-lites*	IP	C.S.	03-Mar-2014
POWER CABLE MEGGER CHECKS COMPLETED, CONFIRM SOURCE AND DESTINATION ARE CONSISTENT WITH THE DRAWINGS, FORMS TEC-Q-F-0116 AND TEC-Q-F-0119.	Attach Cable Schedule / Single Lines with *Green Hi-lites*	IP	C.S.	03-Mar-2014
CABLES VERIFIED AND ROLLED BACK, POINT TO POINT CHECKS TO BE FIELD COMPLETED.	Attach Cable Schedule with *Orange Hi-lites*	NA	C.S.	03-Mar-2014
POWER CABLES VERIFIED AND ROLLED BACK, MEGGER CHECKS TO BE FIELD COMPLETED.	Attach Cable Schedule with *Pink Hi-lites*	B/O	C.S.	03-Mar-2014

NOTES

TECHNICIAN SIGNATURE:		NAME:	Cory Sheppard	DATE:	03-Mar-2014
CLIENT REP. SIGNATURE:		NAME:	Barry Nimman	DATE:	24-4-14

116. LV - POWER CABLE CHECKLIST (750V & LESS)

ELECTRIC & CONTROLS DIVISION - (E&C): [X]		TARPON CONSTRUCTION MANAGEMENT - (TCM): [ ]			
CLIENT NAME:	Devon	E-TICKET #:		JOB #:	13010163B
BRANCH LOCATION:	01 Edmonton	LOCATION/LSD:	5 Blue		

CABLE TAG NO.:	See attached page			CABLE SOURCE LOCATION:	JBDA-1605
MANUFACTURER:	Deca	CSA OR EQUIV.:	Yes	SIZE/VOLTAGE RATING:	#18 / 300V

STATUS: IP - INSPECTION PASS N/A - NOT APPLICABLE B/O - BY OTHERS	STATUS	INITIAL	DATE
VERIFY THE CABLE TYPE AND SIZE TO THE CURRENT CABLE DRAWINGS, SPECIFICATIONS AND CODE.	IP	C.S	03-Mar-2014
CHECK FOR ANY MECHANICAL DAMAGE OR DETERIORATION TO THE CABLE INSULATION.	IP	C.S	03-Mar-2014
ENSURE CABLE IS PROPERLY TRAINED AND SECURED TO RACEWAY AS PER SPECIFICATIONS.	IP	C.S	03-Mar-2014
ENSURE CABLE BEND RADIUS DOES NO EXCEED CODE OR SPECIFICATIONS.	IP	C.S	03-Mar-2014
VERIFY THAT THE CABLE CONNECTOR / BUSHINGS ARE OF THE PROPER TYPE AND SIZE AS SPECIFIED. CONFIRM AREA CLASSIFICATION AND SEALS (IF REQUIRED).	IP	C.S	03-Mar-2014
CHECK FOR THE PROPER SUPPORT OF CABLES AT ALL ELECTRICAL EQUIPMENT LOCATIONS, AS PER DETAILS, SPECIFICATIONS AND CODE.	IP	C.S	03-Mar-2014
VERIFY ARMOUR AND/OR SHIELD/SHEATH BONDING AND GROUNDING AS PER CODE.	IP	C.S	03-Mar-2014
ENSURE CABLE CORE LABELLING, CONDUCTOR NUMBERING AND PHASING AS PER DRAWINGS.	IP	C.S	03-Mar-2014
CONFIRM SOURCE/DESTINATION ARE CONSISTENT WITH THE DRAWINGS, AND THAT PROPER CABLE TAGS ARE IN PLACE.	IP	C.S	03-Mar-2014
ENSURE PARALLEL FEEDERS ARE PROPERLY PHASE SEQUENCED AND SAME LENGTH.	NA	C.S	03-Mar-2014
INSPECT COMPRESSION TYPE APPLIED CONNECTORS FOR CORRECT CABLE MATCH.	NA	C.S	03-Mar-2014
PERFORM MEGGER TESTS WITH EQUIPMENT OPEN, ISOLATED OR DISCONNECTED.	IP	C.S	03-Mar-2014
ENSURE CABLE IS PROPERLY DE-ENERGIZED UPON COMPLETION OF TESTS.	IP	C.S	03-Mar-2014
CONFIRM CONDUCTORS ARE TERMINATED AS PER DRAWINGS.	IP	C.S	03-Mar-2014
CHECK FOR TIGHTNESS OF CONNECTIONS AND TERMINATIONS, **TORQUE TO SPECIFICATIONS.**	IP	C.S	03-Mar-2014

NOTES:

116. LV - POWER CABLE CHECKLIST (750V & LESS)

TARPON

MEGGER EQUIPMENT DATA

MANUFACTURER:	Fluke	MODEL NO.:	1587		
CALIBRATION CERTIFICATE NO.:		TEST RANGE:		CALIBRATION DATE:	

PRIMARY (NOTE: DE-ENERGIZE UPON COMPLETION OF TEST)

TESTING VOLTAGE	Φ TO GROUND (IN M/G Ω)				Φ TO Φ (IN M/G Ω)					
	A	B	C	N	AB	BC	CA	AN	BN	CN
1000V	2.2G	2.2G	NA	NA	NA	NA	NA	NA	NA	NA

TORQUE EQUIPMENT DATA

MANUFACTURER:		MODEL NO.:			
CALIBRATION CERTIFICATE NO.:		TEST RANGE:		CALIBRATION DATE:	

TORQUE DESCRIPTION : _____

CONNECTIONS	Ph.A	Ph.B	Ph.C	Neutral	Ground
BOLT SIZE					
MFG. TORQUE VALUE					
DATE TORQUED					

TORQUE DESCRIPTION : _____

CONNECTIONS	Ph.A	Ph.B	Ph.C	Neutral	Ground
BOLT SIZE					
MFG. TORQUE VALUE					
DATE TORQUED					

NOTES:

TECHNICIAN SIGNATURE:		NAME:	Cory Sheppard	DATE:	03-Mar-2014
CLIENT REP. SIGNATURE:		NAME:	Barry Nimman	DATE:	24-4-14.

116. LV - POWER CABLE CHECKLIST (750V & LESS)

ELECTRIC & CONTROLS DIVISION - (E&C): [X]		TARPON CONSTRUCTION MANAGEMENT - (TCM): [ ]			
CLIENT NAME:	Devon	E-TICKET #:		JOB #:	13010163B
BRANCH LOCATION:	01 Edmonton	LOCATION/LSD:	5 Blue		

CABLE TAG NO.:	See attached page			CABLE SOURCE LOCATION:	JBF-1609
MANUFACTURER:	Deca	CSA OR EQUIV.:	Yes	SIZE/VOLTAGE RATING:	#14 / 600V

STATUS: IP - INSPECTION PASS N/A - NOT APPLICABLE B/O - BY OTHERS	STATUS	INITIAL	DATE
VERIFY THE CABLE TYPE AND SIZE TO THE CURRENT CABLE DRAWINGS, SPECIFICATIONS AND CODE.	IP	C.S	03-Mar-2014
CHECK FOR ANY MECHANICAL DAMAGE OR DETERIORATION TO THE CABLE INSULATION.	IP	C.S	03-Mar-2014
ENSURE CABLE IS PROPERLY TRAINED AND SECURED TO RACEWAY AS PER SPECIFICATIONS.	IP	C.S	03-Mar-2014
ENSURE CABLE BEND RADIUS DOES NO EXCEED CODE OR SPECIFICATIONS.	IP	C.S	03-Mar-2014
VERIFY THAT THE CABLE CONNECTOR / BUSHINGS ARE OF THE PROPER TYPE AND SIZE AS SPECIFIED. CONFIRM AREA CLASSIFICATION AND SEALS (IF REQUIRED).	IP	C.S	03-Mar-2014
CHECK FOR THE PROPER SUPPORT OF CABLES AT ALL ELECTRICAL EQUIPMENT LOCATIONS, AS PER DETAILS, SPECIFICATIONS AND CODE.	IP	C.S	03-Mar-2014
VERIFY ARMOUR AND/OR SHIELD/SHEATH BONDING AND GROUNDING AS PER CODE.	IP	C.S	03-Mar-2014
ENSURE CABLE CORE LABELLING, CONDUCTOR NUMBERING AND PHASING AS PER DRAWINGS.	IP	C.S	03-Mar-2014
CONFIRM SOURCE/DESTINATION ARE CONSISTENT WITH THE DRAWINGS, AND THAT PROPER CABLE TAGS ARE IN PLACE.	IP	C.S	03-Mar-2014
ENSURE PARALLEL FEEDERS ARE PROPERLY PHASE SEQUENCED AND SAME LENGTH.	NA	C.S	03-Mar-2014
INSPECT COMPRESSION TYPE APPLIED CONNECTORS FOR CORRECT CABLE MATCH.	NA	C.S	03-Mar-2014
PERFORM MEGGER TESTS WITH EQUIPMENT OPEN, ISOLATED OR DISCONNECTED.	IP	C.S	03-Mar-2014
ENSURE CABLE IS PROPERLY DE-ENERGIZED UPON COMPLETION OF TESTS.	IP	C.S	03-Mar-2014
CONFIRM CONDUCTORS ARE TERMINATED AS PER DRAWINGS.	IP	C.S	03-Mar-2014
CHECK FOR TIGHTNESS OF CONNECTIONS AND TERMINATIONS, **TORQUE TO SPECIFICATIONS.**	IP	C.S	03-Mar-2014

NOTES:

116. LV - POWER CABLE CHECKLIST (750V & LESS)

TARPON

MEGGER EQUIPMENT DATA

MANUFACTURER:	Fluke	MODEL NO.:	1587		
CALIBRATION CERTIFICATE NO.:		TEST RANGE:		CALIBRATION DATE:	

PRIMARY (NOTE: DE-ENERGIZE UPON COMPLETION OF TEST)

TESTING VOLTAGE	Φ TO GROUND (IN M/G Ω)				Φ TO Φ (IN M/G Ω)					
	A	B	C	N	AB	BC	CA	AN	BN	CN
1000V	2.2G	2.2G	NA	NA	NA	NA	NA	NA	NA	NA

TORQUE EQUIPMENT DATA

MANUFACTURER:		MODEL NO.:			
CALIBRATION CERTIFICATE NO.:		TEST RANGE:		CALIBRATION DATE:	

TORQUE DESCRIPTION : _____

CONNECTIONS	Ph.A	Ph.B	Ph.C	Neutral	Ground
BOLT SIZE					
MFG. TORQUE VALUE					
DATE TORQUED					

TORQUE DESCRIPTION : _____

CONNECTIONS	Ph.A	Ph.B	Ph.C	Neutral	Ground
BOLT SIZE					
MFG. TORQUE VALUE					
DATE TORQUED					

NOTES:

TECHNICIAN SIGNATURE:		NAME:	Cory Sheppard	DATE:	03-Mar-2014
CLIENT REP. SIGNATURE:		NAME:	Barry Norman	DATE:	24-4-14

116. LV - POWER CABLE CHECKLIST (750V & LESS)

ELECTRIC & CONTROLS DIVISION - (E&C):	☒	TARPON CONSTRUCTION MANAGEMENT - (TCM):	☐		
CLIENT NAME:	Devon	E-TICKET #:		JOB #:	13010163B
BRANCH LOCATION:	01 Edmonton	LOCATION/LSD:	5 Blue		

CABLE TAG NO.:	See attached page			CABLE SOURCE LOCATION:	JBC-1601
MANUFACTURER:	Deca	CSA OR EQUIV.:	Yes	SIZE/VOLTAGE RATING:	#12 / 600V

STATUS: IP - INSPECTION PASS N/A - NOT APPLICABLE B/O - BY OTHERS	STATUS	INITIAL	DATE
VERIFY THE CABLE TYPE AND SIZE TO THE CURRENT CABLE DRAWINGS, SPECIFICATIONS AND CODE.	IP	C.S	03-Mar-2014
CHECK FOR ANY MECHANICAL DAMAGE OR DETERIORATION TO THE CABLE INSULATION.	IP	C.S	03-Mar-2014
ENSURE CABLE IS PROPERLY TRAINED AND SECURED TO RACEWAY AS PER SPECIFICATIONS.	IP	C.S	03-Mar-2014
ENSURE CABLE BEND RADIUS DOES NO EXCEED CODE OR SPECIFICATIONS.	IP	C.S	03-Mar-2014
VERIFY THAT THE CABLE CONNECTOR / BUSHINGS ARE OF THE PROPER TYPE AND SIZE AS SPECIFIED. CONFIRM AREA CLASSIFICATION AND SEALS (IF REQUIRED).	IP	C.S	03-Mar-2014
CHECK FOR THE PROPER SUPPORT OF CABLES AT ALL ELECTRICAL EQUIPMENT LOCATIONS, AS PER DETAILS, SPECIFICATIONS AND CODE.	IP	C.S	03-Mar-2014
VERIFY ARMOUR AND/OR SHIELD/SHEATH BONDING AND GROUNDING AS PER CODE.	IP	C.S	03-Mar-2014
ENSURE CABLE CORE LABELLING, CONDUCTOR NUMBERING AND PHASING AS PER DRAWINGS.	IP	C.S	03-Mar-2014
CONFIRM SOURCE/DESTINATION ARE CONSISTENT WITH THE DRAWINGS, AND THAT PROPER CABLE TAGS ARE IN PLACE.	IP	C.S	03-Mar-2014
ENSURE PARALLEL FEEDERS ARE PROPERLY PHASE SEQUENCED AND SAME LENGTH.	NA	C.S	03-Mar-2014
INSPECT COMPRESSION TYPE APPLIED CONNECTORS FOR CORRECT CABLE MATCH.	NA	C.S	03-Mar-2014
PERFORM MEGGER TESTS WITH EQUIPMENT OPEN, ISOLATED OR DISCONNECTED.	IP	C.S	03-Mar-2014
ENSURE CABLE IS PROPERLY DE-ENERGIZED UPON COMPLETION OF TESTS.	IP	C.S	03-Mar-2014
CONFIRM CONDUCTORS ARE TERMINATED AS PER DRAWINGS.	IP	C.S	03-Mar-2014
CHECK FOR TIGHTNESS OF CONNECTIONS AND TERMINATIONS, **TORQUE TO SPECIFICATIONS.**	IP	C.S	03-Mar-2014

NOTES:

116. LV - POWER CABLE CHECKLIST (750V & LESS)

TARPON

MEGGER EQUIPMENT DATA

MANUFACTURER:	Fluke	MODEL NO.:	1587		
CALIBRATION CERTIFICATE NO.:		TEST RANGE:		CALIBRATION DATE:	

PRIMARY (NOTE: DE-ENERGIZE UPON COMPLETION OF TEST)

TESTING VOLTAGE	Φ TO GROUND (IN M/G Ω)				Φ TO Φ (IN M/G Ω)					
	A	B	C	N	AB	BC	CA	AN	BN	CN
1000V	2.2G	2.2G	NA	NA	NA	NA	NA	NA	NA	NA

TORQUE EQUIPMENT DATA

MANUFACTURER:		MODEL NO.:			
CALIBRATION CERTIFICATE NO.:		TEST RANGE:		CALIBRATION DATE:	

TORQUE DESCRIPTION : _____

CONNECTIONS	Ph.A	Ph.B	Ph.C	Neutral	Ground
BOLT SIZE					
MFG. TORQUE VALUE					
DATE TORQUED					

TORQUE DESCRIPTION : _____

CONNECTIONS	Ph.A	Ph.B	Ph.C	Neutral	Ground
BOLT SIZE					
MFG. TORQUE VALUE					
DATE TORQUED					

NOTES:

TECHNICIAN SIGNATURE:		NAME:	Cory Sheppard	DATE:	03-Mar-2014
CLIENT REP. SIGNATURE:		NAME:	Barry Nimman	DATE:	24-4-14

116. LV - POWER CABLE CHECKLIST (750V & LESS)

ELECTRIC & CONTROLS DIVISION - (E&C):	X	TARPON CONSTRUCTION MANAGEMENT - (TCM):			
CLIENT NAME:	Devon	E-TICKET #:		JOB #:	13010163B
BRANCH LOCATION:	01 Edmonton	LOCATION/LSD:	5 Blue		

CABLE TAG NO.:	See attached page			CABLE SOURCE LOCATION:	JBE-1602
MANUFACTURER:	Deca	CSA OR EQUIV.:	Yes	SIZE/VOLTAGE RATING:	#12 / 600V

STATUS: IP - INSPECTION PASS N/A - NOT APPLICABLE B/O - BY OTHERS	STATUS	INITIAL	DATE
VERIFY THE CABLE TYPE AND SIZE TO THE CURRENT CABLE DRAWINGS, SPECIFICATIONS AND CODE.	IP	C.S	03-Mar-2014
CHECK FOR ANY MECHANICAL DAMAGE OR DETERIORATION TO THE CABLE INSULATION.	IP	C.S	03-Mar-2014
ENSURE CABLE IS PROPERLY TRAINED AND SECURED TO RACEWAY AS PER SPECIFICATIONS.	IP	C.S	03-Mar-2014
ENSURE CABLE BEND RADIUS DOES NO EXCEED CODE OR SPECIFICATIONS.	IP	C.S	03-Mar-2014
VERIFY THAT THE CABLE CONNECTOR / BUSHINGS ARE OF THE PROPER TYPE AND SIZE AS SPECIFIED. CONFIRM AREA CLASSIFICATION AND SEALS (IF REQUIRED).	IP	C.S	03-Mar-2014
CHECK FOR THE PROPER SUPPORT OF CABLES AT ALL ELECTRICAL EQUIPMENT LOCATIONS, AS PER DETAILS, SPECIFICATIONS AND CODE.	IP	C.S	03-Mar-2014
VERIFY ARMOUR AND/OR SHIELD/SHEATH BONDING AND GROUNDING AS PER CODE.	IP	C.S	03-Mar-2014
ENSURE CABLE CORE LABELLING, CONDUCTOR NUMBERING AND PHASING AS PER DRAWINGS.	IP	C.S	03-Mar-2014
CONFIRM SOURCE/DESTINATION ARE CONSISTENT WITH THE DRAWINGS, AND THAT PROPER CABLE TAGS ARE IN PLACE.	IP	C.S	03-Mar-2014
ENSURE PARALLEL FEEDERS ARE PROPERLY PHASE SEQUENCED AND SAME LENGTH.	NA	C.S	03-Mar-2014
INSPECT COMPRESSION TYPE APPLIED CONNECTORS FOR CORRECT CABLE MATCH.	NA	C.S	03-Mar-2014
PERFORM MEGGER TESTS WITH EQUIPMENT OPEN, ISOLATED OR DISCONNECTED.	IP	C.S	03-Mar-2014
ENSURE CABLE IS PROPERLY DE-ENERGIZED UPON COMPLETION OF TESTS.	IP	C.S	03-Mar-2014
CONFIRM CONDUCTORS ARE TERMINATED AS PER DRAWINGS.	IP	C.S	03-Mar-2014
CHECK FOR TIGHTNESS OF CONNECTIONS AND TERMINATIONS, **TORQUE TO SPECIFICATIONS.**	IP	C.S	03-Mar-2014

NOTES:

116. LV - POWER CABLE CHECKLIST (750V & LESS)

TARPON

MEGGER EQUIPMENT DATA

MANUFACTURER:	Fluke	MODEL NO.:	1587		
CALIBRATION CERTIFICATE NO.:		TEST RANGE:		CALIBRATION DATE:	

PRIMARY (NOTE: DE-ENERGIZE UPON COMPLETION OF TEST)

TESTING VOLTAGE	Φ TO GROUND (IN M/G Ω)				Φ TO Φ (IN M/G Ω)					
	A	B	C	N	AB	BC	CA	AN	BN	CN
1000V	2.2G	2.2G	NA	NA	NA	NA	NA	NA	NA	NA

TORQUE EQUIPMENT DATA

MANUFACTURER:		MODEL NO.:			
CALIBRATION CERTIFICATE NO.:		TEST RANGE:		CALIBRATION DATE:	

TORQUE DESCRIPTION : _____

CONNECTIONS	Ph.A	Ph.B	Ph.C	Neutral	Ground
BOLT SIZE					
MFG. TORQUE VALUE					
DATE TORQUED					

TORQUE DESCRIPTION : _____

CONNECTIONS	Ph.A	Ph.B	Ph.C	Neutral	Ground
BOLT SIZE					
MFG. TORQUE VALUE					
DATE TORQUED					

NOTES:

TECHNICIAN SIGNATURE:		NAME:	Cory Sheppard	DATE:	03-Mar-2014
CLIENT REP. SIGNATURE:		NAME:	Barry Drummon	DATE:	24-4-14

2-1.6

6.

103. AS-BUILT / QA DOCUMENT TURNOVER ACCEPTANCE

ELECTRIC & CONTROLS DIVISION - (E&C): [X]		TARPON CONSTRUCTION MANAGEMENT - (TCM): [ ]			
CLIENT NAME:	Devon	E-TICKET #:		JOB #:	13010163B
BRANCH LOCATION:	01 Edmonton	LOCATION/LSD:	5 Blue		

THE ELECTRICAL PRINTS DESCRIBED BELOW ARE AS-BUILT (___SETS)

SET #1 TURNED OVER TO:		DATE:	
SET #2 TURNED OVER TO:		DATE:	

DESCRIPTION OF DOCUMENTS ENCLOSED	INCLUDED	RECEIVED BY	INITIAL
ITP LIST	Yes		
ONE SET COMPANY REDLINES / DCN'S	Yes		
ONE SET VENDOR SUPPLIED REDLINES	Yes		
QAQC DOCUMENTATION	Yes		
TEST EQUIPMENT CALIBRATION REPORTS	Yes		
PUNCH LIST REPORTS	Yes		
NCR REPORTS	No		
EQUIPMENT LIST (IF REQUIRED)	Yes		
SITE ACTIVITIES LIST (IF REQUIRED)	No		
SHIPPING LIST (IF REQUIRED)	Yes		
SHIPPING RELEASE (IF REQUIRED)	No		
PRE-SHIPMENT CHECKLIST (IF REQUIRED)	Yes		
ONE ELECTRONIC COPY OF QA PACKAGE	Yes		

NOTES:

IT IS AGREED THAT THE DOCUMENTS DESCRIBED HEREIN WITH THE EXCEPTIONS AS NOTED, ARE ECLECTICALLY . MECHANICALLY COMPLETE AND READY FOR COMMISSIONING AND ARE ACCEPTED AS TURNED OVER ON THE DATE ABOVE. THIS ACCEPTANCE DOES NOT AFFECT CONTRACTOR'S CONTRACTUAL OBLIGATION TO COMPLETE THE "DEFICIENCY LIST" LISTED AS PART OF THEIR RESPONSIBILITY AND SCOPE OF WORK.

TARPON REP SIGNATURE:		NAME:	Cory Sheppard	DATE:	28-Nov 13
CLIENT REP. SIGNATURE:		NAME:	Barry Norman	DATE:	29-4-14

7.

315. REQUEST FOR INFORMATION

ELECTRIC & CONTROLS DIVISION - (E&C): [X]		TARPON CONSTRUCTION MANAGEMENT - (TCM): [ ]			
CLIENT NAME:	Devon	E-TICKET #:		JOB #:	13010163B
BRANCH LOCATION:	01 Edmonton	LOCATION/LSD:	5 Blue		

RFI NO.:	B-4

INFORMATION REQUESTED:	[X] ELEC.	[ ] INSTR.	[ ] MECH.	[ ] SITE/CIVIL	[ ] STRUCT.	[ ] OTHER	
The power louver isn't on the prints just wondering which junction box it terminates in and what the cable tag and wire tags are? Also what wire size is required?							
INITIATED BY:	Cory Sheppard			DATE:	28-Nov-2013		
ATTENTION TO:	Shaun Eckford			COMPANY:	5 Blue		

DRAWINGS/DOCUMENTS ATTACHED:				
PROPOSED RESOLUTION:				
REPLY REQUIRED BY:		IMPACTS:	[ ] COST	[X] SCHEDULE
IMPACTS:				

INFORMATION TO REQUESTOR:			
RESPONSE BY:		DATE:	

VERIFIER'S SIGNATURE:		NAME:	Cory Sheppard	DATE:	28-Nov-2013
WITNESS' SIGNATURE:		NAME:	Barry Dinman.	DATE:	24-4-14

315. REQUEST FOR INFORMATION

TARPON

ELECTRIC & CONTROLS DIVISION - (E&C): [X]		TARPON CONSTRUCTION MANAGEMENT - (TCM): [ ]			
CLIENT NAME:	Devon	E-TICKET #:		JOB #:	13010163B
BRANCH LOCATION:	01 Edmonton	LOCATION/LSD:	5 Blue		

RFI NO.:	B-3

INFORMATION REQUESTED:	[X] ELEC.	[ ] INSTR.	[ ] MECH.	[ ] SITE/CIVIL	[ ] STRUCT.	[ ] OTHER	
Looking for information on the heights of the fire eyes located in the cardium separator. With the catwalk on the one side I would like to know if we mount them above or below.							
INITIATED BY:	Cory Sheppard			DATE:	27-Nov-2013		
ATTENTION TO:	Shaun Eckford			COMPANY:	5 Blue		

DRAWINGS/DOCUMENTS ATTACHED:				
PROPOSED RESOLUTION:				
REPLY REQUIRED BY:		IMPACTS:	[ ] COST	[ ] SCHEDULE
IMPACTS:				

INFORMATION TO REQUESTOR:			
RESPONSE BY:		DATE:	

VERIFIER'S SIGNATURE:	Cory Sheppard	NAME:	Cory Sheppard	DATE:	27-Nov-2013
WITNESS' SIGNATURE:		NAME:	Barry Norman	DATE:	24-4-14

315. REQUEST FOR INFORMATION

TARPON

ELECTRIC & CONTROLS DIVISION - (E&C): [X]		TARPON CONSTRUCTION MANAGEMENT - (TCM): [ ]			
CLIENT NAME:	Devon	E-TICKET #:		JOB #:	12010163B
BRANCH LOCATION:	01 Edmonton	LOCATION/LSD:	5 blue		

RFI NO.:	B-1

INFORMATION REQUESTED:	[X] ELEC.	[ ] INSTR.	[ ] MECH.	[ ] SITE/CIVIL	[ ] STRUCT.	[ ] OTHER	

The location of both the vertical and horizontal cable tray on the exterior of cardium separator at its proposed location will interfere with the lifting lug and there is not enough room to move it either way.

INITIATED BY:	Cory Sheppard	DATE:	27-Nov-2013
ATTENTION TO:	Shaun	COMPANY:	5 blue

DRAWINGS/DOCUMENTS ATTACHED:

2 pictures

PROPOSED RESOLUTION:

Move the tray to the other side of the window or the opposite side of the building.

REPLY REQUIRED BY:		IMPACTS:	[ ] COST	[X] SCHEDULE

IMPACTS:

INFORMATION TO REQUESTOR:

RESPONSE BY:		DATE:	

VERIFIER'S SIGNATURE:		NAME:	Cory Sheppard	DATE:	27-Nov-2013
WITNESS' SIGNATURE:		NAME:	Barry Nimmon	DATE:	24-4-14

315. REQUEST FOR INFORMATION

TARPON

ELECTRIC & CONTROLS DIVISION - (E&C): [X]		TARPON CONSTRUCTION MANAGEMENT - (TCM): [ ]			
CLIENT NAME:	Devon	E-TICKET #:		JOB #:	13010163B
BRANCH LOCATION:	01 Edmonton	LOCATION/LSD:	5 blue		

RFI NO.:	B-2

INFORMATION REQUESTED:	[X] ELEC.	[ ] INSTR.	[ ] MECH.	[ ] SITE/CIVIL	[ ] STRUCT.	[ ] OTHER	

Junction boxes JBDA-1605 and JBF-1609 are size 24w x24h x10d (A24H2410GQRLP) on the bill of material but that size of box is unavailable from Hoffman.

INITIATED BY:	Cory Sheppard	DATE:	27-Nov-2013
ATTENTION TO:	Shaun Eckford	COMPANY:	5 Blue

DRAWINGS/DOCUMENTS ATTACHED:

PROPOSED RESOLUTION:

Up size the junction boxes to a 24h x 24w x 12d (A24H2412GQRLP)

REPLY REQUIRED BY:		IMPACTS:	[ ] COST	[ ] SCHEDULE

IMPACTS:

INFORMATION TO REQUESTOR:

RESPONSE BY:		DATE:	

VERIFIER'S SIGNATURE:		NAME:	Cory Sheppard	DATE:	27-Nov-2013
WITNESS' SIGNATURE:		NAME:	Barry Newman	DATE:	24-4-14

315. REQUEST FOR INFORMATION

TARPON

ELECTRIC & CONTROLS DIVISION - (E&C): [X]		TARPON CONSTRUCTION MANAGEMENT - (TCM): [ ]			
CLIENT NAME:	Devon	E-TICKET #:		JOB #:	13010163B
BRANCH LOCATION:	01 Edmonton	LOCATION/LSD:	5 Blue		

RFI NO.:	B-5

INFORMATION REQUESTED:	[X] ELEC.	[ ] INSTR.	[ ] MECH.	[ ] SITE/CIVIL	[ ] STRUCT.	[ ] OTHER

On the cable schedule it is noted that one of the multivariable transmitter requires RS-485 cable, just requesting more information on why this cable is required and if anything extra is required in the junction box.

INITIATED BY:	Cory sheppard	DATE:	07-Dec-2013
ATTENTION TO:	Shaun Eckford	COMPANY:	5 Blue

DRAWINGS/DOCUMENTS ATTACHED:

PROPOSED RESOLUTION:

REPLY REQUIRED BY:	Dec 10, 2013	IMPACTS:	[ ] COST	[X] SCHEDULE

IMPACTS:

INFORMATION TO REQUESTOR:

RESPONSE BY:		DATE:	

VERIFIER'S SIGNATURE:	Cory Sheppard	NAME:	Cory Sheppard	DATE:	07-Dec-2013
WITNESS' SIGNATURE:	RB Nimman	NAME:	Barry Nimman	DATE:	24-4-14

8.

9.

309. DEFICIENCY PUNCH LIST

TARPON

ELECTRIC & CONTROLS DIVISION - (E&C): [X]	TARPON CONSTRUCTION MANAGEMENT - (TCM): [ ]			PAGE 1 OF 1
CLIENT NAME:	Devon	E-TICKET #:		JOB #: 13010163B
BRANCH LOCATION:	01 Edmonton	LOCATION/LSD:	5 Blue	

ITEM #	OUTSTANDING WORK ITEM OR DEFICIENCY	COMPLETED BY		QA REVIEW		REMARKS
		INIT.	DATE	INIT.	DATE	
1						
2						
3						
4						
5						
6						
7						
8						
9						
10						
11						
12						
13						
14						
15						

NOTES

VERIFIER'S SIGNATURE:		NAME:	Cory Sheppard	DATE:	
WITNESS' SIGNATURE:		NAME:		DATE:	

10.

SHIP LOOSE LIST

TARPON ENERGY SERVICES LTD.

To: Devon / 5 Blue

Date: Mar 3 /14

Tarpon Job#: 13010163B

Customer Job#: 1108

Quantity	Description	Unit Price	Item Total
	Seals to be packed and poured		
3	Interior Lights VMHL		
2	Exterior Lights VMIL		
1	Red beacon		
1	Amber beacon		

Customer Representative

Tarpon Representative

9204 - 41 Avenue, Edmonton, Alberta, Canada T6E 6R7
Tel: (780) 466-6000 Fax: (780) 466-6290

11.

TARPON ENERGY SERVICES LTD.

ISO 9001: 2008 Certified

Certificate of Calibration

For Instrument :	FLUKE 1520
Customer Name :	TARPON ENERGY
Description :	MEGOHMMETER
Asset Number :	92280025
Serial Number :	92280025
Certificate # :	9833-1

TARPON ENERGY SERVICES LTD. Certifies that...

the above described instrument met or exceeded all published (OEM) specifications at the time of calibration specified below; and has been calibrated using standards whose accuracies are traceable to the National Institute of Standards and Technology (NIST) and or National Research Council (NRC), or have been derived from accepted values or physical constants, or have been derived by ratio or self calibration techniques.

CALIBRATION INFORMATION

Cal Date Time	07-May-2013 08:59:36	Temperature	23.00°C	Work Order #	9833
Next Cal Due	07-May-2014	Humidity	40 %		
Pass	Y	Tech	Chuck Hwang		
Seals OK	Y	Note	N/A		
Cal Procedure	FLUKE 1520: (1 year) CAL VER			Revision	3.0

STANDARDS USED FOR CALIBRATION

Asset Number	Serial No.	Mfg	Model	Description	Cal. Date	Due Date
N-10	US28027709	Agilent Tech.	HP3458	Digital Multimeter	12/20/2012	12/20/2013
N-2	1940901	Fluke	5522A	Multifunction Calibrator	2/11/2013	2/11/2014

Calibration Technician

Quality Assurance Approval

Tarpon Energy Services Ltd., 1409 6Street, Nisku, AB.
T9E7M7,

TARPON ENERGY SERVICES LTD.

ISO 9001: 2008 Certified

Calibration Results

For Instrument : FLUKE 1520
MEGOHMMETER
Serial No: 92280025
Asset No. 92280025
Cal. Date : 07-May-2013
Cal. Due Date : 07-May-2014
Customer : TARPON ENERGY

Result: PASS
Performed on: 5/7/2013 at 08:59:36
Performed by: Chuck Hwang
Environment: Temp. 23.0°C Humid. 40 %
Condition F/L: FOUND-LEFT
Certificate # : 9833-1
Work Order # : 9833

Notes: N/A

Standards Used

Asset Number	Serial No.	Mfg	Model	Description	Cal. Date	Due Date
N-10	US28027709	Agilent Tech.	HP3458	Digital Multimeter	12/20/2012	12/20/2013
N-2	1940901	Fluke	5522A	Multifunction Calibrator	2/11/2013	2/11/2014

Test Results

Test Description	True Value	Test Result	Lower limit	Upper limit	% Tol	P / F
Root Difference Square guardbanding method used.						
DISPLAY TEST						P
BACKLIGHT TEST						P
DISCHARGE CIRCUIT TEST						
2060.935847 Ohms, 250 V						P
2060.905711 Ohms, 500 V						P
2060.86189 Ohms, 1000 V						P
2070.276947 Ohms, LoOhm						P
M OHMS TEST						
250 V RANGE						
0.25 MOhm @ 250 VOLTS						
0.250 MOhm	0.2499	0.250	0.243	0.257	1.39	P
MOhm @ 250 VOLTS						
0.500 MOhm	0.4999	0.499	0.488	0.512	7.47	P

Test Results

Test Description	True Value	Test Result	Lower limit	Upper limit	% Tol	P / F

End of Test Data

- If AS FOUND/AS LEFT is not listed separately, this means that no adjustment has been made and AS FOUND = AS LEFT.
- The ERROR % TOL field contains the error as a percentage of the tolerance, and gives a quick impression of how close the instrument is to the allowed tolerance

If there are any questions about tolerances, or the certificate please call (780)466-6000.

12.

EXHIBIT 10.3 - TRAVEL SHEET (FRONT)

C13-627

DO NOT START CONSTRUCTION WITHOUT QCI REVIEW TRAVEL SHEET REVISION NO.:

REVIEW DATE: SEPT 10th / 2013

SERIAL NO.: JOB NO.: C13-627 VESSEL TYPE: 5 BLUE 20'x 17' SKID

DRAWING NO.: DWG. REVISION NO.: TRAVEL SHEET INITIATION BY: CHRIS ELVERTORP

Seq.	Item	Comments	Q.C.I.	Date		3PI	Date		
1.	Calculations in File								
2.	Release of App'd Dwg.		CE	SEPT 9	2013	DD	Sept 20/13		
3.	Heat Numbers Recorded								
4.	MTRs Checked			SEPT 9	2013	DD	Sept 20/13		
5.	WPS(s) Checked					DD	Sept 20/13		
6.	Welder(s) Qualified	CWB TICKETS		SEPT 9	2013	DD	Sept 20/13		
7.	Cross square check	GOOD	CE	SEPT 9	2013	DD	Sept 20/13		
8.	Cross member dimensional check	GOOD	CE	SEPT 9	2013	DD	Sept 20/13		
9.	Visual weld check	YES	CE	SEPT 16	2013	DD	Sept 20/13		
10.	MPI	GOOD	CE	SEPT 19	2013	DD	Sept 20/13		
11.	3rd party #1 check fitup	GOOD		SEPT 9	2013				
12.	3rd party Welded out before checker check					DD	Sept 20/13		
13.	3rd party sump and final check					DD	Sept 20/13		
14.	Final Internal Inspection					DD	Sept 20/13		
15.	Weld Sizes Checked	GOOD	CE	SEPT 19	2013	DD	Sept 20/13		
16.	Welder I.D. Checked	GOOD	CE	SEPT 19	2013	DD	Sept 20/13		
17.	Final External Inspection	GOOD	CE	SEPT 20	2013				
18.	Radiography								
19.	Other N.D.E.								
20.	Final Ext. Prior to P.W.H.T.								
21.	PWHT Chart Checked								
22.	Hydrostatic Test	Shell Side Gauge # / Tube Side Gauge #							
23.	CRN Drawing	CRN#							
24.	N.C.R. #								
25.	Nameplate Stamping								
26.	Manuf. Data Report Completed & Verified								
27.	Nameplate Installation								

EXHIBIT 10.4 - TRAVEL SHEET (BACK)

MATERIAL THICKNESS VERIFICATION AND IDENTIFICATION

WELD I.D. / WELDER SYMBOLS / FIT-UP

Description	Thickness	Material Spec. & Grade	Heat & Slab Number or I.D. Number	Weld I.D.	Symbol	Fit-Up	Weld I.D.	Symbol	Fit-Up
Shell #1				L -			C -		
Shell #2				L -			C -		
Shell #3				L -			C -		
Shell #4				L -			C -		

EXHIBIT 14.2 - CONTINUITY LOG

CONTINUITY LOG Year 2013

WELDERS NAME FILE NUMBER	SYMBOL (WELDER ID #)	PROCESS	JAN. - MAR.	APR. - JUN.	JUL. - SEPT.	OCT. - DEC.
AL BEAUDRY	#16	SMAW ALL POS	EXP JAN 17/2015			
		FCAW ALL POS	EXP JAN 29/2014			
ROB DAIR	#1	FCAW ALL POS		EXP MAY 24/2015		
ANDRIY POLISHCHUK	#4	FCAW ALL POS		EXP MAY 24/2015		

Welder Qualification

This card is valid only while employed by a CWB certified company

Transferable Welder

Name: ROB G. DAIR
Exp. Date: May 24, 2016
Employer: Canada Conveyor Systems, Nisku, AB
Thickness Range: 3mm & above
Material: Carbon Steel
Process: FCAW/MCAW
Standard: CSA W47.1
Classification: S

Mode: SEMI-AUTO
Single Electrode Mechanized
Single Electrode Automatic

Class: FLAT/HORIZONTAL/VERTICAL UP/OVERHEAD

See Reverse for Conditions

Welder Qualification

This card is valid only while employed by a CWB certified company

Transferable Welder

Name: ANDRIY V. POLISHCHUK
Exp. Date: May 24, 2016
Employer: Canada Conveyor Systems, Nisku, AB
Thickness Range: 3mm & above
Material: Carbon Steel
Process: FCAW/MCAW
Standard: CSA W47.1
Classification: S

Mode: SEMI-AUTO
Single Electrode Mechanized
Single Electrode Automatic

Class: FLAT/HORIZONTAL/VERTICAL UP/OVERHEAD

See Reverse for Conditions

Welder Qualification

This card is valid only while employed by a CWB certified company
Transferable Welder

Name: ALLAN J. BEAUDRY
Exp. Date: Jan 17, 2015
Employer: Atlantic Flushing and Testing Inc., Dartmouth, NS
Thickness Range: 3mm & above
Material: Carbon Steel
Process: SMAW
Mode: MANUAL
Standard: CSA W47.1
Classification: S
Electrode: F4
Class: FLAT/HORIZONTAL/VERTICAL UP/OVERHEAD

See Reverse for Conditions

Welder Qualification

This card is valid only while employed by a CWB certified company
Transferable Welder

Name: ALLAN J. BEAUDRY
Exp Date: [illegible]
Employer: TG Welding & Fabrication Limited, Dartmouth, NS
Thickness Range: 3mm & above
Material: Carbon Steel
Process: FCAW/MCAW
Mode: SEMI-AUTO
Single Electrode Mechanized
Single Electrode Automatic
Standard: CSA W47.1
Classification: S
Class: FLAT/HORIZONTAL/VERTICAL UP/OVERHEAD

See Reverse for Conditions

MARENER "SAFETY TRAINING PROGRAM"

Program: Fall Protection Training

Name: Allan Beaudry

This card shall be kept by the operator as proof of successfully completing the prescribed training program.

Trained/Tested By: Johnny Keating
Date Trained: 2011.09.26
Expiry: 2013.09.26

Approved By: Andrew Burton

MARENER
Online Learning

NOVA SCOTIA
Labour and Workforce Development

Allan Joseph Beaudry
Welder

Client No. - 20073783
Certificate No. - 2249
Issued - 2009/05/08
Expiry - 2015/05/31
DOB - 1964/06/30

Red Seal Issued - 2009/05/08
Red Seal No. B-22-12072

Certified

Marjorie Davison, Director

CERTIFICATE OF TRAINING

AL BEAUDRY
has completed training in
CONFINED SPACE AWARENESS

Employer: MARITIME PRESSUREWORKS
01 DEC 2010
expiry DEC 2012
Lamont Larkin & Associates

CERTIFICATE OF TRAINING

AL BEAUDRY
has completed training in
WHMIS UPDATE (CSAO/DANATEC)

Employer MARITIME PRESSUREWORKS
DEC 2010
Lamont Larkin & Associates

Double "T" NDT Inc.
55 Mcleod Crescent
...ic, AB T9E 6N9

Magnetic Particle Examination Report

0719

Cell: 780-952-0538
OFFICE: 780-952-0539
Email: freedom100@telus.net

Field Report Number: _____ Page 1 of 1 Date: SEPT. 19/13

Job # _____ PO # C-13-627 DRAWING # 581108-02DR-10-001

Client: CANADA CONVEYOR SERVICES

Location: NISKU / AB

Item Examined: SEE BELOW

Test Method: MT-3V

Acceptance Code: ASTM E 709

TECHNIQUE DETAILS

1. MPI Equipment

Manufacturer PARKER Type B300 Serial No. 21166 Calibration: SEPT. 10/13

Manufacturer _____ Type _____ Serial No. _____ Calibration: _____

2. Magnetizing Method: AC ☒ DC ☐ Continuous ☒ Residual ☐ Yoke ☒ Coil ☐

3. Magnetizing Particles Dry (Color BLACK) ☐ Wet ☒ 820 Fluorescent ☐ Batch# 18644 Manufacturer MI-GLO

4. Background: ✓ MAGNAFLUX WCP-2 Batch#: 1041

5. Surface Condition As Ground ☐ Machined ☐ As Welded ☒ Painted ☐

EXAMINATION RESULTS & COMMENTS

A BLACK ON WHITE MPI WAS PERFORMED ON WELDMENT FOR 4 LUGS ON SKID AS PER CLIENTS REQUEST

RESULTS: NO LINEAR INDICATIONS NOTED AT TIME OF INSPECTION

ACCEPTABLE TO CODE & CLIENT

Client Representative: _____

Client (sign): _____

Technician (print): THOMAS TAYLOR CGSB# 13326

Client Representative Signature indicates acceptance of report and results

LEVEL II

Consumables: 2

Hrs: 2

Kilometers: _____

1 MAN

C13-627

ent Summary

4 Sep 2013 Page: 1/1

rice Steel Ltd.
13500 - 156 Street
Edmonton AB
T5N 1L3

Tel: (780)447-9999 Fax: (780)447-9998

Ship To: KOZIAK ENGINEERING
501 - 14 AVENUE
NIS-501 - 14 AVENUE AB
T9E 7M8
Contact:
Tel: 780-436-8247 Fax: 780-436-1042

Ref #: C506125

The order of the printed MTRs is as follows:

Number	Item Description	Heat
1	BW- 10 @ 26 WF BEAM 60FT A572-GR50	55028299

Sep 5/13 M.F

07735 Page 1/

CERTIFIED MATERIAL TEST REPORT

GERDAU

US-ML-CARTERSVILLE
384 OLD GRASSDALE ROAD NE
CARTERSVILLE, GA 30121
USA

CUSTOMER SHIP TO	CUSTOMER BILL TO
PRICE STEEL LTD 13500 156TH ST NW EDMONTON,AB T5V 1L3 Canada	PRICE STEEL LTD 13500 156TH ST NW EDMONTON,AB T5V 1L3 Canada

GRADE	SHAPE / SIZE
A992/A572-50	Wide Flange Beam / 10 X 26#

LENGTH	WEIGHT	HEAT / BATCH
60'00"	15,600 LB	55028299/03

SALES ORDER	CUSTOMER MATERIAL N°
448597/000050	

SPECIFICATION / DATE or REVISION
1-ASTM A6/A6M-11
2-A992/A992M-11
3-A572/A572M-07

CUSTOMER PURCHASE ORDER NUMBER	BILL OF LADING	DATE
33237F	1323-0000008060	07/13/2013

CHEMICAL COMPOSITION

C %	Mn %	P %	S %	Si %	Cu %	Ni %	Cr %	Mo %	V %	Nb %	N %	Pb %
0.07	1.17	0.013	0.019	0.28	0.27	0.09	0.05	0.023	0.028	0.001	0.0080	0.0060

CHEMICAL COMPOSITION

Sn %
0.010

MECHANICAL PROPERTIES

Elong. %	G/L Inch	UTS PSI	UTS MPa	YS 0.2% PSI	YS MPa
20.30	8.000	73500	507	59800	412
19.90	8.000	71400	492	55900	385

MECHANICAL PROPERTIES

YS / UTS %
0.810
0.780

COMMENTS / NOTES

The above figures are certified chemical and physical test records as contained in the permanent records of company. This material, including the billets, was melted and manufactured in the USA. CMTR complies with EN 10204 3.1.

BHASKAR YALAMANCHILI
QUALITY DIRECTOR

YAN WANG
QUALITY ASSURANCE MGR

ent Summary

4 Sep 2013 Page: 1/1

ice Steel Ltd.
13500 - 156 Street
Edmonton AB
T5N 1L3

Tel: (780)447-9999 Fax: (780)447-9998

Ship To:

Contact:
Tel: Fax:

Ref #: <no Ref.#>

The order of the printed MTRs is as follows:

Number	Item Description	Heat
1	PC- 1/4 CHECKER PLATE 72 X 240	4682M

Sep 5 /13 P.F

CERTIFICATE OF CONFORMANCE

64382

1/2

11/01/12

*JANCO STEEL LTD
925 ARVIN AVENUE
STONEY CREEK ONT L8E 5N9
905-643-3535

TO:
PRICE STEEL LTD.
13500-156 STREET
EDMONTON, ALBERTA T5V 1L3
"EMAIL INVOICES"

SHIP TO:
PRICE STEEL LTD.
13500-156 STREET
EDMONTON, ALBERTA T5V 1L3

SIZE: .250 X 72.00 X 240.00
GRADE: CHECKERPLATE ASTM A786

Bill/Ladng# 494246 B/L Date 11/01/12 Sales Ordr: 848708 01
Cust. P/O#: 32237F Part No.: 13827

Tag# 7052686	01	Heat# 4682M		MasterTag# 320626	01	Origin	CDN	
C : 0.06	Mn: 0.37	P : 0.008	S : 0.004	Al: 0.038	Si: 0.01			
Ti: 0.001		Mo: 0.01	Cu: 0.02	V : 0	Cr: 0.02			
					Ni: 0.01			
Tag# 7052687	01	Heat# 4682M		MasterTag# 320626	01	Origin	CDN	
C : 0.06	Mn: 0.37	P : 0.008	S : 0.004	Al: 0.038	Si: 0.01			
Ti: 0.001		Mo: 0.01	Cu: 0.02	V : 0	Cr: 0.02			
					Ni: 0.01			
Tag# 7052688	01	Heat# 4682M		MasterTag# 320626	01	Origin	CDN	
C : 0.06	Mn: 0.37	P : 0.008	S : 0.004	Al: 0.038	Si: 0.01			
Ti: 0.001		Mo: 0.01	Cu: 0.02	V : 0	Cr: 0.02			
					Ni: 0.01			

WE HEREBY AFFIRM THE ABOVE FIGURES ARE ACCURATELY STATED, MEET YOUR MATERIAL REQUIREMENTS AND ARE TRACEABLE IN OUR RECORDS BACK TO THE PRODUCER AND/OR AN ACCREDITED TEST LABORATORY.

CARL EVINK

QUALITY CONTROL MANAGER

64382

2/2

ESSAR STEEL

ESSAR STEEL ALGOMA INC.,105 West Street, Sault Ste. Marie,Ontario, Canada P6A 7B4

SO No.,Item & Date.: 8003954 000010 2012/10/09	Shipment No.& Date.: 1000010568 2012/10/15	TC No., Date & Time : ESA-18130 2012/10/15 - 22:13:10
Sold to Customer Name and Address :	Ship to Customer Name and Address:	Customer PO NO./Item: 011734 / 1
JANCO STEEL LIMITED	JANCO STEEL LIMITED	BOL NO.: 1000010568
ARVIN AVENUE 925	ARVIN AVENUE 925	Cust.Part No.:
STONEY CREEK,Ontario,Canada	STONEY CREEK,Ontario,Canada	Carrier : GARDEWINE GROUP INC. - 1637 1423
L8E 5N9	L8E 5N9	

Customer Specification : HR FLOOR PLATE Carbon CQ / CS ALGOMA 50/ASTM A786 (93) / (09) Top Standard Surface Standard Shape Std Thickness Tol

Supplementary Instructions : Test Cert 1:905-643-5164 E

Insp T/R : Chemical Analysis Cust Use : FLOOR PLATE

ESSAR STEEL ALGOMA INC. HEREBY CERTIFIES THAT THE MATERIAL HEREIN DESCRIBED WAS MADE AND TESTED IN ACCORDANCE WITH THE RULES OF THE SPECIFICATION SHOWN. ALL RESULTS ARE RETAINED IN ACCORDANCE WITH THE COMPANY'S STANDARD RECORD KEEPING PRACTICES.
THIS MILL TEST REPORT MAY NOT BE REPRODUCED EXCEPT IN FULL WITHOUT WRITTEN APPROVAL OF ESSAR STEEL ALGOMA INC. IF YOU RECEIVE THIS DOCUMENT AND ARE NOT THE INTENDED RECEIVER, PLEASE CALL (705)945-4095 FOR INSTRUCTIONS ON METHOD OF DISPOSAL OF DOCUMENT.

MEETS EN 10204 3.1
ISO QUALITY AND ENVIRONMENTAL CERTIFICATES AVAILABLE AT WWW.ESSARSTEELALGOMA.COM

HEATS INDICATED WITH (+) MADE IN CANADA WITH DOMESTIC AND NORTH AMERICAN MATERIALS.

Dimensions (T x W x L)	Batch No.	Heat No-MS	Quantity	Pcs
0.2590 " x 72.800 "	137291050	4682M-04	30,230 LB	1

CHEMICAL PROPERTIES

Heat No. (wt%)	C	Mn	P	S	Si	Cr	Ni	Cu	Mo	Al	Nb	V	Ti
4682M	0.06	0.37	0.008	0.004	0.010	0.02	0.01	0.02	0.01	0.038	0.000	0.000	0.001

K. UGHADPAGA
MANAGER METALLURGICAL SERVICES

WARNING THE TEST RESULTS AND VALUES REPORTED HEREIN INDICATE ONLY THAT (1) THE PARTICULAR STEEL FOR WHICH THIS CERTIFICATE IS ISSUED MEETS THE MINIMUM SPECIFIED YIELD STRENGTH AND (2) THE ANALYSIS AND PHYSICAL PROPERTIES OF SUCH STEEL ARE IN CONFORMANCE WITH THE REQUIREMENTS OF THE SPECIFICATION INDICATED. THE RESULTS OR VALUES REPORTED HEREIN CAN NOT BE USED TO QUALIFY THE STEEL FOR ANY SPECIFICATION OTHER THAN THE ONE INDICATED AND CAN NOT BE RELIED UPON FOR ANY PURPOSE (INCLUDING DESIGN OR CALCULATIONS) AS REPRESENTING THE ACTUAL STRENGTH OF SUCH STEEL.

ent Summary

4 Sep 2013 Page: 1/1

ice Steel Ltd.
13500 - 156 Street
Edmonton AB
T5N 1L3

Tel: (780)447-9999 Fax: (780)447-9998

Ship To:

Contact:
Tel: Fax:

Ref #: <no Ref.#>

The order of the printed MTRs is as follows:

Number	Item Description	Heat
1	ASE- 3 X 3 X 3/8 ANGLE 20FT 44W	52061747
2	AME- 2 X 2 X 1/4 ANGLE 20FT 44W	51126734
3	PSB- 2 STD PIPE 21FT A53 GRB	2200752

Sep 5/13 M.F

CERTIFIED MATERIAL TEST REPORT

GERDAU

CA-ML-WHITBY
HOPKINS STREET SOUTH
WHITBY, ON L1N 5T1
Canada

CUSTOMER SHIP TO	CUSTOMER BILL TO
PRICE STEEL LTD 13500 156TH ST NW EDMONTON,AB T5V 1L3 Canada	PRICE STEEL LTD 13500 156TH ST NW EDMONTON,AB T5V 1L3 Canada

GRADE	SHAPE / SIZE	
A36/44W/A529-50	Angle / 3X3X3/8	673460

LENGTH	WEIGHT	HEAT / BATCH
20'00"	34,272 LB	52061747/02

SALES ORDER	CUSTOMER MATERIAL Nº
414119/000050	

SPECIFICATION / DATE or REVISION
1-ASTM A6/A6M-11, A36/A36M-08
2-A709/A709M-11 GR36/50
3-A529/A529M-05 GR50
4-CSA G40.21-04(R2009) 44W/50W

CUSTOMER PURCHASE ORDER NUMBER	BILL OF LADING	DATE
33122N	1302-0000006123	06/10/2013

CHEMICAL COMPOSITION

C %	Mn %	P %	S %	Si %	Cu %	Ni %	Cr %	V %	Nb %
0.18	0.81	0.018	0.038	0.21	0.30	0.09	0.14	0.001	0.002

MECHANICAL PROPERTIES

Elong. %	UTS PSI	UTS MPa	YS 0.2% PSI	YS MPa
22.50	75355	520	52429	361
22.50	76637	528	53288	367

COMMENTS / NOTES

The above figures are certified chemical and physical test records as contained in the permanent records of Company. This material, including the billets was melted and manufactured in Canada. We certify that these data are correct and in compliance with specified requirements. CMTR complies with EN 10204 3.1.

Bhaskar — BHASKAR YALAMANCHILI, QUALITY DIRECTOR

Leonardo Nunes — LEONARDO NUNES, QUALITY ASSURANCE MGR

GERDAU

CA-ML-CAMBRIDGE
160 ORION PLACE
CAMBRIDGE, ON N1T 1R9
Canadá

CERTIFICADO DE QU[illegible]ADE

057764 Page

CUSTOMER SHIP TO	CUSTOMER BILL TO	GRADE	SHAPE / SIZE
PRICE STEEL LTD 13500 156TH ST NW EDMONTON,AB T5V 1L3 Canadá	PRICE STEEL LTD 13500 156TH ST NW EDMONTON,AB T5V 1L3 Canadá	A36/44W/50W	Angle / 2X2X1/4

LENGTH	WEIGHT	HEAT / BATCH
20'00"	25,840 LB	51126734/02

SALES ORDER	CUSTOMER MATERIAL Nº	SPECIFICATION / DATE or REVISION
493092/000080		

CUSTOMER PURCHASE ORDER NUMBER	BILL OF LADING	DATE
33364N	1301-0000005503	07/30/2013

CHEMICAL COMPOSITION

%	%	%	%	%	%	%	%	%	%
0.17	0.62	0.018	0.043	0.20	0.44	0.10	0.11	0.003	0.34

MECHANICAL PROPERTIES

%	Pole	mm	PSI	MPa	PSI
27.50	8.000	200.0	73723	508	51800
28.50	8.000	200.0	74355	513	52556

MECHANICAL PROPERTIES

MPa
357
362

COMMENTS / NOTES

BHASKAR YALAMANCHILI
QUALITY DIRECTOR

MARYAM CHAMANEH
QUALITY ASSURANCE MGR.

63947

SURYA ROSHNI LIMITED

(STEEL DIVISION)

PRAKASH NAGAR, BAHADURGARH - 124507, HARYANA (INDIA)

PRAKASH SURYA STEEL PIPES & C.R.STRIPS

Mill/Material/Manufacturer's Test Certificate

TC No. : SRL/QA/ASTM/2012/0606 Date: 29-05-2012

Applicant : COUTINHO + FERROSTAAL INC.
NORTHCHASE DRIVE 16510
77060 HOUSTON TX

W.O. No. : 2012/E/36
P.I. No. : SRL/BHG/EXP/PI-45
Invoice No. : SRL/BHG/EXP/119 DTD. 28-05-2012
P.O.No. : 1010151700
L.C. NO. : LCI12050626 DTD. 25-05-2012 OF HSH NORDBANK AG, HAMBURG, GERMANY

We certify that the material described below fully conforms to ASTM A 53. The chemical composition & Mechanical testing conforms to ASTM A 751 & ASTM A370 respectively. Please refer to ASTM A 53 for details of specification requirements.

Description of Material :

MS ERW BLACK STEEL PIPES, BEVEL ENDS OF SIZE 2" X SCHED 40, CONFORMING TO ASTM A-53 GR. B SCH. 40 IN THE LENGTH OF 21FT. (-0 / +0.16 FT.)

Quantity : 104 Pcs.

TEST RESULTS

Chemical Composition / Analysis :

Heat No.	Pipe No.	C%	Mn%	S%	P%	Cr%	Cu%	Mo%	Ni%	V%
Specified Requirements (Max.)		0.300	1.200	0.0450	0.0500	0.400	0.500	0.150	0.400	0.080
2200752	L	0.060	0.660	0.0060	0.0060	–	–	–	–	–
	C	0.065	0.650	0.0060	0.0050	–	–	–	–	–
	P1	0.068	0.630	0.0050	0.0070	0.025	0.016	0.017	0.012	0.003
	P2	0.074	0.640	0.0070	0.0060	0.026	0.017	0.015	0.013	0.003

Mechanical Properties :

--- Control Tensile Test ---				--- Product Tensile Test ---(Orientation-Longitudinal)				
Heat No.	Y.S. (MPa)	U.T.S. (MPa)	% EL on 50 mmGL	Pipe No.	Y.S. (MPa)	U.T.S. (MPa)	% EL on 50 mmGL	Bend Test
Spec. Req. (Min.)	240.00	415.00	21.00	Spec. Req. (Min.)	240.00	415.00	21.00	
2200752	296.35	428.77	38.56	P1	301.77	435.96	33.75	OK

Hydrotest Carried on 100% pipes (Std. HTP 17.20 MPa) Pressure Applied 17.20 MPa for min. 7 Sec.

NDT Operations on Weld & HAZ (Carried out on 100% pipes)

Equipment: 1. Electromagenatic (On-line) : Calibration : Ref. Hole 3.20 mm,Filter: HP 10 LP 30 Sensitivity 60dB, Frequency 3KHz

Heat Treatment on Welds : Pipes Weld Seam Normalized at temperature of 800 to 940°C.

Micro Analysis : No Untempered Martensite Observed and Uniformly Distributed Ferrite Pearlite structure observed.

Dimensions (Carried out on 100% pipes) : OD = 60.3mm, Thickness = 3.91mm, Weight = 5.44Kg/m, Length conforms to requirements stipulated In ASTM A53 and Purchase Order / Proforma Invoice.

Tolerance : OD ±1.0%, Thick. -12.5%, Weight ± 10%.

Workmanship : Conforms to ASTM A53 & P.O., Ends : Bevel End

Note : Material Certificate is according to EN 10204 / 3.1

SURYA ROSHNI LTD. HEAD QA BAHADURGARH

Head (QA/QC)

Surya Roshni Limited

ent Summary

4 Sep 2013 Page: 1/1

ice Steel Ltd.
13500 - 156 Street
Edmonton AB
T5N 1L3

Tel: (780)447-9999 Fax: (780)447-9998

Ship To: KOZIAK ENGINEERING
501 - 14 AVENUE
NIS-501 - 14 AVENUE AB
T9E 7M8
Contact:
Tel: 780-436-8247 Fax: 780-436-1042

Ref #: C506125

The order of the printed MTRs is as follows:

Number	Item Description	Heat
1	CHS- 6 @ 10.5 CHANNEL 20FT 44W	52062100

Sep 5 /13 JL.F

CERTIFIED MATERIAL TEST REPORT

GERDAU

CA-ML-WHITBY
HOPKINS STREET SOUTH
WHITBY, ON L1N 5T1
Canada

CUSTOMER SHIP TO	CUSTOMER BILL TO
PRICE STEEL LTD 13500 156TH ST NW EDMONTON,AB T5V 1L3 Canada	PRICE STEEL LTD 13500 156TH ST NW EDMONTON,AB T5V 1L3 Canada

GRADE	SHAPE / SIZE	LENGTH	WEIGHT	HEAT / BATCH
A36/44W/A529-50	Channel / 6 X 10.5# 673444	20'00"	12,600 LB	52062100/03

SALES ORDER	CUSTOMER MATERIAL N°
415150/000030	

SPECIFICATION / DATE or REVISION
1-ASTM A6/A6M-11, A36/A36M-08
2-A709/A709M-11 GR36/50
3-A529/A529M-05 GR50
4-CSA G40.21-04(R2009) 44W/50W

CUSTOMER PURCHASE ORDER NUMBER	BILL OF LADING	DATE
33130N		06/10/2013

CHEMICAL COMPOSITION

C %	Mn %	P %	S %	Si %	Cu %	Ni %	Cr %	V %	Nb %
0.17	0.86	0.014	0.030	0.19	0.32	0.12	0.14	0.000	0.001

MECHANICAL PROPERTIES

Elong. %	UTS PSI	YS 0.2% PSI
22.50	74347	53263
22.50	76655	55524

COMMENTS / NOTES

The above figures are certified chemical and physical test records as contained in the permanent records of Company. This material, including the billets was melted and manufactured in Canada. We certify that these data are correct and in compliance with specified requirements. CMTR complies with EN 10204 3.1.

Bhaskar — BHASKAR YALAMANCHILI, QUALITY DIRECTOR

Leonardo Nunes — LEONARDO NUNES, QUALITY ASSURANCE MGR

C.W. CARRY LTD.
STEEL SERVICE CENTRE
5815 - 75 STREET, EDMONTON, AB
T6E 0T3
P. 780-465-0381 F. 780-466-8263 www.cwcarry.com

Tuesday, 17-Sep-2013

From:

Gary Kitt
5815 - 75 St
Edmonton, AB Canada
Ph: 780-465-0381
mtr@cwcarry.com
www.cwcarry.com

To:

KOZIAK ENGINEERING LTD.
GEORGE
501 - 14 AVENUE
NISKU,AB,CAN

Ph: 780-436-8247
Fax: 780-979-6599

WO# 213455
PO# C13-627

Document Summary Page

The MTR's are printed in the following order:

#	Description	Heat	ID #
1	3/8 X 4 FL	SE13103492	
2	L 2 X 2 X 1/4	109303	

Sep 19/13 fl. F

MTRs Produced By MetalTrace. Trace Applications Inc. www.TraceApps.com or call toll-free: 1.866.429.7007 for more information

SOLD TO: C W CARRY(1967) LTD
5815 75TH ST
EDMONTON AB T6E 0T3
CANADA

SHIP TO: C W CARRY
5815 75TH ST
EDMONTON AB T6E 0T3
CANADA

NUCOR
NUCOR STEEL SEATTLE, INC.

CERTIFIED MILL TEST REPORT

Ship from:
Nucor Steel Seattle, Inc.
2424 SW Andover
SEATTLE, WA 98106-1100
206-933-2222

Date: 10-Sep-2013
B.L. Number: 456771
Load Number: 287648

Material Safety Data Sheets are available at www.nucorbar.com or by contacting your inside sales representative.

NBMG-08 January 1, 2012

LOT # / HEAT #	DESCRIPTION	PHYSICAL TESTS					CHEMICAL TESTS							
		YIELD P.S.I.	TENSILE P.S.I.	ELONG % IN 8"	BEND	WT% / DEF	C / Ni	Mn / Cr	P / Mo	S / V	Si / Cb	Cu / Sn	C.E.
PO# =>	37372												
SE1310284601	Nucor Steel - Seattle Inc	51,276	74,251	31.3%		***	.15	.85	.012	.040	.20	.33	.36
SE13102846	3/4x3" Flat	354MPa	512MPa				.13	.13	.030	.017	.005		
	20' A36/44W	51,556	74,284	31.3%									
	CSA G40.21-04 44W/ASTM A36/A36M-08	355MPa	512MPa										
	ASTM A709/A709M-11 GR 36 [250]												
	ASME SA36-2007 EDITION-2011 ADDE NDA												
	ASTM A36/A36M-08, A709/709M-11 G R36, ASME SA36-10 Ed '11 Ad.												
PO# =>	37210												
SE1310349201	Nucor Steel - Seattle Inc	51,600	73,300	34.4%			.16	.91	.011	.039	.19	.31	
SE13103492	3/8x4" Flat	356MPa	505MPa				.09	.11	.020	.011	.002		
	20' NUCOR MULTIGRADE	51,600	72,600	33.6%			REDRAT						
	NUCOR MULTIGRADE	356MPa	501MPa				PB = *	**					
	ASTM A709/A709M-11 GR 36 [250]												
	ASTM A529/A529M-05 GR 50												
	CSA G40.21-04 GR 50W												
	CSA G40.21-04 GR 44W												
	ASME SA36-2007 EDITION-2011 ADDE NDA												
	ASTM A36/A36M-08, A709/709M-11 G R36, ASME SA36-10 Ed '11 Ad.												

I hereby certify that the material described herein has been manufactured in accordance with the specifications and standards listed above and that it satisfies those requirements.
1.) Weld repair was not performed on this material.
2.) Melted and Manufactured in the United States.
3.) Mercury, Radium, or Alpha source materials in any form

QUALITY

PO 35555

豐興鋼鐵股份有限公司
FENG HSIN IRON & STEEL CO., LTD.

OFFICE : 臺中市后里區甲后路702號
702,CHIA HOU ROAD,HOU LI DISTRICT,
TAICHUNG CITY,TAIWAN,ROC
TEL : (04)25565101 FAX : (04)25566955

MILL TEST CERTIFICATE

CUSTOMER NAME	HARUBENI-ITOCHU STEEL CANADA INC.	CERTIFICATE NO.	1024391-A1-1
SPEC.	CSA G40.21 GR44W	CERTIFICATE DATE	JUN. 27 2013

GOODS DESCRIPTION					TENSILE TEST			CHEMICAL ANALYSIS (%)														
SIZE (mm)	LEN. (m)	QTY (bdl.)	WEIGHT (kg)	HEAT NO.	YP ksi / kg/mm²	TS ksi / kg/mm²	EL (%)	C	Si	Mn	P	S	Ni	Cr	Mo	Cu		Al	NB		B	
								× 100			× 1000		× 100					× 1000			ppm	
MILD STEEL EQUAL ANGLE BAR																						
B × t					44	65	20	22	40	50	40	50										
					MIN	90	MIN	MAX	MAX	150	MAX	MAX										
2 × 1/4	20	14	25,453	109303	54	76	37	17	18	88	11	12	6	8	2	17			1			
2 × 3/16	20	16	29,831	108548	54	79	36	19	18	93	11	24	6	9	3	21			2			
1-1/2× 1/8	20	2	4,367	108547	56	79	40	18	16	88	10	19	7	8	2	22			1			
SUB TOTAL		32	59,651																			
MILD STEEL FLAT BAR																						
B × t					44	65	20	22	40	50	40	50										
					MIN	90	MIN	MAX	MAX	150	MAX	MAX										
2 × 1/2	20	4	6,838	109299	51	78	32	17	18	90	13	18	7	9	2	36	24		2			
2 × 1/4	20	10	20,836	109301	48	78	23	18	19	88	18	21	8	12	4	37	21		2			
2 × 3/16	20	3	4,930	109298	48	75	26	17	18	85	32	21	8	14	2	36	29		3			
2 × 3/8	20	6	9,373	109298	48	75	26	17	18	85	32	21	8	14	2	36	29		3			
3 × 1/2	20	2	4,630	109300	51	78	35	17	19	85	17	19	8	11	2	36	28		2			
3 × 1/4	20	5	9,050	109302	52	76	38	16	18	89	26	18	8	17	3	37	25		3			
3 × 3/8	20	4	6,835	109300	51	78	35	17	19	85	17	19	8	11	2	36	28		2			
4 × 1/2	20	4	6,838	109656	50	75	31	17	18	88	16	25	8	10	2	36	29		3			
4 × 1/4	20	2	4,343	109658	51	74	23	16	17	89	14	15	7	12	2	35	23		2			
4 × 3/16	20	3	4,524	109658	51	74	23	16	17	89	14	15	7	12	2	35	23		2			
4 × 3/8	20	2	4,168	109656	50	75	31	17	18	88	16	25	8	10	2	36	29		3			

REMARK:

QC-09-04

WE HEREBY CERTIFY THAT THE MATERIAL DESCRIBED HEREIN HAS BEEN MANUFACTURED AND TESTED WITH SATISFACTORY RESULTS IN ACCORDANCE WITH THE REQUIREMENT OF THE ABOVE MATERIAL SPECIFICATION.

MANAGER
METALLURGICAL
R&D DEP.

郭志毅

C.W. CARRY LTD.
STEEL SERVICE CENTRE
5815 - 75 STREET, EDMONTON, AB
T6E 0T3
P. 780-465-0381 F. 780-466-8263 www.cwcarry.com

Wednesday, 11-Sep-2013

From:

Gary Kitt
5815 - 75 St
Edmonton, AB Canada
Ph: 780-465-0381
mtr@cwcarry.com
www.cwcarry.com

To:

KOZIAK ENGINEERING LTD.
DONNIE
501 - 14 AVENUE
NISKU,AB,CAN

Ph: 780-436-8247
Fax: 780-979-6599

WO# SO-0213165
PO# C13-627

Document Summary Page

The MTR's are printed in the following order:

#	Description	Heat	ID #
1	1/4 X 2 FL	109301	
2	L 1 1/4 X 1 1/4 X 1/4	PL13202072	

Sep 13/13 JO.F

MTRs Produced By MetalTrace. Trace Applications Inc. www.TraceApps.com or call toll-free: 1.866.429.7007 for more information

PO 35555

豐興鋼鐵股份有限公司
FENG HSIN IRON & STEEL CO., LTD.

OFFICE : 臺中市后里區甲后路702號
702,CHIA HOU ROAD,HOU LI DISTRICT,
TAICHUNG CITY,TAIWAN,ROC
TEL : (04)25565101 FAX : (04)25566955

MILL TEST CERTIFICATE

CUSTOMER NAME	HARIBENI-ITOCHU STEEL CANADA INC.	CERTIFICATE NO.	1024391-A1-1
SPEC.	CSA G40.21 GR44W	CERTIFICATE DATE	JUN. 27 2013

GOODS DESCRIPTION					TENSILE TEST			CHEMICAL ANALYSIS (%)														
SIZE (mm)	LEN. (m)	QTY (bdl.)	WEIGHT (kg)	HEAT NO.	YP ksi / N/mm²	TS ksi / N/mm²	EL (%)	C	Si	Mn	P	S	Ni	Cr	Mo	Cu		Al	NB		B	
								× 100			× 1000		× 100					× 1000			ppm	
MILD STEEL EQUAL ANGLE BAR																						
B × t					44 MIN	65 90 MIN	20 MIN	22 MAX	40 MAX	50 150 MAX	40 MAX	50 MAX										
2 × 1/4	20	14	25,453	109303	54	76	37	17	18	88	11	12	6	8	2	17			1			
2 × 3/16	20	16	29,831	108548	54	79	36	19	18	93	11	24	6	9	3	21			2			
1-1/2× 1/8	20	2	4,357	108547	56	79	40	18	16	88	10	19	7	8	2	22			1			
SUB TOTAL		32	59,651																			
MILD STEEL FLAT BAR																						
B × t					44 MIN	65 90 MIN	20 MIN	22 MAX	40 MAX	50 150 MAX	40 MAX	50 MAX										
2 × 1/2	20	4	6,838	109299	51	78	32	17	18	90	13	18	7	9	2	36	24		2			
2 × 1/4	20	10	20,836	109301	48	78	23	18	19	88	18	21	8	12	4	37	21		2			
2 × 3/16	20	3	4,930	109298	48	75	26	17	18	85	32	21	8	14	2	36	29		3			
2 × 3/8	20	6	9,373	109298	48	75	26	17	18	85	32	21	8	14	2	36	29		3			
3 × 1/2	20	2	4,630	109300	51	78	35	17	19	85	17	19	8	11	2	36	28		2			
3 × 1/4	20	5	9,050	109302	52	76	38	16	18	89	26	18	8	17	3	37	25		3			
3 × 3/8	20	4	6,835	109300	51	78	35	17	19	85	17	19	8	11	2	36	28		2			
4 × 1/2	20	4	6,838	109656	50	75	31	17	18	88	16	25	8	10	2	36	29		3			
4 × 1/4	20	2	4,343	109658	51	74	23	16	17	89	14	15	7	12	2	35	23		2			
4 × 3/16	20	3	4,524	109658	51	74	23	16	17	89	14	15	7	12	2	35	23		2			
4 × 3/8	20	2	4,168	109656	50	75	31	17	18	88	16	25	8	10	2	36	29		3			

REMARK:

QC-09-04

WE HEREBY CERTIFY THAT THE MATERIAL DESCRIBED HEREIN HAS BEEN MANUFACTURED AND TESTED WITH SATISFACTORY RESULTS IN ACCORDANCE WITH THE REQUIREMENT OF THE ABOVE MATERIAL SPECIFICATION.

MANAGER
METALLURGICAL
R&D DEP.

郭志毅

NUCOR
NUCOR CORPORATION
NUCOR STEEL UTAH

Mill Certification
7/1/2013

PO Box 100
7285 West 21200 North
PLYMOUTH, UT 84330
(435) 458-2300
Fax: (435) 458-2309

Sold To: C W CARRY(1967) LTD
5815 75TH ST
EDMONTON AB T5J 2P4
CANADA

Ship To: C.W. CARRY LTD.
5815 - 75TH ST.
EDMONTON AB T6E 0T3
CANADA
(780) 465-0381
Fax: (780) 466-8263

Customer P.O.	36472	Sales Order	199657.14
Product Group	Merchant Bar Quality	Part Number	201252502404460
Grade	CSA G40.21-04 44W/ASTM A36/A36M-08	Lot #	PL1320207201
Size	1-1/4x1-1/4x1/4 Angle	Heat #	PL13202072
Product	1-1/4x1-1/4x1/4 Angle 20' A36/44W	B.L. Number	U1-441976
Description	A36/44W	Load Number	U1-256365
Customer Spec		Customer Part #	

I hereby certify that the material described herein has been manufactured in accordance with the specifications and standards listed above and that it satisfies those requirements.

Roll Date: 5/17/2013 Melt Date: 3/26/2013 Qty Shipped LBS: 3,994 Qty Shipped Pcs: 104

ASTM A36/A36M-08, A709/709M-11 GR36, ASME SA36-10 Ed '11 Ad.
ASME SA36-2007 EDITION-2011 ADDENDA
ASTM A709/A709M-11 GR 36 [250]

C	Mn	P	S	Si	Cu	Ni	Cr	Mo	V	Cb	CE4020
0.15%	0.75%	0.015%	0.030%	0.21%	0.28%	0.11%	0.18%	0.036%	0.0078%	0.005%	0.35%

CE4020: G40.20 CARBON EQUIVALENT

Yield 1: 50,705psi (350MPa) Tensile 1: 71,798psi (495MPa) Elongation: 28% in 8"(% in 203.3mm)
Yield 2: 51,455psi (355MPa) Tensile 2: 72,530psi (500MPa) Elongation 27% in 8"(% in 203.3mm)

Specification Comments:

Comments: NUCOR - PLYMOUTH IS AN I.S.O. 9001 AND AN A.B.S. CERTIFIED MILL
CMTR COMPLIES WITH DIN EN 10204 - 3.1.B

ALL MANUFACTURING PROCESSES OF THE STEEL MATERIALS IN THIS PRODUCT, INCLUDING MELTING, HAVE OCCURRED WITHIN THE UNITED STATES. ALL PRODUCTS PRODUCED ARE WELD FREE. MERCURY, IN ANY FORM, HAS NOT BEEN USED IN THE PRODUCTION OR TESTING OF THIS MATERIAL.

Cory Anthony
Division Metallurgist

Sep 12/13

Cl. =

HT# NW6489

64880

Test Certificate

Form TC1: Revision 1: Date 31 Oct 2000

EVRAZ EVRAZ INC. NA 8250 130th Street, Surrey, BC, V3W 8J9

Customer:
PRICE STEEL CO. LTD.
13500 - 156TH STREET

EDMONTON
AB T5V1L3

Customer P.O. No.: 32546F

Mill Order No.: 41-247812-07

Shipping Manifest : ST052040

Product Description: CSA G40.21(2004)44W/300W / ASTM A36(05) A709(01A)36/ASME SA36(01ED)

Ship Date: 07 Feb 13
Cert Date: 07 Feb 13

Cert No: 011146013
(Page 1 of 1)

Size: 0.375 X 96.00 X 288.0 (IN)

Tested Pieces				Tensiles					Charpy Impact Tests							
Heat Id	Piece Id	Piece Dimensions	Tst Loc	YS (PSI)	UTS (PSI)	%RA	Elong % 2in 8in	Tst Dir	Average Hardness	Abs. Energy(FTLB) 1 2 3 Avg	% Shear 1 2 3 Avg	Tst Tmp	Tst Dir	Tst Siz (mm)	BDWTT Tmp %Shr
NW6457	A91801A	0.375 X 96.00 (CUT)	L	55000	71000		32	T							
			C	53000	71000		35	T							
NW6489	A91807A	0.375 X 96.00 (CUT)	L	52000	72000		31	T							
			C	53000	72000		33	T							

Chemical Analysis

Heat Id	C	Mn	P	S	Si	Tot Al	Cu	Ni	Cr	Mo	Ch	V	Ti	B	N	ORGN
NW6457	.14	.92	.013	.006	.23	.041	.01	.05	.02	.00	.005	.007	.002	.0000	.0044	CAN
NW6489	.14	.86	.012	.007	.22	.031	.01	.05	.02	.00	.005	.005	.002	.0000	.0039	CAN

MATERIAL MARKED WITH AN ASTERISK IS PRODUCED FROM COIL
* NW6457 A91801A PCES: 9, WGT: 26463 * NW6489 A91807A PCES: 16, WGT: 47045

(U) Cust Part # :

WE HEREBY CERTIFY THAT THIS MATERIAL WAS TESTED IN ACCORDANCE WITH THE APPROPRIATE SPECIFICATION

Greg Balsdon
CHECKED BY

Sep 12/13
D-F

HT# 493302

Test Certificate

EVRAZ EVRAZ INC. NA
8250 130th Street, Surrey, BC, V3W 8J9

Form TC1: Revision 1: Date 31 Oct 2000

Customer:
WILKINSON STEEL & METALS
9525 60TH AVENUE

EDMONTON
AB T6E0C3

Customer P.O. No.: P30515EM001E | Mill Order No.: 41-249399-03 | Shipping Manifest : ST052928

Product Description: CSA G40.21(2004)44/300/38W;ASTM A36(04)
A709(01A)36/ASME SA36(01ED)
CSA G40.21(2004)260W

Ship Date: 13 Jun 13
Cert Date: 13 Jun 13

Cert No: 011148779
(Page 1 of 1)

Size: 0.500 X 60.00 X 120.0 (IN)

Tested Pieces				Tensiles						Charpy Impact Tests									
Heat Id	Piece Id	Piece Dimensions	Tst Loc	YS (PSI)	UTS (PSI)	%RA	Elong % 2in 8in	Tst Dir	Average Hardness	Abs. Energy(FTLB) 1 2 3 Avg	% Shear 1 2 3 Avg	Tst Tmp	Tst Dir	Tst Siz (mm)	BDWTT Tmp %Shr
493302	A0013	0.495 X 60.00 (CUT)	L	64000	75000		34	T							
			C	63000	76000		32	T							
493302	A0016	0.495 X 60.00 (CUT)	L	63000	77000		32	T							
			C	64000	77000		33	T							
511348	A0010	0.495 X 60.00 (CUT)	L	63000	74000		35	T							
			C	62000	74000		36	T							

Chemical Analysis

Heat Id	C	Mn	P	S	Si	Tot Al	Cu	Ni	Cr	Mo	Cb	V	Ti	B	N	ORGN
493302	.06	.60	.006	.004	.13	.037	.21	.07	.10	.02	.024	.001	.001	.0001	.0086	CAN
511348	.06	.59	.005	.002	.13	.036	.20	.08	.10	.03	.024	.001	.001	.0001	.0069	CAN

MERCURY IS NOT A METALLURGICAL COMPONENT OF THE STEEL AND NO MERCURY WAS INTENTIONALLY ADDED
DURING THE MANUFACTURE OF THIS PRODUCT
MATERIAL MARKED WITH AN ASTERISK IS PRODUCED FROM COIL
* 511348 A0010 PCES: 36, WGT: 36756 * 493302 A0015 PCES: 4, WGT: 4084

(U) Cust Part # :

WE HEREBY CERTIFY THAT THIS MATERIAL WAS TESTED IN ACCORDANCE WITH THE APPROPRIATE SPECIFICATION

Greg Balsdon
CHECKED BY

S30729TR009-1 PROCAM MACHINE - Cert#: P30515EM001.493302 - P.O.#: DEREK

Sep 13/13

D.F

HT# 3256431

62875

ORIGINAL

MILL TEST CERTIFICATE

DONGKUK STEEL

Order No. : J11B400058
PO No. : LPP201110009
Commodity : STEEL PLATE
Specification : ASTM A36/CSA G40.21 300W

Supplier : DONGKUK INTERNATIONAL,INC.
Customer : SALZGITTER MANNESMANN INTERNAT

Certificate No. : DP3-2-120102-016-004
Date of issue : Jan. 02, 2012

Dimension Unit inch: ", mm: Space	Product No	Quantity	Weight kg	Heat No	Position	Tensile Test GL	Tensile Test YP N/mm²	Tensile Test TS N/mm²	Tensile Test EL %	Division	C 2	Si 2	Mn 2	P 3	S 3	Cr 3	Ni 2	Cu 2	Mo 3	Nb 3	V 3	Ceq 3	Remarks
28.57*2438*7315 1.125"X96"X288" Specimen No :DP06007716-a	A218444-01,02		4,001	KK568960	T	1	381	501	28	L	14	32	104	15	2	10	2	1	2	13	1	318	11E
	Sub Total (30)	2	8,002																				
31.75*2438*7315 1.25"X96"X288" Specimen No :DP06394616-a	A217305-01,02		4,447	K1825730	T	1	409	533	22	L	16	32	109	17	3	20	1	1	1	15	2	348	11E
	Sub Total (40)	2	8,894																				
31.75*2438*7315 1.25"X96"X288" Specimen No :DP06399918-a	A216728-01,02		4,447	K1825743	T	1	392	525	22	L	15	32	112	14	3	20	1	1	1	15	2	343	11E
	Sub Total (40)	2	8,894																				
31.75*2438*7315 1.25"X96"X288" Specimen No :DP06396214-a	A218379-01,02		4,447	K1825756	T	1	389	498	28	L	15	31	110	13	3	20	1	1	1	17	2	339	11E
	Sub Total (40)	2	8,894																				
31.75*2438*7315 1.25"X96"X288" Specimen No :DP06403314-a	A216727-01,02		4,447	K3255431	T	1	399	515	22	L	15	29	114	17	3	30	1	2	1	15	2	349	11E
	Sub Total (40)	2	8,894																				

- Tensile Test Direction-Transverse
- Ceq = C+Mn/6+(Ni+Cu)/15+(Cr+Mo+V)/5
- Supply Condition - DKS in Line Accelerated Cooling
- Chemical Composition Unit(%) : 2-x100, 3-x1000, 4-x10000

We hereby certify that the material has been made by Basic oxygen process (Fully killed steel, Fine grain practice) and satisfactorily tested in accordance with above specification requirements called for by the above order. This mill test certificate has been issued in compliance with EN 10204 3.1.

When using the ordered product for other uses, rather than the above specification use, product damage and safety accidents may be caused.

- Specimen No. : a-Tension
- Position : T-Top, M-Middle, B-Bottom
- Division : L-Ladle Analysis, P-Product Analysis
- Sub(Sub Size, Real Value, mm) : Blank-Full Size, 1-7.5*10, 2-5.0*10
- GL(Gauge Length, mm) : 1-200, 2-100, 3-80, 4-70, 5-50, 6-5.65√A, 7-5d, 8-4d, 9-8d
- T(S).Al : Total(Soluble) Al *Tr : Trace
- NRL Result : G-No Break, B-Break
- TTP(Through Thickness Position) : 1-Surface, 2-1/4T, 3-1/2T

Surveyor to | Surveyor to | Surveyor to | Surveyor to | Chief of Quality Control Team

ORIGINAL

Sep 12/13
D.F

HT# 7344P3

ESSAR STEEL

ESSAR STEEL ALGOMA INC.,105 West Street, Sault Ste. Marie,Ontario, Canada P6A 7B4

SO No.,Item & Date.: 8010145 000090 2013/06/13	**Shipment No.& Date.:** 1000051894 2013/06/13	**TC No., Date & Time :** ESA-79959 2013/06/14 - 14:24:11
Sold to Customer Name and Address : CANADIAN PLATE AND PROFILES IN KAMATO ROAD 920 MISSISSAUGA,Ontario,Canada L4W 2R6	**Ship to Customer Name and Address:** CANADIAN PLATE AND PROFILES IN KAMATO ROAD 920 MISSISSAUGA,Ontario,Canada L4W 2R6	**Customer PO NO./Item:** 19818-STK / 9 **BOL NO.:** 1000051894 **Cust.Part No.:** **Carrier :** NATIONAL TRANSPORTATION - 8701 (1124)

Customer Specification : HR STEEL PLATE HSLA Multi Cert CSA G40.21 44W (04) / ASTM A36 (12) / ASME SA36 (11A) As Rolled Std Thickness Tol Structural Steel Top and Bottom Standard Surface Flatness 1/2 A6 Fine Grain Fully Killed

Supplementary Instructions : Test Cert 1:drafting@canadianplate.com Test Cert 2: 905-206-1370

Insp T/R : Test Report As Per Spec

Cust Use : STRUCTURAL STEEL

ESSAR STEEL ALGOMA INC. HEREBY CERTIFIES THAT THE MATERIAL HEREIN DESCRIBED WAS MADE AND TESTED IN ACCORDANCE WITH THE RULES OF THE SPECIFICATION SHOWN. ALL RESULTS ARE RETAINED IN ACCORDANCE WITH THE COMPANY'S STANDARD RECORD KEEPING PRACTICES.
THIS MILL TEST REPORT MAY NOT BE REPRODUCED EXCEPT IN FULL WITHOUT WRITTEN APPROVAL OF ESSAR STEEL ALGOMA INC. IF YOU RECEIVE THIS DOCUMENT AND ARE NOT THE INTENDED RECEIVER, PLEASE CALL (705)945-4095 FOR INSTRUCTIONS ON METHOD OF DISPOSAL OF DOCUMENT.

MEETS EN 10204:2004 TYPE 3.1
ISO QUALITY AND ENVIRONMENTAL CERTIFICATES AVAILABLE AT WWW.ESSARSTEELALGOMA.COM

ALL HEATS FULLY KILLED.
HEATS INDICATED WITH (*) FINE GRAINED.
HEATS INDICATED WITH (+) MADE IN CANADA WITH DOMESTIC AND NORTH AMERICAN MATERIALS.

Dimensions (T x W x L)	Batch No.	Heat No-MS	Quantity	Pcs
1.5000 " x 120.000 " x 288.00 "	AE2718	7344P3-51	14,702 LB	1

CHEMICAL PROPERTIES

Heat No. (wt%)	C	Mn	P	S	Si	Cr	Ni	Cu	Mo	Al	Nb	V	Ti	DO
+ 7344P3*	0.15	1.24	0.012	0.003	0.350	0.20	0.02	0.04	0.00	0.026	0.000	0.048	0.003	0.41

MECHANICAL PROPERTIES

Tensile Tests

Heat No.	Batch No.	SRCE	LAB	GAUGE	COND	METH	DIR	LOC	YIELD(KSI)	TENSILE(KSI)	EL SCALE	ELONG(%)
7344P3		166"	ALG	1.5000	AR	.2	T	B	51.0	79.0	2"	29
7344P3		166"	ALG	1.5000	AR	.2	T	B	52.0	79.0	2"	33

K. UGHADPAGA
MANAGER METALLURGICAL SERVICES

****WARNING**** THE TEST RESULTS AND VALUES REPORTED HEREIN INDICATE ONLY THAT (1) THE PARTICULAR STEEL FOR WHICH THIS CERTIFICATE IS ISSUED MEETS THE MINIMUM SPECIFIED YIELD STRENGTH AND (2) THE ANALYSIS AND PHYSICAL PROPERTIES OF SUCH STEEL ARE IN CONFORMANCE WITH THE REQUIREMENTS OF THE SPECIFICATION INDICATED. THE RESULTS OR VALUES REPORTED HEREIN CAN NOT BE USED TO QUALIFY THE STEEL FOR ANY SPECIFICATION OTHER THAN THE ONE INDICATED AND CAN NOT BE RELIED UPON FOR ANY PURPOSE (INCLUDING DESIGN OR CALCULATIONS) AS REPRESENTING THE ACTUAL STRENGTH OF SUCH STEEL.

PLANT NORTH

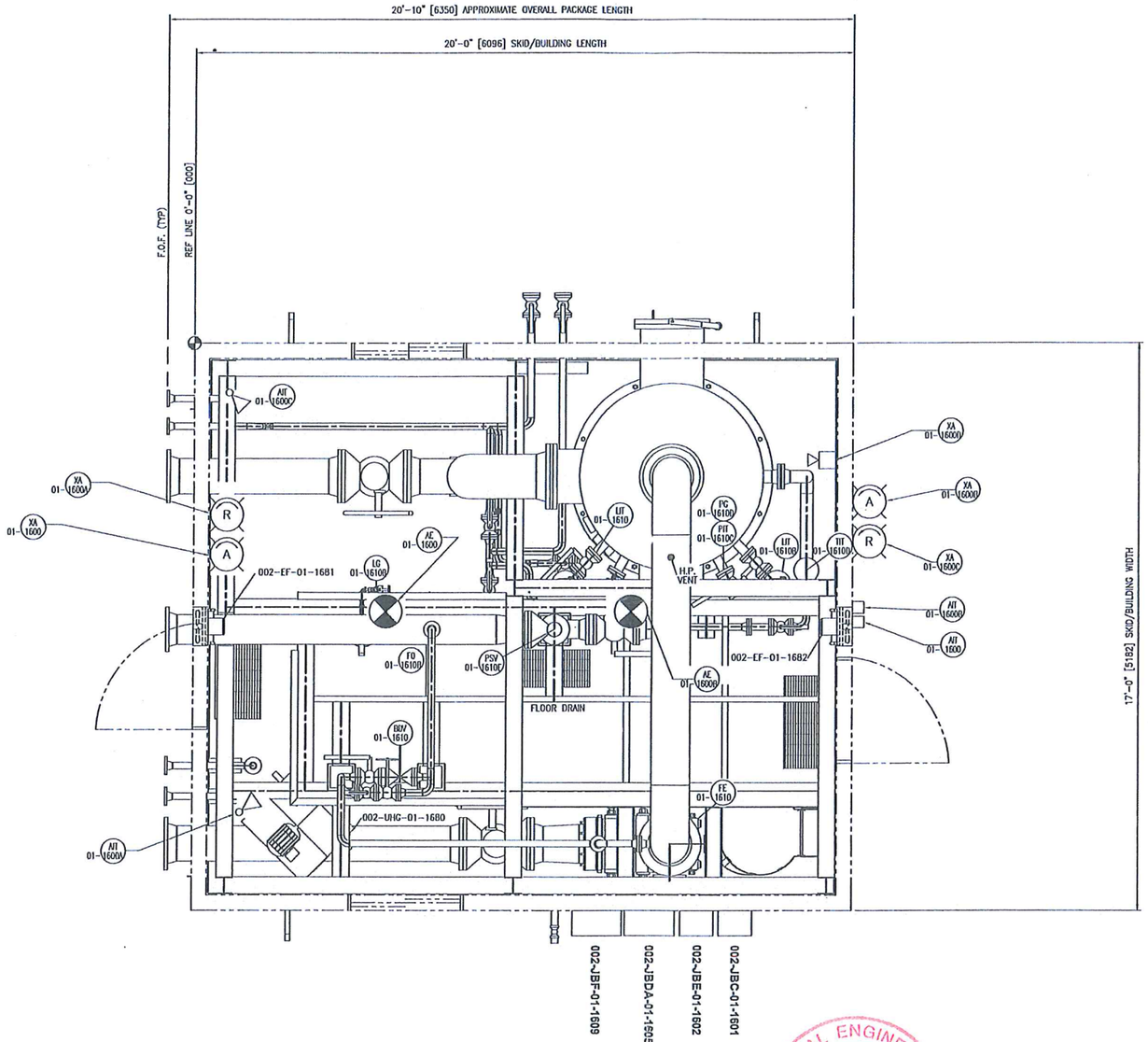

PLAN VIEW
SCALE 1/2"=1'-0"

NOTES:

PROFESSIONAL ENGINEER ALBERTA
R. G. SNOWDON
MAR 1 4 2014

NO.	REVISION	BY	CHK	DATE
1	RE-ISSUED FOR CONSTRUCTION	MA		03/08/14
0	ISSUED FOR CONSTRUCTION	MA		10/21/13
A	ISSUED FOR APPROVAL	MA		10/09/13

CUSTOMER REFERENCE: –

5Blue Process Equipment Inc.
www.5Blue.com

CUSTOMER: DEVON NEC CORPORATION
JOB NO.: 5B1108-30
PROJECT: FERRIER CENTRAL OIL BATTERY – LIQUID EXTRACTION PLANT (LEP)
LOCATION: LSD 11-02-039-08 W5M
TITLE: CARDIUM INLET SEPARATOR PACKAGE (002-PK-01-1600)
GENERAL ARRANGEMENT – INSTRUMENT LAYOUT

DRAWN	CHK	APP	SCALE	DATE	DWG NO	SHT TTL
RR			1/2"=1'-0"	20/05/13	LAY1600-02	1

PLANT NORTH

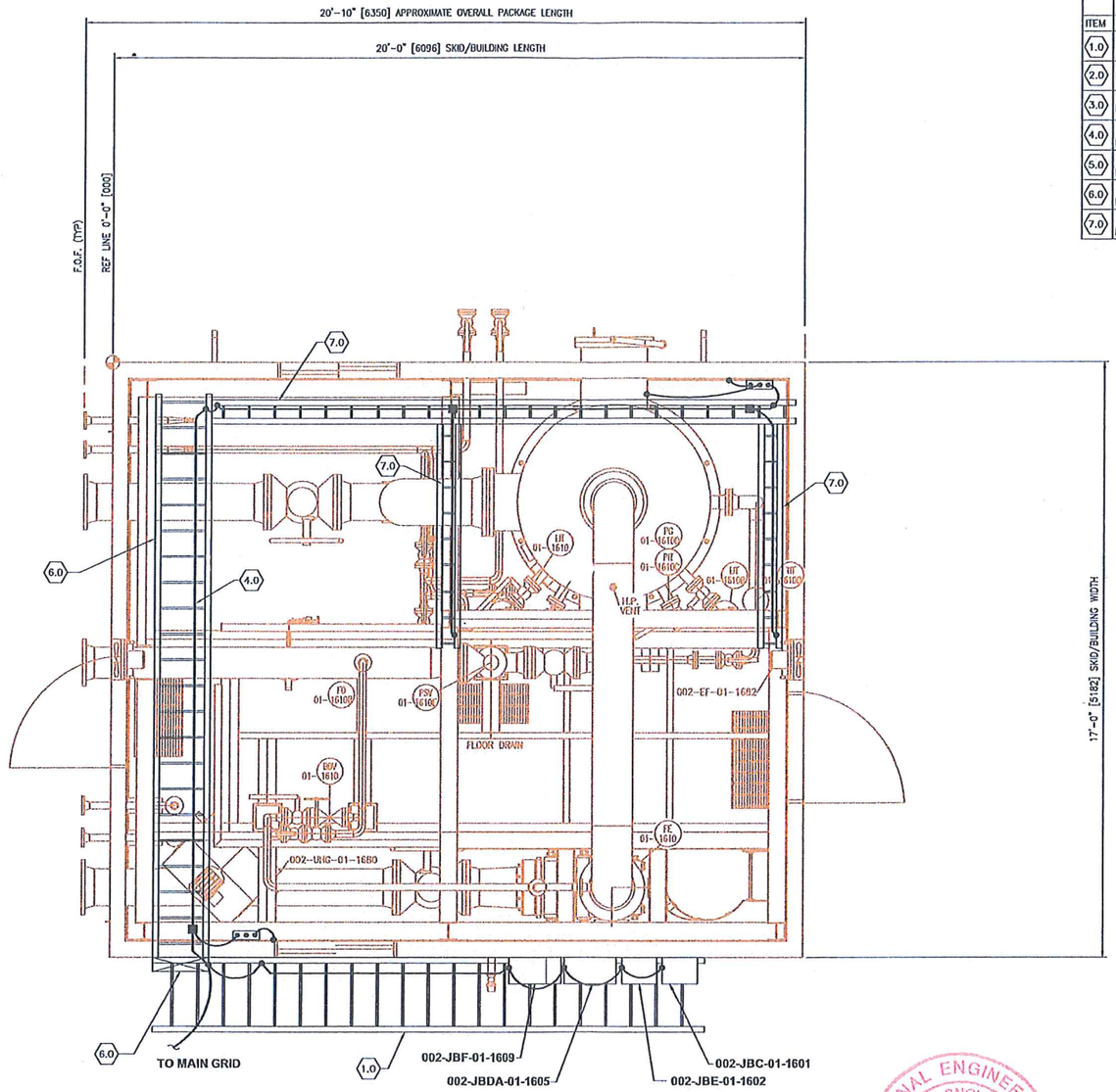

PLAN VIEW
SCALE 1/2"=1'-0"

BILL OF MATERIAL

ITEM	QTY	DESCRIPTION	MODEL #
1.0	AS REQ	600mm ALUMINUM CABLE TRAY, CLASS E STRAIGHT 225 RUNG SPAN	T&B AH3624L09-6
2.0	AS REQ	300mm ALUMINUM CABLE TRAY, CLASS E STRAIGHT 225 RUNG SPAN	T&B AH3612L09-6
3.0	AS REQ	600mm ALUMINUM CABLE TRAY, CLASS E ELBOW HORIZONTAL 90° 600mm RADIUS, 225 RUNG	T&B AUF624LHB9024
4.0	AS REQ	#2/0 AWG GROUND WIRE – GREEN	
5.0	AS REQ	600mm ALUMINUM CABLE TRAY, CLASS E HORIZONTAL TEE 600mm RADIUS, 225 RUNG	T&B AHF612LHT24
6.0	AS REQ	450mm ALUMINUM CABLE TRAY, CLASS E STRAIGHT 225 RUNG SPAN	T&B AH3618L09-6
7.0	AS REQ	150mm ALUMINUM CABLE TRAY, CLASS E STRAIGHT 225 RUNG SPAN	T&B AH3606L09-6

PROFESSIONAL ENGINEER R.G. SNOWDON ALBERTA
MAR 14 2014

NOTES:

NO.	REVISION	BY	CHK	DATE
1	RE-ISSUED FOR CONSTRUCTION	MA		03/08/14
0	ISSUED FOR CONSTRUCTION	MA		10/21/13
A	ISSUED FOR APPROVAL	MA		10/09/13

CUSTOMER REFERENCE: --

5Blue Process Equipment Inc.
www.5Blue.com

CUSTOMER: DEVON NEC CORPORATION
JOB NO.: 5B1108-30
PROJECT: FERRIER CENTRAL OIL BATTERY -- LIQUID EXTRACTION PLANT (LEP)
LOCATION: LSD 11-02-039-08 W5M
TITLE: CARDIUM INLET SEPARATOR PACKAGE (002-PK-01-1600)
GENERAL ARRANGEMENT – CABLE TRAY AND GROUNDING LAYOUT

DRAWN	CHK	APP	SCALE	DATE	DWG NO	SHT TTL
RR			1/2"=1'-0"	20/05/13	LAY1600-03	1

PLANT NORTH

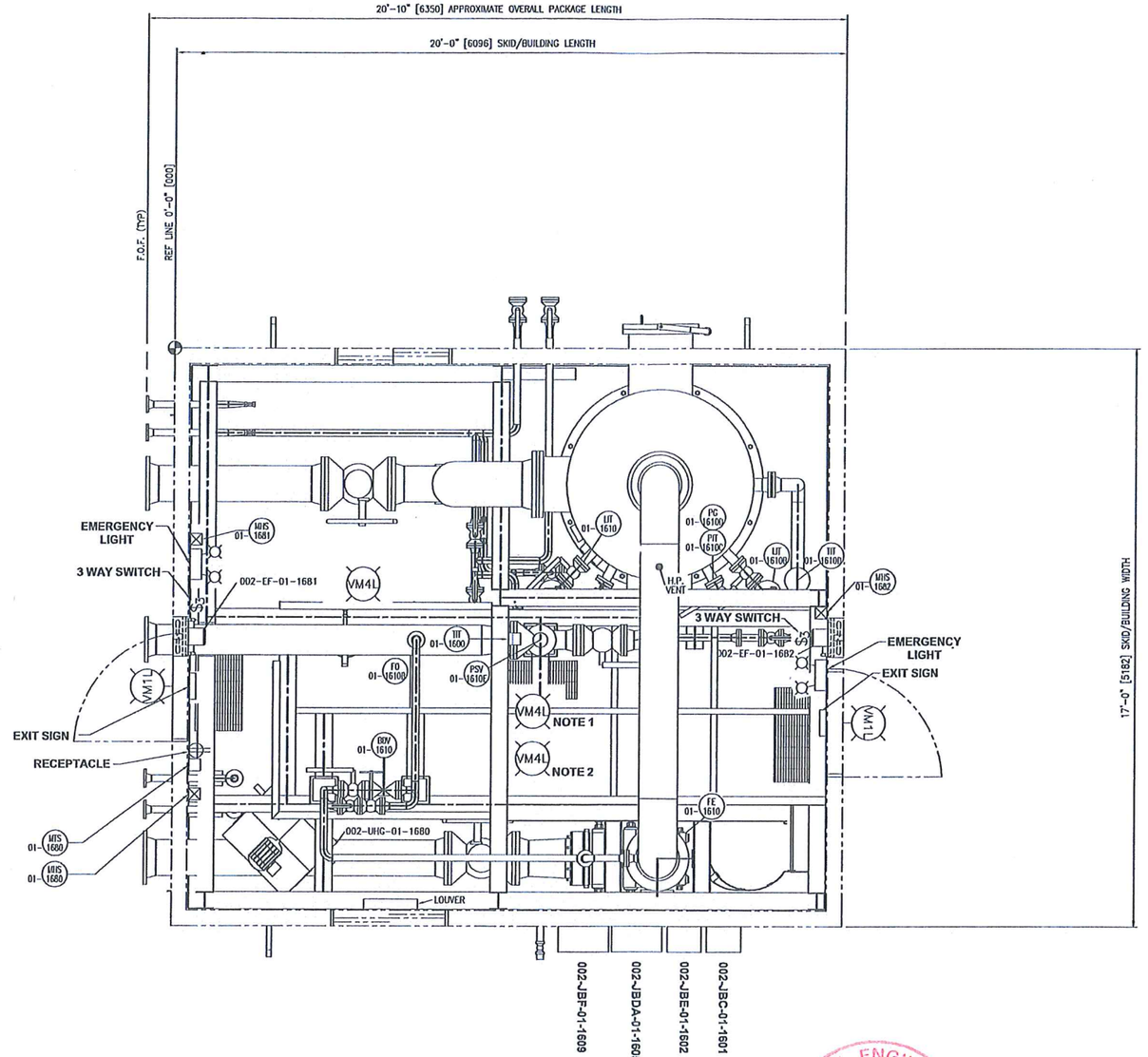

PLAN VIEW
SCALE 1/2"=1'-0"

NOTES:

1) INSTALL LIGHT ABOVE CATWALK.
2) INSTALL LIGHT BELOW CATWALK.

PROFESSIONAL ENGINEER R. G. SNOWDON ALBERTA

MAR 14 2014

NO.	REVISION	BY	CHK	DATE
1	RE-ISSUED FOR CONSTRUCTION	MA		03/08/14
0	ISSUED FOR CONSTRUCTION	MA		10/21/13
A	ISSUED FOR APPROVAL	MA		10/09/13

CUSTOMER REFERENCE: –

5Blue Process Equipment Inc.
www.5Blue.com

CUSTOMER: DEVON NEC CORPORATION
JOB NO. 5B1108-30

PROJECT:
FERRIER CENTRAL OIL BATTERY – LIQUID EXTRACTION PLANT (LEP)
LOCATION: LSD 11-02-039-08 W5M

TITLE:
CARDIUM INLET SEPARATOR PACKAGE (002-PK-01-1600)
GENERAL ARRANGEMENT – POWER AND CONTROL LYOUT

DRAWN	CHK	APP	SCALE	DATE	DWG NO	SHT TTL
RR			1/2"=1'-0"	20/05/13	LAY1600-01	1

Date: 2007.03.29 04:01pm File Name: C:\1 Snowdon Consulting Inc\Electrical Tools and Templates\SCI Drawings\SCI Title Block 2.DWG By: RGS

002-JBDA-01-1605

ANALOG / DISCRETE JUNCTION BOX

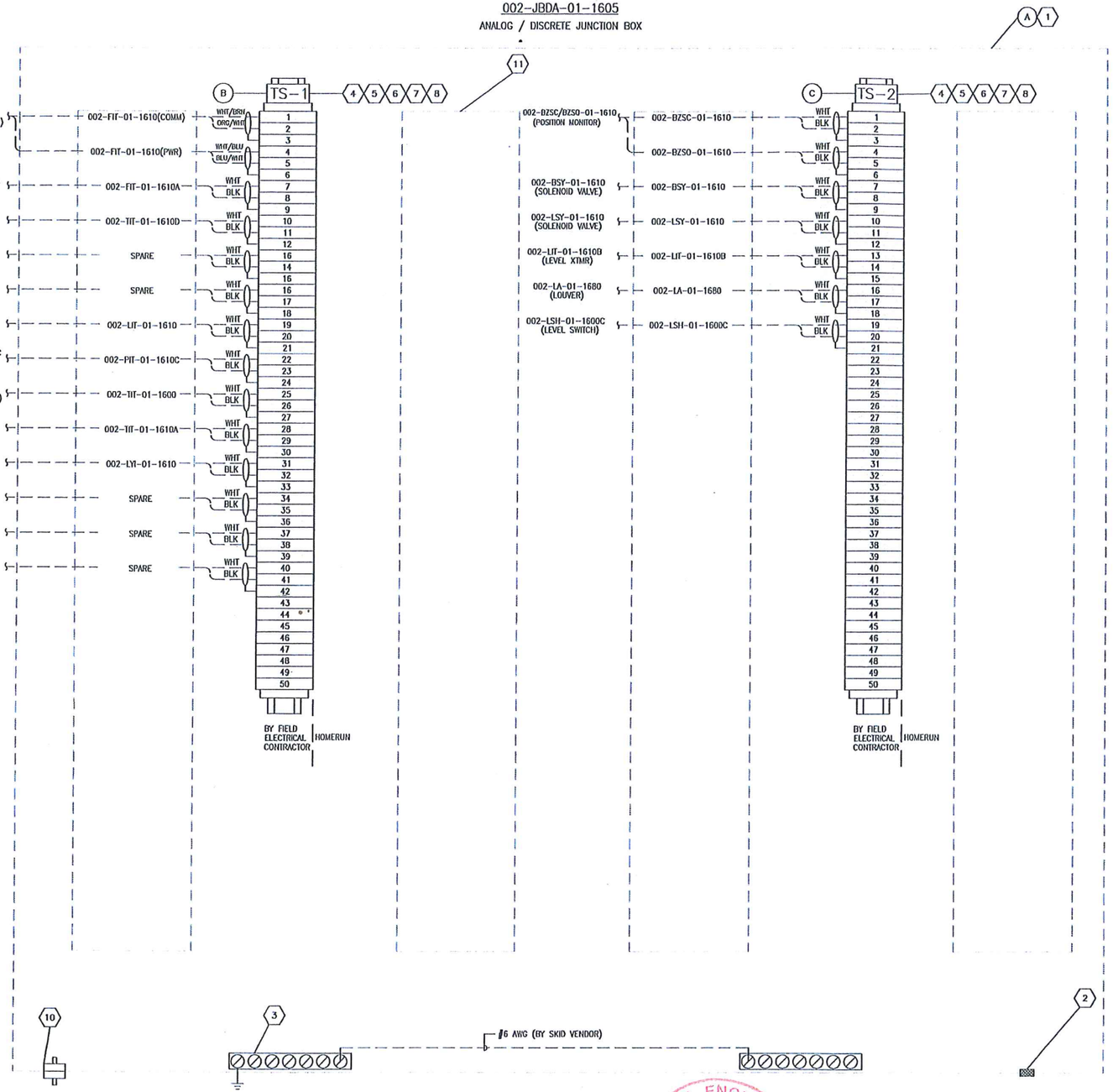

BILL OF MATERIAL

ITEM	QTY	DESCRIPTION	MODEL #
1	1	HOFFMAN FIBREGLASS, SINGLE DOOR WALL MOUNTED ENCLOSURE: – 614mmH X 614mmW X 305MMD (EXTERIOR DIMENSIONS) – c/w (1) BACKPAN	HOFFMAN A24H2412CQRLP
2	1	BREATHER/ DRAIN	CROUSE-HINDS ECD-385
3	2	BACKBURN LAY-IN LUG	THOMAS & BETTS LL306
4	AS REQ	WEIDMULLER TS32 MOUNTING RAIL WITH FOUR TST-2 SUPPORTS	0122800000, 0101700000
5	2	WEIDMULLER SCHT-5 GROUP TAG HOULDER	0292460000
6	4	WEIDMULLER EWK-1 END BRACKET	0206160000
7	2	WEIDMULLER AP SAK-10 END PLATE	0117960000
8	100	WEIDMULLER SAK-4 TERMINAL	1716240000
9	AS REQ	CORROSION INHIBITOR CID-101 (AS PER DEVON SPEC)	CROUSE-HINDS CID-101
10	1	LONG STUD SERVIT POST FOR EXTERNAL GRND (# 2AWG)	THOMAS & BETTS SP2SL
11	AS REQ	2" X 3" WIRING DUCT WITH COVER (WHITE), PANDUIT	F2X3WH6 C2WH6

NAMEPLATE ENGRAVING SCHEDULE

TAG	DESCRIPTION	SIZE	COLOR
A	002-JBDA-01-1605 ANALOG / DISCRETE JUNCTION BOX	280mm X 50mm 20mm TEXT	BLACK ON WHITE
B	TS-1	20mm X 45mm 5mm TEXT	BLACK ON WHITE
C	TS-2	20mm X 45mm 5mm TEXT	BLACK ON WHITE

PERMIT TO PRACTICE
SNOWDON CONSULTING INC.
PERMIT NUMBER: P-7513
The Association of Professional Engineers, Geologists and Geophysicists of Alberta

PROFESSIONAL ENGINEER ALBERTA R. G. SNOWDON
MAR 14 2014

No.	DATE	REVISION	PROJECT	DRAWN	CHECK	ENG.
1	03/08/14	RE-ISSUED FOR CONSTRUCTION		MA	RGS	RGS
0	10/21/13	ISSUED FOR CONSTRUCTION		MA	RGS	RGS
A	07/26/16	ISSUED FOR APPROVAL		MA	RGS	RGS

SNOWDON CONSULTING INC.

DEVON NEC CORP.

FERRIER CENTRAL PROCESSING FACILITY
LIQUID EXTRACTION PLANT – CARDIUM GAS SEPARATOR
CARDIUM GAS SEPARATOR PACKAGE (002-PK-01-1600)
JBDA-1605 – ANALOG / DISCRETE JUNCTION BOX

'D' SIZE SCALE: NTS | DWG. No: JBDA-1605 | REV. 1

Date: 2007.03.29 04:01pm File Name: C:\1 Snowdon Consulting Inc\Electrical Tools and Templates\SCI Drawings\SCI Title Block 2.DWG By: RGS

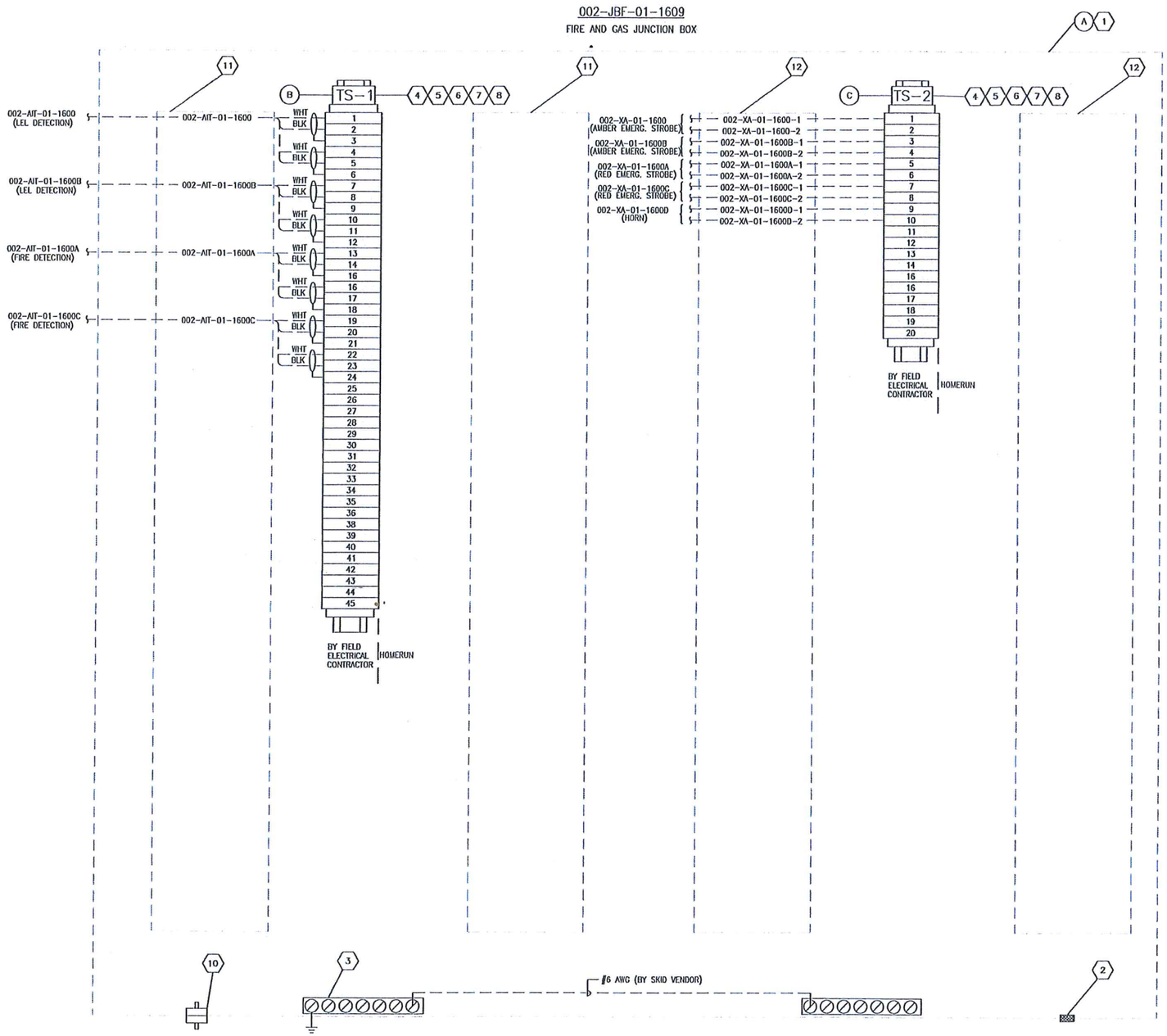

BILL OF MATERIAL

ITEM	QTY	DESCRIPTION	MODEL #
1	1	HOFFMAN FIBREGLASS, SINGLE DOOR WALL MOUNTED ENCLOSURE: - 614mmH X 614mmW X 305MMD (EXTERIOR DIMENSIONS) - c/w (1) BACKPAN	HOFFMAN A24H2412GQRLP
2	1	BREATHER/ DRAIN	CROUSE-HINDS ECD-385
3	2	BACKBURN LAY-IN LUG	THOMAS & BETTS LL306
4	AS REQ	WEIDMULLER TS32 MOUNTING RAIL WITH FOUR TST-2 SUPPORTS	0122800000, 0101700000
5	2	WEIDMULLER SCHT-5 GROUP TAG HOULDER	0292460000
6	4	WEIDMULLER EWK-1 END BRACKET	0206160000
7	2	WEIDMULLER AP SAK-10 END PLATE	0117960000
8	65	WEIDMULLER SAK-4 TERMINAL	1716240000
9	AS REQ	CORROSION INHIBITOR CID-101 (AS PER DEVON SPEC)	CROUSE-HINDS CID-101
10	1	LONG STUD SERVIT POST FOR EXTERNAL GRND (# 2AWG)	THOMAS & BETTS SP2SL
11	AS REQ	2" X 3" WIRING DUCT WITH COVER (24VDC, WHITE), PANDUIT	F2X3WH6 C2WH6
12	AS REQ	2" X 3" WIRING DUCT WITH COVER (120VAC, GREY), PANDUIT	F2X3LG6 C2LG6

NAMEPLATE ENGRAVING SCHEDULE

TAG	DESCRIPTION	SIZE	COLOR
A	002-JBF-01-1609 FIRE AND GAS JUNCTION BOX	280mm X 50mm 20mm TEXT	BLACK ON WHITE
B	TS-1 (24VDC)	20mm X 45mm 5mm TEXT	BLACK ON WHITE
C	TS-2 (120VAC)	20mm X 45mm 5mm TEXT	BLACK ON WHITE
D	SEE DETAIL	160mm X 100mm 5mm TEXT	WHITE ON RED

D

CAUTION

THIS JUNCTION BOX IS SUPPLIED FROM MORE THAN ONE SOURCE OF VOLTAGE

JUNCTION BOX SUPPLY VOLTAGE
120VAC UPS POWER
24VDC UPS POWER

PERMIT TO PRACTICE
SNOWDON CONSULTING INC.
PERMIT NUMBER: P-7513
The Association of Professional Engineers, Geologists and Geophysicists of Alberta

PROFESSIONAL ENGINEER R.G. SNOWDON ALBERTA MAR 14 2014

No.	DATE	REVISION	PROJECT	DRAWN	CHECK	ENG.
1	03/08/14	RE-ISSUED FOR CONSTRUCTION		MA	RGS	RGS
0	10/21/13	ISSUED FOR CONSTRUCTION		MA	RGS	RGS
A	06/26/13	ISSUED FOR APPROVAL		MA	RGS	RGS

SNOWDON CONSULTING INC.

DEVON NEC CORP.

FERRIER CENTRAL PROCESSING FACILITY
LIQUID EXTRACTION PLANT – CARDIUM GAS SEPARATOR
CARDIUM GAS SEPARATOR PACKAGE (002-PK-01-1600)
JBF-1609 – FIRE AND GAS JUNCTION BOX

'D' SIZE SCALE: NTS | DWG. No: JBF-1609 | REV. 1

Date: 2007.03.29 04:01pm File Name: C:\1 Snowdon Consulting Inc\Electrical Tools and Templates\SCI Drawings\SCI Title Block 2.DWG By: RGS

002-JBC-01-1601

120VAC CONTROL WIRING JUNCTION BOX

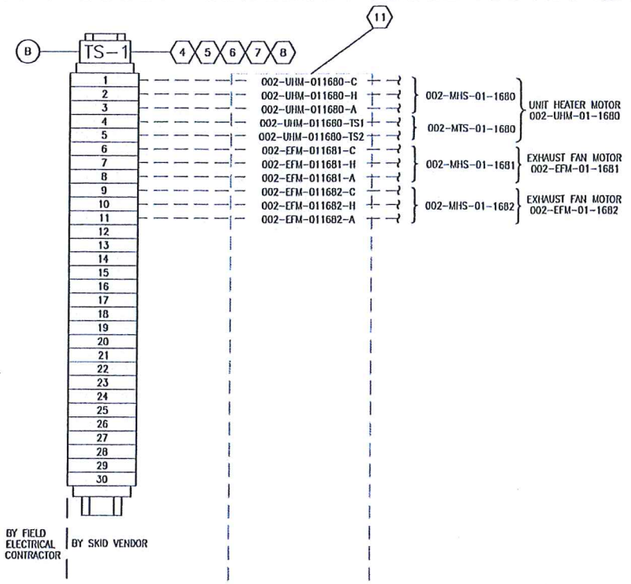

LEGEND:

CONDUCTOR TAGGING
002-PM-0112XX-X

- HOA SWITCH
  C-COMMON CONDUCTOR
  H-HAND CONDUCTOR
  A-AUTO CONDUCTOR
- MOTOR TAG
- FACILITY

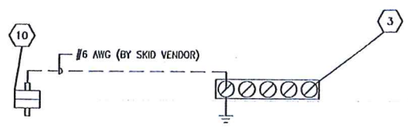

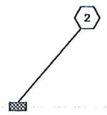

BILL OF MATERIAL

ITEM	QTY	DESCRIPTION	MODEL #
1	1	HOFFMAN FIBREGLASS, SINGLE DOOR WALL MOUNTED ENCLOSURE: - 513mmH X 413mmW X 305MMD (EXTERIOR DIMENSIONS) - c/w (1) BACKPAN	HOFFMAN A20H16126QRLP
2	1	BREATHER/ DRAIN	CROUSE-HINDS ECD-385
3	AS REQ	GROUND BAR	-
4	AS REQ	WEIDMULLER TS32 MOUNTING RAIL WITH FOUR TST-2 SUPPORTS	0122800000, 0101700000
5	1	WEIDMULLER SCHT-5 GROUP TAG HOULDER	0292460000
6	2	WEIDMULLER EWK-1 END BRACKET	0206160000
7	1	WEIDMULLER AP SAK-10 END PLATE	0117960000
8	30	WEIDMULLER SAK-4 TERMINALS	1716240000
9	AS REQ	CORROSION INHIBITOR CID-101 (AS PER DEVON SPEC)	CROUSE-HINDS CID-101
10	1	LONG STUD SERVIT POST FOR EXTERNAL GRND (# 2AWG)	THOMAS & BETTS SP2SL
11	AS REQ	2" X 3" WIRING DUCT WITH COVER (120VAC, GREY), PANDUIT	F2X3LG6 C2LG6

NAMEPLATE ENGRAVING SCHEDULE

TAG	DESCRIPTION	SIZE	COLOR
A	002-JBC-01-1601 120VAC CONTROL JUNCTION BOX	300mm X 50mm 20mm TEXT	BLACK ON WHITE
B	TB-1	20mm X 45mm 5mm TEXT	BLACK ON WHITE
C	WARNING MORE THAN ONE VOLTAGE SOURCE	75mm X 150mm 12mm TEXT	WHITE ON RED

PERMIT TO PRACTICE
SNOWDON CONSULTING INC.
PERMIT NUMBER: P-7513
The Association of Professional Engineers, Geologists and Geophysicists of Alberta

PROFESSIONAL ENGINEER R. G. SNOWDON ALBERTA
MAR 14 2014

No.	DATE	REVISION	PROJECT	DRAWN	CHECK	ENG.
1	03/08/14	RE-ISSUED FOR CONSTRUCTION		MA	RGS	RGS
0	10/21/13	ISSUED FOR CONSTRUCTION		MA	RGS	RGS
A	07/26/13	ISSUED FOR APPROVAL		MA	RGS	RGS

SNOWDON CONSULTING INC.

DEVON NEC CORP.

FERRIER CENTRAL PROCESSING FACILITY
LIQUID EXTRACTION PLANT -CARDIUM GAS SEPARATOR
CARDUM GAS SEPARATOR PACKAGE (002-PK-01-1600)
002-JBC-01-1601 - 120VAC CONTROL WIRING JUNCTION BOX

'D' SIZE SCALE: NTS | DWG. No: JBC-1601 | REV. 1

Date: 2007.02.28 04:01pm File Name: C:\1 Snowdon Consulting Inc\Electrical Tools and Templates\SCI Drawings\SCI Title Block 2.DWG By: RGS

002-JBE-01-1602

120VAC POWER WIRING JUNCTION BOX

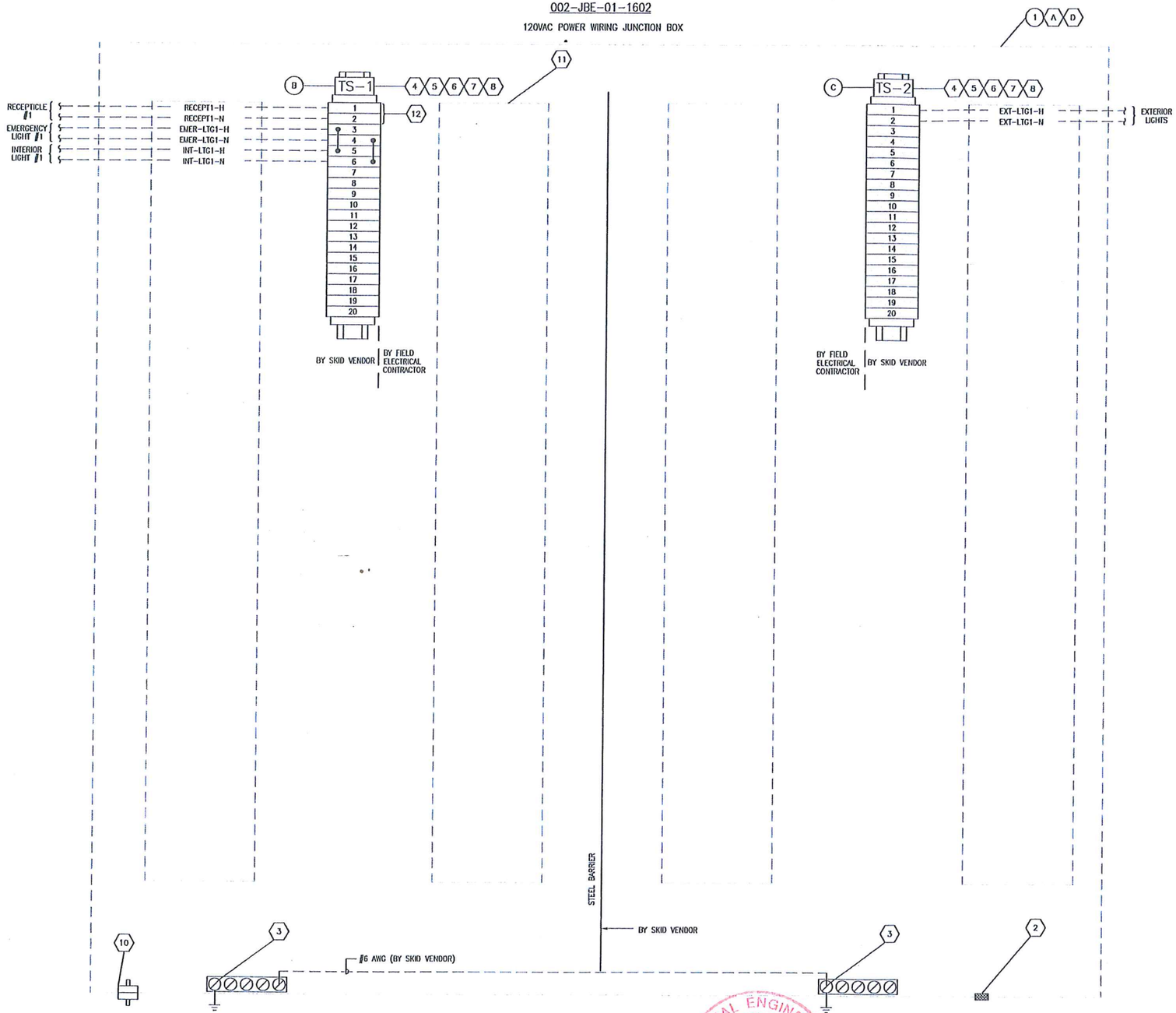

BILL OF MATERIAL

ITEM	QTY	DESCRIPTION	MODEL #
1	1	HOFFMAN FIBREGLASS, SINGLE DOOR WALL MOUNTED ENCLOSURE: - 513mmH X 413mmW X 305MMD (EXTERIOR DIMENSIONS) - c/w (1) BACKPAN	HOFFMAN A20H1612GQRLP
2	1	BREATHER/ DRAIN	CROUSE-HINDS ECD-385
3	AS REQ	GROUND BAR	-
4	AS REQ	WEIDMULLER TS32 MOUNTING RAIL WITH FOUR TST-2 SUPPORTS	0122800000, 0101700000
5	2	WEIDMULLER SCHT-5 GROUP TAG HOULDER	0292460000
6	4	WEIDMULLER EWK-1 END BRACKET	0206160000
7	2	WEIDMULLER AP SAK-10 END PLATE	0117960000
8	38	WEIDMULLER SAK-6N TERMINALS	0193260000
9	AS REQ	CORROSION INHIBITOR CID-101 (AS PER DEVON SPEC)	CROUSE-HINDS CID-101
10	1	LONG STUD SERVIT POST FOR EXTERNAL GRND (# 2AWG)	THOMAS & BETTS SP2SL
11	AS REQ	2" X 3" WIRING DUCT WITH COVER (120VAC, GREY), PANDUIT	F2X3LGG C2LG6
12	2	WEIDMULLER SAK-10 TERMINALS	0110060000

NAMEPLATE ENGRAVING SCHEDULE

TAG	DESCRIPTION	SIZE	COLOR
A	002-JBE-01-1602 120VAC POWER JUNCTION BOX	300mm X 50mm 20mm TEXT	BLACK ON WHITE
B	TB-1	20mm X 45mm 5mm TEXT	BLACK ON WHITE
C	TB-2	20mm X 45mm 5mm TEXT	BLACK ON WHITE
D	WARNING MORE THAN ONE VOLTAGE SOURCE	75mm X 150mm 12mm TEXT	WHITE ON RED

PERMIT TO PRACTICE
SNOWDON CONSULTING INC.
PERMIT NUMBER: P-7513
The Association of Professional Engineers, Geologists and Geophysicists of Alberta

PROFESSIONAL ENGINEER ALBERTA R. G. SNOWDON MAR 14 2014

No.	DATE	REVISION	PROJECT	DRAWN	CHECK	ENG.
1	03/08/14	RE-ISSUED FOR CONSTRUCTION		MA	RGS	RGS
0	10/21/13	ISSUED FOR CONSTRUCTION		MA	RGS	RGS
A	07/26/13	ISSUED FOR APPROVAL		MA	RGS	RGS

SNOWDON CONSULTING INC.

DEVON NEC CORP.

FERRIER CENTRAL PROCESSING FACILITY
LIQUID EXTRACTION PLANT - CARDIUM GAS SEPARATOR
CARDIUM GAS SEPARATOR PACKAGE (002-PK-01-1600)
002-JBE-01-1602 - 120VAC POWER JUNCTION BOX

'D' SIZE SCALE: NTS | DWG. No: JBE-1602 | REV. 1

B18 Code Registration Certificate

2303-8th Street, Nisku Alberta, T9E-7Z3 CANADA

CERTIFICATE OF AUTHORIZATION

U

The named company is authorized by the American Society of Mechanical Engineers (ASME) for the scope of activity shown below in accordance with the applicable rules of the ASME Boiler and Pressure Vessel Code. The use of the certification mark and the authority granted by this Certificate of Authorization are subject to the provisions of the agreement set forth in the application. Any construction stamped with this certification mark shall have been built strictly in accordance with the provisions of the ASME Boiler and Pressure Vessel Code.

COMPANY:

5Blue Process Equipment Inc.
2303 - 8th Street
Nisku, Alberta, T9E 7Z3
Canada

SCOPE:

Manufacture of pressure vessels at the above location only

AUTHORIZED: **December 6, 2013**

EXPIRES: **February 4, 2017**

CERTIFICATE NUMBER: **40,338**

Vice President, Conformity Assessment

Director, Conformity Assessment

The American Society of Mechanical Engineers

B19 Hydrostatic Testing Procedure

2303-8th Street, Nisku Alberta, T9E-7Z3 CANADA

19.0 PRESSURE TESTS

19.0 Purpose

To provide the system to ensure that all pressure tests, are completed in accordance with the Code and job specifications.

19.1 General

Pneumatic testing must be completed in accordance with an approved procedure. Sensitive leak tests must be in accordance with ASME Section V Article 10.

19.2 Quality Inspector Duties

The Quality Inspector is responsible for all pressure tests. His duties include the following:

a) Witnessing all pressure tests and verifying that they are performed in accordance with a hydrotest procedure.

b) Recording completion of the test on the Pressure Vessel Travel Sheet and Hydro Test Report **(Exhibit 23.31)** when it has been satisfactorily completed. All pressure vessels shall have the hydro test witnessed and accepted by the Authorized Inspector.

c) For the recording of multiple gauge readings, for example 1 reading every 15 minutes for 2 hour pressure hold, Supplementary Hydrostatic Test Report **(Exhibit 23.32)** is to be used.

19.3 Hydrostatic Testing

a) All hydrostatic tests performed will be undertaken with maximum regard to personnel safety. All unauthorized personnel will stay clear of the area where the test is being performed.

b) The metal temperature should be at least 30 degrees F above MDMT but need not exceed 120 degrees F for ASME Code, Section VIII, Division 1, pressure vessels. The water and metal temperature shall not be less than the MDMT of the pressure vessel. Air will be vented as the vessel is filled.

c) The pressure will be increased gradually to the hydrostatic test pressure stated on the approved drawings. The test will be held for minimum time allowed by Code, special Customer Specification or long enough for the Quality Inspector and Authorized Inspector to complete the visual inspection, whichever is longer.

d) If required by the Authorized Inspector, the visual inspection will be made at the MAWP of the vessel.

e) Upon completion of the test, the pressure will be gradually released and the vessel will be vented before removing any fittings.

f) Hydrostatic testing of vessels will require a minimum of two calibrated pressure gauges with one mounted directly on the vessel. These pressure gauges should be graduated to approximately twice the test pressure, but in no case less than 1.5 times or more than 4 times the test pressure.

g) Hydrostatic testing of piping components will require a minimum of two calibrated pressure gauges and be held for a minimum of 10 minutes or as dictated by client specifications. Recording device(s) may be employed if required by client specification or by request. Gauges employed shall be of suitable capacities.

h) Combination hydrostatic testing involving vessel(s) and piping components will observe para f) above for the selection of gauges.

19.4 Pneumatic Testing

If a pneumatic test for piping above 1677kJ is required, a pneumatic test procedure will be submitted to the ABSA Design Survey Section for acceptance prior to use. Coincident with the acceptance of a specific pneumatic test procedure, all non-destructive examinations related to pneumatic testing that are required by the Construction Code (UW-50) shall be performed.

See Section 22 Standard Pneumatic Test Procedure for conducting testing.

19.5 Exhibits

23.31 Hydro Test Report
23.32 Supplementary Hydrostatic Test Report

B20 Copy of Quality Program

2303-8th Street, Nisku Alberta, T9E-7Z3 CANADA

See Previously Submitted QC Manual

2303-8th Street, Nisku Alberta, T9E-7Z3 CANADA

B21 Inspection and Test Plan (Incl. Sign-off Record)

2303-8th Street, Nisku Alberta, T9E-7Z3 CANADA

5Blue Process Equipment Inc.

Pressure Vessel Travel Sheet

Item #	Inspection Required	Comments	QC Point Type	Quality Inspector		AI Point Type	Authorized Inspector		Client Point Type	Customer's Inspector	
			R/I/H	Sign	Date	R/I/H	Sign	Date	R/I/H	Sign	Date
1	Calculations in File		R	JOB	19 AUG	R		OCT 17 2013	R		
2	Release of Approved Drawings		R	JOB	19 AUG	R		09-04-13	R		
3	Heat Numbers Recorded		I	JOB	4 SEPT	R		09-04-13	R		
4	MTR's Checked		R	JOB	4 SEPT	R		09-04-13	R		
5	WPS(s) Checked		R	JOB	19 AUG				R		
6	Welder(s) Qualified		R	JOB	19 AUG				R	DD	Sept 10/13
7	Material Thickness Verified		I	JOB	4 SEPT						
8	Shell(s) and Head(s) Fit Up Inspection		I	JOB	4 SEPT			09-04-13	I	DD	Sept 10/13
9	Nozzle & Fitting Fit Up Inspection		I	JOB	4 SEPT			09-04-13	I	DD	Sept 10/13
10	Nozzle & Flange Rating Verified		I	JOB	4 SEPT				I	DD	Sept 10/13
11	Nozzle Orientation		I	JOB	4 SEPT				I	DD	Sept 10/13
12	Impact Test		R	JOB	10 SEPT	R		SEP 10 2013			
13	Internals Checked	top head to vane pack. AWAIT JOB	I	JOB	4 SEPT				I	DD	Sept 10/13
14	Internal Coil Hydro Test Gauge #'s		N/A								

Job Number: SB1108-20
Drawing No.: SB1108-02-DR-20-001
Customer: DEVON
AI Review: JUN 13 2013

Date: 12-JUN-13
Revision No: 0
Vessel Type: GAS SEPARATOR (002-V-01-1610)
Travel Sheet Initiation: ANDREW NGO

Legend: **R**-Review; **I**-Inspect; **H**-Hold

5Blue Process Equipment Inc.

Pressure Vessel Travel Sheet

Item #	Inspection Required	Comments	QC Point Type	Quality Inspector		AI Point Type	Authorized Inspector		Client Point Type	Customer's Inspector	
15	Internal is Clean		I	JDB	4sept						
16	Final Internal Inspection	INT OF TOP HD AUG 19/13	H	JDB	sept 4	H	[signature]	09-04-13	H	DD	Sept 10/13
17	Weld Size Verified		I	JDB	4sept	I	[signature]	09-04-13	I	DD	Sept 10/13
18	Welder ID stamping Verified		I	JDB	4sept	I	[signature]	09-04-13	I	DD	Sept 10/13
19	External Inspection before PWHT		N/A								
20	Radiography complete		R	JDB	4sept	R	[signature]	09-04-13	R	DD	Sept 10/13
21	Other NDE Complete		R	JDB	12sept				R		
22	PWHT chart reviewed		N/A								
23	Heat Number Mapping Verification		R	JDB	4sept						
24	Final External Inspection		I	JDB	4sept	H	[signature]	09-04-13	H	DD	Sept 10/13
25	Hydro Test – Gauge#'s: 5B-B4-5B-BG-3K	@260PSI. vertical position	H	JDB	10sept	H	[signature]	SEPT 10/13	H	DD	Sept 10/13
26	Repad(s) Air leak Tested		N/A								
27	CRN Drawing		R	JDB	16 oct	R	[signature]	OCT 17 2013	R		
28	Name Plate Review		R	JDB	16 oct	R	[signature]	OCT 17 2013	R		
29	Manufacturers Data Report Completed and Reviewed		R	JDB	17 oct	R	[signature]	OCT 17 2013	R		
30	NCR(s) Reviewed and Closed	5B-1107-001 (material)	H	JDB	16 oct						
31	Name Plate Installation		H	JDB	16 oct				H		

Legend: **R**-Review; **I**-Inspect; **H**-Hold

Job # 5B1108-20

5Blue
Process Equipment Inc.

Pressure Vessel Travel Sheet: Unit # 5B1108-20 (pg3)

Material Thickness Verification and Identification				Weld ID/Welder Symbols/Fit-Up					
Description	Thick	Material Spec. # & Grade	Heat & Slab # or ID #	Weld ID	Sym bol	Fit Up	Weld ID	Sym bol	Fit Up
Shell # 1	0.625"	SA-516 70N	S99147-3-1 G8266-270020510	LS1	U/X	U	CS3	U/A	U
Shell # 2	0.625"	SA-516 70N	S99147-4-1 G8271-270020415	LS1	U/X	U	-	-	-
Top Head # 1	0.625"	SA-516 70N	H99147-1 G8271-270020415	CS1	U	U	-	-	-
Bottom Head # 2	0.625"	SA-516 70N	H99147-1 G8266-270020501	CS2	U/A	U	-	-	-
Skirt	0.375"	SA-516 70N	S99147-7 G1950-8747202361	-	U/A	U	-	-	-
Skirt Ring	1.000"	SA-516 70N	M63810-FA29782202	-	U	U			

Attachments And / Or Nozzle Material Thickness Verification And Identification						Welder Symbols/Fit-Up			
Mark	Mat ID	Neck	Fitting	Flange	Repad or Attach	Cat B	Cat C	Cat D	Pad OD
N1	Spec. - Grad		SA-350 LF2 CL1					U	
	Thk./Rating		CL 150						
	Heat # or ID		D598BN						
N2	Spec. - Grad		SA-350 LF2 CL1					U	
	Thk./Rating		CL 150						
	Heat # or ID		C965BN						
N3	Spec. - Grad	SA-333GR6		SA-350 LF2 CL1				U	
	Thk./Rating	Sch.160		CL 150					
	Heat # or ID	111603075		4625140					
N4	Spec. - Grad	SA-333GR6		SA-350 LF2 CL1				U	
	Thk./Rating	Sch.160		CL 150					
	Heat # or ID	600324		12/33132					

N5	Spec. - Grad		SA-350 LF2 CL1					U	
	Thk./Rating		CL 150						
	Heat # or ID		C907BN						
N6A/B	Spec. - Grad		SA-350 LF2 CL1					U	
	Thk./Rating		CL 300						
	Heat # or ID		C949BN						
N7A/B	Spec. - Grad		SA-350 LF2 CL1					U	
	Thk./Rating		CL 300						
	Heat # or ID		C949BN						
N8	Spec. - Grad		SA-350 LF2 CL1					U	
	Thk./Rating		CL 300						
	Heat # or ID		C949BN						
N9	Spec. - Grad		SA-350 LF2 CL1					U	
	Thk./Rating		CL 300						
	Heat # or ID		C949BN						
N10	Spec. - Grad		SA-350 LF2 CL1					U	
	Thk./Rating		CL 300						
	Heat # or ID		C949BN						
N11	Spec. - Grad		SA-350 LF2 CL1					U	
	Thk./Rating		CL 300						
	Heat # or ID		C949BN						
N12 A/B	Spec. - Grad		SA-350 LF2 CL1					U	
	Thk./Rating		CL150						
	Heat # or ID		A)C949BN B)C910BN						
N13	Spec. - Grad		SA-350 LF2 CL1					U	
	Thk./Rating		CL 300						
	Heat # or ID		C949BN						
M1	Spec. - Grad		SA-350LF2CL1					U	
	Thk./Rating		CL 150						
	Heat # or ID		C603BN						

INSPECTION AND TEST PLAN

5Blue Process Equipment Inc.

Project: Ferrier Central Processing Facility
Customer: Devon Canada/Worley Parsons
Reference: 00-ME-REQ-0022
Document #: 1
P.O. #: 4100001262
Issue Status: IFA

Job No.: 5B1108-02 (Cadium Gas Separator)
Rev: A
Approved By:

Legend
H - Mandatory Hold Point
I - Inspection
W - Witness (Customer)
M - Monitor
R - Review (Documentation)

QC- Quality Inspector
Eng - Engineering
Prod - Production
S/H - Shipping/Receiving
AI- Authorized Inspector

ITEM	ACTIVITY	ACCEPTANCE CRITERIA	VERIFYING DOCUMENT	5BLUE			CUSTOMER/TPI			OTHER		
				STATUS	INSPECTOR	DATE	STATUS	INSPECTOR	DATE	STATUS	INSPECTOR	DATE
1	**DOCUMENTATION**											
1.1	Design/Drawing/Calculation Approvals	ASME Sect VIII, B31.3/Spec.	Drawings/Calculations	H-Eng			R					
1.2	Inspection & Test Plan	Customer approval	I.T.P.	H-Eng			H	DD	Sept 10/13			
1.3	Welding Procedures	ASME Sect VIII, IX, B31.3/Spec.	WPS/PQR	R-QC			H	DD	Sept 10/13			
1.4	Welder Qualifications	ASME Sect. IX	Welder Files	R-QC			R	DD	Sept 10/13			
2	**ENGINEERING**											
2.1	Drawing/E&IL Approvals	ASME Sect.VIII, B31.3/Spec./P.O.	Drawings/E&IL	H-Eng								
2.2	Design Review	Customer approval	Meeting minutes	H-Eng								
3	**MATERIAL CONTROL**											
3.1	Major equipment receiving	P.O.	P.O./Packing reports	H-S/H			R/I	DD	Sept 10/13			
3.2	Vessel material receiving	P.O./ASME Sect II/Spec.	P.O./Packing reports	H-QC			R	DD	Sept 10/13			
3.3	Piping component receiving	P.O./ASME B31.3/Spec.	P.O./Packing reports	H-S/H			R	DD	Sept 10/13			
3.4	Material identification	ASME/Specification/Procedure	Material reports	H-S/H,QC			R	DD	Sept 10/13			
3.5	Material Certificates	ASME/Specification/Procedure	Material reports	H-S/H,QC			R	DD	March 27/14			
4	**STRUCTURAL SKID FABRICATION**											
4.1	Pre-Inspection Meeting	Agreed upon by parties	Travel sheet	H-Prod			H	DD	Sept 10/13			
4.2	Layout/fit-up prior to welding	Dwg.	Travel sheet	H-Prod			I	DD	Sept 10/13			
4.3	Welding visual inspection	Dwg. /CWB	Travel sheet	H-Prod,QC			I	DD	Sept 10/13			
4.4	Dimension check	Dwg. /CWB	Travel sheet	H-Prod,QC			I	DD	Sept 10/13			
5	**BUILDING FABRICATION**											
5.1	Internal visual inspection	Dwg.	Travel sheet	H-Prod,QC			I					
5.2	External visual inspection	Dwg.	Travel sheet	H-Prod,QC			I	DD	March 27/14			
5.3	Verify Vapour Barrier	Dwg.	Travel sheet	H-Prod,QC			H/I	DD	March 27/14			
6	**VERTICAL SEPERATOR**											
6.1	Internal visual inspection	Dwg./ASME	Travel sheet	H-Prod			H/I	DD	March 27/14			
6.2	External visual inspection	Dwg./ASME	Travel sheet	H-Prod			H/I	DD	March 27/14			
6.3	Dimension Check	DWG	Travel Sheet	H-QC			I	DD	March 27/14			
6.4	NDE	Dwg./ASME	Travel sheet/NDE reports	H-QC			R	DD	March 27/14			
6.5	Pressure test	ASME Sect VIII	Travel sheet/Test report	H-QC			H/W	DD	Sept 10/13			
6.6	Blast Profiling	Customer Spec.	Painter ITP	H-QC			H/I	DD	Sept 10/13			
6.7	Code Documentation	ABSA/BCSA	Data report	H-QC			R					
7	**PIPING FABRICATION**											
7.1	Material preparation	Spool dwg./ASME B31.3	Q.C. drawings	R-QC			I	DD	Sept 10/13			
7.2	Fit-up	ASME B31.1	Q.C. drawings	R-QC			I	DD	Sept 10/13			
7.3	Welding visual inspection	Spool dwg./ASME B31.3	Q.C. drawings	H-Prod			I	DD	Sept 10/13			

INSPECTION AND TEST PLAN

5Blue Process Equipment Inc.

Job No.: 5B1108-02 (Cadium Gas Separator)
Rev: A
Approved By:

Project: Ferrier Central Processing Facility
Customer: Devon Canada/Worley Parsons
Reference: 00-ME-REQ-0022
Document #: 1
P.O. #: 4100001262
Issue Status: IFA

Legend
H - Mandatory Hold Point
I - Inspection
W - Witness (Customer)
M - Monitor
R - Review (Documentation)

QC- Quality Inspector
Eng - Engineering
Prod - Production
S/H - Shipping/Receiving
AI- Authorized Inspector

ITEM	ACTIVITY	ACCEPTANCE CRITERIA	VERIFYING DOCUMENT	5BLUE			CUSTOMER/TPI			OTHER		
				STATUS	INSPECTOR	DATE	STATUS	INSPECTOR	DATE	STATUS	INSPECTOR	DATE
7.4	Dimensional check	Spool dwg.	Q.C. drawings	H-Prod			I					
7.5	NDE	Spool dwg./ASME B31.3	Q.C. drawing/NDE report	H-QC			R					
7.6	Pressure test	Spool dwg./ASME B31.3	Q.C. drawings	H-QC			H/W	DD	Sept 10/14			
7.7	Code Documentation (MDR)	ASME B31.3	Data report	H-QC			R					
8	**UNIT ASSEMBLY**											
8.1	Major equipment mounted	Dwg.	Travel sheet	H-Prod			I	DD	Sept 10/14			
8.2	Piping assembly	Dwg./ASME B31.3	Travel sheet	H-Prod			I	DD				
8.3	Instrument assembly and tubing	P&ID, E&IL/ASME B31.3	Travel sheet	H-Prod			I		Apr 30/14			
8.4	Electrical installation	P.O./Code/Specification	Subcontractor	M-QC			I		MAR 21/14			
8.5	Electrical Function Test	Procedure/Specification	Subcontractor	H-QC			H/W		Apr 30/14			
8.6	Skid edge termination dimensional check	Dwg.	Travel sheet	H-Prod,Eng			I					
8.7	P&ID check	Dwg/Specification	Travel sheet	H-Eng			I		" "			
8.8	Function test	Procedure/Specification	Travel sheet	H-Eng,QC			H/W		" "			
8.9	Leak test	Procedure/Specification	Travel sheet	H-QC			H/W		" "			
8.10	Paint inspection	Procedure/Specification	Travel sheet	H-QC			R					
8.11	Skid Insulation Inspection	Procedure/Specification	Travel sheet	H-QC			I	DD	May 6/14			
8.12	Final inspection/ Inspection Release	Procedure/Specification	Travel sheet	H-Prod,QC			H	DD	May 6/14			
8.13	Shipping Release	Procedure/Specification	Travel sheet	H-Prod,QC			H					
8.14	Packaging for transport	Procedure/Specification	Travel sheet	H-Prod,QC			W					
8.15	Unit Quality document package	Procedure/Specification	VDR	H-QC			R					

B30 Weld Procedure Qualification Record (WPQR)

2303-8th Street, Nisku Alberta, T9E-7Z3 CANADA

U

Welder Qualification

This card is valid only while employed by a CWB certified company

Transferable Welder

Name: **DAYTON F. MATTHEWS** Exp. Date: **Dec 13, 2015**

Employer: **5Blue Process Equipment Inc., Nisku, AB**

Thickness Range: **3mm & above** Material: **Carbon Steel**

Process: **SMAW**

Mode: **MANUAL** Standard: **CSA W47.1**

Classification: **S**

Electrode: **F4**

Class: **FLAT/HORIZONTAL/VERTICAL UP/OVERHEAD**

See Reverse for Conditions

GRB ENTERPRISES LTD. 9712 - 54 Ave. EDMONTON ALBERTA T6E 0A9 2.5" x 0.625" wt

Exhibit 9.3A / AB-76 A Modified *WELDER QUALIFICATION RECORD (WQR)*

Welder's Name: Dayton Matthews ABSA File No.: W- 23078 Stamp No.:

Identification of WPS followed by welder during welding of test coupon: 5B-102AW-PWHT W.P. Reg. # WP- 3146.2(r0)

Base material(s) welded: A 513 1026 Thickness: 0.625" ☒ Test Coupon ☐ Prod. Weld

Testing Variables and Qualification Limits

Welding Variables (QW-350)	Actual Values		Range Qualified	
Welding Process(es) Used:	SMAW	SMAW	SMAW	SMAW
Type of Welding (manual, semi-automatic) Used:	Manual	Manual	Manual	Manual
Base Metal P Number to P Number:	P1	P1	P1through P15F	P1through P15F
Plate ☐ Pipe ☒ enter diameter:	NPS 2.5	NPS 2.5	1" OD Min.	1" OD Min.
Backing (metal, weld metal, double weld etc.):	None / Weld metal	Weld Metal	Without / With	With
Filler Metal or Electrode Specification(s) SFA#:	5.1	5.1		
Filler Metal or Electrode Classification(s):	E6010	E7018-1		
Filler Metal or Electrode F - number(s):	F3	F4	F3	F4
Filler Type (solid metal, or flux cored/powder) GTAW or PAW:	N/A	N/A	N/A	N/A
Consumable Insert for GTAW or PAW:	N/A	N/A	N/A	N/A
Deposit Thickness for each process, electrode type, etc. (in.):	0.125"	0.500"	0.250"	Max. to weld
Process/Electrode 1: 3 layers minimum Yes ☐ No ☒			Process/Electrode 2: 3 layers minimum Yes ☒ No ☐	
Welding position (2G, 5G, 6G, 3F, etc.):	6G	6G	All	All
Progression (Uphill or Downhill):	Uphill	Uphill	Uphill	Uphill
Inert Gas backing for GTAW, PAW, GMAW:	N/A	N/A	N/A	N/A
Transfer Mode (spray/globular or pulse to short circuit):	N/A	N/A	N/A	N/A
GTAW Current Type/ Polarity (AC, DCEP, DCEN):	DCEP	DCEP	DCEP	DCEP

Results

Visual Examination of Fit-Up Root Gap: 3/32" Tack Welds: Bridge Length: 0.5" Number: 3

Root Pass (Describe Discontinuity if Unacceptable): OK

Complete Weld (Describe Defects if Unacceptable): OK

Bend Test

☐ Transverse Root and Face QW-462.3a ☐ Longitudinal Root and Face QW-462.3b

☐ Pipe Bend Specimen, corrosion-resistant overlay QW-462.5c ☐ Plate Bend Specimen, corrosion-resistant overlay QW-462.5d

☒ Side Bend QW-462.2 ☐ Macro Test for Fusion QW-462.5b ☐ Macro Test for Fusion QW-462.5e

Bend Type	Result	Bend Type	Result	Bend Type	Result	Bend Type	Result
# 1 Side	Pass	# 3 Side	Pass				
# 2 Side	Pass	# 4 Side	Pass				

For alternative qualification of groove welds by radiography to QW-191

Radiographic Results: N/A

Fillet Weld-Fracture Test (QW-180): N/A Length and Percent of Defects: N/A

Macro Examination (QW-184): N/A Fillet Legs Size (in.): N/A X N/A Concavity/Convexity (in.): N/A

Other Tests: N/A

Record Information

Film or Specimens Evaluated by: Bruce Cormier Company: GRB Enterprises Ltd.\

Welding Test Conducted by: Bruce Cormier

Mechanical Tests Conducted by: GRB Enterprises Ltd. Laboratory Test no.: N/A

Welding Supervised by: 5Blue Process Representative: Joelle Dery-Brochu

We certify that the statements in this record are correct and that the test coupons were prepared, welded and tested in accordance with the requirements of Section IX of the ASME Code.

Accredited Organization: GRB ENTERPRISES LTD. AOQP No: 7107(C) Expiry Date: May 21 2015

Certified by: Bruce Cormier 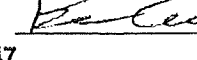 W.E.File: E-00252 Date: September 05, 2013

PQ Card No. (When Issued): 19547 Performance Test Reference No.: 13-09-05-11

Test Coupon ID No.: Welder Name Date Coupon is Retained To: N/A

GRB ENTERPRISES LTD. 9712 - 54 Ave. EDMONTON ALBERTA T6E 0A9 2" sch 80

Exhibit 9.3A / AB-76 A Modified *WELDER QUALIFICATION RECORD (WQR)*

Welder's Name: Dayton Matthews ABSA File No.: W- 23078 Stamp No.:

Identification of WPS followed by welder during welding of test coupon: 5B103 AW/PWHT W.P. Reg. # WP- 3146.2 (r0)

Base material(s) welded: SA 106 GR B Thickness: 0.218" ☒ Test Coupon ☐ Prod. Weld

Testing Variables and Qualification Limits

Welding Variables (QW-350)	Actual Values		Range Qualified	
Welding Process(es) Used:	GMAW	SMAW	GMAW	SMAW
Type of Welding (manual, semi-automatic) Used:	Semi-Automatic	Manual	Semi-Automatic	Manual
Base Metal P Number to P Number:	P1	P1	P1through P15F	P1through P15F
Plate ☐ Pipe ☒ enter diameter:	NPS 2	NPS 2	1" OD Min.	1" OD Min.
Backing (metal, weld metal, double weld etc.):	None / Weld	Weld Metal	Without / With	With
Filler Metal or Electrode Specification(s) SFA#:	5.18	5.1		
Filler Metal or Electrode Classification(s):	ER70S-6	E7018-1		
Filler Metal or Electrode F - number(s):	F6	F4	F6	F4
Filler Type (solid metal, or flux cored/powder) GTAW or PAW:	Solid	N/A	Solid	N/A
Consumable Insert for GTAW or PAW:	N/A	N/A	N/A	N/A
Deposit Thickness for each process, electrode type, etc. (in.):	0.125"	0.093"	0.1375"	0.186"
Process/Electrode 1: 3 layers minimum Yes ☐ No ☒	Process/Electrode 2: 3 layers minimum Yes ☐ No ☒			
Welding position (2G, 5G, 6G, 3F, etc.):	1G *SP	1G	SP/Flat	Flat
Progression (Uphill or Downhill):	N/A	N/A	N/A	N/A
Inert Gas backing for GTAW, PAW, GMAW:	N/A	N/A	N/A	N/A
Transfer Mode (spray/globular or pulse to short circuit):	Short Circuit	N/A	Short Circuit	N/A
GTAW Current Type/ Polarity (AC, DCEP, DCEN):	DCEP	DCEP	DCEP	DCEP

Results

Visual Examination of Fit-Up Root Gap: 1/8" Tack Welds: Bridge Length: 0.5" Number: 3

Root Pass (Describe Discontinuity if Unacceptable): OK

Complete Weld (Describe Defects if Unacceptable): OK

Bend Test

☒ Transverse Root and Face QW-462.3a ☐ Longitudinal Root and Face QW-462.3b

☐ Pipe Bend Specimen, corrosion-resistant overlay QW-462.5c ☐ Plate Bend Specimen, corrosion-resistant overlay QW-462.5d

☐ Side Bend QW-462.2 ☐ Macro Test for Fusion QW-462.5b ☐ Macro Test for Fusion QW-462.5e

Bend Type	Result	Bend Type	Result	Bend Type	Result	Bend Type	Result
# 1 Root	Pass						
# 2 Face	Pass						

For alternative qualification of groove welds by radiography to QW-191

Radiographic Results: N/A

Fillet Weld-Fracture Test (QW-180): N/A Length and Percent of Defects: N/A

Macro Examination (QW-184): N/A Fillet Legs Size (in.): N/A X N/A Concavity/Convexity (in.): N/A

Other Tests: * Root deposit at 60' from Top Dead Center

Record Information

Film or Specimens Evaluated by: G.R.Bellehumeur Company: GRB Enterprises Ltd.

Welding Test Conducted by: G.R.Bellehumeur

Mechanical Tests Conducted by: GRB Enterprises Ltd. Laboratory Test no.: N/A

Welding Supervised by: 5Blue Process Representative: Joelle Dery-Brochu

We certify that the statements in this record are correct and that the test coupons were prepared, welded and tested in accordance with the requirements of Section IX of the ASME Code.

Accredited Organization: GRB ENTERPRISES LTD. AOQP No: 7107(C) Expiry Date: **May 21 2015**

Certified by: **Bruce Cormier** W.E.File: E-00252 Date: September 05, 2013

PQ Card No. (When Issued): 19548 Performance Test Reference No.: 13-09-05-12

Test Coupon ID No.: Welder Name Date Coupon is Retained To: N/A

GRB Enterprises Ltd
Edmonton Alberta

AOQP 7107(C)

WELDER PERFORMANCE QUALIFICATION CARD

DAYTON
Name

MATTHEWS W- 23078
Name ABSA File Number

This card is issued pursuant to the Safety Codes Act and the Pressure Welders Regulation. The performance qualification is in accordance with Section IX of the ASME BPV Code and subject to the limitations on the reverse side.

SEPT 5, 2013
Date of Test

Welder Signature

BRUCE CORMIER 19548
Welding Examiner (Print/Type) GRB Card No.

GRB Enterprises Ltd
Edmonton Alberta

AOQP 7107(C)

WELDER PERFORMANCE QUALIFICATION CARD

DAYTON
Name

MATTHEWS W- 23078
Name ABSA File Number

This card is issued pursuant to the Safety Codes Act and the Pressure Welders Regulation. The performance qualification is in accordance with Section IX of the ASME BPV Code and subject to the limitations on the reverse side.

SEPT 5, 2013
Date of Test

Welder Signature

BRUCE CORMIER 19547
Welding Examiner (Print/Type) GRB Card No.

Performance Qualification GRB Card No. 19548

Process(es)	GMAW	SMAW	P1 THROUGH
Filler Metal (F.No)	F6	F4	Materials (P.No.) P1SF
Max Deposited Weld Metal	0.1375"	0.186"	Min. Outside Pipe Diameter 1" OD
Backing	WITHOUT WITH	WITH	Position(s) Qualified F6: 5G/F; F4: FLAT
Progression	N/A	N/A	Backing Gas NONE
			#E00 252 Examiner File No.

SEPT 5, 2015
P.Q. Expiry Date

Welding Examiner Signature

Performance Qualification GRB Card No. 19547

Process(es)	SMAW		P1 THROUGH
Filler Metal (F.No)	F3	F4	Materials (P.No.) P1SF
Max Deposited Weld Metal	0.250"	MAX. TO WELD	Min. Outside Pipe Diameter 1" OD
Backing	WITHOUT WITH	WITH	Position(s) Qualified ALL
Progression	UPHILL		Backing Gas NONE
			#E00 252 Examiner File No.

SEPT 5, 2015
P.Q. Expiry Date

Welding Examiner Signature

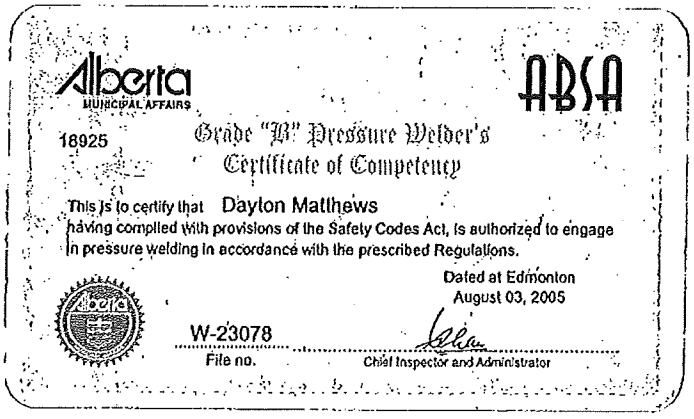

Alberta
MUNICIPAL AFFAIRS

ABSA

18925

Grade "B" Pressure Welder's
Certificate of Competency

This is to certify that Dayton Matthews
having complied with provisions of the Safety Codes Act, is authorized to engage in pressure welding in accordance with the prescribed Regulations.

Dated at Edmonton
August 03, 2005

W-23078
File no.

Chief Inspector and Administrator

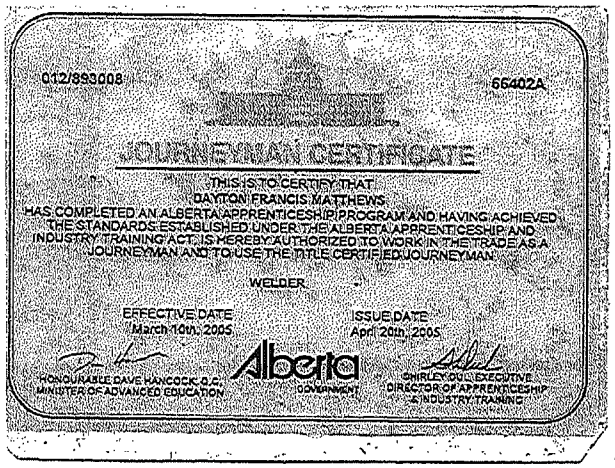

012/893008 66402A

JOURNEYMAN CERTIFICATE

THIS IS TO CERTIFY THAT
DAYTON FRANCIS MATTHEWS
HAS COMPLETED AN ALBERTA APPRENTICESHIP PROGRAM AND, HAVING ACHIEVED THE STANDARDS ESTABLISHED UNDER THE ALBERTA APPRENTICESHIP AND INDUSTRY TRAINING ACT, IS HEREBY AUTHORIZED TO WORK IN THE TRADE AS A JOURNEYMAN AND TO USE THE TITLE CERTIFIED JOURNEYMAN.

WELDER

EFFECTIVE DATE
March 10th, 2005

ISSUE DATE
April 20th, 2005

HONOURABLE DAVE HANCOCK, Q.C.
MINISTER OF ADVANCED EDUCATION

Alberta
GOVERNMENT

SHIRLEY DULL, EXECUTIVE
DIRECTOR OF APPRENTICESHIP
& INDUSTRY TRAINING

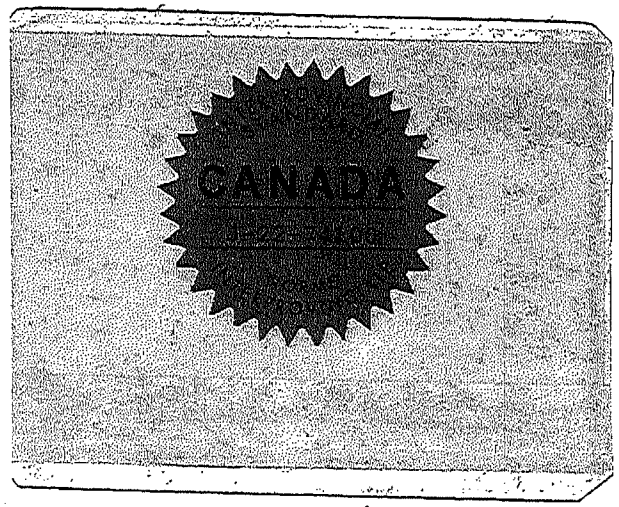

Welder Qualification

This card is valid only while employed by a CWB certified company

Transferable Welder

Name: **DAYTON F. MATTHEWS** Exp. Date: **Dec 13, 2015**

Employer: **5Blue Process Equipment Inc., Nisku, AB**

Thickness Range: **3mm & above**

Material: **Carbon Steel**

Process: **SMAW**

Mode: **MANUAL**

Standard: **CSA W47.1**

Classification: **S**

Electrode: **F4**

Class: **FLAT/HORIZONTAL/VERTICAL UP/OVERHEAD**

See Reverse for Conditions

X

GRB ENTERPRISES LTD. 9712 - 54 Ave. EDMONTON ALBERTA T6E 0A9

AB-76B modified Exhibit 9.3 B ***WELDER OPERATOR QUALIFICATION RECORD (WOQR)***

Welder's Operator's Name: **Shane Sterling** ABSA File: **MW-69681** Stamp No.:

Identification of WPS followed by welder during welding of test coupon: **5B-110 (rev0)** W.P. Reg. # WP- **3146.2**

Base material(s) welded: **SA516 GR 70** Thickness: **0.500"** ☒ Test Coupon ☐ Prod. Weld

Base Metal P Number: **P1** To P Number: **P1** Welding Position (2G, 6G, 3F, etc.): **1G**

☒ Plate ☐ Pipe (enter diameter if pipe or tube: **N/A**

Filler Metal (SFA) Specification: **5.9** Filler Metal or Electrode Classification: **ER316L (F-6)**

Testing Variables and Qualification Limits When Using Automatic Welding Equipment

Welding Variables (QW-361.1)	**Actual Values**	**Range Qualified**
Welding Process(es) Used:	N/A	N/A
Type of Welding (Automatic):	N/A	N/A
Addition or Deletion of Filler Metal (EBW or LBW):	N/A	N/A
Type of Laser for LBW (CO_2 to YAG, etc.):	N/A	N/A
Continous Drive or Interia Welding (FW):	N/A	N/A
Vacuum or Out of Vacuum (EBW):	N/A	N/A

Testing Variables and Qualification Limits When Using Machine Welding Equipment

Welding Variables (QW-361.2)	**Actual Values**	**Range Qualified**
Welding Process(es) Used:	SAW	SAW (P-1 through P-8)
Type of Welding (Machine):	Machine	Machine
Direct or Remote Visual Control:	Direct	Direct
Automatic Arc Voltage Control (GTAW):	N/A	N/A
Consumable Inserts (GTAW or PAW):	N/A	N/A
Automatic Joint Tracking:	N/A	Manual
Backing (metal, weld meat, backwelded, etc.):	Metal/Weld Metal	With
Welding Position (2G, 6G, 3F, etc.):	1G	Flat (2.875" mm OD and over)
Single or Multiple Passes per Side:	Multiple (0.500 deposit *)	Single/Multiple (Max. to be welded)

Results

Visual Examination of Root Pass (Describe Discontinuity if Unacceptable): **N/A Metal Backing Bar**

Completed Weld (Describe Defects if Unacceptable): **OK**

Bend Test: ☐ Transverse Root and Face QW-462.3(a) ☐ Longitudinal Root and Face QW-462.3(b) ☒ Side QW-462.2

☐ Pipe Bend Specimen, corrosion-resistant overlay QW-462.5(c) ☐ Plate Bend Specimen, corrosion-resistant overlay QW-462.5(d)

☐ Macro Test for Fusion QW-462.5(b) ☐ Macro Test for Fusion QW-462.5e

Type	Result	Type	Result	Type	Result	Type	Result
Side # 1	Pass						
Side # 2	Pass						

(For alternative qualification of groove welds by radiography to QW-191)

Radiographic Results: **N/A**

Fillet Weld-Fracture (Describe location, nature and size of any crac k or tearing of specimen): **N/A**

Length and Percent of Defects: **N/A** inches **N/A**

Macro Test Fusion: **N/A**

Appearance-Fillet Size (leg):: **N/A** **X N/A** inch. Convexity: **N/A** inch. or Concavity: **N/A** inch.

Other Tests: ***Actual deposit done in more than three layers as per QW 306**

Record Information

Film or Specimens Evaluated by: **Bruce Cormier** Company: **GRB Enterprises Ltd.**

Welding Test Conducted by: **Bruce Cormier (5 Blue Process Representative: Joelle Dery-Brochu)**

Mechanical Tests Conducted by: **GRB Enterprises Ltd.** Laboratory Test no.: **N/A**

We certify that the statements in this record are correct and that the test coupons were prepared, welded and tested in accordance with the requirements of Section IX of the ASME Code.

Accredited Organization: GRB ENTERPRISES LTD. AOQP No: 7107(C) Expiry Date: **May 21 2015**

Certified by: **Bruce Cormier** W.E.File: **E -00252** Date: **December 17, 2013**

PQ Card No. (When Issued): **20005** Performance Test Reference No.: **13-12-17-07**

Test Coupon ID No.: **Welder name** Date Coupon is Retained To: **N/A**

GRB ENTERPRISES LTD. 9712 - 54 Ave. EDMONTON ALBERTA T6E 0A9

AB-76B modified Exhibit 9.3 B ***WELDER OPERATOR QUALIFICATION RECORD (WOQR)***

Welder's Operator's Name: **Shane Sterling** ABSA File: **MW-69681** Stamp No.:

Identification of WPS followed by welder during welding of test coupon: **5B-106AW (r1)** W.P. Reg. # WP- **3146.2**

Base material(s) welded: **SA516 GR 70** Thickness: **0.500"** ☒ Test Coupon ☐ Prod. Weld

Base Metal P Number: **P1** To P Number: **P1** Welding Position (2G, 6G, 3F, etc.): **1G**

☒ Plate ☐ Pipe (enter diameter if pipe or tube: **N/A**

Filler Metal (SFA) Specification: **5.17** Filler Metal or Electrode Classification: **EM14K (F-6)**

Testing Variables and Qualification Limits When Using Automatic Welding Equipment

Welding Variables (QW-361.1)	**Actual Values**	**Range Qualified**
Welding Process(es) Used:	N/A	N/A
Type of Welding (Automatic):	N/A	N/A
Addition or Deletion of Filler Metal (EBW or LBW):	N/A	N/A
Type of Laser for LBW (CO_2 to YAG, etc.):	N/A	N/A
Continous Drive or Interia Welding (FW):	N/A	N/A
Vacuum or Out of Vacuum (EBW):	N/A	N/A

Testing Variables and Qualification Limits When Using Machine Welding Equipment

Welding Variables (QW-361.2)	**Actual Values**	**Range Qualified**
Welding Process(es) Used:	SAW	SAW (P-1)
Type of Welding (Machine):	Machine	Machine
Direct or Remote Visual Control:	Direct	Direct
Automatic Arc Voltage Control (GTAW):	N/A	N/A
Consumable Inserts (GTAW or PAW):	N/A	N/A
Automatic Joint Tracking:	N/A	Manual
Backing (metal, weld meat, backwelded, etc.):	Metal/Weld Metal	With
Welding Position (2G, 6G, 3F, etc.):	1G	Flat (2.875" mm OD and over)
Single or Multiple Passes per Side:	Multiple (0.500 deposit *)	Single/Multiple (Max. to be welded)

Results

Visual Examination of Root Pass (Describe Discontinuity if Unacceptable): **N/A Metal Backing Bar**

Completed Weld (Describe Defects if Unacceptable): **OK**

Bend Test: ☐ Transverse Root and Face QW-462.3(a) ☐ Longitudinal Root and Face QW-462.3(b) ☒ Side QW-462.2

☐ Pipe Bend Specimen, corrosion-resistant overlay QW-462.5(c) ☐ Plate Bend Specimen, corrosion-resistant overlay QW-462.5(d)

☐ Macro Test for Fusion QW-462.5(b) ☐ Macro Test for Fusion QW-462.5e

Type	Result	Type	Result	Type	Result	Type	Result
Side # 1	Pass						
Side # 2	Pass						

(For alternative qualification of groove welds by radiography to QW-191)

Radiographic Results: **N/A**

Fillet Weld-Fracture (Describe location, nature and size of any crac k or tearing of specimen): **N/A**

Length and Percent of Defects: **N/A** inches **N/A**

Macro Test Fusion: **N/A**

Appearance-Fillet Size (leg):: **N/A** **X N/A** inch. Convexity: **N/A** inch. or Concavity: **N/A** inch.

Other Tests: ***Actual deposit done in more than three layers as per QW 306**

Record Information

Film or Specimens Evaluated by: **Bruce Cormier** Company: **GRB Enterprises Ltd.**

Welding Test Conducted by: **Bruce Cormier (5 Blue Process Representative: Joelle Dery-Brochu)**

Mechanical Tests Conducted by: **GRB Enterprises Ltd.** Laboratory Test no.: **N/A**

We certify that the statements in this record are correct and that the test coupons were prepared, welded and tested in accordance with the requirements of Section IX of the ASME Code.

Accredited Organization: GRB ENTERPRISES LTD. AOQP No: 7107(C) Expiry Date: **May 21 2015**

Certified by: **Bruce Cormier** W.E.File: **E -00252** Date: **December 17, 2013**

PQ Card No. (When Issued): **20006** Performance Test Reference No.: **13-12-17-08**

Test Coupon ID No.: **Welder name** Date Coupon is Retained To: **N/A**

GRB Enterprises Ltd
Edmonton Alberta AOQP 7107(C)

WELDER PERFORMANCE QUALIFICATION CARD

SHANE
Name STERLING NW-69681
Name ABSA File Number

This card is issued pursuant to the Safety Codes Act and the Pressure Welders Regulation. The performance qualification is in accordance with Section IX of the ASME BPV Code and subject to the limitations on the reverse side.

DEC 17, 2013 —
Date of Test Welder Signature

BRUCE CORMIER 20006
Welding Examiner (Print/Type) GRB Card No.

GRB Enterprises Ltd
Edmonton Alberta AOQP 7107(C)

WELDER PERFORMANCE QUALIFICATION CARD

SHANE
Name STERLING NW-69681
Name ABSA File Number

This card is issued pursuant to the Safety Codes Act and the Pressure Welders Regulation. The performance qualification is in accordance with Section IX of the ASME BPV Code and subject to the limitations on the reverse side.

DEC 17, 2013 —
Date of Test Welder Signature

BRUCE CORMIER 20005
Welding Examiner (Print/Type) GRB Card No.

Performance Qualification GRB Card No. 20006

Process(es)	SAW	Materials (P.No.)	P1
Filler Metal (F.No)	F6	Min. Outside Pipe Diameter	2.875"
Max Deposited Weld Metal	MAX. TO WELD	Position(s) Qualified	FLAT
Backing	WITH	Backing Gas	NONE
Progression	N/A	#E00	252

DEC 17, 2015 — Examiner File No.
P.Q. Expiry Date Welding Examiner Signature

Performance Qualification GRB Card No. 20005

Process(es)	SAW	Materials (P.No.)	P1 THROUGH P8
Filler Metal (F.No)	F6	Min. Outside Pipe Diameter	2.875"
Max Deposited Weld Metal	MAX. TO WELD	Position(s) Qualified	FLAT
Backing	WITH	Backing Gas	NONE
Progression	N/A	#E00	252

DEC 17, 2015 — Examiner File No.
P.Q. Expiry Date Welding Examiner Signature

A

Form No. CB-43 (92/02)

№ 8254

Alberta

LABOUR
Boiler and Pressure Vessel Safety

Grade "B" Pressure Welder's Certificate of Competency

This is to Certify that: Robert David Klassen

having complied with provisions of the Boilers and Pressure Vessels Act is hereby granted a Grade "B" Pressure Welder's Certificate of Competency, and is authorized to engage in pressure welding in accordance with the prescribed Regulations.

Dated at Edmonton, this Sixteenth day of March 1992

W- 14037
ABB File No.

Chief Inspector

GRB ENTERPRISES LTD. 9712 - 54 Ave. EDMONTON ALBERTA T6E 0A9 2.5" sch xxh

Exhibit 9.3A / AB-76 A Modified ***WELDER QUALIFICATION RECORD (WQR)***

Welder's Name: **Robert Klassen** ABSA File No.: W- **14037** Stamp No.:

Identification of WPS followed by welder during welding of test coupon: 5B-102AW-PWHT W.P. Reg. # WP- **3146.2(r0)**

Base material(s) welded: **SA 106 GR B** Thickness: **0.552"** ☒ Test Coupon ☐ Prod. Weld

Testing Variables and Qualification Limits

Welding Variables (QW-350)	**Actual Values**		**Range Qualified**	
Welding Process(es) Used:	SMAW	SMAW	SMAW	SMAW
Type of Welding (manual, semi-automatic) Used:	Manual	Manual	Manual	Manual
Base Metal P Number to P Number:	P1	P1	P1	P1
Plate ☐ Pipe ☒ enter diameter:	NPS 2.5	NPS 2.5	1" OD Min.	1" OD Min.
Backing (metal, weld metal, double weld etc.):	None / Weld metal	Weld Metal	Without / With	With
Filler Metal or Electrode Specification(s) SFA#:	5.1	5.1		
Filler Metal or Electrode Classification(s):	E6010	E7018-1		
Filler Metal or Electrode F - number(s):	F3	F4	F3	F4
Filler Type (solid metal, or flux cored/powder) GTAW or PAW:	N/A	N/A	N/A	N/A
Consumable Insert for GTAW or PAW:	N/A	N/A	N/A	N/A
Deposit Thickness for each process, electrode type, etc. (in.):	0.052"	0.500"	0.104"	Max. to weld
Process/Electrode 1: 3 layers minimum Yes ☐ No ☒	Process/Electrode 2: 3 layers minimum Yes ☒ No ☐			
Welding position (2G, 5G, 6G, 3F, etc.):	6G	6G	All	All
Progression (Uphill or Downhill):	Uphill	Uphill	Uphill	Uphill
Inert Gas backing for GTAW, PAW, GMAW:	N/A	N/A	N/A	N/A
Transfer Mode (spray/globular or pulse to short circuit):	N/A	N/A	N/A	N/A
GTAW Current Type/ Polarity (AC, DCEP, DCEN):	DCEP	DCEP	DCEP	DCEP

Results

Visual Examination of Fit-Up Root Gap: **3/32"** Tack Welds: **Bridge** Length: **0.5"** Number: **3**

Root Pass (Describe Discontinuity if Unacceptable): **OK**

Complete Weld (Describe Defects if Unacceptable): **OK**

Bend Test

☐ Transverse Root and Face QW-462.3a ☐ Longitudinal Root and Face QW-462.3b

☐ Pipe Bend Specimen, corrosion-resistant overlay QW-462.5c ☐ Plate Bend Specimen, corrosion-resistant overlay QW-462.5d

☒ Side Bend QW-462.2 ☐ Macro Test for Fusion QW-462.5b ☐ Macro Test for Fusion QW-462.5e

Bend Type	Result	Bend Type	Result	Bend Type	Result	Bend Type	Result
# 1 Side	Pass	# 3 Side	Pass				
# 2 Side	Pass	# 4 Side	Pass				

For alternative qualification of groove welds by radiography to QW-191

Radiographic Results: **N/A**

Fillet Weld-Fracture Test (QW-180): **N/A** Length and Percent of Defects: **N/A**

Macro Examination (QW-184): **N/A** Fillet Legs Size (in.): **N/A** X **N/A** Concavity/Convexity (in.): **N/A**

Other Tests: **N/A**

Record Information

Film or Specimens Evaluated by: **Bruce Cormier** Company: **GRB Enterprises Ltd.**

Welding Test Conducted by: **Bruce Cormier**

Mechanical Tests Conducted by: **GRB Enterprises Ltd.** Laboratory Test no.: **N/A**

Welding Supervised by: **5Blue Process Representative: Andrew Ngo**

We certify that the statements in this record are correct and that the test coupons were prepared, welded and tested in accordance with the requirements of Section IX of the ASME Code.

Accredited Organization: GRB ENTERPRISES LTD. AOQP No: 7107(C) Expiry Date: **May 21 2015**

Certified by: **Bruce Cormier** W.E.File: **E-00252** Date: **November 05, 2012**

PQ Card No. (When Issued): **18391** Performance Test Reference No.: **12-11-05-12**

Test Coupon ID No.: **Welder Name** Date Coupon is Retained To: **N/A**

GRB ENTERPRISES LTD. 9712 - 54 Ave. EDMONTON ALBERTA T6E 0A9 2" sch 80

Exhibit 9.3A / AB-76 A Modified ***WELDER QUALIFICATION RECORD (WQR)***

Welder's Name: **Robert Klassen** ABSA File No.: W- **14037** Stamp No.:

Identification of WPS followed by welder during welding of test coupon: **5B103 AW/PWHT** W.P. Reg. # WP- **3146.2 (r0)**

Base material(s) welded: **SA 106 GR B** Thickness: **0.218"** ☒ Test Coupon ☐ Prod. Weld

Testing Variables and Qualification Limits

Welding Variables (QW-350)	**Actual Values**		**Range Qualified**	
Welding Process(es) Used:	GMAW	SMAW	GMAW	SMAW
Type of Welding (manual, semi-automatic) Used:	Semi-Automatic	Manual	Semi-Automatic	Manual
Base Metal P Number to P Number:	P1	P1	P1	P1
Plate ☐ Pipe ☒ enter diameter:	NPS 2	NPS 2	1" OD Min.	1" OD Min.
Backing (metal, weld metal, double weld etc.):	None / Weld	Weld Metal	Without / With	With
Filler Metal or Electrode Specification(s) SFA#:	5.18	5.1		
Filler Metal or Electrode Classification(s):	ER70S-6	E7018-1		
Filler Metal or Electrode F - number(s):	F6	F4	F6	F4
Filler Type (solid metal, or flux cored/powder) GTAW or PAW:	Solid	N/A	Solid	N/A
Consumable Insert for GTAW or PAW:	N/A	N/A	N/A	N/A
Deposit Thickness for each process, electrode type, etc. (in.):	0.125"	0.093"	0.1375"	0.186"
Process/Electrode 1: 3 layers minimum Yes ☐ No ☒	Process/Electrode 2: 3 layers minimum Yes ☐ No ☒			
Welding position (2G, 5G, 6G, 3F, etc.):	6G	6G	All	All
Progression (Uphill or Downhill):	Downhill	Uphill	Downhill	Uphill
Inert Gas backing for GTAW, PAW, GMAW:	N/A	N/A	N/A	N/A
Transfer Mode (spray/globular or pulse to short circuit):	Short Circuit	N/A	Short Circuit	N/A
GTAW Current Type/ Polarity (AC, DCEP, DCEN):	DCEP	DCEP	DCEP	DCEP

Results

Visual Examination of Fit-Up Root Gap: **1/8"** Tack Welds: **Bridge** Length: **0.5"** Number: **3**

Root Pass (Describe Discontinuity if Unacceptable): **OK**

Complete Weld (Describe Defects if Unacceptable): **OK**

Bend Test

☒ Transverse Root and Face QW-462.3a ☐ Longitudinal Root and Face QW-462.3b

☐ Pipe Bend Specimen, corrosion-resistant overlay QW-462.5c ☐ Plate Bend Specimen, corrosion-resistant overlay QW-462.5d

☐ Side Bend QW-462.2 ☐ Macro Test for Fusion QW-462.5b ☐ Macro Test for Fusion QW-462.5e

Bend Type	Result	Bend Type	Result	Bend Type	Result	Bend Type	Result
# 1 Root	Pass	# 3 Root	Pass				
# 2 Face	Pass	# 4 Face	Pass				

For alternative qualification of groove welds by radiography to QW-191

Radiographic Results: **N/A**

Fillet Weld-Fracture Test (QW-180): **N/A** Length and Percent of Defects: **N/A**

Macro Examination (QW-184): **N/A** Fillet Legs Size (in.): **N/A** X **N/A** Concavity/Convexity (in.): **N/A**

Other Tests: **N/A**

Record Information

Film or Specimens Evaluated by: **Bruce Cormier** Company: **GRB Enterprises Ltd.**

Welding Test Conducted by: **Bruce Cormier**

Mechanical Tests Conducted by: **GRB Enterprises Ltd.** Laboratory Test no.: **N/A**

Welding Supervised by: **5Blue Process Representative: Andrew Ngo**

We certify that the statements in this record are correct and that the test coupons were prepared, welded and tested in accordance with the requirements of Section IX of the ASME Code.

Accredited Organization: GRB ENTERPRISES LTD. AOQP No: 7107(C) Expiry Date: **May 21 2015**

Certified by: **Bruce Cormier** W.E.File: **E-00252** Date: **November 05, 2012**

PQ Card No. (When Issued): **18392** Performance Test Reference No.: **12-11-05-13**

Test Coupon ID No.: **Welder Name** Date Coupon is Retained To: **N/A**

GRB ENTERPRISES LTD. 9712 - 54 Ave. EDMONTON ALBERTA T6E 0A9 1/2" plate

Exhibit 9.3A / AB-76 A Modified ***WELDER QUALIFICATION RECORD (WQR)***

Welder's Name: **Robert Klassen** ABSA File No.: W- **14037** Stamp No.:

Identification of WPS followed by welder during welding of test coupon: **5B-106AW(r 0)** W.P. Reg. # WP- **3146.2**

Base material(s) welded: **SA 36** Thickness: **0.500"** ☒ Test Coupon ☐ Prod. Weld

Testing Variables and Qualification Limits

Welding Variables (QW-350)	Actual Values		Range Qualified	
Welding Process(es) Used:		SAW		SAW
Type of Welding (manual, semi-automatic) Used:		Machine		Machine
Base Metal P Number to P Number:		P1		P1
Plate ☒ Pipe ☐ enter diameter:		N/A		2.875" OD Min.
Backing (metal, weld metal, double weld etc.):		Metal/Weld		With
Filler Metal or Electrode Specification(s) SFA#:		5.17		
Filler Metal or Electrode Classification(s):		EM14K		
Filler Metal or Electrode F - number(s):		F6		F6
Filler Type (solid metal, or flux cored/powder) GTAW or PAW:		Solid		N/A
Consumable Insert for GTAW or PAW:		N/A		N/A
Deposit Thickness for each process, electrode type, etc. (in.):		0.500"		Max. to weld
Process/Electrode 1: 3 layers minimum Yes ☒ No ☐	Process/Electrode 2: 3 layers minimum Yes ☐ No ☐			
Welding position (2G, 5G, 6G, 3F, etc.):		1G		Flat
Progression (Uphill or Downhill):		N/A		N/A
Inert Gas backing for GTAW, PAW, GMAW:		N/A		N/A
Transfer Mode (spray/globular or pulse to short circuit):		N/A		N/A
GTAW Current Type/ Polarity (AC, DCEP, DCEN):		DCEP		DCEP

Results

Visual Examination of Fit-Up Root Gap: **1/2"** Tack Welds: **Bridge** Length: **0.5"** Number: **4**

Root Pass (Describe Discontinuity if Unacceptable): **N/A. Metal Backing Bar**

Complete Weld (Describe Defects if Unacceptable): **OK**

Bend Test

☐ Transverse Root and Face QW-462.3a ☐ Longitudinal Root and Face QW-462.3b

☐ Pipe Bend Specimen, corrosion-resistant overlay QW-462.5c ☐ Plate Bend Specimen, corrosion-resistant overlay QW-462.5d

☒ Side Bend QW-462.2 ☐ Macro Test for Fusion QW-462.5b ☐ Macro Test for Fusion QW-462.5e

Bend Type	Result	Bend Type	Result	Bend Type	Result	Bend Type	Result
# 1 Side	Pass						
# 2 Side	Pass						

For alternative qualification of groove welds by radiography to QW-191

Radiographic Results: **N/A**

Fillet Weld-Fracture Test (QW-180): **N/A** Length and Percent of Defects: **N/A**

Macro Examination (QW-184): **N/A** Fillet Legs Size (in.): **N/A** X **N/A** Concavity/Convexity (in.): **N/A**

Other Tests: **Applicable to WPS 5B-104 PWHT (rev 1), 5B-105 PWHT (rev1)**

Record Information

Film or Specimens Evaluated by: **Bruce Cormier** Company: **GRB Enterprises Ltd.**

Welding Test Conducted by: **Bruce Cormier**

Mechanical Tests Conducted by: **GRB Enterprises Ltd.** Laboratory Test no.: **N/A**

Welding Supervised by: **5Blue Process Representative: Joelle Dery-Brochu**

We certify that the statements in this record are correct and that the test coupons were prepared, welded and tested in accordance with the requirements of Section IX of the ASME Code.

Accredited Organization: GRB ENTERPRISES LTD. AOQP No: 7107(C) Expiry Date: **May 21 2015**

Certified by: **Bruce Cormier** W.E.File: **E-00252** Date: **December 10, 2012**

PQ Card No. (When Issued): **18486** Performance Test Reference No.: **12-12-10-05**

Test Coupon ID No.: **Welder Name** Date Coupon is Retained To: **N/A**

GRB Enterprises Ltd
Edmonton Alberta

AOQP 7107(C)

WELDER PERFORMANCE QUALIFICATION CARD

ROBERT
Name

KLASSEN
Name

W-14037
ABSA File Number

This card is issued pursuant to the Safety Codes Act and the Pressure Welders Regulation. The performance qualification is in accordance with Section IX of the ASME BPV Code and subject to the limitations on the reverse side.

NOV 5, 2012
Date of Test

Welder Signature

BRUCE CORMIER
Welding Examiner (Print/Type)

18391
GRB Card No.

GRB Enterprises Ltd
Edmonton Alberta

AOQP 7107(C)

WELDER PERFORMANCE QUALIFICATION CARD

ROBERT
Name

KLASSEN
Name

W-14037
ABSA File Number

This card is issued pursuant to the Safety Codes Act and the Pressure Welders Regulation. The performance qualification is in accordance with Section IX of the ASME BPV Code and subject to the limitations on the reverse side.

NOV 5, 2012
Date of Test

Welder Signature

BRUCE CORMIER
Welding Examiner (Print/Type)

18392
GRB Card No.

Performance Qualification GRB Card No. 18391

Process(es): SMAW
Materials (P.No.): P1
Filler Metal (F.No): F3 F4
Min. Outside Pipe Diameter: 1" OD
Max Deposited Weld Metal: 0.104" MAX TO WELD
Position(s) Qualified: ALL
Backing: WITHOUT WITH
Backing Gas: NONE
Progression: UPHILL
#E00 252
Examiner File No.

NOV 5, 2014
P.Q. Expiry Date

Welding Examiner Signature

Performance Qualification GRB Card No. 18392

Process(es): GMAW SMAW
Materials (P.No.): P1
Filler Metal (F.No): F6 F4
Min. Outside Pipe Diameter: 1" OD
Max Deposited Weld Metal: 0.1375" 0.186"
Position(s) Qualified: ALL
Backing: WITHOUT WITH
Backing Gas: NONE
Progression: DOWN-HILL UPHILL
#E00 252
Examiner File No.

NOV 5, 2014
P.Q. Expiry Date

Welding Examiner Signature

Alberta — LABOUR
Boiler and Pressure Vessel Safety

Grade "B" Pressure Welder's Certificate of Competency

This is to Certify that: Robert David Klassen

having complied with provisions of the Boilers and Pressure Vessels Act is hereby granted a Grade "B" Pressure Welder's Certificate of Competency, and is authorized to engage in pressure welding in accordance with the prescribed Regulations.

Dated at Edmonton, this Sixteenth day of March 1992

W- 14037
ABB File No.

Chief Inspector

Performance Qualification GRB Card No. 18486

Process(es)	SAW	Materials (P.No.)	P1
Filler Metal (F.No)	F-6	Min. Outside Pipe Diameter	2.875"
Max Deposited Weld Metal	MAX. TO WELD	Position(s) Qualified	FLAT
Backing	WITH	Backing Gas	NONE
Progression	N/A	#E00252 Examiner File No.	
DEC 10 2014 P.Q. Expiry Date		Welding Examiner Signature	

GRB Enterprises Ltd
Edmonton Alberta
AOQP 7107(C)
WELDER PERFORMANCE QUALIFICATION CARD

ROBERT — W-14037
Name: KLASSEN — ABSA File Number
Name

This card is issued pursuant to the Safety Codes Act and the Pressure Welders Regulation. The performance qualification is in accordance with Section IX of the ASME BPV Code and subject to the limitations on the reverse side.

DEC 10 2012 — Welder Signature
Date of Test
BRUCE CORNIER — 18486
Welding Examiner (Print/Type) — GRB Card No.

C

GRB ENTERPRISES LTD. 9712 - 54 Ave. EDMONTON ALBERTA T6E 0A9 2.5" x 0.625" wt

Exhibit 9.3A / AB-76 A Modified ***WELDER QUALIFICATION RECORD (WQR)***

Welder's Name: **Brad Loewen** ABSA File No.: W- **26652** Stamp No.:

Identification of WPS followed by welder during welding of test coupon: 5B-102AW-PWHT W.P. Reg. # WP- **3146.2(r0)**

Base material(s) welded: **A 513 1026** Thickness: **0.625"** ☒ Test Coupon ☐ Prod. Weld

Testing Variables and Qualification Limits

Welding Variables (QW-350)	**Actual Values**		**Range Qualified**	
Welding Process(es) Used:	SMAW	SMAW	SMAW	SMAW
Type of Welding (manual, semi-automatic) Used:	Manual	Manual	Manual	Manual
Base Metal P Number to P Number:	P1	P1	P1	P1
Plate ☐ Pipe ☒ enter diameter:	NPS 2.5	NPS 2.5	1" OD Min.	1" OD Min.
Backing (metal, weld metal, double weld etc.):	None / Weld metal	Weld Metal	Without / With	With
Filler Metal or Electrode Specification(s) SFA#:	5.1	5.1		
Filler Metal or Electrode Classification(s):	E6010	E7018-1		
Filler Metal or Electrode F - number(s):	F3	F4	F3	F4
Filler Type (solid metal, or flux cored/powder) GTAW or PAW:	N/A	N/A	N/A	N/A
Consumable Insert for GTAW or PAW:	N/A	N/A	N/A	N/A
Deposit Thickness for each process, electrode type, etc. (in.):	0.125"	0.500"	0.250"	Max. to weld
Process/Electrode 1: 3 layers minimum Yes ☐ No ☒	Process/Electrode 2: 3 layers minimum Yes ☒ No ☐			
Welding position (2G, 5G, 6G, 3F, etc.):	6G	6G	All	All
Progression (Uphill or Downhill):	Uphill	Uphill	Uphill	Uphill
Inert Gas backing for GTAW, PAW, GMAW:	N/A	N/A	N/A	N/A
Transfer Mode (spray/globular or pulse to short circuit):	N/A	N/A	N/A	N/A
GTAW Current Type/ Polarity (AC, DCEP, DCEN):	DCEP	DCEP	DCEP	DCEP

Results

Visual Examination of Fit-Up Root Gap: **3/32"** Tack Welds: **Bridge** Length: **0.5"** Number: **3**

Root Pass (Describe Discontinuity if Unacceptable): **OK**

Complete Weld (Describe Defects if Unacceptable): **OK**

Bend Test

☐ Transverse Root and Face QW-462.3a ☐ Longitudinal Root and Face QW-462.3b

☐ Pipe Bend Specimen, corrosion-resistant overlay QW-462.5c ☐ Plate Bend Specimen, corrosion-resistant overlay QW-462.5d

☒ Side Bend QW-462.2 ☐ Macro Test for Fusion QW-462.5b ☐ Macro Test for Fusion QW-462.5e

Bend Type	Result	Bend Type	Result	Bend Type	Result	Bend Type	Result
# 1 Side	Pass	# 3 Side	Pass				
# 2 Side	Pass	# 4 Side	Pass				

For alternative qualification of groove welds by radiography to QW-191

Radiographic Results: **N/A**

Fillet Weld-Fracture Test (QW-180): **N/A** Length and Percent of Defects: **N/A**

Macro Examination (QW-184): **N/A** Fillet Legs Size (in.): **N/A** X **N/A** Concavity/Convexity (in.): **N/A**

Other Tests: **N/A**

Record Information

Film or Specimens Evaluated by: **Bruce Cormier** Company: **GRB Enterprises Ltd.**

Welding Test Conducted by: **Bruce Cormier**

Mechanical Tests Conducted by: **GRB Enterprises Ltd.** Laboratory Test no.: **N/A**

Welding Supervised by: **5Blue Representative: Andrew Ngo**

We certify that the statements in this record are correct and that the test coupons were prepared, welded and tested in accordance with the requirements of Section IX of the ASME Code.

Accredited Organization: GRB ENTERPRISES LTD. AOQP No: 7107(C) Expiry Date: **May 21 2015**

Certified by: **Bruce Cormier** W.E.File: **E-00252** Date: **July 16, 2013**

PQ Card No. (When Issued): **19319** Performance Test Reference No.: **13-07-16-04**

Test Coupon ID No.: **Welder Name** Date Coupon is Retained To: **N/A**

GRB ENTERPRISES LTD. 9712 - 54 Ave. EDMONTON ALBERTA T6E 0A9 2" sch 80

Exhibit 9.3A / AB-76 A Modified ***WELDER QUALIFICATION RECORD (WQR)***

Welder's Name: **Brad Loewen** ABSA File No.: W- **26652** Stamp No.:

Identification of WPS followed by welder during welding of test coupon: 5B103 AW/PWHT W.P. Reg. # WP- **3146.2 (r0)**

Base material(s) welded: **SA 106 GR B** Thickness: **0.218"** ☒ Test Coupon ☐ Prod. Weld

Testing Variables and Qualification Limits

Welding Variables (QW-350)	Actual Values		Range Qualified	
Welding Process(es) Used:	GMAW	SMAW	GMAW	SMAW
Type of Welding (manual, semi-automatic) Used:	Semi-Automatic	Manual	Semi-Automatic	Manual
Base Metal P Number to P Number:	P1	P1	P1	P1
Plate ☐ Pipe ☒ enter diameter:	NPS 2	NPS 2	1" OD Min.	1" OD Min.
Backing (metal, weld metal, double weld etc.):	None / Weld	Weld Metal	Without / With	With
Filler Metal or Electrode Specification(s) SFA#:	5.18	5.1		
Filler Metal or Electrode Classification(s):	ER70S-6	E7018-1		
Filler Metal or Electrode F - number(s):	F6	F4	F6	F4
Filler Type (solid metal, or flux cored/powder) GTAW or PAW:	Solid	N/A	Solid	N/A
Consumable Insert for GTAW or PAW:	N/A	N/A	N/A	N/A
Deposit Thickness for each process, electrode type, etc. (in.):	0.125"	0.093"	0.1375"	0.186"
Process/Electrode 1: 3 layers minimum Yes ☐ No ☒	Process/Electrode 2: 3 layers minimum Yes ☐ No ☒			
Welding position (2G, 5G, 6G, 3F, etc.):	6G	6G	All	All
Progression (Uphill or Downhill):	Downhill	Uphill	Downhill	Uphill
Inert Gas backing for GTAW, PAW, GMAW:	N/A	N/A	N/A	N/A
Transfer Mode (spray/globular or pulse to short circuit):	Short Circuit	N/A	Short Circuit	N/A
GTAW Current Type/ Polarity (AC, DCEP, DCEN):	DCEP	DCEP	DCEP	DCEP

Results

Visual Examination of Fit-Up Root Gap: **1/8"** Tack Welds: **Bridge** Length: **0.5"** Number: **3**

Root Pass (Describe Discontinuity if Unacceptable): **OK**

Complete Weld (Describe Defects if Unacceptable): **OK**

Bend Test

☒ Transverse Root and Face QW-462.3a ☐ Longitudinal Root and Face QW-462.3b

☐ Pipe Bend Specimen, corrosion-resistant overlay QW-462.5c ☐ Plate Bend Specimen, corrosion-resistant overlay QW-462.5d

☐ Side Bend QW-462.2 ☐ Macro Test for Fusion QW-462.5b ☐ Macro Test for Fusion QW-462.5e

Bend Type	Result	Bend Type	Result	Bend Type	Result	Bend Type	Result
# 1 Root	Pass	# 3 Root	Pass				
# 2 Face	Pass	# 4 Face	Pass				

For alternative qualification of groove welds by radiography to QW-191

Radiographic Results: **N/A**

Fillet Weld-Fracture Test (QW-180): **N/A** Length and Percent of Defects: **N/A**

Macro Examination (QW-184): **N/A** Fillet Legs Size (in.): **N/A** X **N/A** Concavity/Convexity (in.): **N/A**

Other Tests: **N/A**

Record Information

Film or Specimens Evaluated by: **Bruce Cormier** Company: **GRB Enterprises Ltd.**

Welding Test Conducted by: **Bruce Cormier**

Mechanical Tests Conducted by: **GRB Enterprises Ltd.** Laboratory Test no.: **N/A**

Welding Supervised by: **5Blue Representative: Andrew Ngo**

We certify that the statements in this record are correct and that the test coupons were prepared, welded and tested in accordance with the requirements of Section IX of the ASME Code.

Accredited Organization: GRB ENTERPRISES LTD. AOQP No: 7107(C) Expiry Date: **May 21 2015**

Certified by: **Bruce Cormier** _____ W.E.File: **E-00252** Date: **July 16, 2013**

PQ Card No. (When Issued): **19320** Performance Test Reference No.: **13-07-16-05**

Test Coupon ID No.: **Welder Name** Date Coupon is Retained To: **N/A**

Welder Qualification

This card is valid only while employed by a CWB certified company

Test Centre Welder Test Record

Transferable Welder

Name: BRAD W. LOEWEN — Exp Date: Jul 05, 2015

Test Facility: GRB Enterprises Ltd.

Thickness Range: 3mm & above — Material: Carbon Steel

Process: SMAW

Mode: MANUAL — Standard: CSA W47.1

Classification: S

Electrode: F4

Class: FLAT/HORIZONTAL/VERTICAL UP/OVERHEAD

See Reverse for Conditions

Alberta
Municipal Affairs and Housing

21617

ABSA
the pressure equipment safety authority

Grade "B" Pressure Welder's Certificate of Competency

This is to certify that Brad Loewen having complied with provisions of the Safely Codes Act, is authorized to engage in pressure welding in accordance with the prescribed Regulations.

Dated at Edmonton
January 03, 2008

W-26652
File no.

Chief Inspector and Administrator

GRB Enterprises Ltd
Edmonton Alberta — AOQP 7107(C)

WELDER PERFORMANCE QUALIFICATION CARD

BRAD
Name
LOEWEN — W-26652
Name — ABSA File Number

This card is issued pursuant to the Safely Codes Act and the Pressure Welders Regulation. The performance qualification is in accordance with Section IX of the ASME BPV Code and subject to the limitations on the reverse side.

JULY 16, 2013 — Brad Loewen
Date of Test — Welder Signature

BRUCE CORMIER — 19319
Welding Examiner (Print/Type) — GRB Card No.

GRB Enterprises Ltd
Edmonton Alberta — AOQP 7107(C)

WELDER PERFORMANCE QUALIFICATION CARD

BRAD
Name
LOEWEN — W-26652
Name — ABSA File Number

This card is issued pursuant to the Safely Codes Act and the Pressure Welders Regulation. The performance qualification is in accordance with Section IX of the ASME BPV Code and subject to the limitations on the reverse side.

JULY 16, 2013 — Brad Loewen
Date of Test — Welder Signature

BRUCE CORMIER — 19320
Welding Examiner (Print/Type) — GRB Card No.

Conditions Of Use

1. This card remains the property of the CWB and may be recalled and/or cancelled at any time. Fraudulent use of this card can result in loss of qualifications of the individual and/or the certified company employing the individual.
2. This card must be available for inspection by any CWB representative or other designated officials at all times.
3. This qualification may be revoked by the CWB if the individual is not engaged in the process qualified for a period of three months or more.

For any questions regarding this qualification, please contact:

1-800-844-6790 | www.cwbgroup.org

CWB QUASAR INTEG OPITAGS

Performance Qualification GRB Card No. 19320

Process(es)	GMAW	SMAW	Materials (P.No.)	P1	
Filler Metal (F.No)	F6	F4	Min. Outside Pipe Diameter	1" OD	
Max Deposited Weld Metal	0.135"	0.186"	Position(s) Qualified	ALL	
Backing	WITHOUT WITH	WITH	Backing Gas	NONE	
Progression	DOWNHILL	UPHILL	#E00 252 Examiner File No.		

JULY 16, 2015 — P.Q. Expiry Date

Welding Examiner Signature

Performance Qualification GRB Card No. 19319

Process(es)	SMAW		Materials (P.No.)	P1	
Filler Metal (F.No)	F3	F4	Min. Outside Pipe Diameter	1" OD	
Max Deposited Weld Metal	0.250"	MAX. TO WELD	Position(s) Qualified	ALL	
Backing	WITHOUT WITH	WITH	Backing Gas	NONE	
Progression	UPHILL		#E00 252 Examiner File No.		

JULY 16, 2015 — P.Q. Expiry Date

Welding Examiner Signature

GRB ENTERPRISES LTD.
* Pre-Employment Courses
* Journeyman Upgrading
* CWB/ASME Training & Testing
* SMAW, GMAW, GTAW, FCAW
9712 - 54 Ave. Edmonton, AB. T6E0A9 Phone: (780) 436-7342 Fax: (780) 436-7344

Unofficial CWB Test Results

Date: July 5, 2013
Examiner: Maurice Flieder
Test Candidate: Brad Loewen

Your official test record from the Canadian Welding Bureau will be mailed to you in approximately one week.

SMAW	X	FCAW		GMAW	

TEST POSITION	PASS	FAIL	NOT TESTED
Flat	X		
Horizontal	X		
Vertical	X		
Overhead	X		
Check-test			X

Official Documentation from CWB should arrive within 14 days. If there is any discrepancy between this letter and CWB information – CWB documentation will prevail.

David Chalut
Student Administrator

H

GRB ENTERPRISES LTD. 9712 - 54 Ave. EDMONTON ALBERTA T6E 0A9 2.5" x 0.625" wt

Exhibit 9.3A / AB-76 A Modified ***WELDER QUALIFICATION RECORD (WQR)***

Welder's Name: **Michael Moench** ABSA File No.: W- **21197** Stamp No.:

Identification of WPS followed by welder during welding of test coupon: 5B-102AW-PWHT W.P. Reg. # WP- **3146.2(r0)**

Base material(s) welded: **SA 106 GR B** Thickness: **0.625"** ☒ Test Coupon ☐ Prod. Weld

Testing Variables and Qualification Limits

Welding Variables (QW-350)	**Actual Values**		**Range Qualified**	
Welding Process(es) Used:	SMAW	SMAW	SMAW	SMAW
Type of Welding (manual, semi-automatic) Used:	Manual	Manual	Manual	Manual
Base Metal P Number to P Number:	P1	P1	P1	P1
Plate ☐ Pipe ☒ enter diameter:	NPS 2.5	NPS 2.5	1" OD Min.	1" OD Min.
Backing (metal, weld metal, double weld etc.):	None / Weld metal	Weld Metal	Without / With	With
Filler Metal or Electrode Specification(s) SFA#:	5.1	5.1		
Filler Metal or Electrode Classification(s):	E6010	E7018-1		
Filler Metal or Electrode F - number(s):	F3	F4	F3	F4
Filler Type (solid metal, or flux cored/powder) GTAW or PAW:	N/A	N/A	N/A	N/A
Consumable Insert for GTAW or PAW:	N/A	N/A	N/A	N/A
Deposit Thickness for each process, electrode type, etc. (in.):	0.125"	0.500"	0.250"	Max. to weld
Process/Electrode 1: 3 layers minimum Yes ☐ No ☒	Process/Electrode 2: 3 layers minimum Yes ☒ No ☐			
Welding position (2G, 5G, 6G, 3F, etc.):	6G	6G	All	All
Progression (Uphill or Downhill):	Uphill	Uphill	Uphill	Uphill
Inert Gas backing for GTAW, PAW, GMAW:	N/A	N/A	N/A	N/A
Transfer Mode (spray/globular or pulse to short circuit):	N/A	N/A	N/A	N/A
GTAW Current Type/ Polarity (AC, DCEP, DCEN):	DCEP	DCEP	DCEP	DCEP

Results

Visual Examination of Fit-Up Root Gap: **3/32"** Tack Welds: **Bridge** Length: **0.5"** Number: **3**

Root Pass (Describe Discontinuity if Unacceptable): **OK**

Complete Weld (Describe Defects if Unacceptable): **OK**

Bend Test

☐ Transverse Root and Face QW-462.3a ☐ Longitudinal Root and Face QW-462.3b

☐ Pipe Bend Specimen, corrosion-resistant overlay QW-462.5c ☐ Plate Bend Specimen, corrosion-resistant overlay QW-462.5d

☒ Side Bend QW-462.2 ☐ Macro Test for Fusion QW-462.5b ☐ Macro Test for Fusion QW-462.5e

Bend Type	Result	Bend Type	Result	Bend Type	Result	Bend Type	Result
# 1 Side	Pass	# 3 Side	Pass				
# 2 Side	Pass	# 4 Side	Pass				

For alternative qualification of groove welds by radiography to QW-191

Radiographic Results: **N/A**

Fillet Weld-Fracture Test (QW-180): **N/A** Length and Percent of Defects: **N/A**

Macro Examination (QW-184): **N/A** Fillet Legs Size (in.): **N/A** X **N/A** Concavity/Convexity (in.): **N/A**

Other Tests: **N/A**

Record Information

Film or Specimens Evaluated by: **G.R. Belhumeur** Company: **GRB Enterprises Ltd.**

Welding Test Conducted by: **G.R. Belhumeur**

Mechanical Tests Conducted by: **GRB Enterprises Ltd.** Laboratory Test no.: **N/A**

Welding Supervised by: **5Blue Process Representative: Joelle Dery-Brochu**

We certify that the statements in this record are correct and that the test coupons were prepared, welded and tested in accordance with the requirements of Section IX of the ASME Code.

Accredited Organization: GRB ENTERPRISES LTD., AOQP No: 7107(C) Expiry Date: **May 21 2015**

Certified by: **Bruce Cormier** W.E.File: **E-00252** Date: **May 13, 2013**

PQ Card No. (When Issued): **19052** Performance Test Reference No.: **13-05-13-08**

Test Coupon ID No.: **Welder Name** Date Coupon is Retained To: **N/A**

GRB ENTERPRISES LTD. 9712 - 54 Ave. EDMONTON ALBERTA T6E 0A9 2" sch 160

Exhibit 9.3A / AB-76 A Modified *WELDER QUALIFICATION RECORD (WQR)*

Welder's Name: **Michael Moench** ABSA File No.: W-**21197** Stamp No.:

Identification of WPS followed by welder during welding of test coupon: **5B103 AW/PWHT** W.P. Reg. # WP-**3146.2 (r0)**

Base material(s) welded: **SA 106 GR B** Thickness: **0.344"** ☒ Test Coupon ☐ Prod. Weld

Testing Variables and Qualification Limits

Welding Variables (QW-350)	Actual Values		Range Qualified	
Welding Process(es) Used:	GMAW	SMAW	GMAW	SMAW
Type of Welding (manual, semi-automatic) Used:	Semi-Automatic	Manual	Semi-Automatic	Manual
Base Metal P Number to P Number:	P1	P1	P1	P1
Plate ☐ Pipe ☒ enter diameter:	NPS 2	NPS 2	1" OD Min.	1" OD Min.
Backing (metal, weld metal, double weld etc.):	None / Weld	Weld Metal	Without / With	With
Filler Metal or Electrode Specification(s) SFA#:	5.18	5.1		
Filler Metal or Electrode Classification(s):	ER70S-6	E7018-1		
Filler Metal or Electrode F - number(s):	F6	F4	F6	F4
Filler Type (solid metal, or flux cored/powder) GTAW or PAW:	Solid	N/A	Solid	N/A
Consumable Insert for GTAW or PAW:	N/A	N/A	N/A	N/A
Deposit Thickness for each process, electrode type, etc. (in.):	0.125"	0.219"	0.1375"	0.438"
Process/Electrode 1: 3 layers minimum Yes ☐ No ☒	Process/Electrode 2: 3 layers minimum Yes ☐ No ☒			
Welding position (2G, 5G, 6G, 3F, etc.):	6G	6G	All	All
Progression (Uphill or Downhill):	Downhill	Uphill	Downhill	Uphill
Inert Gas backing for GTAW, PAW, GMAW:	N/A	N/A	N/A	N/A
Transfer Mode (spray/globular or pulse to short circuit):	Short Circuit	N/A	Short Circuit	N/A
GTAW Current Type/ Polarity (AC, DCEP, DCEN):	DCEP	DCEP	DCEP	DCEP

Results

Visual Examination of Fit-Up Root Gap: **1/8"** Tack Welds: **Bridge** Length: **0.5"** Number: **3**

Root Pass (Describe Discontinuity if Unacceptable): **OK**

Complete Weld (Describe Defects if Unacceptable): **OK**

Bend Test

☒ Transverse Root and Face QW-462.3a ☐ Longitudinal Root and Face QW-462.3b

☐ Pipe Bend Specimen, corrosion-resistant overlay QW-462.5c ☐ Plate Bend Specimen, corrosion-resistant overlay QW-462.5d

☐ Side Bend QW-462.2 ☐ Macro Test for Fusion QW-462.5b ☐ Macro Test for Fusion QW-462.5e

Bend Type	Result	Bend Type	Result	Bend Type	Result	Bend Type	Result
# 1 Root	Pass	# 3 Root	Pass				
# 2 Face	Pass	# 4 Face	Pass				

For alternative qualification of groove welds by radiography to QW-191

Radiographic Results: **N/A**

Fillet Weld-Fracture Test (QW-180): **N/A** Length and Percent of Defects: **N/A**

Macro Examination (QW-184): **N/A** Fillet Legs Size (in.): **N/A** X **N/A** Concavity/Convexity (in.): **N/A**

Other Tests: **N/A**

Record Information

Film or Specimens Evaluated by: **G.R. Belhumeur** Company: **GRB Enterprises Ltd.**

Welding Test Conducted by: **G.R. Belhumeur**

Mechanical Tests Conducted by: **GRB Enterprises Ltd.** Laboratory Test no.: **N/A**

Welding Supervised by: **5Blue Representative: Joelle Dery-Brochu**

We certify that the statements in this record are correct and that the test coupons were prepared, welded and tested in accordance with the requirements of Section IX of the ASME Code.

Accredited Organization: GRB ENTERPRISES LTD. AOQP No: 7107(C) Expiry Date: **May 21 2015**

Certified by: **Bruce Cormier** W.E.File: **E-00252** Date: **May 13, 2013**

PQ Card No. (When Issued): **19053** Performance Test Reference No.: **13-05-13-09**

Test Coupon ID No.: **Welder Name** Date Coupon is Retained To: **N/A**

Performance Qualification GRB Card No. 19053

Process(es): GMAW SMAW — Materials (P.No.): P1

Filler Metal (F.No): F6 F4 — Min. Outside Pipe Diameter: 1" OD

Max Deposited Weld Metal: 0.1375" 0.438" — Position(s) Qualified: ALL

Backing: WITHOUT WITH — Backing Gas: NONE

Progression: DOWNHILL UPHILL — #E00 252 Examiner File No.

MAY 13, 2015 — P.Q. Expiry Date

Welding Examiner Signature

GRB Enterprises Ltd
Edmonton Alberta

AOQP 7107(C)

WELDER PERFORMANCE QUALIFICATION CARD

MICHAEL
Name
MOENCH
Name
W-21197
ABSA File Number

This card is issued pursuant to the Safety Codes Act and the Pressure Welders Regulation. The performance qualification is in accordance with Section IX of the ASME BPV Code and subject to the limitations on the reverse side.

MAY 13, 2013
Date of Test

Welder Signature

BRUCE CORMIER
Welding Examiner (Print/Type)

19053
GRB Card No.

Performance Qualification GRB Card No. 19052

Process(es): SMAW — Materials (P.No.): P1

Filler Metal (F.No): F3 F4 — Min. Outside Pipe Diameter: 1" OD

Max Deposited Weld Metal: 0.250" MAX. TO WELD — Position(s) Qualified: ALL

Backing: WITHOUT WITH — Backing Gas: NONE

Progression: UPHILL — #E00 252 Examiner File No.

MAY 13, 2015 — P.Q. Expiry Date

Welding Examiner Signature

GRB Enterprises Ltd
Edmonton Alberta

AOQP 7107(C)

WELDER PERFORMANCE QUALIFICATION CARD

MICHAEL
Name
MOENCH
Name
W-21197
ABSA File Number

This card is issued pursuant to the Safety Codes Act and the Pressure Welders Regulation. The performance qualification is in accordance with Section IX of the ASME BPV Code and subject to the limitations on the reverse side.

MAY 13, 2013
Date of Test

Welder Signature

BRUCE CORMIER
Welding Examiner (Print/Type)

19052
GRB Card No.



012-0/896318 098402A

JOURNEYMAN CERTIFICATE

THIS IS TO CERTIFY THAT
MICHAEL JAMES MOENCH
HAS COMPLETED AN ALBERTA APPRENTICESHIP PROGRAM AND HAVING ACHIEVED THE STANDARDS ESTABLISHED UNDER THE ALBERTA APPRENTICESHIP AND INDUSTRY TRAINING ACT, IS HEREBY AUTHORIZED TO WORK IN THE TRADE AS A JOURNEYMAN AND TO USE THE TITLE CERTIFIED JOURNEYMAN

WELDER

EFFECTIVE DATE
March 17th, 2009

ISSUE DATE
April 7th, 2009

Alberta Government

HONOURABLE DOUG HORNER
MINISTER OF ADVANCED EDUCATION AND TECHNOLOGY

SHIRLEY DUE EXECUTIVE
DIRECTOR OF APPRENTICESHIP & INDUSTRY TRAINING

Alberta

ABSA
the pressure equipment safety authority

24145

Grade "B" Pressure Welder's
Certificate of Competency

This is to certify that Michael Moench
having complied with provisions of the Safety Codes Act, is authorized to engage in pressure welding in accordance with the prescribed Regulations.

Dated at Edmonton
November 18, 2010

W-21197
File no.

Chief Inspector and Administrator

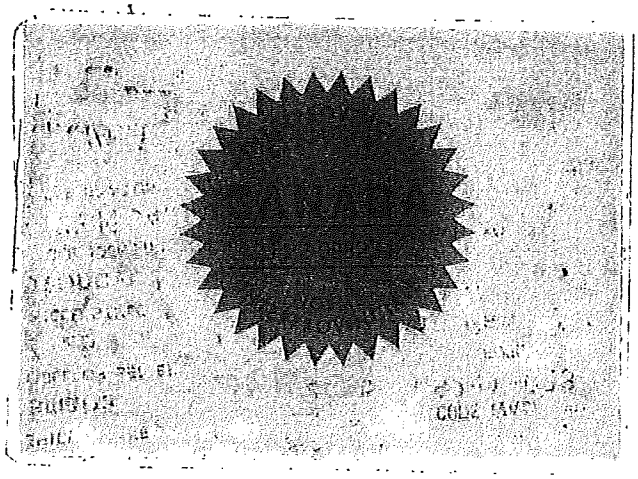

J

GRB ENTERPRISES LTD. 9712 - 54 Ave. EDMONTON ALBERTA T6E 0A9 2.5" x 0.625" wt

Exhibit 9.3A / AB-76 A Modified ***WELDER QUALIFICATION RECORD (WQR)***

Welder's Name: **Brent Marquardt** ABSA File No.: W-**20214** Stamp No.:

Identification of WPS followed by welder during welding of test coupon: 5B-102AW-PWHT W.P. Reg. # WP-**3146.2(r0)**

Base material(s) welded: **SA 106 GR B** Thickness: **0.625"** ☒ Test Coupon ☐ Prod. Weld

Testing Variables and Qualification Limits

Welding Variables (QW-350)	Actual Values		Range Qualified	
Welding Process(es) Used:	SMAW	SMAW	SMAW	SMAW
Type of Welding (manual, semi-automatic) Used:	Manual	Manual	Manual	Manual
Base Metal P Number to P Number:	P1	P1	P1	P1
Plate ☐ Pipe ☒ enter diameter:	NPS 2.5	NPS 2.5	1" OD Min.	1" OD Min.
Backing (metal, weld metal, double weld etc.):	None / Weld metal	Weld Metal	Without / With	With
Filler Metal or Electrode Specification(s) SFA#:	5.1	5.1		
Filler Metal or Electrode Classification(s):	E6010	E7018-1		
Filler Metal or Electrode F - number(s):	F3	F4	F3	F4
Filler Type (solid metal, or flux cored/powder) GTAW or PAW:	N/A	N/A	N/A	N/A
Consumable Insert for GTAW or PAW:	N/A	N/A	N/A	N/A
Deposit Thickness for each process, electrode type, etc. (in.):	0.125"	0.500"	0.250"	Max. to weld
Process/Electrode 1: 3 layers minimum Yes ☐ No ☒	Process/Electrode 2: 3 layers minimum Yes ☒ No ☐			
Welding position (2G, 5G, 6G, 3F, etc.):	6G	6G	All	All
Progression (Uphill or Downhill):	Uphill	Uphill	Uphill	Uphill
Inert Gas backing for GTAW, PAW, GMAW:	N/A	N/A	N/A	N/A
Transfer Mode (spray/globular or pulse to short circuit):	N/A	N/A	N/A	N/A
GTAW Current Type/ Polarity (AC, DCEP, DCEN):	DCEP	DCEP	DCEP	DCEP

Results

Visual Examination of Fit-Up Root Gap: **3/32"** Tack Welds: **Bridge** Length: **0.5"** Number: **3**

Root Pass (Describe Discontinuity if Unacceptable): **OK**

Complete Weld (Describe Defects if Unacceptable): **OK**

Bend Test

☐ Transverse Root and Face QW-462.3a ☐ Longitudinal Root and Face QW-462.3b

☐ Pipe Bend Specimen, corrosion-resistant overlay QW-462.5c ☐ Plate Bend Specimen, corrosion-resistant overlay QW-462.5d

☒ Side Bend QW-462.2 ☐ Macro Test for Fusion QW-462.5b ☐ Macro Test for Fusion QW-462.5e

Bend Type	Result	Bend Type	Result	Bend Type	Result	Bend Type	Result
# 1 Side	Pass	# 3 Side	Pass				
# 2 Side	Pass	# 4 Side	Pass				

For alternative qualification of groove welds by radiography to QW-191

Radiographic Results: **N/A**

Fillet Weld-Fracture Test (QW-180): **N/A** Length and Percent of Defects: **N/A**

Macro Examination (QW-184): **N/A** Fillet Legs Size (in.): **N/A** X **N/A** Concavity/Convexity (in.): **N/A**

Other Tests: **N/A**

Record Information

Film or Specimens Evaluated by: **G.R. Belhumeur** Company: **GRB Enterprises Ltd.**

Welding Test Conducted by: **G.R. Belhumeur**

Mechanical Tests Conducted by: **GRB Enterprises Ltd.** Laboratory Test no.: **N/A**

Welding Supervised by: **5Blue Process Representative: Joelle Dery-Brochu**

We certify that the statements in this record are correct and that the test coupons were prepared, welded and tested in accordance with the requirements of Section IX of the ASME Code.

Accredited Organization: GRB ENTERPRISES LTD. AOQP No: 7107(C) Expiry Date: **May 21 2015**

Certified by: **Bruce Cormier** _____ W.E.File: **E-00252** Date: **May 13, 2013**

PQ Card No. (When Issued): **19050** Performance Test Reference No.: **13-05-13-06**

Test Coupon ID No.: **Welder Name** Date Coupon is Retained To: **N/A**

GRB ENTERPRISES LTD. 9712 - 54 Ave. EDMONTON ALBERTA T6E 0A9 2" sch 160

Exhibit 9.3A / AB-76 A Modified *WELDER QUALIFICATION RECORD (WQR)*

Welder's Name: **Brent Marquardt** ABSA File No.: W- **20214** Stamp No.:

Identification of WPS followed by welder during welding of test coupon: **5B103 AW/PWHT** W.P. Reg. # WP- **3146.2 (r0)**

Base material(s) welded: **SA 106 GR B** Thickness: **0.344"** ☒ Test Coupon ☐ Prod. Weld

Testing Variables and Qualification Limits

Welding Variables (QW-350)	Actual Values		Range Qualified	
Welding Process(es) Used:	GMAW	SMAW	GMAW	SMAW
Type of Welding (manual, semi-automatic) Used:	Semi-Automatic	Manual	Semi-Automatic	Manual
Base Metal P Number to P Number:	P1	P1	P1	P1
Plate ☐ Pipe ☒ enter diameter:	NPS 2	NPS 2	1" OD Min.	1" OD Min.
Backing (metal, weld metal, double weld etc.):	None / Weld	Weld Metal	Without / With	With
Filler Metal or Electrode Specification(s) SFA#:	5.18	5.1		
Filler Metal or Electrode Classification(s):	ER70S-6	E7018-1		
Filler Metal or Electrode F - number(s):	F6	F4	F6	F4
Filler Type (solid metal, or flux cored/powder) GTAW or PAW:	Solid	N/A	Solid	N/A
Consumable Insert for GTAW or PAW:	N/A	N/A	N/A	N/A
Deposit Thickness for each process, electrode type, etc. (in.):	0.125"	0.219"	0.1375"	0.438"
Process/Electrode 1: 3 layers minimum Yes ☐ No ☒	Process/Electrode 2: 3 layers minimum Yes ☐ No ☒			
Welding position (2G, 5G, 6G, 3F, etc.):	6G	6G	All	All
Progression (Uphill or Downhill):	Downhill	Uphill	Downhill	Uphill
Inert Gas backing for GTAW, PAW, GMAW:	N/A	N/A	N/A	N/A
Transfer Mode (spray/globular or pulse to short circuit):	Short Circuit	N/A	Short Circuit	N/A
GTAW Current Type/ Polarity (AC, DCEP, DCEN):	DCEP	DCEP	DCEP	DCEP

Results

Visual Examination of Fit-Up Root Gap: **1/8"** Tack Welds: **Bridge** Length: **0.5"** Number: **3**

Root Pass (Describe Discontinuity if Unacceptable): **OK**

Complete Weld (Describe Defects if Unacceptable): **OK**

Bend Test

☒ Transverse Root and Face QW-462.3a ☐ Longitudinal Root and Face QW-462.3b

☐ Pipe Bend Specimen, corrosion-resistant overlay QW-462.5c ☐ Plate Bend Specimen, corrosion-resistant overlay QW-462.5d

☐ Side Bend QW-462.2 ☐ Macro Test for Fusion QW-462.5b ☐ Macro Test for Fusion QW-462.5e

Bend Type	Result	Bend Type	Result	Bend Type	Result	Bend Type	Result
# 1 Root	Pass	# 3 Root	Pass				
# 2 Face	Pass	# 4 Face	Pass				

For alternative qualification of groove welds by radiography to QW-191

Radiographic Results: **N/A**

Fillet Weld-Fracture Test (QW-180): **N/A** Length and Percent of Defects: **N/A**

Macro Examination (QW-184): **N/A** Fillet Legs Size (in.): **N/A** X **N/A** Concavity/Convexity (in.): **N/A**

Other Tests: **N/A**

Record Information

Film or Specimens Evaluated by: **G.R. Belhumeur** Company: **GRB Enterprises Ltd.**

Welding Test Conducted by: **G.R. Belhumeur**

Mechanical Tests Conducted by: **GRB Enterprises Ltd.** Laboratory Test no.: **N/A**

Welding Supervised by: **5Blue Representative: Joelle Dery-Brochu**

We certify that the statements in this record are correct and that the test coupons were prepared, welded and tested in accordance with the requirements of Section IX of the ASME Code.

Accredited Organization: GRB ENTERPRISES LTD. AOQP No: 7107(C) Expiry Date: **May 21 2015**

Certified by: **Bruce Cormier** W.E.File: **E-00252** Date: **May 13, 2013**

PQ Card No. (When Issued): **19051** Performance Test Reference No.: **13-05-13-07**

Test Coupon ID No.: **Welder Name** Date Coupon is Retained To: **N/A**

GRB ENTERPRISES LTD. 9712 - 54 Ave. EDMONTON ALBERTA T6E 0A9 2.5" sch xxh

Exhibit 9.3A / AB-76 A Modified ***WELDER QUALIFICATION RECORD (WQR)***

Welder's Name: **Brent Marquardt** ABSA File No.: W- **20214** Stamp No.:

Identification of WPS followed by welder during welding of test coupon: **5B-108 (rev 1)** W.P. Reg. # WP- **3146.2**

Base material(s) welded: **SA 106 GR B** Thickness: **0.625"** ☒ Test Coupon ☐ Prod. Weld

Testing Variables and Qualification Limits

Welding Variables (QW-350)	**Actual Values**		**Range Qualified**	
Welding Process(es) Used:	GMAW	SMAW	GMAW	SMAW
Type of Welding (manual, semi-automatic) Used:	Semi-Automatic	Manual	Semi-Automatic	Manual
Base Metal P Number to P Number:	P1	P1	P1through P8	P1 through P8
Plate ☐ Pipe ☒ enter diameter:	NPS 2.5	NPS 2.5	1" OD Min.	1" OD Min.
Backing (metal, weld metal, double weld etc.):	None / Weld	Weld Metal	Without / With	With
Filler Metal or Electrode Specification(s) SFA#:	5.9	5.4		
Filler Metal or Electrode Classification(s):	ER316Si	E316L-16		
Filler Metal or Electrode F - number(s):	F6	F5	F6	F5
Filler Type (solid metal, or flux cored/powder) GTAW or PAW:	Solid	N/A	Solid	N/A
Consumable Insert for GTAW or PAW:	N/A	N/A	N/A	N/A
Deposit Thickness for each process, electrode type, etc. (in.):	0.125"	0.500"	0.1375"	Max. to weld
Process/Electrode 1: 3 layers minimum Yes ☐ No ☒	Process/Electrode 2: 3 layers minimum Yes ☒ No ☐			
Welding position (2G, 5G, 6G, 3F, etc.):	SP*	1G	SP/Flat	Flat
Progression (Uphill or Downhill):	N/A	N/A	N/A	N/A
Inert Gas backing for GTAW, PAW, GMAW:	N/A	N/A	N/A	N/A
Transfer Mode (spray/globular or pulse to short circuit):	Short Circuit	N/A	Short Circuit	N/A
GTAW Current Type/ Polarity (AC, DCEP, DCEN):	DCEP	DCEP	DCEP	DCEP

Results

Visual Examination of Fit-Up Root Gap: **1/8"** Tack Welds: **Bridge** Length: **0.5"** Number: **3**

Root Pass (Describe Discontinuity if Unacceptable): **OK**

Complete Weld (Describe Defects if Unacceptable): **OK**

Bend Test

☐ Transverse Root and Face QW-462.3a ☐ Longitudinal Root and Face QW-462.3b

☐ Pipe Bend Specimen, corrosion-resistant overlay QW-462.5c ☐ Plate Bend Specimen, corrosion-resistant overlay QW-462.5d

☒ Side Bend QW-462.2 ☐ Macro Test for Fusion QW-462.5b ☐ Macro Test for Fusion QW-462.5e

Bend Type	Result	Bend Type	Result	Bend Type	Result	Bend Type	Result
# 1 Side	Pass						
# 2 Side	Pass						

For alternative qualification of groove welds by radiography to QW-191

Radiographic Results: **N/A**

Fillet Weld-Fracture Test (QW-180): **N/A** Length and Percent of Defects: **N/A**

Macro Examination (QW-184): **N/A** Fillet Legs Size (in.): **N/A** X **N/A** Concavity/Convexity (in.): **N/A**

Other Tests: **Applicable to WPS 5B-107(rev 0) Special Position 60 degrees from TDC.**

Record Information

Film or Specimens Evaluated by: **Bruce Cormier** Company: **GRB Enterprises Ltd.**

Welding Test Conducted by: **Bruce Cormier**

Mechanical Tests Conducted by: **GRB Enterprises Ltd.** Laboratory Test no.: **N/A**

Welding Supervised by: **5Blue Process Representative: Joelle Dery-Brochu**

We certify that the statements in this record are correct and that the test coupons were prepared, welded and tested in accordance with the requirements of Section IX of the ASME Code.

Accredited Organization: GRB ENTERPRISES LTD. AOQP No: 7107(C) Expiry Date: **May 21 2015**

Certified by: **Bruce Cormier** _____ W.E.File: **E-00252** Date: **August 08, 2012**

PQ Card No. (When Issued): **18024** Performance Test Reference No.: **12-08-08-10**

Test Coupon ID No.: **Welder Name** Date Coupon is Retained To: **N/A**

GRB ENTERPRISES LTD. 9712 - 54 Ave. EDMONTON ALBERTA T6E 0A9 2.5" sch XXH

Exhibit 9.3A / AB-76 A Modified ***WELDER QUALIFICATION RECORD (WQR)***

Welder's Name: **Brent Marquardt** ABSA File No.: W- **20214** Stamp No.:

Identification of WPS followed by welder during welding of test coupon: **5B-111(rev0)** W.P. Reg. # WP- **3146.2**

Base material(s) welded: **SA 106 GR B** Thickness: **0.552"** ☒ Test Coupon ☐ Prod. Weld

Testing Variables and Qualification Limits

Welding Variables (QW-350)	**Actual Values**		**Range Qualified**	
Welding Process(es) Used:	GTAW		GTAW	
Type of Welding (manual, semi-automatic) Used:	Manual		Manual	
Base Metal P Number to P Number:	P1		P1 through P8	
Plate ☐ Pipe ☒ enter diameter:	NPS 2.5		1" OD Min.	
Backing (metal, weld metal, double weld etc.):	None / Weld		Without / With	
Filler Metal or Electrode Specification(s) SFA#:	5.9			
Filler Metal or Electrode Classification(s):	ER316L			
Filler Metal or Electrode F - number(s):	F6		F6	
Filler Type (solid metal, or flux cored/powder) GTAW or PAW:	Solid		Solid	
Consumable Insert for GTAW or PAW:	N/A		N/A	
Deposit Thickness for each process, electrode type, etc. (in.):	0.552"		Max. to weld	
Process/Electrode 1: 3 layers minimum Yes ☒ No ☐	Process/Electrode 2: 3 layers minimum Yes ☐ No ☐			
Welding position (2G, 5G, 6G, 3F, etc.):	6G		All	
Progression (Uphill or Downhill):	Uphill		Uphill	
Inert Gas backing for GTAW, PAW, GMAW:	Argon		With	
Transfer Mode (spray/globular or pulse to short circuit):	N/A		N/A	
GTAW Current Type/ Polarity (AC, DCEP, DCEN):	DCEN		DCEN	

Results

Visual Examination of Fit-Up Root Gap: **5/32"** Tack Welds: **Bridge** Length: **0.5"** Number: **3**

Root Pass (Describe Discontinuity if Unacceptable): **OK**

Complete Weld (Describe Defects if Unacceptable): **OK**

Bend Test

☐ Transverse Root and Face QW-462.3a ☐ Longitudinal Root and Face QW-462.3b

☐ Pipe Bend Specimen, corrosion-resistant overlay QW-462.5c ☐ Plate Bend Specimen, corrosion-resistant overlay QW-462.5d

☒ Side Bend QW-462.2 ☐ Macro Test for Fusion QW-462.5b ☐ Macro Test for Fusion QW-462.5e

Bend Type	Result	Bend Type	Result	Bend Type	Result	Bend Type	Result
# 1 Side	Pass	# 3 Side	Pass				
# 2 Side	Pass	# 4 Side	Pass				

For alternative qualification of groove welds by radiography to QW-191

Radiographic Results: **N/A**

Fillet Weld-Fracture Test (QW-180): **N/A** Length and Percent of Defects: **N/A**

Macro Examination (QW-184): **N/A** Fillet Legs Size (in.): **N/A** X **N/A** Concavity/Convexity (in.): **N/A**

Other Tests: **N/A**

Record Information

Film or Specimens Evaluated by: **Bruce Cormier** Company: **GRB Enterprises Ltd.**

Welding Test Conducted by: **Bruce Cormier**

Mechanical Tests Conducted by: **GRB Enterprises Ltd.** Laboratory Test no.: **N/A**

Welding Supervised by: **5Blue Process Representative: Joelle Dery-Brochu**

We certify that the statements in this record are correct and that the test coupons were prepared, welded and tested in accordance with the requirements of Section IX of the ASME Code.

Accredited Organization: GRB ENTERPRISES LTD. AOQP No: 7107(C) Expiry Date: **May 21 2015**

Certified by: **Bruce Cormier** _____ W.E.File: **E-00252** Date: **August 08, 2012**

PQ Card No. (When Issued): **18023** Performance Test Reference No.: **12-08-08-09**

Test Coupon ID No.: **Welder Name** Date Coupon is Retained To: **N/A**

Performance Qualification GRB Card No. 19051

Process(es)	GMAW / SMAW	Materials (P.No.)	P1
Filler Metal (F.No)	F6 / F4	Min. Outside Pipe Diameter	1" OD
Max Deposited Weld Metal	0.135" / 0.438"	Position(s) Qualified	ALL
Backing	WITHOUT / WITH / WITH	Backing Gas	NONE
Progression	DOWNHILL / UPHILL	#E00 252 Examiner File No.	

MAY 13, 2015 — P.Q. Expiry Date

Welding Examiner Signature

GRB Enterprises Ltd
Edmonton Alberta

AOQP 7107(C)

WELDER PERFORMANCE QUALIFICATION CARD

BRENT
Name
MARQUARDT W-20214
Name — ABSA File Number

This card is issued pursuant to the Safety Codes Act and the Pressure Welders Regulation. The performance qualification is in accordance with Section IX of the ASME BPV Code and subject to the limitations on the reverse side.

MAY 13, 2013 — Date of Test

B. Marquardt — Welder Signature

BRUCE CORMIER — Welding Examiner (Print/Type)

19051 — GRB Card No.

Performance Qualification GRB Card No. 19050

Process(es)	SMAW	Materials (P.No.)	P1
Filler Metal (F.No)	F3 / F4	Min. Outside Pipe Diameter	1" OD
Max Deposited Weld Metal	0.250" MAX. TO WELD	Position(s) Qualified	ALL
Backing	WITHOUT / WITH	Backing Gas	NONE
Progression	UPHILL	#E00 252 Examiner File No.	

MAY 13, 2015 — P.Q. Expiry Date

Welding Examiner Signature

GRB Enterprises Ltd
Edmonton Alberta

AOQP 7107(C)

WELDER PERFORMANCE QUALIFICATION CARD

BRENT
Name
MARQUARDT W-20214
Name — ABSA File Number

This card is issued pursuant to the Safety Codes Act and the Pressure Welders Regulation. The performance qualification is in accordance with Section IX of the ASME BPV Code and subject to the limitations on the reverse side.

MAY 13, 2013 — Date of Test

B. Marquardt — Welder Signature

BRUCE CORMIER — Welding Examiner (Print/Type)

19050 — GRB Card No.

GRB Enterprises Ltd
Edmonton Alberta

AOQP 7107(C)

WELDER PERFORMANCE QUALIFICATION CARD

BRENT
Name MARQUARDT W- 20214
Name ABSA File Number

This card is issued pursuant to the Safety Codes Act and the Pressure Welders Regulation. The performance qualification is in accordance with Section IX of the ASME BPV Code and subject to the limitations on the reverse side.

AUG 8, 2012 B Marquardt
Date of Test Welder Signature

BRUCE CORMIER 18023
Welding Examiner (Print/Type) GRB Card No.

Performance Qualification GRB Card No. 18023

Process(es)	GTAW	Materials (P.No.)	P1 THROUGH P8
Filler Metal (F.No)	F6	Min. Outside Pipe Diameter	1" OD
Max Deposited Weld Metal	MAX. TO WELD	Position(s) Qualified	ALL
Backing	WITHOUT - WITH	Backing Gas	WITH
Progression	UPHILL		#E00 252 Examiner File No.

AUG 8, 2014 P. Cormier
P.Q. Expiry Date Welding Examiner Signature

GRB Enterprises Ltd
Edmonton Alberta

AOQP 7107(C)

WELDER PERFORMANCE QUALIFICATION CARD

BRENT
Name MARQUARDT W- 20214
Name ABSA File Number

This card is issued pursuant to the Safety Codes Act and the Pressure Welders Regulation. The performance qualification is in accordance with Section IX of the ASME BPV Code and subject to the limitations on the reverse side.

AUG 8, 2012 B Marquardt
Date of Test Welder Signature

BRUCE CORMIER 18024
Welding Examiner (Print/Type) GRB Card No.

Performance Qualification GRB Card No. 18024

Process(es)	GMAW SMAW	Materials (P.No.)	P1 THROUGH P8
Filler Metal (F.No)	F6 F5	Min. Outside Pipe Diameter	1" OD
Max Deposited Weld Metal	0.375" MAX. TO WELD	Position(s) Qualified	F6: SP/F F5: FLAT
Backing	WITHOUT - WITH	Backing Gas	WITH NONE
Progression	N/A N/A		#E00 252 Examiner File No.

AUG 8, 2014 P. Cormier
P.Q. Expiry Date Welding Examiner Signature

Z

GRB Enterprises Ltd
Edmonton Alberta AOQP 7107(C)

WELDER PERFORMANCE QUALIFICATION CARD

Name: Corey
Name: Schanke W- 186.58
ABSA File Number

This card is issued pursuant to the Safety Codes Act and the Pressure Welders Regulation. The performance qualification is in accordance with Section IX of the ASME BPV Code and subject to the limitations on the reverse side.

April-15-2013
Date of Test

Welder Signature

G.R. Belhumeur
Welding Examiner (Print/Type)

18920
GRB Card No.

GRB Enterprises Ltd
Edmonton Alberta AOQP 7107(C)

WELDER PERFORMANCE QUALIFICATION CARD

Name: Corey
Name: Schanke W- 186.58
ABSA File Number

This card is issued pursuant to the Safety Codes Act and the Pressure Welders Regulation. The performance qualification is in accordance with Section IX of the ASME BPV Code and subject to the limitations on the reverse side.

April-15-2013
Date of Test

Welder Signature

G.R. Belhumeur
Welding Examiner (Print/Type)

18922
GRB Card No.

Performance Qualification GRB Card No. 18920

Process(es): GMAW/SMAW
Materials (P.No.): P1
Filler Metal (F.No): F6 F4
Min. Outside Pipe Diameter: 1"OD
Max Deposited Weld Metal: 0.1375" 0.186"
Position(s) Qualified: ALL
Backing: Without with
Backing Gas: N/A
Progression: Downhill uphill
#E00 022
Examiner File No.

April-15-2015
P.Q. Expiry Date

G.R. Belhumeur
Welding Examiner Signature

Performance Qualification GRB Card No. 18922

Process(es): SMAW
Materials (P.No.): P1
Filler Metal (F.No): F3 F4
Min. Outside Pipe Diameter: 1"OD
Max Deposited Weld Metal: 0.104" 8.0" MAX TO BE WELD
Position(s) Qualified: ALL
Backing: Without with with
Backing Gas: N/A
Progression: uphill uphill
#E00 022
Examiner File No.

April-15-2015
P.Q. Expiry Date

G.R. Belhumeur
Welding Examiner Signature

GRB ENTERPRISES LTD. 9712 - 54 Ave. EDMONTON ALBERTA T6E 0A9 2" sch 80

Exhibit 9.3A / AB-76 A Modified *WELDER QUALIFICATION RECORD (WQR)*

Welder's Name: **Corey Schonke** ABSA File No.: W-**18658** Stamp No.:

Identification of WPS followed by welder during welding of test coupon: 5B103 AW/PWHT W.P. Reg. # WP- **3146.2 (r0)**

Base material(s) welded: **SA 106 GR B** Thickness: **0.218"** ☒ Test Coupon ☐ Prod. Weld

Testing Variables and Qualification Limits

Welding Variables (QW-350)	Actual Values		Range Qualified	
Welding Process(es) Used:	GMAW	SMAW	GMAW	SMAW
Type of Welding (manual, semi-automatic) Used:	Semi-Automatic	Manual	Semi-Automatic	Manual
Base Metal P Number to P Number:	P1	P1	P1	P1
Plate ☐ Pipe ☒ enter diameter:	NPS 2	NPS 2	1" OD Min.	1" OD Min.
Backing (metal, weld metal, double weld etc.):	None / Weld	Weld Metal	Without / With	With
Filler Metal or Electrode Specification(s) SFA#:	5.18	5.1		
Filler Metal or Electrode Classification(s):	ER70S-6	E7018-1		
Filler Metal or Electrode F - number(s):	F6	F4	F6	F4
Filler Type (solid metal, or flux cored/powder) GTAW or PAW:	Solid	N/A	Solid	N/A
Consumable Insert for GTAW or PAW:	N/A	N/A	N/A	N/A
Deposit Thickness for each process, electrode type, etc. (in.):	0.125"	0.093"	0.1375"	0.186"
Process/Electrode 1: 3 layers minimum Yes ☐ No ☒	Process/Electrode 2: 3 layers minimum Yes ☐ No ☒			
Welding position (2G, 5G, 6G, 3F, etc.):	6G	6G	All	All
Progression (Uphill or Downhill):	Downhill	Uphill	Downhill	Uphill
Inert Gas backing for GTAW, PAW, GMAW:	N/A	N/A	N/A	N/A
Transfer Mode (spray/globular or pulse to short circuit):	Short Circuit	N/A	Short Circuit	N/A
GTAW Current Type/ Polarity (AC, DCEP, DCEN):	DCEP	DCEP	DCEP	DCEP

Results

Visual Examination of Fit-Up Root Gap: **1/8"** Tack Welds: **Bridge** Length: **0.5"** Number: **3**

Root Pass (Describe Discontinuity if Unacceptable): **OK**

Complete Weld (Describe Defects if Unacceptable): **OK**

Bend Test

☒ Transverse Root and Face QW-462.3a ☐ Longitudinal Root and Face QW-462.3b

☐ Pipe Bend Specimen, corrosion-resistant overlay QW-462.5c ☐ Plate Bend Specimen, corrosion-resistant overlay QW-462.5d

☐ Side Bend QW-462.2 ☐ Macro Test for Fusion QW-462.5b ☐ Macro Test for Fusion QW-462.5e

Bend Type	Result	Bend Type	Result	Bend Type	Result	Bend Type	Result
# 1 Root	Pass	# 3 Root	Pass				
# 2 Face	Pass	# 4 Face	Pass				

For alternative qualification of groove welds by radiography to QW-191

Radiographic Results: **N/A**

Fillet Weld-Fracture Test (QW-180): **N/A** Length and Percent of Defects: **N/A**

Macro Examination (QW-184): **N/A** Fillet Legs Size (in.): **N/A** X **N/A** Concavity/Convexity (in.): **N/A**

Other Tests: **N/A**

Record Information

Film or Specimens Evaluated by: **G.R.Belhumeur** Company: **GRB Enterprises Ltd.**

Welding Test Conducted by: **G.R.Belhumeur**

Mechanical Tests Conducted by: **GRB Enterprises Ltd.** Laboratory Test no.: **N/A**

Welding Supervised by: **5Blue Process Representative: Andrew Ngo**

We certify that the statements in this record are correct and that the test coupons were prepared, welded and tested in accordance with the requirements of Section IX of the ASME Code.

Accredited Organization: GRB ENTERPRISES LTD. AOQP No: 7107(C) Expiry Date: **May 21 2015**

Certified by: **Gerald R. Belhumeur** W.E.File: **E-00022** Date: **April 15, 2013**

PQ Card No. (When Issued): **18920** Performance Test Reference No.: **13-04-15-1**

Test Coupon ID No.: **Welder Name** Date Coupon is Retained To: **N/A**

GRB ENTERPRISES LTD. 9712 - 54 Ave. EDMONTON ALBERTA T6E 0A9 2.5" sch xxh

Exhibit 9.3A / AB-76 A Modified *WELDER QUALIFICATION RECORD (WQR)*

Welder's Name: **Corey Schonke** ABSA File No.: W- **18658** Stamp No.:

Identification of WPS followed by welder during welding of test coupon: 5B-102AW-PWHT W.P. Reg. # WP- **3146.2(r0)**

Base material(s) welded: **SA 106 GR B** Thickness: **0.552"** ☒ Test Coupon ☐ Prod. Weld

Testing Variables and Qualification Limits

Welding Variables (QW-350)	Actual Values		Range Qualified	
Welding Process(es) Used:	SMAW	SMAW	SMAW	SMAW
Type of Welding (manual, semi-automatic) Used:	Manual	Manual	Manual	Manual
Base Metal P Number to P Number:	P1	P1	P1	P1
Plate ☐ Pipe ☒ enter diameter:	NPS 2.5	NPS 2.5	1" OD Min.	1" OD Min.
Backing (metal, weld metal, double weld etc.):	None / Weld metal	Weld Metal	Without / With	With
Filler Metal or Electrode Specification(s) SFA#:	5.1	5.1		
Filler Metal or Electrode Classification(s):	E6010	E7018-1		
Filler Metal or Electrode F - number(s):	F3	F4	F3	F4
Filler Type (solid metal, or flux cored/powder) GTAW or PAW:	N/A	N/A	N/A	N/A
Consumable Insert for GTAW or PAW:	N/A	N/A	N/A	N/A
Deposit Thickness for each process, electrode type, etc. (in.):	0.052"	0.500"	0.104"	Max. to weld
Process/Electrode 1: 3 layers minimum Yes ☐ No ☒	Process/Electrode 2: 3 layers minimum Yes ☒ No ☐			
Welding position (2G, 5G, 6G, 3F, etc.):	6G	6G	All	All
Progression (Uphill or Downhill):	Uphill	Uphill	Uphill	Uphill
Inert Gas backing for GTAW, PAW, GMAW:	N/A	N/A	N/A	N/A
Transfer Mode (spray/globular or pulse to short circuit):	N/A	N/A	N/A	N/A
GTAW Current Type/ Polarity (AC, DCEP, DCEN):	DCEP	DCEP	DCEP	DCEP

Results

Visual Examination of Fit-Up Root Gap: **3/32"** Tack Welds: **Bridge** Length: **0.5"** Number: **3**

Root Pass (Describe Discontinuity if Unacceptable): **OK**

Complete Weld (Describe Defects if Unacceptable): **OK**

Bend Test

☐ Transverse Root and Face QW-462.3a ☐ Longitudinal Root and Face QW-462.3b

☐ Pipe Bend Specimen, corrosion-resistant overlay QW-462.5c ☐ Plate Bend Specimen, corrosion-resistant overlay QW-462.5d

☒ Side Bend QW-462.2 ☐ Macro Test for Fusion QW-462.5b ☐ Macro Test for Fusion QW-462.5e

Bend Type	Result	Bend Type	Result	Bend Type	Result	Bend Type	Result
# 1 Side	Pass	# 3 Side	Pass				
# 2 Side	Pass	# 4 Side	Pass				

For alternative qualification of groove welds by radiography to QW-191

Radiographic Results: **N/A**

Fillet Weld-Fracture Test (QW-180): **N/A** Length and Percent of Defects: **N/A**

Macro Examination (QW-184): **N/A** Fillet Legs Size (in.): **N/A** X **N/A** Concavity/Convexity (in.): **N/A**

Other Tests: **N/A**

Record Information

Film or Specimens Evaluated by: **G.R.Belhumeur** Company: **GRB Enterprises Ltd.**

Welding Test Conducted by: **G.R.Belhumeur**

Mechanical Tests Conducted by: **GRB Enterprises Ltd.** Laboratory Test no.: **N/A**

Welding Supervised by: **5Blue Process Representative: Andrew Ngo**

We certify that the statements in this record are correct and that the test coupons were prepared, welded and tested in accordance with the requirements of Section IX of the ASME Code.

Accredited Organization: GRB ENTERPRISES LTD. AOQP No: 7107(C) Expiry Date: **May 21 2015**

Certified by: **Gerald R. Belhumeur** W.E.File: **E-00022** Date: **April 15, 2013**

PQ Card No. (When Issued): **18922** Performance Test Reference No.: **13-04-15-3**

Test Coupon ID No.: **Welder Name** Date Coupon is Retained To: **N/A**

GRB ENTERPRISES LTD. 9712 - 54 Ave. EDMONTON ALBERTA T6E 0A9 2.5" sch xxh

Exhibit 9.3A / AB-76 A Modified ***WELDER QUALIFICATION RECORD (WQR)***

Welder's Name: **Corey Schonke** ABSA File No.: W- **18658** Stamp No.:

Identification of WPS followed by welder during welding of test coupon: 5B-102AW-PWHT W.P. Reg. # WP- **3146.2(r0)**

Base material(s) welded: **SA 106 GR B** Thickness: **0.552"** ☒ Test Coupon ☐ Prod. Weld

Testing Variables and Qualification Limits

Welding Variables (QW-350)	Actual Values		Range Qualified	
Welding Process(es) Used:	SMAW	SMAW	SMAW	SMAW
Type of Welding (manual, semi-automatic) Used:	Manual	Manual	Manual	Manual
Base Metal P Number to P Number:	P1	P1	P1	P1
Plate ☐ Pipe ☒ enter diameter:	NPS 2.5	NPS 2.5	1" OD Min.	1" OD Min.
Backing (metal, weld metal, double weld etc.):	None / Weld metal	Weld Metal	Without / With	With
Filler Metal or Electrode Specification(s) SFA#:	5.1	5.1		
Filler Metal or Electrode Classification(s):	E6010	E7018-1		
Filler Metal or Electrode F - number(s):	F3	F4	F3	F4
Filler Type (solid metal, or flux cored/powder) GTAW or PAW:	N/A	N/A	N/A	N/A
Consumable Insert for GTAW or PAW:	N/A	N/A	N/A	N/A
Deposit Thickness for each process, electrode type, etc. (in.):	0.052"	0.500"	0.104"	Max. to weld
Process/Electrode 1: 3 layers minimum Yes ☐ No ☒	Process/Electrode 2: 3 layers minimum Yes ☒ No ☐			
Welding position (2G, 5G, 6G, 3F, etc.):	6G	6G	All	All
Progression (Uphill or Downhill):	Uphill	Uphill	Uphill	Uphill
Inert Gas backing for GTAW, PAW, GMAW:	N/A	N/A	N/A	N/A
Transfer Mode (spray/globular or pulse to short circuit):	N/A	N/A	N/A	N/A
GTAW Current Type/ Polarity (AC, DCEP, DCEN):	DCEP	DCEP	DCEP	DCEP

Results

Visual Examination of Fit-Up Root Gap: **3/32"** Tack Welds: **Bridge** Length: **0.5"** Number: **3**

Root Pass (Describe Discontinuity if Unacceptable): **OK**

Complete Weld (Describe Defects if Unacceptable): **OK**

Bend Test

☐ Transverse Root and Face QW-462.3a ☐ Longitudinal Root and Face QW-462.3b

☐ Pipe Bend Specimen, corrosion-resistant overlay QW-462.5c ☐ Plate Bend Specimen, corrosion-resistant overlay QW-462.5d

☒ Side Bend QW-462.2 ☐ Macro Test for Fusion QW-462.5b ☐ Macro Test for Fusion QW-462.5e

Bend Type	Result	Bend Type	Result	Bend Type	Result	Bend Type	Result
# 1 Side	Pass	# 3 Side	Pass				
# 2 Side	Pass	# 4 Side	Pass				

For alternative qualification of groove welds by radiography to QW-191

Radiographic Results: **N/A**

Fillet Weld-Fracture Test (QW-180): **N/A** Length and Percent of Defects: **N/A**

Macro Examination (QW-184): **N/A** Fillet Legs Size (in.): **N/A** X **N/A** Concavity/Convexity (in.): **N/A**

Other Tests: **N/A**

Record Information

Film or Specimens Evaluated by: **G.R.Belhumeur** Company: **GRB Enterprises Ltd.**

Welding Test Conducted by: **G.R.Belhumeur**

Mechanical Tests Conducted by: **GRB Enterprises Ltd.** Laboratory Test no.: **N/A**

Welding Supervised by: **5Blue Process Representative: Andrew Ngo**

We certify that the statements in this record are correct and that the test coupons were prepared, welded and tested in accordance with the requirements of Section IX of the ASME Code.

Accredited Organization: GRB ENTERPRISES LTD. AOQP No: 7107(C) Expiry Date: **May 21 2015**

Certified by: **Gerald R. Belhumeur** W.E.File: **E-00022** Date: **April 15, 2013**

PQ Card No. (When Issued): **18922** Performance Test Reference No.: **13-04-15-3**

Test Coupon ID No.: **Welder Name** Date Coupon is Retained To: **N/A**

GRB ENTERPRISES LTD. 9712 - 54 Ave. EDMONTON ALBERTA T6E 0A9 2" sch 80

Exhibit 9.3A / AB-76 A Modified ***WELDER QUALIFICATION RECORD (WQR)***

Welder's Name: **Corey Schonke** ABSA File No.: W-**18658** Stamp No.:

Identification of WPS followed by welder during welding of test coupon: 5B103 AW/PWHT W.P. Reg. # WP- **3146.2 (r0)**

Base material(s) welded: **SA 106 GR B** Thickness: **0.218"** ☒ Test Coupon ☐ Prod. Weld

Testing Variables and Qualification Limits

Welding Variables (QW-350)	Actual Values		Range Qualified	
Welding Process(es) Used:	GMAW	SMAW	GMAW	SMAW
Type of Welding (manual, semi-automatic) Used:	Semi-Automatic	Manual	Semi-Automatic	Manual
Base Metal P Number to P Number:	P1	P1	P1	P1
Plate ☐ Pipe ☒ enter diameter:	NPS 2	NPS 2	1" OD Min.	1" OD Min.
Backing (metal, weld metal, double weld etc.):	None / Weld	Weld Metal	Without / With	With
Filler Metal or Electrode Specification(s) SFA#:	5.18	5.1		
Filler Metal or Electrode Classification(s):	ER70S-6	E7018-1		
Filler Metal or Electrode F - number(s):	F6	F4	F6	F4
Filler Type (solid metal, or flux cored/powder) GTAW or PAW:	Solid	N/A	Solid	N/A
Consumable Insert for GTAW or PAW:	N/A	N/A	N/A	N/A
Deposit Thickness for each process, electrode type, etc. (in.):	0.125"	0.093"	0.1375"	0.186"
Process/Electrode 1: 3 layers minimum Yes ☐ No ☒	Process/Electrode 2: 3 layers minimum Yes ☐ No ☒			
Welding position (2G, 5G, 6G, 3F, etc.):	6G	6G	All	All
Progression (Uphill or Downhill):	Downhill	Uphill	Downhill	Uphill
Inert Gas backing for GTAW, PAW, GMAW:	N/A	N/A	N/A	N/A
Transfer Mode (spray/globular or pulse to short circuit):	Short Circuit	N/A	Short Circuit	N/A
GTAW Current Type/ Polarity (AC, DCEP, DCEN):	DCEP	DCEP	DCEP	DCEP

Results

Visual Examination of Fit-Up Root Gap: **1/8"** Tack Welds: **Bridge** Length: **0.5"** Number: **3**

Root Pass (Describe Discontinuity if Unacceptable): **OK**

Complete Weld (Describe Defects if Unacceptable): **OK**

Bend Test

☒ Transverse Root and Face QW-462.3a ☐ Longitudinal Root and Face QW-462.3b

☐ Pipe Bend Specimen, corrosion-resistant overlay QW-462.5c ☐ Plate Bend Specimen, corrosion-resistant overlay QW-462.5d

☐ Side Bend QW-462.2 ☐ Macro Test for Fusion QW-462.5b ☐ Macro Test for Fusion QW-462.5e

Bend Type	Result	Bend Type	Result	Bend Type	Result	Bend Type	Result
# 1 Root	Pass	# 3 Root	Pass				
# 2 Face	Pass	# 4 Face	Pass				

For alternative qualification of groove welds by radiography to QW-191

Radiographic Results: **N/A**

Fillet Weld-Fracture Test (QW-180): **N/A** Length and Percent of Defects: **N/A**

Macro Examination (QW-184): **N/A** Fillet Legs Size (in.): **N/A** X **N/A** Concavity/Convexity (in.): **N/A**

Other Tests: **N/A**

Record Information

Film or Specimens Evaluated by: **G.R.Belhumeur** Company: **GRB Enterprises Ltd.**

Welding Test Conducted by: **G.R.Belhumeur**

Mechanical Tests Conducted by: **GRB Enterprises Ltd.** Laboratory Test no.: **N/A**

Welding Supervised by: **5Blue Process Representative: Andrew Ngo**

We certify that the statements in this record are correct and that the test coupons were prepared, welded and tested in accordance with the requirements of Section IX of the ASME Code.

Accredited Organization: GRB ENTERPRISES LTD. AOQP No: 7107(C) Expiry Date: **May 21 2015**

Certified by: **Gerald R. Belhumeur** W.E.File: **E-00022** Date: **April 15, 2013**

PQ Card No. (When Issued): **18920** Performance Test Reference No.: **13-04-15-1**

Test Coupon ID No.: **Welder Name** Date Coupon is Retained To: **N/A**

GRB Enterprises Ltd
Edmonton Alberta AOQP 7107(C)

WELDER PERFORMANCE QUALIFICATION CARD

Name W- [illegible]
ABSA File Number

This card is issued pursuant to the Safety Codes Act and the Pressure Welders Regulation. The performance qualification is in accordance with Section IX of the ASME BPV Code and subject to the limitations on the reverse side.

April-15-2015
Date of Test

Welder Signature

[illegible]
Welding Examiner (Print/Type)

18920
GRB Card No.

GRB Enterprises Ltd
Edmonton Alberta AOQP 7107(C)

WELDER PERFORMANCE QUALIFICATION CARD

Name W- [illegible]
ABSA File Number

This card is issued pursuant to the Safety Codes Act and the Pressure Welders Regulation. The performance qualification is in accordance with Section IX of the ASME BPV Code and subject to the limitations on the reverse side.

April-15-2015
Date of Test

Welder Signature

[illegible]
Welding Examiner (Print/Type)

18922
GRB Card No.

Performance Qualification GRB Card No. 18920

Process(es) GMAW/SMAW Materials (P.No.) P1

Filler Metal (F.No) F6 F4 Min. Outside Pipe Diameter 1"OD

Max Deposited Weld Metal 0.1375" 0.166" Position(s) Qualified ALL

Backing without with Backing Gas N/A

Progression Downhill uphill #E00 8.22 Examiner File No.

April-15-2015 [illegible]
P.Q. Expiry Date Welding Examiner Signature

Performance Qualification GRB Card No. 18922

Process(es) SMAW Materials (P.No.) P1

Filler Metal (F.No) F3 F4 Min. Outside Pipe Diameter 1"OD

Max Deposited Weld Metal 0.164" 8.0" MAX TO BE WELD Position(s) Qualified ALL

Backing without with Backing Gas N/A

Progression uphill uphill #E00 8.22 Examiner File No.

April-15-2015 [illegible]
P.Q. Expiry Date Welding Examiner Signature

B

GRB ENTERPRISES LTD. 9712 - 54 Ave. EDMONTON ALBERTA T6E 0A9 1/2" plate

Exhibit 9.3A / AB-76 A Modified ***WELDER QUALIFICATION RECORD (WQR)***

Welder's Name: **Jovan Painchaud** ABSA File No.: W- **29484** Stamp No.:

Identification of WPS followed by welder during welding of test coupon: **5B-106AW(r 1)** W.P. Reg. # WP- **3146.2**

Base material(s) welded: **SA 516 GR 70** Thickness: **0.500"** ☒ Test Coupon ☐ Prod. Weld

Testing Variables and Qualification Limits

Welding Variables (QW-350)	**Actual Values**		**Range Qualified**	
Welding Process(es) Used:		SAW		SAW
Type of Welding (manual, semi-automatic) Used:		Machine		Machine
Base Metal P Number to P Number:		P1		P1
Plate ☒ Pipe ☐ enter diameter:		N/A		2.875" OD Min.
Backing (metal, weld metal, double weld etc.):		Metal/Weld		With
Filler Metal or Electrode Specification(s) SFA#:		5.17		
Filler Metal or Electrode Classification(s):		EM14K		
Filler Metal or Electrode F - number(s):		F6		F6
Filler Type (solid metal, or flux cored/powder) GTAW or PAW:		Solid		N/A
Consumable Insert for GTAW or PAW:		N/A		N/A
Deposit Thickness for each process, electrode type, etc. (in.):		0.500"		Max. to weld
Process/Electrode 1: 3 layers minimum Yes ☒ No ☐	Process/Electrode 2: 3 layers minimum Yes ☐ No ☐			
Welding position (2G, 5G, 6G, 3F, etc.):		1G		Flat
Progression (Uphill or Downhill):		N/A		N/A
Inert Gas backing for GTAW, PAW, GMAW:		N/A		N/A
Transfer Mode (spray/globular or pulse to short circuit):		N/A		N/A
GTAW Current Type/ Polarity (AC, DCEP, DCEN):		DCEP		DCEP

Results

Visual Examination of Fit-Up Root Gap: **1/2"** Tack Welds: **Bridge** Length: **0.5"** Number: **4**

Root Pass (Describe Discontinuity if Unacceptable): **N/A. Metal Backing Bar**

Complete Weld (Describe Defects if Unacceptable): **OK**

Bend Test

☐ Transverse Root and Face QW-462.3a ☐ Longitudinal Root and Face QW-462.3b

☐ Pipe Bend Specimen, corrosion-resistant overlay QW-462.5c ☐ Plate Bend Specimen, corrosion-resistant overlay QW-462.5d

☒ Side Bend QW-462.2 ☐ Macro Test for Fusion QW-462.5b ☐ Macro Test for Fusion QW-462.5e

Bend Type	Result	Bend Type	Result	Bend Type	Result	Bend Type	Result
# 1 Side	Pass						
# 2 Side	Pass						

For alternative qualification of groove welds by radiography to QW-191

Radiographic Results: **N/A**

Fillet Weld-Fracture Test (QW-180): **N/A** Length and Percent of Defects: **N/A**

Macro Examination (QW-184): **N/A** Fillet Legs Size (in.): **N/A** X **N/A** Concavity/Convexity (in.): **N/A**

Other Tests: **N/A**

Record Information

Film or Specimens Evaluated by: **Bruce Cormier** Company: **GRB Enterprises Ltd.**

Welding Test Conducted by: **Bruce Cormier**

Mechanical Tests Conducted by: **GRB Enterprises Ltd.** Laboratory Test no.: **N/A**

Welding Supervised by: **5Blue Process Representative: Joelle Dery-Brochu**

We certify that the statements in this record are correct and that the test coupons were prepared, welded and tested in accordance with the requirements of Section IX of the ASME Code.

Accredited Organization: GRB ENTERPRISES LTD. AOQP No: 7107(C) Expiry Date: **May 21 2015**

Certified by: **Bruce Cormier** W.E.File: **E-00252** Date: **December 17, 2013**

PQ Card No. (When Issued): **20003** Performance Test Reference No.: **12-12-17-05**

Test Coupon ID No.: **Welder Name** Date Coupon is Retained To: **N/A**

GRB ENTERPRISES LTD. 9712 - 54 Ave. EDMONTON ALBERTA T6E 0A9 1/2" plate

Exhibit 9.3A / AB-76 A Modified ***WELDER QUALIFICATION RECORD (WQR)***

Welder's Name: **Jovan Painchaud** ABSA File No.: W- **29484** Stamp No.:

Identification of WPS followed by welder during welding of test coupon: **5B-110(r 0)** W.P. Reg. # WP- **3146.2**

Base material(s) welded: **SA 516 GR 70** Thickness: **0.500"** ☒ Test Coupon ☐ Prod. Weld

Testing Variables and Qualification Limits

Welding Variables (QW-350)	**Actual Values**		**Range Qualified**	
Welding Process(es) Used:		SAW		SAW
Type of Welding (manual, semi-automatic) Used:		Machine		Machine
Base Metal P Number to P Number:		P1		P1through P8
Plate ☒ Pipe ☐ enter diameter:		N/A		2.875" OD Min.
Backing (metal, weld metal, double weld etc.):		Metal/Weld		With
Filler Metal or Electrode Specification(s) SFA#:		5.9		
Filler Metal or Electrode Classification(s):		ER316L		
Filler Metal or Electrode F - number(s):		F6		F6
Filler Type (solid metal, or flux cored/powder) GTAW or PAW:		Solid		N/A
Consumable Insert for GTAW or PAW:		N/A		N/A
Deposit Thickness for each process, electrode type, etc. (in.):		0.500"		Max. to weld
Process/Electrode 1: 3 layers minimum Yes ☒ No ☐	Process/Electrode 2: 3 layers minimum Yes ☐ No ☐			
Welding position (2G, 5G, 6G, 3F, etc.):		1G		Flat
Progression (Uphill or Downhill):		N/A		N/A
Inert Gas backing for GTAW, PAW, GMAW:		N/A		N/A
Transfer Mode (spray/globular or pulse to short circuit):		N/A		N/A
GTAW Current Type/ Polarity (AC, DCEP, DCEN):		DCEP		DCEP

Results

Visual Examination of Fit-Up Root Gap: **1/2"** Tack Welds: **Bridge** Length: **0.5"** Number: **4**

Root Pass (Describe Discontinuity if Unacceptable): **N/A. Metal Backing Bar**

Complete Weld (Describe Defects if Unacceptable): **OK**

Bend Test

☐ Transverse Root and Face QW-462.3a ☐ Longitudinal Root and Face QW-462.3b

☐ Pipe Bend Specimen, corrosion-resistant overlay QW-462.5c ☐ Plate Bend Specimen, corrosion-resistant overlay QW-462.5d

☒ Side Bend QW-462.2 ☐ Macro Test for Fusion QW-462.5b ☐ Macro Test for Fusion QW-462.5e

Bend Type	Result	Bend Type	Result	Bend Type	Result	Bend Type	Result
# 1 Side	Pass						
# 2 Side	Pass						

For alternative qualification of groove welds by radiography to QW-191

Radiographic Results: **N/A**

Fillet Weld-Fracture Test (QW-180): **N/A** Length and Percent of Defects: **N/A**

Macro Examination (QW-184): **N/A** Fillet Legs Size (in.): **N/A** X **N/A** Concavity/Convexity (in.): **N/A**

Other Tests: **N/A**

Record Information

Film or Specimens Evaluated by: **Bruce Cormier** Company: **GRB Enterprises Ltd.**

Welding Test Conducted by: **Bruce Cormier**

Mechanical Tests Conducted by: **GRB Enterprises Ltd.** Laboratory Test no.: **N/A**

Welding Supervised by: **5Blue Process Representative: Joelle Dery-Brochu**

We certify that the statements in this record are correct and that the test coupons were prepared, welded and tested in accordance with the requirements of Section IX of the ASME Code.

Accredited Organization: GRB ENTERPRISES LTD. AOQP No: 7107(C) Expiry Date: **May 21 2015**

Certified by: **Bruce Cormier** W.E.File: **E-00252** Date: **December 17, 2013**

PQ Card No. (When Issued): **20004** Performance Test Reference No.: **12-12-17-06**

Test Coupon ID No.: **Welder Name** Date Coupon is Retained To: **N/A**

GRB Enterprises Ltd
Edmonton Alberta

AOQP 7107(C)

WELDER PERFORMANCE QUALIFICATION CARD

JONAN
Name PAINCHAUD W-29484
Name ABSA File Number

This card is issued pursuant to the Safety Codes Act and the Pressure Welders Regulation. The performance qualification is in accordance with Section IX of the ASME BPV Code and subject to the limitations on the reverse side.

DEC 17, 2013
Date of Test

Welder Signature

BRUCE CORMIER 20004
Welding Examiner (Print/Type) GRB Card No.

GRB Enterprises Ltd
Edmonton Alberta

AOQP 7107(C)

WELDER PERFORMANCE QUALIFICATION CARD

JONAN
Name PAINCHAUD W-29484
Name ABSA File Number

This card is issued pursuant to the Safety Codes Act and the Pressure Welders Regulation. The performance qualification is in accordance with Section IX of the ASME BPV Code and subject to the limitations on the reverse side.

DEC 17, 2013
Date of Test

Welder Signature

BRUCE CORMIER 20003
Welding Examiner (Print/Type) GRB Card No.

Performance Qualification GRB Card No. 20004

Process(es)	SAW	Materials (P.No.)	P1 THROUGH P8
Filler Metal (F.No)	F6	Min. Outside Pipe Diameter	2.875"
Max Deposited Weld Metal	MAX. TO WELD	Position(s) Qualified	FLAT
Backing	WITH	Backing Gas	NONE
Progression	N/A	#E00 252 Examiner File No.	

DEC 17, 2015 — Welding Examiner Signature
P.Q. Expiry Date

Performance Qualification GRB Card No. 20003

Process(es)	SAW	Materials (P.No.)	P1
Filler Metal (F.No)	F6	Min. Outside Pipe Diameter	2.875"
Max Deposited Weld Metal	MAX. TO WELD	Position(s) Qualified	FLAT
Backing	WITH	Backing Gas	NONE
Progression	N/A	#E00 252 Examiner File No.	

DEC 17, 2015 — Welding Examiner Signature
P.Q. Expiry Date

GRB ENTERPRISES LTD. 9712 - 54 Ave. EDMONTON ALBERTA T6E 0A9 2.5" sch xxh

Exhibit 9.3A / AB-76 A Modified *WELDER QUALIFICATION RECORD (WQR)*

Welder's Name: **Jovan Laurent Painchaud** ABSA File No.: W- **29484** Stamp No.:

Identification of WPS followed by welder during welding of test coupon: **5B-102AW-PWHT** W.P. Reg. # WP- **3146.2(r0)**

Base material(s) welded: **SA 106 GR B** Thickness: **0.552"** ☒ Test Coupon ☐ Prod. Weld

Testing Variables and Qualification Limits

Welding Variables (QW-350)	Actual Values		Range Qualified	
Welding Process(es) Used:	SMAW	SMAW	SMAW	SMAW
Type of Welding (manual, semi-automatic) Used:	Manual	Manual	Manual	Manual
Base Metal P Number to P Number:	P1	P1	P1	P1
Plate ☐ Pipe ☒ enter diameter:	NPS 2.5	NPS 2.5	1" OD Min.	1" OD Min.
Backing (metal, weld metal, double weld etc.):	None / Weld metal	Weld Metal	Without / With	With
Filler Metal or Electrode Specification(s) SFA#:	5.1	5.1		
Filler Metal or Electrode Classification(s):	E6010	E7018-1		
Filler Metal or Electrode F - number(s):	F3	F4	F3	F4
Filler Type (solid metal, or flux cored/powder) GTAW or PAW:	N/A	N/A	N/A	N/A
Consumable Insert for GTAW or PAW:	N/A	N/A	N/A	N/A
Deposit Thickness for each process, electrode type, etc. (in.):	0.052"	0.500"	0.104"	Max. to weld
Process/Electrode 1: 3 layers minimum Yes ☐ No ☒	Process/Electrode 2: 3 layers minimum Yes ☒ No ☐			
Welding position (2G, 5G, 6G, 3F, etc.):	6G	6G	All	All
Progression (Uphill or Downhill):	Uphill	Uphill	Uphill	Uphill
Inert Gas backing for GTAW, PAW, GMAW:	N/A	N/A	N/A	N/A
Transfer Mode (spray/globular or pulse to short circuit):	N/A	N/A	N/A	N/A
GTAW Current Type/ Polarity (AC, DCEP, DCEN):	DCEP	DCEP	DCEP	DCEP

Results

Visual Examination of Fit-Up Root Gap: **3/32"** Tack Welds: **Bridge** Length: **0.5"** Number: **3**

Root Pass (Describe Discontinuity if Unacceptable): **OK**

Complete Weld (Describe Defects if Unacceptable): **OK**

Bend Test

☐ Transverse Root and Face QW-462.3a ☐ Longitudinal Root and Face QW-462.3b

☐ Pipe Bend Specimen, corrosion-resistant overlay QW-462.5c ☐ Plate Bend Specimen, corrosion-resistant overlay QW-462.5d

☒ Side Bend QW-462.2 ☐ Macro Test for Fusion QW-462.5b ☐ Macro Test for Fusion QW-462.5e

Bend Type	Result	Bend Type	Result	Bend Type	Result	Bend Type	Result
# 1 Side	Pass	# 3 Side	Pass				
# 2 Side	Pass	# 4 Side	Pass				

For alternative qualification of groove welds by radiography to QW-191

Radiographic Results: **N/A**

Fillet Weld-Fracture Test (QW-180): **N/A** Length and Percent of Defects: **N/A**

Macro Examination (QW-184): **N/A** Fillet Legs Size (in.): **N/A** X **N/A** Concavity/Convexity (in.): **N/A**

Other Tests: **N/A**

Record Information

Film or Specimens Evaluated by: **G.R.Belhumeur** Company: **GRB Enterprises Ltd.**

Welding Test Conducted by: **G.R.Belhumeur**

Mechanical Tests Conducted by: **GRB Enterprises Ltd.** Laboratory Test no.: **N/A**

Welding Supervised by: **5Blue Process Representative: Andrew Ngo**

We certify that the statements in this record are correct and that the test coupons were prepared, welded and tested in accordance with the requirements of Section IX of the ASME Code.

Accredited Organization: GRB ENTERPRISES LTD. AOQP No: 7107(C) Expiry Date: **May 21 2015**

Certified by: **Gerald R. Belhumeur** W.E.File: **E-00022** Date: **March 05, 2013**

PQ Card No. (When Issued): **18733** Performance Test Reference No.: **13-03-05-3**

Test Coupon ID No.: **Welder Name** Date Coupon is Retained To: **N/A**

GRB ENTERPRISES LTD. 9712 - 54 Ave. EDMONTON ALBERTA T6E 0A9 2" sch 80

Exhibit 9.3A / AB-76 A Modified *WELDER QUALIFICATION RECORD (WQR)*

Welder's Name: **Jovan Laurent Painchaud** ABSA File No.: W-**29484** Stamp No.:

Identification of WPS followed by welder during welding of test coupon: **5B103 AW/PWHT** W.P. Reg. # WP- **3146.2 (r0)**

Base material(s) welded: **SA 106 GR B** Thickness: **0.218"** ☒ Test Coupon ☐ Prod. Weld

Testing Variables and Qualification Limits

Welding Variables (QW-350)	Actual Values		Range Qualified	
Welding Process(es) Used:	GMAW	SMAW	GMAW	SMAW
Type of Welding (manual, semi-automatic) Used:	Semi-Automatic	Manual	Semi-Automatic	Manual
Base Metal P Number to P Number:	P1	P1	P1	P1
Plate ☐ Pipe ☒ enter diameter:	NPS 2	NPS 2	1" OD Min.	1" OD Min.
Backing (metal, weld metal, double weld etc.):	None / Weld	Weld Metal	Without / With	With
Filler Metal or Electrode Specification(s) SFA#:	5.18	5.1		
Filler Metal or Electrode Classification(s):	ER70S-6	E7018-1		
Filler Metal or Electrode F - number(s):	F6	F4	F6	F4
Filler Type (solid metal, or flux cored/powder) GTAW or PAW:	Solid	N/A	Solid	N/A
Consumable Insert for GTAW or PAW:	N/A	N/A	N/A	N/A
Deposit Thickness for each process, electrode type, etc. (in.):	0.125"	0.093"	0.1375"	0.186"
Process/Electrode 1: 3 layers minimum Yes ☐ No ☒	Process/Electrode 2: 3 layers minimum Yes ☐ No ☒			
Welding position (2G, 5G, 6G, 3F, etc.):	6G	6G	All	All
Progression (Uphill or Downhill):	Downhill	Uphill	Downhill	Uphill
Inert Gas backing for GTAW, PAW, GMAW:	N/A	N/A	N/A	N/A
Transfer Mode (spray/globular or pulse to short circuit):	Short Circuit	N/A	Short Circuit	N/A
GTAW Current Type/ Polarity (AC, DCEP, DCEN):	DCEP	DCEP	DCEP	DCEP

Results

Visual Examination of Fit-Up Root Gap: **1/8"** Tack Welds: **Bridge** Length: **0.5"** Number: **3**

Root Pass (Describe Discontinuity if Unacceptable): **OK**

Complete Weld (Describe Defects if Unacceptable): **OK**

Bend Test

☒ Transverse Root and Face QW-462.3a ☐ Longitudinal Root and Face QW-462.3b

☐ Pipe Bend Specimen, corrosion-resistant overlay QW-462.5c ☐ Plate Bend Specimen, corrosion-resistant overlay QW-462.5d

☐ Side Bend QW-462.2 ☐ Macro Test for Fusion QW-462.5b ☐ Macro Test for Fusion QW-462.5e

Bend Type	Result	Bend Type	Result	Bend Type	Result	Bend Type	Result
# 1 Root	Pass	# 3 Root	Pass				
# 2 Face	Pass	# 4 Face	Pass				

For alternative qualification of groove welds by radiography to QW-191

Radiographic Results: **N/A**

Fillet Weld-Fracture Test (QW-180): **N/A** Length and Percent of Defects: **N/A**

Macro Examination (QW-184): **N/A** Fillet Legs Size (in.): **N/A** X **N/A** Concavity/Convexity (in.): **N/A**

Other Tests: **N/A**

Record Information

Film or Specimens Evaluated by: **G.R.Belhumeur** Company: **GRB Enterprises Ltd.**

Welding Test Conducted by: **G.R.Belhumeur**

Mechanical Tests Conducted by: **GRB Enterprises Ltd.** Laboratory Test no.: **N/A**

Welding Supervised by: **5Blue Process Representative: Andrew Ngo**

We certify that the statements in this record are correct and that the test coupons were prepared, welded and tested in accordance with the requirements of Section IX of the ASME Code.

Accredited Organization: GRB ENTERPRISES LTD. AOQP No: 7107(C) Expiry Date: **May 21 2015**

Certified by: **Gerald R. Belhumeur** W.E.File: **E-00022** Date: **March 05, 2013**

PQ Card No. (When Issued): **18732** Performance Test Reference No.: **13-03-05-2**

Test Coupon ID No.: **Welder Name** Date Coupon is Retained To: **N/A**

GRB ENTERPRISES LTD. 9712 - 54 Ave. EDMONTON ALBERTA T6E 0A9 1/2" plate

Exhibit 9.3A / AB-76 A Modified *WELDER QUALIFICATION RECORD (WQR)*

Welder's Name: **Jovan Painchaud** ABSA File No.: W- **29484** Stamp No.:

Identification of WPS followed by welder during welding of test coupon: **5B-106AW(r 1)** W.P. Reg. # WP- **3146.2**

Base material(s) welded: **SA 516 GR 70** Thickness: **0.500"** ☒ Test Coupon ☐ Prod. Weld

Testing Variables and Qualification Limits

Welding Variables (QW-350)	Actual Values		Range Qualified	
Welding Process(es) Used:		SAW		SAW
Type of Welding (manual, semi-automatic) Used:		Machine		Machine
Base Metal P Number to P Number:		P1		P1
Plate ☒ Pipe ☐ enter diameter:		N/A		2.875" OD Min.
Backing (metal, weld metal, double weld etc.):		Metal/Weld		With
Filler Metal or Electrode Specification(s) SFA#:		5.17		
Filler Metal or Electrode Classification(s):		EM14K		
Filler Metal or Electrode F - number(s):		F6		F6
Filler Type (solid metal, or flux cored/powder) GTAW or PAW:		Solid		N/A
Consumable Insert for GTAW or PAW:		N/A		N/A
Deposit Thickness for each process, electrode type, etc. (in.):		0.500"		Max. to weld
Process/Electrode 1: 3 layers minimum Yes ☒ No ☐	Process/Electrode 2: 3 layers minimum Yes ☐ No ☐			
Welding position (2G, 5G, 6G, 3F, etc.):		1G		Flat
Progression (Uphill or Downhill):		N/A		N/A
Inert Gas backing for GTAW, PAW, GMAW:		N/A		N/A
Transfer Mode (spray/globular or pulse to short circuit):		N/A		N/A
GTAW Current Type/ Polarity (AC, DCEP, DCEN):		DCEP		DCEP

Results

Visual Examination of Fit-Up Root Gap: **1/2"** Tack Welds: **Bridge** Length: **0.5"** Number: **4**

Root Pass (Describe Discontinuity if Unacceptable): **N/A. Metal Backing Bar**

Complete Weld (Describe Defects if Unacceptable): **OK**

Bend Test

☐ Transverse Root and Face QW-462.3a ☐ Longitudinal Root and Face QW-462.3b

☐ Pipe Bend Specimen, corrosion-resistant overlay QW-462.5c ☐ Plate Bend Specimen, corrosion-resistant overlay QW-462.5d

☒ Side Bend QW-462.2 ☐ Macro Test for Fusion QW-462.5b ☐ Macro Test for Fusion QW-462.5e

Bend Type	Result	Bend Type	Result	Bend Type	Result	Bend Type	Result
# 1 Side	Pass						
# 2 Side	Pass						

For alternative qualification of groove welds by radiography to QW-191

Radiographic Results: **N/A**

Fillet Weld-Fracture Test (QW-180): **N/A** Length and Percent of Defects: **N/A**

Macro Examination (QW-184): **N/A** Fillet Legs Size (in.): **N/A** X **N/A** Concavity/Convexity (in.): **N/A**

Other Tests: **N/A**

Record Information

Film or Specimens Evaluated by: **Bruce Cormier** Company: **GRB Enterprises Ltd.**

Welding Test Conducted by: **Bruce Cormier**

Mechanical Tests Conducted by: **GRB Enterprises Ltd.** Laboratory Test no.: **N/A**

Welding Supervised by: **5Blue Process Representative: Joelle Dery-Brochu**

We certify that the statements in this record are correct and that the test coupons were prepared, welded and tested in accordance with the requirements of Section IX of the ASME Code.

Accredited Organization: GRB ENTERPRISES LTD. AOQP No: 7107(C) Expiry Date: **May 21 2015**

Certified by: **Bruce Cormier** W.E.File: **E-00252** Date: **December 17, 2013**

PQ Card No. (When Issued): **20003** Performance Test Reference No.: **12-12-17-05**

Test Coupon ID No.: **Welder Name** Date Coupon is Retained To: **N/A**

GRB ENTERPRISES LTD. 9712 - 54 Ave. EDMONTON ALBERTA T6E 0A9 2.5" sch xxh

Exhibit 9.3A / AB-76 A Modified *WELDER QUALIFICATION RECORD (WQR)*

Welder's Name: Jovan Painchaud ABSA File No.: W- 29484 Stamp No.:

Identification of WPS followed by welder during welding of test coupon: 5B-108 (rev 1) W.P. Reg. # WP- 3146.2

Base material(s) welded: SA 106 GR B Thickness: 0.552" ☒ Test Coupon ☐ Prod. Weld

Testing Variables and Qualification Limits

Welding Variables (QW-350)	Actual Values		Range Qualified	
Welding Process(es) Used:	GMAW	SMAW	GMAW	SMAW
Type of Welding (manual, semi-automatic) Used:	Semi-Automatic	Manual	Semi-Automatic	Manual
Base Metal P Number to P Number:	P1	P1	P1through P8	P1 through P8
Plate ☐ Pipe ☒ enter diameter:	NPS 2.5	NPS 2.5	1" OD Min.	1" OD Min.
Backing (metal, weld metal, double weld etc.):	None / Weld	Weld Metal	Without / With	With
Filler Metal or Electrode Specification(s) SFA#:	5.9	5.4		
Filler Metal or Electrode Classification(s):	ER316SI	E316L-16		
Filler Metal or Electrode F - number(s):	F6	F5	F6	F5
Filler Type (solid metal, or flux cored/powder) GTAW or PAW:	Solid	N/A	Solid	N/A
Consumable Insert for GTAW or PAW:	N/A	N/A	N/A	N/A
Deposit Thickness for each process, electrode type, etc. (in.):	0.125"	0.427"	0.1375"	0.854"
Process/Electrode 1: 3 layers minimum Yes ☐ No ☒	Process/Electrode 2: 3 layers minimum Yes ☐ No ☒			
Welding position (2G, 5G, 6G, 3F, etc.):	SP*	1G	SP/Flat	Flat
Progression (Uphill or Downhill):	N/A	N/A	N/A	N/A
Inert Gas backing for GTAW, PAW, GMAW:	N/A	N/A	N/A	N/A
Transfer Mode (spray/globular or pulse to short circuit):	Short Circuit	N/A	Short Circuit	N/A
GTAW Current Type/ Polarity (AC, DCEP, DCEN):	DCEP	DCEP	DCEP	DCEP

Results

Visual Examination of Fit-Up Root Gap: 1/8" Tack Welds: Bridge Length: 0.5" Number: 3

Root Pass (Describe Discontinuity if Unacceptable): OK

Complete Weld (Describe Defects if Unacceptable): OK

Bend Test

☐ Transverse Root and Face QW-462.3a ☐ Longitudinal Root and Face QW-462.3b

☐ Pipe Bend Specimen, corrosion-resistant overlay QW-462.5c ☐ Plate Bend Specimen, corrosion-resistant overlay QW-462.5d

☒ Side Bend QW-462.2 ☐ Macro Test for Fusion QW-462.5b ☐ Macro Test for Fusion QW-462.5e

Bend Type	Result	Bend Type	Result	Bend Type	Result	Bend Type	Result
# 1 Side	Pass						
# 2 Side	Pass						

For alternative qualification of groove welds by radiography to QW-191

Radiographic Results: N/A

Fillet Weld-Fracture Test (QW-180): N/A Length and Percent of Defects: N/A

Macro Examination (QW-184): N/A Fillet Legs Size (in.): N/A X N/A Concavity/Convexity (in.): N/A

Other Tests: **Applicable to WPS 5B-107(rev 0) Special Position 60 degrees from TDC.**

Record Information

Film or Specimens Evaluated by: Bruce Cormier Company: GRB Enterprises Ltd.

Welding Test Conducted by: Bruce Cormier

Mechanical Tests Conducted by: GRB Enterprises Ltd. Laboratory Test no.: N/A

Welding Supervised by: 5Blue Process Representative: Andrew Ngo

We certify that the statements in this record are correct and that the test coupons were prepared, welded and tested in accordance with the requirements of Section IX of the ASME Code.

Accredited Organization: GRB ENTERPRISES LTD. AQQP No: 7107(C) Expiry Date: May 21 2015

Certified by: Bruce Cormier _____ W.E.File: E-00252 Date: April 18, 2012

PQ Card No. (When Issued): 17685 Performance Test Reference No.: 12-04-18-06

Test Coupon ID No.: Welder Name Date Coupon is Retained To: N/A

GRB ENTERPRISES LTD. 9712 - 54 Ave. EDMONTON ALBERTA T6E 0A9 1/2" plate

Exhibit 9.3A / AB-76 A Modified *WELDER QUALIFICATION RECORD (WQR)*

Welder's Name: **Jovan Painchaud** ABSA File No.: W- **29484** Stamp No.:

Identification of WPS followed by welder during welding of test coupon: **5B-110(r 0)** W.P. Reg. # WP- **3146.2**

Base material(s) welded: **SA 516 GR 70** Thickness: **0.500"** ☒ Test Coupon ☐ Prod. Weld

Testing Variables and Qualification Limits

Welding Variables (QW-350)	Actual Values		Range Qualified	
Welding Process(es) Used:		SAW		SAW
Type of Welding (manual, semi-automatic) Used:		Machine		Machine
Base Metal P Number to P Number:		P1		P1through P8
Plate ☒ Pipe ☐ enter diameter:		N/A		2.875" OD Min.
Backing (metal, weld metal, double weld etc.):		Metal/Weld		With
Filler Metal or Electrode Specification(s) SFA#:		5.9		
Filler Metal or Electrode Classification(s):		ER316L		
Filler Metal or Electrode F - number(s):		F6		F6
Filler Type (solid metal, or flux cored/powder) GTAW or PAW:		Solid		N/A
Consumable Insert for GTAW or PAW:		N/A		N/A
Deposit Thickness for each process, electrode type, etc. (In.):		0.500"		Max. to weld

Process/Electrode 1: 3 layers minimum Yes ☒ No ☐ Process/Electrode 2: 3 layers minimum Yes ☐ No ☐

Welding position (2G, 5G, 6G, 3F, etc.):	1G		Flat
Progression (Uphill or Downhill):	N/A		N/A
Inert Gas backing for GTAW, PAW, GMAW:	N/A		N/A
Transfer Mode (spray/globular or pulse to short circuit):	N/A		N/A
GTAW Current Type/ Polarity (AC, DCEP, DCEN):	DCEP		DCEP

Results

Visual Examination of Fit-Up Root Gap: **1/2"** Tack Welds: **Bridge** Length: **0.5"** Number: **4**

Root Pass (Describe Discontinuity if Unacceptable): **N/A. Metal Backing Bar**

Complete Weld (Describe Defects if Unacceptable): **OK**

Bend Test

☐ Transverse Root and Face QW-462.3a ☐ Longitudinal Root and Face QW-462.3b

☐ Pipe Bend Specimen, corrosion-resistant overlay QW-462.5c ☐ Plate Bend Specimen, corrosion-resistant overlay QW-462.5d

☒ Side Bend QW-462.2 ☐ Macro Test for Fusion QW-462.5b ☐ Macro Test for Fusion QW-462.5e

Bend Type	Result	Bend Type	Result	Bend Type	Result	Bend Type	Result
# 1 Side	Pass						
# 2 Side	Pass						

For alternative qualification of groove welds by radiography to QW-191

Radiographic Results: **N/A**

Fillet Weld-Fracture Test (QW-180): **N/A** Length and Percent of Defects: **N/A**

Macro Examination (QW-184): **N/A** Fillet Legs Size (in.): **N/A** X **N/A** Concavity/Convexity (in.): **N/A**

Other Tests: **N/A**

Record Information

Film or Specimens Evaluated by: **Bruce Cormier** Company: **GRB Enterprises Ltd.**

Welding Test Conducted by: **Bruce Cormier**

Mechanical Tests Conducted by: **GRB Enterprises Ltd.** Laboratory Test no.: **N/A**

Welding Supervised by: **5Blue Process Representative: Joelle Dery-Brochu**

We certify that the statements in this record are correct and that the test coupons were prepared, welded and tested in accordance with the requirements of Section IX of the ASME Code.

Accredited Organization: GRB ENTERPRISES LTD. AOQP No: 7107(C) Expiry Date: **May 21 2015**

Certified by: **Bruce Cormier** W.E.File: **E-00252** Date: **December 17, 2013**

PQ Card No. (When Issued): **20004** Performance Test Reference No.: **12-12-17-06**

Test Coupon ID No.: **Welder Name** Date Coupon is Retained To: **N/A**

GRB Enterprises Ltd
Edmonton Alberta

AOQP 7107(C)

WELDER PERFORMANCE QUALIFICATION CARD

JONAH

Name PAINCHAUD W- 29484

Name ABSA File Number

This card is issued pursuant to the Safety Codes Act and the Pressure Welders Regulation. The performance qualification is in accordance with Section IX of the ASME BPV Code and subject to the limitations on the reverse side.

DEC 17, 2013

Date of Test

Welder Signature

BRUCE CORMIER 20004

Welding Examiner (Print/Type) GRB Card No.

GRB Enterprises Ltd
Edmonton Alberta

AOQP 7107(C)

WELDER PERFORMANCE QUALIFICATION CARD

JONAH

Name PAINCHAUD W- 29484

Name ABSA File Number

This card is issued pursuant to the Safety Codes Act and the Pressure Welders Regulation. The performance qualification is in accordance with Section IX of the ASME BPV Code and subject to the limitations on the reverse side.

DEC 17, 2013

Date of Test

Welder Signature

BRUCE CORMIER 20003

Welding Examiner (Print/Type) GRB Card No.

Performance Qualification GRB Card No. 20004

Process(es)	SAW	Materials (P.No.)	P1 THROUGH P8
Filler Metal (F.No)	F6	Min. Outside Pipe Diameter	2.875"
Max Deposited Weld Metal	MAX. TO WELD	Position(s) Qualified	FLAT
Backing	WITH	Backing Gas	NONE
Progression	N/A	#E00	252

Examiner File No.

DEC 17, 2015

P.Q. Expiry Date

Welding Examiner Signature

Performance Qualification GRB Card No. 20003

Process(es)	SAW	Materials (P.No.)	P1
Filler Metal (F.No)	F6	Min. Outside Pipe Diameter	2.875"
Max Deposited Weld Metal	MAX. TO WELD	Position(s) Qualified	FLAT
Backing	WITH	Backing Gas	NONE
Progression	N/A	#E00	252

Examiner File No.

DEC 17, 2015

P.Q. Expiry Date

Welding Examiner Signature

Performance Qualification GRB Card No. 18732

Process(es) GMAW/SMAW Materials (P.No.) P1

Filler Metal (F.No) F6 F4 Min. Outside Pipe Diameter 1" OD

Max Deposited Weld Metal 0.1375" 0.186" Position(s) Qualified ALL

Backing Without With Backing Gas N/A

Progression Downhill Uphill #E00 022 Examiner File No.

MARCH-05/15 J.R. Bellehumeur

P.Q. Expiry Date Welding Examiner Signature

GRB Enterprises Ltd
Edmonton Alberta AOQP 7107(C)

WELDER PERFORMANCE QUALIFICATION CARD

Name JOVAN LAURENT PAINCHAUD W-29484

Name ABSA File Number

This card is issued pursuant to the Safety Codes Act and the Pressure Welders Regulation. The performance qualification is in accordance with Section IX of the ASME BPV Code and subject to the limitations on the reverse side.

MARCH-05-13 J. Painchaud

Date of Test Welder Signature

G.R. BELLHUMEUR 18732

Welding Examiner (Print/Type) GRB Card No.

Performance Qualification GRB Card No. 17685

Process(es) GMAW SMAW P1 THROUGH

Materials (P.No.) P8

Filler Metal (F.No) F6 F5 Min. Outside Pipe Diameter 1" OD

Max Deposited Weld Metal 0.057" MAX. TO WELD Position(s) Qualified F6: SP/FLAT

Backing WITHOUT-WITH WITH Backing Gas F5: FLAT NONE

Progression N/A N/A #E00 252 Examiner File No.

APRIL 18, 2014 [signature]

P.Q. Expiry Date Welding Examiner Signature

GRB Enterprises Ltd
Edmonton Alberta AOQP 7107(C)

WELDER PERFORMANCE QUALIFICATION CARD

Name JOVAN PAINCHAUD W-29484

Name ABSA File Number

This card is issued pursuant to the Safety Codes Act and the Pressure Welders Regulation. The performance qualification is in accordance with Section IX of the ASME BPV Code and subject to the limitations on the reverse side.

APRIL 18, 2012 J. Painchaud

Date of Test Welder Signature

BRUCE CORMIER 17685

Welding Examiner (Print/Type) GRB Card No.

Performance Qualification GRB Card No. 18733

Process(es) SMAW Materials (P.No.) P1

Filler Metal (F.No) F3 F4 Min. Outside Pipe Diameter 1" OD

Max Deposited Weld Metal 0.104" MAX TO WELD Position(s) Qualified ALL

Backing Without With Backing Gas N/A

Progression Uphill Uphill #E00 022 Examiner File No.

MARCH-05/15 J.R. Bellehumeur

P.Q. Expiry Date Welding Examiner Signature

GRB Enterprises Ltd
Edmonton Alberta AOQP 7107(C)

WELDER PERFORMANCE QUALIFICATION CARD

Name JOVAN LAURENT PAINCHAUD W-29484

Name ABSA File Number

This card is issued pursuant to the Safety Codes Act and the Pressure Welders Regulation. The performance qualification is in accordance with Section IX of the ASME BPV Code and subject to the limitations on the reverse side.

MARCH-05-13 J. Painchaud

Date of Test Welder Signature

G.R. BELLHUMEUR 18733

Welding Examiner (Print/Type) GRB Card No.

Welder Qualification

This card is valid only while employed by a CWB certified company

Transferable Welder

Name: JOVAN L. PAINCHAUD
Exp. Date: May 01, 2014
Employer: 5Blue Process Equipment Inc., Nisku, AB
Thickness Range: 3mm & above
Material: Carbon Steel
Process: SMAW
Mode: MANUAL
Standard: CSA W47.1
Classification: S
Electrode: F4
Class: FLAT/HORIZONTAL/VERTICAL UP/OVERHEAD

See Reverse for Conditions

Welder Qualification

This card is valid only while employed by a CWB certified company

Transferable Welder

Name: JOVAN L. PAINCHAUD
Exp. Date: May 01, 2014
Employer: 5Blue Process Equipment Inc., Nisku, AB
Thickness Range: 3mm & above
Material: Carbon Steel
Process: FCAW/MCAW
Mode: SEMI-AUTO
Single Electrode Mechanized
Single Electrode Automatic
Standard: CSA W47.1
Classification: S
Class: FLAT

See Reverse for Conditions

Alberta

ABSA
the pressure equipment safety authority

24610

Grade "B" Pressure Welder's
Certificate of Competency

This is to certify that Jovan Laurent Painchaud having complied with provisions of the Safety Codes Act, is authorized to engage in pressure welding in accordance with the prescribed Regulations.

Dated at Edmonton
August 04, 2011

Government of Alberta

W-29484
File no.

Chief Inspector and Administrator

Q12-0/871466

108698A

JOURNEYMAN CERTIFICATE

THIS IS TO CERTIFY THAT
JOVAN JOSEPH LAURENT PAINCHAUD
HAS COMPLETED AN ALBERTA APPRENTICESHIP PROGRAM AND HAVING ACHIEVED THE STANDARDS ESTABLISHED UNDER THE ALBERTA APPRENTICESHIP AND INDUSTRY TRAINING ACT, IS HEREBY AUTHORIZED TO WORK IN THE TRADE AS A JOURNEYMAN AND TO USE THE TITLE CERTIFIED JOURNEYMAN

WELDER

EFFECTIVE DATE
January 15th, 2010

ISSUE DATE
March 3rd, 2010

HONOURABLE DOUG HORNER
MINISTER OF
ADVANCED EDUCATION
AND TECHNOLOGY

Alberta

DARLENE BOUWSEMA,
EXECUTIVE DIRECTOR
OF APPRENTICESHIP
& INDUSTRY TRAINING

M

GRB ENTERPRISES LTD. 9712 - 54 Ave. EDMONTON ALBERTA T6E 0A9

2.5" x 0.625" wt

Exhibit 9.3A / AB-76 A Modified ***WELDER QUALIFICATION RECORD (WQR)***

Welder's Name: **Michael Poulin** ABSA File No.: W- **21843** Stamp No.:

Identification of WPS followed by welder during welding of test coupon: 5B-102AW-PWHT W.P. Reg. # WP- **3146.2(r0)**

Base material(s) welded: **SA 106 GR B** Thickness: **0.625"** ☒ Test Coupon ☐ Prod. Weld

Testing Variables and Qualification Limits

Welding Variables (QW-350)	**Actual Values**		**Range Qualified**	
Welding Process(es) Used:	SMAW	SMAW	SMAW	SMAW
Type of Welding (manual, semi-automatic) Used:	Manual	Manual	Manual	Manual
Base Metal P Number to P Number:	P1	P1	P1	P1
Plate ☐ Pipe ☒ enter diameter:	NPS 2.5	NPS 2.5	1" OD Min.	1" OD Min.
Backing (metal, weld metal, double weld etc.):	None / Weld metal	Weld Metal	Without / With	With
Filler Metal or Electrode Specification(s) SFA#:	5.1	5.1		
Filler Metal or Electrode Classification(s):	E6010	E7018-1		
Filler Metal or Electrode F - number(s):	F3	F4	F3	F4
Filler Type (solid metal, or flux cored/powder) GTAW or PAW:	N/A	N/A	N/A	N/A
Consumable Insert for GTAW or PAW:	N/A	N/A	N/A	N/A
Deposit Thickness for each process, electrode type, etc. (in.):	0.125"	0.500"	0.250"	Max. to weld
Process/Electrode 1: 3 layers minimum Yes ☐ No ☒	Process/Electrode 2: 3 layers minimum Yes ☒ No ☐			
Welding position (2G, 5G, 6G, 3F, etc.):	6G	6G	All	All
Progression (Uphill or Downhill):	Uphill	Uphill	Uphill	Uphill
Inert Gas backing for GTAW, PAW, GMAW:	N/A	N/A	N/A	N/A
Transfer Mode (spray/globular or pulse to short circuit):	N/A	N/A	N/A	N/A
GTAW Current Type/ Polarity (AC, DCEP, DCEN):	DCEP	DCEP	DCEP	DCEP

Results

Visual Examination of Fit-Up Root Gap: **3/32"** Tack Welds: **Bridge** Length: **0.5"** Number: **3**

Root Pass (Describe Discontinuity if Unacceptable): **OK**

Complete Weld (Describe Defects if Unacceptable): **OK**

Bend Test

☐ Transverse Root and Face QW-462.3a ☐ Longitudinal Root and Face QW-462.3b

☐ Pipe Bend Specimen, corrosion-resistant overlay QW-462.5c ☐ Plate Bend Specimen, corrosion-resistant overlay QW-462.5d

☒ Side Bend QW-462.2 ☐ Macro Test for Fusion QW-462.5b ☐ Macro Test for Fusion QW-462.5e

Bend Type	Result	Bend Type	Result	Bend Type	Result	Bend Type	Result
# 1 Side	Pass	# 3 Side	Pass				
# 2 Side	Pass	# 4 Side	Pass				

For alternative qualification of groove welds by radiography to QW-191

Radiographic Results: **N/A**

Fillet Weld-Fracture Test (QW-180): **N/A** Length and Percent of Defects: **N/A**

Macro Examination (QW-184): **N/A** Fillet Legs Size (in.): **N/A** X **N/A** Concavity/Convexity (in.): **N/A**

Other Tests: **N/A**

Record Information

Film or Specimens Evaluated by: **G.R.Belhumeur** Company: **GRB Enterprises Ltd.**

Welding Test Conducted by: **G.R.Belhumeur**

Mechanical Tests Conducted by: **GRB Enterprises Ltd.** Laboratory Test no.: **N/A**

Welding Supervised by: **N/A**

We certify that the statements in this record are correct and that the test coupons were prepared, welded and tested in accordance with the requirements of Section IX of the ASME Code.

Accredited Organization: GRB ENTERPRISES LTD. AOQP No: 7107(C) Expiry Date: **May 21 2015**

Certified by: **Bruce Cormier** W.E.File: **E-00252** Date: **May 28, 2013**

PQ Card No. (When Issued): **19118** Performance Test Reference No.: **13-05-28-03**

Test Coupon ID No.: **Welder Name** Date Coupon is Retained To: **N/A**

GRB ENTERPRISES LTD. 9712 - 54 Ave. EDMONTON ALBERTA T6E 0A9 **2" sch 160**

Exhibit 9.3A / AB-76 A Modified ***WELDER QUALIFICATION RECORD (WQR)***

Welder's Name: **Michael Poulin** ABSA File No.: W-**21843** Stamp No.:

Identification of WPS followed by welder during welding of test coupon: 5B103 AW/PWHT W.P. Reg. # WP- **3146.2 (r0)**

Base material(s) welded: **SA 106 GR B** Thickness: **0.344"** ☒ Test Coupon ☐ Prod. Weld

Testing Variables and Qualification Limits

Welding Variables (QW-350)	**Actual Values**		**Range Qualified**	
Welding Process(es) Used:	GMAW	SMAW	GMAW	SMAW
Type of Welding (manual, semi-automatic) Used:	Semi-Automatic	Manual	Semi-Automatic	Manual
Base Metal P Number to P Number:	P1	P1	P1	P1
Plate ☐ Pipe ☒ enter diameter:	NPS 2	NPS 2	1" OD Min.	1" OD Min.
Backing (metal, weld metal, double weld etc.):	None / Weld	Weld Metal	Without / With	With
Filler Metal or Electrode Specification(s) SFA#:	5.18	5.1		
Filler Metal or Electrode Classification(s):	ER70S-6	E7018-1		
Filler Metal or Electrode F - number(s):	F6	F4	F6	F4
Filler Type (solid metal, or flux cored/powder) GTAW or PAW:	Solid	N/A	Solid	N/A
Consumable Insert for GTAW or PAW:	N/A	N/A	N/A	N/A
Deposit Thickness for each process, electrode type, etc. (in.):	0.125"	0.219"	0.1375"	0.438"
Process/Electrode 1: 3 layers minimum Yes ☐ No ☒	Process/Electrode 2: 3 layers minimum Yes ☐ No ☒			
Welding position (2G, 5G, 6G, 3F, etc.):	6G	6G	All	All
Progression (Uphill or Downhill):	Downhill	Uphill	Downhill	Uphill
Inert Gas backing for GTAW, PAW, GMAW:	N/A	N/A	N/A	N/A
Transfer Mode (spray/globular or pulse to short circuit):	Short Circuit	N/A	Short Circuit	N/A
GTAW Current Type/ Polarity (AC, DCEP, DCEN):	DCEP	DCEP	DCEP	DCEP

Results

Visual Examination of Fit-Up Root Gap: **1/8"** Tack Welds: **Bridge** Length: **0.5"** Number: **3**

Root Pass (Describe Discontinuity if Unacceptable): **OK**

Complete Weld (Describe Defects if Unacceptable): **OK**

Bend Test

☒ Transverse Root and Face QW-462.3a ☐ Longitudinal Root and Face QW-462.3b

☐ Pipe Bend Specimen, corrosion-resistant overlay QW-462.5c ☐ Plate Bend Specimen, corrosion-resistant overlay QW-462.5d

☐ Side Bend QW-462.2 ☐ Macro Test for Fusion QW-462.5b ☐ Macro Test for Fusion QW-462.5e

Bend Type	Result	Bend Type	Result	Bend Type	Result	Bend Type	Result
# 1 Root	Pass	# 3 Root	Pass				
# 2 Face	Pass	# 4 Face	Pass				

For alternative qualification of groove welds by radiography to QW-191

Radiographic Results: **N/A**

Fillet Weld-Fracture Test (QW-180): **N/A** Length and Percent of Defects: **N/A**

Macro Examination (QW-184): **N/A** Fillet Legs Size (in.): **N/A** X **N/A** Concavity/Convexity (in.): **N/A**

Other Tests: **N/A**

Record Information

Film or Specimens Evaluated by: **G.R.Belhumeur** Company: **GRB Enterprises Ltd.**

Welding Test Conducted by: **G.R.Belhumeur**

Mechanical Tests Conducted by: **GRB Enterprises Ltd.** Laboratory Test no.: **N/A**

Welding Supervised by: **N/A**

We certify that the statements in this record are correct and that the test coupons were prepared, welded and tested in accordance with the requirements of Section IX of the ASME Code.

Accredited Organization: GRB ENTERPRISES LTD. AOQP No: 7107(C) Expiry Date: **May 21 2015**

Certified by: **Bruce Cormier** W.E.File: **E-00022** Date: **May 28, 2013**

PQ Card No. (When Issued): **19117** Performance Test Reference No.: **13-05-28-02**

Test Coupon ID No.: **Welder Name** Date Coupon is Retained To: **N/A**

GRB Enterprises Ltd
Edmonton Alberta

AOQP 7107(C)

WELDER PERFORMANCE QUALIFICATION CARD

MICHAEL
Name POULIN W-21843
Name ABSA File Number

This card is issued pursuant to the Safety Codes Act and the Pressure Welders Regulation. The performance qualification is in accordance with Section IX of the ASME BPV Code and subject to the limitations on the reverse side.

MAY 28, 2013 [signature]
Date of Test Welder Signature

BRUCE CORMIER 19118
Welding Examiner (Print/Type) GRB Card No.

GRB Enterprises Ltd
Edmonton Alberta

AOQP 7107(C)

WELDER PERFORMANCE QUALIFICATION CARD

MICHAEL
Name POULIN W-21843
Name ABSA File Number

This card is issued pursuant to the Safety Codes Act and the Pressure Welders Regulation. The performance qualification is in accordance with Section IX of the ASME BPV Code and subject to the limitations on the reverse side.

MAY 28, 2013 [signature]
Date of Test Welder Signature

BRUCE CORMIER 19117
Welding Examiner (Print/Type) GRB Card No.

Performance Qualification GRB Card No. 19118

Process(es) SMAW — Materials (P.No.) P1
Filler Metal (F.No) F3 F4 — Min. Outside Pipe Diameter 1" OD
Max Deposited Weld Metal 0.250" MAX. TO WELD — Position(s) Qualified ALL
Backing WITHOUT WITH WITH — Backing Gas NONE
Progression UPHILL — #E00 252 Examiner File No.

MAY 28, 2015 [signature]
P.Q. Expiry Date Welding Examiner Signature

Performance Qualification GRB Card No. 19117

Process(es) GMAW SMAW — Materials (P.No.) P1
Filler Metal (F.No) F6 F4 — Min. Outside Pipe Diameter 1" OD
Max Deposited Weld Metal 0.1375" 0.438" — Position(s) Qualified ALL
Backing WITHOUT WITH WITH — Backing Gas NONE
Progression DOWNHILL UPHILL — #E00 252 Examiner File No.

MAY 28, 2015 [signature]
P.Q. Expiry Date Welding Examiner Signature

Alberta
MUNICIPAL AFFAIRS

ABSA

17536

Grade "B" Pressure Welder's Certificate of Competency

This is to certify that Michael Poulin
having complied with provisions of the Safety Codes Act, is authorized to engage in pressure welding in accordance with the prescribed Regulations.

Dated at Edmonton
October 29, 2003

W-21843
File no.

Chief Inspector and Administrator

RMD PERFORMANCE QUALIFICATION

Process(es): GMAW / PULSE GMAW — Material (P-No.): P8

Filler Metal Group (F-No.): F6 / F6 — Min. Outside Pipe Diameter: 1"

Max. Deposited Weld Metal: 0.1375" / 0.438" — Position(s) Qualified: SP-1G

Backing: W/WO / WITH — Backing Gas: W/WO

Progression: N/A / N/A

MARCH 5, 2014 — P.Q. Expiry Date — Welding Examiner Signature — WE00080 — Certification No.

PERFORMANCE QUALIFICATION

Process(es): GMAW PULSED — Material (P-No.): P8

Filler Metal Group (F-No.): F6 — Min. Outside Pipe Diameter: 2 7/8

Max. Deposited Weld Metal: 1.186" — Position(s) Qualified: SP-1G

Backing: WITH — Backing Gas: N/A

Progression: N/A

JUNE 6, 2014 — P.Q. Expiry Date — Welding Examiner Signature — WE00080 — Certification No.

PERFORMANCE QUALIFICATION

Process(es): GMAW / SMAW — Material (P-No.): P8

Filler Metal Group (F-No.): F6 / F5 — Min. Outside Pipe Diameter: 1"

Max. Deposited Weld Metal: .137" / .186" — Position(s) Qualified: FLAT

Backing: W/H.D. / WITH — Backing Gas: W/N.G.

Progression: NA / NA

08-11-30 — P.Q. Expiry Date — Welding Examiner Signature — WG00091 — Certification No.

PERFORMANCE QUALIFICATION

Process(es): SMAW — Material (P-No.): P8

Filler Metal Group (F-No.): F5 — Min. Outside Pipe Diameter: 2 7/8

Max. Deposited Weld Metal: WPS LIMITS — Position(s) Qualified: FLAT

Backing: WITH — Backing Gas: N/A

Progression: N/A

JUNE 11, 2014 — P.Q. Expiry Date — Welding Examiner Signature — WE00080 — Certification No.

PERFORMANCE QUALIFICATION

Process(es): GTAW / SMAW — Material (P-No.): P4

Filler Metal Group (F-No.): F6 / F4 — Min. Outside Pipe Diameter: 1"

Max. Deposited Weld Metal: 0.25" / 0.622" — Position(s) Qualified: ALL

Backing: W/WO / WITH — Backing Gas: W/WO

Progression: UP / UP

JUNE 20, 2012 — P.Q. Expiry Date — Welding Examiner Signature — WE00080 — Certification No.

PERFORMANCE QUALIFICATION

Process(es): SMAW / FCAW — Material (P-No.): P4

Filler Metal Group (F-No.): F4 / F6 — Min. Outside Pipe Diameter: 2 7/8

Max. Deposited Weld Metal: 0.25" / WPS LIMITS — Position(s) Qualified: F, V, O

Backing: WITH / WITH — Backing Gas: N/A

Progression: UP / UP

JUNE 13, 2012 — P.Q. Expiry Date — Welding Examiner Signature — WE00080 — Certification No.

ENERFLEX

ENERFLEX LTD.
PRODUCTION & PROCESSING

7059
A.O.Q.P. No.

WELDER PERFORMANCE QUALIFICATION CARD

NAME: MICHAEL POULIN ABSA FILE NO.: W21843

COPY

This card is issued pursuant to the Alberta Safety Codes Act and the Pressure Welders Regulations. The performance qualification is in accordance with Section IX of the ASME Code and subject to the limitations on the reverse side.

MARCH 5, 2012
Date of Test

Signature of Welder or Machine Welding Operator

This performance qualification is valid for two years from date of test unless extended inside the card

DAN ROUDEAU
Welding Examiner (Print/Type)

Card No.: 1788

ENERFLEX

ENERFLEX LTD.
PRODUCTION & PROCESSING

7059
A.O.Q.P. No.

WELDER PERFORMANCE QUALIFICATION CARD

NAME: MICHAEL POULIN ABSA FILE NO.: W21843

COPY

This card is issued pursuant to the Alberta Safety Codes Act and the Pressure Welders Regulations. The performance qualification is in accordance with Section IX of the ASME Code and subject to the limitations on the reverse side.

JUNE 6, 2012
Date of Test

Signature of Welder or Machine Welding Operator

This performance qualification is valid for two years from date of test unless extended inside the card

DAN ROUDEAU
Welding Examiner (Print/Type)

Card No.: 1803

Presson ENERFLEX

ENERFLEX SYSTEMS LTD.
PRODUCTION & PROCESSING

7059
A.O.Q.P. No.

WELDER PERFORMANCE QUALIFICATION CARD

NAME: MICHAEL POULIN ABSA FILE NO.: W21843

COPY

This card is issued pursuant to the Alberta Safety Codes Act and the Pressure Welders Regulations. The performance qualification is in accordance with Section IX of the ASME Code and subject to the limitations on the reverse side.

06-11-30
Date of Test

Signature of Welder or Machine Welding Operator

This performance qualification is valid for two years from date of test unless extended inside the card

A. ROBINSON
Welding Examiner (Print/Type)

1291
Card No.

ENERFLEX

ENERFLEX LTD.
PRODUCTION & PROCESSING

7059
A.O.Q.P. No.

WELDER PERFORMANCE QUALIFICATION CARD

NAME: MICHAEL POULIN ABSA FILE NO.:

COPY

This card is issued pursuant to the Alberta Safety Codes Act and the Pressure Welders Regulations. The performance qualification is in accordance with Section IX of the ASME Code and subject to the limitations on the reverse side.

JUNE 11, 2012
Date of Test

Signature of Welder or Machine Welding Operator

This performance qualification is valid for two years from date of test unless extended inside the card

DAN ROUDEAU
Welding Examiner (Print/Type)

Card No.: 1809

ENERFLEX

ENERFLEX LTD.
PRODUCTION & PROCESSING

7059
A.O.Q.P. No.

WELDER PERFORMANCE QUALIFICATION CARD

NAME: MICHAEL POULIN ABSA FILE NO.: W21843

COPY

This card is issued pursuant to the Alberta Safety Codes Act and the Pressure Welders Regulations. The performance qualification is in accordance with Section IX of the ASME Code and subject to the limitations on the reverse side.

JUNE 20, 2012
Date of Test

Signature of Welder or Machine Welding Operator

This performance qualification is valid for two years from date of test unless extended inside the card

DAN ROUDEAU
Welding Examiner (Print/Type)

Card No.: 1835

ENERFLEX

ENERFLEX LTD.
PRODUCTION & PROCESSING

7059
A.O.Q.P. No.

WELDER PERFORMANCE QUALIFICATION CARD

NAME: MICHAEL POULIN ABSA FILE NO.: W21843

COPY

This card is issued pursuant to the Alberta Safety Codes Act and the Pressure Welders Regulations. The performance qualification is in accordance with Section IX of the ASME Code and subject to the limitations on the reverse side.

JUNE 13 2012
Date of Test

Signature of Welder or Machine Welding Operator

This performance qualification is valid for two years from date of test unless extended inside the card

DAN ROUDEAU
Welding Examiner (Print/Type)

Card No.: 1821

GRB ENTERPRISES LTD. 9712 - 54 Ave. EDMONTON ALBERTA T6E 0A9

2.5" x 0.625" wt

Exhibit 9.3A / AB-76 A Modified ***WELDER QUALIFICATION RECORD (WQR)***

Welder's Name: **Michael Poulin** ABSA File No.: W- **21843** Stamp No.:

Identification of WPS followed by welder during welding of test coupon: 5B-102AW-PWHT W.P. Reg. # WP- **3146.2(r0)**

Base material(s) welded: **SA 106 GR B** Thickness: **0.625"** ☒ Test Coupon ☐ Prod. Weld

Testing Variables and Qualification Limits

Welding Variables (QW-350)	**Actual Values**		**Range Qualified**	
Welding Process(es) Used:	SMAW	SMAW	SMAW	SMAW
Type of Welding (manual, semi-automatic) Used:	Manual	Manual	Manual	Manual
Base Metal P Number to P Number:	P1	P1	P1	P1
Plate ☐ Pipe ☒ enter diameter:	NPS 2.5	NPS 2.5	1" OD Min.	1" OD Min.
Backing (metal, weld metal, double weld etc.):	None / Weld metal	Weld Metal	Without / With	With
Filler Metal or Electrode Specification(s) SFA#:	5.1	5.1		
Filler Metal or Electrode Classification(s):	E6010	E7018-1		
Filler Metal or Electrode F - number(s):	F3	F4	F3	F4
Filler Type (solid metal, or flux cored/powder) GTAW or PAW:	N/A	N/A	N/A	N/A
Consumable Insert for GTAW or PAW:	N/A	N/A	N/A	N/A
Deposit Thickness for each process, electrode type, etc. (in.):	0.125"	0.500"	0.250"	Max. to weld
Process/Electrode 1: 3 layers minimum Yes ☐ No ☒	Process/Electrode 2: 3 layers minimum Yes ☒ No ☐			
Welding position (2G, 5G, 6G, 3F, etc.):	6G	6G	All	All
Progression (Uphill or Downhill):	Uphill	Uphill	Uphill	Uphill
Inert Gas backing for GTAW, PAW, GMAW:	N/A	N/A	N/A	N/A
Transfer Mode (spray/globular or pulse to short circuit):	N/A	N/A	N/A	N/A
GTAW Current Type/ Polarity (AC, DCEP, DCEN):	DCEP	DCEP	DCEP	DCEP

Results

Visual Examination of Fit-Up Root Gap: **3/32"** Tack Welds: **Bridge** Length: **0.5"** Number: **3**

Root Pass (Describe Discontinuity if Unacceptable): **OK**

Complete Weld (Describe Defects if Unacceptable): **OK**

Bend Test

☐ Transverse Root and Face QW-462.3a ☐ Longitudinal Root and Face QW-462.3b

☐ Pipe Bend Specimen, corrosion-resistant overlay QW-462.5c ☐ Plate Bend Specimen, corrosion-resistant overlay QW-462.5d

☒ Side Bend QW-462.2 ☐ Macro Test for Fusion QW-462.5b ☐ Macro Test for Fusion QW-462.5e

Bend Type	Result	Bend Type	Result	Bend Type	Result	Bend Type	Result
# 1 Side	Pass	# 3 Side	Pass				
# 2 Side	Pass	# 4 Side	Pass				

For alternative qualification of groove welds by radiography to QW-191

Radiographic Results: **N/A**

Fillet Weld-Fracture Test (QW-180): **N/A** Length and Percent of Defects: **N/A**

Macro Examination (QW-184): **N/A** Fillet Legs Size (in.): **N/A** X **N/A** Concavity/Convexity (in.): **N/A**

Other Tests: **N/A**

Record Information

Film or Specimens Evaluated by: **G.R. Belhumeur** Company: **GRB Enterprises Ltd.**

Welding Test Conducted by: **G.R. Belhumeur**

Mechanical Tests Conducted by: **GRB Enterprises Ltd.** Laboratory Test no.: **N/A**

Welding Supervised by: **5Blue Process Representative: Joelle Dery-Brochu**

We certify that the statements in this record are correct and that the test coupons were prepared, welded and tested in accordance with the requirements of Section IX of the ASME Code.

Accredited Organization: GRB ENTERPRISES LTD. AOQP No: 7107(C) Expiry Date: **May 21 2015**

Certified by: **Bruce Cormier** W.E.File: **E-00252** Date: **May 28, 2013**

PQ Card No. (When Issued): **19118** Performance Test Reference No.: **13-05-28-03**

Test Coupon ID No.: **Welder Name** Date Coupon is Retained To: **N/A**

GRB ENTERPRISES LTD. 9712 - 54 Ave. EDMONTON ALBERTA T6E 0A9 2" sch 160

Exhibit 9.3A / AB-76 A Modified *WELDER QUALIFICATION RECORD (WQR)*

Welder's Name: **Michael Poulin** ABSA File No.: W- **21843** Stamp No.:

Identification of WPS followed by welder during welding of test coupon: 5B103 AW/PWHT W.P. Reg. # WP- **3146.2 (r0)**

Base material(s) welded: **SA 106 GR B** Thickness: **0.344"** ☒ Test Coupon ☐ Prod. Weld

Testing Variables and Qualification Limits

Welding Variables (QW-350)	**Actual Values**		**Range Qualified**	
Welding Process(es) Used:	GMAW	SMAW	GMAW	SMAW
Type of Welding (manual, semi-automatic) Used:	Semi-Automatic	Manual	Semi-Automatic	Manual
Base Metal P Number to P Number:	P1	P1	P1	P1
Plate ☐ Pipe ☒ enter diameter:	NPS 2	NPS 2	1" OD Min.	1" OD Min.
Backing (metal, weld metal, double weld etc.):	None / Weld	Weld Metal	Without / With	With
Filler Metal or Electrode Specification(s) SFA#:	5.18	5.1		
Filler Metal or Electrode Classification(s):	ER70S-6	E7018-1		
Filler Metal or Electrode F - number(s):	F6	F4	F6	F4
Filler Type (solid metal, or flux cored/powder) GTAW or PAW:	Solid	N/A	Solid	N/A
Consumable Insert for GTAW or PAW:	N/A	N/A	N/A	N/A
Deposit Thickness for each process, electrode type, etc. (in.):	0.125"	0.219"	0.1375"	0.438"
Process/Electrode 1: 3 layers minimum Yes ☐ No ☒	Process/Electrode 2: 3 layers minimum Yes ☐ No ☒			
Welding position (2G, 5G, 6G, 3F, etc.):	6G	6G	All	All
Progression (Uphill or Downhill):	Downhill	Uphill	Downhill	Uphill
Inert Gas backing for GTAW, PAW, GMAW:	N/A	N/A	N/A	N/A
Transfer Mode (spray/globular or pulse to short circuit):	Short Circuit	N/A	Short Circuit	N/A
GTAW Current Type/ Polarity (AC, DCEP, DCEN):	DCEP	DCEP	DCEP	DCEP

Results

Visual Examination of Fit-Up Root Gap: **1/8"** Tack Welds: **Bridge** Length: **0.5"** Number: **3**

Root Pass (Describe Discontinuity if Unacceptable): **OK**

Complete Weld (Describe Defects if Unacceptable): **OK**

Bend Test

☒ Transverse Root and Face QW-462.3a ☐ Longitudinal Root and Face QW-462.3b

☐ Pipe Bend Specimen, corrosion-resistant overlay QW-462.5c ☐ Plate Bend Specimen, corrosion-resistant overlay QW-462.5d

☐ Side Bend QW-462.2 ☐ Macro Test for Fusion QW-462.5b ☐ Macro Test for Fusion QW-462.5e

Bend Type	Result	Bend Type	Result	Bend Type	Result	Bend Type	Result
# 1 Root	Pass	# 3 Root	Pass				
# 2 Face	Pass	# 4 Face	Pass				

For alternative qualification of groove welds by radiography to QW-191

Radiographic Results: **N/A**

Fillet Weld-Fracture Test (QW-180): **N/A** Length and Percent of Defects: **N/A**

Macro Examination (QW-184): **N/A** Fillet Legs Size (in.): **N/A** X **N/A** Concavity/Convexity (in.): **N/A**

Other Tests: **N/A**

Record Information

Film or Specimens Evaluated by: **G.R. Belhumeur** Company: **GRB Enterprises Ltd.**

Welding Test Conducted by: **G.R. Belhumeur**

Mechanical Tests Conducted by: **GRB Enterprises Ltd.** Laboratory Test no.: **N/A**

Welding Supervised by: **5Blue Representative: Joelle Dery-Brochu**

We certify that the statements in this record are correct and that the test coupons were prepared, welded and tested in accordance with the requirements of Section IX of the ASME Code.

Accredited Organization: GRB ENTERPRISES LTD. AOQP No: 7107(C) Expiry Date: **May 21 2015**

Certified by: **Bruce Cormier** W.E.File: **E-00252** Date: **May 28, 2013**

PQ Card No. (When Issued): **19117** Performance Test Reference No.: **13-05-28-02**

Test Coupon ID No.: **Welder Name** Date Coupon is Retained To: **N/A**

GRB Enterprises Ltd
Edmonton Alberta

AOQP 7107(C)

WELDER PERFORMANCE QUALIFICATION CARD

MICHAEL
Name POULIN W- 21843
Name ABSA File Number

This card is issued pursuant to the Safety Codes Act and the Pressure Welders Regulation. The performance qualification is in accordance with Section IX of the ASME BPV Code and subject to the limitations on the reverse side.

MAY 28, 2013 [signature]
Date of Test Welder Signature

BRUCE CORMIER 19118
Welding Examiner (Print/Type) GRB Card No.

GRB Enterprises Ltd
Edmonton Alberta

AOQP 7107(C)

WELDER PERFORMANCE QUALIFICATION CARD

MICHAEL
Name POULIN W- 21843
Name ABSA File Number

This card is issued pursuant to the Safety Codes Act and the Pressure Welders Regulation. The performance qualification is in accordance with Section IX of the ASME BPV Code and subject to the limitations on the reverse side.

MAY 28, 2013 [signature]
Date of Test Welder Signature

BRUCE CORMIER 19117
Welding Examiner (Print/Type) GRB Card No.

Performance Qualification GRB Card No. 19118

Process(es) SMAW Materials (P.No.) P1
Filler Metal (F.No) F3 F4 Min. Outside Pipe Diameter 1" OD
Max Deposited Weld Metal 0.250" MAX. TO WELD Position(s) Qualified ALL
Backing WITHOUT WITH WITH Backing Gas NONE
Progression UPHILL #E00 252 Examiner File No.
MAY 28, 2015 [signature]
P.Q. Expiry Date Welding Examiner Signature

Performance Qualification GRB Card No. 19117

Process(es) GMAW SMAW Materials (P.No.) P1
Filler Metal (F.No) F6 F4 Min. Outside Pipe Diameter 1" OD
Max Deposited Weld Metal 0.1375" 0.438" Position(s) Qualified ALL
Backing WITHOUT WITH WITH Backing Gas NONE
Progression DOWNHILL UPHILL #E00 252 Examiner File No.
MAY 28, 2015 [signature]
P.Q. Expiry Date Welding Examiner Signature

Alberta
MUNICIPAL AFFAIRS

ABSA

17536

Grade "B" Pressure Welder's Certificate of Competency

This is to certify that Michael Poulin
having complied with provisions of the Safety Codes Act, is authorized to engage in pressure welding in accordance with the prescribed Regulations.

Dated at Edmonton
October 29, 2003

W-21843
File no.

Chief Inspector and Administrator

RMD PERFORMANCE QUALIFICATION

Process(es): GMAW / PULSE GMAW — Material (P-No.): P8

Filler Metal Group (F-No.): F6 / F6 — Min. Outside Pipe Diameter: 1"

Max. Deposited Weld Metal: 0.1375" / 0.438" — Position(s) Qualified: SP-1G

Backing: W/WO / WITH — Backing Gas: W/WO

Progression: N/A / N/A

MARCH 5, 2014 — P.Q. Expiry Date — Welding Examiner Signature — WE00080 — Certification No.

PERFORMANCE QUALIFICATION

Process(es): GMAW PULSED — Material (P-No.): P8

Filler Metal Group (F-No.): F6 — Min. Outside Pipe Diameter: 2 7/8

Max. Deposited Weld Metal: 1.186" — Position(s) Qualified: SP-1G

Backing: WITH — Backing Gas: N/A

Progression: N/A

JUNE 6, 2014 — P.Q. Expiry Date — Welding Examiner Signature — WE00080 — Certification No.

PERFORMANCE QUALIFICATION

Process(es): GMAW / SMAW — Material (P-No.): P8

Filler Metal Group (F-No.): F6 / F5 — Min. Outside Pipe Diameter: 1"

Max. Deposited Weld Metal: .137" / .186" — Position(s) Qualified: FLAT

Backing: W/N.O. / WITH — Backing Gas: W/N.O.

Progression: NA / NA

08-11-30 — P.Q. Expiry Date — Welding Examiner Signature — WG00091 — Certification No.

PERFORMANCE QUALIFICATION

Process(es): SMAW — Material (P-No.): P8

Filler Metal Group (F-No.): F5 — Min. Outside Pipe Diameter: 2 7/8

Max. Deposited Weld Metal: WPS LIMITS — Position(s) Qualified: FLAT

Backing: WITH — Backing Gas: N/A

Progression: N/A

JUNE 11, 2014 — P.Q. Expiry Date — Welding Examiner Signature — WE00080 — Certification No.

PERFORMANCE QUALIFICATION

Process(es): GTAW / SMAW — Material (P-No.): P4

Filler Metal Group (F-No.): F6 / F4 — Min. Outside Pipe Diameter: 1"

Max. Deposited Weld Metal: 0.25" / 0.622" — Position(s) Qualified: ALL

Backing: W/WO / WITH — Backing Gas: W/WO

Progression: UP / UP

JUNE 20, 2012 — P.Q. Expiry Date — Welding Examiner Signature — WE00080 — Certification No.

PERFORMANCE QUALIFICATION

Process(es): SMAW / FCAW — Material (P-No.): P4

Filler Metal Group (F-No.): F4 / F6 — Min. Outside Pipe Diameter: 2 7/8

Max. Deposited Weld Metal: 0.25" / WPS LIMITS — Position(s) Qualified: F, V, O

Backing: WITH / WITH — Backing Gas: N/A

Progression: UP / UP

JUNE 13, 2012 — P.Q. Expiry Date — Welding Examiner Signature — WE00080 — Certification No.

ENERFLEX

ENERFLEX LTD.
PRODUCTION & PROCESSING

7059
A.O.Q.P. No.

WELDER PERFORMANCE QUALIFICATION CARD

NAME: MICHAEL POULIN ABSA FILE NO.: W21843

COPY

This card is issued pursuant to the Alberta Safety Codes Act and the Pressure Welders Regulations. The performance qualification is in accordance with Section IX of the ASME Code and subject to the limitations on the reverse side.

MARCH 5, 2012
Date of Test

Signature of Welder or Machine Welding Operator

This performance qualification is valid for two years from date of test unless extended inside the card

DAN ROUDEAU
Welding Examiner (Print/Type)

Card No.: 1788

ENERFLEX

ENERFLEX LTD.
PRODUCTION & PROCESSING

7059
A.O.Q.P. No.

WELDER PERFORMANCE QUALIFICATION CARD

NAME: MICHAEL POULIN ABSA FILE NO.: W21843

COPY

This card is issued pursuant to the Alberta Safety Codes Act and the Pressure Welders Regulations. The performance qualification is in accordance with Section IX of the ASME Code and subject to the limitations on the reverse side.

JUNE 6, 2012
Date of Test

Signature of Welder or Machine Welding Operator

This performance qualification is valid for two years from date of test unless extended inside the card

DAN ROUDEAU
Welding Examiner (Print/Type)

Card No.: 1803

Presson ENERFLEX

ENERFLEX SYSTEMS LTD.
PRODUCTION & PROCESSING

7059
A.O.Q.P. No.

WELDER PERFORMANCE QUALIFICATION CARD

NAME: MICHAEL POULIN ABSA FILE NO.: W21843

COPY

This card is issued pursuant to the Alberta Safety Codes Act and the Pressure Welders Regulations. The performance qualification is in accordance with Section IX of the ASME Code and subject to the limitations on the reverse side.

06-11-30
Date of Test

Signature of Welder or Machine Welding Operator

This performance qualification is valid for two years from date of test unless extended inside the card

A. ROBINSON
Welding Examiner (Print/Type)

1291
Card No.

ENERFLEX

ENERFLEX LTD.
PRODUCTION & PROCESSING

7059
A.O.Q.P. No.

WELDER PERFORMANCE QUALIFICATION CARD

NAME: MICHAEL POULIN ABSA FILE NO.:

COPY

This card is issued pursuant to the Alberta Safety Codes Act and the Pressure Welders Regulations. The performance qualification is in accordance with Section IX of the ASME Code and subject to the limitations on the reverse side.

JUNE 11, 2012
Date of Test

Signature of Welder or Machine Welding Operator

This performance qualification is valid for two years from date of test unless extended inside the card

DAN ROUDEAU
Welding Examiner (Print/Type)

Card No.: 1809

ENERFLEX

ENERFLEX LTD.
PRODUCTION & PROCESSING

7059
A.O.Q.P. No.

WELDER PERFORMANCE QUALIFICATION CARD

NAME: MICHAEL POULIN ABSA FILE NO.: W21843

COPY

This card is issued pursuant to the Alberta Safety Codes Act and the Pressure Welders Regulations. The performance qualification is in accordance with Section IX of the ASME Code and subject to the limitations on the reverse side.

JUNE 20, 2012
Date of Test

Signature of Welder or Machine Welding Operator

This performance qualification is valid for two years from date of test unless extended inside the card

DAN ROUDEAU
Welding Examiner (Print/Type)

Card No.: 1835

ENERFLEX

ENERFLEX LTD.
PRODUCTION & PROCESSING

7059
A.O.Q.P. No.

WELDER PERFORMANCE QUALIFICATION CARD

NAME: MICHAEL POULIN ABSA FILE NO.: W21843

COPY

This card is issued pursuant to the Alberta Safety Codes Act and the Pressure Welders Regulations. The performance qualification is in accordance with Section IX of the ASME Code and subject to the limitations on the reverse side.

JUNE 13 2012
Date of Test

Signature of Welder or Machine Welding Operator

This performance qualification is valid for two years from date of test unless extended inside the card

DAN ROUDEAU
Welding Examiner (Print/Type)

Card No.: 1821

O

GRB ENTERPRISES LTD. 9712 - 54 Ave. EDMONTON ALBERTA T6E 0A9

2.5" x 0.625" wt

Exhibit 9.3A / AB-76 A Modified ***WELDER QUALIFICATION RECORD (WQR)***

Welder's Name: **Dave Auger** ABSA File No.: W- **18509** Stamp No.:

Identification of WPS followed by welder during welding of test coupon: 5B-102AW-PWHT W.P. Reg. # WP- **3146.2(r0)**

Base material(s) welded: **SA 106 GR B** Thickness: **0.625"** ☒ Test Coupon ☐ Prod. Weld

Testing Variables and Qualification Limits

Welding Variables (QW-350)	**Actual Values**		**Range Qualified**	
Welding Process(es) Used:	SMAW	SMAW	SMAW	SMAW
Type of Welding (manual, semi-automatic) Used:	Manual	Manual	Manual	Manual
Base Metal P Number to P Number:	P1	P1	P1	P1
Plate ☐ Pipe ☒ enter diameter:	NPS 2.5	NPS 2.5	1" OD Min.	1" OD Min.
Backing (metal, weld metal, double weld etc.):	None / Weld metal	Weld Metal	Without / With	With
Filler Metal or Electrode Specification(s) SFA#:	5.1	5.1		
Filler Metal or Electrode Classification(s):	E6010	E7018-1		
Filler Metal or Electrode F - number(s):	F3	F4	F3	F4
Filler Type (solid metal, or flux cored/powder) GTAW or PAW:	N/A	N/A	N/A	N/A
Consumable Insert for GTAW or PAW:	N/A	N/A	N/A	N/A
Deposit Thickness for each process, electrode type, etc. (in.):	0.125"	0.500"	0.250"	Max. to weld
Process/Electrode 1: 3 layers minimum Yes ☐ No ☒		Process/Electrode 2: 3 layers minimum Yes ☒ No ☐		
Welding position (2G, 5G, 6G, 3F, etc.):	6G	6G	All	All
Progression (Uphill or Downhill):	Uphill	Uphill	Uphill	Uphill
Inert Gas backing for GTAW, PAW, GMAW:	N/A	N/A	N/A	N/A
Transfer Mode (spray/globular or pulse to short circuit):	N/A	N/A	N/A	N/A
GTAW Current Type/ Polarity (AC, DCEP, DCEN):	DCEP	DCEP	DCEP	DCEP

Results

Visual Examination of Fit-Up Root Gap: **3/32"** Tack Welds: **Bridge** Length: **0.5"** Number: **3**

Root Pass (Describe Discontinuity if Unacceptable): **OK**

Complete Weld (Describe Defects if Unacceptable): **OK**

Bend Test

☐ Transverse Root and Face QW-462.3a ☐ Longitudinal Root and Face QW-462.3b

☐ Pipe Bend Specimen, corrosion-resistant overlay QW-462.5c ☐ Plate Bend Specimen, corrosion-resistant overlay QW-462.5d

☒ Side Bend QW-462.2 ☐ Macro Test for Fusion QW-462.5b ☐ Macro Test for Fusion QW-462.5e

Bend Type	Result	Bend Type	Result	Bend Type	Result	Bend Type	Result
# 1 Side	Pass	# 3 Side	Pass				
# 2 Side	Pass	# 4 Side	Pass				

For alternative qualification of groove welds by radiography to QW-191

Radiographic Results: **N/A**

Fillet Weld-Fracture Test (QW-180): **N/A** Length and Percent of Defects: **N/A**

Macro Examination (QW-184): **N/A** Fillet Legs Size (in.): **N/A** X **N/A** Concavity/Convexity (in.): **N/A**

Other Tests: **N/A**

Record Information

Film or Specimens Evaluated by: **Bruce Cormier** Company: **GRB Enterprises Ltd.**

Welding Test Conducted by: **Bruce Cormier**

Mechanical Tests Conducted by: **GRB Enterprises Ltd.** Laboratory Test no.: **N/A**

Welding Supervised by: **5Blue Representative: Andrew Ngo**

We certify that the statements in this record are correct and that the test coupons were prepared, welded and tested in accordance with the requirements of Section IX of the ASME Code.

Accredited Organization: GRB ENTERPRISES LTD. AOQP No: 7107(C) Expiry Date: **May 21 2015**

Certified by: **Bruce Cormier** W.E.File: **E-00252** Date: **July 08, 2013**

PQ Card No. (When Issued): **19287** Performance Test Reference No.: **13-07-08-08**

Test Coupon ID No.: **Welder Name** Date Coupon is Retained To: **N/A**

GRB ENTERPRISES LTD. 9712 - 54 Ave. EDMONTON ALBERTA T6E 0A9 2" sch 80

Exhibit 9.3A / AB-76 A Modified *WELDER QUALIFICATION RECORD (WQR)*

Welder's Name: **Dave Auger** ABSA File No.: W- **18509** Stamp No.:

Identification of WPS followed by welder during welding of test coupon: **5B103 AW/PWHT** W.P. Reg. # WP- **3146.2 (r0)**

Base material(s) welded: **SA 106 GR B** Thickness: **0.218"** ☒ Test Coupon ☐ Prod. Weld

Testing Variables and Qualification Limits

Welding Variables (QW-350)	Actual Values		Range Qualified	
Welding Process(es) Used:	GMAW	SMAW	GMAW	SMAW
Type of Welding (manual, semi-automatic) Used:	Semi-Automatic	Manual	Semi-Automatic	Manual
Base Metal P Number to P Number:	P1	P1	P1	P1
Plate ☐ Pipe ☒ enter diameter:	NPS 2	NPS 2	1" OD Min.	1" OD Min.
Backing (metal, weld metal, double weld etc.):	None / Weld	Weld Metal	Without / With	With
Filler Metal or Electrode Specification(s) SFA#:	5.18	5.1		
Filler Metal or Electrode Classification(s):	ER70S-6	E7018-1		
Filler Metal or Electrode F - number(s):	F6	F4	F6	F4
Filler Type (solid metal, or flux cored/powder) GTAW or PAW:	Solid	N/A	Solid	N/A
Consumable Insert for GTAW or PAW:	N/A	N/A	N/A	N/A
Deposit Thickness for each process, electrode type, etc. (in.):	0.125"	0.093"	0.1375"	0.186"
Process/Electrode 1: 3 layers minimum Yes ☐ No ☒	Process/Electrode 2: 3 layers minimum Yes ☐ No ☒			
Welding position (2G, 5G, 6G, 3F, etc.):	6G	6G	All	All
Progression (Uphill or Downhill):	Downhill	Uphill	Downhill	Uphill
Inert Gas backing for GTAW, PAW, GMAW:	N/A	N/A	N/A	N/A
Transfer Mode (spray/globular or pulse to short circuit):	Short Circuit	N/A	Short Circuit	N/A
GTAW Current Type/ Polarity (AC, DCEP, DCEN):	DCEP	DCEP	DCEP	DCEP

Results

Visual Examination of Fit-Up Root Gap: **1/8"** Tack Welds: **Bridge** Length: **0.5"** Number: **3**

Root Pass (Describe Discontinuity if Unacceptable): **OK**

Complete Weld (Describe Defects if Unacceptable): **OK**

Bend Test

☒ Transverse Root and Face QW-462.3a ☐ Longitudinal Root and Face QW-462.3b

☐ Pipe Bend Specimen, corrosion-resistant overlay QW-462.5c ☐ Plate Bend Specimen, corrosion-resistant overlay QW-462.5d

☐ Side Bend QW-462.2 ☐ Macro Test for Fusion QW-462.5b ☐ Macro Test for Fusion QW-462.5e

Bend Type	Result	Bend Type	Result	Bend Type	Result	Bend Type	Result
# 1 Root	Pass	# 3 Root	Pass				
# 2 Face	Pass	# 4 Face	Pass				

For alternative qualification of groove welds by radiography to QW-191

Radiographic Results: **N/A**

Fillet Weld-Fracture Test (QW-180): **N/A** Length and Percent of Defects: **N/A**

Macro Examination (QW-184): **N/A** Fillet Legs Size (in.): **N/A** X **N/A** Concavity/Convexity (in.): **N/A**

Other Tests: **N/A**

Record Information

Film or Specimens Evaluated by: **Bruce Cormier** Company: **GRB Enterprises Ltd.**

Welding Test Conducted by: **Bruce Cormier**

Mechanical Tests Conducted by: **GRB Enterprises Ltd.** Laboratory Test no.: **N/A**

Welding Supervised by: **5Blue Representative: Andrew Ngo**

We certify that the statements in this record are correct and that the test coupons were prepared, welded and tested in accordance with the requirements of Section IX of the ASME Code.

Accredited Organization: GRB ENTERPRISES LTD. AOQP No: 7107(C) Expiry Date: **May 21 2015**

Certified by: **Bruce Cormier** _____ W.E.File: **E-00252** Date: **July 08, 2013**

PQ Card No. (When Issued): **19288** Performance Test Reference No.: **13-07-08-09**

Test Coupon ID No.: **Welder Name** Date Coupon is Retained To: **N/A**

GRB ENTERPRISES LTD. 9712 - 54 Ave. EDMONTON ALBERTA T6E 0A9 2.5" sch xxh

Exhibit 9.3A / AB-76 A Modified ***WELDER QUALIFICATION RECORD (WQR)***

Welder's Name: **Dave Auger** ABSA File No.: W- **18509** Stamp No.:

Identification of WPS followed by welder during welding of test coupon: **5B-108 (rev 1)** W.P. Reg. # WP- **3146.2**

Base material(s) welded: **SA 106 GR B** Thickness: **0.625"** ☒ Test Coupon ☐ Prod. Weld

Testing Variables and Qualification Limits

Welding Variables (QW-350)	Actual Values		Range Qualified	
Welding Process(es) Used:	GMAW	SMAW	GMAW	SMAW
Type of Welding (manual, semi-automatic) Used:	Semi-Automatic	Manual	Semi-Automatic	Manual
Base Metal P Number to P Number:	P1	P1	P1through P8	P1 through P8
Plate ☐ Pipe ☒ enter diameter:	NPS 2.5	NPS 2.5	1" OD Min.	1" OD Min.
Backing (metal, weld metal, double weld etc.):	None / Weld	Weld Metal	Without / With	With
Filler Metal or Electrode Specification(s) SFA#:	5.9	5.4		
Filler Metal or Electrode Classification(s):	ER316Si	E316L-16		
Filler Metal or Electrode F - number(s):	F6	F5	F6	F5
Filler Type (solid metal, or flux cored/powder) GTAW or PAW:	Solid	N/A	Solid	N/A
Consumable Insert for GTAW or PAW:	N/A	N/A	N/A	N/A
Deposit Thickness for each process, electrode type, etc. (in.):	0.125"	0.500"	0.1375"	Max. to weld
Process/Electrode 1: 3 layers minimum Yes ☐ No ☒	Process/Electrode 2: 3 layers minimum Yes ☒ No ☐			
Welding position (2G, 5G, 6G, 3F, etc.):	SP*	1G	SP/Flat	Flat
Progression (Uphill or Downhill):	N/A	N/A	N/A	N/A
Inert Gas backing for GTAW, PAW, GMAW:	N/A	N/A	N/A	N/A
Transfer Mode (spray/globular or pulse to short circuit):	Short Circuit	N/A	Short Circuit	N/A
GTAW Current Type/ Polarity (AC, DCEP, DCEN):	DCEP	DCEP	DCEP	DCEP

Results

Visual Examination of Fit-Up Root Gap: **1/8"** Tack Welds: **Bridge** Length: **0.5"** Number: **3**

Root Pass (Describe Discontinuity if Unacceptable): **OK**

Complete Weld (Describe Defects if Unacceptable): **OK**

Bend Test

☐ Transverse Root and Face QW-462.3a ☐ Longitudinal Root and Face QW-462.3b

☐ Pipe Bend Specimen, corrosion-resistant overlay QW-462.5c ☐ Plate Bend Specimen, corrosion-resistant overlay QW-462.5d

☒ Side Bend QW-462.2 ☐ Macro Test for Fusion QW-462.5b ☐ Macro Test for Fusion QW-462.5e

Bend Type	Result	Bend Type	Result	Bend Type	Result	Bend Type	Result
# 1 Side	Pass						
# 2 Side	Pass						

For alternative qualification of groove welds by radiography to QW-191

Radiographic Results: **N/A**

Fillet Weld-Fracture Test (QW-180): **N/A** Length and Percent of Defects: **N/A**

Macro Examination (QW-184): **N/A** Fillet Legs Size (in.): **N/A** X **N/A** Concavity/Convexity (in.): **N/A**

Other Tests: **Applicable to WPS 5B-107(rev 0) Special Position 60 degrees from TDC.**

Record Information

Film or Specimens Evaluated by: **Bruce Cormier** Company: **GRB Enterprises Ltd.**

Welding Test Conducted by: **Bruce Cormier**

Mechanical Tests Conducted by: **GRB Enterprises Ltd.** Laboratory Test no.: **N/A**

Welding Supervised by: **5Blue Process Representative: Joelle Dery-Brochu**

We certify that the statements in this record are correct and that the test coupons were prepared, welded and tested in accordance with the requirements of Section IX of the ASME Code.

Accredited Organization: GRB ENTERPRISES LTD. AOQP No: 7107(C) Expiry Date: **May 21 2015**

Certified by: **Bruce Cormier** W.E.File: **E-00252** Date: **October 17, 2013**

PQ Card No. (When Issued): **19755** Performance Test Reference No.: **13-10-17-04**

Test Coupon ID No.: **Welder Name** Date Coupon is Retained To: **N/A**

GRB ENTERPRISES LTD. 9712 - 54 Ave. EDMONTON ALBERTA T6E 0A9 2.5" sch XXH

Exhibit 9.3A / AB-76 A Modified ***WELDER QUALIFICATION RECORD (WQR)***

Welder's Name: **Dave Auger** ABSA File No.: W- **18509** Stamp No.:

Identification of WPS followed by welder during welding of test coupon: **5B-111(rev0)** W.P. Reg. # WP- **3146.2**

Base material(s) welded: **SA 333 GR 6** Thickness: **0.552"** ☒ Test Coupon ☐ Prod. Weld

Testing Variables and Qualification Limits

Welding Variables (QW-350)	**Actual Values**		**Range Qualified**	
Welding Process(es) Used:	GTAW		GTAW	
Type of Welding (manual, semi-automatic) Used:	Manual		Manual	
Base Metal P Number to P Number:	P1		P1 through P8	
Plate ☐ Pipe ☒ enter diameter:	NPS 2.5		1" OD Min.	
Backing (metal, weld metal, double weld etc.):	None / Weld		Without / With	
Filler Metal or Electrode Specification(s) SFA#:	5.9			
Filler Metal or Electrode Classification(s):	ER316L			
Filler Metal or Electrode F - number(s):	F6		F6	
Filler Type (solid metal, or flux cored/powder) GTAW or PAW:	Solid		Solid	
Consumable Insert for GTAW or PAW:	N/A		N/A	
Deposit Thickness for each process, electrode type, etc. (in.):	0.552"		Max. to weld	
Process/Electrode 1: 3 layers minimum Yes ☒ No ☐	Process/Electrode 2: 3 layers minimum Yes ☐ No ☐			
Welding position (2G, 5G, 6G, 3F, etc.):	6G		All	
Progression (Uphill or Downhill):	Uphill		Uphill	
Inert Gas backing for GTAW, PAW, GMAW:	Argon		With	
Transfer Mode (spray/globular or pulse to short circuit):	N/A		N/A	
GTAW Current Type/ Polarity (AC, DCEP, DCEN):	DCEN		DCEN	

Results

Visual Examination of Fit-Up Root Gap: **5/32"** Tack Welds: **Bridge** Length: **0.5"** Number: **3**

Root Pass (Describe Discontinuity if Unacceptable): **OK**

Complete Weld (Describe Defects if Unacceptable): **OK**

Bend Test

☐ Transverse Root and Face QW-462.3a ☐ Longitudinal Root and Face QW-462.3b

☐ Pipe Bend Specimen, corrosion-resistant overlay QW-462.5c ☐ Plate Bend Specimen, corrosion-resistant overlay QW-462.5d

☒ Side Bend QW-462.2 ☐ Macro Test for Fusion QW-462.5b ☐ Macro Test for Fusion QW-462.5e

Bend Type	Result	Bend Type	Result	Bend Type	Result	Bend Type	Result
# 1 Side	Pass	# 3 Side	Pass				
# 2 Side	Pass	# 4 Side	Pass				

For alternative qualification of groove welds by radiography to QW-191

Radiographic Results: **N/A**

Fillet Weld-Fracture Test (QW-180): **N/A** Length and Percent of Defects: **N/A**

Macro Examination (QW-184): **N/A** Fillet Legs Size (in.): **N/A** X **N/A** Concavity/Convexity (in.): **N/A**

Other Tests: **N/A**

Record Information

Film or Specimens Evaluated by: **Bruce Cormier** Company: **GRB Enterprises Ltd.**

Welding Test Conducted by: **Bruce Cormier**

Mechanical Tests Conducted by: **GRB Enterprises Ltd.** Laboratory Test no.: **N/A**

Welding Supervised by: **5Blue Process Representative: Joelle Dery-Brochu**

We certify that the statements in this record are correct and that the test coupons were prepared, welded and tested in accordance with the requirements of Section IX of the ASME Code.

Accredited Organization: GRB ENTERPRISES LTD. AOQP No: 7107(C) Expiry Date: **May 21 2015**

Certified by: **Bruce Cormier** W.E.File: **E-00252** Date: **October 17, 2013**

PQ Card No. (When Issued): **19756** Performance Test Reference No.: **13-10-17-05**

Test Coupon ID No.: **Welder Name** Date Coupon is Retained To: **N/A**

Performance Qualification GRB Card No. 19287

Process(es): SMAW — Materials (P.No.): P1

Filler Metal (F.No): F3 F4 — Min. Outside Pipe Diameter: 1" OD

Max Deposited Weld Metal: 0.250" MAX. TO WELD — Position(s) Qualified: ALL

Backing: WITHOUT- WITH WITH — Backing Gas: NONE

Progression: UPHILL — #E00 252 Examiner File No.

JULY 8, 2015 — P.Q. Expiry Date

B. Cornier — Welding Examiner Signature

GRB Enterprises Ltd
Edmonton Alberta — AOQP 7107(C)

WELDER PERFORMANCE QUALIFICATION CARD

DAVE
Name

AUGER — W-18509
Name — ABSA File Number

This card is issued pursuant to the Safety Codes Act and the Pressure Welders Regulation. The performance qualification is in accordance with Section IX of the ASME BPV Code and subject to the limitations on the reverse side.

JULY 8, 2013
Date of Test

Welder Signature

BRUCE CORNIER
Welding Examiner (Print/Type)

19287
GRB Card No.

Performance Qualification GRB Card No. 19288

Process(es)	GMAW	SMAW	
Filler Metal (F.No)	F6	F4	
Max Deposited Weld Metal	0.1375"	0.186"	
Backing	WITHOUT	WITH	WITH
Progression	DOWNHILL	UPHILL	

Materials (P.No.) P1
Min. Outside Pipe Diameter 1"00
Position(s) Qualified ALL
Backing Gas NONE
#E00 252
Examiner File No.

JULY 8, 2015
P.Q. Expiry Date

Welding Examiner Signature

GRB Enterprises Ltd
Edmonton Alberta

AOQP 7107(C)

WELDER PERFORMANCE QUALIFICATION CARD

DAVE
Name

AUGER
Name

W-18509
ABSA File Number

This card is issued pursuant to the Safety Codes Act and the Pressure Welders Regulation. The performance qualification is in accordance with Section IX of the ASME BPV Code and subject to the limitations on the reverse side.

JULY 8, 2013
Date of Test

Welder Signature

BRUCE CORMIER
Welding Examiner (Print/Type)

19288
GRB Card No.

GRB Enterprises Ltd
Edmonton Alberta AOQP 7107(C)

WELDER PERFORMANCE QUALIFICATION CARD

DAVE
Name

AUGER W-185c9
Name ABSA File Number

This card is issued pursuant to the Safety Codes Act and the Pressure Welders Regulation. The performance qualification is in accordance with Section IX of the ASME BPV Code and subject to the limitations on the reverse side.

OCT 17, 2013 [signature]
Date of Test Welder Signature

BRUCE CORMIER 19755
Welding Examiner (Print/Type) GRB Card No.

GRB Enterprises Ltd
Edmonton Alberta AOQP 7107(C)

WELDER PERFORMANCE QUALIFICATION CARD

DAVE
Name

AUGER W-185c9
Name ABSA File Number

This card is issued pursuant to the Safety Codes Act and the Pressure Welders Regulation. The performance qualification is in accordance with Section IX of the ASME BPV Code and subject to the limitations on the reverse side.

OCT 17, 2013 [signature]
Date of Test Welder Signature

BRUCE CORMIER 19756
Welding Examiner (Print/Type) GRB Card No.

Performance Qualification GRB Card No. 19755

Process(es)	GMAW / SMAW	Materials (P.No.) P1 THROUGH P8
Filler Metal (F.No)	F6 / F5	Min. Outside Pipe Diameter 1" OD
Max Deposited Weld Metal	0.375" MAX. TO WELD	Position(s) Qualified F6S SP/F
Backing	WITHOUT - WITH / WITH	Backing Gas F5: FLAT NONE
Progression	N/A / N/A	#E00 252 Examiner File No.

OCT 17, 2015 [signature]
P.Q. Expiry Date Welding Examiner Signature

Performance Qualification GRB Card No. 19756

Process(es)	GTAW	Materials (P.No.) P1 THROUGH P8
Filler Metal (F.No)	F6	Min. Outside Pipe Diameter 1" OD
Max Deposited Weld Metal	MAX. TO WELD	Position(s) Qualified ALL
Backing	WITHOUT - WITH	Backing Gas WITH
Progression	UPHILL	#E00 252 Examiner File No.

OCT 17, 2015 [signature]
P.Q. Expiry Date Welding Examiner Signature

Alberta
MUNICIPAL AFFAIRS

ABSA

Grade "B" Pressure Welder's
Certificate of Competency

This is to Certify that: Dave Auger
having complied with provisions of the Safety Codes Act, is authorized to engage in pressure welding in accordance with the prescribed Regulations.

Dated at Edmonton, this
September 12, 2000

W- 18509
File No.

Chief Inspector and Administrator

Form No. AB-117 Rev (99/10)

№ 13353



B31 Non-Destructive Exam Procedures (NDE)

2303-8th Street, Nisku Alberta, T9E-7Z3 CANADA



See All Previously Submitted NDE Procedures

2303-8th Street, Nisku Alberta, T9E-7Z3 CANADA



B33 Weld Repair Procedure

2303-8th Street, Nisku Alberta, T9E-7Z3 CANADA

21.0 REPAIRS AND/OR ALTERATIONS TO EXISTING PRESSURE VESSELS

21.0 Purpose

To provide the system for control of repairs and/or alterations to existing pressure vessels.

21.1 Regulations

All repairs and/or alterations shall be in accordance with the Alberta Safety Codes Act and Regulations.

21.2 Repair/Alteration Procedures

The Quality Supervisor and Engineering Manager will develop a detailed procedure for all repairs/alterations containing at least:

- Vessel description, year built, Alberta (A) Number
- C.R.N., Original Manufacturer and Year Built
- Owner and location of installation, Owner's Identification Number
- Detailed step by step description of repair/alteration methods
- Sketch/Drawings, weld details and welding procedure specification numbers
- SA material specifications and sizes of all material to be used
- Non-destructive Examination and Heat Treatment requirements
- Pressure test requirements
- Any additional requirements

The Boiler and Pressure Vessel Repair/Alteration Report (AB-40) may be used to detail the procedure when suitable.

21.3 Registration

The Quality Supervisor shall obtain acceptance of the repair/alteration procedure, from Authorized Inspector and Owner prior to start of work. When required by the Authorized Inspector, this procedure will be submitted to ABSA Design Survey for acceptance. The Quality Supervisor will ensure that copies of the latest repair/alteration procedure, drawings and instructions are provided to personnel responsible for repair/alteration.

21.4 Warranty

If the Pressure Vessel is still under warranty, then the Project Manager will contact the Owner to obtain acceptance of proposed work from the original Manufacturer.

21.5 Alterations

The following additional requirements shall apply for alterations:

a) The Engineering Manager will prepare detailed design calculations and drawings in accordance with Section 10 of this Manual.
b) The Engineering Manager will submit the alterations procedure, design calculations and drawings to ABSA Design Survey Section for acceptance prior to start of work unless specifically exempt by Authorized Inspector.

21.6 Material Control

All requirements detailed in Section 11 of this Manual shall apply except as modified below:

Material shall be ordered to SA Specification listed in the Code from Bill of Materials or Repair/Alteration Procedure supplied by the Engineering Manager.

21.7 Examination & Inspection Program

The Repair/Alteration Inspection Checklist **(Exhibit 23.33)** shall contain provision for sign off by the Quality Inspector and Authorized Inspector. This shall be provided to the Authorized Inspector prior to the start of work so he can indicate his inspection and hold points. Upon satisfactory completion of the repair/alteration, the Quality Inspector will prepare and certify the Repair/Alteration Report and will present it to the Authorized Inspector for his certification.
One copy of the Repair/Alteration Report will be provided to the Owner, one copy to the Authorized Inspector, and one copy will be placed in the Quality Control Job file. A copy of each Manufacturer's Partial Data Report shall be attached to this report. When required by Authorized Inspector, a repair / alteration name plate **(Exhibit 23.15)** will be attached to vessel adjacent to the original with the following stamping;

a) Name of Repair/Alteration Organization
b) Date of repair/alteration
c) Maximum allowable working pressure and temperature
d) Original manufacturer's Name & Original Serial Number
e) Canadian Registration Number
f) MDMT (when applicable)
g) Job Number

21.8 Welding

All requirements detailed in Section 14 of this Manual shall apply for repairs/alterations.

21.9 Non-conformities

All requirements detailed in Section 16 of this Manual shall apply for repairs/alterations.

21.10 Non-destructive Examinations

All requirements detailed in Section 15 of this Manual shall apply for repairs/alterations.

21.11 Heat Treatment

All requirements detailed in Section 17 of this Manual shall apply for repairs/alterations.

21.12 Pressure Tests

All requirements detailed in Section 19 of this Manual shall apply except as modified below:

Vessel shall be subject to a hydrostatic test of unless specifically exempt by Authorized Inspector

21.13 Record Retention

The Project Engineer will assign a separate Job Number and Quality Control Job file for each vessel repaired/altered. The Quality Control Job file will contain the following applicable documents, all identified with the job number:

a) Drawings, Repair/Alteration Procedure
b) Copies of Material Test Reports, Certificates of Compliance
c) Non-destructive Examination Reports
d) Heat Treatment Form and Charts
e) Repair/Alteration Examination and Vessel Travel Sheet
f) Repair/Alteration Report with Manufacturers Partial Data Reports attached
g) Nameplate Facsimile

5Blue
Process Equipment Inc.

B34 Contractor Certifications (Quality System Cert e.g. ISO 9001, ASME Sect VIII Div 1, 2 and/or 3, Provincial CSA B51, ASME B31.1, B31.3, CWB, AWS, etc.)

2303-8th Street, Nisku Alberta, T9E-7Z3 CANADA

CERTIFICATE OF AUTHORIZATION

U

The named company is authorized by the American Society of Mechanical Engineers (ASME) for the scope of activity shown below in accordance with the applicable rules of the ASME Boiler and Pressure Vessel Code. The use of the certification mark and the authority granted by this Certificate of Authorization are subject to the provisions of the agreement set forth in the application. Any construction stamped with this certification mark shall have been built strictly in accordance with the provisions of the ASME Boiler and Pressure Vessel Code.

COMPANY:

5Blue Process Equipment Inc.
2303 - 8th Street
Nisku, Alberta, T9E 7Z3
Canada

SCOPE:

Manufacture of pressure vessels at the above location only

AUTHORIZED: **December 6, 2013**

EXPIRES: **February 4, 2017**

CERTIFICATE NUMBER: **40,338**

Bryan A. Erler

Vice President, Conformity Assessment

David A. Wyatt

Director, Conformity Assessment

The American Society of Mechanical Engineers



THE NATIONAL BOARD
OF
BOILER & PRESSURE VESSEL INSPECTORS

Certificate of Authorization

This is to certify that

5BLUE PROCESS EQUIPMENT INC.
2303-8TH STREET
NISKU, AB T9E 7Z3
CANADA

is authorized to apply the "NB" mark and register boilers, pressure vessels, or other pressure retaining items with the National Board in accordance with its provisions.
The scope of Authorization is limited to items manufactured in accordance with:

ASME *Designator(s):* *U*

ISSUE DATE: January 13, 2014

EXPIRATION DATE: February 4, 2017

Executive Director

NB 137 Rev. 8

Alberta

ABSA
the pressure equipment safety authority

Certificate of Authorization Permit

Quality Management System

Expiry Date: **February 4, 2017** Reg. No.: **AQP-1507**

5BLUE PROCESS EQUIPMENT INC.

2303 - 8 STREET
NISKU, ALBERTA

having complied with the provisions of the SAFETY CODES ACT, is hereby authorized to perform the activities identified in the following table:

	Construction	Repair	Alter
Pressure Vessels			
ASME Section VIII-1	Shop	Shop	Shop
Indirect Fired Heater Coils			
ASME B31.3 Indirect Fired Heater Coils	Shop	Shop	Shop
Pressure Piping			
ASME B31.1 Power Piping	Shop	Shop	Shop
ASME B31.3 Process Piping	Shop	Shop	Shop
Fittings			
Category A,H	Shop	---	---

Government of Alberta
PROVINCE OF ALBERTA

As a condition of this permit, the holder is required to participate in interim audits by a safety codes officer to verify that the quality management system is being maintained in a manner acceptable to a safety codes officer.

Dated at Edmonton, this 27th day of November, 2013

Chief Inspector and Administrator

Certificate No.: 9574

Form No. AB-121
Rev. (2012/09)

LETTER OF VALIDATION

The CWB acknowledges that

5Blue Process Equipment Inc.

2303 - 8th Street , Nisku, AB T9E 7Z3 Canada

is certified to CSA Standard **W47.1**

"Certification of Companies for Fusion Welding of Steel"

in DIVISION 2

for the period **December 20, 2013** to **January 19, 2015**

Company Code: 5BLUE1

Scope: Fabrication, welding and installation of miscellaneous structural steel skids, platforms and other components for petro chemical, oilfield, mining and forestry industries.

Registrar

The product certification system operated by the Canadian Welding Bureau most closely resembles that described by ISO/IEC Guide 67, Conformity assessment — Fundamentals of product certification, System 6.

8260 Parkhill Drive, Milton, Ontario L9T 5V7
1-800-844-6790 | Int: 905-542-1312 | Fax: 905-542-1318
Email: info@cwbgroup.org | Web: www.cwbgroup.org

APEGA The Association of Professional Engineers and Geoscientists of Alberta

PERMIT TO PRACTICE

P11381

5Blue Process Equipment Inc.

Is Hereby Authorized to Engage in the Practice of Engineering in the Province of Alberta

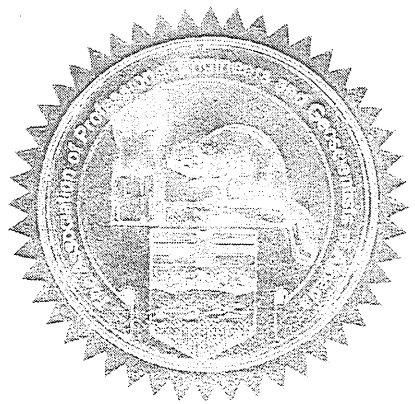

Colin Yeo P.Geo.
President

A. J. Schuld P.Eng.
Registrar

Start Date: June 1, 2013
Expiry Date: May 31, 2014
Permit Holder Since: June 7, 2011



B36 Shop & Field Positive Material Identification (PMI) Results

2303-8th Street, Nisku Alberta, T9E-7Z3 CANADA

This section does not apply



B37 UT report

2303-8th Street, Nisku Alberta, T9E-7Z3 CANADA

CUSTOM PIPE SERVICES INC.

6101 - 46A Street Leduc, AB T9E 7A6
Bus: 780-986-5066 Fax: 780-986-8520 Email: info@cpsinspection.com

Ultrasonic Weld Inspection Report

Report: 7W1037 Page: 1 of 1
Date: Aug 21/2013 Time: pm am pm

Customer: 5Blue Job Number: 1108-20
Location: Nisku,Ab Reported to: Joelle
Project: UT Cat "D" Weld Purchase Order :
Code Procedure: ASME Section V Article 4 and/or
Acceptance: ASME Section VIII Div. 1 App. 12 or ASME Section VIII Div. 2 Art. 9.3 and/or
Vessel Size: Diameter: Nominal Thickness: Shell: 5/8" Head: n/a
Minimum Thickness Measured: Shell: 0.634" Head: n/a
Material: P1 Surface Condition: Clean PWHT: Before Hydro: Before
Flaw Detector: Make: GE Inspection Model: USN58L Serial No: 01PFBF Cal. Due: Feb01/2014
Calibration Blocks: To ASME Fig. T434.2.1 T= 5/8" or
Test Sensitivity: 3/4 T Hole @ 80% FSH Plus 6 dB To Obtain Working Sensitivity. Couplant: Sono Tech Ut-x

Transducer	S/N	Frequency	Cable	Size	Range
GB 0	55602	5 MHz	2X6'	10 mm	3"
GB 60	56227	4 MHz	6'	10 mm	f/c
GB 70	77088	4 MHz	6'	10 mm	f/c

Transducer	S/N	Frequency	Cable	Size	Range

Test Procedure: UT-3 Rev 6 Weld Type: Nozzle Weld: x Long Seams: Circ. Seams:
Surface Inspected From: OD Limitations:

Weld I.D.		Welder ID	Result		
N1	Cat "D" Weld	U	Accept		

If repairs are required, See attached Sheet for details.
Comments:

Operator: Shahzad Aslam Signature: CGSB Level: II#12786 SNT Level: II
Assistant: Javed CGSB Level: SNT Level: Man Crew: 1 Hours Reg.: 1/2 hr
Client Representative: JOELLE DERY-BROCHU Mileage: Hours O.T.:
QUALITY CONTROL
(780)955-2040 E:241

CUSTOM PIPE SERVICES INC.

6101 - 46A Street Leduc, AB T9E 7A6
Bus: 780-986-5066 Fax: 780-986-8520 Email: info@cpsinspection.com

Ultrasonic Weld Inspection Report

Report: 3W 0239 Page: 1 of 1
Date: 16-Aug-13 Time: 4:00 am pm

Customer: 5Blue Process Equipment Inc. Job Number: 5B1108-20
Location: 2303-8th Street - Nisku, Alberta Reported to: Joelle Dery-Brochu
Project: Ultrasonic Weld Examination of Nozzle Welds Purchase Order :
Code Procedure: ASME Section V Article 4 and/or
Acceptance: ASME Section VIII Div. 1 App. 12 or ASME Section VIII Div. 2 Art. 9.3 and/or
Vessel Size: Diameter: 120" OD Nominal Thickness: Shell: 0.625" Head:
Minimum Thickness Measured: Shell: 0.637" Head:
Material: SA-516-70N Surface Condition: Clean PWHT: Before Hydro: Before
Flaw Detector: Make: Krautkramer Model: USN 58L Serial No: 01PDJ0 Cal. Due: 10-Jan-14
Calibration Blocks: To ASME Fig. T434.2.1 T= STD-6-⅝" or
Test Sensitivity: 3/4 T Hole @ 80% FSH Plus 6 dB To Obtain Working Sensitivity Couplant: Sono 600

Transducer	S/N	Frequency	Cable	Size	Range
TC 10-5	55606	5 MHz	6'	10mm	6"
GB SS 60°	44163	4 MHz	6'	10mm	fv
GB SS 70°	54839	4 MHz	6'	10mm	fv

Transducer	S/N	Frequency	Cable	Size	Range

Test Procedure: UT-3 Rev. 6 Weld Type: Nozzle Weld: x Long Seams: Circ. Seams:
Surface Inspected From: OD Limitations: none

Weld I.D.	Welder ID	Results	Weld I.D.		Results
N2	U	Accept			

If repairs are required, See attached Sheet for details.

Comments:

Operator: S. Aslam Signature: 16 AUG 13 CGSB Level: II# 12786 SNT Level: II
Assistant: S. Robinson CGSB Level: II SNT Level: II Man Crew: 1 man Hours Reg.: ½ hour
Client Representative: JOELLE DERY-BROCHU Mileage: Hours O.T.:
QUALITY CONTROL
(780)955-2040 E:241

CUSTOM PIPE SERVICES INC.

6101 - 46A Street Leduc, AB T9E 7A6
Bus: 780-986-5066 Fax: 780-986-8520 Email: info@cpsinspection.com

Ultrasonic Weld Inspection Report

Report: 5W2006 Page: 1 of 1
Date: 9-Aug-13 Time: ____ am pm

Customer: 5-Blue Job Number: 1108-20
Location: Nisku Reported to: Joelle
Project: UT Cat 'D' Welds Purchase Order :
Code Procedure: ASME Section V Article 4 and/or
Acceptance: ASME Section VIII Div. 1 App. 12 or ASME Section VIII Div. 2 Art. 9.3 and/or
Vessel Size: Diameter: 66" ID Nominal Thickness: Shell: 5/8" Head: 5/8"
Minimum Thickness Measured: Shell: .626" Head: .620"
Material: P1 Surface Condition: Clean PWHT: Before Hydro: Before
Flaw Detector: Make: Krautkramer Model: USN58L Serial No: 01JLRK Cal. Due: April 2014
Test Procedure (angle beam): UT-3 Rev. 6 Test Sensitivity: 3/4t hole @ 80% +6dB Scanning Sensitivity
Calibration Blocks: To ASME Fig. T434.2.1 T= 5/8" Couplant: UT-X

Transducer	S/N	Frequency	Cable	Size	Range
0°	51941	5 Mhz	6'	10mm	3"
70°	41872	4 Mhz	6'	10mm	f/c

Transducer	S/N	Frequency	Cable	Size	Range

Surface Inspected From: I.D/O.D Weld Type: Nozzle Weld: x Long Seams: ____ Circ. Seams: ____

Weld I.D.	Welder I.D	Results	Weld I.D.		Results
N6B	U	Accept			
N7B	U	Accept			
N4	U	Accept			

Limitations:
Comments:
Operator: John Van Leest Signature: CGSB Level: II#6567 SNT Level: II
Assistant: Dennis G. CGSB Level: SNT Level: Man Crew: 2 Hours Reg.: 1/2
Client Representative: ANDREW NGO Mileage: Hours O.T.:
QUALITY CONTROL
TEL:780-955-2040
AUG 0 9 2013

CUSTOM PIPE SERVICES INC.

6101 - 46A Street Leduc, AB T9E 7A6
Bus: 780-986-5066 Fax: 780-986-8520 Email: info@cpsinspection.com

Ultrasonic Weld Inspection Report

Report: 3W 0225 Page: 1 of 1
Date: 7-Aug-13 Time: 10:00 am pm

Customer: 5Blue Process Equipment Inc. Job Number: 5B1108-20
Location: 2303-8th Street - Nisku, Alberta Reported to: Joelle Dery-Brochu
Project: Ultrasonic Weld Examination of Nozzle Welds Purchase Order :
Code Procedure: ASME Section V Article 4 and/or
Acceptance: ASME Section VIII Div. 1 App. 12 or ASME Section VIII Div. 2 Art. 9.3 and/or
Vessel Size: Diameter: 66" ID Nominal Thickness: Shell: 0.625" Head:
Minimum Thickness Measured: Shell: 0.629" Head:
Material: SA-516-70N Surface Condition: Clean PWHT: Before Hydro: Before
Flaw Detector: Make: Krautkramer Model: USN 58L Serial No: 01PDJ0 Cal. Due: 10-Jan-14
Calibration Blocks: To ASME Fig. T434.2.1 T= STD-6-⅝ or
Test Sensitivity: 3/4 T Hole @ 80% FSH Plus 6 dB To Obtain Working Sensitivity Couplant: Sono 600

Transducer	S/N	Frequency	Cable	Size	Range
TC 10-5	55606	5 MHz	6'	10mm	6"
GB SS 60°	44163	4 MHz	6'	10mm	fv
GB SS 70°	54839	4 MHz	6'	10mm	fv

Transducer	S/N	Frequency	Cable	Size	Range

Test Procedure: UT-3 Rev. 6 Weld Type: Nozzle Weld: x Long Seams: Circ. Seams:
Surface Inspected From: OD Limitations: none

Weld I.D.	Welder ID	Results	Weld I.D.		Results
N5	U	Accept			
N8	U	Accept			
N9	U	Accept			
N10	U	Accept			
N11	U	Accept			

If repairs are required, See attached Sheet for details.
Comments:

Operator: S. Robinson Signature: 7 AUG 13 CGSB Level: II# 12786 SNT Level: II
Assistant: S. Aslam CGSB Level: II SNT Level: II Man Crew: 2 man Hours Reg.: 1 hour
Client Representative: ANDREW NGO Mileage: Hours O.T.:
QUALITY CONTROL
TEL: 780-955-2040
AUG 07 2013

CUSTOM PIPE SERVICES INC.

6101 - 46A Street Leduc, AB T9E 7A6
Bus: 780-986-5066 Fax: 780-986-8520 Email: info@cpsinspection.com

Ultrasonic Weld Inspection Report

Report: **7W1060** Page: 1 of 1
Date: Sept 03/2013 Time: pm am pm

Customer: 5Blue Job Number: 1108-20
Location: Nisku,Ab Reported to: Joelle
Project: UT Cat "D" Weld Purchase Order :
Code Procedure: ASME Section V Article 4 and/or
Acceptance: ASME Section VIII Div. 1 App. 12 or ASME Section VIII Div. 2 Art. 9.3 and/or
Vessel Size: Diameter: Nominal Thickness: Shell: 5/8" Head: n/a
Minimum Thickness Measured: Shell: 0.634" Head: n/a
Material: P1 Surface Condition: Clean PWHT: Before Hydro: Before
Flaw Detector: Make: GE Inspection Model: USN58L Serial No: 01PFBF Cal. Due: Feb01/2014
Calibration Blocks: To ASME Fig. T434.2.1 T= 5/8" or
Test Sensitivity: 3/4 T Hole @ 80% FSH Plus 6 dB To Obtain Working Sensitivity. Couplant: Sono Tech Ut-x

Transducer	S/N	Frequency	Cable	Size	Range
GB 0	55602	5 MHz	2X6'	10 mm	3"
GB 60	56227	4 MHz	6'	10 mm	f/c
GB 70	77088	4 MHz	6'	10 mm	f/c

Transducer	S/N	Frequency	Cable	Size	Range

Test Procedure: UT-3 Rev 6 Weld Type: Nozzle Weld: x Long Seams: Circ. Seams:
Surface Inspected From: OD Limitations:

Weld I.D.		Welder ID	Result		
M1	Cat "D" Weld	U	Accept		
N3	Cat "D" Weld	U	Accept		
N7A	Cat "D" Weld	U	Accept		

If repairs are required, See attached Sheet for details.
Comments:

Operator: Shahzad Aslam Signature: CGSB Level: II#12786 SNT Level: II
Assistant: J.V CGSB Level: SNT Level: Man Crew: 2 Hours Reg.: 1/2 hr
Client Representative: JOELLE DERY-BROCHU Mileage: Hours O.T.:
QUALITY CONTROL
(780)955-2040 E:241

CUSTOM PIPE SERVICES INC.

6101 - 46A Street Leduc, AB T9E 7A6
Bus: 780-986-5066 Fax: 780-986-8520 Email: info@cpsinspection.com

Ultrasonic Weld Inspection Report

Report: 3W 0257 Page: 1 of 1
Date: 27-Aug-13 Time: 11:00 am / pm

Customer: 5Blue Process Equipment Inc. Job Number: 1108-20
Location: 2303-8th Street - Nisku, Alberta Reported to: Joelle Dery-Brochu
Project: Ultrasonic Weld Examination of Nozzle Welds Purchase Order :
Code Procedure: ASME Section V Article 4 and/or
Acceptance: ASME Section VIII Div. 1 App. 12 or ASME Section VIII Div. 2 Art. 9.3 and/or
Vessel Size: Diameter: 66" ID Nominal Thickness: Shell: 0.625" Head:
Minimum Thickness Measured: Shell: 0.628" Head:
Material: SA-516-70N Surface Condition: Clean PWHT: Before Hydro: Before
Flaw Detector: Make: Krautkramer Model: USN 58L Serial No: 01PDJ0 Cal. Due: 10-Jan-14
Calibration Blocks: To ASME Fig. T434.2.1 T= STD-6-1" or
Test Sensitivity: 3/4 T Hole @ 80% FSH Plus 6 dB To Obtain Working Sensitivity Couplant: Sono 600

Transducer	S/N	Frequency	Cable	Size	Range
TC 10-5	55606	5 MHz	6'	10mm	6"
GB SS 60°	44163	4 MHz	6'	10mm	fv
GB SS 70°	54839	4 MHz	6'	10mm	fv

Transducer	S/N	Frequency	Cable	Size	Range

Test Procedure: UT-3 Rev. 6 Weld Type: Nozzle Weld: x Long Seams: Circ. Seams:
Surface Inspected From: OD Limitations: none

Weld I.D.	Welder ID	Results	Weld I.D.		Results
N12A	U	Accept			
N12B	U	Accept			
N13	U	Accept			
N6A	U	Accept			

If repairs are required, See attached Sheet for details.

Comments:

Operator: S. Robinson Signature: 27 AUG 13 CGSB Level: II# 15266 SNT Level: II
Assistant: C. Webster CGSB Level: I SNT Level: I Man Crew: 2 man Hours Reg.: ½ hour
Client Representative: ANDREW NGO Mileage: Hours O.T.:

QUALITY CONTROL
TEL: 780-955-2040
AUG 27 2013

B38 Shop Dry Out Procedure

2303-8th Street, Nisku Alberta, T9E-7Z3 CANADA

This section does not apply

5Blue
Process Equipment Inc.

B40 Insulation and Jacketing Inspection and Acceptance Report

2303-8th Street, Nisku Alberta, T9E-7Z3 CANADA

CJ METAL ERECTORS LTD

2304 – 4th Street, Nisku, Alberta T9E 7W5
Phone: 780-955-7023 Fax: 780-955-6337

INSULATION INSPECTION REPORT

CUSTOMER: *5 Blue Process Equipment Inc.*	**JOB:** *5B1108-80* **PO:** *P8480-5B1108-80, P8483A-5B1109-80, P9344-5B1108-80*
CLIENT: *Devon NEC Corporation, Ferrier Central Processing Facility*	**ITEM:** *Piping* **REFERENCE:** *N/A*
SPECIFICATION: *Devon Canada Corporation Thermal Insulation GS-6300*	**C.J. METAL JOB #:** *30459* **QUOTE #:** *13-1217A-DL, 14-0109A-DL & 14-0313E-DL*

ITEM	DESCRIPTION	AS SPECIFIED / SIGN-OFF		
Materials		C. J. Metal	Customer	Inspector
1. Insulation type	*Mineral Wool*	JB		DD
2. Insulation thickness	*As per PID & Spool Listing*	JB		DD
3. Cladding type	*Stucco Embossed aluminum, c/w PSMB*	JB		DD
4. Cladding thickness	*.024*	JB		DD
5. Screws	*#8 x 1/2" S/S Robertson Panhead, c/w washers*	JB		DD
6. Banding	*¾" stainless steel, c/w stainless steel wing clips*	JB		DD
8. Sealant	*Aluminum colored silicone*	JB		DD
11. Other Items	*Removable Insulation Blankets*	JB		DD
12. Installation as per	*Devon Canada Corporation Thermal Insulation GS-6300, minus any deviations and / or exemptions as mentioned in the estimate*	JB		DD

Comments / Other:

The above items have been checked and installed in accordance with the client's specifications.

C. J. Metal Erectors Ltd.	CUSTOMER	INSPECTOR / CLIENT
Name: Jonathan Boyle	Name: Joelle Deer	Name: Dande Groat
Signature: Jonathan Boyle	Signature: Joelle Deer	Signature:
Date: July 9, 2014	Date: 14 July 2014	Date: July 14/14

☐ Documentation attached (if required)



B42 NDE / NDT Test Reports (not mentioned elsewhere)

2303-8th Street, Nisku Alberta, T9E-7Z3 CANADA

This section does not apply



B46 Welder Log & Statistics

2303-8th Street, Nisku Alberta, T9E-7Z3 CANADA

Job # 5B1108-20 (Cardium Gas Separator (002-V-01-1610)

Pre / Post PWHT	Item	Size	Welder ID	QC'd	NDE Type	NDE Date	Rpt #	Comment
n/a	LS1	48" L x 0.625" T	U/X	AN	RT	08-Aug-13	C4766	
n/a	LS2	96" L x 0.625" T	U/X	AN	RT	08-Aug-13	C4766	
n/a	CS1	67.25" OD x 0.625" T	A/X	JDB	RT	26-Aug-13	C5099	
n/a	CS1-R1	67.25" OD x 0.625" T	U	JDB	RT	27-Aug-13	C5135	MIG P@100", 106" to 112" and @123" to 146"
n/a	CS2	67.25" OD x 0.625" T	A/X	JDB	RT	26-Aug-13	C5100	
n/a	CS2-R1	67.25" OD x 0.625" T	U	JDB	RT	27-Aug-13	C5135	IU & LF@41" to 45" also LF@140½" to 142" & @ 162" & 196"
n/a	CS3	67.25" OD x 0.625" T	A/X	JDB	RT	26-Aug-13	C5101	
n/a	N1 - Cat D	16" CL 150	U	JDB	UT	21-Aug-13	7W1037	
n/a	N2 - Cat D	16" CL 150	U	JDB	UT	16-Aug-13	3W0239	
n/a	N3 - Cat C	4" Sch 160	U	JDB	RT	02-Aug-13	C4715	
n/a	N3 - Cat D	4" Sch 160	U	JDB	UT	04-Sep-13	7W1060	
n/a	N4 - BW1	2" Sch 160	C	JDB	RT	02-Aug-13	C4715	
n/a	N4 - BW2	2" Sch 160	C	JDB	RT	02-Aug-13	C4715	
n/a	N4 - BW3	2" Sch 160	U	JDB	RT	28-Aug-13	C5167	
n/a	N4 - Cat D	2" Sch 160	U	JDB	UT	09-Aug-13	5W2006	
n/a	N5 - Cat D	6" CL 150	U	AN	UT	07-Aug-13	3W0225	
n/a	N6A - Cat D	2" CL 300	U	JDB	UT	27-Aug-13	3W0257	
n/a	N6B - Cat D	2" CL 300	U	JDB	UT	09-Aug-13	5W2006	
n/a	N7A - Cat D	2" CL 300	U	JDB	UT	04-Sep-13	7W1060	
n/a	N7B - Cat D	2" CL 300	U	JDB	UT	09-Aug-13	5W2006	
n/a	N8 - Cat D	2" CL 300	U	AN	UT	07-Aug-13	3W0225	
n/a	N9 - Cat D	2" CL 300	U	AN	UT	07-Aug-13	3W0225	
n/a	N10 - Cat D	2" CL 300	U	AN	UT	07-Aug-13	3W0225	
n/a	N11 - Cat D	4" CL 150	U	AN	UT	07-Aug-13	3W0225	
n/a	N12A - Cat D	4" CL 150	U	JDB	UT	27-Aug-13	3W0257	
n/a	N12B - Cat D	4" CL 150	U	JDB	UT	27-Aug-13	3W0257	
n/a	N13 - Cat D	2" CL 300	U	JDB	UT	27-Aug-13	3W0257	
n/a	M1 - Cat D	20" CL 150	U	JDB	UT	04-Sep-13	7W1060	
n/a	Lift Lugs x 2	10" L x 1" T	U	JDB	MT	09-Sep-13	7N2666	

| | | |

Tag	Control #	Weld #	Type	Size	Class	Welder	QC By	Date Insp	Weld ID	RT Rpt #	MT Rpt #		Hydro	PWHT	Int Coat	Comment
88	2F	7	BW	2" Sch 80	A11	J	AN	09-Sep-13	2F-7				428	N	N	
	2F	8	BW	2" Sch 80	A11	J	AN	09-Sep-13	2F-8				428	N	N	
	2F	9	FW	1" 3M	A11	J	AN	09-Sep-13	2F-9				428	N	N	
	2F	10	FW	0.75" 3M	A11	J	AN	09-Sep-13	2F-10				428	N	N	
	2F	11	BW	2" Sch 80	A11	J	AN	09-Sep-13	2F-11				428	N	N	
118	2G	12	BW	2" Sch 80	A11	J	AN	09-Sep-13	2G-12				428	N	N	
	2G	13	FW	0.75" 3M	A11	J	AN	09-Sep-13	2G-13		5N2740		428	N	N	
	2G	14	BW	2" Sch 80	A11	J	AN	09-Sep-13	2G-14				428	N	N	
93	2H	15	BW	2" Sch 80	A11	J	AN	11-Sep-13	2H-15				428	N	N	
	2H	16	BW	2" Sch 80	A11	J	AN	11-Sep-13	2H-16				428	N	N	
	2H	17	BW	2" Sch 80	A11	J	AN	11-Sep-13	2H-17				428	N	N	
	2H	18	BW	2" Sch 80	A11	J	AN	11-Sep-13	2H-18				428	N	N	
	2H	19	BW	2" Sch 80	A11	J	AN	11-Sep-13	2H-19				428	N	N	
	2H	20	BW	2" Sch 80	A11	J	AN	11-Sep-13	2H-20				428	N	N	
	2H	21	BW	2" Sch 80	A11	J	AN	11-Sep-13	2H-21				428	N	N	
	2H	22	BW	2" Sch 80	A11	J	AN	11-Sep-13	2H-22				428	N	N	
	2H	23	BW	2" Sch 80	A11	J	AN	11-Sep-13	2H-23				428	N	N	
	2H	S24	Shoe	1/8" (2 x 2.5")	A11	J	AN	11-Sep-13	2H-S24				428	N	N	
58	3A	1	BW	16" Sch Std	A11	Z	AN	04-Sep-13	3A-1				428	N	N	
	3A	2	BW	14" Sch Std	A11	Z	AN	04-Sep-13	3A-2				428	N	N	
	3A	3	BW	14" Sch Std	A11	Z	AN	04-Sep-13	3A-3	C5241			428	N	N	
136	3B	4	BW	14" Sch Std	A11	Z	AN	06-Sep-13	3B-4				428	N	N	
	3B	5	BW	14" Sch Std	A11	Z	AN	06-Sep-13	3B-5				428	N	N	
	3B	6	BW	14" Sch Std	A11	Z	AN	06-Sep-13	3B-6				428	N	N	
	3B	7	FW	0.75" 3M	A11	Z	AN	06-Sep-13	3B-7				428	N	N	
	3B	8	BW	14" Sch Std	A11	Z	AN	06-Sep-13	3B-8				428	N	N	
	3B	9	BW	14" Sch Std	A11	Z	AN	06-Sep-13	3B-9				428	N	N	
	3B	10	FW	2" Sch 80	A11	Z	AN	06-Sep-13	3B-10				428	N	N	
	3B	11	BW	2" Sch 80	A11	Z	AN	06-Sep-13	3B-11				428	N	N	
	3B	12	BW	14" Sch Std	A11	Z	AN	06-Sep-13	3B-12				428	N	N	
143	3C	1	BW	14" Sch Std	A11	Z	AN	10-Sep-13	3C-1				428	N	N	
	3C	2	BW	14" Sch Std	A11	Z	AN	10-Sep-13	3C-2				428	N	N	
	3C	3	FW	1" 3M	A11	Z	AN	10-Sep-13	3C-3		5N2740		428	N	N	
	3C	4	BW	14" Sch Std	A11	Z	AN	10-Sep-13	3C-4				428	N	N	
	3C	5	BW	12" Sch Std	A11	Z	AN	10-Sep-13	3C-5				428	N	N	
	3C	S17	Dleg	14"	A11	Z	AN	10-Sep-13	3C-S17				428	N	N	
31	3D	6	BW	12" Sch Std	A11	Z	AN	09-Sep-13	3D-6				428	N	N	
	3D	7	BW	12" Sch Std	A11	Z	AN	09-Sep-13	3D-7	C5291			428	N	N	
39	4A	1	BW	2" Sch 80	A11	C	AN	06-Sep-13	4A-1	C5276			428	N	N	
	4A	2	BW	2" Sch 80	A11	C	AN	06-Sep-13	4A-2				428	N	N	
102	4B	3	BW	2" Sch 80	A11	C	AN	06-Sep-13	4B-3				428	N	N	
	4B	4	FW	1" 3M	A11	C	AN	06-Sep-13	4B-4		5N2740		428	N	N	
	4B	5	BW	2" Sch 80	A11	C	AN	06-Sep-13	4B-5				428	N	N	
	4B	6	BW	2" Sch 80	A11	C	AN	06-Sep-13	4B-6				428	N	N	
	4B	7	FW	0.75" 3M	A11	C	AN	06-Sep-13	4B-7				428	N	N	
	4B	8	FW	0.75" 3M	A11	C	AN	06-Sep-13	4B-8				428	N	N	
	4B	9	FW	1" 3M	A11	C	AN	06-Sep-13	4B-9				428	N	N	
	4B	10	BW	2" Sch 80	A11	C	AN	06-Sep-13	4B-10				428	N	N	
	4B	11	BW	2" Sch 80	A11	C	AN	06-Sep-13	4B-11				428	N	N	
	4B	12	BW	2" Sch 80	A11	C	AN	06-Sep-13	4B-12	C5276			428	N	N	
	4B	S20	Shoe	1/8" (2 x 2.5")	A11	C	AN	06-Sep-13	4B-S20				428	N	N	
	5A	1	BW	6" Sch Std	A11	J	AN	16-Oct-13	5A-1				428	N	N	
	5A	2	BW	6" Sch Std	A11	J	AN	16-Oct-13	5A-2				428	N	N	
	5B	3	BW	6" Sch Std	A11	H	AN	16-Oct-13	5B-3				428	N	N	
	5B	4	BW	6" Sch Std	A11	H	AN	16-Oct-13	5B-4				428	N	N	
	5B	S14	Dleg	6"	A11	H	AN	16-Oct-13	5B-S14		a		428	N	N	

Tag	Control #	Weld #	Type	Size	Class	Welder	QC By	Date Insp	Weld ID	RT Rpt #	MT Rpt #		Hydro	PWHT	Int Coat	Comment
	6A	1	BW	8" Sch Std	A11	H	AN	16-Oct-13	6A-1				428	N	N	
	6A	2	BW	10" Sch Std	A11	H	AN	16-Oct-13	6A-2				428	N	N	
	6A	3	FW	0.75" Sch 160	A11	H	AN	16-Oct-13	6A-3				428	N	N	
	6A	4	BW	2" Sch 80	A11	H	AN	16-Oct-13	6A-4				428	N	N	
	6A	5	FW	4" Sch Std	A11	H	AN	16-Oct-13	6A-5				428	N	N	
	6A	6	BW	4" Sch Std	A11	H	AN	16-Oct-13	6A-6				428	N	N	
	6A	15	BW	10" Sch Std	A11	H	AN	16-Oct-13	6A-15				428	N	N	
	6B	7	BW	4" Sch Std	A11	H	AN	16-Oct-13	6B-7	C6035			428	N	N	
	6B	8	FW	0.75" 3M	A11	H	AN	16-Oct-13	6B-8				428	N	N	
	6B	9	BW	4" Sch Std	A11	H	AN	16-Oct-13	6B-9				428	N	N	
	6B	10	BW	3" Sch Std	A11	H	AN	16-Oct-13	6B-10				428	N	N	
	6B	11	BW	4" Sch Std	A11	H	AN	16-Oct-13	6B-11				428	N	N	
	6B	12	FW	0.75" 3M	A11	H	AN	16-Oct-13	6B-12				428	N	N	
	6B	13	BW	4" Sch Std	A11	H	AN	16-Oct-13	6B-13				428	N	N	
	6B	14	FW	0.75" 3M	A11	H	AN	16-Oct-13	6B-14				428	N	N	
132	7A	1	BW	2" Sch 80	A11	C	AN	04-Sep-13	7A-1				428	N	N	
	7A	2	BW	2" Sch 80	A11	C	AN	04-Sep-13	7A-2				428	N	N	
	7A	3	BW	2" Sch 80	A11	C	AN	04-Sep-13	7A-3				428	N	N	
	7A	4	BW	2" Sch 80	A11	C	AN	04-Sep-13	7A-4	C5241			428	N	N	
37	7B	5	BW	2" Sch 80	A11	C	AN	04-Sep-13	7B-5	C5241			428	N	N	
	7B	18	BW	2" Sch 80	A11	J	AN	04-Oct-13	7B-18	C5795			428	N	N	
	7D	6	BW	2" Sch 80	A11	J	AN	04-Sep-13	7D-6	C5795			428	N	N	
	7D	7	BW	2" Sch 80	A11	C	AN	04-Sep-13	7D-7				428	N	N	
	7D	8	BW	2" Sch 80	A11	C	AN	04-Sep-13	7D-8				428	N	N	
	7D	9	BW	2" Sch 80	A11	C	AN	04-Sep-13	7D-9				428	N	N	
	7D	10	BW	2" Sch 80	A11	C	AN	04-Sep-13	7D-10				428	N	N	
	7D	11	BW	2" Sch 80	A11	C	AN	04-Sep-13	7D-11				428	N	N	
	7D	12	BW	2" Sch 80	A11	C	AN	04-Sep-13	7D-12				428	N	N	
	7D	13	BW	2" Sch 80	A11	C	AN	04-Sep-13	7D-13				428	N	N	
	7D	14	BW	2" Sch 80	A11	C	AN	04-Sep-13	7D-14				428	N	N	
	7D	15	BW	2" Sch 80	A11	C	AN	04-Sep-13	7D-15				428	N	N	
	7D	16	BW	2" Sch 80	A11	C	AN	04-Sep-13	7D-16				428	N	N	
	7D	17	BW	2" Sch 80	A11	C	AN	04-Sep-13	7D-17				428	N	N	
	7D	S13	Dleg	2"	A11	C	AN	04-Sep-13	7D-S13				428	N	N	
72	7C	1	BW	2" Sch 80	A11	J	AN	25-Oct-13	7C-1				428	N	N	
	7C	2	BW	2" Sch 80	A11	C	AN	06-Sep-13	7C-2				428	N	N	
	7C	3	BW	2" Sch 80	A11	C	AN	06-Sep-13	7C-3				428	N	N	
	7C	4	BW	2" Sch 80	A11	C	AN	06-Sep-13	7C-4				428	N	N	
	7C	5	BW	2" Sch 80	A11	C	AN	06-Sep-13	7C-5				428	N	N	
	7C	6	BW	2" Sch 80	A11	C	AN	06-Sep-13	7C-6				428	N	N	
	7C	7	BW	2" Sch 80	A11	J	AN	25-Oct-13	7C-7				428	N	N	
	7C	8	BW	2" Sch 80	A11	C	AN	06-Sep-13	7C-8				428	N	N	
	7C	9	BW	2" Sch 80	A11	C	AN	06-Sep-13	7C-9				428	N	N	
	7C	10	BW	2" Sch 80	A11	C	AN	06-Sep-13	7C-10				428	N	N	
	7C	11	BW	2" Sch 80	A11	C	AN	06-Sep-13	7C-11				428	N	N	
	7C	12	BW	2" Sch 80	A11	J	AN	25-Oct-13	7C-12				428	N	N	
	7C	13	FW	0.75" 3M	A11	C	AN	06-Sep-13	7C-13		5N2740		428	N	N	
	7C	14	BW	2" Sch 80	A11	C	AN	06-Sep-13	7C-14	C5276			428	N	N	
	7C	S22	Dleg	2"	A11	C	AN	06-Sep-13	7C-S22				428	N	N	
145	8A	1	BW	2" Sch 80	AL11	H	AN	04-Sep-13	8A-1				428	N	N	
	8A	2	BW	2" Sch 80	AL11	H	AN	04-Sep-13	8A-2	C5241			428	N	N	
17	9A	1	SW	1.5" Sch 80	A11a	H	AN	04-Sep-13	9A-1		7N2667		428	N	N	
	9A	2	BW	2" Sch 80	A11a	H	AN	04-Sep-13	9A-2				428	N	N	
	9A	3	BW	2" Sch 80	A11a	H	AN	04-Sep-13	9A-3				428	N	N	
	9A	4	BW	2" Sch 80	A11a	H	AN	04-Sep-13	9A-4				428	N	N	
	9A	S8	Shoe	1/4" (2" - 4")	A11a	H	AN	04-Sep-13	9A-S8		a		428	N	N	

Tag	Control #	Weld #	Type	Size	Class	Welder	QC By	Date Insp	Weld ID	RT Rpt #	MT Rpt #		Hydro	PWHT	Int Coat	Comment
24	10A	1	SW	1.5" Sch 80	A11a	H	AN	05-Sep-13	10A-1		7N2667		428	N	N	
	10A	2	BW	2" Sch 80	A11a	H	AN	05-Sep-13	10A-2				428	N	N	
	10A	3	BW	2" Sch 80	A11a	H	AN	05-Sep-13	10A-3				428	N	N	
	10A	4	BW	2" Sch 80	A11a	H	AN	05-Sep-13	10A-4	C5276			428	N	N	
	10A	S8	Shoe	1/4" (2" - 4")	A11a	H	AN	05-Sep-13	10A-S8				428	N	N	
101	11A	1	BW	2" Sch 80	AU11	H	AN	05-Sep-13	11A-1				428	N	N	
	11A	2	BW	2" Sch 80	AU11	H	AN	05-Sep-13	11A-2				428	N	N	
116	12A	1	BW	2" Sch 80	AU11	H	AN	05-Sep-13	12A-1				428	N	N	
	12A	2	BW	2" Sch 80	AU11	H	AN	05-Sep-13	12A-2				428	N	N	
109	13A	1	BW	2" Sch 80	A11	J	AN	10-Sep-13	13A-1				428	N	N	
	13A	2	FW	0.75" 3M	A11	J	AN	10-Sep-13	13A-2		5N2740		428	N	N	
	13A	3	BW	4" Sch Std	A11	J	AN	10-Sep-13	13A-3				428	N	N	
	13A	4	BW	4" Sch Std	A11	J	AN	10-Sep-13	13A-4				428	N	N	
	13A	5	BW	4" Sch Std	A11	J	AN	10-Sep-13	13A-5				428	N	N	
	13A	6	BW	2" Sch 80	A11	J	AN	10-Sep-13	13A-6				428	N	N	
	13A	7	FW	0.75" 3M	A11	J	AN	10-Sep-13	13A-7				428	N	N	
	13A	8	BW	4" Sch Std	A11	J	AN	10-Sep-13	13A-8	C5315			428	N	N	
	14A	1	BW	2" Sch 80	A11	B	JDB	09-Oct-13	14A-1	C5886			428	N	N	
	14A	2	BW	4" Sch Std	A11	B	JDB	09-Oct-13	14A-2				428	N	N	
	14A	3	BW	4" Sch Std	A11	B	JDB	09-Oct-13	14A-3				428	N	N	
	14A	4	BW	4" Sch Std	A11	B	JDB	09-Oct-13	14A-4				428	N	N	
	14A	5	BW	2" Sch 80	A11	B	JDB	09-Oct-13	14A-5				428	N	N	
	14A	6	BW	4" Sch Std	A11	B	JDB	09-Oct-13	14A-6				428	N	N	
	14A	7	FW	4" Sch Std	A11	B	JDB	09-Oct-13	14A-7				428	N	N	
	14A	8	FW	4" Sch Std	A11	B	JDB	09-Oct-13	14A-8				428	N	N	
	15A	1	SW	1 1/2" XS	A11a	M	AS	05-Dec-13	15A-1				428	N	N	
	15A	2	SW	1 1/2" XS	A11a	M	AS	05-Dec-13	15A-2				428	N	N	
	15A	3	SW	1 1/2" XS	A11a	M	AS	05-Dec-13	15A-3		3N3644		428	N	N	
	15A	4	SW	1 1/2" XS	A11a	M	AS	05-Dec-13	15A-4		3N3644		428	N	N	
	15A	5	SW	1 1/2" XS	A11a	M	AS	05-Dec-13	15A-5				428	N	N	
	15A	6	SW	1 1/2" XS	A11a	M	AS	05-Dec-13	15A-6				428	N	N	
	15A	7	SW	1 1/2" XS	A11a	M	AS	05-Dec-13	15A-7				428	N	N	
	15A	8	SW	1 1/2" XS	A11a	M	AS	05-Dec-13	15A-8				428	N	N	
	15A	9	SW	1 1/2" XS	A11a	M	AS	05-Dec-13	15A-9				428	N	N	
	15A	10	SW	1 1/2" XS	A11a	M	AS	05-Dec-13	15A-10				428	N	N	
	15A	11	SW	1 1/2" XS	A11a	M	AS	05-Dec-13	15A-11				428	N	N	
	15A	12	SW	1 1/2" XS	A11a	M	AS	05-Dec-13	15A-12				428	N	N	
	15A	13	SW	1 1/2" XS	A11a	M	AS	05-Dec-13	15A-13				428	N	N	
	16A	1	SW	1 1/2" XS	A11a	O	AS	05-Dec-13	16A-1				428	N	N	
	16A	2	SW	1 1/2" XS	A11a	O	AS	05-Dec-13	16A-2		3N3644		428	N	N	
	16A	3	SW	1 1/2" XS	A11a	O	AS	05-Dec-13	16A-3	C7079			428	N	N	
	16A	4	SW	1 1/2" XS	A11a	O	AS	05-Dec-13	16A-4	C7079			428	N	N	
	16A	5	SW	1 1/2" XS	A11a	O	AS	05-Dec-13	16A-5		3N3644		428	N	N	
	16A	6	SW	1 1/2" XS	A11a	O	AS	05-Dec-13	16A-6				428	N	N	
	16A	7	SW	1 1/2" XS	A11a	O	AS	05-Dec-13	16A-7				428	N	N	
	16A	8	SW	1 1/2" XS	A11a	O	AS	05-Dec-13	16A-8				428	N	N	
	16A	9	SW	1 1/2" XS	A11a	O	AS	05-Dec-13	16A-9				428	N	N	
	16A	10	SW	1 1/2" XS	A11a	O	AS	05-Dec-13	16A-10				428	N	N	
	16A	11	SW	1 1/2" XS	A11a	O	AS	05-Dec-13	16A-11				428	N	N	
	16A	12	SW	1 1/2" XS	A11a	O	AS	05-Dec-13	16A-12				428	N	N	
	16A	13	SW	1 1/2" XS	A11a	O	AS	05-Dec-13	16A-13				428	N	N	
	16A	14	SW	1 1/2" XS	A11a	O	AS	05-Dec-13	16A-14				428	N	N	
	16A	15	SW	1 1/2" XS	A11a	O	AS	05-Dec-13	16A-15				428	N	N	
	16A	16	SW	1 1/2" XS	A11a	O	AS	05-Dec-13	16A-16				428	N	N	
	16A	17	SW	1 1/2" XS	A11a	O	AS	05-Dec-13	16A-17				428	N	N	
	16A	18	SW	1 1/2" XS	A11a	O	AS	05-Dec-13	16A-18				428	N	N	

B54 PSV Shop Pop & Blowdown Test Records

2303-8th Street, Nisku Alberta, T9E-7Z3 CANADA

5Blue
Process Equipment Inc.

RECEIVING INSPECTION REPORT

DATE: SEP 2 0 2013 PURCHASE ORDER# 1108-82

CUSTOMER/OWNER Relief Valve

DESCRIPTION OF MATERIAL:	PLATE	TUBE /PIPE	BAR	FITTINGS	

		YES	NO
1	MATERIALS CORRECT TO PURCHASE ORDER:	✓	
2	MTR SUPPLIED WITH MATERIALS	✓	
3	MTR CHECKED AGAINST PACKING SLIP	✓	
4	MTR CORRECT FOR THIS MATERIAL	✓	
5	IS MATERIALS IN GOOD CONDITION (NO DAMAGE):	✓	
6	IS MATERIAL THE SAME SIZE AND SCHEDULE AS REQUIRED ON THE PURCHASE ORDER:	✓	
7	IS MATERIAL THE CORRECT GRADE AS REQUIRED ON THE PURCHASE ORDER	✓	
8	IS THE MATERIAL LEGIBLY MARKED FROM THE SUPPLIER? THIS MAY BE STAMPED or STENCILED (record Grade. Type, Heat # And any other relevant information)	✓	

5 Blue Process Equipment Ltd. SEP 2 0 2013 Quality Department

NOTE: If any of these inspection steps cannot be completed the inspector shall notify the QS ASAP. The QS shall make out a NCR detailing the discrepancies and the material in question shall be quarantined until a satisfactory solution to the problem can be resolved. This may include rework or sending the material back to the supplier

Inspector : _____ Signature: _____ Date SEP 2 0 2013

ROSEMARY KUNTZ
SAFETY / MTR
(780) 955-2040E:226

CORIX®
Control Solutions
Formerly Barber Eng. and Controls

Packing Slip

Packing Slip Number PS87097

Customer Purchase P7729-5B1108-82

Bill Of Lading

Sales Order ID : SO91453
Ship Date : 9/18/2013 8:34:00 AM
Page Number : 1

Bill To :
C12768
5BLUE PROCESS EQUIPMENT INC.
2303 - 8 STREET
NISKU, AB T9E 7Z3

Ship To :
5BLUE PROCESS EQUIPMENT INC.
2303 - 8 STREET
NISKU, AB T9E 7Z3

Order Date: 9/10/2013 1:55:01 PM
Ship Method: Dunrite
Tag Number:
Bill of Lading :

FOB: EDMONTON
Territory: 1 Edmonton Admin Sales

Pallets: 1
Cartons:
Weight: 490

Line / st PO Line Nbr	Item ID / Cust Item ID	Item Name	Req. Date	Req. Qty	Ship Qty
1	47219	6" 1905-30QC-2-CC-MS-31-RF-GS-HP W/ HP BELLOWS CONSOLIDATED RELIEF VALVE	9/16/2013	1.0000 EA	1.0000 EA

Special Instructions: Set 200 PSIG
Tag 002-PSV-01-1610E

Item ID	Serial Numbers
47219	SB74194

5 Blue Process Equipment Inc. SEP 20 2013 Quality Department

RECEIVED 18SEP2013

2 2	70220	GENERAL DOCUMENTATION	9/16/2013	1.0000 EA	1.0000 EA

Special Instructions: MTRs required

Special Instructions for Sales Order: IFE included (spring)

CORIX
Control Solutions
Formerly Barber Eng. and Controls

	Telephone	Fax
Calgary	(403) 252-7651	(403) 252-7799
Edmonton	(780) 468-6950	(780) 469-5093

DOCUMENTATION REQUIREMENTS

Customer: 5Blue Process Equipment Inc.

Customer PO# P7729-5B1108-82

Date: September 18, 2013

Corix SO 91453

Documentation	Tag# / Serial# / Description	# of copies
Valve Test Certificate Material Test Report	Tag:002-PSV-01-1610E Serial No.SB74194 6" 1905-30QC-2-CC-MS-31-RF-GS-HP W/ HP BELLOWS CONSOLIDATED RELIEF VALVE	1

FORM.057.REV. 2

5Blue Process Equipment Inc. SEP 20 2013 Quality Department

CORIX®
Control Solutions
Formerly Barber Eng. and Controls

Consolidated Pressure Safety Valve Test Certificate and Serial Number File

Work Order ID:	SO91453-1
Item ID:	47219
Customer Name:	5Blue Process Equipment Inc.
Customer PO ID:	P7729-5B1108-82
Sales Order Writer:	Dale Haines

As appropriate, ensure all units are specified as per customer's requirements.

Model	6" 1905-30QC-2-CC-MS-31-RF-GS-HP W/ HP BELLOWS CONSOLIDATED RELIEF VALVE				
Size Designation	6	inches	**Test Media**	Air	
Set Pressure	200	psig	**Service Media**	Natural gasa	
CDTP	200	psig	**O Ring Material**	n/a	
Superimposed Min BP	0	psig	**O Ring Durometer**	n/a	
Superimposed Max BP	0	psig	**Province**	AB	
Total Back Pressure	0	psig	**Code Stamp**	UV	
Temperature	60	F	**Code Case**	n/a	
Capacity	47329	SCFM Air ✓			
Tag	002-PSV-01-1610E				
Shop Requirements	MTR /				
Comments					

Serial Number	SB74194	**Spring Number**	0647CR
		Spring Range From	196 **To** 218
Base Heat	B08844-04-025602	**Manufacturers Hydrostatic Test Number:**	
Nozzle Heat	L8971-2-482970/	**Nozzle**	H
Bonnet Heat 0253302	B08269-02-025700/	**Base**	H
Code Case		**Checked By**	DAN

Conversion of Manufacturers Parts

Part Description	**Reworked Dimension**	**Machined By**	**Checked By**
✓	—	—	—

Washer Tolerance Accepted	☑	**EVT Number**	✓
Washer Machined By	Rob	**Gauge Number**	003AB
Stamped/Checked By	DAN		
Assembled By	DAN	**Leakage Rate**	☑ Meets API 527
			OR: _____ bubbles/min
Test Pressure 1	200 PSIG	**Back Pressure Test Performed At**	
Test Pressure 2	200	☑ 30 psig / 205 kPag	
Test Pressure 3	200	☐ 100 psig / 690 kPag	
		☐ Other _____	
Reseat Pressure	180	☐ Not Applicable	
Blowdown	20		
Simmer Point	198		
	—	**Tested By**	GL
Ring Setting Upper	-25	**Stamping Checked By**	GL
Ring Setting Lower		**Test Date:**	10/ sept/13
Liquid Trim Popping Pressure (if applicable)	—	**Witnessed By**	—

5 Blue Process Equipment Inc. SEP 20 2013 Quality Department

Comments BORE 4.046

The valve furnished on the above order has been inspected and found to be in accordance with specifications, drawings, and requirements of this order. Consolidated Pressure Safety Valves are manufactured by Dresser Flow Solutions and assembled by Corix Control Solutions.

Form.105 Rev 12

GENPITFI01\300011185--DMS--1/10/2013 7:13:27 PM--O7151

Add: BINHAI.JIANGSU.CHINA

Tel: 86-515-84134888 Fax: 86-515-84134555

E-mail: ark-2005@vip.163.com Foundry Mark(铸造厂标识): WH

CERTIFIED MATERIAL TEST REPORT
材料检测报告

WANHENG FOUNDRY CO.,LTD.

Conforming to: EN 10204 3.1

CERT. Date(日期) 2013-1-4

CERT. No(报告号) B08844

Rev: A4

Customer Name(客户) DRESSER Co.,LTD

Specification(标准号) ASME SA216-07/ASTM A216-04 Material(材料) WCC

A)Chemical Analysis(化学成分):

B)Mechanical Property(机械性能)

No. 序号	DESC. 品名	Casting P/N铸件号	Heat No. 炉号	Elements元素（%） Remarks: 1. SUM*=Total for specified residual elements suffixed by "*"（后缀"*"的残留元素的总和） 2. CE=C+Mn/6+(Cr+Mo+V)/5+(Ni+Cu)/15													Tensil Str. 抗拉强度	Yield Str. 屈服强度	Elongation in 2 in. 延伸率	Reduction of Area 断面收缩率	Hardness 硬度
				Range	C	Mn	P	S	Si	Cu*	Ni*	Cr*	Mo*	V*	SUM*	CE	MPa	MPa	%	%	HB
				Min.	0	0	0	0	0	0	0	0	0	0	0		485	275	22	35	
				Max.	0.250	1.200	0.040	0.045	0.600	0.300	0.500	0.500	0.200	0.030	1.00		655	∞	∞	∞	234
1	BASE	0256902	B08844		0.190	0.937	0.018	0.013	0.475	0.031	0.033	0.082	0.009	0.006	0.161		583	387	29	57	171

C)Heat Treatment(热处理方式) : Normalization(正火) +Tempering(回火)

One:		Two:	
Temperature(温度) :	890~927 ℃	Temperature(温度) :	621~677 ℃
Holding Time(保温时间) :	）=3 H	Holding Time(保温时间) :	>=2 H
Cooling(冷却) :	Air（空冷）	Cooling(冷却) :	Air（空冷）

D)Dimensional Check and NDT(尺寸检验与无损检测)

Item(项目)	Criteria(标准)	Judge(判定)
Appearance&Size(外观和尺寸)	MSS-SP-55 & Draw	OK
Nondestructive examination on part surface (表面探伤) □PT □MT		
Nondestructive examination for internal defects of casting or weld repair(内部探伤) □RT □UT		

江苏万恒铸业有限公司 Jiangsu Wanheng Casting Industry Co.,Ltd 检验专用章 Test Seal

E)Statements(声明):

We hereby certify that the material and heattreat described herein have been made in accordance with the above specification and All castings appearance meet the requirements called for by MSS-SP-55.

我们在此声明所有铸件材料及热处理均严格按照相关标准生产，外观符合MSS-SP-55标准的要求。

INSPECTOR: 刘松生 QUALITY MANAGER: 刘学

Form No.: DMS/F-20Q-101

5 Blue Process Equipment Inc. SEP 20 2013 Quality Department

Add: South of Cao Hang Town, Minhang District, Shanghai, China

Tel:33505240

E-mail: renweiping@sina.com.cn

DRESSER 2013-08-20 GE DRESSER DMS QC 02

CERTIFIED MATERIAL TEST REPORT
材料检测报告

SIMBT QUNLI (MEILONG) FOUNDRY CO., LTD

QA 24

Conforming to: EN 10204 3.1

SEP 17 2013

CERT. Date(日期) 2012-12-7

CERT. No(报告号) 8971

Foundry Mark(铸造厂标识)：L

Rev A4

Customer Name(客户) DRESSER Co.,LTD

Specification(标准号) ASME SA351-07/ASTM SA351-06

Material(材料) CF8M

A)Chemical Analysis(化学成分):

B)Mechanical Property(机械性能)

No. 序号	DESC.品名	Casting P/N 铸件号	Heat No. 炉号		Elements元素（%）										Yield Str. 屈服强度	Tensil Str. 抗拉强度	Elongation in 2 in. 延伸率	Reduction of Area 断面收缩率	Hardness 硬度
				Range	C	S	Mn	P	Si	Ni	Cr	Mo			MPa	MPa	%	%	HB
				Min.	0	0	0	0	0	9.0	18.0	2.0			205	485	30.0		
				Max.	0.08	0.040	1.50	0.040	1.50	12.0	21.0	3.0			∞	∞	∞		234
1	Nozzle	4829701	8971		0.049	0.006	0.90	0.029	0.70	9.24	19.00	2.15			298	559	44.0		185

C)Heat Treatment(热处理方式) :Solution（固溶处理）

One: Solution(固溶处理)

Temperature(温度) : >=1065 ℃

Holding time(保温时间) : 〉=2 H

Cooling(冷却) : Water （水冷）

Two:

Temperature(温度) :

Holding time(保温时间) :

Cooling(冷却) :

D)Dimensional Check and NDT(尺寸检验与无损检测)

Item(项目)	Criteria(标准)	Judge(判定)
Appearance&Size(外观和尺寸)	MSS-SP-55 & Drawing	OK
Nondestructive examination on part surface(表面探伤) ☐PT		
Nondestructive examinationfor internal defects of casting or weld repair(内部检查) ☐RT ☐UT		

We hereby certify that the material and heattreat described herein has been made in accordance with the above specification and All castings appearance meet the requirements called for by MSS-SP-55.

我们在此声明所有铸件材料及热处理均严格按照相关标准生产，外观符合MSS-SP-55标准的要求。

FOUNDRY INSPECTOR: 黄 燕

Process Equipment Inc. SEP 20 2013 Quality Department

QUALITY MANAGER: 贺 钰 明

Form.No:DMS/F-20Q-115

O351

GENPITFI01\300012117--DMS--11/2/2012 12:49:31 AM--N6524

CERTIFIED MATERIAL TEST REPORT
材料检测报告

WANHENG FOUNDRY CO.,LTD.

Conforming to: EN 10204 3.1

2012-10-29 GE DRESSER DMS QC 02

Add:	BINHAI.JIANGSU.CHINA	CERT. Date(日期)	2012-10-20
Tel:	86-515-84134888	Fax:	86-515-84134555
CERT. No(报告号)	B08269		
E-mail:	ark-2005@vip.163.com	Foundry Mark(铸造厂标识):	WH
Rev:	A4		
Customer Name(客户)	DRESSER Co.,LTD		
Specification(标准号)	ASME SA216-07/ASTM A216-04	Material(材料)	WCC

A)Chemical Analysis(化学成分):

B)Mechanical Property(机械性能)

No. 序号	DESC. 品名	Casting P/N铸件号	Heat No. 炉号	Elements元素（%） Remarks: 1. SUM*=Total for specified residual elements suffixed by "*"（后缀"*"的残留元素的总和） 2. CE=C+Mn/6+(Cr+Mo+V)/5+(Ni+Cu)/15													Tensil Str. 抗拉强度	Yield Str. 屈服强度	Elongation in 2 in. 延伸率	Reduction of Area 断面收缩率	Hardness 硬度
				Range	C	Mn	P	S	Si	Cu*	Ni*	Cr*	Mo*	V*	SUM*	CE	MPa	MPa	%	%	HB
				Min.	0	0	0	0	0	0	0	0	0	0	0		485	275	22	35	
				Max.	0.250	1.200	0.040	0.045	0.600	0.300	0.500	0.500	0.200	0.030	1.00		655	∞	∞	∞	234
1	BONNET	0257001	B08269		0.207	0.956	0.027	0.011	0.453	0.033	0.036	0.051	0.006	0.005	0.132		550	350	29	53	163

C)Heat Treatment(热处理方式)： Normalization(正火) +Tempering(回火)

One:			Two:		
Temperature(温度)：	890~927	℃	Temperature(温度)：	621~677	℃
Holding Time(保温时间)：	）=3	H	Holding Time(保温时间)：	>=2	H
Cooling(冷却)：	Air（空冷）		Cooling(冷却)：	Air（空冷）	

D)Dimensional Check and NDT(尺寸检验与无损检测)

Item(项目)	Criteria(标准)	Judge(判定)
Appearance&Size(外观和尺寸)	MSS-SP-55 & Draw	OK
Nondestructive examination on part surface (表面探伤) □PT □MT		
Nondestructive examination for internal defects of casting or weld repair(内部探伤) □RT □UT		

江苏万恒铸业有限公司 Jiangsu Wanheng Casting Industry Co.,Ltd 检验专用章 Test Seal

E)Statements(声明):

We hereby certify that the material and heattreat described herein have been made in accordance with the above specification and All castings appearance meet the requirements called for by MSS-SP-55.

我们在此声明所有铸件材料及热处理均严格按照相关标准生产，外观符合MSS-SP-55标准的要求。

INSPECTOR: 闫松兰

QUALITY MANAGER: 刘学

Form No.：DMS/F-20Q-101

Dresser Equipment Inc. SEP 20 2013 Quality Department

SP

Range: 0.000 TO 800.000 PSI 1108

% of Range	Applied Pressure	Requested Applied Pressure	Digital Output (PSI)	% Span Error	Pass/Fail
100.000	800.000 PSI	799.99990 PSI	800.00020	0.00004	PASS
80.000	640.000 PSI	639.99990 PSI	639.94510	-0.00685	PASS
60.000	480.000 PSI	480.00000 PSI	479.98830	-0.00146	PASS
40.000	320.000 PSI	320.00000 PSI	319.96470	-0.00441	PASS
20.000	160.000 PSI	160.00000 PSI	159.97610	-0.00299	PASS
0.000	0.000 PSI	0.00000 PSI	0.00575	0.00072	PASS

PT

Range: -200.000 TO 850.000 DEG F

% of Range	Applied Resistence	Applied Resistence	Digital Output (DEG F)	Error (DEG F)	Pass/Fail
100.000	265.680 Ohms	850.00000 DEG F	850.01730	0.01730	PASS
80.000	225.420 Ohms	640.00000 DEG F	640.01090	0.01090	PASS
60.000	183.590 Ohms	430.00000 DEG F	429.98000	-0.02000	PASS
40.000	140.190 Ohms	220.00000 DEG F	219.98300	-0.01700	PASS
20.000	95.210 Ohms	10.00000 DEG F	9.97361	-0.02639	PASS
0.000	48.470 Ohms	-200.00000 DEG F	-199.99680	0.00320	PASS

This is to certify that the listed product meets the applicable Rosemount Specifications. Measuring and test equipment used in the manufacture and inspection of the listed product are traceable to the National Institute of Standards and Technology. The calibration system was designed to meet the intent of ANSI Z540-1-1994.



Kelly Klein
Vice President of Global Quality, Approvals & EHS

EMERSON
Process Management

30 September, 2013

Emerson Process Management
Rosemount Inc.
8200 Market Blvd
Chanhassen, MN U.S. 55317-9786

1108

Certificate of Hydrostatic Testing - Consistent with ISO 10474 3.1B or EN 10204 3.1

Customer Information

Name: SPARTAN CONTROLS LTD
PO: 592995 OP

Manufacturer Information

Sales Order: 3681088
Line: 7

Device Information

Device Type: Pressure Transmitter
PDTag: 002-FIT/PI/
TI-01-1610
Serial No: 0428666
Model No: 3051SMV3M12G3R2A11A1AC12K6M5P1Q4Q8

Module Serial No: 6917705
Output: Linear
Device ID: 6002020

Test Information

Factory: CHANHASSEN, MN, USA
Operator ID: 45124
Test Date: 9/27/2013 11:08:38AM

Internal Ref # 11290492

Attached Models

0305RC52B11B4

Target Pressure		Applied Pressure		Test
PSI	BAR	PSI	BAR	Result
1200.00	82.74	1211.00	83.49	Pass

This is to certify that the listed serialized equipment was hydrostatically tested per applicable Rosemount Inc. procedures and specifications. Pressure was applied for a minimum of 10 minutes No leaks were observed.

Kelly Klein
Vice President of Global Quality, Approvals & EHS

EMERSON
Process Management

30 September, 2013

Emerson Process Management
Rosemount Inc.
8200 Market Blvd
Chanhassen, MN U.S. 55317-9786

1108

Calibration Data Sheet Consistent with ISO 10474 3.1B or EN 10204 3.1

Customer Information

Name: SPARTAN CONTROLS LTD
PO: 592995 OP

Manufacturer Information

Sales Order: 3681088
Line: 7

Device Information

Device Type: Pressure Transmitter
PDTag: 002-FIT/PI/ TI-01-1610
Serial No: 0428666
Model No: 3051SMV3M12G3R2A11A1AC12K6M5P1Q4Q8

Module Serial No: 6917705
Output: Linear
Device ID: 6002020

Calibration Information

Factory: CHANHASSEN, MN, USA
Station Name: DPFLW_CAL_02
Operator ID: 48385
Calibration Date: 9/27/2013 6:19:15PM

Internal Ref # 11290490

Attached Models

0305RC52B11B4

Equipment Used

EqNumber:	EqName:	CalDueDate:
E3-59385	Programmable Resistance Substituter	12/9/2013 12:54:00PM
E3-58604	Load Box	12/20/2013 8:49:00AM
P3-55112	Pressure Controller	1/2/2014 10:35:00AM
P3-55114	Pressure Controller	1/2/2014 2:53:00PM
E3-59313	Multimeter	3/20/2014 7:47:00AM

Calibration Data

DP

Range: 0.000 TO 250.000 InH2O@68degF

% of Range	Applied Pressure	Requested Applied Pressure	Digital Output (InH2O@68degF)	% Reading Error	Pass/Fail
99.994	9.015 PSI	249.98410 InH2O@68degF	249.97390	-0.00411	PASS
79.995	7.212 PSI	199.98730 InH2O@68degF	199.96820	-0.00957	PASS
59.996	5.409 PSI	149.99050 InH2O@68degF	149.96470	-0.01717	PASS
39.997	3.606 PSI	99.99366 InH2O@68degF	99.99487	0.00121	PASS
19.999	1.803 PSI	49.99683 InH2O@68degF	49.99300	-0.00766	PASS
0.000	0.000 PSI	0.00000 InH2O@68degF	0.00490	0.39207	PASS

EMERSON.
Process Management

26 March, 2014

Emerson Process Management
Rosemount Inc.
8200 Market Blvd
Chanhassen, MN U.S. 55317-9786

Calibration Data Sheet Consistent with ISO 10474 3.1B or EN 10204 3.1

Customer Information

Name: SPARTAN CONTROLS LTD
PO: 629474 OP
End Customer Name: 5Blue Process Equipment Inc.
End Customer PO: P9308-5B1136-82

Manufacturer Information

Sales Order: 3830240
Line: 1

Device Information

Device Type: Pressure Transmitter
Tag No: PIT-1011

Serial No: 2565501
Model No: 3051TG3A2B21AB4C6M5Q4

Module Serial No: 12769690
Output: Linear

Calibration Information

Factory: CHANHASSEN, MN, USA
Station Name: INLINE_CAL_02
Operator ID: 50405
Calibration Date: 3/25/2014 12:18:38PM

Internal Ref # 11449492

Equipment Used

EqNumber:	EqName:	CalDueDate:
E3-58605	Load Box	4/20/2014 12:52:00PM
P3-54974	Pressure Controller	6/27/2014 3:07:00PM
E3-54991	Multimeter	10/20/2014 10:54:00AM

Calibration Data

Range: 0.000 TO 800.000 PSI

% of Range	Applied Pressure	Requested Applied Pressure	Analog Output (mA)	% Span Error	Pass/Fail
100.000	800.000 PSI	800.0000 PSI	20.00052	0.00325	PASS
80.000	640.000 PSI	640.0000 PSI	16.79978	-0.00137	PASS
60.000	480.000 PSI	480.0000 PSI	13.59966	-0.00212	PASS
40.000	320.000 PSI	320.0000 PSI	10.39986	-0.00087	PASS
20.000	160.000 PSI	160.0000 PSI	7.19974	-0.00162	PASS
0.000	0.000 PSI	0.0000 PSI	4.00000	0.00000	PASS

This is to certify that the listed product meets the applicable Rosemount Specifications. Measuring and test equipment used in the manufacture and inspection of the listed product are traceable to the National Institute of Standards and Technology. The calibration system was designed to meet the intent of ANSI Z540-1-1994.

Kelly Klein
Vice President of Global Quality, Approvals & EHS

EMERSON.
Process Management

30 September, 2013

1108

Emerson Process Management
Rosemount Inc.
8200 Market Blvd
Chanhassen, MN U.S. 55317-9786

Material Certificate of Conformance - Consistent with ISO 10474 3.1B/EN 10204 3.1

Customer Information	Manufacturer Information
Name: SPARTAN CONTROLS LTD **PO:** 592995 OP	**Sales Order:** 3681088 Internal Ref # 11290491

Attached Models

0305RC52B11B4

Serial Number	Manufacturing Number	Model Number	Tag Number	Heat Number	Heat Number Description
0428666	N/A	3051SMV3M12G3R2A11A1AC12K6M5P1Q4Q8	002-FIT/PI/ TI-01-1610	ABXS	Module Housing
0428666	N/A	3051SMV3M12G3R2A11A1AC12K6M5P1Q4Q8	002-FIT/PI/ TI-01-1610	CR84	Manifold

This is to certify that materials as manufactured, assembled and shipped by Rosemount for this order are in accordance with the material section as specified on the applicable Rosemount drawings.Test reports from Rosemount suppliers are attached.The listed complete model numbers, as manufactured, assembled and shipped by Rosemount for this order are in compliance with ISO 10474 3.1B or EN 10204 3.1

Kelly Klein
Vice President of Global Quality, Approvals & EHS

CERTIFICATION

SIGNICAST
INVESTMENT CASTINGS

1800 Innovation Way, Module 4, Hartford, WI 53027 Phone: (262) 673-2700

TO: ROSEMONT INC.
CERT MAIL BOX
8200 MARKET BLVD.
CHANHASSEN, MN 55317-

FAX NO:

INVOICE NUMBER	PURCHASE ORDER	YOUR PART NO	BP NO	REV NO
0647342	010510	03095-0003-0011	03095-0003-0011	AE

ALLOY GRADE	PIECES SHIPPED	SHIPPED ON	REQUIREMENT NO	OUR PART NO
CF-3M	500	10/22/12	678519	02141

PART NAME: MODULE HOUSING

CHEMICAL CERTIFICATION

HEAT	C	MN	SI	CR	NI	MO	P	S	FE
SPEC MAX	.030	1.500	1.500	21.000	13.000	3.000	.040	.025	BAL
SPEC MIN				17.000	9.000	2.000		.015	BAL
ABXN	.023	1.165	1.305	18.090	9.505	2.122	.033	.024	BAL
ABXP	.019	.994	.844	17.400	12.453	2.144	.031	.015	BAL
ABXR	.022	1.154	1.250	18.050	9.515	2.036	.032	.020	BAL
ABXS	.019	1.207	1.316	18.020	9.475	2.092	.029	.020	BAL
ABXT	.022	1.179	1.309	17.940	9.498	2.078	.024	.015	BAL
ABXV	.023	1.051	1.215	18.040	9.760	2.159	.028	.023	BAL

MECHANICAL PROPERTY CERTIFICATION

HEAT TREATED TO: SIGNICAST SPEC NO: 3350 - SOLUTION ANNEAL

TEST BAR RESULTS

HEAT	UTS (KSI)	YS (KSI)	%E
SPEC MIN	70	30	30
ABXN	83.2	40.3	39
ABXP	74.9	35.2	44
ABXR	85.8	44.4	40
ABXS	87.6	45	38
ABXT	86.3	42.4	42
ABXV	86.1	41.7	45

HEAT TREAT CERTIFICATION

HEAT TREATED TO: SIGNICAST SPEC NO: 3350 - SOLUTION ANNEAL

SPECIFICATION	MICROSTRUCTURE: Annealed microstructure revealing ferrite. HARDNESS: HRb 85 Max

HARDNESS TEST RESULTS

LOT	TEST LOCATION	MIN VALUE	MAX VALUE	AVG RESULTS
0634	ANY SUITABLE FLAT SURFACE	68.2	79.3	73.9
0635	ANY SUITABLE FLAT SURFACE	80.2	83.6	81.3
0636	ANY SUITABLE FLAT SURFACE	78.7	84.5	82.1

CERTIFICATION

SIGNICAST
INVESTMENT CASTINGS

1800 Innovation Way, Module 4, Hartford, WI 53027 Phone: (262) 673-2700

Alloy grade per ASTM A743 (316L), ISSUED 2006, with Sulfur content .020 +/-.005 . This certificate meets the requirements of an Inspection Certificate Type 3.1 of EN 10204:2005. The material manufacturer, Signicast Corporation, complies with PED 97/23/EC-Annex I, 4.3, with Certificate Number 01 202 USA/Q 06 2856 on file.

Electronically Signed and Certified by: ***RACHEL CLARK*** ***"SHIPPING TECHNICIAN"***

at: 10/22/2012 9:00:57 PM

Customer: EMERSON PROCESS MANA PO#: 25547334 PGI P/N: C30513-1124-0000 Rev#: 002 Qty: 1

Cust P/N: 0305RC52B11 PO#: 25547334 Auth Sign: SO#: S2435 Line: 1

JIANGYINSHI STAINLESS STEEL MATERIAL FACTORY
QUALITY INSPECTION CERTIFICATE
江阴市不锈钢材料厂质量证明书

Heat Code: CR84

Address: Lukou Bridge, Taocheng Village, zhouzhuangTown, jiangyin City, Jiangsu
Post code: 214423
Tel: 0510-86236681
Fax:0510-86905200

Customer 客户名称: PGI China Contract No. 合同号: 7578#

Customer item No/ 客户物料号 : 1.26FW316-5.63 Rev版本 : 001 Certificate No 质量证明书编号:20_ Date日期: 2013-6-18

Commodity 产品名称	Stainless Steel Bar 不锈钢型材	Product Specification 产品标准	ASTM A479	Supply Condition 供货条件	Bright
Heat No. 炉号	Steel Grade钢种	Steel making process 热处理号	Size尺寸(mm)	Piece(s) 支数	Weight 重量(kg)
12A1120-2485	316/316L	130114	32.13*63.5*145.16	300块	

Chemical Composition (%) 化学成分BS EN10272-2007

	C	Si	Mn	P	S	Cr	Mo	Ni	N	Nb		Cu
Spec.规范要求	≤0.030	≤1.00	≤2.00	≤0.045	≤0.030	16.0-18.0	2.0-3.0	10.0-14.0				
Product analysis	0.026	0.38	1.74	0.042	0.019	16.66	2.03	10.09				

Tensile Test at RT (Longitudinal)室温拉伸试验（纵向）
Round sample 圆形试样
Size试样尺寸: d=10mm L0=50mm Lc=55mm

Tensile strength 抗拉强度（KSI）	Yield strength(Rp0.2) 屈服强度（KSI） 0.2%	Elongation 延伸率%	reduction or Area (%) 断后收缩率
87.52	66.02	54	79

Charpy V-notch Impact Test (Longitudinal) (J) 夏比V型缺口冲击试验（纵向）
Size试样尺寸: 10*10*55 mm
Less to 2 mm external surface距离外表面:<2 mm

At RT		AT-196℃	
Individual 单个功	Average 平均功	Individual 单个功	Average 平均功
-		- -	-

Visual, Shape and Dimension 外观/尺寸检查	Hardness硬度(HBW) 检测值 Detection value	平均值 mean	Intergranular Corrosion Test 晶间腐蚀	UT 超声波检测	晶粒度 (Grain size) ASTM E112-2012
Satisfactory(合格)	197/189/197	194.3	Satisfactory(合格)	Satisfactory(合格)	平均晶粒度为6级 The average grain size for level 5
Smelting method (冶炼方式)	ARC + AOD		Electric arc furnace model电弧炉型号:	AOD (精炼炉) 型号: 3230型	

Heat treatment热处理方式:	1050℃ Annealing/1hr	Batch (箱式炉—批处理)	Quench Method (淬火介质): Water (水)
	Quench Start and finish (淬火的起始温度): 1050℃-35℃		Monitoring Method (监控方法): cintact thermocouple (接触热电偶) Temperature controller (温控仪表)

We hereby certify that the materials described herein have been manufactured, inspected and tested in accordance with the customer's specification(s), and that they satisfy the requirements. We hereby certify that the above material test report is in accordance with inspection certificate EN 10204 3.1 (3.1.B) Our Company Has Passed ISO9001 Certification

Issued by:制表人: 闵英红

Department of Quality Inspection (Stamp) 质保部盖章

Inspection Representative 检验代表签字:

B55 Non-Conformance Reports (NCR)

2303-8th Street, Nisku Alberta, T9E-7Z3 CANADA

This section does not apply

C. CALCULATIONS



C1 Vessel Mechanical Design (Including Nozzle Repad, Vessel Support, and Local Stress Calculations)

2303-8th Street, Nisku Alberta, T9E-7Z3 CANADA

5BLUE PROCESS EQUIPMENT

2303-8TH STREET

NISKU, ALBERTA

T9E-7Z3

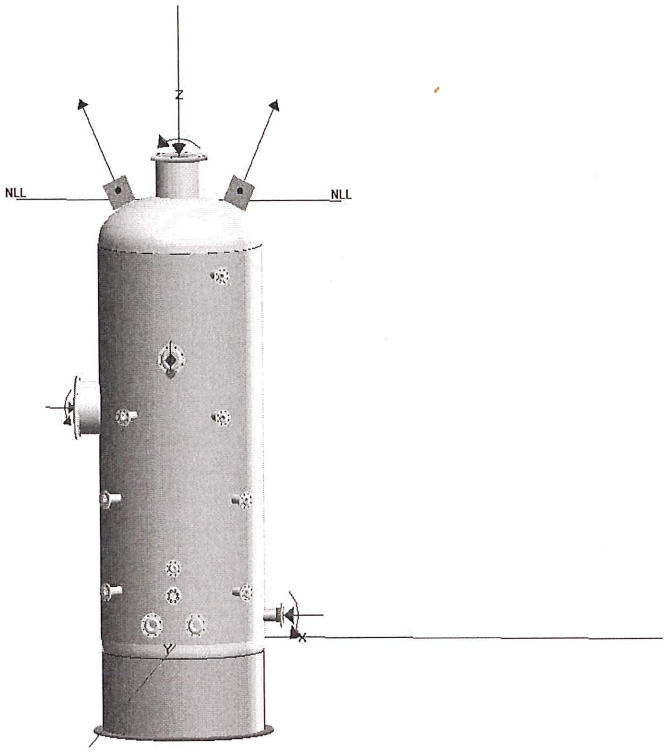

COMPRESS PRESSURE VESSEL DESIGN CALCULATIONS

Item: CARDIUM GAS SEPARATOR (5B1108)
Vessel No: V-1610
Customer: DEVON C/O WORLEY PARSONS
Contract: 407014-00120
Designer: RC
Date: AUGUST 19, 2013

IFC DESIGN CALCULATIONS



19/08/2013
Rick Crook

Thickness Summary

Component Identifier	Material	Diameter (in)	Length (in)	Nominal t (in)	Design t (in)	Total Corrosion (in)	Joint E	Load
HEAD # 1	SA-516 70	66 ID	17.0313	0.5313*	0.4575	0.125	1.00	Internal
Straight Flange on HEAD # 1	SA-516 70	66 ID	2	0.625	0.4593	0.125	1.00	Internal
SHELL	SA-516 70	66 ID	144	0.625	0.468	0.125	1.00	Internal
Straight Flange on HEAD # 2	SA-516 70	66 ID	2	0.625	0.4681	0.125	1.00	Internal
HEAD # 2	SA-516 70	66 ID	17.0313	0.5313*	0.4674	0.125	1.00	Internal
SKIRT	SA-516 70	66 ID	30	0.375	0.0217	0	0.55	Seismic

Nominal t: Vessel wall nominal thickness

Design t: Required vessel thickness due to governing loading + corrosion

Joint E: Longitudinal seam joint efficiency

* Head minimum thickness after forming

Load

internal: Circumferential stress due to internal pressure governs

external: External pressure governs

Wind: Combined longitudinal stress of pressure + weight + wind governs

Seismic: Combined longitudinal stress of pressure + weight + seismic governs

Pressure Summary

Pressure Summary for Chamber bounded by HEAD # 2 and HEAD # 1

Identifier	P Design (psi)	T Design (°F)	MAWP (psi)	MAP (psi)	MAEP (psi)	T_e external (°F)	MDMT (°F)	MDMT Exemption	Impact Tested
HEAD # 1	200	302	244.49	321.48	79.33	302	-55	Note 1	No
Straight Flange on HEAD # 1	200	302	298.58	374.53	49.76	302	-55	Note 2	No
SHELL	200	302	293.38	374.53	49.76	302	-55	Note 3	No
Straight Flange on HEAD # 2	200	302	293.31	374.53	49.76	302	-55	Note 5	No
HEAD # 2	200	302	238.55	321.48	79.33	302	-55	Note 4	No
M1 (M1)	200	302	200	200	15	302	-55	Note 6	Yes
N1 (N1)	200	302	200	200	15	302	-55	Note 6	Yes
N10 (N10)	200	302	200	200	15	302	-55	Note 6	Yes
N11 (N11)	200	302	200	200	15	302	-55	Note 6	Yes
N12A (N12A)	200	302	200	200	15	302	-55	Note 6	Yes
N12B (N12B)	200	302	200	200	15	302	-55	Note 6	Yes
N13 (N13)	200	302	200	200	15	302	-55	Note 6	Yes
N2 (N2)	200	302	200	200	15	302	-55	Note 6	Yes
N3 (N3)	200	302	200	200	15	302	-55	Note 7	No
N5 (N5)	200	302	200	200	15	302	-55	Note 6	Yes
N6A (N6A)	200	302	200	200	15	302	-55	Note 6	Yes
N6B (N6B)	200	302	200	200	15	302	-55	Note 6	Yes
N7A (N7A)	200	302	200	200	15	302	-55	Note 6	Yes
N7B (N7B)	200	302	200	200	15	302	-55	Note 6	Yes
N8 (N8)	200	302	200	200	15	302	-55	Note 6	Yes
N9 (N9)	200	302	200	200	15	302	-55	Note 6	Yes

Chamber design MDMT is -50 °F
Chamber rated MDMT is -55 °F @ 200 psi

Chamber MAWP hot & corroded is 200 psi @ 302 °F

Chamber MAP cold & new is 200 psi @ 60 °F

Chamber MAEP is 15 psi @ 302 °F
Vacuum rings did not govern the external pressure rating.

Notes for MDMT Rating:

Note #	Exemption	Details
1.	Straight Flange governs MDMT	
2.	Material impact test exemption temperature from Fig UCS-66 Curve D = -48 °F Fig UCS-66.1 MDMT reduction = 33.2 °F, (coincident ratio = 0.6685) Rated MDMT of -81.2°F is limited to -55°F by UCS-66(b)(2)	UCS-66 governing thickness = 0.625 in

3.	Material impact test exemption temperature from Fig UCS-66 Curve D = -48 °F Fig UCS-66.1 MDMT reduction – 31.4 °F, (coincident ratio = 0.6859) Rated MDMT of -79.4°F is limited to -55°F by UCS-66(b)(2)	UCS-66 governing thickness = 0.625 in
4.	Straight Flange governs MDMT	
5.	Material impact test exemption temperature from Fig UCS-66 Curve D = -48 °F Fig UCS-66.1 MDMT reduction = 31.4 °F, (coincident ratio = 0.6862) Rated MDMT of -79.4°F is limited to -55°F by UCS-66(b)(2)	UCS-66 governing thickness = 0.625 in
6.	Nozzle is impact tested to -50 °F with an additional 5 °F reduction per UCS-66(g).	
7.	Flange rating governs: Flange impact tested to -55°F (UCS-66(g))	UG-84 provisions apply

Design notes are available on the Settings Summary page.

Weight Summary

Component	Weight (lb) Contributed by Vessel Elements										Surface Area ft²
	Metal New*	Metal Corroded*	Insulation	Insulation Supports	Lining	Piping + Liquid	Operating Liquid		Test Liquid		
							New	Corroded	New	Corroded	
HEAD # 1	798.3	616	0	0	0	0	1,576.7	1,595.6	1,692.7	1,718	39
SHELL	5,169.6	4,143.7	0	0	0	0	18,089.1	18,235.3	18,089.1	18,235.3	205
HEAD # 2	843.8	650.7	0	0	0	0	1,605.4	1,628	1,605.4	1,628	41
SKIRT	641.8	641.8	0	0	0	0	0	0	0	0	87
BASE PLATE	360	360	0	0	0	0	0	0	0	0	19
TOTAL:	**7,813.5**	**6,412.2**	**0**	**0**	**0**	**0**	**21,271.3**	**21,458.9**	**21,387.3**	**21,581.3**	**391**

* Shells with attached nozzles have weight reduced by material cut out for opening.

Component	Weight (lb) Contributed by Attachments										Surface Area ft²
	Body Flanges		Nozzles & Flanges		Packed Beds	Ladders & Platforms	Trays	Tray Supports	Rings & Clips	Vertical Loads	
	New	Corroded	New	Corroded							
HEAD # 1	0	0	529.7	499	0	0	0	0	54.7	0	10
SHELL	0	0	1,938.4	1,824.4	0	0	0	0	0	1,253	35
HEAD # 2	0	0	0	0	0	0	0	0	0	0	0
SKIRT	0	0	0	0	0	0	0	0	0	0	0
TOTAL:	**0**	**0**	**2,468.1**	**2,323.4**	**0**	**0**	**0**	**0**	**54.7**	**1,253**	**45**

Vessel operating weight, Corroded: 31,502 lb
Vessel operating weight, New: 32,861 lb
Vessel empty weight, Corroded: 10,043 lb
Vessel empty weight, New: 11,589 lb
Vessel test weight, New: 32,977 lb
Vessel test weight, Corroded: 31,625 lb
Vessel surface area: 436 ft²

Vessel center of gravity location - from datum - lift condition

Vessel Lift Weight, New: 11,589 lb
Center of Gravity: 63.1922"

Vessel Capacity

Vessel Capacity** (New): 2,518 US gal
Vessel Capacity** (Corroded): 2,539 US gal
**The vessel capacity does not include volume of nozzle, piping or other attachments.

Nozzle Summary

Nozzle mark	OD (in)	t_n (in)	Req t_n (in)	A_1?	A_2?	Shell			Reinforcement Pad		Corr (in)	A_a/A_r (%)
						Nom t (in)	Design t (in)	User t (in)	Width (in)	t_{pad} (in)		
M1	23.19	1.595	0.4531	Yes	Yes	0.625	0.4671		N/A	N/A	0.125	103.5
N1	19.62	1.81	0.4531	Yes	Yes	0.625	0.4634		N/A	N/A	0.125	123.2
N10	3.31	0.655	0.314	Yes	Yes	0.625	0.4663		N/A	N/A	0.125	233.6
N11	3.31	0.655	0.314	Yes	Yes	0.625	0.4669		N/A	N/A	0.125	233.0
N12A	5.5	0.75	0.3508	Yes	Yes	0.625	0.4676		N/A	N/A	0.125	159.1
N12B	5.5	0.75	0.3508	Yes	Yes	0.625	0.4676		N/A	N/A	0.125	159.1
N13	3.31	0.655	0.314	Yes	Yes	0.625	0.4598		N/A	N/A	0.125	240.1
N2	19.62	1.81	0.4531	Yes	Yes	0.5313*	0.4223		N/A	N/A	0.125	107.0
N3	4.5	0.531	0.3799	Yes	Yes	0.625	0.4676		N/A	N/A	0.125	129.0
N5	7.75	0.875	0.4068	Yes	Yes	0.625	0.4617		N/A	N/A	0.125	140.5
N6A	3.31	0.655	0.314	Yes	Yes	0.625	0.4648		N/A	N/A	0.125	235.1
N6B	3.31	0.655	0.314	Yes	Yes	0.625	0.4669		N/A	N/A	0.125	233.0
N7A	3.31	0.655	0.314	Yes	Yes	0.625	0.4648		N/A	N/A	0.125	235.1
N7B	3.31	0.655	0.314	Yes	Yes	0.625	0.4669		N/A	N/A	0.125	233.0
N8	3.31	0.655	0.314	Yes	Yes	0.625	0.4629		N/A	N/A	0.125	236.9
N9	3.31	0.655	0.314	Yes	Yes	0.625	0.4629		N/A	N/A	0.125	236.9

t_n: Nozzle thickness

Req t_n: Nozzle thickness required per UG-45/UG-16

Nom t: Vessel wall thickness

Design t: Required vessel wall thickness due to pressure + corrosion allowance per UG-37

User t: Local vessel wall thickness (near opening)

A_a: Area available per UG-37, governing condition

A_r: Area required per UG-37, governing condition

Corr: Corrosion allowance on nozzle wall

* Head minimum thickness after forming

Hydrostatic Test

Shop test pressure determination for Chamber bounded by HEAD # 2 and HEAD # 1 based on MAWP per UG-99(b)

Shop hydrostatic test gauge pressure is 260 psi at 60 °F (the chamber MAWP = 200 psi)

The shop test is performed with the vessel in the horizontal position.

Identifier	Local test pressure psi	Test liquid static head psi	UG-99(b) stress ratio	UG-99(b) pressure factor	Stress during test psi	Allowable test stress psi	Stress excessive?
HEAD # 1 (1)	262.694	2.694	1	1.30	14,685	34,200	No
Straight Flange on HEAD # 1	262.694	2.694	1	1.30	14,001	34,200	No
SHELL	262.694	2.694	1	1.30	14,001	34,200	No
Straight Flange on HEAD # 2	262.694	2.694	1	1.30	14,001	34,200	No
HEAD # 2	262.694	2.694	1	1.30	14,685	34,200	No
M1 (M1)	261.864	1.864	1	1.30	16,992	51,300	No
N1 (N1)	263.068	3.068	1	1.30	13,890	51,300	No
N10 (N10)	261.539	1.539	1	1.30	14,556	51,300	No
N11 (N11)	261.539	1.539	1	1.30	14,556	51,300	No
N12A (N12A)	261.9	1.9	1	1.30	16,066	51,300	No
N12B (N12B)	261.25	1.25	1	1.30	16,027	51,300	No
N13 (N13)	260.927	0.927	1	1.30	14,522	51,300	No
N2 (N2)	261.791	1.791	1	1.30	18,982	51,300	No
N3 (N3)	260.289	0.289	1	1.30	14,653	51,300	No
N5 (N5)	261.611	1.611	1	1.30	17,646	51,300	No
N6A (N6A)	260.67	0.67	1	1.30	14,508	51,300	No
N6B (N6B)	260.67	0.67	1	1.30	14,508	51,300	No
N7A (N7A)	262.591	2.591	1	1.30	14,615	51,300	No
N7B (N7B)	262.591	2.591	1	1.30	14,615	51,300	No
N8 (N8)	260.927	0.927	1	1.30	14,522	51,300	No
N9 (N9)	262.285	2.285	1	1.30	14,598	51,300	No

Notes:
(1) HEAD # 1 limits the UG-99(b) stress ratio.
(2) P_L stresses at nozzle openings have been estimated using the method described in PVP-Vol. 399, pages 77-82.
(3) $1.5*0.9*S_y$ used as the basis for the maximum local primary membrane stress at the nozzle intersection P_L.
(4) The zero degree angular position is assumed to be up, and the test liquid height is assumed to the top-most flange.

The field test condition has not been investigated for the Chamber bounded by HEAD # 2 and HEAD # 1.

The test temperature of 60 °F is warmer than the minimum recommended temperature of -25 °F so the brittle fracture provision of UG-99(h) has been met.

HEAD # 1

ASME Section VIII, Division 1, 2010 Edition, A11 Addenda

Component:	Ellipsoidal Head
Material Specification:	SA-516 70 (II-D p.18, ln. 19)

Straight Flange governs MDMT

Internal design pressure: P = 200 psi @ 302 °F
External design pressure: P_e = 15 psi @ 302 °F

Static liquid head:

P_s= 0.52 psi (SG=1, H_s=14.5" Operating head)
P_{th}= 2.69 psi (SG=1, H_s=74.625" Horizontal test head)

Corrosion allowance:	Inner C = 0.125"	Outer C = 0"

Design MDMT = -50°F
Rated MDMT = -55°F

No impact test performed
Material is normalized
Material is not produced to fine grain practice
PWHT is not performed
Do not Optimize MDMT / Find MAWP

Radiography:	Category A joints -	Seamless No RT
	Head to shell seam -	Full UW-11(a) Type 1
Estimated weight*:	new = 798.3 lb	corr = 616 lb
Capacity*:	new = 192.5 US gal	corr = 195.2 US gal

* includes straight flange

Inner diameter	=	66"
Minimum head thickness	=	0.5313"
Head ratio D/2h	=	2 (new)
Head ratio D/2h	=	1.9925 (corroded)
Straight flange length L_{sf}	=	2"
Nominal straight flange thickness t_{sf}	=	0.625"

Results Summary

The governing condition is internal pressure.

Minimum thickness per UG-16	=	0.0625" + 0.125" = 0.1875"
Design thickness due to internal pressure (t)	=	0.4575"
Design thickness due to external pressure (t_e)	=	0.2967"
Maximum allowable working pressure (MAWP)	=	244.49 psi
Maximum allowable pressure (MAP)	=	321.48 psi
Maximum allowable external pressure (MAEP)	=	79.33 psi

Design thickness for internal pressure, (Corroded at 302 °F) UG-32(d)(1)

t = P*D / (2*S*E - 0.2*P) + Corrosion
= 200.52*66.25 / (2*20,000*1 - 0.2*200.52) + 0.125
= 0.4575"

The head internal pressure design thickness is 0.4575".

Maximum allowable working pressure, (Corroded at 302 °F) UG-32(d)(1)

P = 2*S*E*t / (D + 0.2*t) - P_s
= 2*20,000*1*0.4063 / (66.25 +0.2*0.4063) - 0.52
= 244.49 psi

The maximum allowable working pressure (MAWP) is 244.49 psi.

Maximum allowable pressure, (New at 70 °F) UG-32(d)(1)

P = 2*S*E*t / (D + 0.2*t) - P_s
= 2*20,000*1*0.5313 / (66 +0.2*0.5313) - 0
= 321.48 psi

The maximum allowable pressure (MAP) is 321.48 psi.

Design thickness for external pressure, (Corroded at 302 °F) UG-33(d)

Equivalent outside spherical radius (R_o)
R_o = K_o*D_o
= 0.886*67.0626
= 59.4149 in

A = 0.125 / (R_o / t)
= 0.125 / (59.4149 / 0.171675)
= 0.000361

From Table CS-2:B = 5,191.3303 psi

P_a = B / (R_o / t)
= 5,191.3303 / (59.4149 / 0.1717)
= 15 psi

t = 0.1717" + Corrosion = 0.1717" + 0.125" = 0.2967"

Check the external pressure per UG-33(a)(1) UG-32(d)(1)

t = 1.67*P_e*D / (2*S*E - 0.2*1.67*P_e) + Corrosion
= 1.67*15*66.25 / (2*20,000*1 - 0.2*1.67*15) + 0.125

= 0.1665"

The head external pressure design thickness (t_e) is 0.2967".

Maximum Allowable External Pressure, (Corroded at 302 °F) UG-33(d)

Equivalent outside spherical radius (R_o)

R_o = $K_o * D_o$
= 0.886*67.0626
= 59.4149 in

A = $0.125 / (R_o / t)$
= 0.125 / (59.4149 / 0.4063)
= 0.000855

From Table CS-2:B = 11,600.23 psi

P_a = $B / (R_o / t)$
= 11,600.23 / (59.4149 / 0.4063)
= 79.3264 psi

Check the Maximum External Pressure, UG-33(a)(1) UG-32(d)(1)

P = $2*S*E*t / ((D + 0.2*t)*1.67) - P_{s2}$
= 2*20,000*1*0.4063 / ((66.25 +0.2*0.4063)*1.67) - 0
= 146.71 psi

The maximum allowable external pressure (MAEP) is 79.33 psi.

% Extreme fiber elongation - UCS-79(d)

EFE = $(75*t / R_f)*(1 - R_f / R_o)$
= $(75*0.625 / 11.5325)*(1 - 11.5325 / \infty)$
= 4.0646%

The extreme fiber elongation does not exceed 5%.

HEAD # 2

ASME Section VIII, Division 1, 2010 Edition, A11 Addenda

Component:	Ellipsoidal Head
Material Specification:	SA-516 70 (II-D p.18, ln. 19)
Straight Flange governs MDMT	

Internal design pressure: P = 200 psi @ 302 °F
External design pressure: P_e = 15 psi @ 302 °F

Static liquid head:

P_s= 6.47 psi (SG=1, H_s=179.125" Operating head)
P_{th}= 2.69 psi (SG=1, H_s=74.625" Horizontal test head)

Corrosion allowance:	Inner C = 0.125"	Outer C = 0"

Design MDMT = -50°F	No impact test performed
Rated MDMT = -55°F	Material is normalized
	Material is not produced to fine grain practice
	PWHT is not performed
	Do not Optimize MDMT / Find MAWP

Radiography:	Category A joints -	Seamless No RT
	Head to shell seam -	Full UW-11(a) Type 1
Estimated weight*:	new = 843.8 lb	corr = 650.7 lb
Capacity*:	new = 192.5 US gal	corr = 195.2 US gal

* includes straight flange

Inner diameter	=	66"
Minimum head thickness	=	0.5313"
Head ratio D/2h	=	2 (new)
Head ratio D/2h	=	1.9925 (corroded)
Straight flange length L_{sf}	=	2"
Nominal straight flange thickness t_{sf}	=	0.625"

Results Summary

The governing condition is internal pressure.

Minimum thickness per UG-16	=	0.0625" + 0.125" = 0.1875"
Design thickness due to internal pressure (t)	=	0.4674"
Design thickness due to external pressure (t_e)	=	0.2967"
Maximum allowable working pressure (MAWP)	=	238.55 psi
Maximum allowable pressure (MAP)	=	321.48 psi
Maximum allowable external pressure (MAEP)	=	79.33 psi

Design thickness for internal pressure, (Corroded at 302 °F) UG-32(d)(1)

t = P*D / (2*S*E - 0.2*P) + Corrosion
= 206.47*66.25 / (2*20,000*1 - 0.2*206.47) + 0.125
= 0.4673"

The head internal pressure design thickness is 0.4674".

Maximum allowable working pressure, (Corroded at 302 °F) UG-32(d)(1)

P = 2*S*E*t / (D + 0.2*t) - P_s
= 2*20,000*1*0.4063 / (66.25 +0.2*0.4063) - 6.47
= 238.55 psi

The maximum allowable working pressure (MAWP) is 238.55 psi.

Maximum allowable pressure, (New at 70 °F) UG-32(d)(1)

P = 2*S*E*t / (D + 0.2*t) - P_s
= 2*20,000*1*0.5313 / (66 +0.2*0.5313) - 0
= 321.48 psi

The maximum allowable pressure (MAP) is 321.48 psi.

Design thickness for external pressure, (Corroded at 302 °F) UG-33(d)

Equivalent outside spherical radius (R_o)
R_o = K_o*D_o
= 0.886*67.0626
= 59.4149 in

A = 0.125 / (R_o / t)
= 0.125 / (59.4149 / 0.171675)
= 0.000361

From Table CS-2:B = 5,191.3303 psi

P_a = B / (R_o / t)
= 5,191.3303 / (59.4149 / 0.1717)
= 15 psi

t = 0.1717" + Corrosion = 0.1717" + 0.125" = 0.2967"

Check the external pressure per UG-33(a)(1) UG-32(d)(1)

t = 1.67*P_e*D / (2*S*E - 0.2*1.67*P_e) + Corrosion
= 1.67*15*66.25 / (2*20,000*1 - 0.2*1.67*15) + 0.125

= 0.1665"

The head external pressure design thickness (t_e) is 0.2967".

Maximum Allowable External Pressure, (Corroded at 302 °F) UG-33(d)

Equivalent outside spherical radius (R_o)

$R_o = K_o * D_o$
$= 0.886 * 67.0626$
$= 59.4149$ in

$A = 0.125 / (R_o / t)$
$= 0.125 / (59.4149 / 0.4063)$
$= 0.000855$

From Table CS-2:B = 11,600.23 psi

$P_a = B / (R_o / t)$
$= 11,600.23 / (59.4149 / 0.4063)$
$= 79.3264$ psi

Check the Maximum External Pressure, UG-33(a)(1) UG-32(d)(1)

$P = 2*S*E*t / ((D + 0.2*t)*1.67) - P_{s2}$
$= 2*20,000*1*0.4063 / ((66.25 + 0.2*0.4063)*1.67) - 0$
$= 146.71$ psi

The maximum allowable external pressure (MAEP) is 79.33 psi.

% Extreme fiber elongation - UCS-79(d)

$EFE = (75*t / R_f)*(1 - R_f / R_o)$
$= (75*0.625 / 11.5325)*(1 - 11.5325 / \infty)$
$= 4.0646\%$

The extreme fiber elongation does not exceed 5%.

SHELL

ASME Section VIII Division 1, 2010 Edition, A11 Addenda

Component: Cylinder
Material specification: SA-516 70 (II-D p. 18, ln. 19)
Material impact test exemption temperature from Fig UCS-66 Curve D = -48 °F
Fig UCS-66.1 MDMT reduction = 31.4 °F, (coincident ratio = 0.6859)
Rated MDMT of -79.4°F is limited to -55°F by UCS-66(b)(2)
UCS-66 governing thickness = 0.625 in

Internal design pressure: P = 200 psi @ 302 °F
External design pressure: P_e = 15 psi @ 302 °F

Static liquid head:

P_s = 5.79 psi (SG = 1, H_s = 160.5",Operating head)
P_{th} = 2.69 psi (SG = 1, H_s = 74.625", Horizontal test head)

Corrosion allowance Inner C = 0.125" Outer C = 0"

Design MDMT = -50 °F
Rated MDMT = -55 °F

No impact test performed
Material is normalized
Material is not produced to Fine Grain Practice
PWHT is not performed

Radiography: Longitudinal joint - Full UW-11(a) Type 1
Top circumferential joint - Full UW-11(a) Type 1
Bottom circumferential joint - Full UW-11(a) Type 1

Estimated weight New = 5,169.6 lb corr = 4,143.7 lb
Capacity New = 2,132.69 US gal corr = 2,148.88 US gal

ID = 66"
Length L_c = 144"
t = 0.625"

Design thickness, (at 302 °F) UG-27(c)(1)

t = P*R / (S*E - 0.60*P) + Corrosion
= 205.79*33.125 / (20,000*1.00 - 0.60*205.79) + 0.125
= 0.468"

Maximum allowable working pressure, (at 302 °F) UG-27(c)(1)

P = S*E*t / (R + 0.60*t) - P_s
= 20,000*1.00*0.5 / (33.125 + 0.60*0.5) - 5.79
= 293.38 psi

Maximum allowable pressure, (at 70 °F) UG-27(c)(1)

P = S*E*t / (R + 0.60*t)
= 20,000*1.00*0.625 / (33 + 0.60*0.625)
= 374.53 psi

External Pressure, (Corroded & at 302 °F) UG-28(c)

L / D_o = 159.0833 / 67.25 = 2.3656
D_o / t = 67.25 / 0.3085 = 217.9765
From table G: A = 0.000171
From table CS-2: B = 2,452.2353 psi

P_a = 4*B / (3*(D_o / t))
= 4*2,452.24 / (3*(67.25 / 0.3085))
= 15 psi

Design thickness for external pressure P_a = 15 psi

t_a = t + Corrosion = 0.3085 + 0.125 = 0.4335"

Maximum Allowable External Pressure, (Corroded & at 302 °F) UG-28(c)

L / D_o = 159.0833 / 67.25 = 2.3656
D_o / t = 67.25 / 0.5 = 134.5000
From table G: A = 0.000349
From table CS-2: B = 5,019.1988 psi

P_a = 4*B / (3*(D_o / t))
= 4*5,019.2 / (3*(67.25 / 0.5))
= 49.76 psi

% Extreme fiber elongation - UCS-79(d)

EFE = (50*t / R_f)*(1 - R_f / R_o)
= (50*0.625 / 33.3125)*(1 - 33.3125 / ∞)
= 0.9381%

The extreme fiber elongation does not exceed 5%.

External Pressure + Weight + Wind Loading Check (Bergman, ASME paper 54-A-104)

=

P_v $W / (2*\pi*R_m) + M / (\pi*R_m^2)$
$= 8,390.8 / (2*\pi*33.375) + 99,185 / (\pi*33.375^2)$
$= 68.3566$ lb/in
$\alpha = P_v / (P_e*D_o)$
$= 68.3566 / (15*67.25)$
$= 0.0678$
$n = 3$
$m = 1.23 / (L / D_o)^2$
$= 1.23 / (159.0833 / 67.25)^2$
$= 0.2198$
Ratio $P_e = (n^2 - 1 + m + m*\alpha) / (n^2 - 1 + m)$
$= (3^2 - 1 + 0.2198 + 0.2198*0.0678) / (3^2 - 1 + 0.2198)$
$= 1.0018$
Ratio $P_e * P_e \leq$ MAEP design cylinder thickness is satisfactory.

External Pressure + Weight + Seismic Loading Check (Bergman, ASME paper 54-A-104)

$P_v = W / (2*\pi*R_m) + M / (\pi*R_m^2)$
$= 8,390.8 / (2*\pi*33.375) + 347,980 / (\pi*33.375^2)$
$= 139.4532$ lb/in
$\alpha = P_v / (P_e*D_o)$
$= 139.4532 / (15*67.25)$
$= 0.1382$
$n = 3$
$m = 1.23 / (L / D_o)^2$
$= 1.23 / (159.0833 / 67.25)^2$
$= 0.2198$
Ratio $P_e = (n^2 - 1 + m + m*\alpha) / (n^2 - 1 + m)$
$= (3^2 - 1 + 0.2198 + 0.2198*0.1382) / (3^2 - 1 + 0.2198)$
$= 1.0037$
Ratio $P_e * P_e \leq$ MAEP design cylinder thickness is satisfactory.

Design thickness = 0.468"

The governing condition is due to internal pressure.

The cylinder thickness of 0.625" is adequate.

Thickness Required Due to Pressure + External Loads

Condition	Pressure P (psi)	Allowable Stress Before UG-23 Stress Increase (psi)		Temperature (°F)	Corrosion C (in)	Load	Req'd Thk Due to Tension (in)	Req'd Thk Due to Compression (in)
		S_t	S_c					
Operating, Hot & Corroded	200	20,000	14,650	302	0.125	Wind	0.1373	0.1349
						Seismic	0.1403	0.132
Operating, Hot & New	200	20,000	15,392	302	0	Wind	0.1365	0.1341
						Seismic	0.1397	0.131
Hot Shut Down, Corroded	0	20,000	14,650	302	0.125	Wind	0.0007	0.0039
						Seismic	0.0025	0.0079
Hot Shut Down, New	0	20,000	15,392	302	0	Wind	0.0009	0.0041
						Seismic	0.0024	0.0082
Empty, Corroded	0	20,000	14,689	70	0.125	Wind	0.0007	0.0039
						Seismic	0.0001	0.0047
Empty, New	0	20,000	15,433	70	0	Wind	0.0009	0.0041
						Seismic	0	0.0051
Vacuum	-15	20,000	14,650	302	0.125	Wind	0.0148	0.018
						Seismic	0.0107	0.0221
Hot Shut Down, Corroded, Weight & Eccentric Moments Only	0	20,000	14,650	302	0.125	Weight	0.0017	0.0038

SKIRT

Material:	SA-516 70 (II-D p. 18, ln. 19)
Design temperature, operating:	302 °F
Design temperature, vacuum:	302 °F
Inner diameter at top, new:	66 in
Inner diameter at bottom, new:	66 in
Overall length (includes base ring thickness):	30 in
Corrosion allowance inside:	0 in
Corrosion allowance outside:	0 in
Weld joint efficiency top:	0.55
Weld joint efficiency bottom:	0.8
Nominal thickness, new:	0.375 in
Skirt is attached to:	HEAD # 2
Skirt attachment offset:	5.0298 in down from the top seam

Skirt design thickness, largest of the following + corrosion = 0.0217 in

The governing condition is due to earthquake, compressive stress at the base, operating & new.

The skirt thickness of 0.375 in is adequate.

Loading	Vessel Condition (Stress)	Governing Skirt Location	Temperature (°F)	Allowable Stress (psi)	Calculated Stress/E (psi)	Required thickness (in)
Wind	operating, corroded (+)	top	302	13,524.24	-311.29	0.0086
Wind	operating, corroded (-)	bottom	302	13,524.24	492.32	0.0137
Wind	operating, new (+)	top	302	13,524.24	-327.11	0.0091
Wind	operating, new (-)	bottom	302	13,524.24	511.24	0.0142
Wind	empty, corroded (+)	top	70	13,556.29	-36.58	0.001
Wind	empty, corroded (-)	bottom	70	13,556.29	218.31	0.006
Wind	empty, new (+)	top	70	13,556.29	-54.82	0.0015
Wind	empty, new (-)	bottom	70	13,556.29	239.58	0.0066
Wind	vacuum, corroded (+)	top	302	13,524.24	-311.29	0.0086
Wind	vacuum, corroded (-)	bottom	302	13,524.24	492.32	0.0137
Seismic	operating, corroded (+)	top	302	13,524.24	-110.18	0.0031
Seismic	operating, corroded (-)	bottom	302	13,524.24	750.86	0.0208
Seismic	operating, new (+)	top	302	13,524.24	-115.01	0.0032
Seismic	operating, new (-)	bottom	302	13,524.24	783.91	0.0217
Seismic	empty, corroded (+)	bottom	70	20,000	20.13	0.0004
Seismic	empty, corroded (-)	bottom	70	13,556.29	263.77	0.0073
Seismic	empty, new (+)	bottom	70	20,000	17.39	0.0003
Seismic	empty, new (-)	bottom	70	13,556.29	301.12	0.0083
Seismic	vacuum, corroded (+)	top	302	13,524.24	-110.18	0.0031
Seismic	vacuum, corroded (-)	bottom	302	13,524.24	750.86	0.0208

Loading due to earthquake, operating & new

Tensile side

Required thickness, tensile stress at base:

$$t = -W / (\pi * D * S_t * E) + 48 * M / (\pi * D^2 * S_t * E)$$
$$= -32{,}500.56 / (\pi * 66.375 * 13{,}524 * 1) + 48 * 39{,}822 / (\pi * 66.375^2 * 13{,}524 * 1)$$
$$= 0.0013 \text{ in}$$

Required thickness, tensile stress at the top:

$$t = -W_t / (\pi * D_t * S_t * E) + 48 * M_t / (\pi * D_t^2 * S_t * E)$$
$$= -31{,}858.81 / (\pi * 66.375 * 13{,}524 * 1) + 48 * 31{,}618.5 / (\pi * 66.375^2 * 13{,}524 * 1)$$
$$= 0.0032 \text{ in}$$

Compressive side

Required thickness, compressive stress at base:

$$t = W / (\pi * D * S_c * E_c) + 48 * M / (\pi * D^2 * S_c * E_c)$$
$$= 32{,}500.56 / (\pi * 66.375 * 13{,}524 * 1) + 48 * 39{,}822 / (\pi * 66.375^2 * 13{,}524 * 1)$$
$$= 0.0217 \text{ in}$$

Required thickness, compressive stress at the top:

$$t = W_t / (\pi * D_t * S_c * E_c) + 48 * M_t / (\pi * D_t^2 * S_c * E_c)$$
$$= 31{,}858.81 / (\pi * 66.375 * 13{,}524 * 1) + 48 * 31{,}618.5 / (\pi * 66.375^2 * 13{,}524 * 1)$$
$$= 0.0194 \text{ in}$$

BASE PLATE

Base configuration:	single base plate without gussets
Foundation compressive strength:	25,333 psi
Anchor bolt material:	SA-307
Anchor bolt allowable stress, S_b:	12,500 psi
Bolt circle, BC:	70 in
Anchor bolt corrosion allowance (applied to root radius):	0 in
Anchor bolt clearance:	0.125 in
Base plate material:	SA-516-70N
Base plate allowable stress, S_p:	25,333 psi
Base plate inner diameter, D_i:	62 in
Base plate outer diameter, D_o:	74 in
Base plate thickness, t_b:	1 in
Initial bolt preload:	100 % (12,500 psi)
Number of bolts, N:	8
Bolt size and type:	1 inch coarse threaded
Bolt root area (corroded), A_b:	0.551 in^2
Diameter of anchor bolt holes, d_b:	1.125 in

Load	Vessel condition	Base M (lb_f-ft)	W (lb)	Required bolt area (in^2)	t_r Base (in)	Foundation bearing stress (psi)
Wind	operating, corroded	10,170.9	31,502.2	0	0.3394	74.03
Wind	operating, new	10,338.6	32,860.6	0	0.3421	75.2
Wind	empty, corroded	10,215.4	10,043.3	0	0.2984	57.22
Wind	empty, new	10,378.1	11,589.3	0	0.3018	58.53
Wind	vacuum, corroded	10,170.9	31,502.2	0	0.3394	74.03
Seismic	operating, corroded	38,126.9	31,502.2	0	0.3756	90.66
Seismic	operating, new	39,822	32,860.6	0	0.3799	92.73
Seismic	empty, corroded	15,131.5	10,043.3	0.0033	0.3059	60.14
Seismic	empty, new	17,032.7	11,589.3	0.0009	0.3118	62.48
Seismic	vacuum, corroded	38,126.9	31,502.2	0	0.3756	90.66

Anchor bolt load (governing)

$P = -W / N + 48 * M / (N*BC)$
$= -10,043.31 / 8 + 48 * 15,131.5 / (8*70)$
$= 41.57\ lb_f$

Required area per bolt = $P / S_b = 0.0033\ in^2$

The area provided (0.551 in^2) by the specified anchor bolt is adequate.

Foundation bearing stress (governing)

$A_c = pi*(D_o^2 - D_i^2) / 4 - N*pi*d_b^2 / 4$
$= \pi*(74^2 - 62^2) / 4 - 8*\pi*1.125^2 / 4$
$= 1,273.8176\ in^2$

$I_c = \pi*(D_o^4 - D_i^4) / 64$
$= \pi*(74^4 - 62^4) / 64$
$= 746,630.9\ in^4$

$f_c = N*A_b*Preload / A_c + W / A_c + 6*M*D_o / I_c$
$= 8*0.551*12,500 / 1,273.8176 + 32,860.56 / 1,273.8176 + 6*39,822*74 / 746,630.9$
$= 93$ psi

As $f_c <= 25,333$ psi the base plate width is satisfactory.

Base plate required thickness (governing)

$t_r = (3*f_c*L^2 / S_p)^{0.5}$
$= (3*93*3.625^2 / 25,333)^{0.5}$
$= 0.3799$ in

The base plate thickness is satisfactory.

M1 (M1)

ASME Section VIII Division 1, 2010 Edition, A11 Addenda

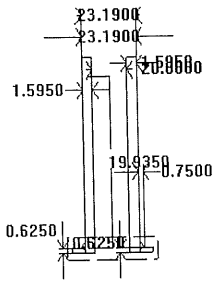

$t_{w(lower)}$ = 0.625 in

Leg_{41} = 0.75 in

Note. Per UW-16(b) minimum inside corner radius r_1 = min [1 / 4*t , 0.125 in] = 0.125 in

Location and Orientation

Located on:	SHELL
Orientation:	270°
Nozzle center line offset to datum line:	24 in
End of nozzle to shell center:	56 in
Passes through a Category A joint:	No

Nozzle

Access opening:	No
Material specification:	SA-350 LF2 Cl 1 (II-D p. 18, ln. 10)
Inside diameter, new:	20 in
Wall thickness, t_n:	1.595 in
Minimum wall thickness:	1.2825 in
Corrosion allowance:	0.125 in
Projection available outside vessel, Lpr:	20.685 in
Heavy barrel length, L_{hb}:	19.935 in
Projection available outside vessel to flange face, Lf:	22.375 in
Local vessel minimum thickness:	0.625 in
Liquid static head included:	5.2882 psi
Longitudinal joint efficiency:	1

ASME B16.5-2009 Flange

Description:	NPS 20 Class 150 HB A350 LF2 Cl.1 (Nut Stop)
Bolt Material:	SA-193 B7 Bolt <= 2 1/2 (II-D p. 334, ln. 32)
Blind included:	Yes
Rated MDMT:	-55°F

(Flange impact tested to -50°F
UCS-66(i) reduction of 28.1 °F applied (ratio = 0.719).)
(Flange rated MDMT = -78.1 °F
Bolts rated MDMT per Fig UCS-66 note (c) = -55 °F)

Liquid static head:	4.9273 psi
MAWP rating:	229.4 psi @ 302°F
MAP rating:	285 psi @ 70°F
Hydrotest rating:	450 psi @ 70°F
PWHT performed:	No

Reinforcement Calculations for Internal Pressure

UG-37 Area Calculation Summary (in^2) For P = 205.29 psi @ 302 °F The opening is adequately reinforced							UG-45 Nozzle Wall Thickness Summary (in) The nozzle passes UG-45	
A required	A available	A_1	A_2	A_3	A_5	A welds	t_{req}	t_{min}
6.9279	7.1731	3.1971	3.4135	--	--	0.5625	0.4531	1.2825

UG-41 Weld Failure Path Analysis Summary
The nozzle is exempt from weld strength calculations per UW-15(b)(1)

UW-16 Weld Sizing Summary			
Weld description	Required weld throat size (in)	Actual weld throat size (in)	Status
Nozzle to shell fillet (Leg_{41})	0.25	0.525	weld size is adequate

Reinforcement Calculations for External Pressure

UG-37 Area Calculation Summary (in^2) For Pe = 15 psi @ 302 °F The opening is adequately reinforced							UG-45 Nozzle Wall Thickness Summary (in) The nozzle passes UG-45	
A	A	A_1	A_2	A_3	A_5	A	t_{req}	t_{min}

required	available					welds		
3.1238	7.9239	3.8775	3.4839	--	--	0.5625	0.2015	1.2825

UG-41 Weld Failure Path Analysis Summary
Weld strength calculations are not required for external pressure

UW-16 Weld Sizing Summary			
Weld description	Required weld throat size (in)	Actual weld throat size (in)	Status
Nozzle to shell fillet (Leg_{41})	0.25	0.525	weld size is adequate

N1 (N1)

ASME Section VIII Division 1, 2010 Edition, A11 Addenda

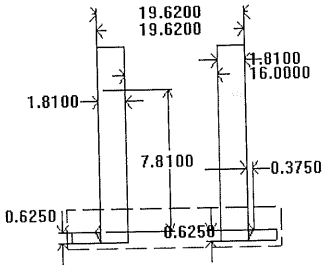

$t_{w(lower)}$ = 0.625 in

Leg_{41} = 0.375 in

Note: Per UW-16(b) minimum inside corner radius r_1 = min [1 / 4*t , 0.125 in] = 0.125 in

Location and Orientation

Located on:	SHELL
Orientation:	180°
Nozzle center line offset to datum line:	84 in
End of nozzle to shell center:	43.375 in
Passes through a Category A joint:	No

Nozzle

Access opening:	No
Material specification:	SA-350 LF2 Cl 1 (II-D p. 18, ln. 10)
Inside diameter, new:	16 in
Wall thickness, t_n:	1.81 in
Minimum wall thickness:	1.6225 in
Corrosion allowance:	0.125 in
Projection available outside vessel, Lpr:	8.31 in
Heavy barrel length, L_{hb}:	7.81 in
Projection available outside vessel to flange face, Lf:	9.75 in
Local vessel minimum thickness:	0.625 in
Liquid static head included:	3.0502 psi
Longitudinal joint efficiency:	1

ASME B16.5-2009 Flange

Description:	NPS 16 Class 150 HB A350 LF2 Cl.1 (Nut Stop)
Bolt Material:	SA-193 B7 Bolt <= 2 1/2 (II-D p. 334, ln. 32)
Blind included:	No
Rated MDMT:	-55°F

(Flange impact tested to -50°F
UCS-66(i) reduction of 28.9 °F applied (ratio = 0.7114).)
(Flange rated MDMT = -78.9 °F
Bolts rated MDMT per Fig UCS-66 note (c) = -55 °F)

Liquid static head:	2.7614 psi
MAWP rating:	229.4 psi @ 302°F
MAP rating:	285 psi @ 70°F
Hydrotest rating:	450 psi @ 70°F
PWHT performed:	No

Reinforcement Calculations for Internal Pressure

UG-37 Area Calculation Summary (in^2) For P = 203.05 psi @ 302 °F The opening is adequately reinforced							UG-45 Nozzle Wall Thickness Summary (in) The nozzle passes UG-45	
A required	A available	A_1	A_2	A_3	A_5	A welds	t_{req}	t_{min}
5.4984	6.7722	2.6266	4.005	--	--	0.1406	0.4531	1.6225

UG-41 Weld Failure Path Analysis Summary
The nozzle is exempt from weld strength calculations per UW-15(b)(1)

UW-16 Weld Sizing Summary			
Weld description	Required weld throat size (in)	Actual weld throat size (in)	Status
Nozzle to shell fillet (Leg_{41})	0.25	0.2625	weld size is adequate

Applied Loads

Radial load:	P_r =	2,806 lb_f
Circumferential moment:	M_c =	152,410 lb_f-in
Circumferential shear:	V_c =	3,435 lb_f
Longitudinal moment:	M_L =	152,410 lb_f-in
Longitudinal shear:	V_L =	3,435 lb_f
Torsion moment:	M_t =	215,427 lb_f-in
Internal pressure:	P =	203.05 psi
Mean shell radius:	R_m =	33.375 in
Local shell thickness:	t =	0.5 in
Shell yield stress:	S_y =	33,600 psi

Maximum stresses due to the applied loads at the nozzle OD (includes pressure)

R_m / t = 33.375 / 0.5 = 66.75

Pressure stress intensity factor, I = 1 (derived from PVP-Vol. 399, pages 77-82)

Local circumferential pressure stress = $I*P*R_i$ / t = 13,452 psi

Local longitudinal pressure stress = $I*P*R_i$ / (2*t) = 6,726 psi

Maximum combined stress (P_L+P_b+Q) = 40,521 psi
Allowable combined stress (P_L+P_b+Q) = +-3*S = +-60,000 psi

The maximum combined stress (P_L+P_b+Q) is within allowable limits.

Maximum local primary membrane stress (P_L) = 17,227 psi
Allowable local primary membrane stress (P_L) = +-1.5*S = +-30,000 psi

The maximum local primary membrane stress (P_L) is within allowable limits.

Stresses at the nozzle OD per WRC Bulletin 107										
Figure	value	β	A_u	A_l	B_u	B_l	C_u	C_l	D_u	D_l
3C*	3.1715	0.2572	0	0	0	0	-533	-533	-533	-533
4C*	7.0571	0.2572	-1,187	-1,187	-1,187	-1,187	0	0	0	0
1C	0.066	0.2572	0	0	0	0	-4,445	4,445	-4,445	4,445
2C-1	0.0155	0.2572	-1,044	1,044	-1,044	1,044	0	0	0	0
3A*	2.1535	0.2572	0	0	0	0	-2,291	-2,291	2,291	2,291
1A	0.0597	0.2572	0	0	0	0	-25,440	25,440	25,440	-25,440
3B*	4.6639	0.2572	-4,962	-4,962	4,962	4,962	0	0	0	0
1B-1	0.0132	0.2572	-5,625	5,625	5,625	-5,625	0	0	0	0
Pressure stress*			13,452	13,452	13,452	13,452	13,452	13,452	13,452	13,452
Total circumferential stress			634	13,972	21,808	12,646	-19,257	40,513	36,205	-5,785
Primary membrane circumferential stress*			7,303	7,303	17,227	17,227	10,628	10,628	15,210	15,210
3C*	3.1715	0.2572	-533	-533	-533	-533	0	0	0	0
4C*	7.0571	0.2572	0	0	0	0	-1,187	-1,187	-1,187	-1,187
1C-1	0.0362	0.2572	-2,438	2,438	-2,438	2,438	0	0	0	0
2C	0.0317	0.2572	0	0	0	0	-2,135	2,135	-2,135	2,135
4A*	6.217	0.2572	0	0	0	0	-6,615	-6,615	6,615	6,615
2A	0.0251	0.2572	0	0	0	0	-10,696	10,696	10,696	-10,696
4B*	2.3229	0.2572	-2,472	-2,472	2,472	2,472	0	0	0	0
2B-1	0.0224	0.2572	-9,545	9,545	9,545	-9,545	0	0	0	0
Pressure stress*			6,726	6,726	6,726	6,726	6,726	6,726	6,726	6,726
Total longitudinal stress			-8,262	15,704	15,772	1,558	-13,907	11,755	20,715	3,593
Primary membrane longitudinal stress*			3,721	3,721	8,665	8,665	-1,076	-1,076	12,154	12,154
Shear from M_t			713	713	713	713	713	713	713	713
Circ shear from V_c			223	223	-223	-223	0	0	0	0
Long shear from V_L			0	0	0	0	-223	-223	223	223
Total Shear stress			936	936	490	490	490	490	936	936
Combined stress (P_L+P_b+Q)			9,091	16,113	21,848	12,668	-19,302	40,521	36,261	9,563

Note: * denotes primary stress.

Longitudinal stress in the nozzle wall due to internal pressure + external loads

$\sigma_{n\ (Pm)} = P*R_i / (2*t_n) - P_r / (\pi*(R_o^2 - R_i^2)) + M*R_o / I$
$= 203.05*8.125 / (2*1.4975) - 2,806 / (\pi*(9.6225^2 - 8.125^2)) + 215,540.3*9.6225 / 3,310.6963$
$= 1,144$ psi

The average primary stress P_m (see Division 2 5.6.a.1) across the nozzle wall due to internal pressure + external loads is acceptable ($\leq S = 20,000$ psi)

Shear stress in the nozzle wall due to external loads

$\sigma_{shear} = (V_L^2 + V_c^2)^{0.5} / (\pi*R_i*t_n)$
$= (3,435^2 + 3,435^2)^{0.5} / (\pi*8.125*1.4975)$
$= 127$ psi

$\sigma_{torsion} = M_t / (2*\pi*R_i^2*t_n)$
$= 215,427 / (2*\pi*8.125^2*1.4975)$
$= 347$ psi

$\sigma_{total} = \sigma_{shear} + \sigma_{torsion}$
$= 127 + 347$
$= 474$ psi

UG-45: The total combined shear stress (474 psi) is below than the allowable ($0.7*S_n = 0.7*20,000 = 14,000$ psi)

Reinforcement Calculations for External Pressure

UG-37 Area Calculation Summary (in^2) For Pe = 15 psi @ 302 °F The opening is adequately reinforced							UG-45 Nozzle Wall Thickness Summary (in) The nozzle passes UG-45	
A required	A available	A_1	A_2	A_3	A_5	A welds	t_{req}	t_{min}
2.5067	7.3395	3.1115	4.0874	--	--	0.1406	0.1875	1.6225

UG-41 Weld Failure Path Analysis Summary
Weld strength calculations are not required for external pressure

UW-16 Weld Sizing Summary			
Weld description	Required weld throat size (in)	Actual weld throat size (in)	Status
Nozzle to shell fillet (Leg_{41})	0.25	0.2625	weld size is adequate

N2 (N2)

ASME Section VIII Division 1, 2010 Edition, A11 Addenda

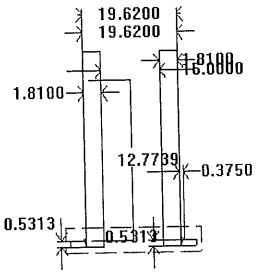

$t_{w(lower)}$ = 0.5313 in

Leg_{41} = 0.375 in

Note: Per UW-16(b) minimum inside corner radius r_1 = min [1 / 4*t , 0.125 in] = 0.1016 in

Location and Orientation

Located on:	HEAD # 1
Orientation:	0°
End of nozzle to datum line:	177 in
Calculated as hillside:	No
Distance to head center, R:	0 in
Passes through a Category A joint:	No

Nozzle

Access opening:	No
Material specification:	SA-350 LF2 Cl 1 (II-D p. 18, ln. 10)
Inside diameter, new:	16 in
Wall thickness, t_n:	1.81 in
Minimum wall thickness:	1.6225 in
Corrosion allowance:	0.125 in
Projection available outside vessel, Lpr:	13.2739 in
Heavy barrel length, L_{hb}:	12.7739 in
Projection available outside vessel to flange face, Lf:	14.7139 in
Local vessel minimum thickness:	0.5313 in
Liquid static head included:	0 psi
Longitudinal joint efficiency:	1

ASME B16.5-2009 Flange

Description:	NPS 16 Class 150 HB A350 LF2 Cl.1 (Nut Stop)
Bolt Material:	SA-193 B7 Bolt <= 2 1/2 (II-D p. 334, ln. 32)
Blind included:	No
Rated MDMT:	-55°F

(Flange impact tested to -50°F
UCS-66(i) reduction of 29.8 °F applied (ratio = 0.7018).)
(Flange rated MDMT = -79.8 °F
Bolts rated MDMT per Fig UCS-66 note (c) = -55 °F)

Liquid static head:	0 psi
MAWP rating:	229.4 psi @ 302°F
MAP rating:	285 psi @ 70°F
Hydrotest rating:	450 psi @ 70°F
PWHT performed:	No

Reinforcement Calculations for Internal Pressure

UG-37 Area Calculation Summary (in^2) For P = 200 psi @ 302 °F The opening is adequately reinforced							UG-45 Nozzle Wall Thickness Summary (in) The nozzle passes UG-45	
A required	A available	A_1	A_2	A_3	A_5	A welds	t_{req}	t_{min}
4.8311	5.1689	1.7712	3.2571	--	--	0.1406	0.4531	1.6225

UG-41 Weld Failure Path Analysis Summary
The nozzle is exempt from weld strength calculations per UW-15(b)(1)

UW-16 Weld Sizing Summary			
Weld description	Required weld throat size (in)	Actual weld throat size (in)	Status
Nozzle to shell fillet (Leg_{41})	0.25	0.2625	weld size is adequate

Applied Loads

Radial load:	P_r =	2,806 lb_f
Circumferential moment:	M_1 =	152,410 lb_f-in
Circumferential shear:	V_2 =	3,435 lb_f
Longitudinal moment:	M_2 =	152,410 lb_f-in
Longitudinal shear:	V_1 =	3,435 lb_f
Torsion moment:	M_t =	215,427 lb_f-in
Internal pressure:	P =	200 psi
Head yield stress:	S_y =	33,600 psi

Maximum stresses due to the applied loads at the nozzle OD (includes pressure)

Mean dish radius R_m = 60.0252 in

$U = r_o / Sqr(R_m*t)$ = 1.986
Pressure stress intensity factor, I = 1 (derived from PVP-Vol. 399, pages 77-82)

Local pressure stress = $I*P*R_i / (2*t)$ = 14,724 psi

Maximum combined stress (P_L+P_b+Q) = 33,287 psi
Allowable combined stress (P_L+P_b+Q) = +-3*S = +-60,000 psi

The maximum combined stress (P_L+P_b+Q) is within allowable limits.

Maximum local primary membrane stress (P_L) = 18,370 psi
Allowable local primary membrane stress (P_L) = +-1.5*S = +-30,000 psi

The maximum local primary membrane stress (P_L) is within allowable limits.

Stresses at the nozzle OD per WRC Bulletin 107									
Figure	value	A_u	A_l	B_u	B_l	C_u	C_l	D_u	D_l
SR-2*	0.0253	-430	-430	-430	-430	-430	-430	-430	-430
SR-2	0.012	-1,224	1,224	-1,224	1,224	-1,224	1,224	-1,224	1,224
SR-3*	0.0218	0	0	0	0	-4,076	-4,076	4,076	4,076
SR-3	0.0143	0	0	0	0	-16,040	16,040	16,040	-16,040
SR-3*	0.0218	-4,076	-4,076	4,076	4,076	0	0	0	0
SR-3	0.0143	-16,040	16,040	16,040	-16,040	0	0	0	0
Pressure stress*		14,724	14,724	14,724	14,724	14,724	14,724	14,724	14,724
Total O_x stress		-7,046	27,482	33,186	3,554	-7,046	27,482	33,186	3,554
Membrane O_x stress*		10,218	10,218	18,370	18,370	10,218	10,218	18,370	18,370
SR-2*	0.0076	-129	-129	-129	-129	-129	-129	-129	-129
SR-2	0.0036	-367	367	-367	367	-367	367	-367	367
SR-3*	0.0065	0	0	0	0	-1,215	-1,215	1,215	1,215
SR-3	0.0042	0	0	0	0	-4,711	4,711	4,711	-4,711
SR-3*	0.0065	-1,215	-1,215	1,215	1,215	0	0	0	0
SR-3	0.0042	-4,711	4,711	4,711	-4,711	0	0	0	0
Pressure stress*		14,724	14,724	14,724	14,724	14,724	14,724	14,724	14,724
Total O_y stress		8,302	18,458	20,154	11,466	8,302	18,458	20,154	11,466
Membrane O_y stress*		13,380	13,380	15,810	15,810	13,380	13,380	15,810	15,810
Shear from M_t		877	877	877	877	877	877	877	877
Shear from V_1		0	0	0	0	-274	-274	274	274
Shear from V_2		274	274	-274	-274	0	0	0	0
Total Shear stress		1,151	1,151	603	603	603	603	1,151	1,151
Combined stress (P_L+P_s+Q)		15,520	27,626	33,214	11,512	15,395	27,522	33,287	11,630

Notes: (1) * denotes primary stress.

(2) The nozzle is assumed to be a rigid (solid) attachment.

Longitudinal stress in the nozzle wall due to internal pressure + external loads

$\sigma_{n\ (Pm)} = P*R_i / (2*t_n) - P_r / (\pi*(R_o^2 - R_i^2)) + M*R_o / I$
$= 200*8.125 / (2*1.4975) - 2,806 / (\pi*(9.6225^2 - 8.125^2)) + 215,540.3*9.6225 / 3,310.6963$
$= 1,135$ psi

The average primary stress P_m (see Division 2 5.6.a.1) across the nozzle wall due to internal pressure + external loads is acceptable ($\leq S = 20,000$ psi)

Shear stress in the nozzle wall due to external loads

$\sigma_{shear} = (V_L^2 + V_c^2)^{0.5} / (\pi*R_i*t_n)$
$= (3,435^2 + 3,435^2)^{0.5} / (\pi*8.125*1.4975)$
$= 127$ psi

$\sigma_{torsion} = M_t / (2*\pi*R_i^2*t_n)$
$= 215,427 / (2*\pi*8.125^2*1.4975)$
$= 347$ psi

$\sigma_{total} = \sigma_{shear} + \sigma_{torsion}$
$= 127 + 347$
$= 474$ psi

UG-45: The total combined shear stress (474 psi) is below than the allowable ($0.7*S_n = 0.7*20,000 = 14,000$ psi)

Reinforcement Calculations for External Pressure

UG-37 Area Calculation Summary (in²) For Pe = 15 psi @ 302 °F The opening is adequately reinforced							UG-45 Nozzle Wall Thickness Summary (in) The nozzle passes UG-45	
A required	A available	A_1	A_2	A_3	A_5	A welds	t_{req}	t_{min}
1.3949	7.2637	3.8126	3.3105	--	--	0.1406	0.1875	1.6225

UG-41 Weld Failure Path Analysis Summary
Weld strength calculations are not required for external pressure

UW-16 Weld Sizing Summary			
Weld description	Required weld throat size (in)	Actual weld throat size (in)	Status
Nozzle to shell fillet (Leg_{41})	0.25	0.2625	weld size is adequate

N3 (N3)

ASME Section VIII Division 1, 2010 Edition, A11 Addenda

$t_{w(lower)}$ = 0.625 in

Leg_{41} = 0.375 in

Leg_{43} = 0.375 in

h_{new} = 0.75 in

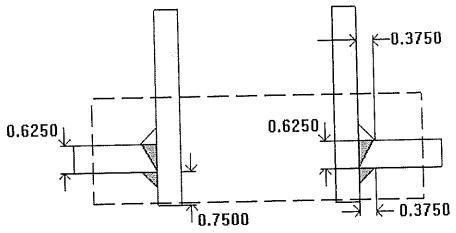

Note: round inside edges per UG-76(c)

Location and Orientation

Located on:	SHELL
Orientation:	0°
Nozzle center line offset to datum line:	8 in
End of nozzle to shell center:	41.625 in
Passes through a Category A joint:	No

Nozzle

Access opening:	No
Material specification:	SA-106 B Smls pipe (II-D p. 10, ln. 40)
Description:	NPS 4 Sch 160
Inside diameter, new:	3.438 in
Nominal wall thickness:	0.531 in
Corrosion allowance:	0.125 in
Projection available outside vessel, Lpr:	5 in
Internal projection, h_{new}:	0.75 in
Projection available outside vessel to flange face, Lf:	8 in
Local vessel minimum thickness:	0.625 in
Liquid static head included:	5.5669 psi
Longitudinal joint efficiency:	1

ASME B16.5-2009 Flange

Description:	NPS 4 Class 150 WN A350 LF2 Cl.1
Bolt Material:	SA-193 B7 Bolt <= 2 1/2 (II-D p. 334, ln. 32)
Blind included:	No
Rated MDMT:	-55°F
(UG-84 provisions apply)	
(Flange impact tested to -55°F (UCS-66(g)))	
Liquid static head:	5.5048 psi
MAWP rating:	229.4 psi @ 302°F
MAP rating:	285 psi @ 70°F
Hydrotest rating:	450 psi @ 70°F
PWHT performed:	No
Circumferential joint radiography:	Full UW-11(a) Type 1

Reinforcement Calculations for Internal Pressure

UG-37 Area Calculation Summary (in^2) For P = 205.57 psi @ 302 °F The opening is adequately reinforced							UG-45 Nozzle Wall Thickness Summary (in) The nozzle passes UG-45	
A required	A available	A_1	A_2	A_3	A_5	A welds	t_{req}	t_{min}
1.3038	1.6815	0.562	0.666	0.3003	--	0.1532	0.3324	0.4646

UG-41 Weld Failure Path Analysis Summary
The nozzle is exempt from weld strength calculations per UW-15(b)(1)

UW-16 Weld Sizing Summary			
Weld description	Required weld throat size (in)	Actual weld throat size (in)	Status
Nozzle to shell fillet (Leg_{41})	0.25	0.2625	weld size is adequate

Applied Loads

Radial load:	P_r =	486 lb_f
Circumferential moment:	M_c =	9,647 lb_f-in
Circumferential shear:	V_c =	589 lb_f
Longitudinal moment:	M_L =	9,647 lb_f-in
Longitudinal shear:	V_L =	589 lb_f
Torsion moment:	M_t =	13,630 lb_f-in
Internal pressure:	P =	205.567 psi
Mean shell radius:	R_m =	33.375 in
Local shell thickness:	t =	0.5 in
Shell yield stress:	S_y =	33,600 psi

Maximum stresses due to the applied loads at the nozzle OD (includes pressure)

R_m / t = 33.375 / 0.5 = 66.75

Pressure stress intensity factor, I = 1.17436 (derived from PVP-Vol. 399, pages 77-82)

Local circumferential pressure stress = I*P*R_i / t = 15,994 psi

Local longitudinal pressure stress = I*P*R_i / (2*t) = 7,997 psi

Maximum combined stress (P_L+P_b+Q) = 26,495 psi
Allowable combined stress (P_L+P_b+Q) = +-3*S = +-60,000 psi

The maximum combined stress (P_L+P_b+Q) is within allowable limits.

Maximum local primary membrane stress (P_L) = 17,294 psi
Allowable local primary membrane stress (P_L) = +-1.5*S = +-30,000 psi

The maximum local primary membrane stress (P_L) is within allowable limits.

Stresses at the nozzle OD per WRC Bulletin 107										
Figure	value	β	A_u	A_l	B_u	B_l	C_u	C_l	D_u	D_l
3C*	11.5023	0.059	0	0	0	0	-335	-335	-335	-335
4C*	11.9148	0.059	-347	-347	-347	-347	0	0	0	0
1C	0.1544	0.059	0	0	0	0	-1,801	1,801	-1,801	1,801
2C-1	0.1165	0.059	-1,359	1,359	-1,359	1,359	0	0	0	0
3A*	1.5761	0.059	0	0	0	0	-463	-463	463	463
1A	0.1006	0.059	0	0	0	0	-11,831	11,831	11,831	-11,831
3B*	5.6101	0.059	-1,647	-1,647	1,647	1,647	0	0	0	0
1B-1	0.0528	0.059	-6,209	6,209	6,209	-6,209	0	0	0	0
Pressure stress*			15,994	15,994	15,994	15,994	13,619	13,619	13,619	13,619
Total circumferential stress			6,432	21,568	22,144	12,444	-811	26,453	23,777	3,717
Primary membrane circumferential stress*			14,000	14,000	17,294	17,294	12,821	12,821	13,747	13,747
3C*	11.5023	0.059	-335	-335	-335	-335	0	0	0	0
4C*	11.9148	0.059	0	0	0	0	-347	-347	-347	-347
1C-1	0.1543	0.059	-1,800	1,800	-1,800	1,800	0	0	0	0
2C	0.1153	0.059	0	0	0	0	-1,345	1,345	-1,345	1,345
4A*	2.1753	0.059	0	0	0	0	-639	-639	639	639
2A	0.0583	0.059	0	0	0	0	-6,856	6,856	6,856	-6,856
4B*	1.57	0.059	-461	-461	461	461	0	0	0	0
2B-1	0.0874	0.059	-10,278	10,278	10,278	-10,278	0	0	0	0
Pressure stress*			6,810	6,810	6,810	6,810	7,997	7,997	7,997	7,997
Total longitudinal stress			-6,064	18,092	15,414	-1,542	-1,190	15,212	13,800	2,778
Primary membrane longitudinal stress*			6,014	6,014	6,936	6,936	7,011	7,011	8,289	8,289
Shear from M_t			857	857	857	857	857	857	857	857
Circ shear from V_c			167	167	-167	-167	0	0	0	0
Long shear from V_L			0	0	0	0	-167	-167	167	167
Total Shear stress			1,024	1,024	690	690	690	690	1,024	1,024
Combined stress (P_L+P_s+Q)			12,663	21,847	22,214	14,054	-1,716	26,495	23,881	4,374

Note: * denotes primary stress.

Longitudinal stress in the nozzle wall due to internal pressure + external loads

$\sigma_{n\,(Pm)} = P*R_i / (2*t_n) - P_r / (\pi*(R_o^2 - R_i^2)) + M*R_o / I$
$= 205.57*1.844 / (2*0.3396) - 486 / (\pi*(2.25^2 - 1.844^2)) + 13{,}642.9*2.25 / 11.0479$
$= 3{,}243$ psi

The average primary stress P_m (see Division 2 5.6.a.1) across the nozzle wall due to internal pressure + external loads is acceptable ($\leq S = 17{,}100$ psi)

Shear stress in the nozzle wall due to external loads

$\sigma_{shear} = (V_L^2 + V_c^2)^{0.5} / (\pi*R_i*t_n)$
$= (589^2 + 589^2)^{0.5} / (\pi*1.844*0.406)$
$= 354$ psi

$\sigma_{torsion} = M_t / (2*\pi*R_i^2*t_n)$
$= 13{,}630 / (2*\pi*1.844^2*0.406)$
$= 1{,}571$ psi

$\sigma_{total} = \sigma_{shear} + \sigma_{torsion}$
$= 354 + 1{,}571$
$= 1{,}925$ psi

UG-45: The total combined shear stress (1,925 psi) is below than the allowable ($0.7*S_n = 0.7*17{,}100 = 11{,}970$ psi)

Reinforcement Calculations for External Pressure

UG-37 Area Calculation Summary (in^2) For Pe = 15 psi @ 302 °F The opening is adequately reinforced							UG-45 Nozzle Wall Thickness Summary (in) The nozzle passes UG-45	
A required	A available	A_1	A_2	A_3	A_5	A welds	t_{req}	t_{min}
0.5871	1.8097	0.6836	0.6726	0.3003	--	0.1532	0.1875	0.4646

UG-41 Weld Failure Path Analysis Summary
Weld strength calculations are not required for external pressure

UW-16 Weld Sizing Summary			
Weld description	Required weld throat size (in)	Actual weld throat size (in)	Status
Nozzle to shell fillet (Leg_{41})	0.25	0.2625	weld size is adequate

N5 (N5)

ASME Section VIII Division 1, 2010 Edition, A11 Addenda

$t_{w(lower)}$ = 0.625 in

Leg_{41} = 0.375 in

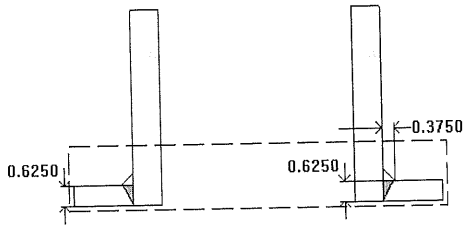

Note: round inside edges per UG-76(c)

Location and Orientation

Located on:	SHELL
Orientation:	90°
Nozzle center line offset to datum line:	106 in
End of nozzle to shell center:	41.625 in
Passes through a Category A joint:	No

Nozzle

Access opening:	No
Material specification:	SA-350 LF2 Cl 1 (II-D p. 18, ln. 10)
Inside diameter, new:	6 in
Nominal wall thickness:	0.875 in
Corrosion allowance:	0.125 in
Projection available outside vessel, Lpr:	7 in
Projection available outside vessel to flange face, Lf:	8 in
Local vessel minimum thickness:	0.625 in
Liquid static head included:	2.0756 psi
Longitudinal joint efficiency:	1

ASME B16.5-2009 Flange

Description:	NPS 6 Class 150 LWN A350 LF2 Cl.1
Bolt Material:	SA-193 B7 Bolt <= 2 1/2 (II-D p. 334, ln. 32)
Blind included:	No
Rated MDMT:	-55°F

(Flange impact tested to -50°F
UCS-66(i) reduction of 29.1 °F applied (ratio = 0.7087).)
(Flange rated MDMT = -79.1 °F
Bolts rated MDMT per Fig UCS-66 note (c) = -55 °F)

Liquid static head:	1.9673 psi
MAWP rating:	229.4 psi @ 302°F
MAP rating:	285 psi @ 70°F
Hydrotest rating:	450 psi @ 70°F
PWHT performed:	No

Reinforcement Calculations for Internal Pressure

UG-37 Area Calculation Summary (in^2) For P = 202.08 psi @ 302 °F The opening is adequately reinforced							UG-45 Nozzle Wall Thickness Summary (in) The nozzle passes UG-45	
A required	A available	A_1	A_2	A_3	A_5	A welds	t_{req}	t_{min}
2.1046	2.9565	1.0204	1.7955	--	--	0.1406	0.4068	0.875

UG-41 Weld Failure Path Analysis Summary
The nozzle is exempt from weld strength calculations per UW-15(b)(1)

UW-16 Weld Sizing Summary			
Weld description	Required weld throat size (in)	Actual weld throat size (in)	Status
Nozzle to shell fillet (Leg_{41})	0.25	0.2625	weld size is adequate

Applied Loads

Radial load:	P_r =	850 lb_f
Circumferential moment:	M_c =	25,490 lb_f-in
Circumferential shear:	V_c =	1,041 lb_f
Longitudinal moment:	M_L =	25,490 lb_f-in
Longitudinal shear:	V_L =	1,041 lb_f
Torsion moment:	M_t =	36,023 lb_f-in
Internal pressure:	P =	202.076 psi
Mean shell radius:	R_m =	33.375 in
Local shell thickness:	t =	0.5 in
Shell yield stress:	S_y =	33,600 psi

Maximum stresses due to the applied loads at the nozzle OD (includes pressure)

$R_m / t = 33.375 / 0.5 = 66.75$

Pressure stress intensity factor, I = 1.29937 (derived from PVP-Vol. 399, pages 77-82)

Local circumferential pressure stress = $I*P*R_i / t$ =17,396 psi

Local longitudinal pressure stress = $I*P*R_i / (2*t)$ =8,698 psi

Maximum combined stress (P_L+P_b+Q) = 30,284 psi
Allowable combined stress (P_L+P_b+Q) = +-3*S = +-60,000 psi

The maximum combined stress (P_L+P_b+Q) is within allowable limits.

Maximum local primary membrane stress (P_L) = 20,242 psi
Allowable local primary membrane stress (P_L) = +-1.5*S = +-30,000 psi

The maximum local primary membrane stress (P_L) is within allowable limits.

Stresses at the nozzle OD per WRC Bulletin 107										
Figure	value	β	A_u	A_l	B_u	B_l	C_u	C_l	D_u	D_l
3C*	8.9246	0.1016	0	0	0	0	-455	-455	-455	-455
4C*	10.9554	0.1016	-558	-558	-558	-558	0	0	0	0
1C	0.1029	0.1016	0	0	0	0	-2,099	2,099	-2,099	2,099
2C-1	0.0687	0.1016	-1,401	1,401	-1,401	1,401	0	0	0	0
3A*	2.4455	0.1016	0	0	0	0	-1,102	-1,102	1,102	1,102
1A	0.0905	0.1016	0	0	0	0	-16,329	16,329	16,329	-16,329
3B*	7.5558	0.1016	-3,404	-3,404	3,404	3,404	0	0	0	0
1B-1	0.0393	0.1016	-7,091	7,091	7,091	-7,091	0	0	0	0
Pressure stress*			17,396	17,396	17,396	17,396	13,388	13,388	13,388	13,388
Total circumferential stress			4,942	21,926	25,932	14,552	-6,597	30,259	28,265	-195
Primary membrane circumferential stress*			13,434	13,434	20,242	20,242	11,831	11,831	14,035	14,035
3C*	8.9246	0.1016	-455	-455	-455	-455	0	0	0	0
4C*	10.9554	0.1016	0	0	0	0	-558	-558	-558	-558
1C-1	0.1039	0.1016	-2,120	2,120	-2,120	2,120	0	0	0	0
2C	0.0688	0.1016	0	0	0	0	-1,404	1,404	-1,404	1,404
4A*	3.8171	0.1016	0	0	0	0	-1,720	-1,720	1,720	1,720
2A	0.048	0.1016	0	0	0	0	-8,660	8,660	8,660	-8,660
4B*	2.38	0.1016	-1,072	-1,072	1,072	1,072	0	0	0	0
2B-1	0.0593	0.1016	-10,699	10,699	10,699	-10,699	0	0	0	0
Pressure stress*			6,694	6,694	6,694	6,694	8,698	8,698	8,698	8,698
Total longitudinal stress			-7,652	17,986	15,890	-1,268	-3,644	16,484	17,116	2,604
Primary membrane longitudinal stress*			5,167	5,167	7,311	7,311	6,420	6,420	9,860	9,860
Shear from M_t			764	764	764	764	764	764	764	764
Circ shear from V_c			171	171	-171	-171	0	0	0	0
Long shear from V_L			0	0	0	0	-171	-171	171	171
Total Shear stress			935	935	593	593	593	593	935	935
Combined stress (P_L+P_s+Q)			12,732	22,137	25,967	15,864	-6,712	30,284	28,343	3,366

Note: * denotes primary stress.

Longitudinal stress in the nozzle wall due to internal pressure + external loads

$\sigma_{n\,(Pm)} = P*R_i / (2*t_n) - P_r / (\pi*(R_o^2 - R_i^2)) + M*R_o / I$
$= 202.08*3.125 / (2*0.75) - 850 / (\pi*(3.875^2 - 3.125^2)) + 36{,}048.3*3.875 / 102.1815$
$= 1{,}737$ psi

The average primary stress P_m (see Division 2 5.6.a.1) across the nozzle wall due to internal pressure + external loads is acceptable ($\leq S = 20{,}000$ psi)

Shear stress in the nozzle wall due to external loads

$\sigma_{shear} = (V_L^2 + V_c^2)^{0.5} / (\pi*R_i*t_n)$
$= (1{,}041^2 + 1{,}041^2)^{0.5} / (\pi*3.125*0.75)$
$= 200$ psi

$\sigma_{torsion} = M_t / (2*\pi*R_i^2*t_n)$
$= 36{,}023 / (2*\pi*3.125^2*0.75)$
$= 783$ psi

$\sigma_{total} = \sigma_{shear} + \sigma_{torsion}$
$= 200 + 783$
$= 983$ psi

UG-45: The total combined shear stress (983 psi) is below than the allowable ($0.7*S_n = 0.7*20{,}000 = 14{,}000$ psi)

Reinforcement Calculations for External Pressure

UG-37 Area Calculation Summary (in^2) For Pe = 15 psi @ 302 °F The opening is adequately reinforced							UG-45 Nozzle Wall Thickness Summary (in) The nozzle passes UG-45	
A required	A available	A_1	A_2	A_3	A_5	A welds	t_{req}	t_{min}
0.9641	3.1483	1.1968	1.8109	--	--	0.1406	0.1875	0.875

UG-41 Weld Failure Path Analysis Summary
Weld strength calculations are not required for external pressure

UW-16 Weld Sizing Summary			
Weld description	Required weld throat size (in)	Actual weld throat size (in)	Status
Nozzle to shell fillet (Leg_{41})	0.25	0.2625	weld size is adequate

N6A (N6A)

ASME Section VIII Division 1, 2010 Edition, A11 Addenda

$t_{w(lower)}$ = 0.625 in

Leg_{41} = 0.375 in

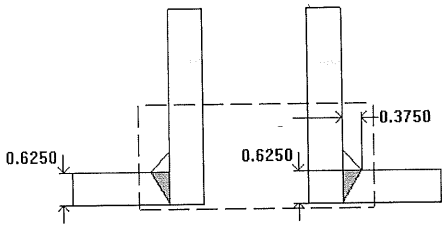

Note: round inside edges per UG-76(c)

Location and Orientation

Located on:	SHELL
Orientation:	45°
Nozzle center line offset to datum line:	53 in
End of nozzle to shell center:	41.625 in
Passes through a Category A joint:	No

Nozzle

Access opening:	No
Material specification:	SA-350 LF2 Cl 1 (II-D p. 18, ln. 10)
Inside diameter, new:	2 in
Nominal wall thickness:	0.655 in
Corrosion allowance:	0.125 in
Projection available outside vessel, Lpr:	7.12 in
Projection available outside vessel to flange face, Lf:	8 in
Local vessel minimum thickness:	0.625 in
Liquid static head included:	3.9165 psi
Longitudinal joint efficiency:	1

ASME B16.5-2009 Flange

Description:	NPS 2 Class 300 LWN A350 LF2 Cl.1
Bolt Material:	SA-193 B7 Bolt <= 2 1/2 (II-D p. 334, ln. 32)
Blind included:	No
Rated MDMT:	-55°F

(Flange impact tested to -50°F
UCS-66(i) reduction of 140 °F applied (ratio = 0.2755).)
(Flange rated MDMT = -155 °F
Bolts rated MDMT per Fig UCS-66 note (c) = -55 °F)

Liquid static head:	3.8804 psi
MAWP rating:	654.6 psi @ 302°F
MAP rating:	740 psi @ 70°F
Hydrotest rating:	1,125 psi @ 70°F
PWHT performed:	No

Reinforcement Calculations for Internal Pressure

UG-37 Area Calculation Summary (in^2) For P = 203.92 psi @ 302 °F The opening is adequately reinforced							UG-45 Nozzle Wall Thickness Summary (in) The nozzle passes UG-45	
A required	A available	A_1	A_2	A_3	A_5	A welds	t_{req}	t_{min}
0.7646	1.7973	0.3604	1.2963	--	--	0.1406	0.314	0.655

UG-41 Weld Failure Path Analysis Summary
The nozzle is exempt from weld strength calculations per UW-15(b)(1)

UW-16 Weld Sizing Summary			
Weld description	Required weld throat size (in)	Actual weld throat size (in)	Status
Nozzle to shell fillet (Leg_{41})	0.25	0.2625	weld size is adequate

Reinforcement Calculations for External Pressure

UG-37 Area Calculation Summary (in^2) For Pe = 15 psi @ 302 °F The opening is adequately reinforced							UG-45 Nozzle Wall Thickness Summary (in) The nozzle passes UG-45	
A required	A available	A_1	A_2	A_3	A_5	A welds	t_{req}	t_{min}
0.3471	1.858	0.4308	1.2866	--	--	0.1406	0.1875	0.655

UG-41 Weld Failure Path Analysis Summary
Weld strength calculations are not required for external pressure

UW-16 Weld Sizing Summary			
Weld description	Required weld throat size (in)	Actual weld throat size (in)	Status
Nozzle to shell fillet (Leg_{41})	0.25	0.2625	weld size is adequate

N6B (N6B)

ASME Section VIII Division 1, 2010 Edition, A11 Addenda

$t_{w(lower)}$ = 0.625 in

Leg_{41} = 0.375 in

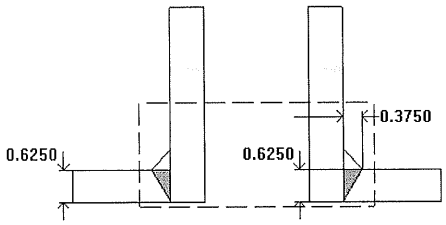

Note: round inside edges per UG-76(c)

Location and Orientation

Located on:	SHELL
Orientation:	45°
Nozzle center line offset to datum line:	19 in
End of nozzle to shell center:	41.625 in
Passes through a Category A joint:	No

Nozzle

Access opening:	No
Material specification:	SA-350 LF2 Cl 1 (II-D p. 18, ln. 10)
Inside diameter, new:	2 in
Nominal wall thickness:	0.655 in
Corrosion allowance:	0.125 in
Projection available outside vessel, Lpr:	7.12 in
Projection available outside vessel to flange face, Lf:	8 in
Local vessel minimum thickness:	0.625 in
Liquid static head included:	5.1438 psi
Longitudinal joint efficiency:	1

ASME B16.5-2009 Flange

Description:	NPS 2 Class 300 LWN A350 LF2 Cl.1
Bolt Material:	SA-193 B7 Bolt <= 2 1/2 (II-D p. 334, ln. 32)
Blind included:	No
Rated MDMT:	-55°F

(Flange impact tested to -50°F
UCS-66(i) reduction of 140 °F applied (ratio = 0.2772).)
(Flange rated MDMT = -155 °F
Bolts rated MDMT per Fig UCS-66 note (c) = -55 °F)

Liquid static head:	5.1077 psi
MAWP rating:	654.6 psi @ 302°F
MAP rating:	740 psi @ 70°F
Hydrotest rating:	1,125 psi @ 70°F
PWHT performed:	No

Reinforcement Calculations for Internal Pressure

UG-37 Area Calculation Summary (in^2) For P = 205.14 psi @ 302 °F The opening is adequately reinforced							UG-45 Nozzle Wall Thickness Summary (in) The nozzle passes UG-45	
A required	A available	A_1	A_2	A_3	A_5	A welds	t_{req}	t_{min}
0.7692	1.7924	0.3558	1.296	--	--	0.1406	0.314	0.655

UG-41 Weld Failure Path Analysis Summary
The nozzle is exempt from weld strength calculations per UW-15(b)(1)

UW-16 Weld Sizing Summary			
Weld description	Required weld throat size (in)	Actual weld throat size (in)	Status
Nozzle to shell fillet (Leg_{41})	0.25	0.2625	weld size is adequate

Reinforcement Calculations for External Pressure

UG-37 Area Calculation Summary (in^2) For Pe = 15 psi @ 302 °F The opening is adequately reinforced							UG-45 Nozzle Wall Thickness Summary (in) The nozzle passes UG-45	
A required	A available	A_1	A_2	A_3	A_5	A welds	t_{req}	t_{min}
0.3471	1.858	0.4308	1.2866	--	--	0.1406	0.1875	0.655

UG-41 Weld Failure Path Analysis Summary
Weld strength calculations are not required for external pressure

UW-16 Weld Sizing Summary			
Weld description	**Required weld throat size (in)**	**Actual weld throat size (in)**	**Status**
Nozzle to shell fillet (Leg_{41})	0.25	0.2625	weld size is adequate

N7A (N7A)

ASME Section VIII Division 1, 2010 Edition, A11 Addenda

$t_{w(lower)}$ = 0.625 in

Leg_{41} = 0.375 in

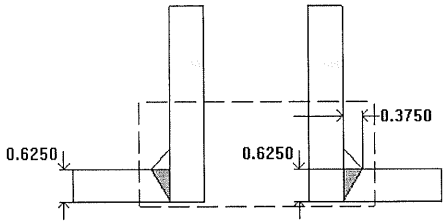

Note: round inside edges per UG-76(c)

Location and Orientation

Located on:	SHELL
Orientation:	135°
Nozzle center line offset to datum line:	53 in
End of nozzle to shell center:	41.625 in
Passes through a Category A joint:	No

Nozzle

Access opening:	No
Material specification:	SA-350 LF2 Cl 1 (II-D p. 18, ln. 10)
Inside diameter, new:	2 in
Nominal wall thickness:	0.655 in
Corrosion allowance:	0.125 in
Projection available outside vessel, Lpr:	7.12 in
Projection available outside vessel to flange face, Lf:	8 in
Local vessel minimum thickness:	0.625 in
Liquid static head included:	3.9165 psi
Longitudinal joint efficiency:	1

ASME B16.5-2009 Flange

Description:	NPS 2 Class 300 LWN A350 LF2 Cl.1
Bolt Material:	SA-193 B7 Bolt <= 2 1/2 (II-D p. 334, ln. 32)
Blind included:	No
Rated MDMT:	-55°F

(Flange impact tested to -50°F
UCS-66(i) reduction of 140 °F applied (ratio = 0.2755).)
(Flange rated MDMT = -155 °F
Bolts rated MDMT per Fig UCS-66 note (c) = -55 °F)

Liquid static head:	3.8804 psi
MAWP rating:	654.6 psi @ 302°F
MAP rating:	740 psi @ 70°F
Hydrotest rating:	1,125 psi @ 70°F
PWHT performed:	No

Reinforcement Calculations for Internal Pressure

UG-37 Area Calculation Summary (in^2) For P = 203.92 psi @ 302 °F The opening is adequately reinforced							UG-45 Nozzle Wall Thickness Summary (in) The nozzle passes UG-45	
A required	A available	A_1	A_2	A_3	A_5	A welds	t_{req}	t_{min}
0.7646	1.7973	0.3604	1.2963	--	--	0.1406	0.314	0.655

UG-41 Weld Failure Path Analysis Summary
The nozzle is exempt from weld strength calculations per UW-15(b)(1)

UW-16 Weld Sizing Summary			
Weld description	Required weld throat size (in)	Actual weld throat size (in)	Status
Nozzle to shell fillet (Leg_{41})	0.25	0.2625	weld size is adequate

Reinforcement Calculations for External Pressure

UG-37 Area Calculation Summary (in^2) For Pe = 15 psi @ 302 °F The opening is adequately reinforced							UG-45 Nozzle Wall Thickness Summary (in) The nozzle passes UG-45	
A required	A available	A_1	A_2	A_3	A_5	A welds	t_{req}	t_{min}
0.3471	1.858	0.4308	1.2866	--	--	0.1406	0.1875	0.655

UG-41 Weld Failure Path Analysis Summary
Weld strength calculations are not required for external pressure

UW-16 Weld Sizing Summary			
Weld description	**Required weld throat size (in)**	**Actual weld throat size (in)**	**Status**
Nozzle to shell fillet (Leg_{41})	0.25	0.2625	weld size is adequate

N7B (N7B)

ASME Section VIII Division 1, 2010 Edition, A11 Addenda

$t_{w(lower)}$ = 0.625 in

Leg_{41} = 0.375 in

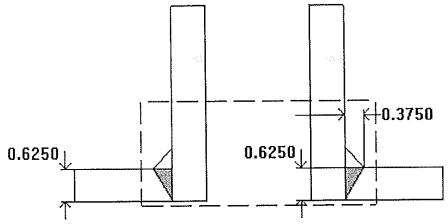

Note: round inside edges per UG-76(c)

Location and Orientation

Located on:	SHELL
Orientation:	135°
Nozzle center line offset to datum line:	19 in
End of nozzle to shell center:	41.625 in
Passes through a Category A joint:	No

Nozzle

Access opening:	No
Material specification:	SA-350 LF2 Cl 1 (II-D p. 18, ln. 10)
Inside diameter, new:	2 in
Nominal wall thickness:	0.655 in
Corrosion allowance:	0.125 in
Projection available outside vessel, Lpr:	7.12 in
Projection available outside vessel to flange face, Lf:	8 in
Local vessel minimum thickness:	0.625 in
Liquid static head included:	5.1438 psi
Longitudinal joint efficiency:	1

ASME B16.5-2009 Flange

Description:	NPS 2 Class 300 LWN A350 LF2 Cl.1
Bolt Material:	SA-193 B7 Bolt <= 2 1/2 (II-D p. 334, ln. 32)
Blind included:	No
Rated MDMT:	-55°F
(Flange impact tested to -50°F UCS-66(i) reduction of 140 °F applied (ratio = 0.2772).)	
(Flange rated MDMT = -155 °F Bolts rated MDMT per Fig UCS-66 note (c) = -55 °F)	
Liquid static head:	5.1077 psi
MAWP rating:	654.6 psi @ 302°F
MAP rating:	740 psi @ 70°F
Hydrotest rating:	1,125 psi @ 70°F
PWHT performed:	No

Reinforcement Calculations for Internal Pressure

UG-37 Area Calculation Summary (in²) For P = 205.14 psi @ 302 °F The opening is adequately reinforced							UG-45 Nozzle Wall Thickness Summary (in) The nozzle passes UG-45	
A required	A available	A_1	A_2	A_3	A_5	A welds	t_{req}	t_{min}
0.7692	1.7924	0.3558	1.296	--	--	0.1406	0.314	0.655

UG-41 Weld Failure Path Analysis Summary
The nozzle is exempt from weld strength calculations per UW-15(b)(1)

UW-16 Weld Sizing Summary			
Weld description	Required weld throat size (in)	Actual weld throat size (in)	Status
Nozzle to shell fillet (Leg_{41})	0.25	0.2625	weld size is adequate

Reinforcement Calculations for External Pressure

UG-37 Area Calculation Summary (in²) For Pe = 15 psi @ 302 °F The opening is adequately reinforced							UG-45 Nozzle Wall Thickness Summary (in) The nozzle passes UG-45	
A required	A available	A_1	A_2	A_3	A_5	A welds	t_{req}	t_{min}
0.3471	1.858	0.4308	1.2866	--	--	0.1406	0.1875	0.655

UG-41 Weld Failure Path Analysis Summary
Weld strength calculations are not required for external pressure

UW-16 Weld Sizing Summary			
Weld description	**Required weld throat size (in)**	**Actual weld throat size (in)**	**Status**
Nozzle to shell fillet (Leg_{41})	0.25	0.2625	weld size is adequate

N8 (N8)

ASME Section VIII Division 1, 2010 Edition, A11 Addenda

$t_{w(lower)}$ = 0.625 in

Leg_{41} = 0.375 in

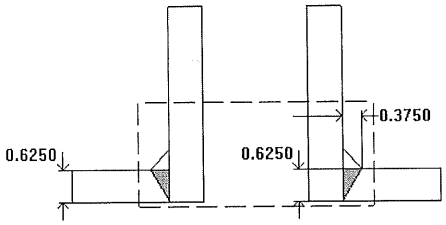

Note: round inside edges per UG-76(c)

Location and Orientation

Located on:	SHELL
Orientation:	60°
Nozzle center line offset to datum line:	84 in
End of nozzle to shell center:	41.625 in
Passes through a Category A joint:	No

Nozzle

Access opening:	No
Material specification:	SA-350 LF2 Cl 1 (II-D p. 18, ln. 10)
Inside diameter, new:	2 in
Nominal wall thickness:	0.655 in
Corrosion allowance:	0.125 in
Projection available outside vessel, Lpr:	7.12 in
Projection available outside vessel to flange face, Lf:	8 in
Local vessel minimum thickness:	0.625 in
Liquid static head included:	2.7975 psi
Longitudinal joint efficiency:	1

ASME B16.5-2009 Flange

Description:	NPS 2 Class 300 LWN A350 LF2 Cl.1
Bolt Material:	SA-193 B7 Bolt <= 2 1/2 (II-D p. 334, ln. 32)
Blind included:	No
Rated MDMT:	-55°F

(Flange impact tested to -50°F
UCS-66(i) reduction of 140 °F applied (ratio = 0.274).)
(Flange rated MDMT = -155 °F
Bolts rated MDMT per Fig UCS-66 note (c) = -55 °F)

Liquid static head:	2.7614 psi
MAWP rating:	654.6 psi @ 302°F
MAP rating:	740 psi @ 70°F
Hydrotest rating:	1,125 psi @ 70°F
PWHT performed:	No

Reinforcement Calculations for Internal Pressure

UG-37 Area Calculation Summary (in^2) For P = 202.8 psi @ 302 °F The opening is adequately reinforced							UG-45 Nozzle Wall Thickness Summary (in) The nozzle passes UG-45	
A required	A available	A_1	A_2	A_3	A_5	A welds	t_{req}	t_{min}
0.7604	1.8015	0.3646	1.2963	--	--	0.1406	0.314	0.655

UG-41 Weld Failure Path Analysis Summary
The nozzle is exempt from weld strength calculations per UW-15(b)(1)

UW-16 Weld Sizing Summary			
Weld description	Required weld throat size (in)	Actual weld throat size (in)	Status
Nozzle to shell fillet (Leg_{41})	0.25	0.2625	weld size is adequate

Reinforcement Calculations for External Pressure

UG-37 Area Calculation Summary (in^2) For Pe = 15 psi @ 302 °F The opening is adequately reinforced							UG-45 Nozzle Wall Thickness Summary (in) The nozzle passes UG-45	
A required	A available	A_1	A_2	A_3	A_5	A welds	t_{req}	t_{min}
0.3471	1.858	0.4308	1.2866	--	--	0.1406	0.1875	0.655

UG-41 Weld Failure Path Analysis Summary
Weld strength calculations are not required for external pressure

UW-16 Weld Sizing Summary			
Weld description	**Required weld throat size (in)**	**Actual weld throat size (in)**	**Status**
Nozzle to shell fillet (Leg_{41})	0.25	0.2625	weld size is adequate

N9 (N9)

ASME Section VIII Division 1, 2010 Edition, A11 Addenda

$t_{w(lower)}$ = 0.625 in

Leg_{41} = 0.375 in

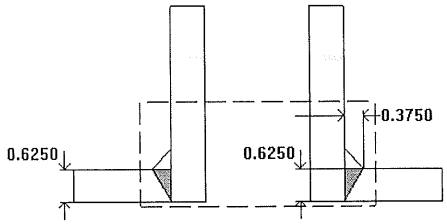

Note: round inside edges per UG-76(c)

Location and Orientation

Located on:	SHELL
Orientation:	120°
Nozzle center line offset to datum line:	84 in
End of nozzle to shell center:	41.625 in
Passes through a Category A joint:	No

Nozzle

Access opening:	No
Material specification:	SA-350 LF2 Cl 1 (II-D p. 18, ln. 10)
Inside diameter, new:	2 in
Nominal wall thickness:	0.655 in
Corrosion allowance:	0.125 in
Projection available outside vessel, Lpr:	7.12 in
Projection available outside vessel to flange face, Lf:	8 in
Local vessel minimum thickness:	0.625 in
Liquid static head included:	2.7975 psi
Longitudinal joint efficiency:	1

ASME B16.5-2009 Flange

Description:	NPS 2 Class 300 LWN A350 LF2 Cl.1
Bolt Material:	SA-193 B7 Bolt <= 2 1/2 (II-D p. 334, ln. 32)
Blind included:	No
Rated MDMT:	-55°F
(Flange impact tested to -50°F UCS-66(i) reduction of 140 °F applied (ratio = 0.274).)	
(Flange rated MDMT = -155 °F Bolts rated MDMT per Fig UCS-66 note (c) = -55 °F)	
Liquid static head:	2.7614 psi
MAWP rating:	654.6 psi @ 302°F
MAP rating:	740 psi @ 70°F
Hydrotest rating:	1,125 psi @ 70°F
PWHT performed:	No

Reinforcement Calculations for Internal Pressure

UG-37 Area Calculation Summary (in²) For P = 202.8 psi @ 302 °F The opening is adequately reinforced							UG-45 Nozzle Wall Thickness Summary (in) The nozzle passes UG-45	
A required	A available	A_1	A_2	A_3	A_5	A welds	t_{req}	t_{min}
0.7604	1.8015	0.3646	1.2963	--	--	0.1406	0.314	0.655

UG-41 Weld Failure Path Analysis Summary
The nozzle is exempt from weld strength calculations per UW-15(b)(1)

UW-16 Weld Sizing Summary			
Weld description	Required weld throat size (in)	Actual weld throat size (in)	Status
Nozzle to shell fillet (Leg_{41})	0.25	0.2625	weld size is adequate

Reinforcement Calculations for External Pressure

UG-37 Area Calculation Summary (in²) For Pe = 15 psi @ 302 °F The opening is adequately reinforced							UG-45 Nozzle Wall Thickness Summary (in) The nozzle passes UG-45	
A required	A available	A_1	A_2	A_3	A_5	A welds	t_{req}	t_{min}
0.3471	1.858	0.4308	1.2866	--	--	0.1406	0.1875	0.655

UG-41 Weld Failure Path Analysis Summary
Weld strength calculations are not required for external pressure

UW-16 Weld Sizing Summary			
Weld description	Required weld throat size (in)	Actual weld throat size (in)	Status
Nozzle to shell fillet (Leg_{41})	0.25	0.2625	weld size is adequate

N10 (N10)

ASME Section VIII Division 1, 2010 Edition, A11 Addenda

$t_{w(lower)}$ = 0.625 in

Leg_{41} = 0.375 in

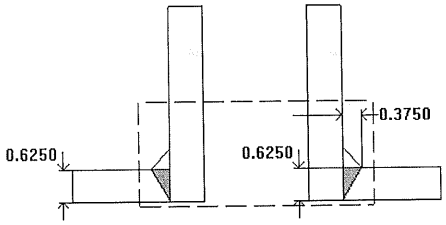

Note: round inside edges per UG-76(c)

Location and Orientation

Located on:	SHELL
Orientation:	90°
Nozzle center line offset to datum line:	29 in
End of nozzle to shell center:	41.625 in
Passes through a Category A joint:	No

Nozzle

Access opening:	No
Material specification:	SA-350 LF2 Cl 1 (II-D p. 18, ln. 10)
Inside diameter, new:	2 in
Nominal wall thickness:	0.655 in
Corrosion allowance:	0.125 in
Projection available outside vessel, Lpr:	7.12 in
Projection available outside vessel to flange face, Lf:	8 in
Local vessel minimum thickness:	0.625 in
Liquid static head included:	4.7829 psi
Longitudinal joint efficiency:	1

ASME B16.5-2009 Flange

Description:	NPS 2 Class 300 LWN A350 LF2 Cl.1
Bolt Material:	SA-193 B7 Bolt <= 2 1/2 (II-D p. 334, ln. 32)
Blind included:	No
Rated MDMT:	-55°F
(Flange impact tested to -50°F UCS-66(i) reduction of 140 °F applied (ratio = 0.2767).)	
(Flange rated MDMT = -155 °F Bolts rated MDMT per Fig UCS-66 note (c) = -55 °F)	
Liquid static head:	4.7468 psi
MAWP rating:	654.6 psi @ 302°F
MAP rating:	740 psi @ 70°F
Hydrotest rating:	1,125 psi @ 70°F
PWHT performed:	No

Reinforcement Calculations for Internal Pressure

UG-37 Area Calculation Summary (in^2) For P = 204.78 psi @ 302 °F The opening is adequately reinforced							UG-45 Nozzle Wall Thickness Summary (in) The nozzle passes UG-45	
A required	A available	A_1	A_2	A_3	A_5	A welds	t_{req}	t_{min}
0.7679	1.7937	0.3571	1.296	--	--	0.1406	0.314	0.655

UG-41 Weld Failure Path Analysis Summary
The nozzle is exempt from weld strength calculations per UW-15(b)(1)

UW-16 Weld Sizing Summary			
Weld description	Required weld throat size (in)	Actual weld throat size (in)	Status
Nozzle to shell fillet (Leg_{41})	0.25	0.2625	weld size is adequate

Reinforcement Calculations for External Pressure

UG-37 Area Calculation Summary (in^2) For Pe = 15 psi @ 302 °F The opening is adequately reinforced							UG-45 Nozzle Wall Thickness Summary (in) The nozzle passes UG-45	
A required	A available	A_1	A_2	A_3	A_5	A welds	t_{req}	t_{min}
0.3471	1.858	0.4308	1.2866	--	--	0.1406	0.1875	0.655

UG-41 Weld Failure Path Analysis Summary
Weld strength calculations are not required for external pressure

UW-16 Weld Sizing Summary			
Weld description	**Required weld throat size (in)**	**Actual weld throat size (in)**	**Status**
Nozzle to shell fillet (Leg_{41})	0.25	0.2625	weld size is adequate

N11 (N11)

ASME Section VIII Division 1, 2010 Edition, A11 Addenda

$t_{w(lower)}$ = 0.625 in

Leg_{41} = 0.375 in

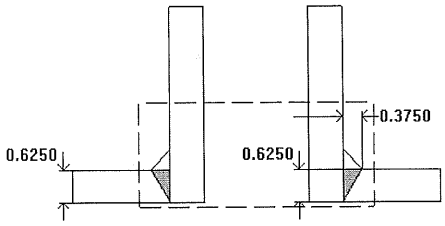

Note: round inside edges per UG-76(c)

Location and Orientation

Located on:	SHELL
Orientation:	90°
Nozzle center line offset to datum line:	19 in
End of nozzle to shell center:	41.625 in
Passes through a Category A joint:	No

Nozzle

Access opening:	No
Material specification:	SA-350 LF2 Cl 1 (II-D p. 18, ln. 10)
Inside diameter, new:	2 in
Nominal wall thickness:	0.655 in
Corrosion allowance:	0.125 in
Projection available outside vessel, Lpr:	7.12 in
Projection available outside vessel to flange face, Lf:	8 in
Local vessel minimum thickness:	0.625 in
Liquid static head included:	5.1438 psi
Longitudinal joint efficiency:	1

ASME B16.5-2009 Flange

Description:	NPS 2 Class 300 LWN A350 LF2 Cl.1
Bolt Material:	SA-193 B7 Bolt <= 2 1/2 (II-D p. 334, ln. 32)
Blind included:	Yes
Rated MDMT:	-55°F

(Flange impact tested to -50°F
UCS-66(i) reduction of 140 °F applied (ratio = 0.2772).)
(Flange rated MDMT = -155 °F
Bolts rated MDMT per Fig UCS-66 note (c) = -55 °F)

Liquid static head:	5.1077 psi
MAWP rating:	654.6 psi @ 302°F
MAP rating:	740 psi @ 70°F
Hydrotest rating:	1,125 psi @ 70°F
PWHT performed:	No

Reinforcement Calculations for Internal Pressure

UG-37 Area Calculation Summary (in^2) For P = 205.14 psi @ 302 °F The opening is adequately reinforced							UG-45 Nozzle Wall Thickness Summary (in) The nozzle passes UG-45	
A required	A available	A_1	A_2	A_3	A_5	A welds	t_{req}	t_{min}
0.7692	1.7924	0.3558	1.296	--	--	0.1406	0.314	0.655

UG-41 Weld Failure Path Analysis Summary
The nozzle is exempt from weld strength calculations per UW-15(b)(1)

UW-16 Weld Sizing Summary			
Weld description	Required weld throat size (in)	Actual weld throat size (in)	Status
Nozzle to shell fillet (Leg_{41})	0.25	0.2625	weld size is adequate

Reinforcement Calculations for External Pressure

UG-37 Area Calculation Summary (in^2) For Pe = 15 psi @ 302 °F The opening is adequately reinforced							UG-45 Nozzle Wall Thickness Summary (in) The nozzle passes UG-45	
A required	A available	A_1	A_2	A_3	A_5	A welds	t_{req}	t_{min}
0.3471	1.858	0.4308	1.2866	--	--	0.1406	0.1875	0.655

UG-41 Weld Failure Path Analysis Summary
Weld strength calculations are not required for external pressure

UW-16 Weld Sizing Summary			
Weld description	Required weld throat size (in)	Actual weld throat size (in)	Status
Nozzle to shell fillet (Leg_{41})	0.25	0.2625	weld size is adequate

N12A (N12A)

ASME Section VIII Division 1, 2010 Edition, A11 Addenda

$t_{w(lower)}$ = 0.625 in

Leg_{41} = 0.375 in

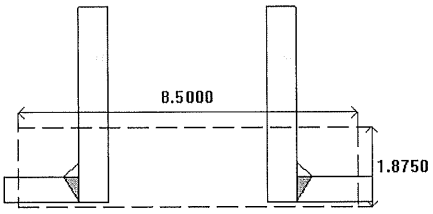

Note: round inside edges per UG-76(c)

Location and Orientation

Located on:	SHELL
Orientation:	90°
Nozzle center line offset to datum line:	8 in
End of nozzle to shell center:	41.039 in
Offset from center, Lo:	9 in
Passes through a Category A joint:	No

Nozzle

Access opening:	No
Material specification:	SA-350 LF2 Cl 1 (II-D p. 18, ln. 10)
Inside diameter, new:	4 in
Nominal wall thickness:	0.75 in
Corrosion allowance:	0.125 in
Opening chord length:	4.4151 in
Projection available outside vessel, Lpr:	7.06 in
Projection available outside vessel to flange face, Lf:	8 in
Local vessel minimum thickness:	0.625 in
Liquid static head included:	5.577 psi
Longitudinal joint efficiency:	1

ASME B16.5-2009 Flange

Description:	NPS 4 Class 150 LWN A350 LF2 Cl.1
Bolt Material:	SA-193 B7 Bolt <= 2 1/2 (II-D p. 334, ln. 32)
Blind included:	No
Rated MDMT:	-55°F
(Flange impact tested to -50°F UCS-66(i) reduction of 27.9 °F applied (ratio = 0.7211).)	
(Flange rated MDMT = -77.9 °F Bolts rated MDMT per Fig UCS-66 note (c) = -55 °F)	
Liquid static head:	5.5048 psi
MAWP rating:	229.4 psi @ 302°F
MAP rating:	285 psi @ 70°F
Hydrotest rating:	450 psi @ 70°F
PWHT performed:	No

Reinforcement Calculations for Internal Pressure

UG-37 Area Calculation Summary (in^2) For P = 205.58 psi @ 302 °F The opening is adequately reinforced							UG-45 Nozzle Wall Thickness Summary (in) The nozzle passes UG-45	
A required	A available	A_1	A_2	A_3	A_5	A welds	t_{req}	t_{min}
0.7563	3.0993	1.4512	1.5075	--	--	0.1406	0.3508	0.75

UG-41 Weld Failure Path Analysis Summary
The nozzle is exempt from weld strength calculations per UW-15(b)(1)

UW-16 Weld Sizing Summary			
Weld description	Required weld throat size (in)	Actual weld throat size (in)	Status
Nozzle to shell fillet (Leg_{41})	0.25	0.2625	weld size is adequate

Reinforcement check in the plane parallel to the longitudinal axis

Reinforcement Calculations for Internal Pressure

UG-37 Area Calculation Summary (in^2) For P = 205.58 psi @ 302 °F The opening is adequately reinforced	UG-45 Nozzle Wall Thickness Summary (in) The nozzle passes UG-45

A required	A available	A_1	A_2	A_3	A_5	A welds	t_{req}	t_{min}
1.4561	2.317	0.6689	1.5075	--	--	0.1406	0.3508	0.75

UG-41 Weld Failure Path Analysis Summary
The nozzle is exempt from weld strength calculations per UW-15(b)(1)

UW-16 Weld Sizing Summary			
Weld description	Required weld throat size (in)	Actual weld throat size (in)	Status
Nozzle to shell fillet (Leg_{41})	0.25	0.2625	weld size is adequate

Reinforcement Calculations for External Pressure

UG-37 Area Calculation Summary (in^2) For Pe = 15 psi @ 302 °F The opening is adequately reinforced							UG-45 Nozzle Wall Thickness Summary (in) The nozzle passes UG-45	
A required	A available	A_1	A_2	A_3	A_5	A welds	t_{req}	t_{min}
0.6811	2.4928	0.8454	1.5068	--	--	0.1406	0.1875	0.75

UG-41 Weld Failure Path Analysis Summary
Weld strength calculations are not required for external pressure

UW-16 Weld Sizing Summary			
Weld description	Required weld throat size (in)	Actual weld throat size (in)	Status
Nozzle to shell fillet (Leg_{41})	0.25	0.2625	weld size is adequate

N12B (N12B)

ASME Section VIII Division 1, 2010 Edition, A11 Addenda

$t_{w(lower)}$ = 0.625 in

Leg_{41} = 0.375 in

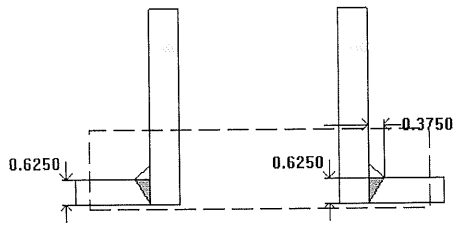

Note: round inside edges per UG-76(c)

Location and Orientation

Located on:	SHELL
Orientation:	90°
Nozzle center line offset to datum line:	8 in
End of nozzle to shell center:	41.039 in
Offset from center, Lo:	-9 in
Passes through a Category A joint:	No

Nozzle

Access opening:	No
Material specification:	SA-350 LF2 Cl 1 (II-D p. 18, ln. 10)
Inside diameter, new:	4 in
Nominal wall thickness:	0.75 in
Corrosion allowance:	0.125 in
Opening chord length:	4.4151 in
Projection available outside vessel, Lpr:	7.06 in
Projection available outside vessel to flange face, Lf:	8 in
Local vessel minimum thickness:	0.625 in
Liquid static head included:	5.577 psi
Longitudinal joint efficiency:	1

ASME B16.5-2009 Flange

Description:	NPS 4 Class 150 LWN A350 LF2 Cl.1
Bolt Material:	SA-193 B7 Bolt <= 2 1/2 (II-D p. 334, ln. 32)
Blind included:	No
Rated MDMT:	-55°F

(Flange impact tested to -50°F
UCS-66(i) reduction of 27.9 °F applied (ratio = 0.7211).)
(Flange rated MDMT = -77.9 °F
Bolts rated MDMT per Fig UCS-66 note (c) = -55 °F)

Liquid static head:	5.5048 psi
MAWP rating:	229.4 psi @ 302°F
MAP rating:	285 psi @ 70°F
Hydrotest rating:	450 psi @ 70°F
PWHT performed:	No

Reinforcement Calculations for Internal Pressure

UG-37 Area Calculation Summary (in^2) For P = 205.58 psi @ 302 °F The opening is adequately reinforced							UG-45 Nozzle Wall Thickness Summary (in) The nozzle passes UG-45	
A required	A available	A_1	A_2	A_3	A_5	A welds	t_{req}	t_{min}
0.7563	3.0993	1.4512	1.5075	--	--	0.1406	0.3508	0.75

UG-41 Weld Failure Path Analysis Summary
The nozzle is exempt from weld strength calculations per UW-15(b)(1)

UW-16 Weld Sizing Summary			
Weld description	Required weld throat size (in)	Actual weld throat size (in)	Status
Nozzle to shell fillet (Leg_{41})	0.25	0.2625	weld size is adequate

Reinforcement check in the plane parallel to the longitudinal axis

Reinforcement Calculations for Internal Pressure

UG-37 Area Calculation Summary (in^2) For P = 205.58 psi @ 302 °F The opening is adequately reinforced	UG-45 Nozzle Wall Thickness Summary (in) The nozzle passes UG-45

A required	A available	A_1	A_2	A_3	A_5	A welds	t_{req}	t_{min}
1.4561	2.317	0.6689	1.5075	--	--	0.1406	0.3508	0.75

UG-41 Weld Failure Path Analysis Summary
The nozzle is exempt from weld strength calculations per UW-15(b)(1)

UW-16 Weld Sizing Summary			
Weld description	Required weld throat size (in)	Actual weld throat size (in)	Status
Nozzle to shell fillet (Leg_{41})	0.25	0.2625	weld size is adequate

Reinforcement Calculations for External Pressure

UG-37 Area Calculation Summary (in^2) For Pe = 15 psi @ 302 °F The opening is adequately reinforced							UG-45 Nozzle Wall Thickness Summary (in) The nozzle passes UG-45	
A required	A available	A_1	A_2	A_3	A_5	A welds	t_{req}	t_{min}
0.6811	2.4928	0.8454	1.5068	--	--	0.1406	0.1875	0.75

UG-41 Weld Failure Path Analysis Summary
Weld strength calculations are not required for external pressure

UW-16 Weld Sizing Summary			
Weld description	Required weld throat size (in)	Actual weld throat size (in)	Status
Nozzle to shell fillet (Leg_{41})	0.25	0.2625	weld size is adequate

N13 (N13)

ASME Section VIII Division 1, 2010 Edition, A11 Addenda

$t_{w(lower)}$ = 0.625 in

Leg_{41} = 0.375 in

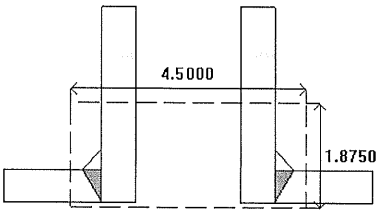

Note: round inside edges per UG-76(c)

Location and Orientation

Located on:	SHELL
Orientation:	60°
Nozzle center line offset to datum line:	136 in
End of nozzle to shell center:	41.625 in
Passes through a Category A joint:	No

Nozzle

Access opening:	No
Material specification:	SA-350 LF2 Cl 1 (II-D p. 18, ln. 10)
Inside diameter, new:	2 in
Nominal wall thickness:	0.655 in
Corrosion allowance:	0.125 in
Projection available outside vessel, Lpr:	7.12 in
Projection available outside vessel to flange face, Lf:	8 in
Local vessel minimum thickness:	0.625 in
Liquid static head included:	0.9205 psi
Longitudinal joint efficiency:	1

ASME B16.5-2009 Flange

Description:	NPS 2 Class 300 LWN A350 LF2 Cl.1
Bolt Material:	SA-193 B7 Bolt <= 2 1/2 (II-D p. 334, ln. 32)
Blind included:	No
Rated MDMT:	-55°F
(Flange impact tested to -50°F UCS-66(i) reduction of 140 °F applied (ratio = 0.2715).)	
(Flange rated MDMT = -155 °F Bolts rated MDMT per Fig UCS-66 note (c) = -55 °F)	
Liquid static head:	0.8844 psi
MAWP rating:	654.6 psi @ 302°F
MAP rating:	740 psi @ 70°F
Hydrotest rating:	1,125 psi @ 70°F
PWHT performed:	No

Reinforcement Calculations for Internal Pressure

UG-37 Area Calculation Summary (in²) For P = 200.92 psi @ 302 °F The opening is adequately reinforced							UG-45 Nozzle Wall Thickness Summary (in) The nozzle passes UG-45	
A required	A available	A_1	A_2	A_3	A_5	A welds	t_{req}	t_{min}
0.7533	1.8088	0.3717	1.2965	--	--	0.1406	0.314	0.655

UG-41 Weld Failure Path Analysis Summary
The nozzle is exempt from weld strength calculations per UW-15(b)(1)

UW-16 Weld Sizing Summary			
Weld description	Required weld throat size (in)	Actual weld throat size (in)	Status
Nozzle to shell fillet (Leg_{41})	0.25	0.2625	weld size is adequate

Reinforcement Calculations for External Pressure

UG-37 Area Calculation Summary (in²) For Pe = 15 psi @ 302 °F The opening is adequately reinforced							UG-45 Nozzle Wall Thickness Summary (in) The nozzle passes UG-45	
A required	A available	A_1	A_2	A_3	A_5	A welds	t_{req}	t_{min}
0.3471	1.858	0.4308	1.2866	--	--	0.1406	0.1875	0.655

UG-41 Weld Failure Path Analysis Summary
Weld strength calculations are not required for external pressure

UW-16 Weld Sizing Summary			
Weld description	Required weld throat size (in)	Actual weld throat size (in)	Status
Nozzle to shell fillet (Leg_{41})	0.25	0.2625	weld size is adequate

LIFT LUG # 1

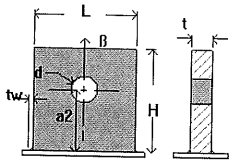

Minimum report

Geometry Inputs

Attached To	HEAD # 1
Material	SA-516-70N
Orientation	Longitudinal
Distance of Lift Point From Datum	164"
Angular Position	0.00°
Length of Lug, L	10"
Height of Lug, H	10"
Thickness of Lug, t	1"
Hole Diameter, d	2.5"
Pin Diameter, Dp	2.375"
Load Eccentricity, a_1	0"
Distance from Load to Shell or Pad, a_2	6"
Weld Size, t_w	0.375"
Load Angle Normal to Vessel, β	0.0000 °
Load Angle from Vertical, ϕ	-24.9466 °

Intermediate Values

Load Factor	1.5000
Vessel Weight (new, incl. Load Factor), W	17384 lb
Lug Weight (new), W_{lug}	27 lb
Allowable Stress, Tensile, σ_t	22800 psi
Allowable Stress, Shear, σ_s	15200 psi
Allowable Stress, Bearing, σ_p	34200 psi
Allowable Stress, Bending, σ_b	25080 psi
Allowable Stress, Weld Shear, $\tau_{allowable}$	15200 psi
Allowable Stress set to 1/3 Sy per ASME B30.20	No

Summary Values

Required Lift Pin Diameter, d_{reqd}	0.6501"
Required Lug Thickness, t_{reqd}	0.1242"
Lug Stress Ratio, σ_{ratio}	0.04
Weld Shear Stress Ratio, τ_{ratio}	0.11
Lug Design	Acceptable
Local Stresses	Acceptable

C2 Piping Flexibility / Stress (Including Locations of Piping Anchor / Guide Points)

2303-8th Street, Nisku Alberta, T9E-7Z3 CANADA

Section not available

2303-8th Street, Nisku Alberta, T9E-7Z3 CANADA

C7 PSV Sizing Basis and Calculations (Incl. Rupture disks if applicable)

2303-8th Street, Nisku Alberta, T9E-7Z3 CANADA

GE Oil & Gas

Consolidated Valves

Sizing and Selection Report

Quote No.:	5Blue Process Equipment	RFQ No.:	
Rev. No.:	0	Customer PO:	
Prepared by:	Patrick Socha	Serial No.:	
Checked by:		Sizing Rev. No.	0
Spec. Sheet No.:			

Customer Information

Name:

Project:

End User:

Item Number: 3

6Q8

Tag No.:		002-PSV-01-1610E				
P&ID Number - Location		- Cardium Separator				
Valve Type		1905-30QC-2-CC-MS-31-RF-GS-HP				
Gag Required		NO				
Inlet Connection						
Specified				Flg	150#	Rf
Selected		6	in	Flg	150#	Rf
Outlet Connection						
Specified				Flg	150#	Rf
Selected		8	in	Flg	150#	Rf
Sizing Data						
Design Code		ASME Section VIII				
Sizing Basis		Single Fluid - Required Area				
Fluid		GAS/CONDENSATE				
Fluid State		Gas / Vapour				
M		22.1				
Z		0.98				
k		1				
C		315				
Kd (vapor)	Kd (liquid)	0.855				
Kb	Kw	0.501				
Ksh	Kn					
G	Density @ P1					
Viscosity	Kv					
Overpressure	Accumulation	10 %			10 %	
Kc		1				
Pressure						
Operating	Set	116			200	Psi (g)
MAWP	CDTP	200			200	Psi (g)
Flowing		233				Psi (a)
Superimposed Minimum		20				Psi (g)
Superimposed Maximum		20				Psi (g)
Builtup	Total BP	100			120	Psi (g)
Barometric		13				Psi (a)
TEMPERATURE						
Operating		53 Deg. C				
Relieving		53 Deg. C				
Design		53 Deg. C				
Flow Area						
Required		11.865 in2				
Selected	Designation	12.85 in2			Q	
Standard		ASME Certified				
Capacity						
Required						
Selected		35869.8 Kg/Hr				
Nameplate		47329 SCFM				
Reaction Force		167 lbf				
Noise Level		123 DBa @ 1 M				

Notes

Sizing Basis:
Blocked Outlet Flow

Summataion method:
PSV sized per required area:
Areq = 002-PSV-01-1610E (G1 + L1)
Areq = (11.862 + 0.0037) in2
Areq = 11.865 in2

Required Capacity not calculated:
- Selected capacity is the max relieving capacity for this 'Q' size orifice (12.85 in2)

Process contained <1% liquid. Therefore sized as gas service PSV.

GE Oil & Gas

Consolidated Valves

Dimensional Drawing and Bill of Material

Tag Number	002-PSV-01-1610E								
Valve Type	1905-30QC-2-CC-MS-31-RF-GS-HP								
P&ID No - Location	- Cardium Separator					Item Number:	3	Client	
Spec Sheet Number						Rev. Number	0	RFQ No.:	
Inlet	6	in	Flg	150#	Rf	Area	12.85 in2	Project:	
Outlet	8	in	Flg	150#	Rf	Set pressure	200 Psi (g)	P.O. No.	

Certified by GE Oil & Gas

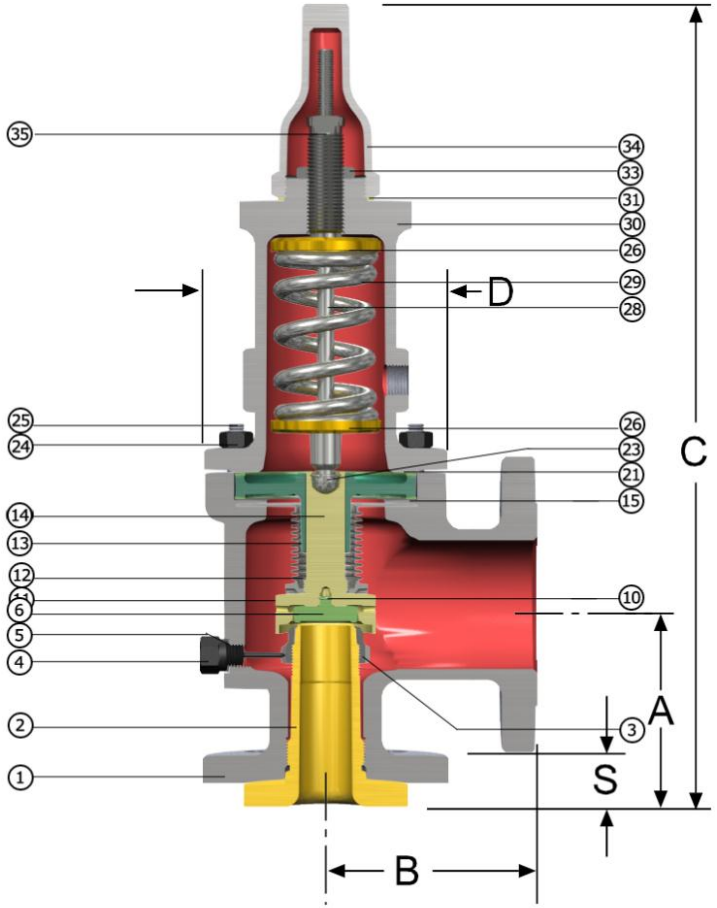

DIMENSIONS & WEIGHT

A:239.7 mm -- 9-7/16 in
B:241.3 mm -- 9-1/2 in
C:1041.4 mm -- 41in
D:346.1 mm -- 13-5/8 in
S:46 mm -- 1-13/16 in
WEIGHT:195 kg -- 430 lb

Valve picture is for reference only and is not to scale.

BILL OF MATERIALS

PARTNAME	MATERIAL
1) BASE	ASME SA216 WCC CARBON STEEL
2) NOZZLE	316 STAINLESS STEEL
3) ADJUSTING RING	316 STAINLESS STEEL
4) ADJUSTING RING PIN	316 STAINLESS STEEL
5) ADJ. RING PIN GASKET	SOFT IRON
6) DISC	316 STAINLESS STEEL
10) DISC RETAINER	INCONEL X-750
11) BELLOWS GASKET	SOFT IRON
12) BELLOWS ASSEMBLY	
BELLOWS NUT	316L STAINLESS STEEL
BELLOWS FLANGE	316L STAINLESS STEEL
BELLOWS	INCONEL 625 LCF
13) GUIDE (BELLOWS)	316 STAINLESS STEEL
14) DISC HOLDER	316 STAINLESS STEEL
15) GUIDE GASKET	SOFT IRON
21) BONNET GASKET (BELLOWS)	SOFT IRON
23) SPINDLE RETAINER	INCONEL X-750
24) STUD NUTS	ASME SA194 2H CARBON STEEL
25) BASE STUDS	ASME SA193 B7 ALLOY STEEL
26) SPRING WASHER (BELLOWS)	CARBON STEEL
28) SPINDLE (BELLOWS)	400 SERIES STAINLESS STEEL
29) SPRING	ALLOY STEEL (0647CR)
30) BONNET	ASME SA216 WCC CARBON STEEL
31) CAP GASKET	SOFT IRON
33) ADJUSTING SCREW NUT (BELLOWS)	416 STAINLESS STEEL
34) CAP	CARBON STEEL
35) ADJUSTING SCREW (BELLOWS)	416 STAINLESS STEEL
NOT SHOWN	
BASE PLUG	CARBON STEEL

GE Oil & Gas

Consolidated Valves

Calculation Sheet

Tag Number	002-PSV-01-1610E	Client	
Item Number:	3	Prepared by:	Patrick Socha
RFQ No.:		End User Location:	
Project:			
Valve Type	1905-30QC-2-CC-MS-31-RF-GS-HP		
Gag Required	NO		

Equation Used To Size Consolidated Safety Relief Valves

$$A_c = \frac{W\sqrt{T}\sqrt{Z}}{C\,K_d\,P_1\sqrt{M}\,K_b\,K_c\,K_u}$$

$$12.85 = \frac{35869.8 * \text{sqrt}(326 * 0.98)}{315 * 0.855 * 233 * \text{sqrt}(22.1) * 0.501 * 1 * 0.33792076}$$

A = 12.85 in2

Vapors or Gases - Mass Flow Rate sizing

(W = Kg/Hr) Fluid Name - GAS/CONDENSATE

GE Oil & Gas

Consolidated Valves

Sizing and Selection Report

Quote No.:	5Blue Process Equipment	RFQ No.:	
Rev. No.:	0	Customer PO:	
Prepared by:	Patrick Socha	Serial No.:	
Checked by:		Sizing Rev. No.	0
Spec. Sheet No.:			

Customer Information

Name:

Project:

End User:

Item Number: 3.a

6Q8

Tag No.:		002-PSV-01-1610E (G1)				
P&ID Number - Location		-				
Valve Type		1905-30QC-2-CC-MS-31-RF-GS-HP				
Gag Required		NO				
Inlet Connection						
Specified				Flg	150#	Rf
Selected		6	in	Flg	150#	Rf
Outlet Connection						
Specified				Flg	150#	Rf
Selected		8	in	Flg	150#	Rf
Sizing Data						
Design Code		ASME Section VIII				
Sizing Basis		Single Fluid - Required Capacity				
Fluid		GAS/CONDENSATE				
Fluid State		Gas / Vapour				
M		22.1				
Z		0.98				
k		1				
C		315				
Kd (vapor)	Kd (liquid)	0.855				
Kb	Kw	0.834				
Ksh	Kn					
G	Density @ P1					
Viscosity	Kv					
Overpressure	Accumulation	10 %			10 %	
Kc		1				
Pressure						
Operating	Set	116			200	Psi (g)
MAWP	CDTP	200			200	Psi (g)
Flowing		233				Psi (a)
Superimposed Minimum		20				Psi (g)
Superimposed Maximum		20				Psi (g)
Builtup	Total BP	80			100	Psi (g)
Barometric		13				Psi (a)
TEMPERATURE						
Operating		53 Deg. C				
Relieving		53 Deg. C				
Design		53 Deg. C				
Flow Area						
Required		11.8615 in2				
Selected	Designation	12.85 in2			Q	
Standard		ASME Certified				
Capacity						
Required		55140 Kg/Hr				
Selected		59735.22 Kg/Hr				
Nameplate		47329 SCFM				
Reaction Force		524 lbf				
Noise Level		131 DBa @ 1 M				

Notes

Sizing Basis:
Blocked Outlet Flow

002-PSV-01-1610E (G1) - sized per gas properties.

Area requred (G1) = 11.8615 in2

GE Oil & Gas

Consolidated Valves

Dimensional Drawing and Bill of Material

Tag Number	002-PSV-01-1610E (G1)								
Valve Type	1905-30QC-2-CC-MS-31-RF-GS-HP								
P&ID No - Location	-					Item Number:	3.a	Client	
Spec Sheet Number						Rev. Number	0	RFQ No.:	
Inlet	6	in	Flg	150#	Rf	Area	12.85 in2	Project:	
Outlet	8	in	Flg	150#	Rf	Set pressure	200 Psi (g)	P.O. No.	

Certified by GE Oil & Gas

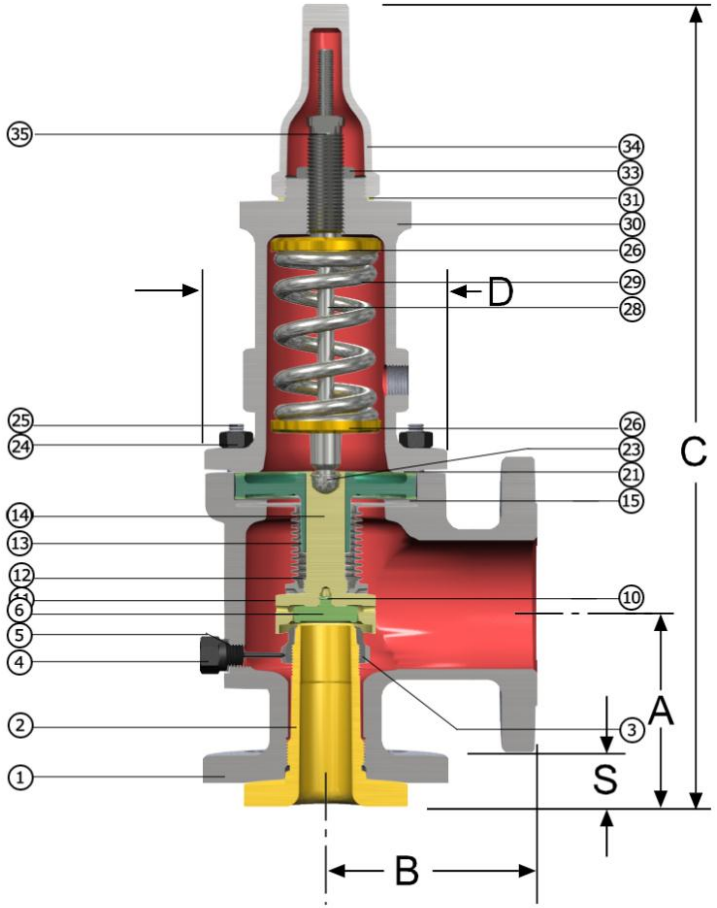

DIMENSIONS & WEIGHT

A:239.7 mm -- 9-7/16 in
B:241.3 mm -- 9-1/2 in
C:1041.4 mm -- 41in
D:346.1 mm -- 13-5/8 in
S:46 mm -- 1-13/16 in
WEIGHT:195 kg -- 430 lb

Valve picture is for reference only and is not to scale.

BILL OF MATERIALS

PARTNAME	MATERIAL
1) BASE	ASME SA216 WCC CARBON STEEL
2) NOZZLE	316 STAINLESS STEEL
3) ADJUSTING RING	316 STAINLESS STEEL
4) ADJUSTING RING PIN	316 STAINLESS STEEL
5) ADJ. RING PIN GASKET	SOFT IRON
6) DISC	316 STAINLESS STEEL
10) DISC RETAINER	INCONEL X-750
11) BELLOWS GASKET	SOFT IRON
12) BELLOWS ASSEMBLY	
BELLOWS NUT	316L STAINLESS STEEL
BELLOWS FLANGE	316L STAINLESS STEEL
BELLOWS	INCONEL 625 LCF
13) GUIDE (BELLOWS)	316 STAINLESS STEEL
14) DISC HOLDER	316 STAINLESS STEEL
15) GUIDE GASKET	SOFT IRON
21) BONNET GASKET (BELLOWS)	SOFT IRON
23) SPINDLE RETAINER	INCONEL X-750
24) STUD NUTS	ASME SA194 2H CARBON STEEL
25) BASE STUDS	ASME SA193 B7 ALLOY STEEL
26) SPRING WASHER (BELLOWS)	CARBON STEEL
28) SPINDLE (BELLOWS)	400 SERIES STAINLESS STEEL
29) SPRING	ALLOY STEEL (0647CR)
30) BONNET	ASME SA216 WCC CARBON STEEL
31) CAP GASKET	SOFT IRON
33) ADJUSTING SCREW NUT (BELLOWS)	416 STAINLESS STEEL
34) CAP	CARBON STEEL
35) ADJUSTING SCREW (BELLOWS)	416 STAINLESS STEEL
NOT SHOWN	
BASE PLUG	CARBON STEEL

GE Oil & Gas

Consolidated Valves

Calculation Sheet

Tag Number	002-PSV-01-1610E (G1)	Client	
Item Number:	3.a	Prepared by:	Patrick Socha
RFQ No.:		End User Location:	
Project:			
Valve Type	1905-30QC-2-CC-MS-31-RF-GS-HP		
Gag Required	NO		

Equation Used To Size Consolidated Safety Relief Valves

$$A_c = \frac{W\sqrt{T}\sqrt{Z}}{C\,K_d\,P_1\sqrt{M}\,K_b\,K_c\,K_u}$$

$$11.8615 = \frac{55140 * \text{sqrt}(326 * 0.98)}{315 * 0.855 * 233 * \text{sqrt}(22.1) * 0.834 * 1 * 0.33792076}$$

A = 12.85 in2

Vapors or Gases - Mass Flow Rate sizing

(W = Kg/Hr) Fluid Name - GAS/CONDENSATE

GE Oil & Gas

Consolidated Valves

Sizing and Selection Report

Quote No.:	5Blue Process Equipment	RFQ No.:	
Rev. No.:	0	Customer PO:	
Prepared by:	Patrick Socha	Serial No.:	
Checked by:		Sizing Rev. No.	0
Spec. Sheet No.:			

Customer Information

Name:

Project:

End User:

Item Number: 3.b

1D2

Tag No.:		002-PSV-01-1610E (L1)				
P&ID Number - Location		-				
Valve Type		1905-30DC-2-CC-MS-31-RF-LA				
Gag Required		NO				
Inlet Connection						
Specified				Flg	150#	Rf
Selected		1	in	Flg	150#	Rf
Outlet Connection						
Specified				Flg	150#	Rf
Selected		2	in	Flg	150#	Rf
Sizing Data						
Design Code		API				
Sizing Basis		Single Fluid - Required Capacity				
Fluid		CONDENSATE				
Fluid State		Liquid				
M						
Z						
k						
C						
Kd (vapor)	Kd (liquid)			0.744		
Kb	Kw			0.666		
Ksh	Kn					
G	Density @ P1	0.6142				
Viscosity	Kv	0.898	cP	0.942		
Overpressure	Accumulation	20.68 KPa (g)		20.68 KPa (g)		
Kc		1				
Pressure						
Operating	Set	116		200 KPa (g)		
MAWP	CDTP	200		200 KPa (g)		
Flowing		233.684		KPa (a)		
Superimposed Minimum		20		KPa (g)		
Superimposed Maximum		20		KPa (g)		
Builtup	Total BP	80		100 KPa (g)		
Barometric		13		KPa (a)		
TEMPERATURE						
Operating		53 Deg. C				
Relieving		53 Deg. C				
Design		53 Deg. C				
Flow Area						
Required		0.0037 in2				
Selected	Designation	0.11 in2		D		
Standard		API				
Capacity						
Required		1.32 LPM				
Selected		39.44 LPM				
Nameplate		51 LPM				
Reaction Force						
Noise Level		90 DBa @ 0				

Notes

Sizing Basis:
Blocked Outlet Flow

002-PSV-01-1610E (L1) - sized per liquid (Condensate) properties.

Area requred (L1) = 0.0037 in2

GE Oil & Gas

Consolidated Valves

Dimensional Drawing and Bill of Material

Tag Number	002-PSV-01-1610E (L1)								
Valve Type	1905-30DC-2-CC-MS-31-RF-LA								
P&ID No - Location	-					Item Number:	3.b	Client	
Spec Sheet Number						Rev. Number	0	RFQ No.:	
Inlet	1	in	Flg	150#	Rf	Area	0.11 in2	Project:	
Outlet	2	in	Flg	150#	Rf	Set pressure	200 KPa (g)	P.O. No.	

Certified by GE Oil & Gas

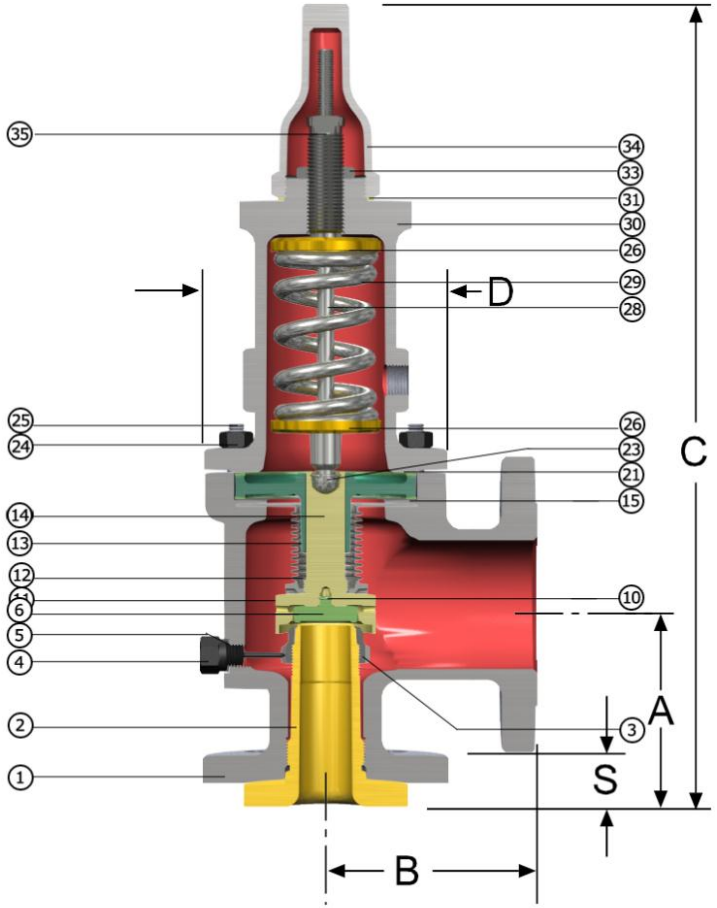

DIMENSIONS & WEIGHT

A:104.8 mm -- 4-1/8 in
B:114.3 mm -- 4-1/2 in
C:457.2 mm -- 18 in
D:138.1 mm -- 5-7/16 in
S:28.6 mm -- 1-1/8 in
WEIGHT:18.1 kg - 40 lb

Valve picture is for reference only and is not to scale.

BILL OF MATERIALS

PARTNAME	MATERIAL
1) BASE	ASME SA216 WCC CARBON STEEL
2) NOZZLE	316 STAINLESS STEEL
3) ADJUSTING RING	316 STAINLESS STEEL
4) ADJUSTING RING PIN	316 STAINLESS STEEL
5) ADJ. RING PIN GASKET	SOFT IRON
6) DISC	316 STAINLESS STEEL
10) DISC RETAINER	INCONEL X-750
11) BELLOWS GASKET	SOFT IRON
12) BELLOWS ASSEMBLY	
BELLOWS NUT	316L STAINLESS STEEL
BELLOWS FLANGE	316L STAINLESS STEEL
BELLOWS	INCONEL 625 LCF
13) GUIDE (BELLOWS)	316 STAINLESS STEEL
14) DISC HOLDER	316 STAINLESS STEEL
15) GUIDE GASKET	SOFT IRON
21) BONNET GASKET (BELLOWS)	SOFT IRON
23) SPINDLE RETAINER	INCONEL X-750
24) STUD NUTS	ASME SA194 2H CARBON STEEL
25) BASE STUDS	ASME SA193 B7 ALLOY STEEL
26) SPRING WASHER (BELLOWS)	CARBON STEEL
28) SPINDLE (BELLOWS)	400 SERIES STAINLESS STEEL
29) SPRING	ALLOY STEEL (013CR)
30) BONNET	ASME SA216 WCC CARBON STEEL
31) CAP GASKET	SOFT IRON
33) ADJUSTING SCREW NUT (BELLOWS)	416 STAINLESS STEEL
34) CAP	CARBON STEEL
35) ADJUSTING SCREW (BELLOWS)	416 STAINLESS STEEL
NOT SHOWN	
BASE PLUG	CARBON STEEL
LIMIT WASHER	316 STAINLESS STEEL

GE Oil & Gas

Consolidated Valves

Calculation Sheet

Tag Number	002-PSV-01-1610E (L1)	Client	
Item Number:	3.b	Prepared by:	Patrick Socha
RFQ No.:		End User Location:	
Project:			
Valve Type	1905-30DC-2-CC-MS-31-RF-LA		
Gag Required	NO		

Equation Used To Size Consolidated Safety Relief Valves

$$A_c = \frac{Q\sqrt{G}}{38 K_d \sqrt{P_1 - P_2} K_v K_w K_c K_u}$$

$$0.0037 = \frac{1.32 * \text{sqrt}(0.6142)}{38 * 0.744 * \text{sqrt}(233.6843 - 113) * 0.942 * 0.666 * 1 * 1.44164044}$$

A = 0.11 in2

Liquid - Certified Volumetric Flow Rate sizing - CONDENSATE

This applies only to liquid trim designs.



C8 Control Valve Sizing

2303-8th Street, Nisku Alberta, T9E-7Z3 CANADA

Valve Sizing Calculation

Customer:		Spartan Controls Ltd	
Fax:		Phone:	
Contact:		Contact:	Eric Kaert
Item:	1 Qty: 1	PO Number:	
Tags:	002-LCV/LYI-01-1610	Project:	5B1108
Description:	2 Inch D-DVC6200	P&ID Number:	5B1108-02-DR-00-001
Service Description:	CARDIUM GAS SEP COND. OUT	Line Number:	60-PL-A11-01310

Sizing Type: Liquid | Flow is Turbulent | Solving for: Cv | Noise is None | Flow is Mass

Variable Name	Units	Minimum	Normal	Maximum	
Liquid					
Specific Gravity (SG)		0.610	0.610	0.610	
Inlet Pressure (P1)	kPa(g)	600.000	700.000	700.000	
Outlet Pressure (P2)	kPa(g)	550.000	550.000	550.000	
Temperature (T1)	deg C	23.0000	43.0000	53.0000	
Liquid Flow Rate (Ql)	gpm(US)	2.000	2.000	2.000	
Pressure Recovery Factor (Fl)		0.870	0.870	0.870	
Valve Style Modifier (Fd)		0.290	0.240	0.240	
Cavitation Coefficient (Kc)		0.600	0.600	0.600	
Dynamic Viscosity (Mu)	cP	0.210	0.210	0.210	
Vapor Pressure (Pv)	psia	87.000	101.000	101.000	
Critical Pressure (Pc)	psia	497.000	497.000	497.000	
Atmospheric Pressure	psi	13.00	13.00	13.00	
Pipe Size Up	in	2	2	2	
Pipe Schedule Up		80	80	80	
Pipe Size Down	in	2	2	2	
Pipe Schedule Down		80	80	80	
Nominal Valve Diameter (dv)	in	2	2	2	
Sizing Coefficient (Cv)		0.580	0.335	0.335	
Application Ratio (Ar)		0.557	1.000	1.000	
Cavitation Pressure Drop (dPcav)	psi	7.814	8.116	8.116	
dPchoked	psi	20.205	22.945	22.945	
Warnings					
			Service conditions indicate the fluid is flashing. (11.1.2)	Service conditions indicate the fluid is flashing. (11.1.2)	

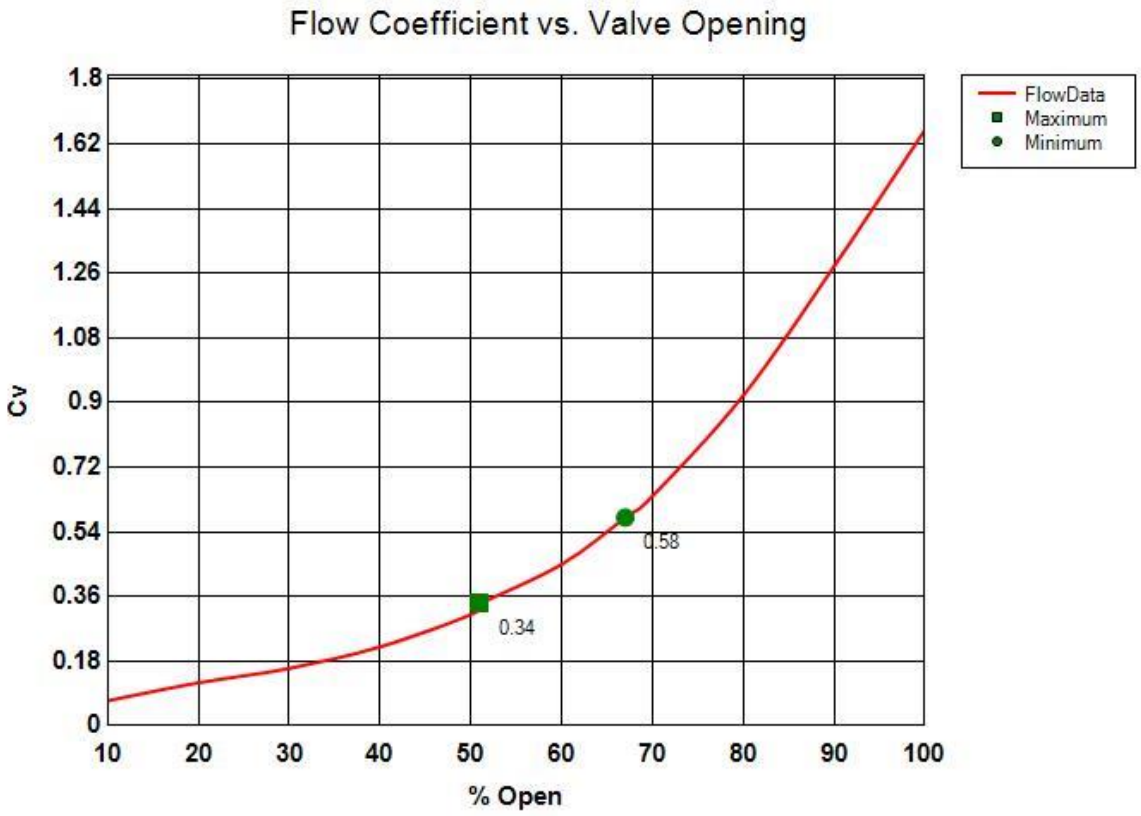

Project Name: 5B1108
Tag Name: 002-LCV/LYI-01-1610
Product: D
Body Style: Globe
Travel: 3/4 Inch

Trim Style: Micro-Form (Eq Pct)
Flow:
Size: 2 Inch
Port Diameter: 1/4 Inch

C9 Skid Design Calculations

2303-8th Street, Nisku Alberta, T9E-7Z3 CANADA

Skid Design Contracted Out to Beck Engineering Ltd. and Calculation Unavailable

2303-8th Street, Nisku Alberta, T9E-7Z3 CANADA



C10 Process Design Calculations (CPU Loading calcs)

2303-8th Street, Nisku Alberta, T9E-7Z3 CANADA

PROCESS DATA SHEET
CARDIUM GAS SEPARATOR
002-V-01-1210

Project: Ferrier Liquid Extraction Plant **Job No.: 407014-00120**
Location: Ferrier **Doc. No. :** 5B1108 Process

PROCESS DESIGN DATA						H/C COMPOSITION (MOLE %)	
OPERATING CONDITIONS		UNITS	MIN	NORMAL	MAX	Hydrogen	
PRESSURE		kPag	600	700	800	Helium	
TEMPERATURE OPERATING		°C	23	43	53	Nitrogen	
DESIGN PRESSURE		kPag		1400		Carbon Dioxide	
DESIGN TEMPERATURE		°C	-45		150	Hydrogen Sulphide	
FLOWRATE	GAS (volumetric)	MMSCFD	12.5		50	Methane	
	GAS (mass)	kg/hr	13,730	54,920		Ethane	
	LIGHT LIQUID (mass)	bbls/day		12		Propane	
	HEAVY LIQUID (mass)	kg/hr		0.00		i-Butane	
	SLUG	m^3		0		n-Butane	
						i-Pentane	
FLUID DATA	GAS MW	-		22.23		n-Pentane	
	GAS DENSITY	SG		0.77		C6	
	GAS DENSITY	kg/m3		7.00		C7	
	GAS VISCOSITY	cP		0.0322		C8	
		-				C9	
	HC LIQUID DENSITY	kg/m3		724.1		C10+	
	HC LIQUID VISCOSITY	cP		0.898		cyclic compounds	
						trace sulphur species	
	WATER DENSITY	kg/m3		1,016.0		Water	
	WATER VISCOSITY	cP		1.19			
	TURN DOWN RATIO	-		4:1			
	GAS COMPRESSABILITY			0.98			
						Total	0.0

NOTES

1)
2)
3)
4)

Unauthorized use or reproduction prohibited.

V-1121

C19 Relief Load Calculations

2303-8th Street, Nisku Alberta, T9E-7Z3 CANADA

Tag#:002-FO-01-1610B

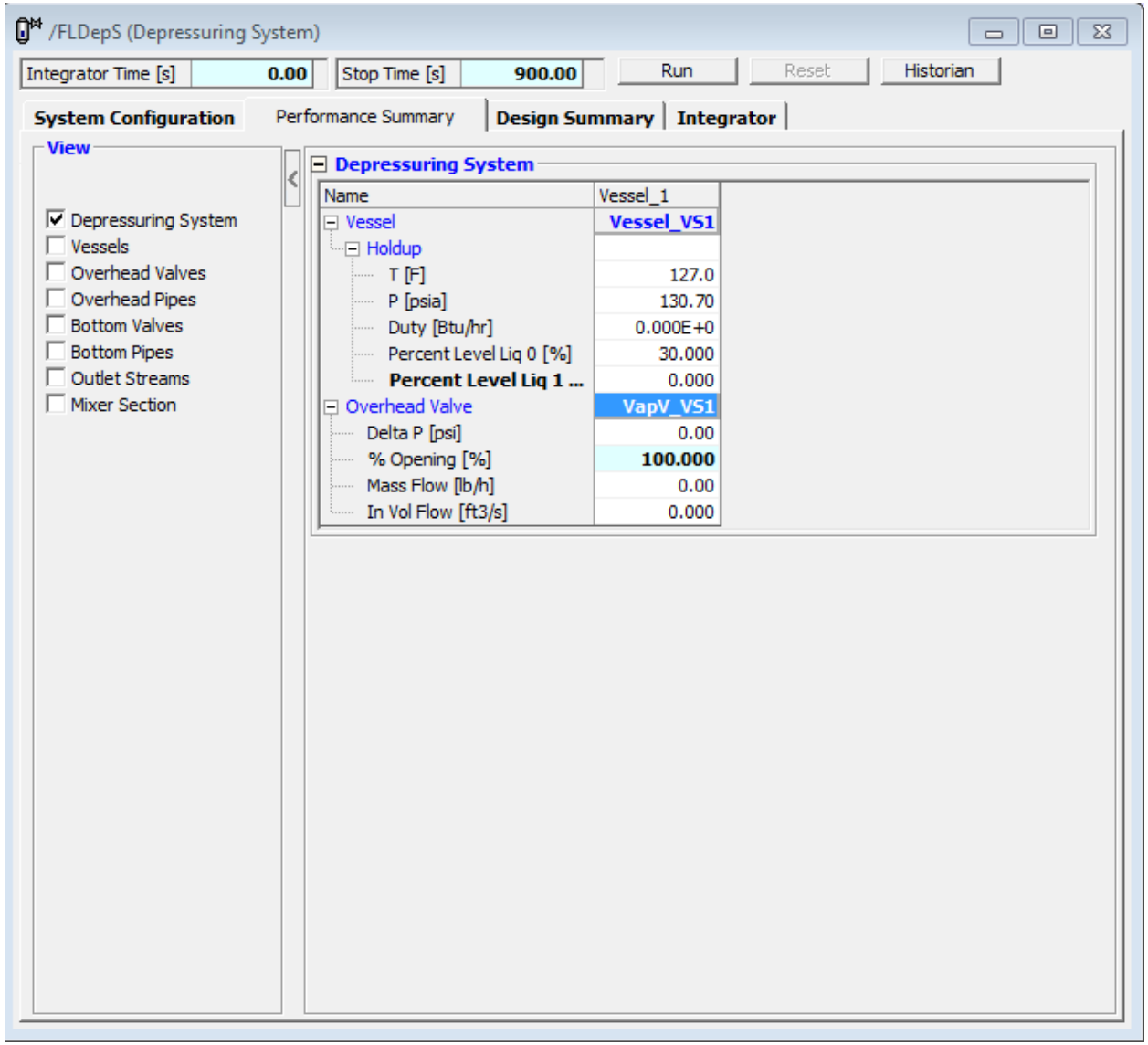

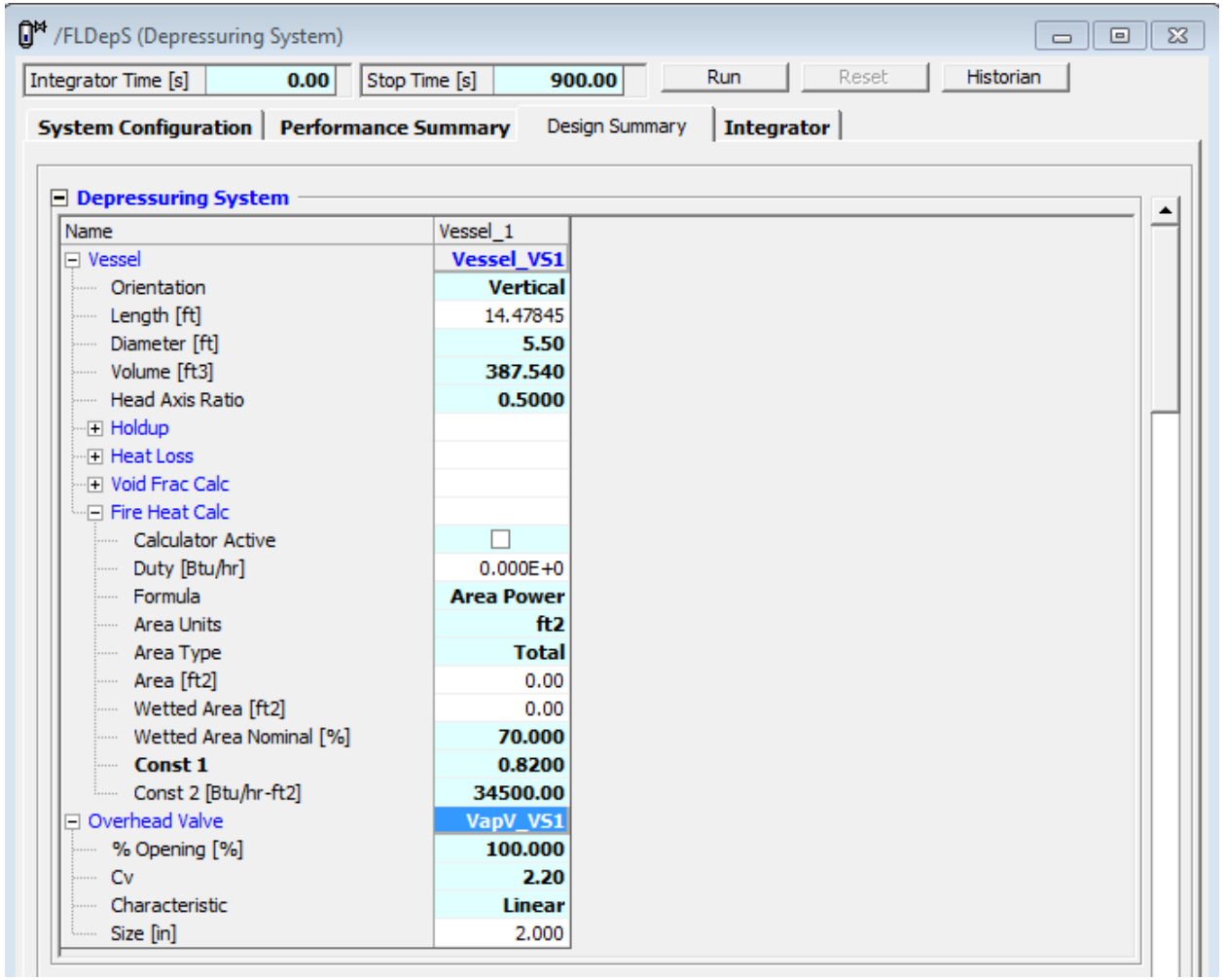
/FLDepS (Depressuring System)
Integrator Time [s] 0.00
Stop Time [s] 900.00
Run
Reset
Historian
System Configuration
Performance Summary
Design Summary
Integrator
Depressuring System
Name
Vessel_1
Vessel
Vessel_VS1
Orientation
Vertical
Length [ft]
14.47845
Diameter [ft]
5.50
Volume [ft3]
387.540
Head Axis Ratio
0.5000
Holdup
Heat Loss
Void Frac Calc
Fire Heat Calc
Calculator Active
Duty [Btu/hr]
0.000E+0
Formula
Area Power
Area Units
ft2
Area Type
Total
Area [ft2]
0.00
Wetted Area [ft2]
0.00
Wetted Area Nominal [%]
70.000
Const 1
0.8200
Const 2 [Btu/hr-ft2]
34500.00
Overhead Valve
VapV_VS1
% Opening [%]
100.000
Cv
2.20
Characteristic
Linear
Size [in]
2.000

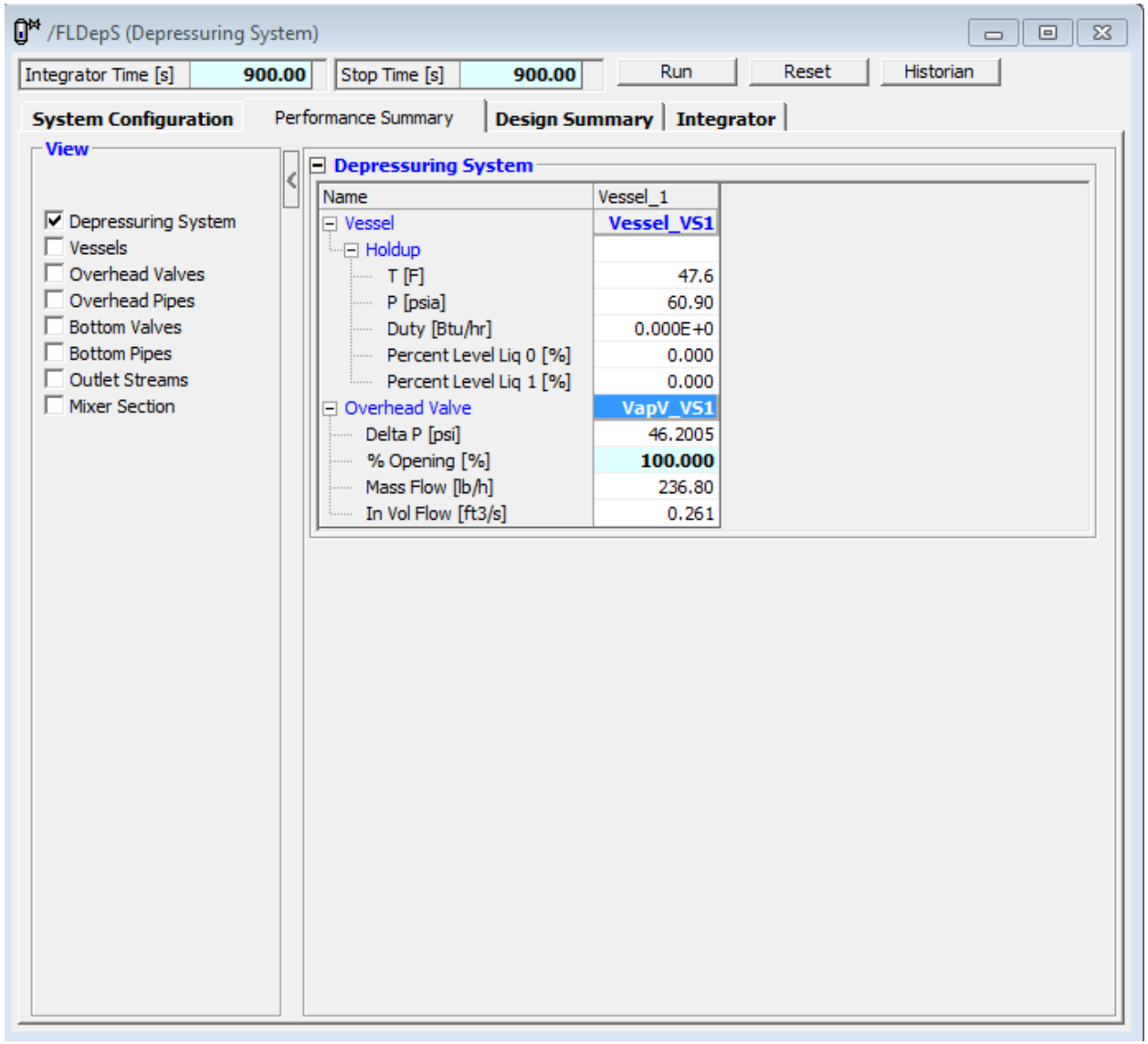
/FLDepS (Depressuring System)
Integrator Time [s] 900.00
Stop Time [s] 900.00
Run
Reset
Historian
System Configuration
Performance Summary
Design Summary
Integrator
View
Depressuring System
Vessels
Overhead Valves
Overhead Pipes
Bottom Valves
Bottom Pipes
Outlet Streams
Mixer Section
Depressuring System
Name
Vessel_1
Vessel
Vessel_VS1
Holdup
T [F]
47.6
P [psia]
60.90
Duty [Btu/hr]
0.000E+0
Percent Level Liq 0 [%]
0.000
Percent Level Liq 1 [%]
0.000
Overhead Valve
VapV_VS1
Delta P [psi]
46.2005
% Opening [%]
100.000
Mass Flow [lb/h]
236.80
In Vol Flow [ft3/s]
0.261


FLDepS_Vessel_VS1
883 [s]
1000.00
750.00
500.00
250.00
0.00
MassFlow [lb/h]
303.00
193.43
83.85
-25.73
-135.30
T [F]
2
102
202
302
402
502
602
702
802
902
Time [s]
49.01
FLDepS.Vessel_VS1.Holdup.T = 47.53 [F]
61.78
239.90
FLDepS.Vessel_VS1.Vap.MassFlow = 236.70 [lb/

Flow Coefficient to Orifice Diameter

Calculate any orifice diameter from a given flow coefficient, Kv, cv, or Av.

Note: - You cannot use commas (,) as decimal points. Please use periods (.)
Example: 1.02 not 1,02

Flow Coefficient	2.2	Cv (US)
Coefficient of Discharge	.6	

Calculate | Reset | Print

Orifice Diameter	0.350632	in



C23 Flowmeter Sizing Calculation

2303-8th Street, Nisku Alberta, T9E-7Z3 CANADA

DANIEL®

Orifice calculation for Pressure Differential - Flange Taps - Gas

Customer: Devon/WP
Tag: 002-FE-01-1610

Flow Rate	**50,000,000.00**	**Standard Cubic Feet/Day**
Differential Pressure	**27.98**	**kPa**
Operating Temperature	**43.00**	**Deg C**
Operating Pressure	**700.00**	**kPa (gauge)**
Base Specific Gravity	**0.77**	
Compressibility Factor:		
Zf	**0.97000**	
Pipe Diameter	**13.250**	**Inches**
Bore Diameter (approximate)	**8.625**	**Inches**
Beta (approximate)	**0.65094**	

Note: Values for the beta ratio are approximate, typically within
2% - 5% for gases and steam
1% for liquids
The ASME MFC-3M 1989 equation is used in this program. However, several equation factors are assumed and can directly affect the calculation results

Coefficient of Thermal Expansion:	*1.0*
Discharge Coefficient:	*0.6*
Base Temperature:	*60 Deg F (15.56 Deg C)*
Base Pressure:	*14.7 PSIA (101.3 kPa-A)*
Pressure Tap Location:	*Flange Tap*

Also, this program does not take into consideration two calculation variables - the Reynolds Number correction and the expansion factor.

If it is necessary to have a closely specified beta ratio, differential pressure, or flow rate, please consult your Daniel representative for assistance

Daniel Division Headquarters
Houston, Texas, USA
Tel:(713)467-6000
Fax:(713)827-3880

Calgary, Alberta, Canada
Tel:(403)279-1879
Fax:(403)236-1337

Swinton Grange, England
Tel:+44(0)1653-638300
Fax:+44(0)1653-600425

Singapore
Tel:+65-777-8211
Fax:+65-770-8031



C27 Insulation and Selling Thickness Calculation Including Heat Loss and Skin Temperature

2303-8th Street, Nisku Alberta, T9E-7Z3 CANADA

This section does not apply



C28 Vessel Lifting Lug Calculation Including Vessel Load Stress

2303-8th Street, Nisku Alberta, T9E-7Z3 CANADA



See section C1



C32 Thermowell Stress and Wake Frequency Calc

2303-8th Street, Nisku Alberta, T9E-7Z3 CANADA

The New Standard | Why Emerson | Tools to Help You | Preliminary Calculations

Preliminary Calculation Tool

With our preliminary calculation tool, you can perform thermowell calculations per ASME PTC 19.3TW-2010 early in your design process. Enter the process fluid properties, piping specifications, and thermowell dimensions to check whether the thermowell passes the ASME standard requirements. With the ability to change inputs and perform iterative calculations, you can select the perfect thermowell design for your process.

Is your design finalized?

Access our R21 report for an official evaluation.

(* fields are mandatory.) Select language: English

Select Unit: Metric US Customary

Fluid Properties

Dynamic Fluid Viscosity (μ):*	0.012	[cP]	Fluid Density (ρ):*	0.0537	[lb/ft3]
Physical State:	Gas		Operating Temperature (T):*	110	[°F]
Process Fluid Velocity (V):*	83	[ft/s]	Mass Flow Rate	0.00000	[lb/s]
Operating Pressure (P):*	116.5	[psi]			

Pipe Specification

Select Standard: ANSI DIN

Nominal Size:	NPS 14		Wall Thickness (TPW):	0.375	[in]
Schedule Number:	40S/STD		Pipe Inside Diameter:	13.25	[in]
Support Height to Pipe OD:*	1.375	[in]	Shielded Length (L_0):	1.750000	[in]

Thermowell Data

Thermowell Style:	Tapered Shank		Mounting Configuration:	Threaded	
Stem Material:	ASTM A 182 GR F316L				
Root Diameter (A):*	1.06	[in]	Tip Thickness (t):*	0.25	[in]
Tip Diameter (B):*	0.75	[in]	Bore Diameter (d):*	0.260	[in]
Unsupported Length (L):*	8	[in]	Reduced Diameter Length (L_s) :	0	[in]

Thermowell is acceptable for process conditions.

Reset

Calculate

UNOFFICIAL CALCULATION

WIKA Instruments Canada Ltd.

Part of your business

Customer:	Worley Parsons (Devon)	**Name:**	Brendan Troitsky
Project:	5B1108	**Date:**	August 12, 2014
Ref. -No.:	TW-01-1610C		
Tag-No.:	TW	**Calculation result:**	good

WIKA Instruments Canada Ltd.

Edmonton Head Office
3103 Parsons Road
Edmonton, Alberta, T6N 1C8

phone: +1 780 463 7035
fax: +1 780 462 0017
email: info@wika.ca
web: http://www.wika.ca

Thermowell Calculation Program v2.3
Results to ASME PTC 19.3 TW - 2010

Description WIKA / ASME			
Result:			
Result	Eval.	good	
Frequency ratio	r	0.77	fw/fnc
Ratio limit fw/fnc	rmax_	0.80	inline?
Safety fatigue	dyn	79.35	/
Safety bending	stat	1185.43	/
Safety pressure	Sp	58.26	/
Reduced length (rmax)	U_{red} / L_{red}		in.
Note code	/		

Description WIKA / ASME			
Process data:			
Temperature	T	109.40	°F
Pressure	P	116.50	psi
Max.velocity	v	82.87	ft/s
Med.density	rho	0.05	lb/ft3
Kin.viscosity	ny		ft2/1000s
Pipe data:			
Inner diameter	Di		in.
Shielded length	SL / Lo		in.
Usable nozzle length *)	UNL /		in.
Nozzle inner diameter *)	NID /		in.

*) for support collar

Thermowell sketch

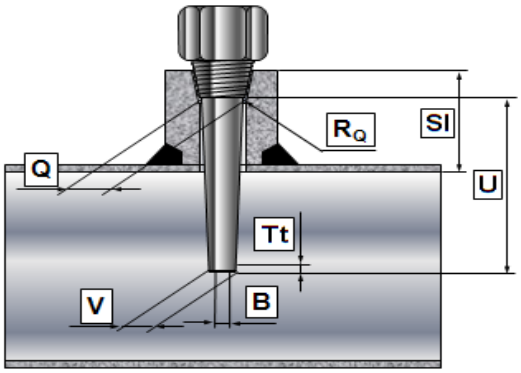

Thermowell data:			
WIKA model		TW15	Name
Connection		screwed	
Shape		tapered	Name
Insertion length	U / L	9.000	in.
New insertion length	U_{new} /		in.
Reduced length	U_{red} /		in.
Stepped length	U_S / Ls	0.000	in.
Step radius	R_S / rB	0.000	in.
Root radius	R_Q / rA	0.000	in.
Bore diameter	B / db	0.260	in.
Root diameter	Q / B	1.063	in.
Tip diameter	V / A	0.750	in.
Tip thickness	Tt / Tt	0.250	in.
Material data:			
Grade	mat	316L	Name
Spec. weight	D(T)	0.289	lb/in3
Youngs modul	E(T)	28057.5	ksi
Factor for temp.	FT	0.984	/
Fatigue strength	Sf(T)	5315.4	psi
Max.all.stress	1.5S(T)	24697.5	psi
Press. strength	S(T)	16465.0	psi
Fatigue class	class	B	

WIKA has made every reasonable attempt to validate the calculation procedure contained in this spread sheet, however, responsibility for validation rests solely with the user.
This WIKA ASME PTC 19.3 TW 2010 spread sheet copyright © 2010 (compatible with Excel 2007/2010) is intended to assist the experienced designer of thermowells and should not be considered as a replacement for professional engineering.The end user is responsible to assure that the calculation method is compatible to the process conditions.
For further information see Operation Instruction.



C33 HVAC Design Calculation

2303-8th Street, Nisku Alberta, T9E-7Z3 CANADA

Heat Transfer Calculation By:

17321 - 106 Ave
Edmonton, Alberta
T5S 1E7
p: (780) 483-0141
f: (780) 489-4302

Rev: 1 - Issued for Construction
Date: 2013-11-12

For: **Devon Canada**
WorleyParsons
Ferrier Central Oil Battery
1108 - Cardium Inlet Separators 002-PK-01-1600
Heating and Ventilation System Design

Design Conditions Latitude: 52 Time: 4:00 PM Location: near Rocky Mountain House, Alberta

Indoor

Summer temperature:	89 F	(32 C)
Winter temperature:	59 F	(15 C)
Hum. Ratio ΔW:	0.000281	
Site Elevation:	3381 ft	(1031 m)

Outdoor

Summer temperature:	dB 82 F	(28 C)
	wB 64 F	(18 C)
Winter temperature:	-40 F	(-40 C)
Summer grains of moisture (1%):	79 gr/lb	
Daily temperature range:	23 F	(13 C)

U-Values (1/R)

Floor:	R 12	= 1 / 12	= 0.083
Walls:	R 20	= 1 / 20	= 0.050
Roof:	R 30	= 1 / 30	= 0.033
Windows:	R 2	= 1 / 2	= 0.500
Doors:	R 6	= 1 / 6	= 0.167

Room Volume
measured from drawings: 6,720 ft³(190.29 m³)

Given Equipment Heat Gain
(none given) 0.00 kW

Building Components:

	Area, Length CFM or BTUH	Sensible Gain (BTUH)	Latent Gain (BTUH)	Total Heat Gain (BTUH)	Total Heat Loss (BTUH)
Floor	340 sqft	204	0	204	2,805
N Wall	335 sqft	0	0	0	1,658
Windows	4 sqft	75	0	75	198
Door(s)	17 sqft	0	0	0	281
E Wall	381 sqft	140	0	140	1,886
Windows	9 sqft	394	0	394	446
S Wall	335 sqft	0	0	0	1,658
Windows	4 sqft	311	0	311	198
Door(s)	17 sqft	0	0	0	281
W Wall	381 sqft	0	0	0	1,886
Windows	9 sqft	598	0	598	446
Roof	358 sqft	564	0	564	1,181
People	2 ppl	450	210	660	0
Infiltration Allowance[5]	112 CFM	0	0	0	12,230
Ventilation[6]	850 CFM	0	1,156	1,156	92,817
Equip Heat Gain[3]	0.00 kW	0	0	0	0
Lighting (2W/sqft)[2]	680 W	2,320	0	2,320	0
		5,056	**1,366**	**6,422**	**117,970**

Summary:

Heat Loss:			**Heat Gain:**		
Ventilation Loss	92,817 BTUH	(27.2 kW)	Given Heat Gain	0 BTUH	(0.0 kW)
Building Loss (+20%)	30,183 BTUH	(8.8 kW)	Building & Ventilation Gain	6,422 BTUH	(1.9 kW)
Total Heat Loss	**123,001 BTUH**	**(36.1 kW)**	**Total Heat Gain**	**6,422 BTUH**	**(1.9 kW)**

Required Ventilation for Cooling:

Total combined ventilation rate required to cool the building to 7 °F above ambient **800 ACFM (7.1 ACH)**

Heat Transfer Calculation By:

ENER-TECH

17321 - 106 Ave
Edmonton, Alberta
T5S 1E7
p: (780) 483-0141
f: (780) 489-4302

Rev: 1 - Issued for Construction
Date: 2013-11-12

For: **Devon Canada**
WorleyParsons
Ferrier Central Oil Battery
1108 - Cardium Inlet Separators 002-PK-01-1600
Heating and Ventilation System Design

System Description:

The heating and ventilation system for this building consists of the following equipment: one 850ACFM [401AL/s] continuously operating wall mounted exhaust fan tag #: 002-EF-01-1681. One 850ACFM [401AL/s] cooling/emergency wall mounted exhaust fan c/w remote thermostat tag #: 002-EF-01-1682. One 24x24 [610x610] inlet damper c/w 120V damper actuator set to 50% minimum position. One 70kW glycol unit heaters c/w remote thermostat. All equipment shall be rated for 575/3/60. All equipment shall be rated for operation in a Class I, Div 1 Group C&D area. All weather hoods shall be by the building vendor and c/w screen.

Ventilation:

Building is continuously ventilated by 002-EF-01-1681 and therefore under a constant negative pressure. Makeup air enters the building through the intake dampers which shall be set to 50% open minimum position.

Emergency Ventilation:

On a low level (AAH) gas detection signal (by others) the cooling/emergency fan 002-EF-01-1682 is also energized and the inlet damper is fully opened. Both fans running equates to 15ACH. Upon detection of high level (AAHH) amounts of gas, all equipment shall be shut down; see 'Controls' section below. The emergency ventilation sequence shall override the cooling ventilation sequence for the building.

Summer (cooling):

The cooling/emergency exhaust fan 002-EF-01-1682 works independently for additional cooling based on its own thermostat. When this fan is energized, the inlet damper is opened to 100%. Both fans work to ventilate and maintain the building below the max indoor design temperature of 89F [32C] during peak load conditions. Set 002-EF-01-1682's thermostat to 70F [21C] to keep the building cooler when the conditions permit.

Winter (heating):

During heating mode, the unit heater operates as required by its thermostat to maintain the min indoor design temperature of 59F [15C] during peak load conditions. The unit heaters are sized based on no internal equipment heat gains being present. Set the unit heater thermostat to 64F [18C] to keep the building warmer when the conditions permit.

Controls:

Design and supply of controls for the heating and ventilation system is not by Ener-Tech. ESB, fire shutdown, gas detection systems and the integrating controls for the heating and ventilation system are not by Ener-Tech. Sequence of operation described above is provided only as a guide to the controls designer and should not be interpreted as detailed engineering of this H&V system.

Notes:

1. HVAC system is designed based on the project spec; 407014-00120-00-HV-PHL-0001
2. Lighting load is based on 2W/sqft of floor space.
3. No equipment heat gains were given for this calculation. Air volume of fans were given and are based on ACH rate alone.
4. Building envelope assumed to be constructed to an "average" tightness as defined by ASHRAE.
5. 1ACH of infiltration allowed for in this calculation per spec.
6. Ventilation is based on one pre-selected, 850CFM fan which equal 7.6ACH for this building. Building pressure will fluctuate with wind pressure, door usage and the final tightness of the building envelope.
7. Heating requirements are based on ventilation and building losses with no internal equipment heat gains present.
8. Building volume is measured from the building drawings provided and represents the volume when the building is empty.
9. Calculation is based on the CLTD (cooling load temperature difference) method. Design parameters are inputed into a computer model and summarized here for clarity.

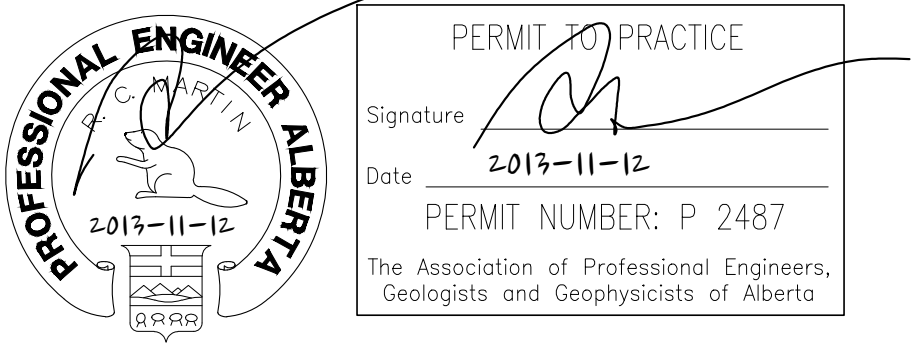



C34 Enclosure Ventilation System Calculation

2303-8th Street, Nisku Alberta, T9E-7Z3 CANADA

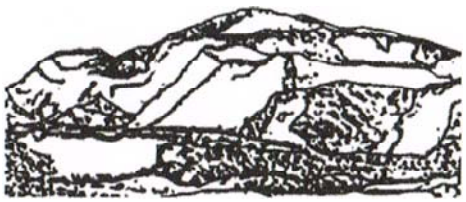

Snowdon Consulting Inc.
Electrical and Controls Engineering Calgary, Alberta

Area Classification of 5Blue Devon Compressed Cardium Gas Separator

For

002-BU-01-1600

Tarpon Energy Services Ltd.



February 2014



PERMIT TO PRACTICE SNOWDON CONSULTING INC. PERMIT NUMBER: P-7513

The Association of Professional Engineers, Geologists and Geophysicists of Alberta

Only valid for Rev. 1
Previous revision (Rev. 0)
confirmed By R.G Snowdon

Summary

The area classification for the 5Blue Devon Compressed Cardium Gas Separator 002-PK-01-1600 is Class I, Zone 2. This classification is justified on the basis of natural ventilation through the skid building being sufficient to dilute any fugitive emissions to less than 25% of the lower explosive limit of natural gas in the building. The building must be maintained so that no revisions that would impede the natural flow of air through the building will be permitted. This area classification evaluates the building and its piping only, and does not take into account any factors due to the ultimate location and placement of the skid.

Fugitive Emission Calculations

Emission rates have been calculated as per API Recommended Practice 505 using factors from the API Publication 4322 **Fugitive HydroCarbon Emissions from Petroleum Production Operations**, 1980. Emission factors from Table E-3 for Gas Plant Operations were used with the component counts assigned to Gas, Gas and Condensate, or Water plus Hydrocarbon.

All calculations are shown, and the classification as Zone 2 is substantiated.

Valve, flange, connection and shaft seal counts were made by reviewing the process and instrumentation drawings for the skid along with the material lists.

Airflow Calculations

Airflow calculations were made using equations from section 6.6.2.4.6 of API RP505. These equations are used to determine vent area to achieve 12 air changes per hour. As the separator skid requires far less than one air change per hour, the existing gable exhaust fans and low level louvers will be more than adequate for dilution of fugitive emissions.

Area Classification of Gas Separator

The attached calculation sheets show that adequate ventilation exists in the gas separator package provided that the vents and louvers are maintained in the open state. With adequate ventilation, it is appropriate to classify this building as Class I, Zone 2.

The placement of ventilation openings on opposite sides of the building is important to ensure a flow of air through the building without "short-circuiting" the airflow, that is, if all air vents were near a single corner of the building, then there may be a dead air space in the opposite end of the skid.

This skid also has combustible gas detection included, which will activate the exhaust fan system and move more than twelve air changes per hour through the building. This qualifies the building as an "adequately ventilated" building, which also enables a classification of Class I, Zone 2.

PROFESSIONAL ENGINEER
R. G. SNOWDON
FEB 09 2014

Appendix A – Area Classification Principles

Canadian Electrical Code

The Canadian Electrical Code requires special design and installation practices for electrical equipment that is to be installed in a hazardous area. Hazardous areas are defined in the code as Class I locations where flammable gases or vapours are or may be present in the air in quantities sufficient to produce explosive gas atmospheres; {CEC 18-004(a)}. Further, Class I locations are subdivided into Zone 0, Zone 1, and Zone 2 locations.

Areas where explosive atmospheres are continuously present or are present for long periods are Zone 0.

Areas adjacent to Zone 0 areas, or where explosive atmospheres are likely to occur in normal operation, or where explosive atmospheres exist frequently due to repair or maintenance operations or because of leakage are classified as Zone 1.

Areas where explosive gas atmospheres are not likely to occur in normal operation, and if they do occur will exist for a short time only are classified as Zone 2. This includes areas where:

- Gases are normally confined in closed systems from which they can escape only as a result of accidental rupture or breakdown, and
- Explosive atmospheres are normally prevented by adequate ventilation, but may occur as a result of failure of the ventilation system, and
- Areas adjacent to Zone 1 locations that do not have a positive pressure ventilation system to prevent communication of gas from the Zone 1 area.

In normal operations areas where gas may accumulate due to fugitive emissions from pressurized equipment, an adequate ventilation system may reduce the hazardous location to Zone 2.

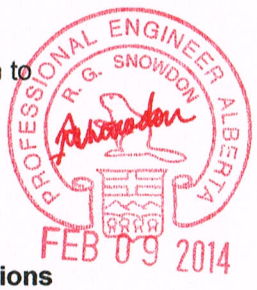

American Petroleum Institute

RP 505, **Recommended Practice for Classification of Locations for Electrical Installations at Petroleum Facilities Classified as Class I, Zone 0, Zone 1 and Zone 2**, First Edition, references many concepts used in the NEC which compare closely to the Canadian Electrical Code (CEC). Other concepts include the amount of time in a year when a hazardous concentration of gas may exist. In 6.5.8.2 and 6.5.8.3, areas with hazardous concentrations of gas for 1000 or more hours per year would be Zone 0; between 10 and 1000 hours per year would be Zone 1, and less than 10 hours per year would be Zone 2. This is not, however, a hard and fast rule, and should be used as a guideline only as to an appropriate classification of a particular area.

Adequate ventilation is determined by calculating that amount of dilution required to keep the concentration of gas to 25% of the Lower Explosive Limit (LEL) and then to apply a further safety factor of 4 to the required airflow.

Alberta Oilfield Practice

In Alberta, the Electrical Protection Branch issued Oil and Gas Regulations that prescribed almost all oilfield buildings other than compressor buildings as Class I, Division 1. In the past 15 years or so, many designers have taken a more pro-active role in evaluating potential levels of

combustible gases, and classified many areas as Division 2, or Zone 2. The regulatory requirements are for a Professional Engineer to certify these area classifications with documentation. The approach most often taken is to do a fugitive emission study and evaluate the likely concentration of combustible gas that may arise. If the level is low enough, then a Division 2 or Zone 2 classification is used. The fugitive emission studies generally use factors for component leakages developed by the API.

For the purposes of this report, the calculation of "adequate ventilation" is based on fugitive emission factors published by the American Petroleum Institute in their publications listed in Appendix B.



Appendix B – List of Publications and Standards

CE Code Handbook, 2012

RP 505, **Recommended Practice for Classification of Locations for Electrical Installations at Petroleum Facilities Classified as Class I, Zone 0, Zone 1 and Zone 2**, First Edition, November 1997 (ANSI/API RP 505-1998)

API Publication 4322 **Fugitive HydroCarbon Emissions from Petroleum Production Operations**, 1980

Code for Electrical Installations at Oil and Gas Facilities; 4th Edition - 2013

Appendix C – Reference Drawings & Documents

5Blue Piping & Instrumentation Drawings 5B1108-02-DR-00-001

5Blue Document 5B1108-02-EL-00-001



Appendix D – Calculation Sheets

API RP505 6.6.2.4.6 Equation 1 and 2

To achieve	**0.32** air changes per hour
Louver Area required	
0.38 sq. ft.	

To calculate vent area to achieve 12 air changes per hour.			
Volume	7111.7	cu. ft.	
Temperature inside	80	degrees Fahrenheit	540 degrees Rankine
Temperature outside	70	degrees Fahrenheit	530 degrees Rankine
Height of lower opening	1	ft.	
Height of upper opening	20	ft.	
Height differential	19.0	ft.	
h Neutral Pressure level above centre of lower opening	9.4	ft.	
Louver Area required	14.2	sq. ft.	
Louver area required with size difference	14.2	sq. ft.	
Ratio of inlet to outlet area	1	If <1 then 1/x	1
Increase in flow percent (from Fig 4.6)	0%		
Area of lower opening	4	sq. ft.	
Area of upper opening	4	sq. ft.	
Size of square louver	3.8	feet	

Ratio of outlet to inlet or vice-versa	Increase in percent
1	0
1.25	14
1.5	19
1.75	23
2	26
2.25	28.5
2.5	31
2.75	32.5
3	34
3.25	35
3.5	36
3.75	37
4	37.5
4.25	38
4.5	38
4.75	38.5
5	38.5
5.25	39
5.5	39
5.75	39
6	39

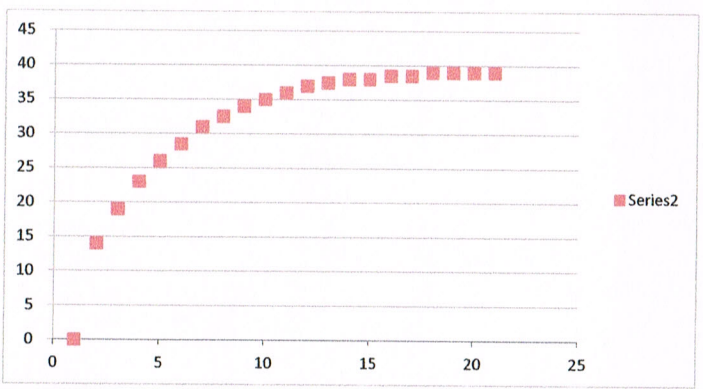

Figure 4.6

PROFESSIONAL ENGINEER ALBERTA R. G. SNOWDON FEB 09 2014

ADEQUATE BUILDING VENTILATION RATE REQUIRED BASED ON PREDICTED HYDROCARBON EMISSIONS PER COMPONENT FOR GAS PLANT OPERATIONS, PER API RECOMMENDED PRACTICE 505 (RP 505)

CLIENT: Tarpon 5Blue Devon
JOB NO.: TP017
DATE: 2014-02-09
PROJECT: Ferrier Compressed Cardium Gas Separator
BUILDING: Gable Roof
REV: 0
MAX. AMB. TEMP. (Ta): 104 (F) DIM: L' = 20.00 W' = 17 Eve H' = 19.50 Ridge H' = 22.33 VOL = 7111.7 CU FT
BY: Reg Snowdon

COMPONENT		GROUP 1 (C1 -Methane)			GROUP 2 (C2 - C4)			GROUP 3 (Gas)			GROUP 4 (Gas and Condensate)			GROUP 5 (C6 Mixtures)			GROUP 6 (Water plus hydrocarbon)		
TYPE	STYLE	NO. OF COMPONENTS	PREDICTION FACTOR (LBS/DAY)	TOTAL EMISSIONS (LBS/DAY)	NO. OF COMPONENTS	PREDICTION FACTOR (LBS/DAY)	TOTAL EMISSIONS (LBS/DAY)	NO. OF COMPONENTS	PREDICTION FACTOR (LBS/DAY)	TOTAL EMISSIONS (LBS/DAY)	NO. OF COMPONENTS	PREDICTION FACTOR (LBS/DAY)	TOTAL EMISSIONS (LBS/DAY)	NO. OF COMPONENTS	PREDICTION FACTOR (LBS/DAY)	TOTAL EMISSIONS (LBS/DAY)	NO. OF COMPONENTS	PREDICTION FACTOR (LBS/DAY)	TOTAL EMISSIONS (LBS/DAY)
VL	GATE		1.72000	0.00000		0.68400	0.00000	3	0.49200	1.47600		0.34700	0.00000		0.02820	0.00000	1	0.000010	0.00001
	MULT		1.08000	0.00000		0.38300	0.00000		0.46400	0.00000		0.25900	0.00000		0.04370	0.00000		0.000016	0.00000
	BALL		0.07080	0.00000		0.03030	0.00000	63	0.01580	0.99540		0.01230	0.00000	15	0.00076	0.01133	4	0.000000	0.00000
	PLUG		2.05000	0.00000		0.87500	0.00000		0.48100	0.00000		0.36400	0.00000		0.02470	0.00000		0.000008	0.00000
	GLBE		2.75000	0.00000		1.08000	0.00000	3	0.91300	2.73900		0.60300	0.00000		0.05900	0.00000		0.000022	0.00000
	NDLE		0.11700	0.00000		0.04990	0.00000	1	0.02480	0.02480		0.01890	0.00000		0.00117	0.00000		0.000000	0.00000
	CHCK		0.02670	0.00000		0.01150	0.00000	2	0.00539	0.01078		0.00431	0.00000		0.00026	0.00000		0.000000	0.00000
	BTFY		2.77000	0.00000		1.11000	0.00000		0.80400	0.00000		0.53900	0.00000		0.04280	0.00000		0.000015	0.00000
	RELF		0.42300	0.00000		0.19500	0.00000		0.08660	0.00000		0.06970	0.00000		0.00415	0.00000		0.000001	0.00000
		SUB-TOTAL		0.00000	SUB-TOTAL		0.00000	SUB-TOTAL		5.24598	SUB-TOTAL		0.00000	SUB-TOTAL		0.01133	SUB-TOTAL		0.00001
CN	FLFF		0.09150	0.00000		0.02040	0.00000	186	0.02270	4.22220		0.04970	0.00000	35	0.00011	0.00389	NOT APPLICABLE		
	FLRI		0.00198	0.00000		0.00044	0.00000		0.00048	0.00000		0.00104	0.00000		0.00000	0.00000			
	THRD		0.07120	0.00000		0.01570	0.00000	16	0.01820	0.29120	2	0.03880	0.07760		0.00008	0.00000			
	GASK		0.00591	0.00000		0.00130	0.00000	250	0.00146	0.36500		0.00312	0.00000		0.00001	0.00000			
	UNIN		0.45000	0.00000		0.09910	0.00000		0.12000	0.00000		0.24900	0.00000		0.00057	0.00000			
	TUBE		0.03620	0.00000		0.00798	0.00000		0.00993	0.00000		0.02010	0.00000		0.00005	0.00000			
	ORIN		0.98900	0.00000		0.21700	0.00000	2	0.42700	0.85400		0.66000	0.00000		0.00325	0.00000			
	FLGA		0.19400	0.00000		0.04190	0.00000		0.05050	0.00000		0.10500	0.00000		0.00024	0.00000			
		SUB-TOTAL		0.00000	SUB-TOTAL		0.00000	SUB-TOTAL		5.73240	SUB-TOTAL		0.07760	SUB-TOTAL		0.00389			
HA	FLFF		0.12200	0.00000		0.05330	0.00000		0.00022	0.00000	NOT APPLICABLE			NOT APPLICABLE			NOT APPLICABLE		
	THIF		0.42600	0.00000		0.42500	0.00000		0.21300	0.00000									
		SUB-TOTAL		0.00000	SUB-TOTAL		0.00000	SUB-TOTAL		0.00000									
SG	GLSS					0.00001	0.00000	NOT APPLICABLE			3	0.00851	0.02553	NOT APPLICABLE			NOT APPLICABLE		
					SUB-TOTAL		0.00000				SUB-TOTAL		0.02553						
SP	RERO		4.64000	0.00000		1.95000	0.00000		1.11000	0.00000		0.00651	0.00000		0.00296	0.00000	NOT APPLICABLE		
	ROSH		2.87000	0.00000		1.49000	0.00000		1.41000	0.00000		0.33700	0.00000		0.12800	0.00000			
	MESL		4.88000	0.00000		1.51000	0.00000		0.56900	0.00000		0.00203	0.00000		0.00093	0.00000			
		SUB-TOTAL		0.00000	SUB-TOTAL		0.00000	SUB-TOTAL		0.00000	SUB-TOTAL		0.00000	SUB-TOTAL		0.00000			
DI	VLOP		0.97800	0.00000		0.11300	0.00000		2.19000	0.00000	NOT APPLICABLE			NOT APPLICABLE			NOT APPLICABLE		
	DPRS		0.33900	0.00000		0.03940	0.00000		0.74500	0.00000									
		SUB-TOTAL		0.00000	SUB-TOTAL		0.00000	SUB-TOTAL		0.00000									
SM	GATE		3.07000	0.00000		1.32000	0.00000		1.54000	0.00000		0.62500	0.00000		0.02730	0.00000	NOT APPLICABLE		
	BALL		0.00862	0.00000		0.00388	0.00000		0.00490	0.00000		0.00189	0.00000		0.00008	0.00000			
	PLUG		0.04200	0.00000		1.86000	0.00000		2.21000	0.00000		0.83200	0.00000		0.04270	0.00000			
	GLBE		0.17600	0.00000		0.07320	0.00000		0.07860	0.00000		0.03240	0.00000		0.00137	0.00000			
	NDLE		0.34800	0.00000		0.15300	0.00000		0.15900	0.00000		0.06900	0.00000		0.00257	0.00000			
	RELF		3.37000	0.00000		1.42000	0.00000		1.74000	0.00000		0.66900	0.00000		0.02710	0.00000			
		SUB-TOTAL		0.00000	SUB-TOTAL		0.00000	SUB-TOTAL		0.00000	SUB-TOTAL		0.00000	SUB-TOTAL		0.00000			
PP	OPTK	NOT APPLICABLE			NOT APPLICABLE			NOT APPLICABLE			NOT APPLICABLE				0.577	0.00000		0.577	0.00000
														SUB-TOTAL		0.00000	SUB-TOTAL		0.00000

TOTAL GROUP 1	0.00000	TOTAL GROUP 2	0.00000	TOTAL GROUP 3	10.97838	TOTAL GROUP 4	0.10313
MOL% GROUP 1	0.00000	MOL% GROUP 2	0.00000	MOL% GROUP 3	98.93346	MOL% GROUP 4	0.92937
Average mW GRP 1	18.19	Average mW GRP 2	42.24	Average mW GRP 3	26.12	Average mW GRP 4	46.33
%LEL GROUP 1		%LEL GROUP 2		%LEL GROUP 3	5	%LEL GROUP 4	
TOTAL (ALL GROUPS)	11.0967	LBS/DAY	0.4624	LBS/HR (E)	26.36	AVERAGE mW	5.0

TOTAL GROUP 5	0.01521	TOTAL GROUP 6	0.00001
MOL% GROUP 5	0.13707	MOL% GROUP 6	0.00010
Average mW GRP 5	67.53	Average mW GRP 6	56.31
%LEL GROUP 5		%LEL GROUP 6	
MIN %LEL		TOTAL %	100.00

VENTILATION CALCULATIONS (PER API RP 505):

CORRECTED IDEAL GAS MOLE VOL. @ AMBIENT TEMP & STD. PRESS. = 411.5 CU FT.

REQUIRED VENTILATION RATE Qr = G / (25 %LEL * MIN %LEL) = 9.622979 CFM.

MINIMUM AIR CHANGE REQUIRED = Q * 60 / BLDG VOLUME = 0.32 AIR CHANGE PER HOUR.

PREDICTED HYDROCARBON LEAK RATE G = (E * V) / (60 * AVERAGE mW) = 0.120287 CFM.

APPLY SAFETY FACTOR OF 4 TO OBTAIN THE RECOMMENDED VENT. RATE Q = 4 * Qr = 38.49 CFM.

PROFESSIONAL ENGINEER ALBERTA R. G. SNOWDON FEB 09 2014

D. ELECTRICAL

2303-8th Street, Nisku Alberta, T9E-7Z3 CANADA



D1 Termination Drawings

2303-8th Street, Nisku Alberta, T9E-7Z3 CANADA



See section D23

D10 Instrument / F&G Installation Details

2303-8th Street, Nisku Alberta, T9E-7Z3 CANADA

This section does not apply



D20 Electrical Equipment
SELLER Drawings

2303-8th Street, Nisku Alberta, T9E-7Z3 CANADA

This section does not apply



D21 Equipment Seller Catalogue Sheets

2303-8th Street, Nisku Alberta, T9E-7Z3 CANADA

This section does not apply

D23 Junction Box Detail Drawings

2303-8th Street, Nisku Alberta, T9E-7Z3 CANADA

Date: 2007.03.29 04:01 pm File Name: C:\1 Snowdon Consulting Inc\Electrical Tools and Templates\SCI Drawings\SCI Title Block 2.DWG By: RGS

002-JBC-01-1601

120VAC CONTROL WIRING JUNCTION BOX

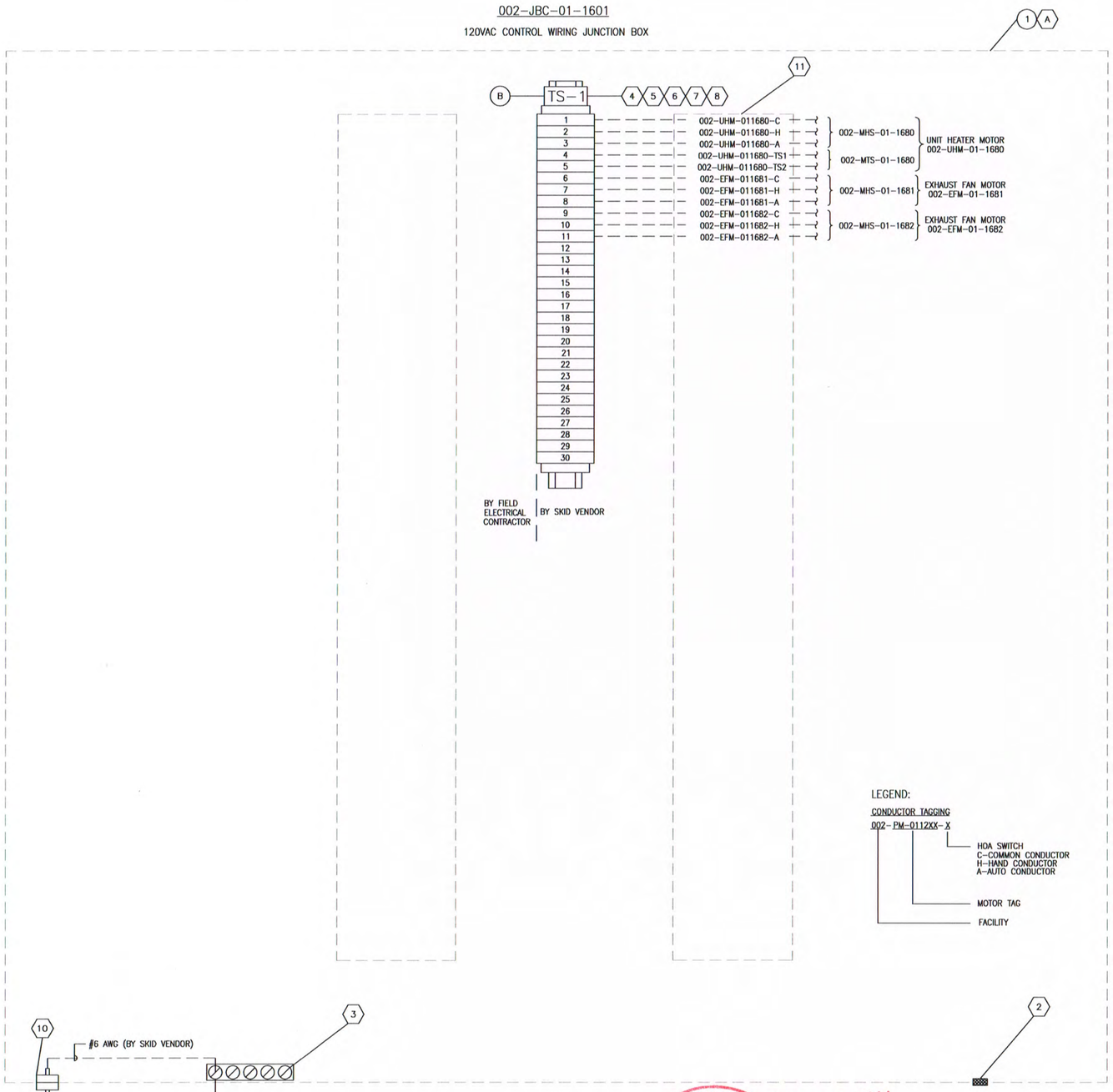

BILL OF MATERIAL

ITEM	QTY	DESCRIPTION	MODEL #
1	1	HOFFMAN FIBREGLASS, SINGLE DOOR WALL MOUNTED ENCLOSURE: - 513mmH X 413mmW X 254MMD (EXTERIOR DIMENSIONS) - c/w (1) BACKPAN	HOFFMAN A20H1610GQRLP
2	1	BREATHER/ DRAIN	CROUSE-HINDS ECD-385
3	AS REQ	GROUND BAR	-
4	AS REQ	WEIDMULLER TS32 MOUNTING RAIL WITH FOUR TST-2 SUPPORTS	0122800000, 0101700000
5	1	WEIDMULLER SCHT-5 GROUP TAG HOULDER	0292460000
6	2	WEIDMULLER EWK-1 END BRACKET	0206160000
7	1	WEIDMULLER AP SAK-10 END PLATE	0117960000
8	30	WEIDMULLER SAK-4 TERMINALS	1716240000
9	AS REQ	CORROSION INHIBITOR CID-101 (AS PER DEVON SPEC)	CROUSE-HINDS CID-101
10	1	LONG STUD SERVIT POST FOR EXTERNAL GRND (# 2AWG)	THOMAS & BETTS SP2SL
11	AS REQ	2" X 3" WIRING DUCT WITH COVER (120VAC, GREY), PANDUIT	F2X3LG6 C2LG6

NAMEPLATE ENGRAVING SCHEDULE

TAG	DESCRIPTION	SIZE	COLOR
A	002-JBC-01-1601	300mm X 50mm 20mm TEXT	BLACK ON WHITE
B	TB-1	20mm X 45mm 5mm TEXT	BLACK ON WHITE

PERMIT TO PRACTICE
SNOWDON CONSULTING INC.
PERMIT NUMBER: P-7513
The Association of Professional Engineers, Geologists and Geophysicists of Alberta

PROFESSIONAL ENGINEER R.G. SNOWDON ALBERTA
JUN 26 2014

No.	DATE	REVISION	PROJECT	DRAWN	CHECK	ENG.
1	11/29/13	RE-ISSUED FOR CONSTRUCTION		MA	RGS	RGS
0	10/21/13	ISSUED FOR CONSTRUCTION		MA	RGS	RGS
A	07/26/13	ISSUED FOR APPROVAL		MA	RGS	RGS

5B1108-02-DR-90-001 Rev 1

SNOWDON CONSULTING INC.

DEVON NEC CORP.

FERRIER CENTRAL PROCESSING FACILITY
LIQUID EXTRACTION PLANT -CARDIUM GAS SEPARATOR
CARDUM GAS SEPARATOR PACKAGE (002-PK-01-1600)
002-JBC-01-1601 - 120VAC CONTROL WIRING JUNCTION BOX

'D' SIZE SCALE: NTS | DWG. No: JBC-1601 | REV. 1

Date: 2007.03.29 04:01pm File Name: C:\1 Snowdon Consulting Inc\Electrical Tools and Templates\SCI Drawings\SCI Title Block 2.DWG By: RGS

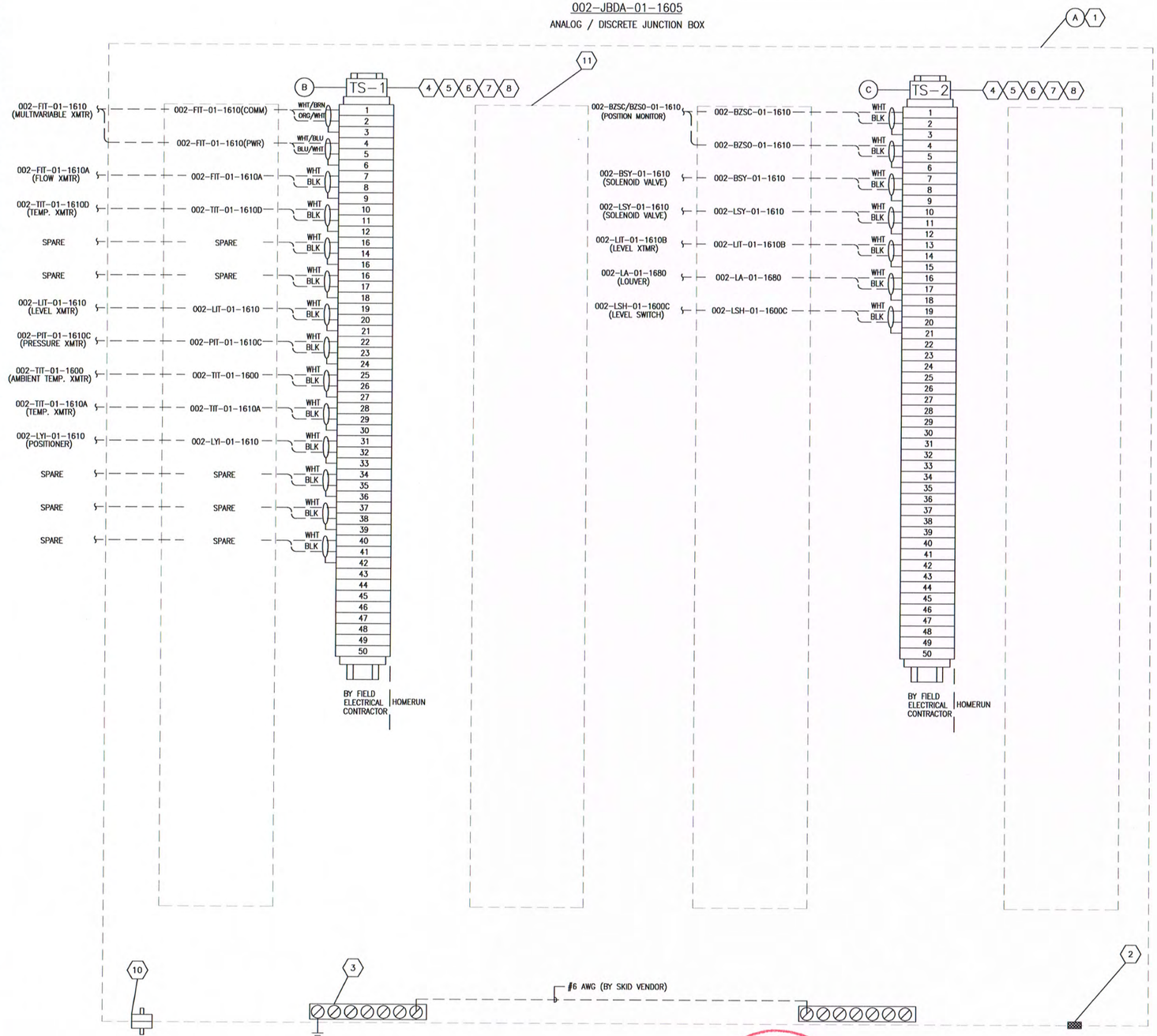

BILL OF MATERIAL

ITEM	QTY	DESCRIPTION	MODEL #
1	1	HOFFMAN FIBREGLASS, SINGLE DOOR WALL MOUNTED ENCLOSURE: – 614mmH X 614mmW X 305MMD (EXTERIOR DIMENSIONS) – c/w (1) BACKPAN	HOFFMAN A24H2412GQRLP
2	1	BREATHER/ DRAIN	CROUSE-HINDS ECD-385
3	2	BACKBURN LAY-IN LUG	THOMAS & BETTS LL306
4	AS REQ	WEIDMULLER TS32 MOUNTING RAIL WITH FOUR TST-2 SUPPORTS	0122800000, 0101700000
5	2	WEIDMULLER SCHT-5 GROUP TAG HOULDER	0292460000
6	4	WEIDMULLER EWK-1 END BRACKET	0206160000
7	2	WEIDMULLER AP SAK-10 END PLATE	0117960000
8	100	WEIDMULLER SAK-4 TERMINAL	1716240000
9	AS REQ	CORROSION INHIBITOR CID-101 (AS PER DEVON SPEC)	CROUSE-HINDS CID-101
10	1	LONG STUD SERVIT POST FOR EXTERNAL GRND (# 2AWG)	THOMAS & BETTS SP2SL
11	AS REQ	2" X 3" WIRING DUCT WITH COVER (WHITE), PANDUIT	F2X3WH6 C2WH6

NAMEPLATE ENGRAVING SCHEDULE

TAG	DESCRIPTION	SIZE	COLOR
A	002-JBDA-01-1605 ANALOG / DISCRETE JUNCTION BOX	280mm X 50mm 20mm TEXT	BLACK ON WHITE
B	TS-1	20mm X 45mm 5mm TEXT	BLACK ON WHITE
C	TS-2	20mm X 45mm 5mm TEXT	BLACK ON WHITE

PERMIT TO PRACTICE
SNOWDON CONSULTING INC.
PERMIT NUMBER: P-7513
The Association of Professional Engineers, Geologists and Geophysicists of Alberta

PROFESSIONAL ENGINEER ALBERTA R. G. SNOWDON
MAR 14 2014

5B1108-02-DR-90-002 Rev 1

No.	DATE	REVISION	PROJECT	DRAWN	CHECK	ENG.
1	03/08/14	RE-ISSUED FOR CONSTRUCTION		MA	RGS	RGS
0	10/21/13	ISSUED FOR CONSTRUCTION		MA	RGS	RGS
A	07/26/16	ISSUED FOR APPROVAL		MA	RGS	RGS

SNOWDON CONSULTING INC.

DEVON NEC CORP.

FERRIER CENTRAL PROCESSING FACILITY
LIQUID EXTRACTION PLANT – CARDIUM GAS SEPARATOR
CARDIUM GAS SEPARATOR PACKAGE (002-PK-01-1600)
JBDA-1605 – ANALOG / DISCRETE JUNCTION BOX

'D' SIZE SCALE: NTS | DWG. No: JBDA-1605 | REV. 1

Date: 2007.03.29 04:01 pm File Name: C:\1 Snowdon Consulting Inc\Electrical Tools and Templates\SCI Drawings\SCI Title Block 2.DWG By: RGS

002-JBE-01-1602

120VAC POWER WIRING JUNCTION BOX

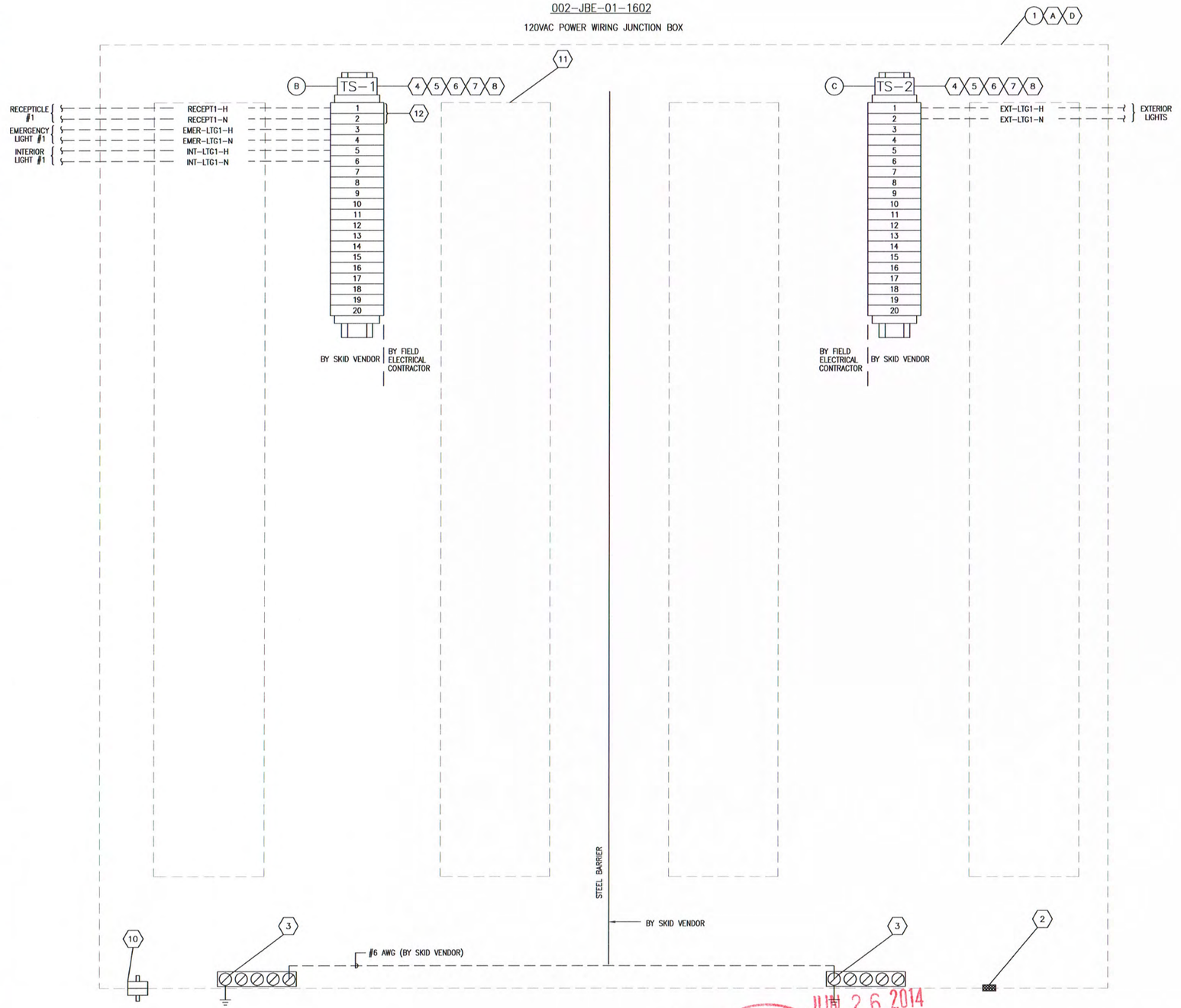

BILL OF MATERIAL

ITEM	QTY	DESCRIPTION	MODEL #
1	1	HOFFMAN FIBREGLASS, SINGLE DOOR WALL MOUNTED ENCLOSURE: – 513mmH X 514mmW X 254MMD (EXTERIOR DIMENSIONS) – c/w (1) BACKPAN	HOFFMAN A20H2010GQRLP
2	1	BREATHER/ DRAIN	CROUSE-HINDS ECD-385
3	AS REQ	GROUND BAR	–
4	AS REQ	WEIDMULLER TS32 MOUNTING RAIL WITH FOUR TST-2 SUPPORTS	0122800000, 0101700000
5	2	WEIDMULLER SCHT-5 GROUP TAG HOULDER	0292460000
6	4	WEIDMULLER EWK-1 END BRACKET	0206160000
7	2	WEIDMULLER AP SAK-10 END PLATE	0117960000
8	38	WEIDMULLER SAK-6N TERMINALS	0193260000
9	AS REQ	CORROSION INHIBITOR CID-101 (AS PER DEVON SPEC)	CROUSE-HINDS CID-101
10	1	LONG STUD SERVIT POST FOR EXTERNAL GRND (# 2AWG)	THOMAS & BETTS SP2SL
11	AS REQ	2" X 3" WIRING DUCT WITH COVER (120VAC, GREY), PANDUIT	F2X3LG6 C2LG6
12	2	WEIDMULLER SAK-10 TERMINALS	0110060000

NAMEPLATE ENGRAVING SCHEDULE

TAG	DESCRIPTION	SIZE	COLOR
A	002-JBE-01-1602	300mm X 50mm 20mm TEXT	BLACK ON WHITE
B	TB-1	20mm X 45mm 5mm TEXT	BLACK ON WHITE
C	TB-2	20mm X 45mm 5mm TEXT	BLACK ON WHITE
D	WARNING MORE THAN ONE VOLTAGE SOURCE	75mm X 150mm 12mm TEXT	WHITE ON RED

PERMIT TO PRACTICE
SNOWDON CONSULTING INC.
PERMIT NUMBER: P-7513
The Association of Professional Engineers, Geologists and Geophysicists of Alberta

PROFESSIONAL ENGINEER ALBERTA R.G. SNOWDON

JUN 26 2014

No.	DATE	REVISION	PROJECT	DRAWN	CHECK	ENG.
1	11/29/13	RE-ISSUED FOR CONSTRUCTION		MA	RGS	RGS
0	10/21/13	ISSUED FOR CONSTRUCTION		MA	RGS	RGS
A	07/26/13	ISSUED FOR APPROVAL		MA	RGS	RGS

5B1108-02-DR-90-003 Rev 1

SNOWDON CONSULTING INC.

DEVON NEC CORP.

FERRIER CENTRAL PROCESSING FACILITY
LIQUID EXTRACTION PLANT – CARDIUM GAS SEPARATOR
CARDIUM GAS SEPARATOR PACKAGE (002-PK-01-1600)
002-JBE-01-1602 – 120VAC POWER JUNCTION BOX

'D' SIZE SCALE: NTS | DWG. No: JBE-1602 | REV. 1

Date: 2007.03.29 04:01pm File Name: C:\1 Snowdon Consulting Inc\Electrical Tools and Templates\SCI Drawings\SCI Title Block 2.DWG By: RGS

002-JBF-01-1609

FIRE AND GAS JUNCTION BOX

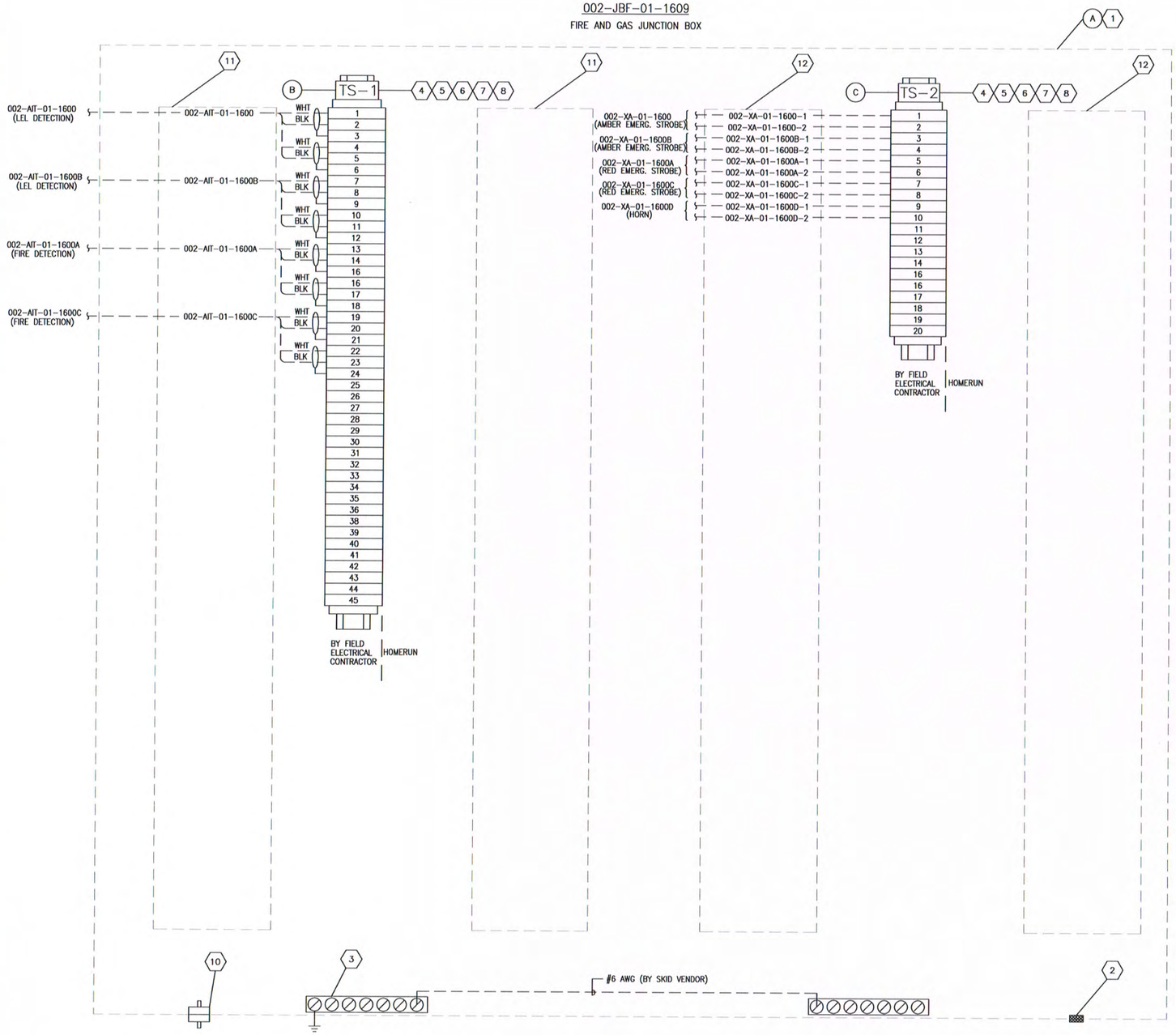

BILL OF MATERIAL

ITEM	QTY	DESCRIPTION	MODEL #
1	1	HOFFMAN FIBREGLASS, SINGLE DOOR WALL MOUNTED ENCLOSURE: – 614mmH X 614mmW X 305MMD (EXTERIOR DIMENSIONS) – c/w (1) BACKPAN	HOFFMAN A24H2412GQRLP
2	1	BREATHER/ DRAIN	CROUSE-HINDS ECD-385
3	2	BACKBURN LAY-IN LUG	THOMAS & BETTS LL306
4	AS REQ	WEIDMULLER TS32 MOUNTING RAIL WITH FOUR TST-2 SUPPORTS	0122800000, 0101700000
5	2	WEIDMULLER SCHT-5 GROUP TAG HOULDER	0292460000
6	4	WEIDMULLER EWK-1 END BRACKET	0206160000
7	2	WEIDMULLER AP SAK-10 END PLATE	0117960000
8	65	WEIDMULLER SAK-4 TERMINAL	1716240000
9	AS REQ	CORROSION INHIBITOR CID-101 (AS PER DEVON SPEC)	CROUSE-HINDS CID-101
10	1	LONG STUD SERVIT POST FOR EXTERNAL GRND (# 2AWG)	THOMAS & BETTS SP2SL
11	AS REQ	2" X 3" WIRING DUCT WITH COVER (24VDC, WHITE), PANDUIT	F2X3WH6 C2WH6
12	AS REQ	2" X 3" WIRING DUCT WITH COVER (120VAC, GREY), PANDUIT	F2X3LG6 C2LG6

NAMEPLATE ENGRAVING SCHEDULE

TAG	DESCRIPTION	SIZE	COLOR
A	002-JBF-01-1609 FIRE AND GAS JUNCTION BOX	280mm X 50mm 20mm TEXT	BLACK ON WHITE
B	TS-1 (24VDC)	20mm X 45mm 5mm TEXT	BLACK ON WHITE
C	TS-2 (120VAC)	20mm X 45mm 5mm TEXT	BLACK ON WHITE
D	SEE DETAIL	160mm X 100mm 5mm TEXT	WHITE ON RED

D

CAUTION

THIS JUNCTION BOX IS SUPPLIED FROM MORE THAN ONE SOURCE OF VOLTAGE

JUNCTION BOX SUPPLY VOLTAGE
120VAC UPS POWER
24VDC UPS POWER

PERMIT TO PRACTICE
SNOWDON CONSULTING INC.
PERMIT NUMBER: P-7513
The Association of Professional Engineers, Geologists and Geophysicists of Alberta

PROFESSIONAL ENGINEER ALBERTA R.G. SNOWDON MAR 14 2014

No.	DATE	REVISION	PROJECT	DRAWN	CHECK	ENG.
1	03/08/14	RE-ISSUED FOR CONSTRUCTION		MA	RGS	RGS
0	10/21/13	ISSUED FOR CONSTRUCTION		MA	RGS	RGS
A	06/26/13	ISSUED FOR APPROVAL		MA	RGS	RGS

5B1108-02-DR-90-004 Rev 1

SNOWDON CONSULTING INC.

DEVON NEC CORP.

FERRIER CENTRAL PROCESSING FACILITY
LIQUID EXTRACTION PLANT – CARDIUM GAS SEPARATOR
CARDIUM GAS SEPARATOR PACKAGE (002-PK-01-1600)
JBF-1609 – FIRE AND GAS JUNCTION BOX

'D' SIZE SCALE: NTS | DWG. No: JBF-1609 | REV. 1

CONDUIT OR CABLE TAG	APPLICATION	LOAD		ROUTING			CONDUIT / CABLE		CONDUCTORS					CONDUCTOR SCHEDULE	COMMENT
		KW	VOLTS	FROM	VIA (CABLE TRAY ROUTING)	TO	TYPE	SIZE	QTY.	SIZE	VOLTS	INSUL.	SPARE		
P-INT LIGHTS	POWER		120VAC	CARDIUM GAS SEPARATOR PKG - 002-JBE-01-1602		CARDIUM GAS SEPARATOR PKG - INTERIOR LIGHTS	TECK		2C	12	600	XLPE	0		
P-EXT LIGHTS	POWER		120VAC	CARDIUM GAS SEPARATOR PKG - 002-JBE-01-1602		CARDIUM GAS SEPARATOR PKG - EXTERIOR LIGHTS	TECK		2C	12	600	XLPE	0		
P-RECEPTACLE	POWER		120VAC	CARDIUM GAS SEPARATOR PKG - 002-JBE-01-1602		CARDIUM GAS SEPARATOR PKG - RECEPTACLES	TECK		2C	12	600	XLPE	0		
P-EMERGENCY LIGHTS	POWER		120VAC	CARDIUM GAS SEPARATOR PKG - 002-JBE-01-1602		CARDIUM GAS SEPARATOR PKG - EMERGENCY LIGHTS	TECK		2C	12	600	XLPE	0		
C-EX FAN-1681	CONTROL		120VAC	CARDIUM GAS SEPARATOR PKG - 002-JBC-01-1601		CARDIUM GAS SEPARATOR PKG - EXHAUST FAN - 1681	TECK		3C	12	600	XLPE	0		
C-EX FAN-1682	CONTROL		120VAC	CARDIUM GAS SEPARATOR PKG - 002-JBC-01-1601		CARDIUM GAS SEPARATOR PKG - EXHAUST FAN - 1682	TECK		3C	12	600	XLPE	0		
C-HEATER-1680	CONTROL		120VAC	CARDIUM GAS SEPARATOR PKG - 002-JBC-01-1601		CARDIUM GAS SEPARATOR PKG - HEATER - 1680	TECK		3C	10	600	XLPE	0		
C-HEATERTS-1680	CONTROL		120VAC	CARDIUM GAS SEPARATOR PKG - 002-JBC-01-1601		CARDIUM GAS SEPARATOR PKG - HEATER TEMP SWITCH	TECK		2C	12	600	XLPE	0		
002-AIT-01-1600	CONTROL		24VDC	CARDIUM GAS SEPARATOR PKG - 002-JBF-01-1609		CARDIUM GAS SEPARATOR PKG - LEL DETECTION	ACIC		2PR	16	600	XLPE	0		
002-AIT-01-1600B	CONTROL		24VDC	CARDIUM GAS SEPARATOR PKG - 002-JBF-01-1609		CARDIUM GAS SEPARATOR PKG - LEL DETECTION	ACIC		2PR	16	600	XLPE	0		
002-AIT-01-1600A	CONTROL		24VDC	CARDIUM GAS SEPARATOR PKG - 002-JBF-01-1609		CARDIUM GAS SEPARATOR PKG - FIRE DETECTION	ACIC		2PR	16	600	XLPE	0		
002-AIT-01-1600C	CONTROL		24VDC	CARDIUM GAS SEPARATOR PKG - 002-JBF-01-1609		CARDIUM GAS SEPARATOR PKG - FIRE DETECTION	ACIC		2PR	16	600	XLPE	0		
002-XA-01-1600/A	CONTROL		120VAC	CARDIUM GAS SEPARATOR PKG - 002-JBF-01-1609		CARDIUM GAS SEPARATOR PKG - AMBER/RED EMERG. STROBES	TECK		4C	14	600	XLPE	0		
002-XA-01-1600B/C	CONTROL		120VAC	CARDIUM GAS SEPARATOR PKG - 002-JBF-01-1609		CARDIUM GAS SEPARATOR PKG - AMBER/RED EMERG. STROBES	TECK		4C	14	600	XLPE	0		
002-XA-01-1600D	CONTROL		120VAC	CARDIUM GAS SEPARATOR PKG - 002-JBF-01-1609		CARDIUM GAS SEPARATOR PKG - HORN	TECK		2C	14	600	XLPE	0		
002-XA-01-1600D	CONTROL		120VAC												
002-FIT-01-1610	CONTROL		24VDC	CARDIUM GAS SEPARATOR PKG - 002-JBDA-01-1605		CARDIUM GAS SEPARATOR PKG - MULTIVARIABLE TRANSMITTER	ACIC		2PR	22	300	PVC	0		RS-485 CABLE, BELDEN 123107A OR EQUAL
002-FIT-01-1610A	CONTROL		24VDC	CARDIUM GAS SEPARATOR PKG - 002-JBDA-01-1605		CARDIUM GAS SEPARATOR PKG - FLOW TRANSMITTER	ACIC		1PR	18	600	XLPE	0		
002-LIT-01-1610	CONTROL		24VDC	CARDIUM GAS SEPARATOR PKG - 002-JBDA-01-1605		CARDIUM GAS SEPARATOR PKG - FLOW TRANSMITTER	ACIC		1PR	18	600	XLPE	0		
002-PIT-01-1610C	CONTROL		24VDC	CARDIUM GAS SEPARATOR PKG - 002-JBDA-01-1605		CARDIUM GAS SEPARATOR PKG - PRESSURE TRANSMITTER	ACIC		1PR	18	600	XLPE	0		
002-TIT-01-1600	CONTROL		24VDC	CARDIUM GAS SEPARATOR PKG - 002-JBDA-01-1605		CARDIUM GAS SEPARATOR PKG - TEMPERATURE TRANSMITTER	ACIC		1PR	18	600	XLPE	0		
002-TIT-01-1610A	CONTROL		24VDC	CARDIUM GAS SEPARATOR PKG - 002-JBDA-01-1605		CARDIUM GAS SEPARATOR PKG - TEMPERATURE TRANSMITTER	ACIC		1PR	18	600	XLPE	0		
002-TIT-01-1610D	CONTROL		24VDC	CARDIUM GAS SEPARATOR PKG - 002-JBDA-01-1605		CARDIUM GAS SEPARATOR PKG - TEMPERATURE TRANSMITTER	ACIC		1PR	18	600	XLPE	0		
002-LYI-01-1610	CONTROL		24VDC	CARDIUM GAS SEPARATOR PKG - 002-JBDA-01-1605		CARDIUM GAS SEPARATOR PKG - POSITIONER	ACIC		1PR	18	600	XLPE	0		
002-BZSC/BZSO-01-1610	CONTROL		24VDC	CARDIUM GAS SEPARATOR PKG - 002-JBDA-01-1605		CARDIUM GAS SEPARATOR PKG - POSITION MONITOR NC/NO	ACIC		2PR	16	600	XLPE	0		
									1PR	18	600	XLPE	0		
002-BSY-01-1610	CONTROL		24VDC	CARDIUM GAS SEPARATOR PKG - 002-JBDA-01-1605		CARDIUM GAS SEPARATOR PKG - SOLENOID VALVE	ACIC		1PR	18	600	XLPE	0		
002-LSY-01-1610	CONTROL		24VDC	CARDIUM GAS SEPARATOR PKG - 002-JBDA-01-1605		CARDIUM GAS SEPARATOR PKG - SOLENOID VALVE	ACIC		1PR	18	600	XLPE	0		
002-LIT-01-1610B	CONTROL		24VDC	CARDIUM GAS SEPARATOR PKG - 002-JBDA-01-1605		CARDIUM GAS SEPARATOR PKG - LEVEL TRANSMITTER	ACIC		1PR	18	600	XLPE	0		
002-PIT-01-1610A	CONTROL		24VDC	CARDIUM GAS SEPARATOR PKG - 002-JBDA-01-1605		CARDIUM GAS SEPARATOR PKG - PRESSURE TRANSMITTER	ACIC		1PR	18	600	XLPE	0		
002-LA-01-1680	CONTROL		24VDC	CARDIUM GAS SEPARATOR PKG - 002-JBDA-01-1605		CARDIUM GAS SEPARATOR PKG - LOUVER	ACIC		1PR	18	600	XLPE	0		
002-LSH-01-1600C	CONTROL		24VDC	CARDIUM GAS SEPARATOR PKG - 002-JBDA-01-1605		CARDIUM GAS SEPARATOR PKG - LEVEL SWITCH	ACIC		1PR	18	600	XLPE	0		

LEGEND:

TC - TRAY CABLE
ACIC - ARMOURED CONTROL & INSTRUMENT CABLE

NOTES:

PERMIT TO PRACTICE
SNOWDON CONSULTING INC.
PERMIT NUMBER: P-7513
The Association of Professional Engineers, Geologists and Geophysicists of Alberta

PROFESSIONAL ENGINEER ALBERTA R.G. SNOWDON MAR 14 2014

No.	DATE	REVISION	PROJECT	DRAWN	CHECK	ENG.
1	03/08/14	RE-ISSUED FOR CONSTRUCTION		MA	RGS	RGS
0	10/21/13	ISSUED FOR CONSTRUCTION		MA	RGS	RGS
A	07/26/16	ISSUED FOR APPROVAL		MA	RGS	RGS

5B1108-02-DR-90-005 Rev 1

SNOWDON CONSULTING INC.

DEVON NEC CORP.

FERRIER CENTRAL PROCESSING FACILITY
LIQUID EXTRACTION PLANT - CARDIUM GAS SEPARATOR
CARDIUM GAS SEPARATOR PACKAGE (002-PK-01-1600)
CABLE SCHEDULE

'D' SIZE SCALE: NTS | DWG. No: SCD-1600 | REV. 1

PLANT NORTH

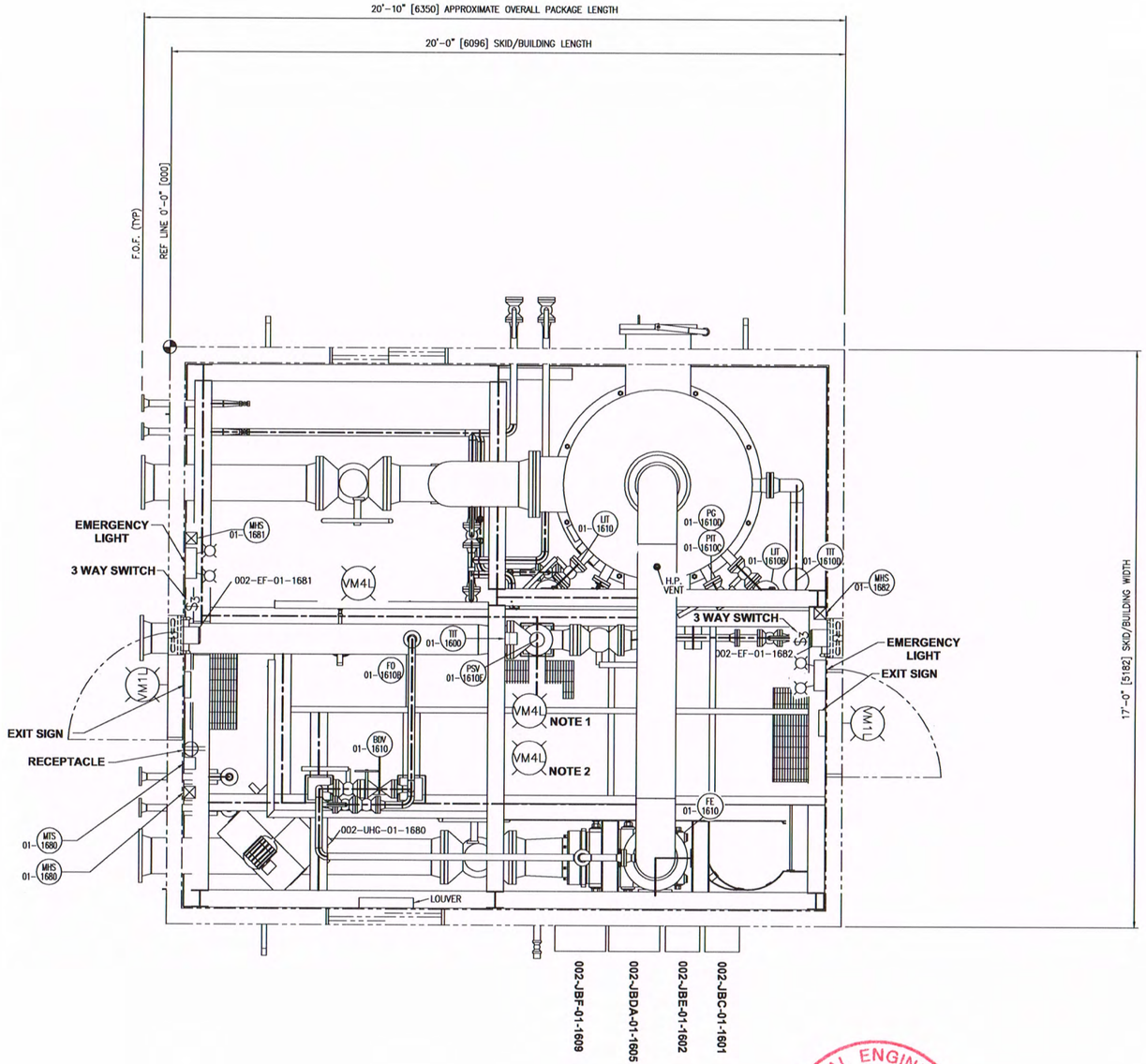

PLAN VIEW
SCALE 1/2"=1'-0"

NOTES:

1) INSTALL LIGHT ABOVE CATWALK.
2) INSTALL LIGHT BELOW CATWALK.

PROFESSIONAL ENGINEER R. G. SNOWDON ALBERTA
MAR 14 2014

5B1108-02-DR-90-006 Rev 1

NO.	REVISION	BY	CHK	DATE
1	RE-ISSUED FOR CONSTRUCTION	MA		03/08/14
0	ISSUED FOR CONSTRUCTION	MA		10/21/13
A	ISSUED FOR APPROVAL	MA		10/09/13

CUSTOMER REFERENCE: –

5Blue Process Equipment Inc.
www.5Blue.com

CUSTOMER: DEVON NEC CORPORATION
JOB NO.: 5B1108-30
PROJECT: FERRIER CENTRAL OIL BATTERY – LIQUID EXTRACTION PLANT (LEP)
LOCATION: LSD 11-02-039-08 W5M
TITLE: CARDIUM INLET SEPARATOR PACKAGE (002-PK-01-1600)
GENERAL ARRANGEMENT – POWER AND CONTROL LYOUT

DRAWN	CHK	APP	SCALE	DATE	DWG NO	SHT TTL
RR			1/2"=1'-0"	20/05/13	LAY1600-01	1

PLANT NORTH

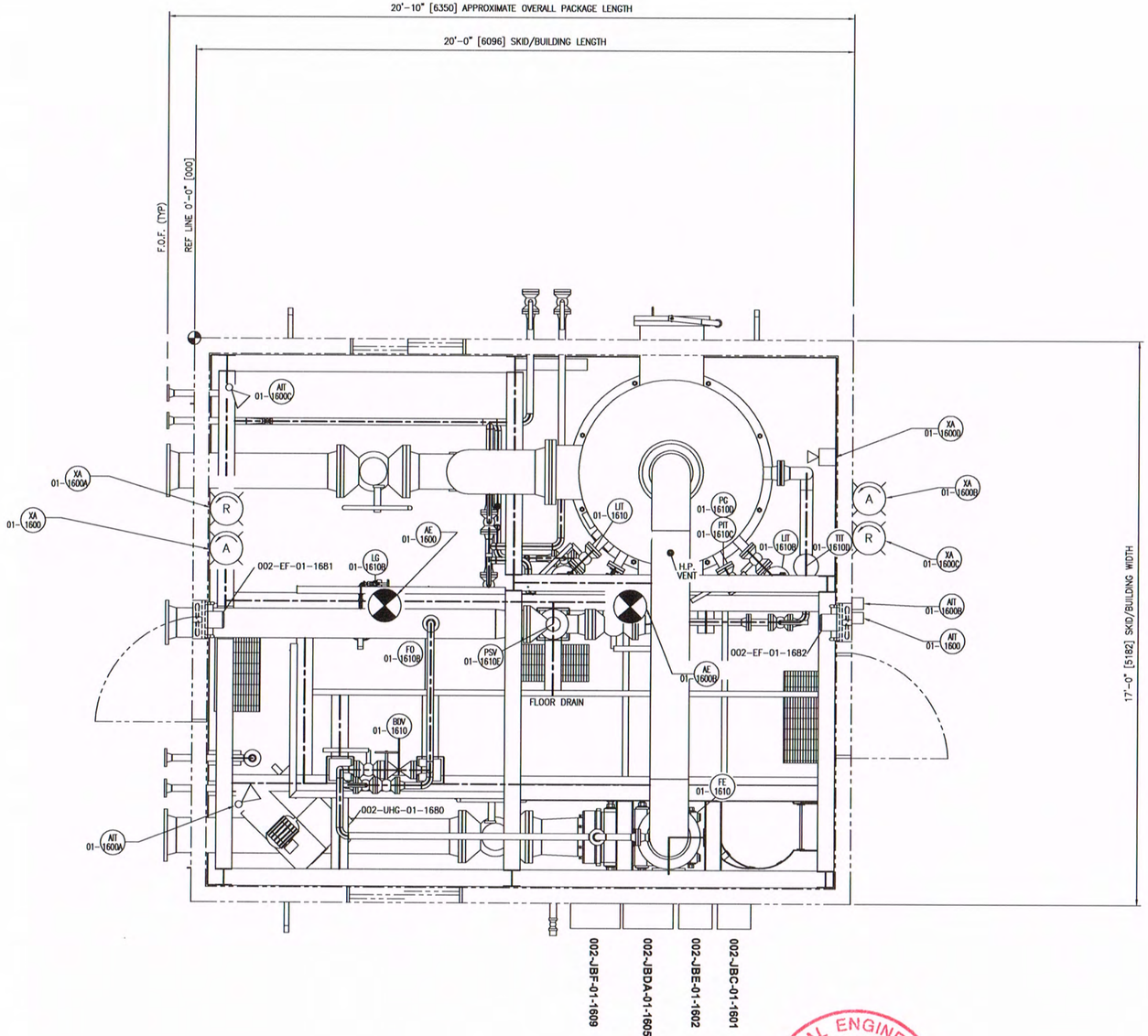

PLAN VIEW
SCALE 1/2"=1'-0"

NOTES:

PROFESSIONAL ENGINEER ALBERTA R. G. SNOWDON
MAR 1 4 2014

5B1108-02-DR-90-007 Rev 1

NO.	REVISION	BY	CHK	DATE
1	RE-ISSUED FOR CONSTRUCTION	MA		03/08/14
0	ISSUED FOR CONSTRUCTION	MA		10/21/13
A	ISSUED FOR APPROVAL	MA		10/09/13

CUSTOMER REFERENCE: –

5Blue Process Equipment Inc.
www.5Blue.com

CUSTOMER: DEVON NEC CORPORATION
JOB NO. 5B1108-30

PROJECT:
FERRIER CENTRAL OIL BATTERY – LIQUID EXTRACTION PLANT (LEP)
LOCATION: LSD 11-02-039-08 W5M

TITLE:
CARDIUM INLET SEPARATOR PACKAGE (002-PK-01-1600)
GENERAL ARRANGEMENT – INSTRUMENT LAYOUT

DRAWN	CHK	APP	SCALE	DATE	DWG NO	SHT TTL
RR			1/2"=1'-0"	20/05/13	LAY1600-02	1

PLANT NORTH

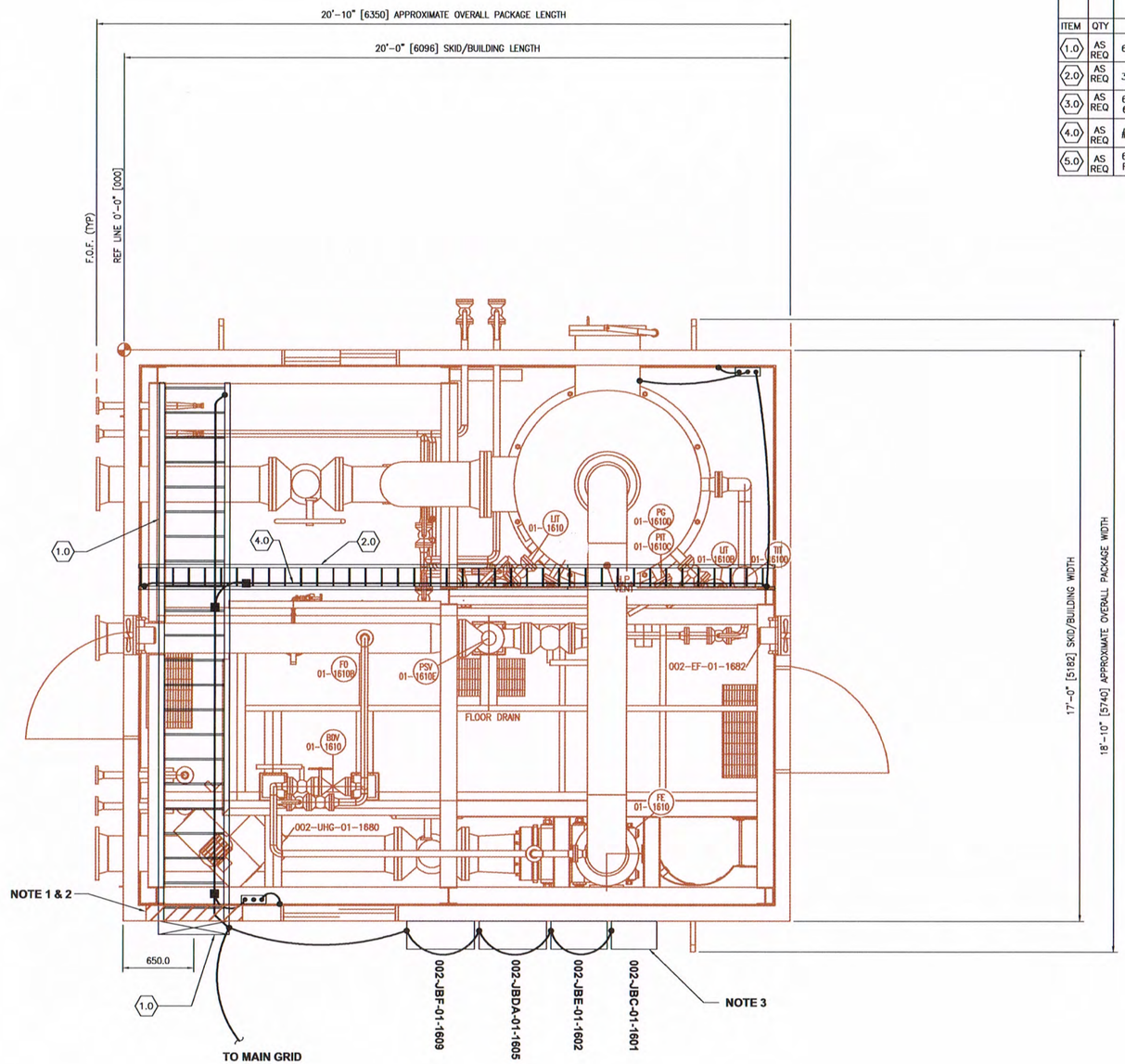

PLAN VIEW
SCALE 1/2"=1'-0"

BILL OF MATERIAL

ITEM	QTY	DESCRIPTION	MODEL #
1.0	AS REQ	600mm ALUMINUM CABLE TRAY, CLASS E STRAIGHT 225 RUNG SPAN	T&B AH3624L09-6
2.0	AS REQ	300mm ALUMINUM CABLE TRAY, CLASS E STRAIGHT 225 RUNG SPAN	T&B AH3612L09-6
3.0	AS REQ	600mm ALUMINUM CABLE TRAY, CLASS E ELBOW HORIZONTAL 90° 600mm RADIUS, 225 RUNG	T&B AUF624LHB9024
4.0	AS REQ	#2/0 AWG GROUND WIRE – GREEN	
5.0	AS REQ	600mm ALUMINUM CABLE TRAY, CLASS E HORIZONTAL TEE 600mm RADIUS, 225 RUNG	T&B AHF612LHT24

NOTES:

1- CABLE TRAY OPENING IN THE WALL SHALL BE 884mmW x 360mmH.

2- B.O CABLE TRAY WALL OPENING SHALL BE 3030mm ABOVE REF. ELEVATION LINE (0.0).

3- TOP OF JB's SHALL BE 1175mm ABOVE REF. ELEVATION LINE.

PROFESSIONAL ENGINEER ALBERTA R. G. SNOWDON JUN 26 2014

5B1108-02-DR-90-008 Rev 1

NO.	REVISION	BY	CHK	DATE
1	RE-ISSUED FOR CONSTRUCTION	MA		11/29/13
0	ISSUED FOR CONSTRUCTION	MA		10/21/13
A	ISSUED FOR APPROVAL	MA		10/09/13

CUSTOMER REFERENCE: –

5Blue Process Equipment Inc.
www.5Blue.com

CUSTOMER: DEVON NEC CORPORATION
JOB NO.: 5B1108-30

PROJECT:
FERRIER CENTRAL OIL BATTERY – LIQUID EXTRACTION PLANT (LEP)
LOCATION: LSD 11-02-039-08 W5M

TITLE:
CARDIUM INLET SEPARATOR PACKAGE (002-PK-01-1600)
GENERAL ARRANGEMENT – CABLE TRAY AND GROUNDING LAYOUT

DRAWN	CHK	APP	SCALE	DATE	DWG NO	SHT TTL
RR			1/2"=1'-0"	20/05/13	LAY1600-03	1

D24 Equipment Wiring Diagram

2303-8th Street, Nisku Alberta, T9E-7Z3 CANADA

This section does not apply



D30 Electrical Bills of Material

2303-8th Street, Nisku Alberta, T9E-7Z3 CANADA



See section D23



E. INSTRUMENTATION

2303-8th Street, Nisku Alberta, T9E-7Z3 CANADA

E5 Wiring Diagrams

2303-8th Street, Nisku Alberta, T9E-7Z3 CANADA

This section does not apply



E6 ISA Datasheet for each Item Including Manufacturer and Model No.

2303-8th Street, Nisku Alberta, T9E-7Z3 CANADA

GENERAL	1	P&ID Number	Tag Number	5B1108-02-DR-00-001	002-AIT -01-1600
	2	Service		CARD GAS SEP PKG	
	3	Application			
	4	Line Number	Equipment Number	---	002-PK-01-1600
	5	Area Classification	Location	Class 1, Division 2	FIELD (INSIDE)
	6	Ambient Temperature Range		-40°F to 167°F (-40°C to 75°C)	
	7				
	8				
	9				
PROCESS CONDITIONS	10	Gas Components		LEL Gas Detector	
	11	Mole Weight or Specific Gravity		0.77	
	12	Distance From Source		TBD	
	13	Humidity		5% to 100% RH, non-condensing	
	14	Vibration			
	15	Location		LSD: 11-02-039-08 W5M	
	16				
	17				
SENSOR	18	Model		10001-1	
	19	Enclosure		Yes	
	20	Mounting		Wall	
	21	Sensor Type		Continuous diffusion, low temperature catalytic bead	
	22	Detection Range		0-100% LEL	
	23	Calibration Gas		Methane	
	24	Accuracy		±3% LEL up to 50% LEL / ±5% LEL ³ 51% LEL	
	25				
MONITOR/ TRANSMITTER	26	Model		S4000CH-1-0-01-1	
	27	Enclosure		Marine aluminum	
	28	Mounting		Wall	
	29	Type		Explosion Proof	
	30	Transmittance Integral With Sensor		No Remote	
	31	Response Time		T50 <10 s T90 <30 s with 100% LEL methane applied	
	32	Calibration		Fully automatic calibration	
	33	Analog Output		4-20 mA	
	34	Power supply		24 VDC nominal, 20 to 36 VDC 250 mA max.	
	35	Local Indication		Yes	
	36	Zero Drift		Less than 5% of full scale per year	
	37	Alarm Relay		Yes	
	38	Calibrated Range		0 TO 100%	
	39				
OPTIONS	40	Calibration Kit			
	41	Calibration Magnet		Yes	
	42	Dust Guard			
	43	Splash Guard			
	44	Separation Kit			
	45	Junction Box			
	46				
PURCHASE	47	Manufacturer		Monitor	
	48	Model		S4000CH-1-0-01-1	
	49	Purchase Order Number			
	50	Price			
	51	Serial Number			

Notes: See Notes Page

No.	By	Date	Revision

INSTRUMENT SPECIFICATION
Gas Detector
Code:622

Instr. Chk	Process Chk	Appr.

Sheet : of :

Dwg. No.: FER-002.1102039085-J-DSH-AIT-01-1600-01 Rev.:

Project: CONVENTIONAL RED DEER / FERRIER - 11-02 GATHERING SYSTEM / 002 - LIQUID EXTRACTION PLANT - SHALLOW CUT

GENERAL	1	P&ID Number	Tag Number	5B1108-02-DR-00-001	002-AIT -01-1600
	2	Service		CARD GAS SEP PKG	

Notes:

				INSTRUMENT SPECIFICATION Gas Detector Code:622		
				Instr. Chk	Process Chk	Appr.
						Sheet of
No.	By	Date	Revision	Dwg. No.: FER-002.1102039085-J-DSH-AIT-01-1600-01		Rev.:

Project: CONVENTIONAL RED DEER / FERRIER - 11-02 GATHERING SYST / 002 - LIQUID EXTRACTION PLANT

GENERAL	1	P&ID Number	Tag Number	5B1108-02-DR-00-001	002-AIT -01-1600A	
	2	Service		CARD GAS SEP PKG		
	3	Application				
	4	Line Number	Equipment Number	---	002-PK-01-1600	
	5	Area Classification	Location	Class 1, Division 2	FIELD (INSIDE)	
	6	Ambient Temperature Range		-40°F to 167°F (-40°C to 75°C)		
	7					
	8					
	9					
PROCESS CONDITIONS	10	Gas Components		UVIR Flame Detector		
	11	Mole Weight or Specific Gravity		0.77		
	12	Distance From Source		65 ft.		
	13	Humidity		0 to 95%		
	14	Vibration		N/A		
	15	Location		LSD: 11-02-039-08 W5M		
	16					
	17					
DETECTOR	18	Model		X5200		
	19	Enclosure		Copper-free aluminum		
	20	Mounting		Wall		
	21	Sensor Type		90 degree cone of vision with the highest sensitivity lying		
	22	Detection Range		18 to 30 VDC		
	23	Field of Vision				
	24	Sensitivity				
	25	UV Pass Band				
	26	IR Center Wavelength				
MONITOR/ TRANSMITTER	27	Model				
	28	Enclosure		NEMA/Type 4X		
	29	Mounting		Wall		
	30	Type		Explosion Proof		
	31	Typical Response Time		5 second		
	32	Minimum Response Time				
	33	Calibration		Methane		
	34	Analog Output		4 to 20 mA		
	35	Power Supply		24 VDC		
	36	Local Indication		Tricolor LED		
	37	Alarm Relay		Yes		
	38	Calibrated Range		TO		
	39					
OPTIONS	40	Calibration/Test Kit				
	41	Optical Air Guard				
	42	Swivel Elbow		Yes		
	43	Mounting Bracket		Yes		
	44					
	45					
	46					
PURCHASE	47	Manufacturer		Det-tronics		
	48	Model		X5200		
	49	Purchase Order Number				
	50	Price				
	51	Serial Number		12DEC028851		

Notes: See Notes Page

No.	By	Date	Revision

INSTRUMENT SPECIFICATION
Fire Detector
Code:621

Instr. Chk	Process Chk	Appr.

Sheet : of :

Dwg. No.: FER-002.1102039085-J-DSH-AIT-01-1600A-01 Rev.:

Project: CONVENTIONAL RED DEER / FERRIER - 11-02 GATHERING SYSTEM / 002 - LIQUID EXTRACTION PLANT - SHALLOW CUT

GENERAL	1	P&ID Number	Tag Number	5B1108-02-DR-00-001	002-AIT -01-1600A
	2	Service		CARD GAS SEP PKG	

Notes:

				INSTRUMENT SPECIFICATION Fire Detector Code:621		
				Instr. Chk	Process Chk	Appr.
No.	By	Date	Revision	Dwg. No.: FER-002.1102039085-J-DSH-AIT-01-1600A-01		Rev.:

Sheet : of :

Project: CONVENTIONAL RED DEER / FERRIER - 11-02 GATHERING SYST / 002 - LIQUID EXTRACTION PLANT

GENERAL	1	P&ID Number	Tag Number	5B1108-02-DR-00-001	002-AIT -01-1600B
	2	Service		CARD GAS SEP PKG	
	3	Application			
	4	Line Number	Equipment Number	---	002-PK-01-1600
	5	Area Classification	Location	Class 1, Division 2	FIELD (INSIDE)
	6	Ambient Temperature Range		-40°F to 167°F (-40°C to 75°C)	
	7				
	8				
	9				
PROCESS CONDITIONS	10	Gas Components		LEL Gas Detector	
	11	Mole Weight or Specific Gravity		0.77	
	12	Distance From Source		TBD	
	13	Humidity		5% to 100% RH, non-condensing	
	14	Vibration			
	15	Location		LSD: 11-02-039-08 W5M	
	16				
	17				
SENSOR	18	Model		10001-1	
	19	Enclosure		Yes	
	20	Mounting		Wall	
	21	Sensor Type		Continuous diffusion, low temperature catalytic bead	
	22	Detection Range		0-100% LEL	
	23	Calibration Gas		Methane	
	24	Accuracy		±3% LEL up to 50% LEL / ±5% LEL ³ 51% LEL	
	25				
MONITOR/ TRANSMITTER	26	Model		S4000CH-1-0-01-1	
	27	Enclosure		Marine aluminum	
	28	Mounting		Wall	
	29	Type		Explosion Proof	
	30	Transmittance Integral With Sensor		No Remote	
	31	Response Time		T50 <10 s T90 <30 s with 100% LEL methane applied	
	32	Calibration		Fully automatic calibration	
	33	Analog Output		4-20 mA	
	34	Power supply		24 VDC nominal, 20 to 36 VDC 250 mA max.	
	35	Local Indication		Yes	
	36	Zero Drift		Less than 5% of full scale per year	
	37	Alarm Relay		Yes	
	38	Calibrated Range		0 TO 100%	
	39				
OPTIONS	40	Calibration Kit			
	41	Calibration Magnet		Yes	
	42	Dust Guard			
	43	Splash Guard			
	44	Separation Kit			
	45	Junction Box			
	46				
PURCHASE	47	Manufacturer		Monitor	
	48	Model		S4000CH-1-0-01-1	
	49	Purchase Order Number			
	50	Price			
	51	Serial Number			

Notes: See Notes Page

No.	By	Date	Revision

INSTRUMENT SPECIFICATION
Gas Detector
Code:622

Instr. Chk	Process Chk	Appr.

Sheet : of :

Dwg. No.: FER-002.1102039085-J-DSH-AIT-01-1600B-01 Rev.:

Project: CONVENTIONAL RED DEER / FERRIER - 11-02 GATHERING SYSTEM / 002 - LIQUID EXTRACTION PLANT - SHALLOW CUT

GENERAL	1	P&ID Number	Tag Number	5B1108-02-DR-00-001	002-AIT -01-1600B
	2	Service		CARD GAS SEP PKG	

Notes:

				INSTRUMENT SPECIFICATION Gas Detector Code:622		
				Instr. Chk	Process Chk	Appr.
						Sheet of
No.	By	Date	Revision	Dwg. No.: FER-002.1102039085-J-DSH-AIT-01-1600B-01		Rev.:

Project: CONVENTIONAL RED DEER / FERRIER - 11-02 GATHERING SYST / 002 - LIQUID EXTRACTION PLANT

GENERAL	1	P&ID Number	Tag Number	5B1108-02-DR-00-001	002-AIT -01-1600C
	2	Service		CARD GAS SEP PKG	
	3	Application			
	4	Line Number	Equipment Number	---	002-PK-01-1600
	5	Area Classification	Location	Class 1, Division 2	FIELD (INSIDE)
	6	Ambient Temperature Range		-40°F to 167°F (-40°C to 75°C)	
	7				
	8				
	9				
PROCESS CONDITIONS	10	Gas Components		UVIR Flame Detector	
	11	Mole Weight or Specific Gravity		0.77	
	12	Distance From Source		65 ft.	
	13	Humidity		0 to 95%	
	14	Vibration		N/A	
	15	Location		LSD: 11-02-039-08 W5M	
	16				
	17				
DETECTOR	18	Model		X5200	
	19	Enclosure		Copper-free aluminum	
	20	Mounting		Wall	
	21	Sensor Type		90 degree cone of vision with the highest sensitivity lying	
	22	Detection Range		18 to 30 VDC	
	23	Field of Vision			
	24	Sensitivity			
	25	UV Pass Band			
	26	IR Center Wavelength			
MONITOR/ TRANSMITTER	27	Model			
	28	Enclosure		NEMA/Type 4X	
	29	Mounting		Wall	
	30	Type		Explosion Proof	
	31	Typical Response Time		5 second	
	32	Minimum Response Time			
	33	Calibration		Methane	
	34	Analog Output		4 to 20 mA	
	35	Power Supply		24 VDC	
	36	Local Indication		Tricolor LED	
	37	Alarm Relay		Yes	
	38	Calibrated Range		TO	
	39				
OPTIONS	40	Calibration/Test Kit			
	41	Optical Air Guard			
	42	Swivel Elbow		Yes	
	43	Mounting Bracket		Yes	
	44				
	45				
	46				
PURCHASE	47	Manufacturer		Det-tronics	
	48	Model		X5200	
	49	Purchase Order Number			
	50	Price			
	51	Serial Number		12DEC028851	

Notes: See Notes Page

No.	By	Date	Revision

INSTRUMENT SPECIFICATION
Fire Detector
Code:621

Instr. Chk	Process Chk	Appr.

Sheet : of :

Dwg. No.: FER-002.1102039085-J-DSH-AIT-01-1600C-01 Rev.:

Project: CONVENTIONAL RED DEER / FERRIER - 11-02 GATHERING SYSTEM / 002 - LIQUID EXTRACTION PLANT - SHALLOW CUT

GENERAL	1	P&ID Number	Tag Number	5B1108-02-DR-00-001	002-AIT -01-1600C
	2	Service		CARD GAS SEP PKG	

Notes:

				INSTRUMENT SPECIFICATION Fire Detector Code:621		
				Instr. Chk	Process Chk	Appr.
No.	By	Date	Revision	Dwg. No.: FER-002.1102039085-J-DSH-AIT-01-1600C-01		Rev.:

Sheet : of :

Project: CONVENTIONAL RED DEER / FERRIER - 11-02 GATHERING SYST / 002 - LIQUID EXTRACTION PLANT

GENERAL	1	P&ID Number	Tag Number		5B1108-02-DR-00-001		002-BDV -01-1610		
	2	Service			V-01-1610 HP FLR TO HP FLR HDR				
	3	Line Number			60-PG-A11-01340				
	4	Area Classification	Location		Class 1, Division 2		FIELD (INSIDE)		
	5	Ambient Temperature Range			-40 to 175 °F (-40 to 80 °C)				
	6	Allowable Sound Pressure Level dBA							
	7	Available Air Supply Pressure:	Min.	Max.	550 kPa		910 kPa		
	8	Signal Failure Position	Air Failure Position		Open				
	9	Flange Face to Face	Actuator Clearance Height						
PIPE LINE	10	Line Size and Schedule	Inlet	Outlet	2 in 80				
	11	Pipe Material	Pipe Insulation		SA-106N				
PROCESS CONDITIONS	12	Required Open and Closing Times							
	13	Process Fluid	Upstream Condition		HC		Gas/Vapor		
	14	Max Differential Pressure At Shut Off			kPa				
	15	Design Pressure	Design Temperature		1379 kPa-g		-29 °C		
	16	Critical Pressure	Critical Temperature				°C		
	17				Units	@ Max Flow	@ Norm Flow	@ Min Flow	
	18	Flow Rate			Sm³/d	1415850		353.96	
	19	Inlet Pressure			kPa-g	800	700	600	
	20	Pressure Drop			kPa				
	21	Inlet Temperature			°C	53	43	23	
	22	Inlet Density / Specific Gravity / Molecular Mass			SG		0.770		
	23	Inlet Compressibility Factor			—				
	24	Inlet Viscosity			cP		0.012		
	25	Inlet Specific Heat Ratio			—				
	26	Inlet Vapour Pressure							
CALCULATED RESULTS	27	Flow Coefficient Cv			—				
	28	Sound Pressure Level			dBA				

BODY AND TRIM	29	Manufacturer	Balon					
	30	Model	2F-F33-RF					
	31	Body Type	Ball / Rotary					
	32	Body Size	Trim Size	2 in				
	33	Rated Cv	None					
	34	End Connec. & Rating	2 Inch Class 300					
	35	Body Material	ASTM 216					
	36	Bonnet Type	Material		Carbon Steel			
	37	Uni or Bidirectional						
	38	Fire Safe Design	Yes					
	39	Guiding	No. of Ports		2			
	40	Trim Type	Rated Travel					
	41	Plug/ Ball/ Disk Material	Ball Valve					
	42	Balanced / Unbalanced						
	43	Seat Material	Nylon					
	44	Stem Material	Carbon Steel					
	45	Packing Type / Material	TFE Seals					
	46	Valve Break Torque						
ACTUATOR	47	Manufacturer	EL-O-MATIC					
	48	Model	ES0350.U2D04A.S27KL0					
	49	Type	Spring					
	50	Size	Area	2"				
	51	Handwheel Location	None					
	52	Max Rated Pressure	80 psi					
	53	Action On Air Failure	Fail Open					
	54	Action On Signal Failure	Fail Open					

ACTUATOR	55	Valve Stroke Time						
	56	Fire Proofing	N/A					
	57	Orientation	Top					
	58	Pilot Valve	No					
	59	Visual Indicator	Beacon					
	60	Speed Control	No					
	61	Act. Amb. Temp Range	-40°C to 80°C					
SOLENOID VALVE	62	Manufacturer	ASCO					
	63	Model	EF8314H301-24					
	64	Type	3-Way					
	65	When De-Energ.Valve:	N/A					
	66	Solenoid Tag	002-BYS-01-1610					
SWITCHES	67	Manufacturer	Westlock					
	68	Model	9479N-BY					
	69	Type	Quantity	Monitor				
	70	Contacts / Rating	Non-contact					
	71	Switching Position	Open/Close					
	72	Switch Tags	002-BZSC/BZSO-01-1610					
AIR SET	73	Manufacturer	Fisher					
	74	Model	67CFR					
	75	Set Press	Filter	Gauge	80 psi			
TESTS	76	Hydro. Pressure						
	77	Allowable Leakage	ANSI IV (standard)					
	78							
PURCHASE	79	Manufacturer	---					
	80	Model						
	81	PO Number						
	82	Price						
	83	Valve CRN Number						
	84							

Notes: See Notes Page

No.	By	Date	Revision

INSTRUMENT SPECIFICATION
Pneumatic On/Off Valve
Code:131

Instr. Chk	Process Chk	Appr.

Sheet of

Dwg. No.: FER-002.1102039085-J-DSH-BDV-01-1610-01 Rev.:

Project: CONVENTIONAL RED DEER / FERRIER - 11-02 GATHERING SYSTEM / 002 - LIQUID EXTRACTION PLANT - SHALLOW CUT

GENERAL					
	1	P&ID Number	Tag Number	5B1108-02-DR-00-001	002-BDV -01-1610
	2	Service		V-01-1610 HP FLR TO HP FLR HDR	

Notes:

				INSTRUMENT SPECIFICATION Pneumatic On/Off Valve Code:131		
				Instr. Chk	Process Chk	Appr.
No.	By	Date	Revision	Dwg. No.: FER-002.1102039085-J-DSH-BDV-01-1610-01		Rev.:

Sheet of

Project: CONVENTIONAL RED DEER / FERRIER - 11-02 GATHERING SYST / 002 - LIQUID EXTRACTION PLANT

GENERAL	1	P&ID Number	Tag Number			5B1108-02-DR-00-001			002-FE -01-1610		
	2	Service				V-01-1610 PROD GAS TO CMPR					
	3	Line Number				324-PG-A11-01339					
	4	Line	Size	Sched.	I.D.	12 in	Schedule	STD	12.	in	
	5	Ambient Temp. Range	Location			-20° to 100° F		FIELD (INSIDE)			
	6										
PROCESS CONDITIONS	7	Fluid	State			Produced Gas		Gas/Vapor			
	8	Flow	Min.	Oper.	Max.	353.96 SMm^3/d		SMm^3/d	1415850	SMm^3/d	
	9	Pressure	Min.	Oper.	Max.	600 kPa-g	700	kPa-g	800	kPa-g	
	10	Temperature	Min.	Oper.	Max.	23 °C	43	°C	53	°C	
	11	Base Pressure	Base Temperature			kPa		°C			
	12	Design Pressure	Design Temperature			1379 kPa-g		-29 °C			
	13	Base Specific Gravity	Oper. Specific Gravity			0.77					
	14	Molecular Mass	Specific Heat Ratio			22.1					
	15	Oper. Viscosity	Vapor Pressure			0.012 cP					
	16	Quality	Superheat								
	17	Compressibility									
	18	Maximum Allowable Pressure Loss				138.4 inH2O					
	19										
	20										
ORIFICE PLATE	21	Type									
	22	Material				316L SS					
	23	Thickness				0.25 in					
	24	Bore Diameter				8.625 in					
	25	Beta Ratio				0.75					
	26	Drain or Vent Hole									
	27	Sizing Basis									
	28	Sizing Flow Rate	Sizing Pressure Drop			1415842 Sm^3/d					
	29	Differential Pressure @ Sizing Flow				TO					
	30										
ORIFICE FLANGES	31	Size				14 in					
	32	Rating				300 ANSI					
	33	Type				RFWN					
	34	Facing									
	35	Flange Material				A216 WCB					
	36	Gasket Material				316SS Flexitallic Gasket					
	37	Taps Type									
	38	Taps Size				in					
	39	Taps Orientation				1.000" from plate face					
	40	Flanges Included				Yes					
	41										
PURCHASE	42	Manufacturer				Canalta					
	43	Model				1430RFDC40SSAW00WF_AAA9-FF-CC-N-PX					
	44	Purchase Order Number									
	45	Price									
	46	CRN Number				AF-0014					

Notes: See Notes Page

No.	By	Date	Revision

INSTRUMENT SPECIFICATION
Orifice Plate
Code:210

Instr. Chk	Process Chk	Appr.

Sheet : of :

Dwg. No.: FER-002.1102039085-J-DSH-FE-01-1610-01 Rev.:

Project: CONVENTIONAL RED DEER / FERRIER - 11-02 GATHERING SYSTEM / 002 - LIQUID EXTRACTION PLANT - SHALLOW CUT

GENERAL				
	1	P&ID Number	Tag Number	5B1108-02-DR-00-001	002-FE -01-1610
	2	Service		V-01-1610 PROD GAS TO CMPR	

Notes:

				INSTRUMENT SPECIFICATION Orifice Plate Code:210		
				Instr. Chk	Process Chk	Appr.
						Sheet of
No.	By	Date	Revision	Dwg. No.: FER-002.1102039085-J-DSH-FE-01-1610-01		Rev.:

Project: CONVENTIONAL RED DEER / FERRIER - 11-02 GATHERING SYST / 002 - LIQUID EXTRACTION PLANT

GENERAL	1	P&ID Number	Tag Number			5B1108-02-DR-00-001		002-FIT -01-1610			
	2	Service				V-01-1610 PROD GAS TO CMPR					
	3	Line Number	Equipment Number			324-PG-A11-01339		002-V-01-1610			
	4	Area Classification	Location			Class 1, Division 2		FIELD (INSIDE)			
	5	Ambient Temperature Range				-40 to 175 °F (-40 to 80 °C)					
	6	Function	Mounting			Differential Pressure Static		Pipe Mount			
	7										
	8										
PROCESS CONDITIONS	9	Fluid	State			Produced Gas		Gas/Vapor			
	10	Pressure	Min.	Oper.	Max.	600	kPa-g	700	kPa-g	800	kPa-g
	11	Temperature	Min.	Oper.	Max.	23	ºC	43	ºC	53	ºC
	12	Design Pressure	Design Temperature			1379	kPa-g	-29	ºC		
	13	Oper. Spec. Gravity	Oper. Viscosity			0.77		0.012	cP		
	14	Vacuum	Over Pressure								
TRANSMITTER	15	Application									
	16	Type				Rosemount Pressure Transmitter					
	17	Instrument Differential Pressure Range Limits				-623	TO	623	mbar		
	18	Calibrated Differential Pressure Range				-250	TO	250	inH2O		
	19	Calibrated Flow Range					TO				
	20	Elevation	Suppression								
	21	Element Type				Diaphragm					
	22	Element Material	Body Material					Aluminum housing			
	23	Max. Static Pressure	Body Rating			250 inH2O					
	24	Process Flanges Material				Stainless Steel					
	25	Wetted O - Ring Material				Glass-Filled PTFE					
	26	Fill Fluid and Rated Temperature Range				N/A					
	27	Bolts	Enclosure			Stainless Steel					
	28	Process Connection	Electrical Connection								
	29	Accuracy	Response Time			±0.005%		745 milliseconds			
	30	Allow.Oper. Pressure	Allow.Oper.Temp.			800 psi		-200 to 850 °C			
DIAPHRAGM SEAL	31	Process Connection & Rating				1/2 NPT					
	32	Diaphragm Material	Seal Construction			316L					
	33	Housing Material: Upper / Lower				Aluminum					
	34	Fill Fluid and Rated Temperature Range				N/A					
	35	Capillary Armour Material				N/A					
	36	Capillary Type	Capillary Length			N/A					
	37	Flush Ring Material	No. of Flush Rings			N/A					
	38	Flushing Conn. Size	No. of Connections			N/A					
	39										
	40										
OPTIONS	41	Integral Meter	Scale								
	42	Mounting Brackets				2" pipe					
	43										
	44										
	45										
COMMUNICATION	46	Communication Type / Output				Hart Protocol / 4-20 mA HART					
	47	Power Supply				No					
	48										
	49										
PURCHASE	50	Manufacturer				Rosemount					
	51	Model				3051SMV3M12G3R2A11A1AC12K6M5P1Q4Q8					
	52	Purchase Order Number									
	53	Price									
	54	CRN Number				0F0792.2					

Notes: See Notes Page

No.	By	Date	Revision

INSTRUMENT SPECIFICATION
DP Flow Transmitter
Code:352

Instr. Chk	Process Chk	Appr.

Sheet : of :

Dwg. No.: FER-002.1102039085-J-DSH-FIT-01-1610-01 Rev.:

Project: CONVENTIONAL RED DEER / FERRIER - 11-02 GATHERING SYSTEM / 002 - LIQUID EXTRACTION PLANT - SHALLOW CUT

GENERAL	1	P&ID Number	Tag Number	5B1108-02-DR-00-001	002-FIT -01-1610
	2	Service		V-01-1610 PROD GAS TO CMPR	

Notes:

				INSTRUMENT SPECIFICATION DP Flow Transmitter Code:352		
				Instr. Chk	Process Chk	Appr.
						Sheet of
No.	By	Date	Revision	Dwg. No.: FER-002.1102039085-J-DSH-FIT-01-1610-01		Rev.:

Project: CONVENTIONAL RED DEER / FERRIER - 11-02 GATHERING SYST / 002 - LIQUID EXTRACTION PLANT

GENERAL	1	P&ID Number	Tag Number			5B1108-02-DR-00-001		002-FIT -01-1610A		
	2	Service				V-01-1610 COND TO COND STBLZ				
	3	Line Number				60-PL-A11-01310				
	4	Line	Size	Sched.	I.D.	2 in	Schedule	80	1.939	in
	5	Area Classification	Location			Condensate		FIELD (INSIDE)		
	6	Ambient Temperature Range				-40 to 175 °F (-40 to 80 °C)				
	7									
PROCESS CONDITIONS	8	Fluid	State			Liquid		Liquid		
	9	Flow	Min.	Oper.	Max.					
	10	Pressure	Min.	Oper.	Max.	600 kPa-g		700 kPa-g	800	kPa-g
	11	Temperature	Min.	Oper.	Max.	23 ºC		43 ºC	53	ºC
	12	Base Pressure	Base Temperature			kPa		ºC		
	13	Design Pressure	Design Temperature			1379 kPa-g		-29 ºC		
	14	Oper. Specific Gravity	Oper. Viscosity			0.77		0.21 cP		
	15	Coefficient of Expansion								
	16									
METER	17	Type of Element				Turbine Meter				
	18	Size	End Connection			2 in		EZ-IN		
	19	Temperature & Pressure Rating				-67 to 250 Degree F				
	20	Meter Flow Range Limits				TO				
	21	Calibrated Flow Range				0.75 TO 7.5 USGPM				
	22	Totalized Unit								
	23	Enclosure	Power Supply					24 VDC Loop		
	24	Materials of Construction	Outer Housing			CSA Explosion proof, Class 1, Division 1, Groups A,B,C &D				
	25		Main Body Cover			316L SS				
	26		Piston Element							
	27		Shaft			Tungsten Carbide				
	28		Blades							
	29		O-Ring							
	30		Packing							
	31									
	32	Bearings: Type & Material								
	33	Type of Coupling								
COUNTER	34	Register Type				Direct mount turbine totalizer				
	35	Totalizer				NuFlo MC-III Exp Flow Analyzer				
	36	Reset								
	37	Capacity								
	38	Set Stop								
	39									
OPTIONS	40	Shut-Off Valve								
	41	Switch: Single / 2-Stage								
	42	Temperature Compensator								
	43	Transmitter Type								
	44	Transmitter Output								
	45	Air Eliminator								
	46	Strainer: Size & Mesh								
	47									
	48									
	49									
PURCHASE	50	Manufacturer				NuFlo				
	51	Model								
	52	Purchase Order Number								
	53	Price								
	54	CRN Number				0F00123.2C				

Notes: See Notes Page

No.	By	Date	Revision

INSTRUMENT SPECIFICATION
Turbine Flowmeter
Code:317

Instr. Chk	Process Chk	Appr.

Sheet of

Dwg. No.: FER-002.1102039085-J-DSH-FIT-01-1610A-01 Rev.:

GENERAL	1	P&ID Number	Tag Number	5B1108-02-DR-00-001	002-FIT -01-1610A
	2	Service		V-01-1610 COND TO COND STBLZ	

Notes:

				INSTRUMENT SPECIFICATION Turbine Flowmeter Code:317		
				Instr. Chk	Process Chk	Appr.
						Sheet of
No.	By	Date	Revision	Dwg. No.: FER-002.1102039085-J-DSH-FIT-01-1610A-01		Rev.:

Project: CONVENTIONAL RED DEER / FERRIER - 11-02 GATHERING SYST / 002 - LIQUID EXTRACTION PLANT

GENERAL	1	P&ID Number	Tag Number			5B1108-02-DR-00-001			002-FO -01-1610B		
	2	Service				V-01-1610 HP FLR TO HP FLR HDR					
	3	Line Number				60-PG-A11-01340					
	4	Line	Size	Sched.	I.D.	2	in	Schedule	80	1.939	in
	5	Ambient Temp. Range	Location						FIELD		
	6										
PROCESS CONDITIONS	7	Fluid	State						Gas/Vapor		
	8	Flow	Min.	Oper.	Max.						
	9	Pressure	Min.	Oper.	Max.	600	kPa-g	700	kPa-g	800	kPa-g
	10	Temperature	Min.	Oper.	Max.	23	ºC	43	ºC	53	ºC
	11	Base Pressure	Base Temperature				kPa			ºC	
	12	Design Pressure	Design Temperature			1379	kPa-g		-29	ºC	
	13	Oper. Specific Gravity	Oper. Density			0.77					
	14	Molecular Mass	Specific Heat Ratio								
	15	Oper. Viscosity	Vapor Pressure			0.012	cP				
	16	Quality	Superheat								
	17	Compressibility				0.973					
	18	Maximum Allowable Pressure Loss					inH2O				
	19	Sizing Flow Rate	Sizing Pressure Drop								
	20										
	21										
ORIFICE PLATE	22	Type				Restriction Device					
	23	Material				316 S.S.					
	24	Thickness				1/8	in				
	25	Bore Diameter				0.351	in				
	26	Beta Ratio									
	27	Drain or Vent Hole									
	28	RTJ Ring Material and Type									
	29										
ORIFICE FLANGES	30	Size									
	31	Type									
	32	Rating									
	33	Facing									
	34	Flange Material									
	35	Gasket Material									
	36										
	37										
	38										
	39										
	40										
	41										
PURCHASE	42	Manufacturer				Rylex Machine					
	43	Model									
	44	Purchase Order Number									
	45	Price									
	46	CRN Number				N/A					

Notes: See Notes Page

No.	By	Date	Revision

INSTRUMENT SPECIFICATION
Restriction Orifice
Code:201

Instr. Chk	Process Chk	Appr.

Sheet : of :

Dwg. No.: FER-002.1102039085-J-DSH-FO-01-1610B-01 Rev.:

GENERAL	1	P&ID Number	Tag Number	5B1108-02-DR-00-001	002-FO -01-1610B
	2	Service		V-01-1610 HP FLR TO HP FLR HDR	

Notes: Custom made therefore no model number.

				INSTRUMENT SPECIFICATION Restriction Orifice Code:201		
				Instr. Chk	Process Chk	Appr.
No.	By	Date	Revision	Dwg. No.: FER-002.1102039085-J-DSH-FO-01-1610B-01		Rev.:

Sheet : of :

Project: CONVENTIONAL RED DEER / FERRIER - 11-02 GATHERING SYST / 002 - LIQUID EXTRACTION PLANT

GENERAL	1	P&ID Number	Tag Number			5B1108-02-DR-00-001		002-LCV -01-1610			
	2	Service				V-01-1610 CARD GAS SEP					
	3	Line Number				60-PL-A11-01310					
	4	Area Classification	Location			Class 1, Division 2		FIELD (INSIDE)			
	5	Ambient Temperature Range				-40 to 85 °C (-40 to 185 °F)					
	6	Allowable Sound Pressure Level dBA									
	7	Available Air Supply Pressure:	Min.	Max.							
	8	Signal Failure Position									
	9										
PIPE LINE	10	Line Size and Schedule	Inlet	Outlet		2 in 80					
	11	Pipe Material	Pipe Insulation			SA-106N					
PROCESS CONDITIONS	12	Process Fluid	Upstream Condition			Condensate		Liquid			
	13	Max Differential Pressure At Shut Off				kPa					
	14	Critical Pressure	Critical Temperature			497 psi-a		°C			
	15	Design Pressure	Design Temperature			1379 kPa-g		-29 °C			
	16					Units	@ Max Flow	@ Norm Flow	@ Min Flow		
	17	Flow Rate				Sm³/d	1415850				
	18	Inlet Pressure				kPa-g	800	700	600		
	19	Pressure Drop				kPa		1379			
	20	Inlet Temperature				°C	53	43	23		
	21	Inlet Density / Specific Gravity / Molecular Mass				kg/m³	613				
	22	Inlet Compressibility Factor				—					
	23	Inlet Viscosity				cP	0.21				
	24	Inlet Specific Heat Ratio				—					
	25	Inlet Vapour Pressure									
CALCULATED RESULTS	26	Flow Coefficient Cv				—					
	27	Travel									
	28	Sound Pressure Level				dBA					
BODY AND TRIM	29	Manufacturer	Fisher			POSITIONER	55	Manufacturer	Fisher		
	30	Model	D-Body				56	Model	DVC-6200HC		
	31	Body Type	Ball / Rotary				57	Signal:Inlet / Outlet	4-20 mA DC	4-20 mA DC	
	32	Body Size / Trim Size	2 in	1/4"			58	Increase Signal, Valve:			
	33	Rated Cv / Characteris.					59	Cam Char. / Integral I/P		Yes	
	34	End Connec. & Rating	2 Inch CL300 RF				60	Bypass / Gauges		Yes	
	35	Body Material	WCC Steel Body				61	Tag Number	002-LYI-01-1610		
	36	Bonnet Type / Material				SOLENOID VALVE	62	Manufacturer	ASCO		
	37	Flow Direc. / Action To					63	Model	EF8314H301-24		
	38	Lubricator / Isolat. Valve					64	Type	3-Way		
	39	Guiding / No. of Ports					65	When De-Energ.Valve:	N/A		
	40	Trim Type / Rated Travel	#57				66	Solenoid Tag	002-LYS-01-1610		
	41	Plug/ Ball/ Disk Material				SWITCHES	67	Manufacturer	N/A		
	42	Balanced / Unbalanced	Unbalanced				68	Model			
	43	Seat Material	316 SST				69	Type / Quantity			
	44	Cage / Stem Material		S20910			70	Contacts / Rating			
	45	Packing Material					71	Switching Position			
	46	Packing Type					72	Switch Tags			
ACTUATOR	47	Manufacturer	Fisher			AIR SET	73	Manufacturer			
	48	Model	667				74	Model			
	49	Type	Spring & Diaphragm				75	Set Press / Filter / Gauge			
	50	Size / Area	40	445 sq.cm		TESTS	76	Hydro. Pressure			
	51						77	Allowable Leakage	ANSI IV (standard)		
	52	Handwheel Location	None				78				
	53	Bench Range / MAWP	0-30 Psig			PURCHASE	79	Manufacturer	*		
	54	Action	Closed				80	Model			
							81	PO Number			
							82	Price			
							83	Valve CRN Number	0C8912.5C ADD2		
							84	Soft Tag			

Notes: See Notes Page

No.	By	Date	Revision

INSTRUMENT SPECIFICATION
Control Valve
Code:111

Instr. Chk	Process Chk	Appr.

Sheet of

Dwg. No.: FER-002.1102039085-J-DSH-LCV-01-1610-01 Rev.:

Project: CONVENTIONAL RED DEER / FERRIER - 11-02 GATHERING SYST / 002 - LIQUID EXTRACTION PLANT

GENERAL	1	P&ID Number	Tag Number	5B1108-02-DR-00-001	002-LCV -01-1610
	2	Service		V-01-1610 CARD GAS SEP	

Notes:

				INSTRUMENT SPECIFICATION Control Valve Code:111		
				Instr. Chk	Process Chk	Appr.
						Sheet of
No.	By	Date	Revision	Dwg. No.: FER-002.1102039085-J-DSH-LCV-01-1610-01		Rev.:

Project: CONVENTIONAL RED DEER / FERRIER - 11-02 GATHERING SYST / 002 - LIQUID EXTRACTION PLANT

GENERAL	1	P&ID Number	Tag Number			5B1108-02-DR-00-001			002-LG -01-1610A			
	2	Service				V-01-1610 CARD GAS SEP						
	3	Line Number	Equipment Number			TNK/VESL NZZL 2" 300			002-V-01-1610			
	4	Area Classification	Location			Level Guage			FIELD (INSIDE)			
	5											
PROCESS CONDITIONS	6	Fluid	State									
	7	Pressure	Min.	Oper.	Max.	550	kPa-g	700	kPa-g	1000	kPa-g	
	8	Temperature	Min.	Oper.	Max.	4	ºC	10	ºC	20	ºC	
	9	Design Pressure	Design Temperature			1877	kPa-g		66	ºC		
	10	Oper. Specific Gravity										
	11											
	12											
GAUGE	13	Type				Level Gauge						
	14	Center To Center Distance				784.23	mm					
	15	Sections Required										
	16	Connection Size	Rating			1/2	in		20,690 kPag			
	17	Connection Arrangement										
	18	Body Material				ASTM A105 Forged Steel						
	19	Cover Material				Carbon Steel						
	20	Gasket Material				Grafoil						
	21	Float Material										
	22	Shield										
	23	Illuminator	Power Supply									
	24	Jacket or Internal Tracer										
	25	Frost Extension	Length									
	26	Calibrated Scale										
	27											
	28											
	29											
VALVES	30	Type				Gauge Cocks						
	31	Number Required										
	32	Body Material				A105 CS						
	33	Trim Material				Stainless Steel						
	34	Packing Material				Grafoil						
	35	Ball Check										
	36	Vessel	Size	Rating		1/2	in		27,587 kPag			
	37	Connection	Union									
	38	Gauge	Size	Rating		3/4	in		27,587 kPag			
	39	Connection	Union									
	40	Drain	Size	Rating								
	41	Connection										
	42	Vent	Size	Rating								
	43	Connection										
	44											
	45											
OPTIONS	46											
	47											
	48											
	49											
PURCHASE	50	Manufacturer				Penberthy						
	51	Model				2RM9						
	52	Purchase Order Number										
	53	Price										
	54	CRN Number										

Notes: See Notes Page

No.	By	Date	Revision

INSTRUMENT SPECIFICATION
Level Gauge
Code:820

Instr. Chk	Process Chk	Appr.

Sheet : of :

Dwg. No.: FER-002.1102039085-J-DSH-LG-01-1610A-01 Rev.:

GENERAL					
	1	P&ID Number	Tag Number	5B1108-02-DR-00-001	002-LG -01-1610A
	2	Service		V-01-1610 CARD GAS SEP	

Notes:

				INSTRUMENT SPECIFICATION Level Gauge Code:820		
				Instr. Chk	Process Chk	Appr.
						Sheet of
No.	By	Date	Revision	Dwg. No.: FER-002.1102039085-J-DSH-LG-01-1610A-01		Rev.:

Project: CONVENTIONAL RED DEER / FERRIER - 11-02 GATHERING SYST / 002 - LIQUID EXTRACTION PLANT

GENERAL	1	P&ID Number	Tag Number			5B1108-02-DR-00-001			002-LG -01-1610B		
	2	Service				V-01-1610 HP FLR DRIP LEG TO DRAIN					
	3	Line Number	Equipment Number			273-HF-A11-09339			002-V-01-1610		
	4	Area Classification	Location			Class 1, Division 2			FIELD (INSIDE)		
	5										
PROCESS CONDITIONS	6	Fluid	State								
	7	Pressure	Min.	Oper.	Max.	600	kPa-g	700	kPa-g	800	kPa-g
	8	Temperature	Min.	Oper.	Max.	23	ºC	43	ºC	53	ºC
	9	Design Pressure	Design Temperature			1379	kPa-g	-29	ºC		
	10	Oper. Specific Gravity				0.77					
	11										
	12										
GAUGE	13	Type				Level Gauge					
	14	Center To Center Distance				663.58	mm				
	15	Sections Required									
	16	Connection Size	Rating			1/2	in	16,552 kPag			
	17	Connection Arrangement									
	18	Body Material				ASTM A105 Forged Steel					
	19	Cover Material				Carbon Steel					
	20	Gasket Material				Grafoil					
	21	Float Material									
	22	Shield									
	23	Illuminator	Power Supply								
	24	Jacket or Internal Tracer									
	25	Frost Extension	Length								
	26	Calibrated Scale									
	27										
	28										
	29										
VALVES	30	Type				Gauge Cocks					
	31	Number Required									
	32	Body Material				A105 CS					
	33	Trim Material				Stainless Steel					
	34	Packing Material				Grafoil					
	35	Ball Check									
	36	Vessel	Size	Rating							
	37	Connection	Union								
	38	Gauge	Size	Rating							
	39	Connection	Union								
	40	Drain	Size	Rating							
	41	Connection									
	42	Vent	Size	Rating		3/4	in	27,587 kPag			
	43	Connection									
	44										
	45										
OPTIONS	46										
	47										
	48										
	49										
PURCHASE	50	Manufacturer				Penberthy					
	51	Model				2RL7					
	52	Purchase Order Number									
	53	Price									
	54	CRN Number									

Notes: See Notes Page

No.	By	Date	Revision

INSTRUMENT SPECIFICATION
Level Gauge
Code:820

Instr. Chk	Process Chk	Appr.

Sheet of

Dwg. No.: FER-002.1102039085-J-DSH-LG-01-1610B-01 Rev.:

GENERAL	1	P&ID Number	Tag Number	5B1108-02-DR-00-001	002-LG -01-1610B
	2	Service		V-01-1610 HP FLR DRIP LEG TO DRAIN	

Notes:

				INSTRUMENT SPECIFICATION Level Gauge Code:820		
				Instr. Chk	Process Chk	Appr.
No.	By	Date	Revision	Dwg. No.: FER-002.1102039085-J-DSH-LG-01-1610B-01		Rev.:

Sheet : of :

Project: CONVENTIONAL RED DEER / FERRIER - 11-02 GATHERING SYST / 002 - LIQUID EXTRACTION PLANT

GENERAL	1	P&ID Number	Tag Number			5B1108-02-DR-00-001		002-LIT -01-1610		
	2	Service				V-01-1610 CARD GAS SEP				
	3	Line Number	Equipment Number			TNK/VESL NZZL 2" 300		002-V-01-1610		
	4	Area Classification	Location			Class 1 Division 2				
	5	Ambient Temperature Range				-40 to 80 °C				
	6	Function	Mounting			Level indication		Top		
	7	Enclosure				Aluminium housing				
	8									
PROCESS CONDITIONS	9	Fluid Upper	State					Gas/Vapor		
	10	Fluid Lower	State					Liquid		
	11	Density Upper	Density Lower			6.83 kg/m³		1016 kg/m³		
	12	Pressure	Min.	Oper.	Max.	600 kPa-g		700 kPa-g		800 kPa-g
	13	Temperature	Min.	Oper.	Max.	23 ºC		43 ºC		53 ºC
	14	Design Pressure	Design Temperature			1379 kPa-g		-29 ºC		
	15									
	16									
UNIT	17	Instrument Range Limits				-15 TO 580 psi				
	18	Calibrated Level Range				-15 TO 580 psi				
	19	Span				1371.6				
	20	Reference Line (Tangent / Center)								
	21	Reference Leg Fluid Density Level								
	22	Zero Elevation	Zero Supres			Yes		No		
	23	Element Type				Guided wave radar				
	24	Element Material				316L SST				
	25	Body Material	Body Rating			Polyurethane-covered Aluminum				
	26	Process Flanges Material				4" CL300				
	27	Wetted O - Rings Material				BUNA-N				
	28	Fill Fluid				N/A				
	29	Bolts	Housing			SA-194-2H 3/4"		Aluminium		
	30	Paint				Polyurethane				
	31	Process Connection	Electrical Connection			4" ANSI, 300lb		½ - 14 NPT		
	32									
DIAPHRAGM SEAL	33	Process Connection								
	34	Rating								
	35	Diaphragm Material								
	36	Upper Housing Material								
	37	Lower Housing Material								
	38	Fill Fluid								
	39	Capillary Material								
	40	Capillary Type	Capillary Length							
	41	Flushing Connection								
	42									
OPTIONS	43	Integral Meter								
	44	Integral Meter Scale								
	45	Hydrostatic Testing								
	46	Cleaning								
	47	Certification				Yes				
	48	Power Supply				No				
	49									
PURCHASE	50	Manufacturer				Rosemount				
	51	Model				5301HA1S1B4AE00500CBE6M1Q4				
	52	Purchase Order Number								
	53	Price								
	54	CRN Number				0F09004.2				

Notes: See Notes Page

No.	By	Date	Revision

INSTRUMENT SPECIFICATION
Level Transmitter
Code:320

Instr. Chk	Process Chk	Appr.

Sheet of

Dwg. No.: FER-002.1102039085-J-DSH-LIT-01-1610-01 Rev.:

Project: CONVENTIONAL RED DEER / FERRIER - 11-02 GATHERING SYSTEM / 002 - LIQUID EXTRACTION PLANT - SHALLOW CUT

GENERAL				
	1	P&ID Number	Tag Number	5B1108-02-DR-00-001	002-LIT -01-1610
	2	Service		V-01-1610 CARD GAS SEP	

Notes:

				INSTRUMENT SPECIFICATION Level Transmitter Code:320		
				Instr. Chk	Process Chk	Appr.
						Sheet of
No.	By	Date	Revision	Dwg. No.: FER-002.1102039085-J-DSH-LIT-01-1610-01		Rev.:

Project: CONVENTIONAL RED DEER / FERRIER - 11-02 GATHERING SYST / 002 - LIQUID EXTRACTION PLANT

GENERAL	1	P&ID Number	Tag Number			5B1108-02-DR-00-001		002-LIT -01-1610B			
	2	Service				V-01-1610 CARD GAS SEP					
	3	Line Number	Equipment Number			TNK/VESL NZZL 2" 300		002-V-01-1610			
	4	Area Classification	Location			Class 1 Division 2					
	5	Ambient Temperature Range				-40 to 80 °C					
	6	Function	Mounting			Level indication		Top			
	7	Enclosure									
	8										
PROCESS CONDITIONS	9	Fluid Upper	State					Gas/Vapor			
	10	Fluid Lower	State					Liquid			
	11	Density Upper	Density Lower			6.83	kg/m³	1016	kg/m³		
	12	Pressure	Min.	Oper.	Max.	600	kPa-g	700	kPa-g	800	kPa-g
	13	Temperature	Min.	Oper.	Max.	23	ºC	43	ºC	53	ºC
	14	Design Pressure	Design Temperature			1379	kPa-g	-29	ºC		
	15										
	16										
UNIT	17	Instrument Range Limits				-15	TO 580 psi				
	18	Calibrated Level Range					TO				
	19	Span				1371.6					
	20	Reference Line (Tangent / Center)									
	21	Reference Leg Fluid Density Level									
	22	Zero Elevation	Zero Supres			Yes		No			
	23	Element Type				Guided wave radar					
	24	Element Material				SS A 182					
	25	Body Material	Body Rating			Polyurethane-covered Aluminum					
	26	Process Flanges Material				4" CL300					
	27	Wetted O - Rings Material				BUNA-N					
	28	Fill Fluid				N/A					
	29	Bolts	Housing			SA-194-2H 3/4"		Aluminium			
	30	Paint				Polyurethane					
	31	Process Connection	Electrical Connection			4" ANSI, 300lb		½ - 14 NPT			
	32										
DIAPHRAGM SEAL	33	Process Connection									
	34	Rating									
	35	Diaphragm Material									
	36	Upper Housing Material									
	37	Lower Housing Material									
	38	Fill Fluid									
	39	Capillary Material									
	40	Capillary Type	Capillary Length								
	41	Flushing Connection									
	42										
OPTIONS	43	Integral Meter									
	44	Integral Meter Scale									
	45	Hydrostatic Testing									
	46	Cleaning									
	47	Certification				Yes					
	48	Power Supply				No					
	49										
PURCHASE	50	Manufacturer				Rosemount					
	51	Model				5301HA1S1B4AE00500CBE6M1Q4					
	52	Purchase Order Number									
	53	Price									
	54	CRN Number				0F09004.2					

Notes: See Notes Page

No.	By	Date	Revision

INSTRUMENT SPECIFICATION
Level Transmitter
Code:320

Instr. Chk	Process Chk	Appr.

Sheet : of :

Dwg. No.: FER-002.1102039085-J-DSH-LIT-01-1610B-01 Rev.:

Project: CONVENTIONAL RED DEER / FERRIER - 11-02 GATHERING SYSTEM / 002 - LIQUID EXTRACTION PLANT - SHALLOW CUT

GENERAL	1	P&ID Number	Tag Number	5B1108-02-DR-00-001	002-LIT -01-1610B
	2	Service		V-01-1610 CARD GAS SEP	

Notes:

				INSTRUMENT SPECIFICATION Level Transmitter Code:320		
				Instr. Chk	Process Chk	Appr.
						Sheet of
No.	By	Date	Revision	Dwg. No.: FER-002.1102039085-J-DSH-LIT-01-1610B-01		Rev.:

Project: CONVENTIONAL RED DEER / FERRIER - 11-02 GATHERING SYST / 002 - LIQUID EXTRACTION PLANT

GENERAL	1	P&ID Number	Tag Number	5B1108-02-DR-00-001		002-LSH -01-1610C	
	2	Service		002-V-01-1610 HP FLR DRIP LEG TO DRN			
	3	Line No.	Equipment No.	273-HF-A11-09339		002-V-01-1610	
	4	Area Classification	Location	CLASS 1 DIVISION 2		FIELD (INSIDE)	
	5						
	6						
	7						
PROCESS CONDITIONS	8	Fluid					
	9	Pressure Max	Oper.	800	kPa-g	600	kPa-g
	10	Temperature Max.	Oper.	53	ºC	23	ºC
	11						
	12						
	13						
ELEMENT	14	Type		ULTRASONIC LEVEL SWITCH			
	15	Temperature Range Deg. C		-40 °C to +70 °C (-40 °F to +160 °F)			
	16	Maximum Pressure Rating					
	17	Element Materials		CAST ALUMINUM			
	18	Mounting		INTEGRAL			
	19	Insertion Length		3	in		
	20	Maximum Mechanical Load on Element					
	21	LSH Switch Sensing Point					
	22	LSL Switch Sensing Point					
	23						
	24						
	25						
	26						
	27						
	28						
	29						
SWITCH	30	Type					
	31	Output Relay Rating		8 mA (SAFE), 16 mA (ALARM) ± 1 mA			
	32	Input Voltage Requirement		2 WIRE LOOP POWERED, 11 - 35 VDC			
	33	Power Consumption					
	34	On Measurement Increase: LSH					
	35	Indication of Switching					
	36	Conduit Connection Size		3/4	in		
	37						
	38						
	39						
	40						
	41						
PURCHASE	42	Manufacturer		Magnetrol			
	43	Model		961-50A0-010 with 9A1-A11A-003			
	44	Purchase Order Number		FE-CPF-M022			
	45	Price	Item Number				
	46	Serial Number					

Notes: See Notes Page

No.	By	Date	Revision

INSTRUMENT SPECIFICATION
Level Switch
Code:218

Instr. Chk	Process Chk	Appr.

Sheet of

Dwg. No.: FER-002.1102039085-J-DSH-LSH-01-1610C-01 Rev.:

Project: FERRIER / FERRIER - 11-02 GATHERING SYST / 002 - LIQUID EXTRACTION PLANT

GENERAL					
	1	P&ID Number	Tag Number	5B1108-02-DR-00-001	002-LSH -01-1610C
	2	Service		002-V-01-1610 HP FLR DRIP LEG TO DRN	

Notes:

				INSTRUMENT SPECIFICATION Level Switch Code:218		
				Instr. Chk	Process Chk	Appr.
						Sheet of
No.	By	Date	Revision	Dwg. No.: FER-002.1102039085-J-DSH-LSH-01-1610C-01		Rev.:

Project: FERRIER / FERRIER - 11-02 GATHERING SYST / 002 - LIQUID EXTRACTION PLANT

GENERAL	1	P&ID Number	Tag Number	5B1108-02-DR-00-001	002-MTS -01-1680
	2	Service		UHG-01-1680 BLDG HTR	
	3	Line Number	Equipment Number	---	002-PK-01-1600
	4		Location		FIELD
	5				
	6				
	7				
	8				
	9				
	10				
	11				
	12				
	13				
	14				
	15				
	16				
	17				
	18				
	19				
	20				
	21				
	22				
	23				
	24				
	25				
	26				
	27				
	28				
	29				
	30				
	31				
	32				
	33				
	34				
	35				
	36				
	37				
	38				
	39				
	40				
	41				
	42				
	43				
	44				
	45				
	46				
	47				
	48				
	49				
PURCHASE	50	Manufacturer		Ruffneck	
	51	Model			
	52	Purchase Order Number			
	53	Price			
	54	CRN Number			

Notes: See Notes Page

				INSTRUMENT SPECIFICATION		
				Custom Datasheet Code: 999		
				Instr. Chk	Process Chk	Appr.
						Sheet : of :
No.	By	Date	Revision	Dwg. No.: FER-002.1102039085-J-DSH-TSH-01-1680-01		Rev.:

Project: CONVENTIONAL RED DEER / FERRIER - 11-02 GATHERING SYST / 002 - LIQUID EXTRACTION PLANT

GENERAL	1	P&ID Number	Tag Number	5B1108-02-DR-00-001	002-MTS -01-1680
	2	Service		UHG-01-1680 BLDG HTR	

Notes: Model #: XT-311

				INSTRUMENT SPECIFICATION Custom Datasheet Code:999		
				Instr. Chk	Process Chk	Appr.
						Sheet of
No.	By	Date	Revision	Dwg. No.: FER-002.1102039085-J-DSH-TSH-01-1680-01		Rev.:

Project: CONVENTIONAL RED DEER / FERRIER - 11-02 GATHERING SYST / 002 - LIQUID EXTRACTION PLANT

GENERAL	1	P&ID Number	Tag Number	5B1108-02-DR-00-001		002-PCV -01-1600	
	2	Service		PK-01-1600 IA FROM IA HDR			
	3	Line Number	Location	60-IA-AU11-22307		FIELD	
	4	Line Size and Schedule	Inlet / Outlet	2 in 80			
	5	Ambient Temp. Range	Flange Face to Face	-40 to 82°C			
PROCESS CONDITIONS	6	Process Fluid	Upstream Condition	Instrument Air		Gas/Vapor	
	7	Max Differential Pressure At Shut Off		kPa			
	8	Critical Pressure	Critical Temperature	3427 kPa-a		ºC	
	9	Design Pressure	Design Temperature	1379 kPa-g		-29 ºC	
	10			Units	@ Max Flow	@ Norm Flow	@ Min Flow
	11	Flow Rate		AMm³/d	1415842	1415842	1415842
	12	Inlet Pressure		kPa-g	700	600	600
	13	Pressure Drop		kPa	150	50	50
	14	Inlet Temperature		ºC	53	43	23
	15	Inlet Density / Spec. Gravity / Molecular Mass		SG	0.77	0.77	0.77
	16	Inlet Compressibility Factor		—	0.973	0.973	0.973
	17	Inlet Viscosity		cP	0.21	0.21	0.21
	18	Inlet Specific Heat Ratio		—			
	19	Inlet Vapour Pressure			697	697	600
CALCULATED RESULTS	20	Flow Coefficient Cv		—	0.326	0.326	0.461
	21	Wide Open Flow - Calculated					
	22	Sound Pressure Level		dBA			
BODY	23	Size	Trim Size / Cv	1/4 in	N/A	0.35	
	24	Form or Type		Regulator			
	25	End Connections & Rating		1/4 NPT			
	26	*Material: Body / Flange*		Aluminium			
	27	*Max. Pressure / Max. Temp.*		250 psig			
	28	Stem Material	Packing Material	Aluminium		PTFE	
	29						
	30	Lubricator	Iso. Valve	No		21 BA8202A	
TRIM	31	Guiding	No. Ports	N/A		N/A	
	32	Trim Form		N/A			
	33	Trim Material	Seat Material	N/A		Nitrile (NBR)	
	34	Gasket Material	Bushing Material	Nitrile O-ring			
	35	Required Seat Tightness					
ACTUATOR / PILOT	36	Type					
	37	Pilot					
	38	Supply to Pilot					
	39	Self Connection	External Connection				
	40	Diaphragm Material		Nitrile (NBR)			
	41	Spring Range		0-35			
	42	Set Point		80 psig			
	43	Max Allowable Inlet Pressure		250 psig			
	44						
ACCESSORIES	45	Filter Regulator	Supply Gauge	Yes		Yes	
	46	Line Strainer		No			
	47	Housing Vent		No			
	48	Internal Relief		No			
	49	*Owner Tag Plate*					
PURCHASE	50	Manufacturer		Fisher			
	51	Model		67CFR			
	52	Purchase Order Number					
	53	Price					
	54	CRN Number					

Notes: See Notes Page

No.	By	Date	Revision

INSTRUMENT SPECIFICATION
Pressure Regulator
Code:141

Instr. Chk	Process Chk	Appr.

Sheet : of :

Dwg. No.: FER-002.1102039085-J-DSH-PCV-01-1600-01 Rev.:

Project: CONVENTIONAL RED DEER / FERRIER - 11-02 GATHERING SYST / 002 - LIQUID EXTRACTION PLANT

GENERAL	1	P&ID Number	Tag Number	5B1108-02-DR-00-001	002-PCV -01-1600
	2	Service		PK-01-1600 IA FROM IA HDR	

Notes:

				INSTRUMENT SPECIFICATION Pressure Regulator Code:141		
				Instr. Chk	Process Chk	Appr.
						Sheet of
No.	By	Date	Revision	Dwg. No.: FER-002.1102039085-J-DSH-PCV-01-1600-01		Rev.:

Project: CONVENTIONAL RED DEER / FERRIER - 11-02 GATHERING SYST / 002 - LIQUID EXTRACTION PLANT

GENERAL	1	P&ID Number	Tag Number	5B1108-02-DR-00-001	002-PCV -01-1600A		
	2	Service		PK-01-1600 IA FROM IA HDR			
	3	Line Number	Location	60-IA-AU11-22307	FIELD		
	4	Line Size and Schedule	Inlet / Outlet	2 in 80			
	5	Ambient Temp. Range	Flange Face to Face	-40 to 82°C			
PROCESS CONDITIONS	6	Process Fluid	Upstream Condition	Instrument Air	Gas/Vapor		
	7	Max Differential Pressure At Shut Off		kPa			
	8	Critical Pressure	Critical Temperature	3427 kPa-a	ºC		
	9	Design Pressure	Design Temperature	1379 kPa-g	-29 ºC		
	10			Units	@ Max Flow	@ Norm Flow	@ Min Flow
	11	Flow Rate		AMm³/d	1415842	1415842	1415842
	12	Inlet Pressure		kPa-g	700	600	600
	13	Pressure Drop		kPa	150	50	50
	14	Inlet Temperature		ºC	53	43	23
	15	Inlet Density / Spec. Gravity / Molecular Mass		SG	0.77	0.77	0.77
	16	Inlet Compressibility Factor		—	0.973	0.973	0.973
	17	Inlet Viscosity		cP	0.21	0.21	0.21
	18	Inlet Specific Heat Ratio		—			
	19	Inlet Vapour Pressure			697	697	600
CALCULATED RESULTS	20	Flow Coefficient Cv		—	0.326	0.326	0.461
	21	Wide Open Flow - Calculated					
	22	Sound Pressure Level		dBA			
BODY	23	Size	Trim Size / Cv	1/4 in	N/A	0.35	
	24	Form or Type		Regulator			
	25	End Connections & Rating		1/4 NPT			
	26	*Material: Body / Flange*		Aluminium			
	27	*Max. Pressure / Max. Temp.*		250 psig			
	28	Stem Material	Packing Material	Aluminium	PTFE		
	29						
	30	Lubricator	Iso. Valve	No	21 BA8202A		
TRIM	31	Guiding	No. Ports	N/A	N/A		
	32	Trim Form		N/A			
	33	Trim Material	Seat Material	N/A	Nitrile (NBR)		
	34	Gasket Material	Bushing Material	Nitrile O-ring			
	35	Required Seat Tightness					
ACTUATOR / PILOT	36	Type					
	37	Pilot					
	38	Supply to Pilot					
	39	Self Connection	External Connection				
	40	Diaphragm Material		Nitrile (NBR)			
	41	Spring Range		0-125 psig			
	42	Set Point		80 psig			
	43	Max Allowable Inlet Pressure		250 psig			
	44						
ACCESSORIES	45	Filter Regulator	Supply Gauge	Yes	Yes		
	46	Line Strainer		No			
	47	Housing Vent		No			
	48	Internal Relief		No			
	49	*Owner Tag Plate*					
PURCHASE	50	Manufacturer		Fisher			
	51	Model		67CFR			
	52	Purchase Order Number					
	53	Price					
	54	CRN Number					

Notes: See Notes Page

No.	By	Date	Revision

INSTRUMENT SPECIFICATION
Pressure Regulator
Code:141

Instr. Chk	Process Chk	Appr.

Sheet : of :

Dwg. No.: FER-002.1102039085-J-DSH-PCV-01-1600A-01 Rev.:

Project: CONVENTIONAL RED DEER / FERRIER - 11-02 GATHERING SYST / 002 - LIQUID EXTRACTION PLANT

GENERAL	1	P&ID Number	Tag Number	5B1108-02-DR-00-001	002-PCV -01-1600A
	2	Service		PK-01-1600 IA FROM IA HDR	

Notes:

				INSTRUMENT SPECIFICATION Pressure Regulator Code:141		
				Instr. Chk	Process Chk	Appr.
						Sheet of
No.	By	Date	Revision	Dwg. No.: FER-002.1102039085-J-DSH-PCV-01-1600A-01		Rev.:

Project: CONVENTIONAL RED DEER / FERRIER - 11-02 GATHERING SYST / 002 - LIQUID EXTRACTION PLANT

GENERAL	1	P&ID Number	Tag Number			5B1108-02-DR-00-001			002-PG -01-1600		
	2	Service				PK-01-1600 IA FROM IA HDR					
	3	Line Number	Equipment Number			60-IA-AU11-22307			002-PK-01-1600		
	4	Ambient Temp. Range	Location			-40°C to 65°C			FIELD		
	5										
PROCESS CONDITIONS	6	Fluid	State			Instrument air			Gas/Vapor		
	7	Pressure	Min.	Norm.	Max.	550 kPa-g		830 kPa-g		910 kPa-g	
	8	Temperature	Min.	Norm.	Max.	20 ºC		25 ºC		45 ºC	
	9	Design Pressure	Design Temperature			1379 kPa-g			-29 ºC		
	10	Pulsation	Vibration								
	11										
GAUGE	12	Type				Pressure indicating; gauge receiver					
	13	Range				0 TO 414 kPag					
	14	Figure Interval				100 kPag					
	15	Minor Graduation				10 kPag					
	16	Mounting				Local					
	17	Dial Size	Dial Color			2 in			White		
	18	Pointer Zero Adjustment				Yes					
	19	Case Material				Steel, painted black					
	20	Ring Construction	Ring Material			Screwed ring			Steel, painted black		
	21	Blow-Out Protection				No					
	22	Lens Material				Polycarbonate					
	23	Pressure Element Type and Material				Bourdon tube, phosphor bronze					
	24	Liquid Fill and Rated Temperature Range				No					
	25	Socket Material				Brass					
	26	Connection Size				1/4 NPT in					
	27	Connection Location				Back					
	28	Movement Material				Brass					
	29	Nominal Accuracy				±3-2-3% ANSI/ASME Grade B					
	30	Rated Temperature Range				-40°C to 65°C					
	31										
DIAPHRAGM SEAL	32	Type									
	33	Process Connection Size and Rating									
	34	Diaphragm Material									
	35	Bottom Housing Material									
	36	Top Housing Material									
	37	Capillary Length									
	38	Capillary Material									
	39	Flushing Connection									
	40	Flushing Ring: # of Connections and Material									
	41	Fill Fluid and Rated Temperature Range									
	42	Connection to Instrument									
	43	Rated Pressure Range									
OPTIONS	44	Syphon: Type	Material								
	45	Snubber: Type	Material								
	46	Cooling Fins									
	47										
	48										
	49										
PURCHASE	50	Manufacturer				Winters					
	51	Model				PEM1405					
	52	Purchase Order Number									
	53	Price									
	54	CRN Number				0F06751.52					

Notes: See Notes Page

No.	By	Date	Revision

INSTRUMENT SPECIFICATION
Pressure Gauge
Code:831

Instr. Chk	Process Chk	Appr.

Sheet of

Dwg. No.: FER-002.1102039085-J-DSH-PG-01-1600-01 Rev.:

Project: CONVENTIONAL RED DEER / FERRIER - 11-02 GATHERING SYSTEM / 002 - LIQUID EXTRACTION PLANT - SHALLOW CUT

GENERAL	1	P&ID Number	Tag Number	5B1108-02-DR-00-001	002-PG -01-1600
	2	Service		PK-01-1600 IA FROM IA HDR	

Notes:

				INSTRUMENT SPECIFICATION Pressure Gauge Code:831		
				Instr. Chk	Process Chk	Appr.
						Sheet of
No.	By	Date	Revision	Dwg. No.: FER-002.1102039085-J-DSH-PG-01-1600-01		Rev.:

Project: CONVENTIONAL RED DEER / FERRIER - 11-02 GATHERING SYST / 002 - LIQUID EXTRACTION PLANT

GENERAL	1	P&ID Number	Tag Number			5B1108-02-DR-00-001			002-PG -01-1600A		
	2	Service				PK-01-1600 IA FROM IA HDR					
	3	Line Number	Equipment Number			60-IA-AU11-22307			002-PK-01-1600		
	4	Ambient Temp. Range	Location			-40°C to 65°C			FIELD		
	5										
PROCESS CONDITIONS	6	Fluid	State			Instrument air			Gas/Vapor		
	7	Pressure	Min.	Norm.	Max.	550 kPa-g		830 kPa-g		910 kPa-g	
	8	Temperature	Min.	Norm.	Max.	20 ºC		25 ºC		45 ºC	
	9	Design Pressure	Design Temperature			1379 kPa-g			-29 ºC		
	10	Pulsation	Vibration								
	11										
GAUGE	12	Type				Pressure indicating; gauge receiver					
	13	Range				0 TO 414 kPag					
	14	Figure Interval				100 kPag					
	15	Minor Graduation				10 kPag					
	16	Mounting				Local					
	17	Dial Size	Dial Color			2 in			White		
	18	Pointer Zero Adjustment				Yes					
	19	Case Material				Steel, painted black					
	20	Ring Construction	Ring Material			Screwed ring			Steel, painted black		
	21	Blow-Out Protection				No					
	22	Lens Material				Polycarbonate					
	23	Pressure Element Type and Material				Bourdon tube, phosphor bronze					
	24	Liquid Fill and Rated Temperature Range				No					
	25	Socket Material				Brass					
	26	Connection Size				1/4 NPT in					
	27	Connection Location				Back					
	28	Movement Material				Brass					
	29	Nominal Accuracy				±3-2-3% ANSI/ASME Grade B					
	30	Rated Temperature Range				-40°C to 65°C					
	31										
DIAPHRAGM SEAL	32	Type									
	33	Process Connection Size and Rating									
	34	Diaphragm Material									
	35	Bottom Housing Material									
	36	Top Housing Material									
	37	Capillary Length									
	38	Capillary Material									
	39	Flushing Connection									
	40	Flushing Ring: # of Connections and Material									
	41	Fill Fluid and Rated Temperature Range									
	42	Connection to Instrument									
	43	Rated Pressure Range									
OPTIONS	44	Syphon: Type	Material								
	45	Snubber: Type	Material								
	46	Cooling Fins									
	47										
	48										
	49										
PURCHASE	50	Manufacturer				Winters					
	51	Model				PEM1405					
	52	Purchase Order Number									
	53	Price									
	54	CRN Number				0F06751.52					

Notes: See Notes Page

No.	By	Date	Revision

INSTRUMENT SPECIFICATION
Pressure Gauge
Code:831

Instr. Chk	Process Chk	Appr.

Sheet of

Dwg. No.: FER-002.1102039085-J-DSH-PG-01-1600A-01 Rev.:

GENERAL	1	P&ID Number	Tag Number	5B1108-02-DR-00-001	002-PG -01-1600A
	2	Service		PK-01-1600 IA FROM IA HDR	

Notes:

				INSTRUMENT SPECIFICATION Pressure Gauge Code:831		
				Instr. Chk	Process Chk	Appr.
						Sheet of
No.	By	Date	Revision	Dwg. No.: FER-002.1102039085-J-DSH-PG-01-1600A-01		Rev.:

Project: CONVENTIONAL RED DEER / FERRIER - 11-02 GATHERING SYST / 002 - LIQUID EXTRACTION PLANT

GENERAL	1	P&ID Number	Tag Number			5B1108-02-DR-00-001			002-PG -01-1610D		
	2	Service				V-01-1610 CARD GAS SEP					
	3	Line Number	Equipment Number			TNK/VESL NZZL 2" 300			002-V-01-1610		
	4	Ambient Temp. Range	Location			-20°C to 60°C			FIELD		
	5										
PROCESS CONDITIONS	6	Fluid	State						Gas/Vapor		
	7	Pressure	Min.	Norm.	Max.	600	kPa-g	700	kPa-g	800	kPa-g
	8	Temperature	Min.	Norm.	Max.	23	ºC	43	ºC	53	ºC
	9	Design Pressure	Design Temperature			1379	kPa-g		-29	ºC	
	10	Pulsation	Vibration			Yes			Yes		
	11										
GAUGE	12	Type				Pressure indicating; direct reading					
	13	Range				0	TO	500	psig		
	14	Figure Interval				100 psig					
	15	Minor Graduation				10 psig					
	16	Mounting				Local					
	17	Dial Size	Dial Color			4	in		White		
	18	Pointer Zero Adjustment				Yes					
	19	Case Material				304 SS					
	20	Ring Construction	Ring Material			Screwed ring			Polished SS bayonet ring		
	21	Blow-Out Protection				Yes					
	22	Lens Material				Laminated safety glass with Buna-N gasket					
	23	Pressure Element Type and Material				Bourdon tube, 316L SS					
	24	Liquid Fill and Rated Temperature Range				Glycerine 99.7%					
	25	Socket Material				300-series SS					
	26	Connection Size				1/2 NPT	in				
	27	Connection Location				Bottom					
	28	Movement Material				300-series SS					
	29	Nominal Accuracy				± 1% of span (ASME B40.100 Grade 1A)					
	30	Rated Temperature Range				-20°C to 60°C					
	31										
DIAPHRAGM SEAL	32	Type									
	33	Process Connection Size and Rating									
	34	Diaphragm Material									
	35	Bottom Housing Material									
	36	Top Housing Material									
	37	Capillary Length									
	38	Capillary Material									
	39	Flushing Connection									
	40	Flushing Ring: # of Connections and Material									
	41	Fill Fluid and Rated Temperature Range									
	42	Connection to Instrument									
	43	Rated Pressure Range									
OPTIONS	44	Syphon: Type	Material								
	45	Snubber: Type	Material								
	46	Cooling Fins									
	47										
	48										
	49										
PURCHASE	50	Manufacturer				Wika					
	51	Model				233.54					
	52	Purchase Order Number									
	53	Price									
	54	CRN Number									

Notes: See Notes Page

No.	By	Date	Revision

INSTRUMENT SPECIFICATION
Pressure Gauge
Code:831

Instr. Chk	Process Chk	Appr.

Sheet of

Dwg. No.: FER-002.1102039085-J-DSH-PG-01-1610D-01 Rev.:

Project: CONVENTIONAL RED DEER / FERRIER - 11-02 GATHERING SYSTEM / 002 - LIQUID EXTRACTION PLANT - SHALLOW CUT

GENERAL	1	P&ID Number	Tag Number	5B1108-02-DR-00-001	002-PG -01-1610D
	2	Service		V-01-1610 CARD GAS SEP	

Notes:

				INSTRUMENT SPECIFICATION Pressure Gauge Code:831		
				Instr. Chk	Process Chk	Appr.
						Sheet of
No.	By	Date	Revision	Dwg. No.: FER-002.1102039085-J-DSH-PG-01-1610D-01		Rev.:

Project: CONVENTIONAL RED DEER / FERRIER - 11-02 GATHERING SYST / 002 - LIQUID EXTRACTION PLANT

GENERAL	1	P&ID Number	Tag Number			5B1108-02-DR-00-001			002-PIT -01-1610C			
	2	Service				V-01-1610 CARD GAS SEP						
	3	Line Number	Equipment Number			TNK/VESL NZZL 2" 300			002-V-01-1610			
	4	Area Classification	Location			Class 1 Diviaion 2			FIELD			
	5	Ambient Temperature Range				-40 to 80 °C						
	6	Function	Mounting			Pressure indicating			Pipe mount			
	7											
	8											
	9											
PROCESS CONDITIONS	10	Fluid	State						Gas/Vapor			
	11	Pressure	Min.	Oper.	Max.	600	kPa-g	700	kPa-g	800	kPa-g	
	12	Temperature	Min.	Oper.	Max.	23	ºC	43	ºC	53	ºC	
	13	Design Pressure	Design Temperature			1379	kPa-g			-29	ºC	
	14	Oper. Spec. Gravity	Oper. Viscosity			0.77				0.012	cP	
	15											
TRANSMITTER	16	Instrument Range Limits				-98	TO	13790	kPa			
	17	Calibrated Pressure Range				-98	TO	13790	kPa			
	18	Elevation	Suppression									
	19	Element Type				Diaphragm						
	20	Element Material	Body Material			316L SST			316 SS			
	21	Max Static Pressure	Body Rating						25000 kPag			
	22	Process Flanges Material				SST						
	23	Wetted O-Rings Material				Glass-filled PTFE						
	24	Fill Fluid and Rated Temperature Range				Silicone						
	25	Bolts	Enclosure			Series 300 SST			Aluminium			
	26	Process Connection				1/2-14 NPT Female						
	27	Electrical Connection				No						
	28	Accuracy				0.04% of span						
	29											
	30											
DIAPHRAGM SEAL	31	Process Connection & Rating				½–14 NPT female						
	32	Diaphragm Material	Seal Construction			Alloy C-276						
	33	Housing Material: Upper / Lower				Polyurehane covered aluminium						
	34	Fill Fluid and Rated Temperature Range										
	35	Capillary Armour Material										
	36	Capillary Type	Capillary Length									
	37	Flush Ring Material										
	38	Flushing Conn. Size	No of Connections									
	39											
	40											
OPTIONS	41	Integral Meter	Scale			Yes			Digital display			
	42	Mounting Brackets				SST Mounting Bracket for 2-in. pipe mounting						
	43											
	44											
	45											
COMMUNICATION	46	Communication Type / Output				Digital signal based on HART protocol, 4-20 mA						
	47	Power Supply				24 VDC Loop Power						
	48											
	49											
PURCHASE	50	Manufacturer				Rosemount						
	51	Model				3051CG5A03A1AK6S5Q4M5						
	52	Purchase Order Number										
	53	Price										
	54	CRN Number				0F0792.2						

Notes: See Notes Page

No.	By	Date	Revision

INSTRUMENT SPECIFICATION
Pressure Transmitter
Code:331

Instr. Chk	Process Chk	Appr.

Sheet : of :

Dwg. No.: FER-002.1102039085-J-DSH-PIT-01-1610C-01 Rev.:

Project: CONVENTIONAL RED DEER / FERRIER - 11-02 GATHERING SYSTEM / 002 - LIQUID EXTRACTION PLANT - SHALLOW CUT

GENERAL	1	P&ID Number	Tag Number	5B1108-02-DR-00-001	002-PIT -01-1610C
	2	Service		V-01-1610 CARD GAS SEP	

Notes:

				INSTRUMENT SPECIFICATION Pressure Transmitter Code:331		
				Instr. Chk	Process Chk	Appr.
						Sheet of
No.	By	Date	Revision	Dwg. No.: FER-002.1102039085-J-DSH-PIT-01-1610C-01		Rev.:

Project: CONVENTIONAL RED DEER / FERRIER - 11-02 GATHERING SYST / 002 - LIQUID EXTRACTION PLANT

GENERAL	1	P&ID Number	Tag Number	5B1108-02-DR-00-001	002-PSV -01-1610E		
	2	Service		V-01-1610 CARD GAS SEP			
	3	Line Number	Equipment Number	168-PG-A11-01341	002-V-01-1610		
	4	Nozzle (Full, Semi)					
	5	Design	Safety, Relief, Safety-Relief	Safety-Relief			
	6	Type	Conventional, Bellow, Pilot Operated				
	7	Bonnet Type					
	8	Ambient Temp. Range	Location	-450°F to 1500°F	FIELD (INSIDE)		
PROCESS CONDITIONS	9	Fluid	State	Gas/Condensate	Gas/Vapor		
	10	Required Capacity		71668 kg/h			
	11	Molecular Mass		22.1			
	12	Oper. Pressure	Set Pressure	116 psi-g	200 psi-g		
	13	Oper. Temperature	RelievingTemperature	53 °C	53 °C		
	14	Back Pressure	Constant				
	15		Variable				
	16		Total				
	17	% Allowable Overpressure		10			
	18	Overpressure Factor		0.973			
	19	Compressibility Factor					
	20	Latent Heat of Vaporization		kcal IT/kg			
	21	Specific Heat Ratio					
	22	Relief Density		613 kg/m³			
	23	Relief Viscosity		0.21 cP			
	24	Barometric Pressure		13.04 kPa			
	25	Rupture Disk at Inlet	Coefficient	No			
	26	Design Pressure	Design Temperature	1379 kPa-g	-45 °C		
BASIS AND SELECTION	27	Design Code		ASME VIII			
	28	Sizing Basis		Non-Fire Case			
	29						
	30	Calculated Area		9.89 in²			
	31	Selected Area		12.85 in²			
	32	Orifice Designation	Calculated Capacity	Q Orifice	71668 kg/h		
	33	Selected Valve Capacity		71668 kg/hr			
	34						
CONNECTIONS	35	Size: Inlet	Outlet	6 in	8 in		
	36	Rating / Facing	Rating / Facing	Class 150	Class 150		
MATERIALS	37	Body and Bonnet		SA215 WCC Carbon Steel			
	38	Nozzle and Disc		316 SS			
	39	Resilient Seat Seal					
	40	Guide and Rings		316 SS			
	41	Spring		Alloy Steel (0546CR)			
	42	Bellows		Yes			
	43						
	44						
OPTIONS	45	Cap: Screwed or Bolted		Screwed			
	46	Lever: Plain or Packed		Plain			
	47	Test Gag					
	48						
	49						
PURCHASE	50	Manufacturer		Consolidated			
	51	Model		1905-30QC-2-CC-MS-31-RF-GS-HP			
	52	Purchase Order Number					
	53	Price					
	54	CRN Number					

Notes: See Notes Page

No.	By	Date	Revision

INSTRUMENT SPECIFICATION
Pressure Safety Valve
Code: 121

Instr. Chk	Process Chk	Appr.

Sheet of

Dwg. No.: FER-002.1102039085-J-DSH-PSV-01-1610E-01 Rev.:

Project: CONVENTIONAL RED DEER / FERRIER - 11-02 GATHERING SYSTEM / 002 - LIQUID EXTRACTION PLANT - SHALLOW CUT

GENERAL	1	P&ID Number	Tag Number	5B1108-02-DR-00-001	002-SC -01-1610
	2	Service		V-01-1610 PROD GAS TO CMPR	
	3	Line Number	Equipment Number	324-PG-A11-01339	002-V-01-1610
	4		Location	LSD: 11-02-039-08 W5M	FIELD (INSIDE)
	5				
	6				
	7				
	8				
	9				
	10				
	11				
	12				
	13				
	14				
	15				
	16				
	17				
	18				
	19				
	20				
	21				
	22				
	23				
	24				
	25				
	26				
	27				
	28				
	29				
	30				
	31				
	32				
	33				
	34				
	35				
	36				
	37				
	38				
	39				
	40				
	41				
	42				
	43				
	44				
	45				
	46				
	47				
	48				
	49				
PURCHASE	50	Manufacturer		Balon	
	51	Model		LM-10361	
	52	Purchase Order Number			
	53	Price			
	54	CRN Number			

Notes: See Notes Page

No.	By	Date	Revision

INSTRUMENT SPECIFICATION

Custom Datasheet
Code: 999

Instr. Chk	Process Chk	Appr.

Sheet : of :

Dwg. No.: FER-002.1102039085-J-DSH-SC-01-1610-01 Rev.:

Project: CONVENTIONAL RED DEER / FERRIER - 11-02 GATHERING SYST / 002 - LIQUID EXTRACTION PLANT

GENERAL				
	1	P&ID Number	Tag Number	5B1108-02-DR-00-001	002-SC -01-1610
	2	Service		V-01-1610 PROD GAS TO CMPR	

Notes:

				INSTRUMENT SPECIFICATION Custom Datasheet Code:999		
				Instr. Chk	Process Chk	Appr.
						Sheet of
No.	By	Date	Revision	Dwg. No.: FER-002.1102039085-J-DSH-SC-01-1610-01		Rev.:

Project: CONVENTIONAL RED DEER / FERRIER - 11-02 GATHERING SYST / 002 - LIQUID EXTRACTION PLANT

GENERAL	1	P&ID Number	Tag Number	5B1108-02-DR-00-001	002-SC -01-1610A
	2	Service		V-01-1610 COND TO COND STBLZ	
	3	Line Number	Equipment Number	60-PL-A11-01310	002-V-01-1610
	4		Location	LSD: 11-02-039-08 W5M	FIELD (INSIDE)
	5				
	6				
	7				
	8				
	9				
	10				
	11				
	12				
	13				
	14				
	15				
	16				
	17				
	18				
	19				
	20				
	21				
	22				
	23				
	24				
	25				
	26				
	27				
	28				
	29				
	30				
	31				
	32				
	33				
	34				
	35				
	36				
	37				
	38				
	39				
	40				
	41				
	42				
	43				
	44				
	45				
	46				
	47				
	48				
	49				
PURCHASE	50	Manufacturer		Balon	
	51	Model		LM-10361	
	52	Purchase Order Number			
	53	Price			
	54	CRN Number			

Notes: See Notes Page

No.	By	Date	Revision

INSTRUMENT SPECIFICATION

Custom Datasheet
Code: 999

Instr. Chk	Process Chk	Appr.

Sheet : of :

Dwg. No.: FER-002.1102039085-J-DSH-SC-01-1610A-01 Rev.:

Project: CONVENTIONAL RED DEER / FERRIER - 11-02 GATHERING SYST / 002 - LIQUID EXTRACTION PLANT

GENERAL	1	P&ID Number	Tag Number	5B1108-02-DR-00-001	002-SC -01-1610A
	2	Service		V-01-1610 COND TO COND STBLZ	

Notes:

				INSTRUMENT SPECIFICATION Custom Datasheet Code:999		
				Instr. Chk	Process Chk	Appr.
						Sheet of
No.	By	Date	Revision	Dwg. No.: FER-002.1102039085-J-DSH-SC-01-1610A-01		Rev.:

Project: CONVENTIONAL RED DEER / FERRIER - 11-02 GATHERING SYST / 002 - LIQUID EXTRACTION PLANT

GENERAL	1	P&ID Number	Tag Number	5B1108-02-DR-00-001	002-TE -01-1610			
	2	Service		V-01-1610 PROD GAS TO CMPR				
	3	Line Number	Equipment Number	324-PG-A11-01339		002-V-01-1610		
	4	Line Size	Line Schedule	12 in		STD		
	5	Area Classification	Location	Class 1 Division 2		FIELD		
	6	Ambient Temperature Range		-40 to 80 °C				
	7							
PROCESS CONDITIONS	8	Fluid	State	Produced gas		Gas/Vapor		
	9	Temperature	Min. / Oper. / Max.	23 °C	43 °C	53 °C		
	10	Oper. Pressure	Max. Pressure	700 kPa-g		800 kPa-g		
	11	Oper. Flow	Max. Flow	1415842 AMm³/d		1415842 AMm³/d		
	12	Oper. Velocity	Max. Velocity	25 m/s		26 m/s		
	13	Design Pressure	Design Temperature	1379 kPa-g		-29 °C		
	14	Oper. Density	Oper. SG / Mol. Mass	6.83 kg/m³		0.77		
	15	Viscosity	Compressibility	0.012 cP		0.973		
	16	Vibrations	Erosion / Oxidizing Atm.	Yes				
	17							
ELEMENT	18	Type		Spring-loaded style				
	19	T/C	ISA Type					
	20	T/C	Epoxy. / Ground / Unground					
	21							
	22	RTD	Material / Resistance	Platinum		250 ohms		
	23	RTD	Wire Material/Gauge	Copper, 22-ga				
	24							
	25	Single/Double/Other	Diameter	Single		1/4 in		
	26	Sheath Material	Coating	316 SST		Nickle		
	27							
HEAD	28	Type		Flat cover				
	29	Material	Enclosure	Low copper Aluminium		CSA Explosion proof		
	30	Terminal Block	Conduit Connection	6 terminals		1/2–14 NPT		
	31	Extension Type and Material		Nipple Union, SST				
	32	Nipple Size / Union / Nipple Union Length		N/A	N/A	3 in		
	33	Spring Loaded		Yes				
	34							
THERMOWELL	35	Thermowell Tag Number		TW-1610				
	36	Process Connection		1-11.5 ANPT				
Line 42	37	Construction Type		Threaded				
	38	Well Material		Type 316 SST				
U	39	Flange Material	Flange Welding			Full Penetration		
	40	Internal Connection	Bore Diameter					
	41	Insertion Length (U)	Flange Standoff (FS)	8"				
	42	Length - Bottom of Thread/SW/Flange to Top		2.25"				
	43	Overall Length (line 42 + U)		10.25 in				
Line 42	44	Tip Diameter	Tip Thickness					
	45	Root Diameter						
FS U	46	Vibration Calculation Result						
	47	Treatments	Finish					
	48	Stamping	Plug & Chain					
	49	Thermowell Model Number						
PURCHASE	50	Manufacturer		Rosemount				
	51	Model		0068R21C30A080T28E6				
	52	Purchase Order Number						
	53	Price						
	54	CRN Number						

Notes: See Notes Page

No.	By	Date	Revision

INSTRUMENT SPECIFICATION
Temperature Element
Code:342

Instr. Chk	Process Chk	Appr.

Sheet : of :

Dwg. No.: FER-002.1102039085-J-DSH-TE-01-1610-01 Rev.:

Project: CONVENTIONAL RED DEER / FERRIER - 11-02 GATHERING SYSTEM / 002 - LIQUID EXTRACTION PLANT - SHALLOW CUT

GENERAL	1	P&ID Number	Tag Number	5B1108-02-DR-00-001	002-TE -01-1610
	2	Service		V-01-1610 PROD GAS TO CMPR	

Notes:

				INSTRUMENT SPECIFICATION Temperature Element Code:342		
				Instr. Chk	Process Chk	Appr.
No.	By	Date	Revision	Dwg. No.: FER-002.1102039085-J-DSH-TE-01-1610-01		Rev.:

Sheet : of :

Project: CONVENTIONAL RED DEER / FERRIER - 11-02 GATHERING SYST / 002 - LIQUID EXTRACTION PLANT

GENERAL	1	P&ID Number	Tag Number		5B1108-02-DR-00-001		002-TG -01-1610B	
	2	Service			V-01-1610 CARD GAS SEP			
	3	Line Number	Equipment Number		TNK/VESL NZZL 2" 300		002-V-01-1610	
	4	Area Classification	Location		Class 1 Division 2		FIELD	
	5	Ambient Temperature Range			-20°C to 60°C			
	6							
PROCESS CONDITIONS	7	Fluid	State				Gas/Vapor	
	8	Temperature	Min.	Oper.	23 ºC	43 ºC	53 ºC	Max.
	9	Oper. Pressure	Max. Pressure		700 kPa-g		800 kPa-g	
	10	Oper. Flow	Max. Flow		1415842 AMm³/d		1415842 AMm³/d	
	11	Oper. Velocity	Max. Velocity		25 m/s		26 m/s	
	12	Design Pressure	Design Temperature		1379 kPa-g		-29 ºC	
	13	Oper. Density / SG / Molecular Mass			6.83			
	14	Viscosity	Compressibility		0.012 cP		0.973	
	15	Vibrations	Erosion	Oxidizing Atm.				
	16							
THERMOMETER	17	Type			Direct reading			
	18	Range			-38 TO 538 Celsius			
	19	Dial Size	Dial Color		5 in		White	
	20	Case Material	Hermetically Sealed		304 SS		Yes	
	21	Stem Type	Stem Material		Adjustable angle		304 SS	
	22	Stem/Union Thread	Stem Position		1/2 NPT in		Back	
	23	Stem Length	Stem Diameter		14 in		1/4 in	
	24	Sheath Material	Coating					
	25	External Calibrator						
	26							
	27	FILLED SYSTEM	Type					
	28		Compensation					
	29		Capilliary Length					
	30		Capilliary Material					
	31		Armor Material					
	32		Bulb Diameter	Bulb Length				
	33		Bulb Type					
	34		Bulb Connection					
THERMOWELL	35	Thermowell Tag Number			TW-1610B			
Line 42	36	Process Connection			2" CL300 RF			
	37	ConstructionType			Tapered			
	38	Well Material			316 SS			
U	39	Flange Material	Flange Welding		316 SS			
	40	Internal Connection	Bore Diameter					
	41	Insertion Length (U)	Flange Standoff (FS)		12"			
	42	Length - Bottom of Thread/SW/Flange to Top			14.25"			
	43	Overal Length (line 42 + U)			16.25 in			
Line 42	44	Tip Diameter	Tip Thickness					
	45	Root Diameter						
FS U	46	Vibration Calculation Results			N/A			
	47	Treatments	Finish					
	48	Stamping	Plug & Chain					
	49	Thermowell Model Number			N/A			
PURCHASE	50	Manufacturer			Wika			
	51	Model			TI.52			
	52	Purchase Order Number						
	53	Price						
	54	CRN Number			0F02026.2			

Notes: See Notes Page

No.	By	Date	Revision

INSTRUMENT SPECIFICATION
Thermometer
Code:841

Instr. Chk	Process Chk	Appr.

Sheet : of :

Dwg. No.: FER-002.1102039085-J-DSH-TG-01-1610B-01 Rev.:

GENERAL	1	P&ID Number	Tag Number	5B1108-02-DR-00-001	002-TG -01-1610B
	2	Service		V-01-1610 CARD GAS SEP	

Notes:

				INSTRUMENT SPECIFICATION Thermometer Code:841		
				Instr. Chk	Process Chk	Appr.
						Sheet : of :
No.	By	Date	Revision	Dwg. No.: FER-002.1102039085-J-DSH-TG-01-1610B-01		Rev.:

Project: CONVENTIONAL RED DEER / FERRIER - 11-02 GATHERING SYST / 002 - LIQUID EXTRACTION PLANT

GENERAL	1	P&ID Number	Tag Number	5B1108-02-DR-00-001		002-TIT -01-1600
	2	Service		CARD GAS SEP PKG		
	3	Line Number	Equipment Number	---	002-PK-01-1600	
	4	Line Size	Line Schedule			
	5	Area Classification	Location	Class 1, Division 2	FIELD (INSIDE)	
	6	Ambient Temperature Range		-40 to 185 °F (-40 to 85 °C)		
	7					
PROCESS CONDITIONS	8	Fluid	State		Gas/Vapor	
	9	Temperature	Min. Oper. Max.	23 ºC	43 ºC	53 ºC
	10	Oper. Pressure	Max. Pressure	700 kPa-g	800 kPa-g	
	11	Oper. Flow	Max. Flow			
	12	Oper. Velocity	Max. Velocity	m/s	m/s	
	13	Design Pressure	Design Temperature	1379 kPa-g	-29 ºC	
	14	Oper. Density	Molecular Mass	6.83 kg/m³		
	15	Oper. Viscosity		0.012 cP		
	16	Vibrations	Erosive Oxidizing	Yes		
	17					

ELEMENT	18	Element Tag No.		002-TIR-01-1600	HEAD	55	Head Type	DIN A Head
	19	Element Type		Spring loaded style		56	Material	Aluminium
	20	T/C	ISA Type			57	Enclosure	
	21		Epoxy			58	Terminal Block	
	22		Ground Unground			59	Conduit Connection	
	23					60	Ext.Type and Material	N/A
	24	RTD	Material	Platinum		61	Nipple Size	N/A
	25		Resistance	250 ohms		62	Union	N/A
	26		Wire Matl/Gauge	Copper/ 22-ga		63	Nipple Union Length	N/A
	27					64	Spring Loaded	Yes
	28	Single/Double/Other		Single		65		
	29	Diameter		1/4 in	TRANSMITTER	66	Transmitter Type	Temperature
	30	Sheath Material		316 SST. / 321 SST.		67	TE Types Supported	
	31	Coating		Nickle		68	Cold Junction Comp.	
	32					69	Enclosure	
	33	Element Model No.		0068R21N00N06E6		70	Housing Material	Aluminum
WELL	34	Thermowell Tag No.		Not Required		71	Power Supply	12.0 to 42.4 Vdc
	35	Process Connection				72	Electrical Connection	
Line 44	36	Construction Type				73	Accuracy	±0.15 °C
	37	Well Material				74	Response Time	
	38	Flange Material				75	Linearization of Output	4–20 mA
U	39	Flange Welding		Full Penetration		76	Range Limits	TO
	40	Internal Connection				77	Calibrated Range	TO
	41	Bore Diameter				78	Communication Type	
	42	Insertion Length (U)				79	Configuration From	
	43	Flange Standoff (FS)				80	Internal Diagnostics	
	44	Thread/Flange to Top				81	Integral Indicator	
	45	Overall Length (44+U)				82	Indicator Scale	
	46	Tip Diameter				83	Custom Configuration	
Line 44	47	Tip Thickness				84	Mounting Bracket	
	48	Root Diameter				85		
FS U	49	Vibration Calc. Result				86		
	50	Plug & Chain			PURCHASE	87	Manufacturer	Rosemount
	51	Treatments				88	Model	644HAK6J6M5F6
	52	Finish	Stamping			89	Purchase Order No.	
	53					90	Price	
	54	Thermowell Model No.				91	CRN Number	

Notes: See Notes Page

No.	By	Date	Revision

INSTRUMENT SPECIFICATION
Temp Transmitter/Element/Well
Code: 344

Instr. Chk	Process Chk	Approved

Sheet of

Dwg No: FER-002.1102039085-J-DSH-TIT-01-1600-01 Rev.:

Project: CONVENTIONAL RED DEER / FERRIER - 11-02 GATHERING SYSTEM / 002 - LIQUID EXTRACTION PLANT - SHALLOW CUT

GENERAL	1	P&ID Number	Tag Number	5B1108-02-DR-00-001	002-TIT -01-1600
	2	Service		CARD GAS SEP PKG	

Notes:

				INSTRUMENT SPECIFICATION Temp Transmitter/Element/Well Code:344		
				Instr. Chk	Process Chk	Appr.
No.	By	Date	Revision	Dwg. No.: FER-002.1102039085-J-DSH-TIT-01-1600-01		Rev.:

Sheet : of :

Project: CONVENTIONAL RED DEER / FERRIER - 11-02 GATHERING SYST / 002 - LIQUID EXTRACTION PLANT

GENERAL	1	P&ID Number	Tag Number	5B1108-02-DR-00-001	002-TIT -01-1610A		
	2	Service		V-01-1610 CARD GAS SEP			
	3	Line Number	Equipment Number	TNK/VESL NZZL 2" 300	002-V-01-1610		
	4	Line Size	Line Schedule				
	5	Area Classification	Location	Class 1 Division 2	FIELD		
	6	Ambient Temperature Range		-40 to 80 °C			
	7						
PROCESS CONDITIONS	8	Fluid	State		Liquid		
	9	Temperature	Min. / Oper. / Max.	23 °C	43 °C	53 °C	
	10	Oper. Pressure	Max. Pressure	700 kPa-g	800 kPa-g		
	11	Oper. Flow	Max. Flow				
	12	Oper. Velocity	Max. Velocity	m/s	m/s		
	13	Design Pressure	Design Temperature	1379 kPa-g	-29 °C		
	14	Oper. Density	Molecular Mass	1016 kg/m³			
	15	Oper. Viscosity		1.19 cP			
	16	Vibrations	Erosive / Oxidizing	Yes			
	17						

ELEMENT	18	Element Tag No.	TE-1610A	HEAD	55	Head Type	Flat cover
	19	Element Type	Spring-loaded style		56	Material	Low copper Aluminium
	20	T/C	ISA Type		57	Enclosure	Class 1 Division 2
	21		Epoxy		58	Terminal Block	6 terminals
	22		Ground / Unground		59	Conduit Connection	1/2–14 NPT
	23				60	Ext.Type and Material	Nipple Union, SST
	24	RTD	Material	Platinum	61	Nipple Size	N/A
	25		Resistance	250 ohms	62	Union	N/A
	26		Wire Matl/Gauge	Copper/ 22 ga	63	Nipple Union Length	3 in
	27				64	Spring Loaded	Yes
	28	Single/Double/Other		Single	65		
	29	Diameter		1/4 in	TRANSMITTER	66	Transmitter Type	Temperature
	30	Sheath Material		316 SST. / 321 SST.		67	TE Types Supported	RTDs, T/C
	31	Coating		Nickle		68	Cold Junction Comp.	
	32					69	Enclosure	Type 4X / IP66 & IP68
	33	Element Model No.		0068R21C30A120F80E6		70	Housing Material	Aluminium
WELL	34	Thermowell Tag No.		TW-1610A		71	Power Supply	500 Vdc
	35	Process Connection		2" CL300 RF		72	Electrical Connection	50/60 Hz
Line 44	36	Construction Type		Flange		73	Accuracy	±0.02% of span
	37	Well Material		316 SST		74	Response Time	0.5 seconds
	38	Flange Material		316 SST		75	Linearization of Output	4-20 mA
U	39	Flange Welding		Full Penetration		76	Range Limits	TO
	40	Internal Connection		3/4 NPT		77	Calibrated Range	TO
	41	Bore Diameter				78	Communication Type	Electrical
	42	Insertion Length (U)		12"		79	Configuration From	
	43	Flange Standoff (FS)				80	Internal Diagnostics	
	44	Thread/Flange to Top		2.25"		81	Integral Indicator	
	45	Overall Length (44+U)		14.25 in		82	Indicator Scale	
	46	Tip Diameter				83	Custom Configuration	
Line 44	47	Tip Thickness				84	Mounting Bracket	U mounting bracket for 2"
	48	Root Diameter				85		pipe and panel mounting
FS U	49	Vibration Calc. Result		N/A		86		
	50	Plug & Chain		N/A	PURCHASE	87	Manufacturer	Rosemount
	51	Treatments		N/A		88	Model	3144PD1A1K6B4M5Q4
	52	Finish	Stamping			89	Purchase Order No.	
	53					90	Price	
	54	Thermowell Model No.				91	CRN Number	

Notes: See Notes Page

No.	By	Date	Revision

INSTRUMENT SPECIFICATION
Temp Transmitter/Element/Well
Code: 344

Instr. Chk	Process Chk	Approved

Sheet of

Dwg No: FER-002.1102039085-J-DSH-TIT-01-1610A-01 Rev.:

Project: CONVENTIONAL RED DEER / FERRIER - 11-02 GATHERING SYSTEM / 002 - LIQUID EXTRACTION PLANT - SHALLOW CUT

GENERAL	1	P&ID Number	Tag Number	5B1108-02-DR-00-001	002-TIT -01-1610A
	2	Service		V-01-1610 CARD GAS SEP	

Notes:

				INSTRUMENT SPECIFICATION Temp Transmitter/Element/Well Code:344		
				Instr. Chk	Process Chk	Appr.
						Sheet of
No.	By	Date	Revision	Dwg. No.: FER-002.1102039085-J-DSH-TIT-01-1610A-01		Rev.:

Project: CONVENTIONAL RED DEER / FERRIER - 11-02 GATHERING SYST / 002 - LIQUID EXTRACTION PLANT

GENERAL	1	P&ID Number		Tag Number		5B1108-02-DR-00-001		002-TIT -01-1610D					
	2	Service				V-01-1610 COND TO COND STBLZ							
	3	Line Number		Equipment Number		60-PL-A11-01310		002-V-01-1610					
	4	Line Size		Line Schedule		2 in		80					
	5	Area Classification		Location		Class 1 Division 2		FIELD					
	6	Ambient Temperature Range				-40 to 80 °C							
	7												
PROCESS CONDITIONS	8	Fluid		State		Condensate		Liquid					
	9	Temperature	Min.	Oper.	Max.	23 °C		43 °C		53 °C			
	10	Oper. Pressure		Max. Pressure		700 kPa-g		800 kPa-g					
	11	Oper. Flow		Max. Flow									
	12	Oper. Velocity		Max. Velocity		m/s		m/s					
	13	Design Pressure		Design Temperature		1379 kPa-g		-29 °C					
	14	Oper. Density		Molecular Mass		1016 kg/m³							
	15	Oper. Viscosity				1.19 cP							
	16	Vibrations	Erosive		Oxidizing	Yes							
	17												
ELEMENT	18	Element Tag No.		TE-1610D		HEAD	55	Head Type		Flat cover			
	19	Element Type		Spring-loaded style			56	Material		Low copper Aluminium			
	20	T/C	ISA Type				57	Enclosure		Class 1 Division 2			
	21		Epoxy				58	Terminal Block		6 terminals			
	22		Ground	Unground			59	Conduit Connection		1/2–14 ANPT			
	23						60	Ext.Type and Material		Nipple Union, SST			
	24	RTD	Material				61	Nipple Size		N/A			
	25		Resistance				62	Union		N/A			
	26		Wire Matl/Gauge				63	Nipple Union Length		3 in			
	27						64	Spring Loaded		Yes			
	28	Single/Double/Other		Single			65						
	29	Diameter		1/4 in		TRANSMITTER	66	Transmitter Type		Temperature			
	30	Sheath Material		316 SST. / 321 SST.			67	TE Types Supported		RTDs, T/C			
	31	Coating		Nickle			68	Cold Junction Comp.					
	32						69	Enclosure		Type 4X / IP66 & IP68			
	33	Element Model No.		0068R21C30A120F80E6			70	Housing Material		Aluminium			
WELL	34	Thermowell Tag No.		TW-1610D			71	Power Supply		500 Vdc			
	35	Process Connection		2" CL300 RF			72	Electrical Connection		50/60 Hz			
Line 44	36	Construction Type		Flange			73	Accuracy		±0.02% of span			
	37	Well Material		316 SST			74	Response Time		0.5 seconds			
	38	Flange Material		316 SST			75	Linearization of Output		4-20 mA			
U	39	Flange Welding		Full Penetration			76	Range Limits		TO			
	40	Internal Connection		3/4 NPT			77	Calibrated Range		TO			
	41	Bore Diameter					78	Communication Type		Electrical			
	42	Insertion Length (U)		12"			79	Configuration From					
	43	Flange Standoff (FS)					80	Internal Diagnostics					
	44	Thread/Flange to Top		2.25"			81	Integral Indicator					
	45	Overall Length (44+U)		14.25 in			82	Indicator Scale					
	46	Tip Diameter					83	Custom Configuration					
Line 44	47	Tip Thickness					84	Mounting Bracket		U mounting bracket			
	48	Root Diameter					85						
FS U	49	Vibration Calc. Result		N/A			86						
	50	Plug & Chain		N/A		PURCHASE	87	Manufacturer		Rosemount			
	51	Treatments		N/A			88	Model		3144PD1A1K6B4M5Q4			
	52	Finish	Stamping				89	Purchase Order No.					
	53						90	Price					
	54	Thermowell Model No.					91	CRN Number					

Notes: See Notes Page

No.	By	Date	Revision

INSTRUMENT SPECIFICATION
Temp Transmitter/Element/Well
Code:344

Instr. Chk	Process Chk	Approved

Sheet of

Dwg No: FER-002.1102039085-J-DSH-TIT-01-1610D-01 Rev.:

Project: CONVENTIONAL RED DEER / FERRIER - 11-02 GATHERING SYSTEM / 002 - LIQUID EXTRACTION PLANT - SHALLOW CUT

GENERAL				
	1	P&ID Number	Tag Number	5B1108-02-DR-00-001	002-TIT -01-1610D
	2	Service		V-01-1610 COND TO COND STBLZ	

Notes:

				INSTRUMENT SPECIFICATION Temp Transmitter/Element/Well Code:344		
				Instr. Chk	Process Chk	Appr.
No.	By	Date	Revision	Dwg. No.: FER-002.1102039085-J-DSH-TIT-01-1610D-01		Rev.:

Project: CONVENTIONAL RED DEER / FERRIER - 11-02 GATHERING SYST / 002 - LIQUID EXTRACTION PLANT

GENERAL	1	P&ID Number	Tag Number		5B1108-02-DR-00-001		002-TW -01-1610C		
	2	Service			V-01-1610 PROD GAS TO CMPR				
	3	Line Number	Equipment Number		324-PG-A11-01339		002-V-01-1610		
	4	Area Classification	Location		Class 1 Division 2		FIELD		
	5								
	6								
PROCESS CONDITIONS	7	Fluid	State		Produced gas		Gas/Vapor		
	8	Temperature	Min.	Oper. / Max.	23	ºC	43 / 53	ºC	ºC
	9	Thermal Shock							
	10	Oper. Pressure	Max. Pressure		700	kPa-g	800	kPa-g	
	11	Oper. Flow	Max. Flow		1415842	AMm³/d	1415842	AMm³/d	
	12	Oper. Velocity	Max. Velocity		25	m/s	26	m/s	
	13	Design Pressure	Design Temperature		1379	kPa-g	-29	ºC	
	14	Oper. Density / SG / Molecular Mass			22.1	MM			
	15	Viscosity	Compressibility		0.012	cP	0.973		
	16	Vibrations	Erosion	Oxidizing Atm.	Yes		No		
	17								
	18								
THERMOWELL (Line 26 / U / FS)	19	Process Connection			1"				
	20	Construction Type			Tapered				
	21	Well Material			316 SS				
	22	Flange Material	Flange Welding		N/A				
	23	Sheath Material	Coating		N/A		No		
	24	Internal Connection	Bore Diameter		1/2"				
	25	Insertion Length (U)	Flange Standoff (FS)		9"				
	26	Length - Bottom of Thread/SW/Flange to Top			1.75"				
	27	Overall Length (line 26 + U)			10.75	in			
	28	Tip Diameter							
	29	Tip Thickness							
	30	Root Diameter							
	31	Tapered Length							
	32	Vibration Calculation Result							
	33								
	34								
OPTIONS	35	Plug & Chain			Hex plug				
	36	Treatment			No				
	37	Finish			Stainless				
	38	Stamping			No				
	39	Back-Up Flange			No				
	40	Weldolet Fitting			N/A				
	41								
	42								
	43								
	44								
PURCHASE	45	Manufacturer			Wika				
	46	Model							
	47	Purchase Order Number							
	48	Price							
	49	CRN Number							

Notes: See Notes Page

No.	By	Date	Revision

INSTRUMENT SPECIFICATION
Thermowell
Code:241

Instr. Chk	Process Chk	Appr.

Sheet of

Dwg. No.: FER-002.1102039085-J-DSH-TW-01-1610C-01 Rev.:

Project: CONVENTIONAL RED DEER / FERRIER - 11-02 GATHERING SYSTEM / 002 - LIQUID EXTRACTION PLANT - SHALLOW CUT

GENERAL					
	1	P&ID Number	Tag Number	5B1108-02-DR-00-001	002-TW -01-1610C
	2	Service		V-01-1610 PROD GAS TO CMPR	

Notes:

				INSTRUMENT SPECIFICATION Thermowell Code:241		
				Instr. Chk	Process Chk	Appr.
						Sheet of
No.	By	Date	Revision	Dwg. No.: FER-002.1102039085-J-DSH-TW-01-1610C-01		Rev.:

Project: CONVENTIONAL RED DEER / FERRIER - 11-02 GATHERING SYST / 002 - LIQUID EXTRACTION PLANT

GENERAL	1	P&ID Number	Tag Number	5B1108-02-DR-00-001	002-XA -01-1600
	2	Service		CARD GAS SEP PKG	
	3	Line Number	Equipment Number	---	002-PK-01-1600
	4		Location	LSD: 11-02-039-08 W5M	FIELD (INSIDE)
	5				
	6				
	7				
	8				
	9				
	10				
	11				
	12				
	13				
	14				
	15				
	16				
	17				
	18				
	19				
	20				
	21				
	22				
	23				
	24				
	25				
	26				
	27				
	28				
	29				
	30				
	31				
	32				
	33				
	34				
	35				
	36				
	37				
	38				
	39				
	40				
	41				
	42				
	43				
	44				
	45				
	46				
	47				
	48				
	49				
PURCHASE	50	Manufacturer		Federal Signal Corp.	
	51	Model		151XST-120A	
	52	Purchase Order Number			
	53	Price			
	54	CRN Number			

Notes: See Notes Page

				INSTRUMENT SPECIFICATION		
				Custom Datasheet Code: 999		
				Instr. Chk	Process Chk	Appr.
						Sheet of
No.	By	Date	Revision	Dwg. No.: FER-002.1102039085-J-DSH-XA-01-1600-01		Rev.:

Project: CONVENTIONAL RED DEER / FERRIER - 11-02 GATHERING SYST / 002 - LIQUID EXTRACTION PLANT

GENERAL					
	1	P&ID Number	Tag Number	5B1108-02-DR-00-001	002-XA -01-1600
	2	Service		CARD GAS SEP PKG	

Notes:

				INSTRUMENT SPECIFICATION Custom Datasheet Code:999		
				Instr. Chk	Process Chk	Appr.
						Sheet of
No.	By	Date	Revision	Dwg. No.: FER-002.1102039085-J-DSH-XA-01-1600-01		Rev.:

Project: CONVENTIONAL RED DEER / FERRIER - 11-02 GATHERING SYST / 002 - LIQUID EXTRACTION PLANT

GENERAL	1	P&ID Number	Tag Number	5B1108-02-DR-00-001	002-XA -01-1600A
	2	Service		CARD GAS SEP PKG	
	3	Line Number	Equipment Number	---	002-PK-01-1600
	4		Location	LSD: 11-02-039-08 W5M	FIELD (INSIDE)
	5				
	6				
	7				
	8				
	9				
	10				
	11				
	12				
	13				
	14				
	15				
	16				
	17				
	18				
	19				
	20				
	21				
	22				
	23				
	24				
	25				
	26				
	27				
	28				
	29				
	30				
	31				
	32				
	33				
	34				
	35				
	36				
	37				
	38				
	39				
	40				
	41				
	42				
	43				
	44				
	45				
	46				
	47				
	48				
	49				
PURCHASE	50	Manufacturer		Federal Signal Corp.	
	51	Model		151XST-120R	
	52	Purchase Order Number			
	53	Price			
	54	CRN Number			

Notes: See Notes Page

				INSTRUMENT SPECIFICATION		
				Custom Datasheet Code: 999		
				Instr. Chk	Process Chk	Appr.
						Sheet of
No.	By	Date	Revision	Dwg. No.: FER-002.1102039085-J-DSH-XA-01-1600A-01		Rev.:

Project: CONVENTIONAL RED DEER / FERRIER - 11-02 GATHERING SYST / 002 - LIQUID EXTRACTION PLANT

GENERAL					
	1	P&ID Number	Tag Number	5B1108-02-DR-00-001	002-XA -01-1600A
	2	Service		CARD GAS SEP PKG	

Notes:

				INSTRUMENT SPECIFICATION Custom Datasheet Code:999		
				Instr. Chk	Process Chk	Appr.
						Sheet of
No.	By	Date	Revision	Dwg. No.: FER-002.1102039085-J-DSH-XA-01-1600A-01		Rev.:

Project: CONVENTIONAL RED DEER / FERRIER - 11-02 GATHERING SYST / 002 - LIQUID EXTRACTION PLANT

GENERAL	1	P&ID Number	Tag Number	5B1108-02-DR-00-001	002-XA -01-1600B
	2	Service		CARD GAS SEP PKG	
	3	Line Number	Equipment Number	---	002-PK-01-1600
	4		Location	LSD: 11-02-039-08 W5M	FIELD (INSIDE)
	5				
	6				
	7				
	8				
	9				
	10				
	11				
	12				
	13				
	14				
	15				
	16				
	17				
	18				
	19				
	20				
	21				
	22				
	23				
	24				
	25				
	26				
	27				
	28				
	29				
	30				
	31				
	32				
	33				
	34				
	35				
	36				
	37				
	38				
	39				
	40				
	41				
	42				
	43				
	44				
	45				
	46				
	47				
	48				
	49				
PURCHASE	50	Manufacturer		Federal Signal Corp.	
	51	Model		151XST-120A	
	52	Purchase Order Number			
	53	Price			
	54	CRN Number			

Notes: See Notes Page

				INSTRUMENT SPECIFICATION		
				Custom Datasheet Code: 999		
				Instr. Chk	Process Chk	Appr.
						Sheet of
No.	By	Date	Revision	Dwg. No.: FER-002.1102039085-J-DSH-XA-01-1600B-01		Rev.:

Project: CONVENTIONAL RED DEER / FERRIER - 11-02 GATHERING SYST / 002 - LIQUID EXTRACTION PLANT

GENERAL					
	1	P&ID Number	Tag Number	5B1108-02-DR-00-001	002-XA -01-1600B
	2	Service		CARD GAS SEP PKG	

Notes:

				INSTRUMENT SPECIFICATION Custom Datasheet Code:999		
				Instr. Chk	Process Chk	Appr.
						Sheet of
No.	By	Date	Revision	Dwg. No.: FER-002.1102039085-J-DSH-XA-01-1600B-01		Rev.:

Project: CONVENTIONAL RED DEER / FERRIER - 11-02 GATHERING SYST / 002 - LIQUID EXTRACTION PLANT

GENERAL	1	P&ID Number	Tag Number	5B1108-02-DR-00-001	002-XA -01-1600C
	2	Service		CARD GAS SEP PKG	
	3	Line Number	Equipment Number	---	002-PK-01-1600
	4		Location	LSD: 11-02-039-08 W5M	FIELD (INSIDE)
	5				
	6				
	7				
	8				
	9				
	10				
	11				
	12				
	13				
	14				
	15				
	16				
	17				
	18				
	19				
	20				
	21				
	22				
	23				
	24				
	25				
	26				
	27				
	28				
	29				
	30				
	31				
	32				
	33				
	34				
	35				
	36				
	37				
	38				
	39				
	40				
	41				
	42				
	43				
	44				
	45				
	46				
	47				
	48				
	49				
PURCHASE	50	Manufacturer		Federal Signal Corp.	
	51	Model		151XST-120R	
	52	Purchase Order Number			
	53	Price			
	54	CRN Number			

Notes: See Notes Page

				INSTRUMENT SPECIFICATION		
				Custom Datasheet		
				Code: 999		
				Instr. Chk	Process Chk	Appr.
						Sheet of
No.	By	Date	Revision	Dwg. No.: FER-002.1102039085-J-DSH-XA-01-1600C-01		Rev.:

Project: CONVENTIONAL RED DEER / FERRIER - 11-02 GATHERING SYST / 002 - LIQUID EXTRACTION PLANT

GENERAL				
	1	P&ID Number	Tag Number	5B1108-02-DR-00-001	002-XA -01-1600C
	2	Service		CARD GAS SEP PKG	

Notes:

				INSTRUMENT SPECIFICATION Custom Datasheet Code:999			
				Instr. Chk	Process Chk	Appr.	Sheet of
No.	By	Date	Revision	Dwg. No.: FER-002.1102039085-J-DSH-XA-01-1600C-01			Rev.:

Project: CONVENTIONAL RED DEER / FERRIER - 11-02 GATHERING SYST / 002 - LIQUID EXTRACTION PLANT

GENERAL	1	P&ID Number	Tag Number	5B1108-02-DR-00-001	002-XA -01-1600D
	2	Service		CARD GAS SEP PKG	
	3	Line Number	Equipment Number	---	002-PK-01-1600
	4		Location	LSD: 11-02-039-08 W5M	FIELD (INSIDE)
	5				
	6				
	7				
	8				
	9				
	10				
	11				
	12				
	13				
	14				
	15				
	16				
	17				
	18				
	19				
	20				
	21				
	22				
	23				
	24				
	25				
	26				
	27				
	28				
	29				
	30				
	31				
	32				
	33				
	34				
	35				
	36				
	37				
	38				
	39				
	40				
	41				
	42				
	43				
	44				
	45				
	46				
	47				
	48				
	49				
PURCHASE	50	Manufacturer		Federal Signal Corp.	
	51	Model		300GCX-120 c/w UTM	
	52	Purchase Order Number			
	53	Price			
	54	CRN Number			

Notes: See Notes Page

				INSTRUMENT SPECIFICATION		
				Custom Datasheet		
				Code: 999		
				Instr. Chk	Process Chk	Appr.
						Sheet of
No.	By	Date	Revision	Dwg. No.: FER-002.1102039085-J-DSH-XA-01-1600D-01		Rev.:

Project: CONVENTIONAL RED DEER / FERRIER - 11-02 GATHERING SYST / 002 - LIQUID EXTRACTION PLANT

GENERAL					
	1	P&ID Number	Tag Number	5B1108-02-DR-00-001	002-XA -01-1600D
	2	Service		CARD GAS SEP PKG	

Notes:

				INSTRUMENT SPECIFICATION Custom Datasheet Code:999		
				Instr. Chk	Process Chk	Appr.
						Sheet of
No.	By	Date	Revision	Dwg. No.: FER-002.1102039085-J-DSH-XA-01-1600D-01		Rev.:

Project: CONVENTIONAL RED DEER / FERRIER - 11-02 GATHERING SYST / 002 - LIQUID EXTRACTION PLANT



E13 Instrument Calibration Test Record

2303-8th Street, Nisku Alberta, T9E-7Z3 CANADA

5Blue
Process Equipment Inc.

RECEIVING INSPECTION REPORT

DATE: FEB 2 1 2014 PURCHASE ORDER# SB1108-02

CUSTOMER/OWNER_____

DESCRIPTION OF MATERIAL:	PLATE	TUBE /PIPE	BAR	FITTINGS	

		YES	NO
1	MATERIALS CORRECT TO PURCHASE ORDER:	✓	
2	MTR SUPPLIED WITH MATERIALS	✓	
3	MTR CHECKED AGAINST PACKING SLIP	✓	
4	MTR CORRECT FOR THIS MATERIAL	✓	
5	IS MATERIALS IN GOOD CONDITION (NO DAMAGE):	✓	
6	IS MATERIAL THE SAME SIZE AND SCHEDULE AS REQUIRED ON THE PURCHASE ORDER:	✓	
7	IS MATERIAL THE CORRECT GRADE AS REQUIRED ON THE PURCHASE ORDER	✓	
8	IS THE MATERIAL LEGIBLY MARKED FROM THE SUPPLIER? THIS MAY BE STAMPED or STENCILED (record Grade, Type, Heat # And any other relevant information) ASME SECTION II EDITION 2013 ADDENDA 2013 (A)	✓	

5 Blue Process Equipment Inc. FEB 2 1 2014 Quality Department

NOTE: If any of these inspection steps cannot be completed the inspector shall notify the QS ASAP. The QS shall make out a NCR detailing the discrepancies and the material in question shall be quarantined until a satisfactory solution to the problem can be resolved. This may include rework or sending the material back to the supplier

Inspector JOELLE DERY-BROCHU QUALITY CONTROL (780)955-2040 E:241 Signature: _____ Date FEB 2 1 2014

GLOBAL MACHINE & SUPPLY INC.
6803 - 71 Street
Edmonton, Alberta
T6B 2M5

Phone: (780) 450-9757
Fax: (780) 450-0298

WORK ORDER No: 127025 **Rev No :** _____ **OPEN DATE :** 2/4/2014 **Order Entry Initial** SF

CUSTOMER: 5BLUE PROCESS EQUIPMENT **PRC No:** 127025

CUSTOMER P.O. No : P8818-5B1108-82 **DATE REQUIRED:** 2/5/2014

SECTION	QTY	DESCRIPTION	DRAWING REV. No	MATERIAL TYPE	HEAT NUMBER
A	1	2" 300 RF ORIFICE PLATE 3/8" THK C/W .351" ID		316L	UDA

RECEIVED FEB 18 2014

Mill Test Reports required for above item(s): yes ☐ no ☐

02/07/14

ORDER FULFILLMENT CONFIRMATION
(Above signature is required for all accurately "FILLED ORDERS" only.)

NOTE : The above signature is certification that the product(s), as indicated in the "DESCRIPTION", is produced in strict accordance to your Purchase Order Requirements.

SHIPPING INSTRUCTIONS VIA DUNRITE

SHIPPING RECORD

SECTION	QTY	INSPECTOR	SHIPPER	RECEIVER	DATE SHIPPED
A	1	02/07/14			

NOTE: The Inspector's signature in the "Shipping Record" is for partial shipments of nonstock items only. A separate sheet shall be attached if additional shipping records are required.

GLOBAL
MACHINE & SUPPLY INC.

6803-71 Street
Edmonton, Alberta
T6B 2M5

Phone: 780-450-9757
Fax: 780-450-0298

MILL TEST REPORT

Date: September 17, 2013

HEAT CODE: UDA

Description: Bleed Ring 2-300, 2-600; Spectacle Product 2-150; Orifice Plate 2-300
Material Designation: ASME SA182 316/316L
NACE: MR0175-2009/ISO 15156 & MR0103
Material Supplier: North American Stainless via ASA Alloys
Heat Number: H8L7
Work Order: Stock, 124616, 124711, 126041, 127028

CHEMICAL COMPOSITION %

C	Mn	P	S	Si	Cr	Mo	Ni	Cu	W	Nb	Co	N2	V	Ti	N
.0282	1.4905	.0285	.0245	.2570	16.6415	2.0430	10.5500	.3355	---	---	.2640	---	---	---	.0451

MECHANICAL PROPERTIES

Yield Strength (KSI)	Tensile Strength (KSI)	Elongation (%)	Reduction of Area (%)	Hardness (HB)	Charpy @ - 50□F (FT>LB)	Test Direction	C.E.
38.00	83.00	43.00	52.00	141.00	---		---

MISCELLANEOUS

Steelmaking Process:
Condition of Material: Solution annealed @ 1900'F min.
Grain Size:

Note: The information contained here is a copy of the information for the raw material provided to Global Machine & Supply Inc. for the above mentioned product.

Signed: _____
Quality Assurance Representative

BLUE CHIP SELECT VERIFIED BY: ASME SECTION II EDITION 2013 ADDENDA 2013 (A)

Blue Process Equipment Inc. Quality Department FEB 1 - 2014

Original Material: bar

ASME SA182 316/316L
Global P.O.: 22084
W.O.: Stock

C:\windows\desktop\global\qa.mtr

5Blue
Process Equipment Inc.

RECEIVING INSPECTION REPORT

DATE: FEB 19 2014 PURCHASE ORDER# 5B1108-82

CUSTOMER/OWNER Devon Rosemount RTD assembly.

DESCRIPTION OF MATERIAL:	PLATE	TUBE /PIPE	BAR	FITTINGS	

		YES	NO
1	MATERIALS CORRECT TO PURCHASE ORDER:	✓	
2	MTR SUPPLIED WITH MATERIALS		
3	MTR CHECKED AGAINST PACKING SLIP		
4	MTR CORRECT FOR THIS MATERIAL		
5	IS MATERIALS IN GOOD CONDITION (NO DAMAGE):		
6	IS MATERIAL THE SAME SIZE AND SCHEDULE AS REQUIRED ON THE PURCHASE ORDER:		
7	IS MATERIAL THE CORRECT GRADE AS REQUIRED ON THE PURCHASE ORDER		
8	IS THE MATERIAL LEGIBLY MARKED FROM THE SUPPLIER? THIS MAY BE STAMPED or STENCILED (record Grade, Type, Heat # And any other relevant information)		

5 Blue Process Equipment Inc. FEB 19 2014 Quality Department

NOTE: If any of these inspection steps cannot be completed the inspector shall notify the QS ASAP. The QS shall make out a NCR detailing the discrepancies and the material in question shall be quarantined until a satisfactory solution to the problem can be resolved. This may include rework or sending the material back to the supplier

Inspector TANVI BHATT MTR REVIEW (780) 955-2040E:226 Signature: _____ Date FEB 19 2014

SPARTAN Controls and its divisions:
Sterling Valve Automation
Farris Pressure Management
PIC Solutions
Flotech

Packing Slip

Calgary: (403) 207 - 0700
Edmonton: (780) 468 - 5463

ORDER 2126678 SO
DATE 04-Feb-2014
Requested 04-Feb-2014
Taken by Jillian Foster
From 8403 - 51 Ave Edmonton
Freight Collect
VIA (GRD) Dunrite Express

CUSTOMER PO NUMBER	CUSTOMER REQUISITION NUMBER
P8829-5B1108-82	

Ship To: 5Blue Process Equipment Inc.
2303 - 8 ST
Nisku AB T9E 7Z3

Site: NISKU
Special Instructions:

Sold To: 5Blue Process Equipment Inc.
2303 - 8 ST
Nisku AB T9E 7Z3

ITEM	NUMBER	Description	QTY	SHIP	B/O
		Ordered by/Phone #: Rob Martin / 780-955-2040			
1.0	0068R21C30A040T28E6	ROSEMOUNT RTD ASSEMBLY 1" NPT X 4" "U" Rosemount Temp Sensor Tag #: TE-01-1310D Serial #: 1588225	1	1	

A Return Authorization number is required for any item returned for credit. Failure to obtain and reference the number on your return will result in a delay of credit being issued or goods returned to sender.

RECEIVED FEB 10 2014

5 Blue Process Equipment Inc. FEB 13 2014

UNLESS OTHERWISE AGREED TO BY SPARTAN CONTROLS LTD. IN A SIGNED WRITTEN CONTRACT, THE SPARTAN STANDARD TERMS AND CONDITIONS WILL APPLY.
PLEASE SEE WWW.SPARTANCONTROLS.COM/TERMS

FLOWSERVE

QA Coversheet

Customer Name	**Process & Steam Specialties.**
Customer PO	**84-00272A**
Requistion	
Figure No.	**6-BX2-W111MA2N0NNTQ-CM4083**
Tag No.	**N/A**
SWO Number:	**1721359-2**

Cookeville Valve Operation: 1978 Foreman Dr. Cookeville Tennessee 38501
Tel: 931-432-3142, Fax: 931-432-5518

FLOWSERVE

Flowserve US Inc.

Cookeville Operation

Flow Control Division

Certificate of Conformance

2.1 Certification per EN10204

Process & Steam Specialties.	7031-56 AVE
Purchase Order 84-00272A	Edmonton
Drawing	AB
	T6B3L2

SWO Number	Figure Number	Item No	Quantity
1721359-2	6-BX2-W111MA2N0NNTQ-CM4083	1	1

Tag No N/A

Material Traceability

Body Heat No	*Serial No*	*Plug /DiscHeat No*	*Serial No*	*TopCap Heat No*	*Serial No*
W1450		X424			

This is to certify that the product(s) furnished on the referenced purchase order were manufactured, tested and inspected in accordance with Flowserve Engineering standards, policies, practices and our ISO 9001 Quality Assurance program and comply with purchase order requirements.

QUALITY CERTIFIED

On behalf of the Flowserve Corporatio

Mike Copeland

Wednesday, January 29, 2014

GWASF Quality Castings (P.) Ltd.

Plot no. 136, 7A Cross Road, Industrial Area Baikampady, Mangalore - 575011, India

INSPECTION CERTIFICATE

(In accordance with EN 10204 - 3.1)

Customer:

FLOWSERVE CORPORATION
Valve Division, 1978 Foreman Drive
Cookeville, TN 38501 4021

Certificate no. : FC3086
Heat no. : **W1450**
Date : 20.12.2012

CHEMICAL ANALYSIS

Element, %		C	Mn	Si	S	P	Cr	Ni	Mo
Specified	Min.						18.00	9.00	2.00
	Max.	0.08	1.50	1.50	0.04	0.040	21.00	12.00	3.00
Actual		0.063	0.77	0.49	0.003	0.025	18.55	9.31	2.33

HEAT TREATMENT

Type of Heat Treatment	Temperature, °C	Soaking Time, hrs.	Cooling Medium
Solution Annealing	1080	3	Water

MECHANICAL PROPERTIES

		Tensile Strength, MPa	Yield Strength, MPa	Elongation in 50mm, %
Specified	Min.	485	205	30
	Max.			
Actual		509.45	257.25	40.40

POURING DETAILS

Sl. No.	Part Name	Drawing No.	Purchase Order No.	Quantity Poured
1	6-150 DISC	DT84894AA	486178	16
2	8-150 DISC	DT84895AA	486178	10
3	2-150 BXL & W BODY	DT85497AA	486178	4
4	6-150 WI BODY	DT84928AB	486178	8

Condition of supply : FETTLED, HEAT-TREATED, PICKLED AND PASSIVATED
Castings produced by : INDUCTION MELTING
Visual Inspection : Acceptable as per MSS SP-55
Foundry identification : G
Remarks : Castings are free from harmful radiations

Material supplied is manufactured, sampled, tested and inspected in accordance with **ASTM A351-10 / A744-10 Grade CF8M** and is found to meet the requirements.
Material has been manufactured and supplied in accordance with purchase order requirements.

HARISH SHETTY
Quality Engineer

LAWRENCE LOBO
Manager - Quality

GWASF Quality Castings (P.) Ltd.
Plot no. 136, 7A Cross Road, Industrial Area Baikampady, Mangalore - 575011, India

INSPECTION CERTIFICATE
(In accordance with EN 10204 - 3.1)

Customer:

FLOWSERVE CORPORATION
Valve Division, 1978 Foreman Drive
Cookeville, TN 38501 4021

Certificate no. : FC3278
Heat no. : **X424**
Date : 20.05.2013

CHEMICAL ANALYSIS

Element, %		C	Mn	Si	S	P	Cr	Ni	Mo
Specified	Min.						18.00	9.00	2.00
	Max.	0.08	1.50	1.50	0.04	0.040	21.00	12.00	3.00
Actual		0.070	0.59	0.47	0.004	0.030	18.37	9.22	2.12

HEAT TREATMENT

Type of Heat Treatment	Temperature, °C	Soaking Time, hrs.	Cooling Medium
Solution Annealing	1080	3	Water

MECHANICAL PROPERTIES

		Tensile Strength, MPa	Yield Strength, MPa	Elongation in 50mm, %
Specified	Min.	485	205	30
	Max.			
Actual		544.00	261.12	56.10

POURING DETAILS

Sl. No.	Part Name	Drawing No.	Purchase Order No.	Quantity Poured
1	4-150 DISC	DT84893A -D4	519057	28
2	6-150 DISC	DT84894AA -D4	519057	40
3	10-150 DISC	DT84896AA -D4	519057	5
4	6-150 LI BODY	DT85089AB -D4	519057	3

Condition of supply : FETTLED, HEAT-TREATED, PICKLED AND PASSIVATED
Castings produced by : INDUCTION MELTING
Visual Inspection : Acceptable as per MSS SP-55
Foundry identification : G
Remarks : Castings are free from harmful radiations

The material was manufactured, sampled, tested and inspected in accordance with **ASTM A351-12b / A744-10 Grade CF8M** and was found to meet the purchase orderrequirements.

HARISH SHETTY
Quality Engineer

LAWRENCE LOBO
Manager - Quality

5Blue
Process Equipment Inc.

RECEIVING INSPECTION REPORT

DATE: NOV 0 4 2013 **PURCHASE ORDER#** 1108-82

CUSTOMER/OWNER Ball Valves

DESCRIPTION OF MATERIAL:	PLATE	TUBE /PIPE	BAR	FITTINGS	

		YES	NO
1	MATERIALS CORRECT TO PURCHASE ORDER:	✓	
2	MTR SUPPLIED WITH MATERIALS	✓	
3	MTR CHECKED AGAINST PACKING SLIP	✓	
4	MTR CORRECT FOR THIS MATERIAL	✓	
5	IS MATERIALS IN GOOD CONDITION (NO DAMAGE):	✓	
6	IS MATERIAL THE SAME SIZE AND SCHEDULE AS REQUIRED ON THE PURCHASE ORDER:	✓	
7	IS MATERIAL THE CORRECT GRADE AS REQUIRED ON THE PURCHASE ORDER	✓	
8	IS THE MATERIAL LEGIBLY MARKED FROM THE SUPPLIER? THIS MAY BE STAMPED or STENCILED (record Grade, Type, Heat # And any other relevant information)	✓	

5 Blue Process Equipment Inc. NOV 0 4 2013 Quality Department

NOTE: If any of these inspection steps cannot be completed the inspector shall notify the QS ASAP. The QS shall make out a NCR detailing the discrepancies and the material in question shall be quarantined until a satisfactory solution to the problem can be resolved. This may include rework or sending the material back to the supplier

NOV 0 4 2013

Inspector : _____ **Signature:** _____ **Date** _____

ROSEMARY KUNTZ
SAFETY / MTR
(780) 955-2040E:226

MRC
Global Supplier of Choice®

PACKING LIST

2954046001

Sales Order
Number 2954046001 **Page** 1
Printed 10/29/13 11:56

Deliver To:	**From:** 73-750	**Customer Purchase Order**
5 BLUE PROCESS EQUIPMENT INC 2303 - 8TH ST NISKU AB T9E 7Z3	NISKU DISTRIBUTION CENTRE 502 - 25 AVE NISKU AB T9E 0K6	P8104-5B1108-82 **Customer Release/Requisition No.** **Ordered by:** ROB MARTIN

Promised - 10/29/13 **Salesman** - TONY MATERI **Ship VIA** - OUR TRUCK **Terms** - NET 30 DAYS
Shipped - 10/29/13 **Phone** - (780) 469-2779 **Freight Terms** - PREPAID & ALLOW A **Customer Ship No.** - 27679-0000

C/W MTRS
SHIP PM OCT 29

CPO Line	Customer Part/Item ID	Quantity Ordered	Backorder	Shipped	U/M	Description	Line No.
	14C10270	1		1	EA	2 BALON 2R-F33-RF 300# CS RP 2PC BB B VLV RF B:WCB T: STD LH FS	001
	14C20169	1		1	EA	1-1/2 BALON P-4128-CS CS BALL VLV HANDLE F/2 RP	002

5 Blue Process Equipment Inc. Quality Department NOV 04 2013

RECEIVED OCT 29 2013

THIS IS NOT AN INVOICE. DO NOT PAY FROM THIS DOCUMENT. RECEIVED BY - _____

Tubes- Box/Bag- 2 Crates- Pallets- Pieces- Bundles- Picked by- ARK Checked by- JEM Staged-
Order Weight- 29.80 Material Tot- Freight- $ .00 Other- $ .00 Tax- $ .00 Total- $ .00

CMPACK (Rev 05/09)

BALON CORPORATION
(Ball Valves, Check Valves, Needle Valves)

3245 S. Hattie Avenue
Oklahoma City, OK 73129
Telephone: (405) 677-3321
Facsimile: (405) 677-3917

CERTIFICATE OF ASME / ANSI HYDROTEST

Balon certifies that the referenced valves were hydrostatically tested by Balon Corporation according to the test method required in ASME / ANSI Standard B16.34. The testing schedule is detailed below.

Testing Schedule:

	Shell Testing:	Seat Testing:
Pressure Class.	Gage Pressure, psig.	Gage Pressure, psig
150	450	325
300	1125	825
600	2250	1650
900	3350	2450
1500	5575	4100

Valve Size	Minimum Test Time, sec	Minimum Test Time, sec
≤ 2"	15	15
2 ½" – 8"	60	30
≥10"	180	60

Lynn B. Cluck
Lynn B. Cluck
Quality Manager
Balon Corporation

Blue Process Equipment Inc.
NOV 04 2013
Quality Department

BALON CORPORATION
(Ball Valves, Check Valves, Needle Valves)

3245 S. Hattie Avenue
Oklahoma City, OK 73129
Telephone: (405) 677-3321
Facsimile: (405) 677-3917

CERTIFICATE OF COMPLIANCE TO INDUSTRY STANDARDS

The following is a partial list of design and manufacturing standards with which Balon Corporation has complied in the design and manufacturing of the referenced valves. Individual standards may apply to one or more valve styles, configurations and materials. Not every valve meets every standard.

API 6FA -	Specification for Fire Test for Valves
API Q1 -	Specification for Quality Programs for the Petroleum, Petrochemical and Natural Gas Industry
API 594 -	Check Valves: Wafer, Wafer-Lug and Double Flanged Type
API 6D -	Pipeline Valves
ASME / ANSI B1.2 -	Gages & Gaging for Unified Inch Screw Threads
ASME / ANSI B1.20.1 -	Pipe Threads, General Purpose (Inch)
ASME / ANSI B16.10 -	Face-to-Face and End-to-End Dimensions of Valves
ASME / ANSI B16.25 -	Buttwelding Ends
ASME / ANSI B16.34 -	Valves – Flanged, Threaded and Welding End
ASME / ANSI B16.5 -	Pipe Flanges and Flanged Fittings NPS ½ through NPS 24 Metric/Inch Standard
ASME / ANSI B31.3 -	Process Piping
ASME / ANSI B31.8 -	Gas Transmission and Distribution Piping Systems
MSS SP-25 -	Standard marking System for Valves, Fittings, Flanges and Unions
NACE MR 0175 -	Petroleum and Natural Gas Industries – Materials for Use in H_2S-containing Environments in Oil and Gas Production

Lynn B. Cluck
Quality Manager
Balon Corporation

BALON CORPORATION
(Ball Valves, Check Valves, Needle Valves)

3245 S. Hattie Avenue
Oklahoma City, OK 73129
Telephone: (405) 677-3321
Facsimile: (405) 677-3917

CERTIFICATE OF API Q1 COMPLIANCE

This certificate verifies that all Balon valves, including the referenced valves, have been designed and manufactured to meet the requirements of the API Q1 Quality System.

Lynn B. Cluck
Quality Manager
Balon Corporation

BALON CORPORATION
(Ball Valves, Check Valves, Needle Valves)

3245 S. Hattie Avenue
Oklahoma City, OK 73129
Telephone: (405) 677-3321
Facsimile: (405) 677-3917

CERTIFICATE OF NACE COMPLIANCE

Balon certifies that the following valves meet the requirements of NACE Standard MR-01-75, current edition.

Series "LS" Stainless Ball Valves

Series "F" Aluminum Bronze Ball Valves

Series "S" Stainless Steel Ball Valves

Series "C" Carbon Steel, Ductile Iron and Aluminum Bronze Check Valves

Series "D" Carbon Steel or Ductile Iron Check Valves

API Pattern "Long" and "Thin" Carbon Steel Check Valves

Series "LM" Carbon Steel Ball Valves –	Meet NACE if the letter "N" is in the valve description – example: LM-05361-N
Series "F" Carbon Steel Ball Valves –	Meet NACE if the letter "N" is in the valve description – example: 4F-F63N-RF
Series "F" Ductile Iron Ball Valves –	Meet NACE if the letter "N" is in the valve description – example: 2R-F92N-SE
Series "S" Carbon Steel Ball Valves –	Meet NACE if the letter "N" is in the valve description – example: 2R-S93N-SE
Series "S" Ductile Iron Ball Valves –	Meet NACE if the letter "N" is in the valve description – example: 2R-S92N-SE
Series "T" Carbon Steel Trunnion Mounted Ball Valves –	Meet NACE if the letter "N" is in the valve description – examples: 8F-T63CN-RF or 8F-T63SN-RF
Needle Valves -	Meet NACE if the letter "N" is in the valve description – examples: N405-MF-N or N465-MF-N

Lynn B. Cluck
Lynn B. Cluck
Quality Manager
Balon Corporation

5Blue
Process Equipment Inc.

RECEIVING INSPECTION REPORT

DATE: OCT 2 2 2013 **PURCHASE ORDER#** 1108-82

CUSTOMER/OWNER Ball Valve

DESCRIPTION OF MATERIAL:	PLATE	TUBE /PIPE	BAR	FITTINGS	

		YES	NO
1	MATERIALS CORRECT TO PURCHASE ORDER:	✓	
2	MTR SUPPLIED WITH MATERIALS	✓	
3	MTR CHECKED AGAINST PACKING SLIP	✓	
4	MTR CORRECT FOR THIS MATERIAL	✓	
5	IS MATERIALS IN GOOD CONDITION (NO DAMAGE):	✓	
6	IS MATERIAL THE SAME SIZE AND SCHEDULE AS REQUIRED ON THE PURCHASE ORDER:	✓	
7	IS MATERIAL THE CORRECT GRADE AS REQUIRED ON THE PURCHASE ORDER	✓	
8	IS THE MATERIAL LEGIBLY MARKED FROM THE SUPPLIER? THIS MAY BE STAMPED or STENCILED (record Grade. Type, Heat # And any other relevant information)		✓

5 Blue Process Equipment Inc. OCT 2 2 2013 Quality Department

NOTE: If any of these inspection steps cannot be completed the inspector shall notify the QS ASAP. The QS shall make out a NCR detailing the discrepancies and the material in question shall be quarantined until a satisfactory solution to the problem can be resolved. This may include rework or sending the material back to the supplier

Inspector : _____ **Signature:** RKuntz **Date** OCT 2 2 2013

ROSEMARY KUNTZ
SAFETY / MTR
(780) 955-2040E:226

MRC
Global Supplier of Choice®

PACKING LIST

2914047001

Sales O r
Number 2914047001 Page 1
Printed 10/15/13 10:36

Deliver To:	From: 73-750	Customer Purchase Order
5 BLUE PROCESS EQUIPMENT 2303-8ST NISKU AB T9E 7Z3	EDMONTON, AB 5607 - 67 AVENUE NW EDMONTON AB T6B 2R8	P7948-5B1108-82 Customer Release/Requisition No. Ordered by: ROB MARTIN

Promised - 10/21/13 Salesman - KATHY GEISLINGER Ship VIA - OUR TRUCK Terms - NET 30 DAYS
Shipped - 10/15/13 Phone - (780) 469-2779 Freight Terms - PREPAID & ALLOW A Customer Ship No. - 27679-0000

CAN SHIP TODAY WHEN READY

CPO Line	Customer Part/Item ID	Quantity Ordered	Backorder	Shipped	U/M	Description	Li N
	14MMMMMM	1		1	EA	2"150 RF GROVE TRUNNION DB&B FP VALVE C/W PORTED RELIEF 9K-4C02F01F02AX004	0(

MFG GROVE HEAT # 2685969-02

RECEIVED OCT 21 2013

5 Blue Process Equipment Inc. OCT 21 2013 Quality Department

THIS IS NOT AN INVOICE. DO NOT PAY FROM THIS DOCUMENT. RECEIVED BY -

Tubes- Box/Bag- Crates- Pallets- 1 Pieces- Bundles- Picked by- REC Checked by- DRP Staged-
Order Weight- 51.00 Material Tot- Freight- $ .00 Other- $ .00 Tax- $ .00 Total- $ .00

CMPACK (Rev 05/09)

CAMERON

HYDROSTATIC REPORT

CAMSERV Cameron Aftermarket Services

W/O NUMBER 4048324 SERIAL NUMBER 2685969-02

VALVE DESCRIPTION / FIGURE # 2" 150 BAC 4C02F01F02A

HYDRO TEST SPECIFICATION	REVISION
SA-M1-22	Rev 04

TEST DESCRIPTION	TEST PRESSURE	TEST DURATION	ACCEPT	REJECT	DATE TESTED
BODY/SHELL TEST	428	2min	✓		Oct. 11/13
Side A	314	2min	✓		Oct. 11/13
Side B	314	2min	✓		Oct. 11/13

PRESSURE GAUGE SER. #	CALIBRATION DUE DATE
G-057	1/28/14
G-037	1/28/14
G-038	1/28/14

NOTES:

COMMENTS:
All Hydrotests meet requirements

DATE Oct. 11 2013 TEST PERFORMED BY [signature] TEST WITNESSED BY

PLEASE USE BALL POINT PEN AND WRITE LEGIBLY

Bibus Process Equipment Inc. OCT 22 2013 Quality Department

CAMERON

VALVES & MEASUREMENT

Thursday, 07-Feb-2013

From:

Cameron Canada Corporation
3707 97 St.
Edmonton, Alberta, Canada
T6E6J2
Phone : 780-468-2732
Web Site : www.c-a-m.com

To:

Subject:

Serial	2685969	Quantity/Series	-01 to -10

Comments:

Part #: 9K-4C02F01FO2A

Description: 02 150 B4B FXF NACE W/WRENCH

Sales Order: n/a

Customer P/O: n/a

5 Blue Process Equipment Inc.
OCT 22 2013
Quality Department

MTRs produced using MetalTrace®. Visit www.TraceApps.com or call toll-free 1-866-429-7007 for more information.

CAMERON

VALVES & MEASUREMENT

Thursday, 07-Feb-2013

From:

Cameron Canada Corporation
3707 97 St.
Edmonton, Alberta, Canada
T6E6J2
Phone : 780-468-2732
Web Site : www.c-a-m.com

To:

Document Summary Page

The documents are printed in the following order:

#	Heat #	Heat Code	Job/Serial #	Material #	Description
1	GROVE		2685969	9K-4C02F01FO2A	Grove B4, B5 Sour Low Temp.
2	XY-0083		2685969	9K-4C02F01FO2A	BODY-FIRESAFE w/1/2"NPT PORT, 02 150/300 B4B,
3	A123918		2685969	9K-4C02F01FO2A	TRUNNION-UNPLATED 02 0600 B4C
4	A123918		2685969	9K-4C02F01FO2A	PLATE-GLAND (FIRESAFE) 02 0150/900 B4C
5	022261		2685969	9K-4C02F01FO2A	STEM, GROVE B4, 02 150/1500, 4140 NON PLATE
6	12E475		2685969	9K-4C02F01FO2A	CLOSURE-RF-FORG LF2 02 150 B4B
7	12E432		2685969	9K-4C02F01FO2A	CLOSURE-RF-FORG LF2 02 150 B4B

MTRs produced using MetalTrace®. Visit www.TraceApps.com or call toll-free 1-866-429-7007 for more information.

VALVES & MEASUREMENT
Cameron Canada Corporation
3707 – 97 Street
Edmonton Alberta Canada T6E 6J2
Phone 780.463.6868
Fax 780.465.1244
www.c-a-m.com

LETTER OF COMPLIANCE

for:

GROVE BRAND TRUNNION VALVES

Model B4, B5 - Sour Low Temperature Service

Cameron Valves & Measurement hereby certifies that the design, manufacture, sampling, testing and quality control inspection of the GROVE brand CSA Z245.15 ball valves for Sour Low Temperature Service meet the requirements of CSA Z245.15-09 Sour Service, V&M Engineering Standards, and customer purchase order requirements. As part of compliance to these specifications, the valves are marked in accordance with MSS SP-25. The valves are also marked "SOUR" as required by CSA Z245.15 marking requirements for Sour Service and are suitable for use in CSA Z662 Pipeline systems.

The materials of construction for these valves conform to the metallurgical requirements of NACE MR0175/ISO 15156:2003 (Parts 1 & 2 for Carbon & Alloy Steels in SSC Region 3 Sour Service and Parts 1 & 3 for CRA's as specified in CSA Z245.15 Chapter 13). According to NACE MR0175-2003/ISO 15156, it is the customer's / user's responsibility to ensure that the valve materials will be satisfactory in the intended service.

The minimum service temperature of these valves is -46°C/-50°F. Impact testing has been performed in accordance with applicable ASTM requirements and those of CSA Z245.15 for Category II M45C Service.

The ASTM A320 Grade L7M studs and capscrews and ASTM Grade A194 7ML nuts used in the products specified above have been Quality Control inspected and meet the requirements of the applicable ASTM specifications – as is already implied fully by the statements above regarding both CSA and NACE standards compliance.

Approved by: _____

Greg Ogaranko, M.Eng. P. Eng.
Engineering Manager

03/25/11
EWR10619-01 Rev03.docx

ACM Machining Inc. hereby certify that all test results and process information contained in this report are correct and true as contained in the records of the company and meet purchase order and or specification requirements.

WE CERTIFY THAT HEAT TEST NO.	XY-0083	DATE	8-30-12
WAS USED TO MAKE PART NO.	9K-290V02110-9	PO NO	4503406435
ACM QUALITY DEPT		QUANTITY	52

JIANGYIN XINYU FORGING CO.,LTD

MATERIAL CERTIFICATION

Conforms to DIN 50049.3.1 & BS EN 10204.3.1 Ref. PO#: 78472

CUSTOMER NAME	ACM Machining, inc	Reduction ratio	>3	Melting practice	EF+LF+VD	CERT. NO.	ACM-214
SPECIFICATION	ASTM A350 LF2 00700 Rev .2	Manufacturing Process	Heat treatment-> Rough machining			CERT. DATE	June 30,2012

Item No.	Forging Logo.	Heat No.	QTY	Part No.	Desc.	Chemical Composition (%)												Mechanical Properties								Heat treatment		
																		Yield	Tensile	El.2"	Roa	HB	Impact			Batch No.	C120616	
						C	Mn	Si	S	P	Cr	Mo	Ni	Cu	V	Nb	CE	(MPa)	(MPa)	(%)	(%)		(J @-46°C)				Temperature	Time
					Min.		0.60	0.15										300	485	22	30		20(A)/17(S)			Quenching	920℃	3.5h
					Max.	0.23	1.35	0.30	0.035	0.035	0.30	0.12	0.40	0.40	0.05	0.02	0.43		655			197				Tempering	630℃	4h
1	XY	XY-0083	1050	BDY-02-900-00700	2"900 body	0.22	0.92	0.24	0.004	0.018	0.03	0.020	0.01	0.01	0.006	0.005	0.39	335	506	37	72	165	208	158	172	Water Quench	17℃	Start
																											19℃	End

We hereby certify that the items described herein have been inspected as above in accordance with ASTM-A350 Section 8.

QUALITY INSPECTOR: Zhao Qin QUALITY MANAGER: Xiao Hongli

Cameron Approved
By: laia Date:09/13/12 8:53

Steel Dynamics, Inc.
Engineered Bar Products Division

8000 N. County Road 225 East
Pittsboro, IN 46167
Phone: (317) 892-7000
Fax: (317) 892-7285

Certified Material Test Report

Cert # : 139308	Mill Order : 1209712	Heat # : A123918	Issued : 9/17/2012 15:07:19
Work Order : 135024	Sales Order : 108094-1	Customer : Solid Steel Co. INC	PO # : 081012-1-4
Load # : 167001	Reference # :	Reference Desc. :	End Use :
Size : 3"	Shape : Round	Grade : A105/LF2 Chem	Length : 20'00"
Grain Practice : Al Fine Grain (5-8) per ASTM A29		Reduction Ratio : 20.2 to 1	Disposition : 1

Ladle Chemistry Analysis (ASTM A29)

C	Mn	P	S	Si	Al	Cu	Ni	Cr	Mo	Sn	N	V	Cb	B	Ca	W	Ti	Di
0.17	1.06	0.011	0.003	0.20	0.025	0.24	0.10	0.17	0.03	0.011	0.0083	0.038	0.001	0.0002	0.0012	0.003	0.001	0.84

Pb	Co	As	Sb	Zr	Bi	H	O	Ceq	J-Factor
0.000	0.007	0.006	0.003	0.000	0.000	2.0		0.41	

Product Check Analysis (ASTM A29)

	C	Mn	P	S	Si	Al	Cu	Ni	Cr	Mo	Sn	N	V	Cb	Ti	B	Ca	O
Front																		
Back																		

Jominy (ASTM A255)

	J1	J2	J3	J4	J5	J6	J7	J8	J9	J10	J12	J14	J16	J18	J20	J24	J28	J32
Calc'd																		
Front																		
Back																		

Microcleanliness (ASTM E45)

Method A								Method C		Method E	
AT	AH	BT	BH	CT	CH	DT	DH	S	O	SAM "B"	SAM "D"

Microcleanliness (DIN 50602)

K		M
S	O	Tot	Tot

Decarb

Depth	% of Diameter

Grainsize

Austenitic	Ferritic

Macrostructure (ASTM E381)

S	R	C

Magnetic Particle Inspection

Frequency	Severity

Mechanical Properties (ASTM A370)

Tensile Properties				Hardness	
Tensile Strength	0.2% Yield Strength	% Elong (2")	% ROA	(MR)	(Surf)

Steel Dynamics - Engineered Bar Products has a quality system in place which has been certified ISO 9001:2008 compliant including PED certification

Comments/Specs

ASTM A105 -11 ----- ASTM A350-11 LF2 ----- Normalize and Machine Straighten ----- NACE MR-01-75 / ISO 15156: 2009 ----- DIN EN 10204:2004 issue 3.1

Cameron Approved
By: laia Date:01/15/13 8:41

Condition : Normalize

I hereby certify that the content of this report is correct and accurate, and that all tests and operations performed on this material were in compliance with applicable material specifications and purchaser designated requirements.

Dylan Kalo

Dylan Kalo - Rolling Mill Metallurgist

Any alteration to this report voids Steel Dynamic's warranting of results. No weld repair has been performed on this material. This material is not radioactive and has not been exposed to radioactivity while under the control of Steel Dynamics. This material has not been exposed to mercury while under the control of Steel Dynamics. Unless otherwise noted, this material was melted, continually cast, and rolled in the USA; w/ all testing performed by Steel Dynamics

retrieve_20

Steel Dynamics Rev Level 1 [108] - 241

Part No. 20231
Lot No. 7149

I hereby certify that the content of this report is correct and accurate, and that all tests and operations performed on this material were in compliance with applicable material specifications and purchaser designated requirements.

Garrett Bouyett - Bar Finishing Metallurgist

Any alteration to this report voids Steel Dynamic's warranting of results.

retrieve_20

Steel Dynamics Rev Level 1 [108] 350

Part No. 20231

ACM Machining Inc. hereby certify that all test results and process information contained in this report are correct and true as contained in the records of the company and meet purchase order and or specification requirements.

WE CERTIFY THAT HEAT TEST NO.	A123918	DATE	1-10-13
WAS USED TO MAKE PART NO.	9K-293-02017-V2NP	PO NO	4503584132
ACM QUALITY DEPT	Marie Bathrick	QUANTITY	27

CERTIFICATE OF ANALYSIS AND TESTS

For: ACM MACHINING | Country of origin – USA | Date: 8-31-12

11390 GOLD DREDGE WAY | Your Order# 78869

RANCHO CORDOVA CA 95742 | OUR SOLID STEEL# 26-167001

DESCRIPTION OF MATERIAL AND SPECIFICATIONS | COMMENTS

3" HR RND X 20' GRADE A350/LF2

CHARPY IMPACT: ASTM E23 V NOTCH 10MM X 10MM

SAMPLE ID	ORIENTATION	LOCATION	TEMP (F)	IMPACT ENERGY (FT-LBS)				LATERAL EXPANSION (0.001")				% SHEAR			
				1	2	3	AVG	1	1	3	AVE	1	2	3	AVE
41300	LONGITUDINAL	MID-RADIUS Q1	-50	74	97	83	85	55	75	65	65	40	50	50	47

NORMALIZE

TIME	TEMP
3.5 HRS	1670F

CHEMICAL ANALYSIS

HT#	C	MN	P	S	SI	NI	CR	MO	V	CU	AL	SN	B
A123918	.17	1.06	.011	.003	.20	.10	.17	.03	.038	.24	.025	.011	.0002
	N	CB	CA	W	TI	DI	CO	AS	SB	ZR	BI	H	PB
	.0083	.001	.0012	.000	.001	.84	.007	.006	.003	.000	.000	2.0	.000

MECHANICAL PROPERTIES

TENSILE	0.2% YIELD	% E (2")	ROA %	HARDNESS	SAMPLE ID	GRAIN SIZE
				MID RADIUS Q1	41300	FINE
75,000 psi	49,800 psi	33	66	HB 155		

COMMENTS: ASTM A 576-90B (LATEST REV.) - ELECTRIC ARC FURNACE MELTED - VACUUM TANK DEGASSED – NACE MR-01-75/ISO 15156 NORMALIZE – DIN EN 10204:2004 ISUE 3.1

FURNACES ARE CALIBRATED TO API 6A ANNEX P, AND USE ATMOSPHERIC THERMOCOUPLES.

QTC IS 12" PROLONGATION FROM LONGITUDIANL ORIENTATION MACHINED TO A 0.505" BOTTONHEAD FOR TENSILE.

MILL HAS QUALITY SYSTEM IN PLACE HAS BEEN ISO 9001:2008 COMPLIANT, INCLUDING PED CERTIFICATION.

THIS MATERIAL IS IN ACCORDANCE WITH AND CONFORMS TO: A350/LF2

SOLID STEEL INC
15815 WEST AVE
HARVEY IL 60426
708-225-0900 Phone.
708-225-0909 Fax.

WE HEREBY CERTIFY THAT THE FOREGOING DATA IS A TRUE COPY OF THE DATA FURNISHED US BY OUR SUPPLIER OR RESULTING FROM TESTS PERFORMED IN A RECOGNIZED LABORATORY

Signed: Weston Griffith Jr

ACM Machining Inc. hereby certify that all test results and process information contained in this report are correct and true as contained in the records of the company and meet purchase order and or specification requirements.

ACM QUALITY DEPT	WAS USED TO MAKE PART NO.	WE CERTIFY THAT HEAT TEST NO.
Mark Ballard	9K-293-02017-V2NP	A123918
QUANTITY	PO NO	DATE
27	4503584132	1-10-13

Cameron Approved
By: laia Date:01/15/13 8:42

Part No. 20231
Lot No. 7149

Steel Dynamics, Inc.
Engineered Bar Products Division

8000 N. County Road 225 East
Pittsboro, IN 46167
Phone: (317) 892-7000
Fax: (317) 892-7285

Certified Material Test Report

Cert # : 139308	Mill Order : 1209712	Heat # : A123918	Issued : 9/17/2012 16:07:19
Work Order : 135024	Sales Order : 108094-1	Customer : Solid Steel Co, INC	PO # : 081012-1-4
Load # : 167001	Reference # :	Reference Desc :	End Use :
Size : 3"	Shape : Round	Grade : A105/LF2 Chem	Length : 20'00"
Grain Practice : Al Fine Grain (5-8) per ASTM A29		Reduction Ratio : 20.2 to 1	Disposition : 1

Ladle Chemistry Analysis (ASTM A29)

C	Mn	P	S	Si	Al	Cu	Ni	Cr	Mo	Sn	N	V	Cb	B	Ca	W	Ti	DI
0.17	1.06	0.011	0.003	0.20	0.025	0.24	0.10	0.17	0.03	0.011	0.0083	0.038	0.001	0.0002	0.0012	0.003	0.001	0.84

Pb	Co	As	Sb	Zr	Bi	H	Q	Ceq	J-Factor
0.000	0.007	0.006	0.003	0.000	0.000	2.0		0.41	

Product Check Analysis (ASTM A29)

	C	Mn	P	S	Si	Al	Cu	Ni	Cr	Mo	Sn	N	V	Cb	Ti	B	Ca	O
Front																		
Back																		

Jominy (ASTM A255)

	J1	J2	J3	J4	J5	J6	J7	J8	J9	J10	J12	J14	J16	J18	J20	J24	J28	J32
Calc'd																		
Front																		
Back																		

Microcleanliness (ASTM E45)

Method A								Method C		Method E	
AT	AH	BT	BH	CT	CH	DT	DH	S	O	SAM "B"	SAM "D"

Microcleanliness (DIN 50602)

K		M	
S	O	Tot	Tot

Decarb

Depth	% of Diameter

Grainsize

Austenitic	Ferritic

Macrostructure (ASTM E381)

S	R	C

Magnetic Particle Inspection

Frequency	Severity

Mechanical Properties (ASTM A370)

Tensile Properties				Hardness	
Tensile Strength	0.2% Yield Strength	% Elong (2")	% ROA	(MR)	(Surf)

Steel Dynamics - Engineered Bar Products has a quality system in place which has been certified ISO 9001:2008 compliant, including PED certification

Comments/Specs

ASTM A105 -11 ----- ASTM A350-11 LF2 ----- Normalize and Machine Straighten ----- NACE MR-01-75 / ISO 15156 -2009 ----- DIN EN 10204:2004 issue 3.1

Condition : Normalize

I hereby certify that the content of this report is correct and accurate, and that all tests and operations performed on this material were in compliance with applicable material specifications and purchaser designated requirements.

Dylan Kale - Rolling Mill Metallurgist

Any alteration to this report voids Steel Dynamic's warranting of results. No weld repair has been performed on this material. This material is not radioactive and has not been exposed to radioactivity while under the control of Steel Dynamics. This material has not been exposed to mercury while under the control of Steel Dynamics. Unless otherwise noted, this material was melted, continually cast, and rolled in the USA; w/ all testing performed by Steel Dynamics.

Steel Dynamics Rev Level 1 [108] 241

Part No. 20231
Lot No. 7169

I hereby certify that the content of this report is correct and accurate, and that all tests and operations performed on this material were in compliance with applicable material specifications and purchaser designated requirements.

Garrett Bouyett - Bar Finishing Metallurgist

Any alteration to this report voids Steel Dynamic's warranting of results.

Steel Dynamics Rev Level 1 [108] - 350

Part No. 20231

Cameron Approved
By: laia Date:01/30/13 11:14

ACM Machining Inc. hereby certify that all test results and process information contained in this report are correct and true as contained in the records of the company and meet purchase order and or specification requirements.

WE CERTIFY THAT HEAT TEST NO.	A123918	DATE	1-25-13
WAS USED TO MAKE PART NO.	9K-293-02063-V1	PO NO	4503674757
ACM QUALITY DEPT	Charlie Ballard	QUANTITY	175

CERTIFICATE OF ANALYSIS AND TESTS

For: ACM MACHINING — Country of origin – USA — Date: 8-31-12

11390 GOLD DREDGE WAY — Your Order# 78869

RANCHO CORDOVA CA 95742 — OUR SOLID STEEL# 26-167001

DESCRIPTION OF MATERIAL AND SPECIFICATIONS — **COMMENTS**

3" HR RND X 20' GRADE A350/LF2

CHARPY IMPACT	ASTM E23 V NOTCH 10MM X 10MM			IMPACT ENERGY (FT-LBS)				LATERAL EXPANSION (0.001")				% SHEAR			
SAMPLE ID	ORIENTATION	LOCATION	TEMP (F)	1	2	3	AVG	1	1	3	AVE	1	2	3	AVE
41300	LONGITUDINAL	MID-RADIUS Q1	-50	74	97	83	85	55	75	65	65	40	50	50	47

NORMALIZE	
TIME	TEMP
3.5 HRS	1670F

CHEMICAL ANALYSIS

HT#	C	MN	P	S	SI	NI	CR	MO	V	CU	AL	SN	B
A123918	.17	1.06	.011	.003	.20	.10	.17	.03	.038	.24	.025	.011	.0002
	N	CB	CA	W	TI	DI	CO	AS	SB	ZR	BI	H	PB
	.0083	.001	.0012	.000	.001	.84	.007	.006	.003	.000	.000	2.0	.000

MECHANICAL PROPERTIES

TENSILE	0.2% YIELD	% E (2")	ROA %	HARDNESS	SAMPLE ID	GRAIN SIZE
				MID RADIUS Q1	41300	FINE
75,000 psi	49,800 psi	33	66	HB 155		

COMMENTS: ASTM A 576-90B (LATEST REV.) - ELECTRIC ARC FURNACE MELTED - VACUUM TANK DEGASSED – NACE MR-01-75/ISO 15156 NORMALIZE – DIN EN 10204:2004 ISUE 3.1

FURNACES ARE CALIBRATED TO API 6A ANNEX P, AND USE ATMOSPHERIC THERMOCOUPLES.

QTC IS 12" PROLONGATION FROM LONGITUDIANL ORIENTATION MACHINED TO A 0.505" BOTTONHEAD FOR TENSILE.

MILL HAS QUALITY SYSTEM IN PLACE HAS BEEN ISO 9001:2008 COMPLIANT, INCLUDING PED CERTIFICATION.

THIS MATERIAL IS IN ACCORDANCE WITH AND CONFORMS TO: A350/LF2

SOLID STEEL INC
15815 WEST AVE
HARVEY IL 60426
708-225-0900 Phone.
708-225-0909 Fax.

Signed: Weston Griffith Jr

WE HEREBY CERTIFY THAT THE FOREGOING DATA IS A TRUE COPY OF THE DATA FURNISHED US BY OUR SUPPLIER OR RESULTING FROM TESTS PERFORMED IN A RECOGNIZED LABORATORY

Cameron Approved
By: laia Date:01/30/13 11:15

Part No. 20231
Lot No. 764

ACM Machining Inc. hereby certify that all test results and process information contained in this report are correct and true as contained in the records of the company and meet purchase order and or specification requirements.

ACM QUALITY DEPT	WE CERTIFY THAT HEAT TEST NO.	A123918	DATE	1-25-13
Mark Ballard	WAS USED TO MAKE PART NO.	9K-293-02063-V1	PO NO	4503674757
			QUANTITY	175

Hamilton Specialty Bar (2007) Inc.
319 SHERMAN AVENUE NORTH
P.O.BOX 2943, HAMILTON, ONTARIO, L8N 3R5
Phone: (905)312-8650 Fax: (905)312-1819

ISO 9001
ISO/TS 16949
ISO 14001

TEST REPORT/RAPPORT D'EXAMEN

Customer code : 208000
Cust. Order No.: 30122
Cust. Part No.:

Date : 2010-07-14

Vendor/Vendeur:	Sold to/Vendu à:	Ship to/Livrée à:
HAMILTON SPECIALTY BAR (2007) INC. 319 SHERMAN AVENUE NORTH P.O. BOX 2943 HAMILTON ON L8N 3R5	TURRET STEEL INDUSTRIES, INC. 105 PINE STREET IMPERIAL PA 15126-1142 USA	TURRET STEEL INDUSTRIES, INC. c/o SUPER STEEL TREATING CO. 6227 RINKE WARREN MI 48091 USA

IPO: 10637
Heat: 022261 RD - Rounds

Dimensions : 1.2500 in

Cust Grade 4140

Length: 216.000 in

Chemical Analysis

C	Mn	P	S	Si	Cu	Cr	Mo	Ni	Al
0.41	1.00	0.013	0.021	0.29	0.27	0.86	0.156	0.18	0.021

Jominy end-quench

J01	J02	J03	J04	J05	J06	J07	J08	J09	J10	J11	J12	J13	J14	J15	J16	J18	J20	J22	J24	J26	J28	J30	J32
57	57	57	57	57	57	57	56	55	53	52	51	50	49	48	47	47	46	45	44	43	42	41	40

Comments

Reduction Ratio: 31

Reduction Ratio:-

ASTM E381 RATING: S-1 R-1 C-1

ASTM E45 PLATE I (A) AT AH BT BH CT CH DT DH..

2.0 1.0

THIS MATERIAL CONFORMS TO FED MOGUL SPECS. M-301 AND M-302..

This material was not exposed to mercury or any alloy which is liquid at ambient temperature during processing or while in Hamilton Specialty Bar (2007) Inc. possession. This material was not subject to weld repair nor exposed to radioactivity while in Hamilton Specialty Bar (2007) Inc. possession. This material was produced in an electric arc furnace. Continuous strand cast. This was melted and rolled in Canada. Certified correct as contained in the company's records. / Toutes les informations ci-inclusses sont attestée exact tel quelle ce trouvant dans nos dossier.

R7-035

Peter Kourtakis, QA Technician

Cameron Approved
By: laia Date:01/17/13 4:21

Part No. 60016
Lot No. 5581

ACM Machining Inc. hereby certify that all test results and process information contained in this report are correct and true as contained in the records of the company and meet purchase order and or specification requirements.

WE CERTIFY THAT HEAT TEST NO.	022261	DATE	12-21-12
WAS USED TO MAKE PART NO.	9K-295-02018-2NP	PO NO	4503584132
ACM QUALITY DEPT	[signature]	QUANTITY	300

Suzhou Dongwu Forging&Welding Co.,Ltd

MILL TEST CERTIFICATE REPORT

Purchaser: CAMERON Cert. No. 1208032-3 Date: 29/Aug/2012

PO No.:	4503481307		Certificatie type	EN 10204, 3.1, 2004	Tensile	Dimension	Section	Length	Testing Temperature (℃)	Brinell Hardness	Load (Kg)	Location	Impact Test	Testing Temp.	Type	Dim. (mm)	Orientation
Material Specification	ASTM A350 LF2&MS-021009-01-01 REV13		Melting Practice	E.F.	Test bar	(mm)	(mm^2)	(mm)						-46℃ max	V-Notch	10 x 10 x 55	Longitudinal
			Test performed on	QTC ·· Piece □	Actual	12.5	122	50	room temperature	Actual	3000	Surface	Actual	-46	V-Notch	10 x 10 x 55	Longitudinal

Heat Treatment	Temperature( )	Time (h)	Cooling Method
QUENCHED	900ºC	5.5	In water
TEMPERED	600ºC	8.5	In Air

Item No	Description	Part No.	Qty	Heat No.	Heat Treatment Lot No.		Chemical Composition %												Mechanical Properties					Impact Test			
							C	Mn	Si	S	P	Cr*	Mo*	Ni*	Cu*	V*	Nb*	CE	YS (Mpa)	UTS (Mpa)	EL (%)	ROA (%)	Hardness (HBW)	Energy value (J) No. 1	No. 2	No. 3	Average (J)
						Min		0.6	0.15										250	485	22	30	143	21J (S)			27J
						Max	0.21	1.35	0.3	0.03	0.03	0.3	0.12	0.4	0.4	0.05	0.02	0.43		655			197				
00006	CLOSURE-RF-FORG	9K-RS-11-V-073	100	12E475	12E475		0.2	0.95	0.21	0.005	0.01	0.07	0.03	0.02	0.03	0.002	0.001	0.38	380	545	35	77	154	135	128	164	142
00007	CLOSURE-RF-FORG	9K-RS-11-V-155	200	12E475	12E475		0.2	0.95	0.21	0.005	0.01	0.07	0.03	0.02	0.03	0.002	0.001	0.38	380	545	35	77	154	135	128	164	142

We hereby certify that the material provided complies with all CVM requirements as stated in the applicable purchase order and certified in accordance to EN 10204-3.1 .

Surveyor's Name, Signature & Date: Dong Cong Inspector's Name, Signature & Date: Wu Lin

Cameron Approved
By: laia Date:10/10/12 10:27

Suzhou Dongwu Forging&Welding Co.,Ltd

MILL TEST CERTIFICATE REPORT

Purchaser: CAMERON Cert. No. 1206076-1 Date: 29/Jul/2012

PO No.:	4503421544	Certificatie type	EN 10204, 3.1, 2004	Tensile Test bar	Dimension (mm)	Section (mm^2)	Length (mm)	Testing Temperature (℃)	Brinell Hardness	Load (Kg)	Location	Impact Test	Testing Temp.	Type	Dim. (mm)	Orientation
Material Specification	ASTM A350 LF2&MS-021009-01-01 REV13	Melting Practice	E.F.										-46℃ max	V-Notch	10 x 10 x 55	Longitudinal
		Test performed on	QTC · Piece □	Actual	12.5	122	50	room temperature	Actual	3000	Surface	Actual	-46	V-Notch	10 x 10 x 55	Longitudinal

Heat Treatment	Temperature( )	Time (h)	Cooling Method
QUENCHED	900ºC	6	In water
TEMPERED	600ºC	9	In Air

Item No	Description	Part No.	Qty	Heat No.	Heat Treatment Lot No.		Chemical Composition % C	Mn	Si	S	P	Cr*	Mo*	Ni*	Cu*	V*	Nb*	CE	Mechanical Properties YS (Mpa)	UTS (Mpa)	EL (%)	ROA (%)	Hardness (HBW)	Impact Test Energy value (J) No. 1	No. 2	No. 3	Average (J)
						Min		0.6	0.15										250	485	22	30	143	16J (S)			20J
						Max	0.21	1.35	0.3	0.03	0.03	0.3	0.12	0.4	0.4	0.05	0.02	0.43		655			197				
00001	CLOSURE-RF-FORG	9K-RS-11-V-493	82	12E432	12E432		0.18	0.92	0.25	0.006	0.012	0.04	0.03	0.04	0.02	0.003	0.002	0.35	380	550	33	75	154	165	160	160	162
00002	CLOSURE-FE FORGING	9K-RS-11-V-116	15	12E432	12E432		0.18	0.92	0.25	0.006	0.012	0.04	0.03	0.04	0.02	0.003	0.002	0.35	380	550	33	75	154	165	160	160	162
00003	CLOSURE-RF-FORG	9K-RS-11-V-073	94	12E432	12E432		0.18	0.92	0.25	0.006	0.012	0.04	0.03	0.04	0.02	0.003	0.002	0.35	380	550	33	75	154	165	160	160	162
00004	CLOSURE-RF-FORG	9K-RS-11-V-295	60	12E432	12E432		0.18	0.92	0.25	0.006	0.012	0.04	0.03	0.04	0.02	0.003	0.002	0.35	380	550	33	75	154	165	160	160	162
00005	CLOSURE-RF-FORG	9K-RS-11-V-276	59	12E432	12E432		0.18	0.92	0.25	0.006	0.012	0.04	0.03	0.04	0.02	0.003	0.002	0.35	380	550	33	75	154	165	160	160	162
00006	BODY FORGING	9K-RS-11-V-030	135	12E432	12E432		0.18	0.92	0.25	0.006	0.012	0.04	0.03	0.04	0.02	0.003	0.002	0.35	380	550	33	75	154	165	160	160	162

We hereby certify that the material provided complies with all CVM requirements as stated in the applicable purchase order and certified in accordance to EN 10204-3.1 .

Surveyor's Name, Signature & Date: Dong Cong Inspector's Name, Signature & Date: Wu Lin

Cameron Approved
By: laia Date:08/16/12 8:20

CAMERON
VALVES & MEASUREMENT

VALVE PRESSURE TEST FORM

PRODUCT/WORK ORDER INFORMATION

PART #: 9K-4C02F01 F02A DESCRIPTION: 02 150 B4B FXF NACE w/WRENCH SERIAL NUMBER(S): 2685969-H010

PRODUCTION ORDER #: 112685969 TEST SPECIFICATION: SA-MI-22

CUSTOMER P/O / CAMERON S/O: CE FRANKLIN 2502834 61

SHELL TEST

Test Medium	Pressure (psig)	Duration (Min)	Shell Test		
Hydrostatic	430	2	☑ Pass	☐ Fail	
Nitrogen Gas			☐ Pass	☐ Fail	

Gage Serial Number	Calibration Due Date	Gage Pressure Range
VG-218	June 28 - 2013	0 - 1000 PSI

SEAT TEST

DOUBLE BLOCK & BLEED TEST N/A ☒

Test Medium	Pressure (psig)	Duration (Min)	Side A Left Seat		Side B Right Seat		Double Block and Bleed Seat	
Hydrostatic	320	2	☑ Pass	☐ Fail	☑ Pass	☐ Fail	☐ Pass	☐ Fail
Nitrogen Gas			☐ Pass	☐ Fail	☐ Pass	☐ Fail	☐ Pass	☐ Fail
Air			☐ Pass	☐ Fail	☐ Pass	☐ Fail		

Gage Serial Number	Calibration Due Date	Gage Pressure Range
VG-218	June 28 - 2013	0 - 1000 PSI

Body Bleed Closed		Charts Required?		Differential?		
	☑ Yes		☐ Yes ☒ No		☒ N/A

Comments/Special Customer Requests:

The above specified requirements have been quality inspected and accepted

Please Print Tested by Allen N Date Feb 7 2013 Serial# 1, 2, 3, 4 Tested by ____ Date ____ Serial# ____

Tested by ____ Date ____ Serial# ____

Reviewed & Approved [signature] QC06 Date 02/08/13 Customer Rep ____ Date ____

CAMERON
VALVES & MEASUREMENT

VALVE PRESSURE TEST FORM

PRODUCT/WORK ORDER INFORMATION

PART #: 9K-AC02F01F02A DESCRIPTION: 02 150 BAB FXF NACE W/WRENCH SERIAL NUMBER(S): 2685969-01 to 10

PRODUCTION ORDER #: 112685969 TEST SPECIFICATION: 5A-MI-22

CUSTOMER P/O / CAMERON S/O: CE FRANKLIN

SHELL TEST

Test Medium	Pressure (psig)	Duration (Min)	Shell Test		
Hydrostatic	430	2	☑ Pass	☐ Fail	
Nitrogen Gas			☐ Pass	☐ Fail	

Gage Serial Number	Calibration Due Date	Gage Pressure Range
G-218	3/28/2013	0 - 600 psi

SEAT TEST — **DOUBLE BLOCK & BLEED TEST** N/A ☒

Test Medium	Pressure (psig)	Duration (Min)	Side A Left Seat		Side B Right Seat		Double Block and Bleed Seat	
Hydrostatic	320	2	☑ Pass	☐ Fail	☑ Pass	☐ Fail	☐ Pass	☐ Fail
Nitrogen Gas			☐ Pass	☐ Fail	☐ Pass	☐ Fail	☐ Pass	☐ Fail
Air			☐ Pass	☐ Fail	☐ Pass	☐ Fail		

Gage Serial Number	Calibration Due Date	Gage Pressure Range
G-218	3/28/2013	0 - 600 psi

Body Bleed Closed	☑ Yes	Charts Required?	☐ Yes ☒ No	Differential?	☒ N/A

Comments/Special Customer Requests:

The above specified requirements have been quality inspected and accepted

Please Print
Tested by Ferney Date Feb. 06, 2013 Serial# 08, 09

Tested by _____ Date _____ Serial# _____

Tested by _____ Date _____ Serial# _____

Reviewed & Approved CCV GC06 Date 02/07/13

Customer Rep _____ Date _____

CAMERON
VALVES & MEASUREMENT

VALVE PRESSURE TEST FORM

PRODUCT/WORK ORDER INFORMATION

PART #: 9K-AC02F01F02A DESCRIPTION: 02 150 BAB FARNACE W/WRENCH SERIAL NUMBER(S): 2685969-01 to 10

PRODUCTION ORDER #: 112685969 TEST SPECIFICATION: 5A-MF-02

CUSTOMER P/O / CAMERON S/O: CE FRANKLIN

SHELL TEST

Test Medium	Pressure (psig)	Duration (Min)	Shell Test	
Hydrostatic	430	2	☑ Pass	☐ Fail
Nitrogen Gas			☐ Pass	☐ Fail

Gage Serial Number	Calibration Due Date	Gage Pressure Range
G-198 / G-211	8/28/2013 / 2/28/2013	0 – 600 psi

SEAT TEST **DOUBLE BLOCK & BLEED TEST** N/A ☒

Test Medium	Pressure (psig)	Duration (Min)	Side A Left Seat		Side B Right Seat		Double Block and Bleed Seat	
Hydrostatic	320	2	☑ Pass	☐ Fail	☑ Pass	☐ Fail	☐ Pass	☐ Fail
Nitrogen Gas			☐ Pass	☐ Fail	☐ Pass	☐ Fail	☐ Pass	☐ Fail
Air			☐ Pass	☐ Fail	☐ Pass	☐ Fail		

Gage Serial Number	Calibration Due Date	Gage Pressure Range
G-198 / G-211	8/28/2013 / 2/28/2013	0 – 600 psi

Body Bleed Closed	☑ Yes	Charts Required?	☐ Yes ☒ No	Differential?	☒ N/A

Comments/Special Customer Requests:

The above specified requirements have been quality inspected and accepted

Please Print
Tested by Francy Date Feb 07 2013 Serial# 05,06,07,10

Tested by _____ Date _____ Serial# _____

Tested by _____ Date _____ Serial# _____

Reviewed & Approved QCCV QC06 Date 02/08/13

Customer Rep _____ Date _____

5Blue
Process Equipment Inc.

RECEIVING INSPECTION REPORT

DATE: SEP 3 0 2013 PURCHASE ORDER# 1108-82

CUSTOMER/OWNER _____ Thermometer

DESCRIPTION OF MATERIAL:	PLATE	TUBE /PIPE	BAR	FITTINGS	

		YES	NO
1	MATERIALS CORRECT TO PURCHASE ORDER:	✓	
2	MTR SUPPLIED WITH MATERIALS	✓	
3	MTR CHECKED AGAINST PACKING SLIP	✓	
4	MTR CORRECT FOR THIS MATERIAL	✓	
5	IS MATERIALS IN GOOD CONDITION (NO DAMAGE):	✓	
6	IS MATERIAL THE SAME SIZE AND SCHEDULE AS REQUIRED ON THE PURCHASE ORDER:	✓	
7	IS MATERIAL THE CORRECT GRADE AS REQUIRED ON THE PURCHASE ORDER	✓	
8	IS THE MATERIAL LEGIBLY MARKED FROM THE SUPPLIER? THIS MAY BE STAMPED or STENCILED (record Grade. Type, Heat # And any other relevant information)	✓	

5 Blue Process Equipment Inc. SEP 3 0 2013 Quality Department

NOTE: If any of these inspection steps cannot be completed the inspector shall notify the QS ASAP. The QS shall make out a NCR detailing the discrepancies and the material in question shall be quarantined until a satisfactory solution to the problem can be resolved. This may include rework or sending the material back to the supplier

Inspector : _____ Signature: _____ Date SEP 3 0 2013

ROSEMARY KUNTZ
SAFETY / MTR
(780) 955-2040E:22

CHANDAN STEEL LIMITED
(GOVT. OF INDIA RECOGNISED EXPORT HOUSE)
ISO 9001 : 2008 CERTIFICATE No. 04 100 011022-E3

ADM. OFFICE: 504, SUKH SAGAR, N. S. PATKAR MARG, MUMBAI 400 007, INDIA
Tel.: 91-22- 66290600. Fax.: 91-22-66290633/34
Website : www.chandansteel.net
Email : csl@chandansteel.net

WORKS: Plot No. 35, G. I. D. C., Umbergaon
Dist Valsad, Gujarat - 396 171.
Tel.: 91-260- 308 9999 Fax.: 91-260 308 9872
E-mail : exports@chandansteel.net

5 Blue Process Equipment Inc. SEP 30 2013 Quality Department

L/c. No.:
L/c. Date:

F824 QC 09A / 02 / 10.12.2012

MILL TEST CERTIFICATE
ACCORDING TO EN 10204 - 3.1 : 2005

Consignee	Test Certificate No. : EXP/00885 - 02/2012-2013
UNIFIED ALLOYS	Date of Issue : 25.01.2013
8835-50 AVENUE EDMONTON, ALBERTA T6E 5H4	P. O. No. : EP-102606
CANADA	SC_No. & Date : 12-13/00507, Dt. 22.12.2012
	Invoice No. & Date : EXP/00885/2012-13 Dtd.25.01.2013

PRODUCT	LENGTH		Net Wt.
	Ordered	Actual	
STAINLESS STEEL ROUND BARS	12' - 14'	12' - 14'	21399 LBS

Heat No.	Grade AISI	Size inches	Tolerance	Process Route
13/16	316/316L	1-1/8"	h9	Electric Melting, A.O.D. Refining, Continuous Casting

CHEMICAL COMPOSITION (Weight %)

	C	Si	Mn	P	S	Cr	Mo	Ni	Cu	Ti	N
Min.	-	-	-	-	-	16.00	2.00	10.00	-	-	-
Max.	0.030	1.00	2.00	0.045	0.030	18.00	3.00	14.00	-	-	-
Results	0.028	0.50	1.51	0.041	0.024	17.24	2.03	10.05	-	-	-

MECHANICAL PROPERTIES

Specified Value	Yield Strength N/mm^2 (Rp0.2)	Tensile Strength N/mm^2 (Rm)	Elongation %	Reduction of area %	Hardness (HB)
Min.	205	515	30	40	-
Max.	-	-	-	-	-
Results	322	640	52	70	198-201

Remarks:
1. Smooth Turned & Centreless Ground.
2. Solution annealed at 1050 °C.
3. PMI test 100% satisfactory.
4. Material is calcium treated.
5. Material is free from radio-active contamination.
6. The material hardness is in Accordance with NACE MR 0175/ISO 15156-3:2009 and NACE MR 0103-2007.
7. The material conforms to ASTM A479/A 479M - 11 & ASME SA479-10a specifications.

WIKA ID # 28515B

BUNDLE NO.: 6 to 8, 13 to 17, 19 to 21, 23, 26 to 28 & 35 COLOUR : GREY

It is hereby certified that the above results are true and correct in every details and are meeting the requirements of specification & purchase order.

B. S. RAUTELA
MANAGER - QUALITY ASSURANCE

WIKA INSTRUMENTS LTD.
28569 F
BV:

5 Blue Process Equipment Inc.
SEP 3 0 2013
Quality Department

CHANDAN STEEL LIMITED

(GOVT. OF INDIA RECOGNISED EXPORT HOUSE)

ISO 9001 : 2008 CERTIFICATE No. 04 100 011022-E3

AD 2000 - MERKBLATT W0 - REGN.No. 07 202 1423 WP 1261 09

PED 97/23/EC - CERTIFICATE No. 07 202 1423 WZ 1261/09

ADM. OFFICE: 504, SUKH SAGAR, N. S. PATKAR MARG,
MUMBAI 400 007, INDIA
Tel.: 91-22- 66290600. Fax.: 91-22-66290633/34
Website : www.chandansteel.net
Email : csl@chandansteel.net
I/c. No. : —
I/c. Date: —

WORKS: Plot No. 35, G. I. D. C., Umbergaon
Dist Valsad, Gujarat - 396 171.
Tel.: 91-260-256 2066/4367/1166. Fax.: 91-260-256 2287
E-mail : exports@chandansteel.net

F824 QC 09/01/01.06.2010

MATERIAL TEST CERTIFICATE
ACCORDING TO EN 10204 - 3.1

UNIFIED ALLOYS (EDMONTON) 8835 - 50 AVENUE, EDMONTON, ALBERTA, CANADA T6E 5H4	Test Certificate No. : EXP/1081-02/2011-12 Date of Issue : 31.03.2012 P. O. No. : EP-96329 Invoice No. & Date : EXP/1081/2011-12 Dtd. 31.03.2012

ITEM DESCRIPTION
STAINLESS STEEL FORGED & FULLY MACHINED FLANGES

Sr.No.	Heat No.	Pcs	Box No.	Wt.Kgs	Grade	Item	Process Route
1	12/388	1200	8 & 15	1968.00	F 316/L	1 1/2" BLRF 150 LBS	Electric Induction Melting, A.O.D. Refining, Continuous Casting & Hot Forging
2	12/339	1385	10, 11, 12, 13, 14 & 16	4676.80	F 316/L	2" BLRF 300 LBS	
3	-	-	-	-	-	-	

CHEMICAL COMPOSITION (Weight %)

Sr.No.	C	Si	Mn	P	S	Cr	Mo	Ni	Cu	Ti	N	OTHERS
1	0.028	0.42	1.70	0.035	0.016	16.55	2.02	10.04	-	-	0.0730	-
2	0.024	0.43	1.41	0.043	0.016	17.10	2.01	10.03	-	-	0.0650	-
3	-	-	-	-	-	-	-	-	-	-	-	-

MECHANICAL PROPERTIES

Sr.No.	0.2% Yield Strength N/mm² ($R_{p0.2}$)	Tensile Strength N/mm² (R_m)	Elongation %	Reduction of Area %	Hardness (B. H. N.)
1	299	611	60	71	184-189
2	297	581	57	74	174-178
3	-	-	-	-	-

Remarks:

1. The material is solution annealed at minimum 1050 °C and water quenched.
2. Material is free from mercury and radio-active contamination and is found within the limits of the background radiation.
3. PMI test 100% satisfactory.
4. Micro Structure Reveals Austenitic grains with annealing twins and is free from carbide (At 500 X).
5. Inter-Granular Corrosion Test as per ASTM A – 262 - 10 (Pr.E) satisfactory.
6. The material conforms to ASTM A 182 – 11, ASME SA 182 - 10 & ASME B16.5 - 09 Specification.
7. Visual and Dimensions inspection 100% satisfactory.
8. The material conforms to NACE MR 0175 / ISO 15156-1:2009 (E).

CHANDAN STEEL LTD. FORGING DIVISION

We hereby certify that, the material described herein,
and supplied are in compliance with the requirements of the order.

B. S. RAUTELA
WORKS INSPECTOR

Rolark Stainless Steel

NAS

6870 HIGHWAY 42 EAST

METALLURGICAL TEST REPORT

NORTH AMERICAN STAINLESS
6870 HIGHWAY 42 EAST
GHENT, KY 41045

Certificate: 770525 1 Mail To: Ship To: Date: 9/17/2012 Page: 1

Customer: 007050 001 Steel: 316/316L

Finish: CD

Your Order: 52749 NAS Order: IN 0153772 01 Corrosion: ASTM A262 Prac E OK

PRODUCT DESCRIPTION:

Round Bar, Annealed, Cold Draw
UNS 31600/31603 EN 10204 3.1, ASTM A484/10
ASTM A276/10, ASTM A479/11, ASTM A182/10 CHEM ONLY,
ASME SA479/10a, ASME SA182/10 CHEM ONLY
AMS 5648L/AMS 5653G, AMS QQS-763B, QQS 763F
SOLUTION ANNEAL TEMP 1900F MIN

REMARKS:

COMPLIES W/REQUIREMENTS OF DFAR 252.225-7014A-1 EU DIRECTIVE 2002.95.EC.RoHS. EAF+AOD+CC. NO WELD REPAIR. MELTED AND MFG IN USA FREE FROM MERCURY AND LOW MELTING ALLOY CONTAMINATION

Product Id	Skid #	Diameter	Size	Weight	-------Length------	Mark	Pieces	Commodity Code
BE7321 4		.3750		1,044	144.00	1	1	

CHEMICAL ANALYSIS CM(Country of Melt) ES(Spain) US(United States) ZA(South Africa) JP(Japan) Chemical Analysis per ASTM A751/08

HEAT	CM	C %	CO %	CR %	CU %	MN %	MO %	N %	NI %	P %
D0J5	US	.0176	.2600	16.7185	.5000	1.3260	2.0000	.0408	10.5150	.0365

S %	SI %
.0225	.3515

MECHANICAL PROPERTIES

Product Id	Loc	Dir	HB No.	.2YS KSI	UTS KSI	RA %	Elng % 2"
BE7321 4	R	L	205.00	79.97	95.55	73.36	43.15

WIKA INSTRUMENTS LTD.
27954 B
BY: MF

Blue Process Equipment Inc. SEP 30 2013 Quality Assurance

NAS hereby certifies that the analysis on this certification is correct. Based upon the results and the accuracy of the test methods used, the material meets the specifications stated. These results relate only to the items tested and this report cannot be reproduced, except in its entirety, without the written approval of NAS.

Technical Dept. Mgr. ERIC HESS 9/17/2012

5Blue
Process Equipment Inc.

RECEIVING INSPECTION REPORT

DATE: SEP 3 0 2013 PURCHASE ORDER# 1108-82

CUSTOMER/OWNER Ball Valves

DESCRIPTION OF MATERIAL:	PLATE	TUBE /PIPE	BAR	FITTINGS	

		YES	NO
1	MATERIALS CORRECT TO PURCHASE ORDER:	✓	
2	MTR SUPPLIED WITH MATERIALS	✓	
3	MTR CHECKED AGAINST PACKING SLIP	✓	
4	MTR CORRECT FOR THIS MATERIAL	✓	
5	IS MATERIALS IN GOOD CONDITION (NO DAMAGE):	✓	
6	IS MATERIAL THE SAME SIZE AND SCHEDULE AS REQUIRED ON THE PURCHASE ORDER:	✓	
7	IS MATERIAL THE CORRECT GRADE AS REQUIRED ON THE PURCHASE ORDER	✓	
8	IS THE MATERIAL LEGIBLY MARKED FROM THE SUPPLIER? THIS MAY BE STAMPED or STENCILED (record Grade. Type, Heat # And any other relevant information)	✓	

5 Blue Process Equipment Inc. SEP 3 0 2013 Quality Department

NOTE: If any of these inspection steps cannot be completed the inspector shall notify the QS ASAP. The QS shall make out a NCR detailing the discrepancies and the material in question shall be quarantined until a satisfactory solution to the problem can be resolved. This may include rework or sending the material back to the supplier

Inspector :_____ Signature: RKuntz Date SEP 3 0 2013

ROSEMARY KUNTZ
SAFETY / MTR
(780) 955-2040E:226

MRC
Global Supplier of Choice®

PACKING LIST

2886579001

Sales Order
Number 2886579001 Page 1
Printed 09/26/13 10:51

Deliver To:	From: 73-750	Customer Purchase Order
5 BLUE PROCESS EQUIPMENT INC 2303 - 8TH ST NISKU AB T9E 7Z3	EDMONTON, AB 5607 - 67 AVENUE NW EDMONTON AB T6B 2R8	P7831-5B1108-82 **Customer Release/Requisition No.** **Ordered by:** ROB MARTIN

Promised - 09/26/13 **Salesman** - TONY MATERI **Ship VIA** - OUR TRUCK **Terms** - NET 30 DAYS
Shipped - 09/26/13 **Phone** - (780) 469-2779 **Freight Terms** - PREPAID & ALLOW A **Customer Ship No.** - 27679-0000

C/W MTRS
DEL PM SEPT 26

CPO Line	Customer Part/Item ID	Quantity Ordered	Backorder	Shipped	U/M	Description	Line No.
	WKM-2168151-23-23-1	1		1	EA	6 WKM B110-CS2-42-S1 BS 150# CS FP 310 B VLV RF B:WCC T:SOUR LH NACE FS	001
	BAL-P-4127-DI	1		1	EA	3 X 4 BALON P-4127-DI DI BALL VLV HANDLE F/3 FP AND LARGER	003
	14C20169	1		1	EA	1-1/2 BALON P-4128-CS CS BALL VLV HANDLE F/2 RP	005
	14C20169	8		8	EA	1-1/2 BALON P-4128-CS CS BALL VLV HANDLE F/2 RP	007
	BAL-LM-10361	9		9	EA	1 BALON LM-10361 3000# CS RP 2PC BB B VLV THD B:CS T: STD LH FS	008

5 Blue Process Equipment Inc. SEP 30 2013 Quality Department

RECEIVED SEP 26 2013

THIS IS NOT AN INVOICE. DO NOT PAY FROM THIS DOCUMENT.

RECEIVED BY -

Tubes-	Box/Bag-	Crates-	Pallets-	1 Pieces-	Bundles-	Picked by- STL	Checked by- FJL	Staged-
Order Weight- 204.70	Material Tot-			Freight- $	.00 Other- $	.00 Tax- $	.00	Total- $ .00

CMPACK (Rev 05/09)

MRC
Global Supplier of Choice®

PACKING LIST

2886579002

Sales Or
Number 2886579002 **Page** 1
Printed 09/26/13 09:07

Deliver To:	**From:** 73-750	**Customer Purchase Order**
5 BLUE PROCESS EQUIPMENT INC 2303 - 8TH ST NISKU AB T9E 7Z3	EDMONTON, AB 5607 - 67 AVENUE NW EDMONTON AB T6B 2R8	P7831-5B1108-82 **Customer Release/Requisition No.** **Ordered by:** ROB MARTIN

Promised - 09/26/13 **Salesman** - TONY MATERI **Ship VIA** - OUR TRUCK **Terms** - NET 30 DAYS
Shipped - 09/26/13 **Phone** - (780) 469-2779 **Freight Terms** - PREPAID & ALLOW A **Customer Ship No.** - 27679-0000

C/W MTRS
DEL PM SEPT 26

CPO Line	Customer Part/Item ID	Quantity Ordered	Backorder	Shipped	U/M	Description	Line No.
	14C10465	1		1	EA	4 BALON 4R-F13-RF 150# CS RP 2PC BB B VLV RF B:WCB T: STD LH FS	002
	14C10270	1		1	EA	2 BALON 2R-F33-RF 300# CS RP 2PC BB B VLV RF B:WCB T: STD LH FS	004
	14C10264	8	2	6	EA	2 BALON 2R-F13-RF 150# CS RP 2PC BB B VLV RF B:WCB T: STD LH FS	006
	14C10582	1		1	EA	3/4 BALON LM-07362 3000# CS FP 2PC BB B VLV THD B:CS T: STD LH FS	009
	14C10582	9		9	EA	3/4 BALON LM-07362 3000# CS FP 2PC BB B VLV THD B:CS T: STD LH FS	010
	14C10576	21		21	EA	1/2 BALON LM-05361 3000# CS RP 2PC BB B VLV THD B:CS T: STD LH FS	011

Blue Process Equipment Inc. SEP 30 2013 Quality Department

RECEIVED SEP 27 2013

THIS IS NOT AN INVOICE. DO NOT PAY FROM THIS DOCUMENT.

RECEIVED BY - .....

Tubes- Box/Bag- Crates- Pallets- 1 Pieces- Bundles- Picked by- REC Checked by- STL Staged-
Order Weight- 284.00 Material Tot- Freight- $ .00 Other- $ .00 Tax- $ .00 Total- $ .00

CMPACK (Rev 05/09)

Valves & Measurement
3250 Briarpark Drive, Suite 300
Houston, TX 77042
Tel: 281-499-8511
www.c-a-m.com

Cameron®
Demco®
Flow Control
Foster®
NAVCO®
General®
Techno
Nutron®
Orbit®
Thornhill Craver®
TruSeal®
WKM®
TBV®

CAMERON

September 21, 2010

To: Whom It May Concern

Subject: DynaSeal 310 Ball Valves
Letter of Compliance

Cameron Valves & Measurements offers this Letter of Certification that DynaSeal 310 Ball Valves conform to the following standards:

A) NACE MR-01-75/ISO 15156 requirements for sour oil and gas applications, when supplied with the following trims:

Valve Size	Body Trim Code	Ball & Stem Trim Code
¼" Through 4" x 3"	CS2, CS3, S8	S2
4"F Through 14" x 12"	CS2, CS3, S8	S1
4"F Through 8"x6" Cl600	CS1, CS2	S2

Bolting in ¼" through 4" x 3" CS2 and CS3 valves is modified for use in full exposure NACE service. Sizes 4" F through 14" x 12" are supplied with bolting for use in NACE service providing it is not subjected to full exposure NACE (i.e. buried or insulated). If buried Nace bolting is required, prices are on application. S8 trim full stainless valves have B8 stainless steel bolting suitable for buried NACE service.

B) Firesafe to API 607 4th edition requirements, when supplied with the following trims:

2 piece design, in sizes 1/4" thru 4"x 3" with seal codes 01, 42, 43, 18, 48, and 60S.
4" full bore and larger with seal codes 01, 42, and 28 (trim 43 in class 600).
Socket weld end 3 piece valves with trim 48.

C) All 4"R and smaller 310 ball valves are marked with B16.34 on the nameplate/body except the 2"FP and 3"RP 3000psi threaded end 310C5. This valve only meets B16.34 with a max pressure rating of 2000psi but is tested in accordance with the requirements of B16.34. All 4" F and larger valves are in compliance with the requirements but none are marked.

If you have any questions, please contact your Cameron Valves & Measurement Sales Representative or the ball valve quotations department at the address shown above.

Sincerely,

Kevin Nix
Product Manager – Distributed Products
Cameron Valves and Measurement

Blue Process Equipment Inc.
SEP 30 2013
Quality Department

Nelsen Steel Company
9400 W. Belmont Ave.
Franklin Park, IL 60131-2898
Tel: (847) 671-9700 Fax: (847) 671-6833

PRODUCT CERTIFICATION

HEAT-LOT NUMBER **0819003**
WORK ORDER **131463**
SUPPLIER **Gerdau Ameristeel**
SALES ORDER / RLS **062411 / 1**
MELT SOURCE/NAFTA **Gerdau Amer./Yes**
COUNTRY OF ORIGIN **U.S.A.**
CAST METHOD **Strand (Billet)**

ISO9000:2001 SRI Quality System Registrar Registration # 2089-01

SOLD TO
Balon Corp.
3245 S. Hattie
Oklahoma City, OK 73129
USA

2SQ-1018

CUSTOMER P.O.	CUSTOMER PART	QUANTITY	BDLS	LADING NO	SHIPMENT DATE
34713	S10183	40,045 LBS	10	00033100	11/13/2008

SPECIFICATION **C20000S10181**
Size = 2.0000, Shape = Cold Drawn RC Square, Grade = 1018, Length = 12' R, Quality Level = STD, Melt Practice = CMS, Testing = Mechanical Tests, Bundle max = 4000 lbs. Treatment = Bar Marked, Min. Red. Ratio 13:1

CERTIFICATION REQUIREMENTS

Chemical

C	Mn	P	S	Si	Cu	Ni	Mo	Cr	Al
.17	.80	.012	.022	.23	.19	.07	.02	.12	0.0

Sn	V	Ti
.008	.004	.001

Mechanical

Bar Marking Code

NIL

TEST	UNITS	HIGH	LOW	AVERAGE
Tensile	**PSI**	**77800**	**77800**	**77800**
Yield Strength	**PSI**	**75300**	**75300**	**75300**
Elongation in 2"	**%**	**22**	**22**	**22**
Reduction of Area	**%**	**62**	**62**	**62**
Rockwell B	**Rock B**	**91**	**91**	**91**

We certify that the above material during its processing or while in our possession was not exposed to mercury or any other metal alloy that is liquid at ambient temperature, that no welding or weld repair was performed on said material, that no Class I or Class II ozone depleting chemicals (ODC's) were used in the manufacture of said material or in any of its components or packaging, and that the finished product described herein was manufactured by Nelsen Steel and Wire L.P. and/or its agents in the United States of America. We further certify that all material cold drawn by Nelsen Steel and Wire L.P. meets or exceeds the requirements of the most recent revisions of ASTM A108 (Level 1) and/or SAE J403 for carbon steels and/or SAE J404 for alloy steels and their referenced documents (including ASTM A29) as a minimum. Also, all chemical and mechanical testing is performed by laboratories that have received or have applied for certification to ISO/IEC 17025-1999. Manufactured in the United States of America.

End of Certification

Blue Process Equipment Inc. SEP 30 2013 Quality Department

We certify that the above metallurgical report of chemical analysis and/or mechanical properties is a true and correct statement of the information relating to the product(s) listed above and conforms to the applicable specifications as indicated on your order. WE FURTHER CERTIFY that the material described herein was monitored and controlled during manufacture in accordance with the "Nelsen Steel Company Quality Assurance Manual" in its most recent revision prior to our issuing date shown.

Certification given and subscribed by: _____

Kenneth A. Koeppl, Quality Manager

Date Printed 11/13/2008

Nelsen Steel Company
9400 W. Belmont Ave.
Franklin Park, IL 60131-2898
Tel: (847) 671-9700 Fax: (847) 671-6833

PRODUCT CERTIFICATION

HEAT-LOT NUMBER **0819003**
WORK ORDER **131463**
SUPPLIER **Gerdau Ameristeel**
SALES ORDER / RLS **062411 / 1**
MELT SOURCE/NAFTA **Gerdau Amer./Yes**
COUNTRY OF ORIGIN **U.S.A.**
CAST METHOD **Strand (Billet)**

ISO9000:2001 SRI Quality System Registrar Registration # 2089-01

SOLD TO
Balon Corp.
3245 S. Hattie
Oklahoma City, OK 73129
USA

2SQ-1018

CUSTOMER P.O.	CUSTOMER PART	QUANTITY	BDLS	LADING NO	SHIPMENT DATE
34713	S10183	40,045 LBS	10	00033100	11/13/2008

SPECIFICATION **C20000S10181**
Size = 2.0000, Shape = Cold Drawn RC Square, Grade = 1018, Length = 12' R, Quality Level = STD, Melt Practice = CMS, Testing = Mechanical Tests, Bundle max = 4000 lbs. Treatment = Bar Marked, Min. Red. Ratio 13:1

CERTIFICATION REQUIREMENTS

Chemical

C	Mn	P	S	Si	Cu	Ni	Mo	Cr	Al
.17	.80	.012	.022	.23	.19	.07	.02	.12	0.0

Sn	V	Ti
.008	.004	.001

Mechanical

Bar Marking Code

NIL

TEST	UNITS	HIGH	LOW	AVERAGE
Tensile	**PSI**	**77800**	**77800**	**77800**
Yield Strength	**PSI**	**75300**	**75300**	**75300**
Elongation in 2"	**%**	**22**	**22**	**22**
Reduction of Area	**%**	**62**	**62**	**62**
Rockwell B	**Rock B**	**91**	**91**	**91**

We certify that the above material during its processing or while in our possession was not exposed to mercury or any other metal alloy that is liquid at ambient temperature, that no welding or weld repair was performed on said material, that no Class I or Class II ozone depleting chemicals (ODC's) were used in the manufacture of said material or in any of its components or packaging, and that the finished product described herein was manufactured by Nelsen Steel and Wire L.P. and/or its agents in the United States of America. We further certify that all material cold drawn by Nelsen Steel and Wire L.P. meets or exceeds the requirements of the most recent revisions of ASTM A108 (Level 1) and/or SAE J403 for carbon steels and/or SAE J404 for alloy steels and their referenced documents (including ASTM A29) as a minimum. Also, all chemical and mechanical testing is performed by laboratories that have received or have applied for certification to ISO/IEC 17025-1999. Manufactured in the United States of America.

End of Certification

Blue Process Equipment Inc. SEP 30 2013 Quality Department

We certify that the above metallurgical report of chemical analysis and/or mechanical properties is a true and correct statement of the information relating to the product(s) listed above and conforms to the applicable specifications as indicated on your order. WE FURTHER CERTIFY that the material described herein was monitored and controlled during manufacture in accordance with the "Nelsen Steel Company Quality Assurance Manual" in its most recent revision prior to our issuing date shown.

Certification given and subscribed by: _____

Kenneth A. Koeppl, Quality Manager

Date Printed 11/13/2008

BALON CORPORATION
(Ball Valves, Check Valves, Needle Valves)

3245 S. Hattie Avenue
Oklahoma City, OK 73129
Telephone: (405) 677-3321
Facsimile: (405) 677-3917

August 2, 2012

MRC Midfield
502 25th Avenue
Nisku, AB T9E 0K5

Re: 2R-F33N-RF
3F-F33N-RF
3R-F33N-RF

CERTIFICATE OF API Q1 COMPLIANCE

This certificate verifies that all Balon valves, including the referenced valves, have been designed and manufactured to meet the requirements of the API Q1 Quality System.

Thomas Davies
Quality Manager
Balon Corporation



BALON CORPORATION
(Ball Valves, Check Valves, Needle Valves)

3245 S. Hattie Avenue
Oklahoma City, OK 73129
Telephone: (405) 677-3321
Facsimile: (405) 677-3917

August 2, 2012

MRC Midfield
502 25th Avenue
Nisku, AB T9E 0K5

Re: 2R-F33N-RF
3F-F33N-RF
3R-F33N-RF

CERTIFICATE OF NACE COMPLIANCE

Balon certifies that the following valves meet the requirements of the current edition of NACE Standard MR-01-75: ISO 15156-2, Region 3 and ISO 15156-3.

Series "F" Carbon Steel Ball Valves – Meet NACE if the letter "N" is in the valve description – example: 4F-F63N-RF

Thomas Davies
Quality Manager
Balon Corporation

5 Blue Process Equipment Inc.
SEP 30 2013
Quality Department

BALON CORPORATION
(Ball Valves, Check Valves, Needle Valves)

3245 S. Hattie Avenue
Oklahoma City, OK 73129
Telephone: (405) 677-3321
Facsimile: (405) 677-3917

August 2, 2012

MRC Midfield
502 25th Avenue
Nisku, AB T9E 0K5

Re: 2R-F33N-RF
3F-F33N-RF
3R-F33N-RF

CERTIFICATE OF ASME / ANSI HYDROTEST

Balon certifies that the referenced valves were hydrostatically tested by Balon Corporation according to the test method required in ASME / ANSI Standard B16.34. The testing schedule is detailed below.

Testing Schedule:

	Shell Testing:	Seat Testing:
Pressure Class	Gage Pressure, psig	Gage Pressure, psig
150	450	325
300	1125	825
600	2250	1650
900	3350	2450
1500	5575	4100

Valve Size	Minimum Test Time, sec	Minimum Test Time, sec
≤ 2"	15	15
2 ½" – 8"	60	30
≥10"	180	60



Thomas Davies
Quality Manager
Balon Corporation

BALON CORPORATION
(Ball Valves, Check Valves, Needle Valves)

3245 S. Hattie Avenue
Oklahoma City, OK 73129
Telephone: (405) 677-3321
Facsimile: (405) 677-3917

August 2, 2012

MRC Midfield
502 25th Avenue
Nisku, AB T9E 0K5

Re: 2R-F33N-RF
3F-F33N-RF
3R-F33N-RF

CERTIFICATE OF ORIGIN

All Balon valves are manufactured by Balon Corporation. All raw materials purchased by Balon are domestic. Balon's machining, assembly and testing are performed in Balon's plant in Oklahoma City, State of Oklahoma, United States of America.

Thomas Davies
Quality Manager
Balon Corporation



BALON CORPORATION
(Ball Valves, Check Valves, Needle Valves)

3245 S. Hattie Avenue
Oklahoma City, OK 73129
Telephone: (405) 677-3321
Facsimile: (405) 677-3917

September 6, 2012

MCR Midfield
502 25th Avenue
Nisku, AB T9E 0K6

Re: LM-10361-N

CERTIFICATE OF API Q1 COMPLIANCE

This certificate verifies that all Balon valves, including the referenced valves, have been designed and manufactured to meet the requirements of the API Q1 Quality System.

Thomas Davies
Quality Manager
Balon Corporation

5 Blue Process Equipment Inc.
SEP 30 2013
Quality Department

BALON CORPORATION
(Ball Valves, Check Valves, Needle Valves)

3245 S. Hattie Avenue
Oklahoma City, OK 73129
Telephone: (405) 677-3321
Facsimile: (405) 677-3917

September 6, 2012

MCR Midfield
502 25th Avenue
Nisku, AB T9E 0K6

Re: LM-10361-N

CERTIFICATE OF NACE COMPLIANCE

Balon certifies that the following valves meet the requirements of the current edition of NACE Standard MR-01-75: ISO 15156-2, Region 3 and ISO 15156-3.

Series "LS" Stainless Ball Valves

Series "F" Aluminum Bronze Ball Valves

Series "S" Stainless Steel Ball Valves

Series "LM" Carbon Steel Ball Valves –	Meet NACE if the letter "N" is in the valve description – example: LM-05361-N
Series "F" Ductile Iron Ball Valves –	Meet NACE if the letter "N" is in the valve description – example: 2R-F92N-SE
Series "S" Carbon Steel Ball Valves –	Meet NACE if the letter "N" is in the valve description – example: 2R-S93N-SE
Series "S" Ductile Iron Ball Valves –	Meet NACE if the letter "N" is in the valve description – example: 2R-S92N-SE

Thomas Davies
Quality Manager
Balon Corporation

Blue Process Equipment Inc.
SEP 30 2013
Quality Department

BALON CORPORATION
(Ball Valves, Check Valves, Needle Valves)

3245 S. Hattie Avenue
Oklahoma City, OK 73129
Telephone: (405) 677-3321
Facsimile: (405) 677-3917

September 6, 2012

MCR Midfield
502 25th Avenue
Nisku, AB T9E 0K6

Re: LM-10361-N

CERTIFICATE OF ORIGIN

All Balon valves are manufactured by Balon Corporation. All raw materials purchased by Balon are domestic. Balon's machining, assembly and testing are performed in Balon's plant in Oklahoma City, State of Oklahoma, United States of America.

Thomas Davies
Quality Manager
Balon Corporation

S Blue Process Equipment Inc.
SEP 30 2013
Quality Department

5Blue
Process Equipment Inc.

RECEIVING INSPECTION REPORT

DATE: SEP 3 0 2013 **PURCHASE ORDER#** 1108-82

CUSTOMER/OWNER Turbine Meter

DESCRIPTION OF MATERIAL:	PLATE	TUBE /PIPE	BAR	FITTINGS	

		YES	NO
1	MATERIALS CORRECT TO PURCHASE ORDER:	✓	
2	MTR SUPPLIED WITH MATERIALS	✓	
3	MTR CHECKED AGAINST PACKING SLIP	✓	
4	MTR CORRECT FOR THIS MATERIAL	✓	
5	IS MATERIALS IN GOOD CONDITION (NO DAMAGE):	✓	
6	IS MATERIAL THE SAME SIZE AND SCHEDULE AS REQUIRED ON THE PURCHASE ORDER:	✓	
7	IS MATERIAL THE CORRECT GRADE AS REQUIRED ON THE PURCHASE ORDER	✓	
8	IS THE MATERIAL LEGIBLY MARKED FROM THE SUPPLIER? THIS MAY BE STAMPED or STENCILED (record Grade. Type, Heat # And any other relevant information)	✓	

5 Blue Process Equipment Inc. SEP 3 0 2013 Quality Department

NOTE: If any of these inspection steps cannot be completed the inspector shall notify the QS ASAP. The QS shall make out a NCR detailing the discrepancies and the material in question shall be quarantined until a satisfactory solution to the problem can be resolved. This may include rework or sending the material back to the supplier

Inspector: ROSEMARY KUNTZ Signature: _____ Date SEP 3 0 2013

SAFETY / MTR
(780) 955-2040E:226

CAMERON

Cameron Measurement
3707 - 97 Street
Edmonton, AB
T6E 6J2
(780) 463-6868

Please be advised, this shipment contains;

Packages	Shipping Name	Class	UN Number	PG	Weight
1	**Lithium Metal Batteries Contained in Equipment**	**9 MISC**	**UN3091**	**II**	11.4 kg
x	**Lithium Metal Batteries**	**9 MISC**	**UN3090**	**II**	x

The package (S) contain lithium metal batteries and a flammability hazard exist if the package (s) are damaged

Special procedures must be followed in the event the package (s) are damaged to include inspection and repack if necessary

24 HOUR CONTACT NUMBER: 1-613-996-6666 (Canutec)

Address

5 Blue Process Equipment
2803 - 8 ST
Nisku, AB

Tracking
95-1195757

Reference
84955371

Date
23-Sep-13

5 Blue Process Equipment Inc. SEP 30 2013 Quality Department

Shipper

Carrier

CAMERON

Cameron Measurement
3707 - 97 Street
Edmonton, AB
T6E 6J2
(780) 463-6868

Please be advised, this shipment contains;

Packages	Shipping Name	Class	UN Number	PG	Weight
1	**Lithium Metal Batteries Contained in Equipment**	**9 MISC**	**UN3091**	**II**	11.4 kg
x	**Lithium Metal Batteries**	**9 MISC**	**UN3090**	**II**	x

The package (S) contain lithium metal batteries and a flammability hazard exist if the package (s) are damaged

Special procedures must be followed in the event the package (s) are damaged to include inspection and repack if necessary

24 HOUR CONTACT NUMBER: 1-613-996-6666 (Canutec)

Address

5 Blue Process Equipment
2803 - 8 ST
Nisku, AB

Tracking
95-1195757

Reference
84955371

Date
23-Sep-13

5 Blue Process Equipment Inc. SEP 30 2013 Quality Department

Shipper

Carrier

5Blue
Process Equipment Inc.

RECEIVING INSPECTION REPORT

DATE: SEP 3 0 2013 PURCHASE ORDER# 1108-82

CUSTOMER/OWNER _____ Ball / Globe / Gate / Check Valves

DESCRIPTION OF MATERIAL:	PLATE	TUBE /PIPE	BAR	FITTINGS	

		YES	NO
1	MATERIALS CORRECT TO PURCHASE ORDER:	✓	
2	MTR SUPPLIED WITH MATERIALS	✓	
3	MTR CHECKED AGAINST PACKING SLIP	✓	
4	MTR CORRECT FOR THIS MATERIAL	✓	
5	IS MATERIALS IN GOOD CONDITION (NO DAMAGE):	✓	
6	IS MATERIAL THE SAME SIZE AND SCHEDULE AS REQUIRED ON THE PURCHASE ORDER:	✓	
7	IS MATERIAL THE CORRECT GRADE AS REQUIRED ON THE PURCHASE ORDER	✓	
8	IS THE MATERIAL LEGIBLY MARKED FROM THE SUPPLIER? THIS MAY BE STAMPED or STENCILED (record Grade. Type, Heat # And any other relevant information)	✓	

5 Blue Process Equipment Inc. SEP 3 0 2013 Quality Department

NOTE: If any of these inspection steps cannot be completed the inspector shall notify the QS ASAP. The QS shall make out a NCR detailing the discrepancies and the material in question shall be quarantined until a satisfactory solution to the problem can be resolved. This may include rework or sending the material back to the supplier

Inspector : _____ Signature: _____ Date SEP 3 0 2013

ROSEMARY KUNTZ
SAFETY / MTR
(780) 955-2040E:226

MRC
Global Supplier of Choice

PACKING LIST

2873427001

Sales Order Number 2873427001 Page 1
Printed 09/24/13 08:53

Deliver To:	From: 73-750	Customer Purchase Order
5 BLUE PROCESS EQUIPMENT INC 2303 - 8TH ST NISKU AB T9E 7Z3	EDMONTON, AB 5607 - 67 AVENUE NW EDMONTON AB T6B 2R8	P7751-5B1108-82 Customer Release/Requisition No. Ordered by: ROB MARTIN

Promised - 10/08/13 Salesman - MARIUS NELSON Ship VIA - OUR TRUCK Terms - NET 30 DAYS
Shipped - 09/24/13 Phone - (780) 469-2779 Freight Terms - COLLECT Customer Ship No. - 27679-0000

LET MARIUS KNOW WHEN IT IS HERE SO I
CAN CHANGE SHIP DATE. DONT SHIP UNTIL
10/08/13
MTR'S REQUIRED

CPO Line	Customer Part/Item ID	Quantity Ordered	Backorder	Shipped	U/M	Description	Line No.
	14C11110	2		2	EA	12 GROVE 9K-5012F01FO1A 150# CS FP B5 B VLV RF B:A350 LF2 T:SLT GO NACE CSA Z2 MFG NAME: GROVE HEAT/LOT/SERIAL # 2858472-01 MFG NAME: GROVE HEAT/LOT/SERIAL # 2744032	001
	09C40360	2		2	EA	2 VELAN F-0074C-02TY 150# CS BB GLOBE VLV RF B:WCB T:8 MFG NAME: VELAN HEAT/LOT/SERIAL # BND29D15 MFG NAME: VELAN HEAT/LOT/SERIAL # BNC07M28 MFG NAME: VELAN HEAT/LOT/SERIAL # BND16C28 MFG NAME: VELAN HEAT/LOT/SERIAL # BNC07M26	002
	11C20632	1		1	EA	1-1/2 VELAN W-2074B-02TY 800# FS BB GLOBE VLV SW B:A105/WCB T:8 MFG NAME: VELAN HEAT/LOT/SERIAL # MMHPC1/MMFKU2	003
	11C11989	2		2	EA	1-1/2 VELAN C-2054B-02TY 800# FS BB GATE VLV SWXTHD B:A105/WCB T:8 MFG NAME: VELAN HEAT/LOT/SERIAL # MMHUI6/MMIBF2	004
	11C10852	1		1	EA	1-1/2 VELAN W-2054B-02TY 800# FS BB GATE VLV SW B:A105/WCB T:8 MFG NAME: VELAN HEAT/LOT/SERIAL # MMHPC1/MMFOU5	005
	14CZ0939	2		2	EA	1 ARGUS V1000005 1500# CS CHK VLV MFG NAME: ARGUS HEAT/LOT/SERIAL # H2087	006

5 Blue Process Equipment Inc. SEP 30 2013 Quality Department

RECEIVED SEP 25 2013

THIS IS NOT AN INVOICE. DO NOT PAY FROM THIS DOCUMENT.

RECEIVED BY - _____

Tubes-	Box/Bag-	Crates-	Pallets-	2	Pieces-	Bundles-	Picked by-	REC	Checked by-	STL	Staged-
Order Weight-	3651.00	Material Tot-			Freight- $	.00	Other- $	.00	Tax- $	.00	Total- $ .00

CMPACK (Rev 05/09)

VELAN

INSPECTION CERTIFICATE
EN-10204-3.1

Certificate #: 73810

Plant 4 Velan Inc.
1010 Cowie Street
Granby, Quebec
Canada, J2J 1E7
Phone 450-378-2305
Fax 450-378-6865

Customer Name : MRC CANADA ULC.
Customer Po # : S78H218475
Design Spec : ASME B16.34
Drawing Number : N/A Rev. N/A
Tag Number(s) : NONE

Velan Order # : M014-869528-W
Item Number : 51 Position No : 95
Quantity : 6
Figure Number : W07-2074B-02TY
Description : VALVE 1 1/2" 800 GLOBE BB

NOTES :

Test Standard: ASME B16.34 / MSS SP-61 Dimensional Examination: ACCEPTABLE Markings MSS SP-25: ACCEPTABLE Visual: ACCEPTABLE

Test Type		Shell	Packing	Seat (H.P.)	Seat (L.P.)	Backseat
Duration	(sec)	15	15	15	N/A	15
Pressure	(psig)	2975	2975	2175	N/A	2975
Result		ACCEPTABLE	ACCEPTABLE	ACCEPTABLE	N/A	ACCEPTABLE

MATERIAL TEST RESULTS SHOWN BELOW:

CHEMICALS

MECHANICALS

Supplier : MM
Heat Code : MMFKU2
ASTM Code: A105-11--
Description: BONNET

Carbon (C)	0.200	Manganese (Mn)	0.960	Phosphorous (P)	0.014
Sulfur (S)	0.020	Silicon (Si)	0.220	Copper (Cu)	0.019
Nickel (Ni)	0.016	Chromium (Cr)	0.120	Molybdenum (Mo)	0.002
Vanadium (V)	0.002				
C.E.	0.387				

Tensile (MPa)	518.000	Tensile (ksi)	75.130
Yield (MPa)	357.000	Yield (ksi)	51.778
Elongation (%)	35.040	Reduction Of Area (%)	65.330
Hardness (HB)	152.000	Hardness (HB)	159.000
Heat Treatment	NORMALIZED		

Supplier : MM
Heat Code : MMHPC1
ASTM Code: A105-11--
Description: BODY

Carbon (C)	0.190	Manganese (Mn)	0.940	Phosphorous (P)	0.015
Sulfur (S)	0.019	Silicon (Si)	0.250	Copper (Cu)	0.034
Nickel (Ni)	0.027	Chromium (Cr)	0.120	Molybdenum (Mo)	0.005
Vanadium (V)	0.003				
C.E.	0.376				

Tensile (MPa)	523.000	Tensile (ksi)	75.855
Yield (MPa)	361.000	Yield (ksi)	52.359
Elongation (%)	35.440	Reduction Of Area (%)	63.610
Hardness (HB)	159.000	Hardness (HB)	163.000
Heat Treatment	NORMALIZED		

5 Blue Process Equipment Inc. SEP 30 2013 Quality Department

VELAN

INSPECTION CERTIFICATE
EN-10204-3.1

Certificate #: 73810

Velan certifies that all valve(s) described above are in compliance with purchase order and specification requirements.

Cathy O'Donnell

Cathy O'Donnell for — Manager of Q.C. Documentation

27-JUN-2013 — Date

Customer Representative

Date

Blue Process Equipment Inc.
SEP 30 2013
Quality Department

VELAN

INSPECTION CERTIFICATE
EN-10204-3.1

Certificate #: 75291

Plant 4 Velan Inc.
1010 Cowie Street
Granby, Quebec
Canada, J2J 1E7
Phone 450-378-2305
Fax 450-378-6865

Customer Name :	MRC CANADA ULC.
Customer Po # :	S759225013
Design Spec :	API 602
Drawing Number :	N/A Rev. N/A
Tag Number(s) :	NONE

Velan Order # :	M014-870278-W	
Item Number :	33	Position No : 70
Quantity :	12	
Figure Number :	C07-2054B-02TY	
Description :	VALVE 1 1/2" 800 GATE BB A105N	

NOTES :

Test Standard: API 602 Dimensional Examination: ACCEPTABLE Markings MSS SP-25: ACCEPTABLE Visual: ACCEPTABLE

Test Type		Shell	Packing	Seat (H.P.)	Seat (L.P.)	Backseat
Duration	(sec)	15	15	N/A	15	15
Pressure	(psig)	2975	2975	N/A	80	2975
Result		ACCEPTABLE	ACCEPTABLE	N/A	ACCEPTABLE	ACCEPTABLE

MATERIAL TEST RESULTS SHOWN BELOW:

CHEMICALS

MECHANICALS

Supplier : MM
Heat Code : MMHUI6
ASTM Code: A105-11–
Description: BODY

Carbon (C)	0.190	Manganese (Mn)	0.940	Phosphorous (P)	0.020
Sulfur (S)	0.030	Silicon (Si)	0.240	Copper (Cu)	0.014
Nickel (Ni)	0.026	Chromium (Cr)	0.130	Molybdenum (Mo)	0.003
Vanadium (V)	0.003				
C.E.	0.377				

Tensile (MPa)	522.000	Tensile (ksi)	75.710
Yield (MPa)	360.000	Yield (ksi)	52.214
Elongation (%)	35.040	Reduction Of Area (%)	64.190
Hardness (HB)	159.000	Hardness (HB)	163.000
Heat Treatment	NORMALIZED		

Supplier : MM
Heat Code : MMIBF2
ASTM Code: A105-11–
Description: BONNET

Carbon (C)	0.190	Manganese (Mn)	0.950	Phosphorous (P)	0.014
Sulfur (S)	0.029	Silicon (Si)	0.170	Copper (Cu)	0.016
Nickel (Ni)	0.016	Chromium (Cr)	0.110	Molybdenum (Mo)	0.003
Vanadium (V)	0.003				
C.E.	0.374				

Tensile (MPa)	523.000	Tensile (ksi)	75.855
Yield (MPa)	358.000	Yield (ksi)	51.923
Elongation (%)	34.680	Reduction Of Area (%)	63.610
Hardness (HB)	156.000	Hardness (HB)	167.000
Heat Treatment	NORMALIZED		

Blue Process Equipment Inc.
SEP 30 2013
Quality Department

VELAN

INSPECTION CERTIFICATE
EN-10204-3.1

Certificate #: 75291

Velan certifies that all valve(s) described above are in compliance with purchase order and specification requirements.

Cathy O'Donnell

Cathy O'Donnell for — 22-AUG-2013

Manager of Q.C. Documentation — Date

Customer Representative — Date

Blue Process Equipment Inc.
SEP 30 2013
Quality Department

Material Test Report

VELAN

VELAN INC.
7007 Cote de Liesse
Montreal
Canada H4T 1G2

Customer Name : MRC

Valve Description : 1 1/2 IN 800 class GATE

Figure Number : W-2054B-02TY

Quantity : 1

Date : 24-SEP-13

MATERIAL TEST RESULTS SHOWN BELOW:

IMPERIAL

CHEMICALS

MECHANICALS

[Yied & UTS (Tensile)=Ksi; Elong. & R.A.=%; F/B=Flattening/Bending; GS=Grain Size]

ASTM Code: A105-11-- NORMALIZED

HEAT CODE	(C)	(Mn)	(P)	(S)	(Si)	(Cu)	(Ni)	(Cr)	(Mo)	(V)	YIELD	UTS	Elong	R.A.	Hard. (HB)	Impact (ft-lb) at °F	F/B	GS	DESCR.
MMHPC1	0.190	0.940	0.015	0.019	0.250	0.034	0.027	0.120	0.005	0.003	52.4	75.9	35.4	63.6	159.0 / 163.0	/ /			BODY

CHEMICALS

MECHANICALS

[Yied & UTS (Tensile)=Ksi; Elong. & R.A.=%; F/B=Flattening/Bending; GS=Grain Size]

ASTM Code: A105-11-- NORMALIZED

HEAT CODE	(C)	(Mn)	(P)	(S)	(Si)	(Cu)	(Ni)	(Cr)	(Mo)	(V)	YIELD	UTS	Elong	R.A.	Hard. (HB)	Impact (ft-lb) at °F	F/B	GS	DESCR.
MMFOU5	0.190	0.970	0.019	0.020	0.240	0.013	0.031	0.130	0.003	0.002	51.8	75.1	35.7	63.8	152.0 / 159.0	/ /			BONNET/COVER

All Velan valves are tested in accordance with specification required by the design. Valves designed to API specifications API 594, API 600, API 602, API 603, API 608 and API 609 are tested to API 598. Valves designed to B16.34 are tested to B16.34 and MSS-SP-61.

This report is issued by a computerized system and is valid without signature. The chemical and mechanical reports and testing criteria for the customer selected heat code are validated by Velan. All header info on this certificate (including customer name, valve description, figure number and quantity) has been supplied by the user of the VelCert application.

Blue Process Equipment Inc.
SEP 30 2013
Quality Department

CAMERON

VALVES & MEASUREMENT

Monday, 09-Jul-2012

From:

Cameron Canada
3707 97 Street
Edmonton, Alberta, Canada
T6E 6J2
Phone : 780-468-2732

To:

Subject:

Serial	2858472	Quantity/Series	-01

Comments:

Part #: 9K-5012F01FO1A

Description: 12" 150 B5 FXF NACE W/G.O.

Sales Order: n/a

Customer PO: n/a

5 Blue Process Equipment Inc.
SEP 30 2013
Quality Department

MTRs produced using MetalTrace®. Visit www.TraceApps.com or call toll-free 1-866-429-7007 for more information.

CAMERON

Monday Aug-26-2013

From:

Cameron Canada Corporation
3707 97 St.
Edmonton,Alberta,Canada
T6E6J2
780-468-2732

www.c-a-m.com

To:

"

Document Summary Page

The MTR's are printed in the following order:

#	Heat #	Heat Code	Job/Serial #	Material #	Product Code
1	XY-0061		2858472	9K-5012F01FO	PLATE-GLAND 12 150/900 B5
2	217820		2858472	9K-5012F01FO	BODY FORGING 12 150/900 B5
3	A104831		2858472	9K-5012F01FO	(NP) STEM, GROVE B5, 12 150/600,4140 MAT'L
4	8417	QB	2858472	9K-5012F01FO	BALL A350 LF2 ENC 12 150/900 B5/D2
5	204597		2858472	9K-5012F01FO	CLOS-FE FORGING CONTOURED 12 150 B5
6	4187-B169N		2858472	9K-5012F01FO	CLOSURE-FE FORGING LF2 12 150 B5
7	GROVE		2858472	9K-5012F01FO	Grove B4, B5 Sour Low Temp.

SUZHOU DONGWU FORGING AND WELDING PLANT

MATERIAL CERTIFICATION

Ref. PO#77185

Conforms to DIN 50049.3.1 & BS EN 10204.3.1

QTY: 52pcs

CUSTOMER NAME	ACM Machining, Inc	Melting Practice	HEAT	QUENCHED	QUENCHED	TEMPERED	CERT. NO.	ACM-185
SPECIFICATION	ASTM A350-04 LF2 CLASS 1	EF+VD	TREATMENT	900°C	IN WATER	620°C	CERT .DATE	Oct 20,2011

Item No.	Forging Logo.	Heat No.	QTY	Part No.	Desc.	Chemical Composition (%)												Mechanical Properties							
																		Yield	Tensile	EL2"	Roa	HB	Impact		
						C	Mn	Si	S	P	Cr*	Mo*	Ni*	Cu*	V*	Nb*	CE	(MPa)	(MPa)	(%)	(%)		(J @-46°C)		
					Min.		0.60	0.15										300	485	22	30		27(A)/22(S)		
					Max.	0.23	1.35	0.30	0.035	0.035	0.3	0.12	0.4	0.4	0.05	0.02	0.43		655			197			
1	XY	XY-0061	27	BAR-6.750-00700	6.750"Round Bar	0.20	0.92	0.26	0.003	0.019	0.02	0.0006	0.01	0.03	0.0034		0.36	375	556	33	76	158	104	86	128
2	XY	XY-0061	25	BAR-7.000-00700	7.000"Round Bar	0.20	0.92	0.26	0.003	0.019	0.02	0.0006	0.01	0.03	0.0034		0.36	375	556	33	76	158	104	86	128

VISUAL INSPECTION:PASSED
Charpy Speciman Size: 10MMX10MMX55MM
CVN Orientation: Longitudinal

QUALITY INSPECTOR: Dong Cong **QUALITY MANAGER:** Wu Lin

CAMERON
AUG 23 2013
Q.C. APPROVED
XSV QC01

Part No. 20092
Lot No. 6550

ACM Machining Inc. hereby certify that all test results and process information contained in this report are correct and true as contained in the records of the company and meet purchase order and or specification requirements.

WE CERTIFY THAT HEAT TEST NO.	XY-0061	DATE	8/13/13
WAS USED TO MAKE PART NO.	9K-293-12046-V2	PO NO	4503890281
ACM QUALITY DEPT	Maria Gallant	QUANTITY	40

METALLURGICA siderforge s.r.l.

36010 COGOLLO DEL CENGIO (VI) ITALY - Via M. Schirn, 2 Tel.0445 802222 - Fax 0445 802202

Inspection Certificate

Quality Control Department

N° 4875 / 13 REV.0 Date 11/07/2013

Purchaser:
CAM SURFACE SYS-EDMONTON CAMERON
CANADA
5003 93RD STREET
T6E5S9 EDMONTON AB - CANADA

Order No.: 4503807018

SIDERFORGE job No.: 131386

Certificate type: EN 10204 ed. MARCH 2005 ☐ 2.2. ☑ 3.1. ☐ 3.2

Melting practice ☑ E.F.V.D. ☐ E.F. ☐ AOD ☐ VOD

CHEMICAL ANALYSIS / LADLE ANALYSIS

MATERIAL: ASTM A 350 LF2 HEAT: 217820 / SUPPLIER: ACCIAIERIE VENETE S.p.A.

C	Mn	Si	Ni	Cr	S	P	Al	Cu	Mo	Ti	V	Nb	N	H	B			
%	%	%	%	%	%	%	%	%	%	%	%	%	%	ppm	%			
0,179	1,19	0,234	0,123	0,106	0,006	0,012	0,026	0,166	0,032	0,01	0,028	0,004	0,0074	1,5	0,0003			

C.E. (Long) = 0,429

HEAT TREATMENT

TYPE	TEMP °C	HOURS	COOLING	TYPE	TEMP °C	HOURS	COOLING
NORMALIZING	900	5,30	AIR				

MECHANICAL TESTS

FROM PIECE ☐
FROM QTC ☑

Treated with the Pcs

REQUIRED	UTS MPa	YS 0.2 MPa	YS MPa	EL %	RA %	IMPACT TEST Dir.	Type	Temp °C	Av.Min J			HB on pieces Min	Max
MIN	485	250		22	30	TAN	KV	-46	20	16		143	197
MAX	655												

OBTAINED

N° TEST	DIM mm	SECT. mm	LENGHT mm	TEMP °C	DIR	UTS MPa	YS 0.2 MPa	YS MPa	EL %	RA %	IMPACT TEST Dir.	Type	Temp °C	JOULE			HB on pieces Min	Max
3744	12,50	122,66	50,00	+20	TAN	495	312		36,8	72,1	TAN	KV	-46	54	38	69	148	148

OUR ITEM	CUSTOMER ITEM	DESCRIPTION	DRAWING		QUANTITY
7	from 00007 to 00007	BODY FORGING 12 150/900 578x478x353 F	RS-11-V-0552043	RS-11-V-0552043	15
	from to				
	from to				
	from to	12" 150/900# Bodies			
	from to				
	from to				

SOUTH PLANT
QC ACCEPT MAT'L TYPE
VEN # 10040237
PO # 4503807018
MAT'L A350LF2
DATE/QC AUG 08 2013

REMARKS:
MONITORING TEMPERATURE BY CONTACT THERMOCOUPLES ACCORDING TO METHOD A ACCORDING TO SPEC. MS-021000-01 REV. 06.
PIECES CONFORMING TO DIMENSIONAL AND VISUAL CONTROL.
HEAT TREATMENT FURNACE IS CALIBRATED ACCORDING TO API 6A 20° ED. ANNEX M. HBN OBTAINED ON Q.T.C.: 148.
MATERIAL ACCORDING TO SPEC. MS-021009 REV. 13 DASH 01-01 REV. 10. IMPACT TEST SIZE IS 10x10 mm.
SAMPLING MECHANICAL TEST AT 1/4 T FROM Q.T.C. SIZE: 5"x5". MATERIAL SUPPLIED IS FREE FROM RADIOACTIVE CONTAMINATION.
COUNTRY OF ORIGIN: ITALY.

Material conforming ☑
Material non conforming ☐

Q.C. Dall'Osteria Luca

Surveyor:

TC Industries Test Center
3703 South Route 31
Crystal Lake, IL 60012-1412
Telephone 815/459/2400 Fax 815/459/3419

ACCREDITED
Testing Cert #1281-01

TEST REPORT

REPORT NO: 150998
DATE: JANUARY 24, 2011

TO: SUNBELT STEEL CO - TURRET
527 ATANDO AVENUE
ATTN: RHONDA
CHARLOTTE, NC 28206

SHIP TO: SUNBELT STEEL CO - TURRET
527 ATANDO AVENUE
ATTN: RHONDA
CHARLOTTE, NC 28206

DESC: 25 PCS 4"RD X 20' PO: 64873A		HEAT#: A104831 MO: 103562	GRADE: 4140 CO: 64873	WT: 21800 LOT: 70367
SPEC: QUENCH,TEMPER,STRAIGHTEN, COOPER CAMERON SPEC.MS-012502- 197/237 HBW @ SURF/100T/75Y		STRESS RELIEVE 01-03 PER CAMERON REV 2/EL18% CVN 15FT/LBS@-50F/REPORT MECH		
PROCESS: FURN TEMP : 1600 TEMPER TEMP: 1300 STRESS TEMP: 1200		FURN TIME hh.mm: 2.40 TEMPER TIME hh.mm: 4.00 STRESS TIME hh.mm: 4.00		QUENCH: WATER

PARAMETER	UNITS	LIMITS		TEST RESULTS					
TENSILE	KSI	100	N/A	118.0	114.0				
YIELD .2%	KSI	75	N/A	95.5	91.5				
ELONG 2"	%	18	N/A	24.0	24.0				
RED AREA	%	35	N/A	64.0	64.0				
CHARPY	FT-LB	15	N/A	41	44	49			
CVN TEMP	F	-50	-50	-50					
SURFACE HB	HBW	197	237	232	222	233	216	213	229

(See sampling plan on back)

TC INDUSTRIES AND SUBCONTRACTED LABS (A2LA ACCREDITED)

Tensile,Standard TC Tensile,Full Size Charpy V 10mmX10mm TC Microhardness,Knoop*	Rockwell Brinell TC Ultra Sonic* Bend Test*	Micro Analysis* Decarb Measure Chemistry*

TC:TC Test Center	BE:Berg Eng.	EX:Exova	MSI:Metallurgical Ser.
Cert #1281.01	Cert #L1157-1	Cert #104.02	Cert #0510.01
2/28/11	2/4/11	6/30/12	1/31/11

Time 14:20

**not included in our scope of accreditation*

Ken Rueff
Test Center Supervisor

FC 4.12.16F 12/14/10

Cameron Approved
By: laia Date:07/17/13 11:22

There are no deviations from test methods unless noted. It should not be assumed that mechanical properties of raw material heat treated to a fastener standard will have the same properties of a finished fastener whose original material characteristics may have been significantly altered.

No mercury was used/added and no welding/weld repair was performed on this material while in the possession of TC Industries, Inc.

ACM Machining Inc. hereby certify that all test results and process information contained in this report are correct and true as contained in the records of the company and meet purchase order and or specification requirements.

WE CERTIFY THAT HEAT TEST NO.	A104831	DATE	7/11/13
WAS USED TO MAKE PART NO.	9K-295-12016-V1NP	PO NO	4503890281
ACM QUALITY DEPT	Mark Bethel	QUANTITY	25

Steel Dynamics, Inc.
Engineered Bar Products Division

8000 N. County Road 225 East
Pittsboro, IN 46167
Phone: (317) 892-7000
Fax: (317) 892-7285

Certified Material Test Report

Cert # : 98663 | Mill Order : 1012976 | Heat # : A104831 | Issued : 10/27/2010 18:49:46
Work Order : 98075 | Sales Order : 75908-1 | Customer : Turret Steel Industries | PO # : 30319-1
Load # : 119406 | Reference # : | Reference Desc : | End Use :
Size : 4" | Shape : Round | Grade : 4140H | Length : 20'00"
Grain Practice : Al Fine Grain (5-8) per ASTM A29 | Reduction Ratio : 11.4 to 1 | Disposition : 1

Ladle Chemistry Analysis (ASTM A29)

C	Mn	P	S	Si	Al	Cu	Ni	Cr	Mo	Sn	N	V	Cb	B	Ca	W	Ti	DI
0.42	0.82	0.012	0.023	0.26	0.028	0.26	0.12	0.96	0.17	0.011	0.0122	0.003	0.002	0.0000	0.0011	0.000	0.001	5.09

Pb	Co	As	Sb	Zr	Bi	H	Ceq
0.000	0.008	0.005	0.002	0.001	0.001	2.3	0.80

Product Check Analysis (ASTM A29)

	C	Mn	P	S	Si	Al	Cu	Ni	Cr	Mo	Sn	N	V	Cb	Ti	B	Ca
Front																	
Back																	

Jominy (ASTM A255)

	J1	J2	J3	J4	J5	J6	J7	J8	J9	J10	J12	J14	J16	J18	J20	J24	J28	J32
Calc'd	57	57	57	57	57	57	55	54	52	51	48	47	44	43	42	41	38	36
Front																		
Back																		

Microcleanliness (ASTM E45)

Method A								Method C		Method E	
AT	AH	BT	BH	CT	CH	DT	DH	S	O	SAM "B"	SAM "D"

Microcleanliness (DIN 50602)

K			M
S	O	Tot	Tot

Decarb

Depth	% of Diameter

Grainsize

Austenitic	Ferritic
6	

Macrostructure (ASTM E381)

S	R	C
1	1	2

Magnetic Particle Inspection

Frequency	Severity

Mechanical Properties (ASTM A370)

Tensile Properties				Hardness (BHN)	
Tensile Strength	0.2% Yield Strength	% Elong (2")	% ROA	(MR)	(Surf)
				283	

Steel Dynamics - Engineered Bar Products has a quality system in place which has been certified ISO 9001:2008 compliant, including PED certification.

Comments/Specs

ASTM A322 (latest rev.) ---- ASTM A304 (latest rev.) ----- Turret Steel Spec TSI-130 ----- Dual certed to 4140H/4142H

Cameron Approved
By: laia Date:07/17/13 11:25

Condition : As-Rolled, Hot-Rolled

I hereby certify that the content of this report is correct and accurate, and that all tests and operations performed on this material were in compliance with applicable material specifications and purchaser designated requirements.

Garrett Bouyett - Rolling Mill Metallurgist

Any alteration to this report voids Steel Dynamic's warranting of results. No weld repair has been performed on this material. This material is not radioactive and has not been exposed to radioactivity while under the control of Steel Dynamics. This material has not been exposed to mercury while under the control of Steel Dynamics. Unless otherwise noted, this material was melted, continually cast, and rolled in the USA; w/ all testing performed by Steel Dynamics.

Steel Dynamics Rev Level 1 [108] - 241

retrieve_on

ACM Machining Inc. hereby certify that all test results and process information contained in this report are correct and true as contained in the records of the company and meet purchase order and or specification requirements.

WE CERTIFY THAT HEAT TEST NO.	A104831	DATE	7/11/13
WAS USED TO MAKE PART NO.	9K-295-12016-V1NP	PO NO	4503890281
ACM QUALITY DEPT	Martin Bathurst	QUANTITY	25

QIUBAO VALVE CO.,LTD.

YONGJIA COUNTY,ZHEJIANG,CHINA

MATERIAL CERTIFICATION

A44525 — Certified in accordance to EN10204-3.1 — P.O.:4503584136

CUSTOMER NAME	CAMERON	HEAT TREATMENT	Q、T	RAW MATERIL SUPPLIER	CIXI SPECIAL STEEL	CERT. NO.	2013-0065
SPECIFICATION	ASTM-A350 LF2 Class1 MS-021009-01-01 REV.10	TEMPERATURE	920℃	MELTING PRACTICE	VOD	CERT. DATE	1/0/1900

No.	Forgins logo	Heat No.	Part No.	CHEMICAL COMPOSITION(%)														MECHANICAL PORPERTIES								
				DESC.	C	Mn	Si	S	P	Cr	Ni	Mo	Cu	V	Nb	CE		TENSILE (MPa)	YIELD (MPa)	EL.2" (%)	ROA (%)	HB	AK (J) -46℃			
				Min.	_	0.60	0.15	_	_	_	_	_	_	_	_	_		485	250	22	30	143	Min.16			Avg.20
				Max.	0.21	1.35	0.30	0.030	0.030	0.30	0.40	0.12	0.40	0.05	0.02	0.43		655				197				
1	QB	8417	9K-292-12032-8	10PCS	0.20	0.94	0.21	0.008	0.015	0.04	0.020	0.010	0.070	0.002	0.001	0.37		570	310	57	74	153	90	100	96	95
2																										
3																										
4																										
5																										
6																										
7																										
8																										

Heat Treatment: Temp:920℃ Maintain time: 2.5h Cooling:Water cooled Temp: 630 ℃ Maintain time: 4 h Cooling:Air cooled

WE CERTIFY THAT ALL RESUILTS ARE IN ACCORDANCE TO THE SPECIFICATION AND MEET ASTM-A350 LF2.

After the examination, the test result of nuclear value for the above materials is less than 0.5 u Sv/h.

QUALITY INSPECT *Li weibin*

QUALITY MANAGER: *Zhu lugen*

Add:Dongou Industrial estate Oubei Town Yongjia County of Zhejiang ,China Postalcode:325105 Tel:0086-577-67377188 Fax:0086-577-67377177

Http://www.qiubaovalve.com E-mail:quality_dept@qiubaovalve.com

Cameron Approved
By: laia Date:03/18/13 10:54

QBLO

QIUBAO VALVE CO.,LTD.
ENP INSPECTION REPORT

Customer Name	VALGRO	Production Name	BALL 12"150/900	Report No.	A44525
P.O. NO.	4503584136	Production Material	LF2	Inspection Date	1/5/2013
Draw No.	9K-292F12032	Production Quantity	10PCS	Heat Treatment	400℃/1hour
Part No.	9K-292-12032-8(03)	Carry out Standard	9K-VG-6 REV.03	Batch No.	QB8417

Inspection Process Description

1.Adhesion Test

Adhesion test as per ASTM B571 the sample was bend at 180 degree over a mandrel of Same size as sample. No peeling was observed.

2.Porosity Test

Ferroxyl test carried out as per ASTM B733 9.6.1 standard to check for porosity. None were found.

3.Visual Test

The job was inspected for visual defect like peeling, blistering etc. None were found.

4.Thickness Test

The thickness was measured on coupon and was found to be 0.025-0.031mm with thickness testing machine.

5.Composition Test

The job were plated with E.N.P having average phosphorus content of 10.63% and remaining being nickel.

6.Hardness Test

Hardness after plating average ≥850HV at 100 gm load.

Conclusion	(√)Conformity ( )Non-Conformity		
Inspector	Gao Juhe	Q.A Manager	

QIUBAO VALVE CO.,LTD. 质保部

QP/PR10.12 Rev.A

Cameron Approved
By: laia Date:03/18/13 10:33

METALLURGICA forge s.r.l.
36010 COGOLLO DEL CENGIO (VI) ITALY -
Via M. Schiro, 2 Tel.0445 802222 - Fax 0445 802202

Inspection Certificate

Quality Control Department

N° 8654 / 11 Date 04/11/2011

Purchaser:
CAM SURFACE SYS-EDMONTON
CAMERON CANADA
5003 93RD STREET
T6E5S9 EDMONTON AB - CANADA

Order N°: 4503001377

Our job N°: 112286

Certificate type: EN 10204 ed. MARCH 2005
☐ 2.2. ☑ 3.1. ☐ 3.2

Melting practice
☑ E.F.V.D. ☐ E.F. ☐ AOD ☐ VOD

CHEMICAL ANALISYS STEEL MILL LADLE ANALISYS

MATERIAL: ASTM A 350 LF2 HEAT: 204597 SUPPLIER: ACCIAIERIE VENETE S.p.A.

C	Mn	Si	Ni	Cr	S	P	Al	Cu	Mo	Ti	V	Nb	N	H				
%	%	%	%	%	%	%	%	%	%	%	%	%	%	ppm				
0,176	1,164	0,223	0,118	0,094	0,006	0,011	0,024	0,219	0,023	0,013	0,001	0,001	0,0082	1,6				

C.E. (Long) = 0,416

HEAT TREATMENT

TYPE	TEMP °C	HOUR	COOLING	TYPE	TEMP °C	HOUR	COOLING
NORMALIZED	910	8	AIR				

MECHANICAL TESTS

FROM PIECE ☐
FROM QTC ☑
Treat. with Pc

REQUIRED	UTS Mpa	YS 0,2 Mpa	YS Mpa	EL %	RA %	IMPACT TEST Dir.	Type	Temp °C	Avr/Min	J	HB Min/Max on pcs	
MIN	485	250		22	30	L	KV	-46	20	16	143	197
MAX	655											

OBTAINED

N° TEST	DIM mm	SECT. mm	LENGHT mm	TEMP °C	DIR	UTS Mpa	YS 0,2 Mpa	YS Mpa	EL %	RA %	IMPACT TEST Dir.	Type	Temp °C	JOULE			HB Min/Max on pcs	
2617B	12,50	122,65	50,00	+20	L	500	323		37,8	70,4	L	KV	-46	65	79	71	148	152

OUR ITEM	YOUR ITEM	DESCRIPTION	DRAWING		QUANTITY
4	from 000 to 000 from 04 to 04	CLOSURE-FE FORGING 12"150 578x305x140 F	RS-11-V-1532043	RS-11-V-1532043	8

REMARKS

MONITORING TEMPERATURE BY CONTACT THERMOCOUPLES ACCORDING TO METHOD A ACCORDING TO SPEC. MS-021000-01 REV. 05.
PIECES CONFORMING TO DIMENSIONAL AND VISUAL CONTROL.
HEAT TREATMENT FURNACE IS CALIBRATED ACCORDING TO API 6A 19° ED. ANNEX P. HBN OBTAINED ON Q.T.C.: 150.
MATERIAL ACCORDING TO SPEC. MS-021009 REV. 12 DASH 01-01 REV. 09.
SAMPLING MECHANICAL TEST AT 1/4 T FROM Q.T.C. SIZE: 5"x5". MATERIAL SUPPLIED IS FREE FROM RADIOACTIVE CONTAMINATION.

Material conforming ☑
Material non conforming ☐

Surveyor:

Inspection Office:

APPROVED
By laia at 4:22 pm, 1/20/12

MTS FORGE
P. O. Box 309
Sadsburyville, PA 19369
Phone: 610-857-3500 Fax: 610-857-3502
Website: www.mtsforge.com

MATERIAL TEST REPORT W/O NUMBER 4187 **DATE:** 8/11/2011

PURCHASER CAMERON CANADA

PURCHASE ORDER NUMBER: 4502925505 **P/N** 9K-RS-11-V-153

ITEM	QTY	PRODUCT DESCRIPTION	SPECIFICATION	HEAT CODE	MTS W/O #
1	1	CLOSURE FE FORGING *NO WELD REPAIR PERMITTED ON THIS ORDER*	A350 LF2 MS-021009-01-01	B169N	4187

HEAT CODE: B169N **HEAT TREATMENT: NORMALIZED**

C	Mn	P	S	Si	Cr	Ni	Mo	Cu	V	Cb	Ce
0.18	1.23	0.011	0.007	0.21	0.09	0.07	0.02	0.20	0.02	0.004	0.43

Tensile	Yield	Elong % (In 4D)	R.A. %	BHN	Impact	Lat Exp	% Shear
76,500	46,000	32 %	73 %	156	129 119 113 Avg. F.L. Lb 120	.077 .074 .072	70 50 50

Normalize Cycle:
1600°F ± 25°F equalized/air cooled.

Impact Testing was performed at -50°F. Full Size 10mm x 10mm in the longitudinal direction

WE HEREBY CERTIFY THE ABOVE RESULTS TO BE CORRECT AS CONTAINED IN THE RECORDS OF THE COMPANY.

MTS QC REVIEW
Approved
Date

Certified in accordance to EN10204-3.1

APPROVED
By laia at 4:20 pm, 8/15/11

Edward L. Waddell
Quality Control Manager

VALVES & MEASUREMENT
Cameron Canada Corporation
3707 – 97 Street
Edmonton Alberta Canada T6E 6J2
Phone 780.463.6868
Fax 780.465.1244
www.c-a-m.com

LETTER OF COMPLIANCE

for:

GROVE BRAND TRUNNION VALVES

Model B4, B5 - Sour Low Temperature Service

Cameron Valves & Measurement hereby certifies that the design, manufacture, sampling, testing and quality control inspection of the GROVE brand CSA Z245.15 ball valves for Sour Low Temperature Service meet the requirements of CSA Z245.15-09 Sour Service, V&M Engineering Standards, and customer purchase order requirements. As part of compliance to these specifications, the valves are marked in accordance with MSS SP-25. The valves are also marked "SOUR" as required by CSA Z245.15 marking requirements for Sour Service and are suitable for use in CSA Z662 Pipeline systems.

The materials of construction for these valves conform to the metallurgical requirements of NACE MR0175/ISO 15156:2003 (Parts 1 & 2 for Carbon & Alloy Steels in SSC Region 3 Sour Service and Parts 1 & 3 for CRA's as specified in CSA Z245.15 Chapter 13). According to NACE MR0175-2003/ISO 15156, it is the customer's / user's responsibility to ensure that the valve materials will be satisfactory in the intended service.

The minimum service temperature of these valves is -46°C/-50°F. Impact testing has been performed in accordance with applicable ASTM requirements and those of CSA Z245.15 for Category II M45C Service.

The ASTM A320 Grade L7M studs and capscrews and ASTM Grade A194 7ML nuts used in the products specified above have been Quality Control inspected and meet the requirements of the applicable ASTM specifications – as is already implied fully by the statements above regarding both CSA and NACE standards compliance.

Approved by: _____
Greg Ogaranko, M.Eng. P. Eng.
Engineering Manager

03/25/11
EWR10619-01 Rev03.docx

CAMERON
VALVES & MEASUREMENT

VALVE PRESSURE TEST FORM

PRODUCT/WORK ORDER INFORMATION

PART #: 9K-5012 F01F018 DESCRIPTION: 12 150 135 FXF w/60 SERIAL NUMBER(S): 2858472-1

PRODUCTION ORDER #: 1128584172 TEST SPECIFICATION: 5A-M1-22

CUSTOMER P/O / CAMERON S/O:

SHELL TEST					
Test Medium	**Pressure (psig)**	**Duration (Min)**	**Shell Test**		
Hydrostatic	4450	15	☑ Pass	☐ Fail	
Nitrogen Gas			☐ Pass	☐ Fail	
Gage Serial Number		Calibration Due Date		Gage Pressure Range	
C057		4/28/2014		10000 psi	

SEAT TEST							DOUBLE BLOCK & BLEED TEST N/A ☐	
Test Medium	**Pressure (psig)**	**Duration (Min)**	**Side A Left Seat**		**Side B Right Seat**		**Double Block and Bleed Seat**	
Hydrostatic	350	5	☑ Pass	☐ Fail	☑ Pass	☐ Fail	☐ Pass	☐ Fail
Nitrogen Gas			☐ Pass	☐ Fail	☐ Pass	☐ Fail	☐ Pass	☐ Fail
Air			☐ Pass	☐ Fail	☐ Pass	☐ Fail		
Gage Serial Number		Calibration Due Date			Gage Pressure Range			
C057		4/28/2014			10000 psi			
Body Bleed Closed	☐ Yes	Charts Required?			☐ Yes ☐ No	Differential?		☐ N/A

Comments/Special Customer Requests:

The above specified requirements have been quality inspected and accepted

Please Print

Tested by Lloyd Date Aug 23 Serial# 1

Tested by Date Serial#

Reviewed & Approved CCV Date 08/26/13

Tested by Date Serial#

Customer Rep Date

Certificate of Conformance

Certificate #: P4-134247

Plant 4 Velan Inc.
1010 Cowie Street
Granby, Quebec
Canada, J2J 1E7
Phone : 450-378-2305
Fax : 450-378-6865

Customer Name :	MRC CANADA ULC.
Customer Po # :	S759228504
Velan Order # :	M014-870643-W
Valve Design :	B16.34
Hydro Test Spec :	MSS-SP61/B16.34
Test Result :	ACCEPTABLE

Certificate Date :	16-SEP-2013		
Item Number :	55	Position No :	125
Quantity :	2		
Figure Number :	W07-2074B-02TY		
Description :	VALVE 1 1/2" 800 GLOBE BB		
Draw No. & Rev :		REV	

Tag Number(s) : NONE

NOTES : CERTIFIED MATERIAL TEST RESULTS AS BELOW:
MATERIAL TEST RESULTS SHOWN BELOW:

CHEMICALS

ASTM Code: A105-11--

Heat Code	Desc	(C)	(Mn)	(P)	(S)	(Si)	(Cu)	(Ni)	(Cr)	(Mo)	(V)
MMFKU2	BONNET	0.200	0.960	0.014	0.020	0.220	0.019	0.016	0.120	0.002	0.002

Heat Treatment
NORMALIZED

Heat Code	Desc	(C)	(Mn)	(P)	(S)	(Si)	(Cu)	(Ni)	(Cr)	(Mo)	(V)
MMHPC1	BODY	0.190	0.940	0.015	0.019	0.250	0.034	0.027	0.120	0.005	0.003

Heat Treatment
NORMALIZED

MECHANICALS [F/B: flatenning/ bending; GS: Grain size]

Tensile (MPa / ksi)	Yield (MPa / ksi)	Elongation (%)	Reduction of Area(%)	Hardness (HB)
518.0 / 75.1	357.0 / 51.8	35.0	65.3	152.0 / 159.0
Impact Energy (J)	Temperature (°C)	Impact Energy (ft-lb)	Temperature (°F)	F/B GS
/ /		/ /		

Tensile (MPa / ksi)	Yield (MPa / ksi)	Elongation (%)	Reduction of Area(%)	Hardness (HB)
523.0 / 75.9	361.0 / 52.4	35.4	63.6	159.0 / 163.0
Impact Energy (J)	Temperature (°C)	Impact Energy (ft-lb)	Temperature (°F)	F/B GS
/ /		/ /		

Velan hereby certifies that the valve(s) described above is (are) in conformance with the purchase order and specification requirements. The test report represents the actual attributes of items furnished and all test results are in full conformance with applicable specification and purchase order requirements.

for

Manager of Q.C. Documentation

16-SEP_2013

Date

Customer Representative

Date

Certificate of Conformance

Certificate #: P4-133676

Plant 4 Velan Inc.
1010 Cowie Street
Granby, Quebec
Canada, J2J 1E7
Phone : 450-378-2305
Fax : 450-378-6865

Customer Name :	MRC CANADA ULC.
Customer Po # :	S759225007
Velan Order # :	M014-870277-W
Valve Design :	B16.34
Hydro Test Spec :	MSS-SP61/B16.34
Test Result :	ACCEPTABLE

Certificate Date :	21-AUG-2013		
Item Number :	52	Position No :	240
Quantity :	7		
Figure Number :	F08-0074C-02TY-W320		
Description :	VALVE 2" 150 GLOBE RF		
Draw No. & Rev :		REV	

Tag Number(s) : NONE

NOTES : ALL TESTS AND EXAMINATIONS MEET EN 10204-3.1/ ISO 10474-3.1
MATERIAL TEST RESULTS SHOWN BELOW:

CHEMICALS

ASTM Code: A216-08-WCB-

Heat Code	Desc	(C)	(Mn)	(P)	(S)	(Si)	(Cu)	(Ni)	(Cr)	(Mo)	(V)
BNC04M17	BONNET	0.190	0.901	0.024	0.007	0.475	0.028	0.027	0.051	0.004	0.005
Heat Treatment											
NORMALIZED											

Heat Code	Desc	(C)	(Mn)	(P)	(S)	(Si)	(Cu)	(Ni)	(Cr)	(Mo)	(V)
BNC07M26	BONNET	0.189	0.955	0.024	0.009	0.471	0.034	0.025	0.042	0.005	0.007
Heat Treatment											
NORMALIZED											

Heat Code	Desc	(C)	(Mn)	(P)	(S)	(Si)	(Cu)	(Ni)	(Cr)	(Mo)	(V)
BNC11M15	BONNET	0.190	0.956	0.033	0.009	0.490	0.035	0.070	0.041	0.005	0.007
Heat Treatment											
NORMALIZED											

Heat Code	Desc	(C)	(Mn)	(P)	(S)	(Si)	(Cu)	(Ni)	(Cr)	(Mo)	(V)
BNC16C28	BODY	0.201	0.969	0.031	0.014	0.497	0.024	0.027	0.036	0.004	0.006
Heat Treatment											
NORMALIZED											

Heat Code	Desc	(C)	(Mn)	(P)	(S)	(Si)	(Cu)	(Ni)	(Cr)	(Mo)	(V)
BND16A27	BONNET	0.192	0.879	0.031	0.011	0.450	0.035	0.027	0.052	0.011	0.006
Heat Treatment											
NORMALIZED											

Heat Code	Desc	(C)	(Mn)	(P)	(S)	(Si)	(Cu)	(Ni)	(Cr)	(Mo)	(V)
BND17C28	BODY	0.189	0.868	0.029	0.009	0.398	0.034	0.038	0.040	0.005	0.007
Heat Treatment											
NORMALIZED											

Heat Code	Desc	(C)	(Mn)	(P)	(S)	(Si)	(Cu)	(Ni)	(Cr)	(Mo)	(V)
BND28D15	BODY	0.201	0.924	0.033	0.009	0.441	0.040	0.035	0.067	0.012	0.008
Heat Treatment											
NORMALIZED											

MECHANICALS [F/B: flatenning/ bending; GS: Grain size]

Tensile (MPa / ksi)	Yield (MPa / ksi)	Elongation (%)	Reduction of Area(%)	Hardness (HB)
526.0 / 76.3	326.0 / 47.3	29.2	59.0	/
Impact Energy (J)	**Temperature (°C)**	**Impact Energy (ft-lb)**	**Temperature (°F)**	**F/B GS**
/ /		/ /		

Tensile (MPa / ksi)	Yield (MPa / ksi)	Elongation (%)	Reduction of Area(%)	Hardness (HB)
546.0 / 79.2	346.0 / 50.2	30.2	59.0	/
Impact Energy (J)	**Temperature (°C)**	**Impact Energy (ft-lb)**	**Temperature (°F)**	**F/B GS**
/ /		/ /		

Tensile (MPa / ksi)	Yield (MPa / ksi)	Elongation (%)	Reduction of Area(%)	Hardness (HB)
563.0 / 81.7	359.0 / 52.1	25.2	58.0	/
Impact Energy (J)	**Temperature (°C)**	**Impact Energy (ft-lb)**	**Temperature (°F)**	**F/B GS**
/ /		/ /		

Tensile (MPa / ksi)	Yield (MPa / ksi)	Elongation (%)	Reduction of Area(%)	Hardness (HB)
538.0 / 78.0	338.0 / 49.0	26.2	58.0	/
Impact Energy (J)	**Temperature (°C)**	**Impact Energy (ft-lb)**	**Temperature (°F)**	**F/B GS**
/ /		/ /		

Tensile (MPa / ksi)	Yield (MPa / ksi)	Elongation (%)	Reduction of Area(%)	Hardness (HB)
558.0 / 80.9	359.0 / 52.1	28.6	57.0	/
Impact Energy (J)	**Temperature (°C)**	**Impact Energy (ft-lb)**	**Temperature (°F)**	**F/B GS**
/ /		/ /		

Tensile (MPa / ksi)	Yield (MPa / ksi)	Elongation (%)	Reduction of Area(%)	Hardness (HB)
563.0 / 81.7	350.0 / 50.8	32.2	61.1	/
Impact Energy (J)	**Temperature (°C)**	**Impact Energy (ft-lb)**	**Temperature (°F)**	**F/B GS**
/ /		/ /		

Tensile (MPa / ksi)	Yield (MPa / ksi)	Elongation (%)	Reduction of Area(%)	Hardness (HB)
596.0 / 86.4	383.0 / 55.5	33.8	58.0	/
Impact Energy (J)	**Temperature (°C)**	**Impact Energy (ft-lb)**	**Temperature (°F)**	**F/B GS**
/ /		/ /		

VELAN

Certificate of Conformance

Certificate #: P4-133676

Heat Code	Desc	(C)	(Mn)	(P)	(S)	(Si)	(Cu)	(Ni)	(Cr)	(Mo)	(V)
BND29D15	BODY	0.184	0.913	0.026	0.007	0.405	0.029	0.021	0.043	0.006	0.010

Heat Treatment
NORMALIZED

Tensile (MPa / ksi)	Yield (MPa / ksi)	Elongation (%)	Reduction of Area(%)	Hardness (HB)
568.0 / 82.4	367.0 / 53.2	36.4	57.0	/
Impact Energy (J)	**Temperature (°C)**	**Impact Energy (ft-lb)**	**Temperature (°F)**	**F/B GS**
/ /		/ /		

Velan hereby certifies that the valve(s) described above is (are) in conformance with the purchase order and specification requirements. The test report represents the actual attributes of items furnished and all test results are in full conformance with applicable specification and purchase order requirements.

for

Manager of Q.C. Documentation

21-AUG_2013

Date

Customer Representative

Date

Certificate of Conformance

Certificate #: P4-133631

Plant 4 Velan Inc.
1010 Cowie Street
Granby, Quebec
Canada, J2J 1E7
Phone : 450-378-2305
Fax : 450-378-6865

Customer Name :	MRC CANADA ULC.
Customer Po # :	S759225013
Velan Order # :	M014-870278-W
Valve Design :	API-602
Hydro Test Spec :	API-602
Test Result :	ACCEPTABLE

Certificate Date :	20-AUG-2013		
Item Number :	11	Position No :	35
Quantity :	12		
Figure Number :	W07-2054B-02TY		
Description :	VALVE 1 1/2" 800 GATE BB		
Draw No. & Rev :		REV	

NOTES : ALL TESTS AND EXAMINATIONS MEET EN 10204-3.1/ ISO 10474-3.1

Tag Number(s) : NONE

MATERIAL TEST RESULTS SHOWN BELOW:

CHEMICALS

MECHANICALS [F/B: flatenning/ bending; GS: Grain size]

ASTM Code: A105-09--

Heat Code	Desc	(C)	(Mn)	(P)	(S)	(Si)	(Cu)	(Ni)	(Cr)	(Mo)	(V)
MMCJL2	BONNET	0.210	0.910	0.017	0.020	0.180	0.003	0.007	0.012	0.005	0.002

Heat Treatment
NORMALIZED

Tensile (MPa / ksi)	Yield (MPa / ksi)	Elongation (%)	Reduction of Area(%)	Hardness (HB)
520.0 / 75.4	352.0 / 51.1	35.1	64.8	159.0 / 167.0
Impact Energy (J)	**Temperature (°C)**	**Impact Energy (ft-lb)**	**Temperature (°F)**	**F/B GS**
/ /		/ /		

Heat Code	Desc	(C)	(Mn)	(P)	(S)	(Si)	(Cu)	(Ni)	(Cr)	(Mo)	(V)
MMCPL4	BONNET	0.210	1.000	0.032	0.015	0.240	0.004	0.005	0.006	0.005	0.002

Heat Treatment
NORMALIZED

Tensile (MPa / ksi)	Yield (MPa / ksi)	Elongation (%)	Reduction of Area(%)	Hardness (HB)
516.0 / 74.8	355.0 / 51.5	35.0	64.2	152.0 / 167.0
Impact Energy (J)	**Temperature (°C)**	**Impact Energy (ft-lb)**	**Temperature (°F)**	**F/B GS**
/ /		/ /		

ASTM Code: A105-11--

Heat Code	Desc	(C)	(Mn)	(P)	(S)	(Si)	(Cu)	(Ni)	(Cr)	(Mo)	(V)
MMEWM7	BONNET	0.180	0.960	0.017	0.018	0.230	0.010	0.014	0.120	0.002	0.001

Heat Treatment
NORMALIZED

Tensile (MPa / ksi)	Yield (MPa / ksi)	Elongation (%)	Reduction of Area(%)	Hardness (HB)
523.0 / 75.9	358.0 / 51.9	34.8	63.6	156.0 / 167.0
Impact Energy (J)	**Temperature (°C)**	**Impact Energy (ft-lb)**	**Temperature (°F)**	**F/B GS**
/ /		/ /		

Heat Code	Desc	(C)	(Mn)	(P)	(S)	(Si)	(Cu)	(Ni)	(Cr)	(Mo)	(V)
MMFCX2	BONNET	0.200	0.930	0.004	0.022	0.220	0.012	0.016	0.120	0.003	0.001

Heat Treatment
NORMALIZED

Tensile (MPa / ksi)	Yield (MPa / ksi)	Elongation (%)	Reduction of Area(%)	Hardness (HB)
520.0 / 75.4	355.0 / 51.5	34.6	64.8	156.0 / 167.0
Impact Energy (J)	**Temperature (°C)**	**Impact Energy (ft-lb)**	**Temperature (°F)**	**F/B GS**
/ /		/ /		

Heat Code	Desc	(C)	(Mn)	(P)	(S)	(Si)	(Cu)	(Ni)	(Cr)	(Mo)	(V)
MMFOU5	BONNET	0.190	0.970	0.019	0.020	0.240	0.013	0.031	0.130	0.003	0.002

Heat Treatment
NORMALIZED

Tensile (MPa / ksi)	Yield (MPa / ksi)	Elongation (%)	Reduction of Area(%)	Hardness (HB)
518.0 / 75.1	357.0 / 51.8	35.7	63.8	152.0 / 159.0
Impact Energy (J)	**Temperature (°C)**	**Impact Energy (ft-lb)**	**Temperature (°F)**	**F/B GS**
/ /		/ /		

Heat Code	Desc	(C)	(Mn)	(P)	(S)	(Si)	(Cu)	(Ni)	(Cr)	(Mo)	(V)
MMHPC1	BODY	0.190	0.940	0.015	0.019	0.250	0.034	0.027	0.120	0.005	0.003

Heat Treatment
NORMALIZED

Tensile (MPa / ksi)	Yield (MPa / ksi)	Elongation (%)	Reduction of Area(%)	Hardness (HB)
523.0 / 75.9	361.0 / 52.4	35.4	63.6	159.0 / 163.0
Impact Energy (J)	**Temperature (°C)**	**Impact Energy (ft-lb)**	**Temperature (°F)**	**F/B GS**
/ /		/ /		

VELAN

Certificate of Conformance

Certificate #: P4-133631

Velan hereby certifies that the valve(s) described above is (are) in conformance with the purchase order and specification requirements. The test report represents the actual attributes of items furnished and all test results are in full conformance with applicable specification and purchase order requirements.

Gilles Delafontaine for — 20-AUG_2013

Velan — Date — Customer Representative — Date

CAMERON

VALVES & MEASUREMENT

Thursday, 11-Apr-2013

From:

Cameron Canada Corporation
3707 97 St.
Edmonton, Alberta, Canada
T6E6J2
Phone : 780-468-2732
Web Site : www.c-a-m.com

To:

Subject:

Serial	2744032	Quantity/Series	-01

Comments:

Part #: 9K-5012F01FO1A

Description: 12" 150 B5 FXF NACE W/G.O.

Sales Order: n/a

Customer PO: n/a

5 Blue Process Equipment Inc. SEP 30 2013 Quality Department

MTRs produced using MetalTrace®. Visit www.TraceApps.com or call toll-free 1-866-429-7007 for more information.

CAMERON

VALVES & MEASUREMENT

Thursday, 11-Apr-2013

From:

Cameron Canada Corporation
3707 97 St.
Edmonton, Alberta, Canada
T6E6J2
Phone : 780-468-2732
Web Site : www.c-a-m.com

To:

Document Summary Page

The documents are printed in the following order:

#	Heat #	Heat Code	Job/Serial #	Material #	Description
1	GROVE		2744032	9K-5012F01FO1A	Grove B4, B5 Sour Low Temp.
2	8417	QB	2744032	9K-5012F01FO1A	BALL A350 LF2 ENC 12 150/900 B5/D2
3	XY-0061		2744032	9K-5012F01FO1A	GLAND PLATE, 12" 150/900 B5
4	A104178		2744032	9K-5012F01FO1A	(NP) STEM, GROVE B5, 12 150/600,4140 MAT'L SUITS 1 MIL ENC
5	209755		2744032	9K-5012F01FO1A	BODY FORGING 12 150/900 B5
6	412029		2744032	9K-5012F01FO1A	CLOS-FE FORGING CONTOURED 12 150 B5

MTRs produced using MetalTrace®. Visit www.TraceApps.com or call toll-free 1-866-429-7007 for more information.

VALVES & MEASUREMENT
Cameron Canada Corporation
3707 – 97 Street
Edmonton Alberta Canada T6E 6J2
Phone 780.463.6868
Fax 780.465.1244
www.c-a-m.com

LETTER OF COMPLIANCE

for:

GROVE BRAND TRUNNION VALVES

Model B4, B5 - Sour Low Temperature Service

Cameron Valves & Measurement hereby certifies that the design, manufacture, sampling, testing and quality control inspection of the GROVE brand CSA Z245.15 ball valves for Sour Low Temperature Service meet the requirements of CSA Z245.15-09 Sour Service, V&M Engineering Standards, and customer purchase order requirements. As part of compliance to these specifications, the valves are marked in accordance with MSS SP-25. The valves are also marked "SOUR" as required by CSA Z245.15 marking requirements for Sour Service and are suitable for use in CSA Z662 Pipeline systems.

The materials of construction for these valves conform to the metallurgical requirements of NACE MR0175/ISO 15156:2003 (Parts 1 & 2 for Carbon & Alloy Steels in SSC Region 3 Sour Service and Parts 1 & 3 for CRA's as specified in CSA Z245.15 Chapter 13). According to NACE MR0175-2003/ISO 15156, it is the customer's / user's responsibility to ensure that the valve materials will be satisfactory in the intended service.

The minimum service temperature of these valves is -46°C/-50°F. Impact testing has been performed in accordance with applicable ASTM requirements and those of CSA Z245.15 for Category II M45C Service.

The ASTM A320 Grade L7M studs and capscrews and ASTM Grade A194 7ML nuts used in the products specified above have been Quality Control inspected and meet the requirements of the applicable ASTM specifications – as is already implied fully by the statements above regarding both CSA and NACE standards compliance.

Approved by: _____
Greg Ogaranko, M.Eng. P. Eng.
Engineering Manager

03/25/11
EWR10619-01 Rev03.docx

QIUBAO VALVE CO.,LTD.

YONGJIA COUNTY,ZHEJIANG,CHINA

MATERIAL CERTIFICATION

A44525 — Certified in accordance to EN10204-3.1 — P.O.:4503584136

CUSTOMER NAME	CAMERON	HEAT TREATMENT	Q、T	RAW MATERIL SUPPLIER	CIXI SPECIAL STEEL	CERT. NO.	2013-0065
SPECIFICATION	ASTM-A350 LF2 Class1 MS-021009-01-01 REV.10	TEMPERATURE	920℃	MELTING PRACTICE	VOD	CERT. DATE	1/0/1900

No.	Forgins logo	Heat No.	Part No.	CHEMICAL COMPOSITION(%)													MECHANICAL PORPERTIES								
				DESC.	C	Mn	Si	S	P	Cr	Ni	Mo	Cu	V	Nb	CE	TENSILE (MPa)	YIELD (MPa)	EL.2" (%)	ROA (%)	HB	AK (J) -46℃			
				Min.	_	0.60	0.15	_	_	_	_	_	_	_	_	_	485	250	22	30	143	Min.16			Avg.20
				Max.	0.21	1.35	0.30	0.030	0.030	0.30	0.40	0.12	0.40	0.05	0.02	0.43	655				197				
1	QB	8417	9K-292-12032-8	10PCS	0.20	0.94	0.21	0.008	0.015	0.04	0.020	0.010	0.070	0.002	0.001	0.37	570	310	57	74	153	90	100	96	95
2																									
3																									
4																									
5																									
6																									
7																									
8																									

Heat Treatment: Temp:920℃ Maintain time: 2.5h Cooling:Water cooled Temp: 630 ℃ Maintain time: 4 h Cooling:Air cooled

WE CERTIFY THAT ALL RESUILTS ARE IN ACCORDANCE TO THE SPECIFICATION AND MEET ASTM-A350 LF2.
After the examination, the test result of nuclear value for the above materials is less than 0.3 u Sv/h.

QUALITY INSPECT *Li weibin* QUALITY MANAGER: *Zhu lugen*

Add:Dongou Industrial estate Oubei Town Yongjia County of Zhejiang ,China Postalcode:325105 Tel:0086-577-67377188 Fax:0086-577-67377177
Http://www.qiubaovalve.com E-mail:quality_dept@qiubaovalve.com

Cameron Approved
By: laia Date:03/18/13 10:54

SUZHOU DONGWU FORGING AND WELDING PLANT

MATERIAL CERTIFICATION

Ref. PO#77185

Conforms to DIN 50049.3.1 & BS EN 10204.3.1

QTY: 52pcs

CUSTOMER NAME	ACM Machining, Inc	Melting Practice	HEAT	QUENCHED	QUENCHED	TEMPERED	CERT. NO.	ACM-185
SPECIFICATION	ASTM A350 LF2 CLASS 1	EF+VD	TREATMENT	900°C	IN WATER	620°C	CERT.DATE	Oct 20,2011

Item No.	Forging Logo.	Heat No.	QTY	Part No.	Desc.	Chemical Composition (%)												Mechanical Properties							
						C	Mn	Si	S	P	Cr*	Mo*	Ni*	Cu*	V*	Nb*	CE	Yield (MPa)	Tensile (MPa)	EL2" (%)	Roa (%)	HB	Impact (J @-46°C)		
					Min.		0.60	0.15										300	485	22	30		27(A)/22(S)		
					Max.	0.23	1.35	0.30	0.035	0.035	0.3	0.12	0.4	0.4	0.05	0.02	0.43		655			197			
1	XY	XY-0061	27	BAR-6.750-00700	6.750"Round Bar	0.20	0.92	0.26	0.003	0.019	0.02	0.0006	0.01	0.03	0.0034		0.36	375	556	33	76	158	104	86	128
2	XY	XY-0061	25	BAR-7.000-00700	7.000"Round Bar	0.20	0.92	0.26	0.003	0.019	0.02	0.0006	0.01	0.03	0.0034		0.36	375	556	33	76	158	104	86	128

VISUAL INSPECTION:PASSED
Charpy Speciman Size: 10MMX10MMX55MM
CVN Orientation: Longitudinal

QUALITY INSPECTOR: Dong Cong QUALITY MANAGER: Wu Lin

Part No. 30092
Lot No. 6550

Cameron Approved
By: laia Date:03/13/13 9:01

ACM Machining Inc. hereby certify that all test results and process information contained in this report are correct and true as contained in the records of the company and meet purchase order and or specification requirements.

ACM QUALITY DEPT	WE CERTIFY THAT HEAT TEST NO.	XY-0061	DATE	3-8-13
	WAS USED TO MAKE PART NO.	9K-293-12060-V1	PO NO	4503731263
			QUANTITY	5

TC Industries Test Center
3703 South Route 31
Crystal Lake, IL 60012-1412
Telephone 815/459/2400 Fax 815/459/3419

ACCREDITED
Testing Cert #1281-01

TEST REPORT

REPORT NO: 150689
DATE: DECEMBER 1, 2010

TO: SUNBELT STEEL CO - TURRET
527 ATANDO AVENUE
ATTN: RHONDA
CHARLOTTE, NC 28206

SHIP TO: SUNBELT STEEL CO - TURRET
527 ATANDO AVENUE
ATTN: RHONDA
CHARLOTTE, NC 28206

DESC: 40 PCS 4.5"RD X 20' PO: 64874C	HEAT#: A104178 MO: 77169-1	GRADE: 4140H CO: 30568-4	WT: 44181 LOT: 70066
SPEC: QUENCH,TEMPER,STRESS RELIEVE COOPER CAMERON SPEC.MS-012502, 197/237 HBW @ SURF/100T/75Y	CVN 15FT/LBS@-50F/REPORT MECH. 01-03 PER CAMERON REV 2/EL18%		
PROCESS: FURN TEMP : 1650 TEMPER TEMP: 1275 STRESS TEMP: 1200	FURN TIME hh.mm: 0.55 TEMPER TIME hh.mm: 4.50 STRESS TIME hh.mm: 4.50	QUENCH: OIL	

PARAMETER	UNITS	LIMITS		TEST RESULTS			*(See sampling plan on back)*
TENSILE	KSI	100	N/A	109.0	107.0		
YIELD .2%	KSI	75	N/A	81.0	80.0		
ELONG 2"	%	18	N/A	24.0	25.0		
RED AREA	%	35	N/A	65.0	66.0		
CHARPY	FT-LB	15	N/A	45	40	39	
CVN TEMP	F	-50	-50	-50			
SURFACE HB	HBW	197	237	231			

TC INDUSTRIES AND SUBCONTRACTED LABS (A2LA ACCREDITED)

Tensile,Standard	TC	Rockwell	Micro Analysis*
Tensile,Full Size		Brinell TC	Decarb Measure
Charpy V 10mmX10mm	MSI	Ultra Sonic*	Chemistry*
Microhardness,Knoop*			

TC:TC Test Center	BE:Berg Eng.	EX:Exova	MSI:Metallurgical Ser.
Cert #1281.01	Cert #L1157-1	Cert #104.02	Cert #0510.01
2/28/11	2/4/11	6/30/12	12/31/10

Time 03:49

**not included in our scope of accreditation*

Ken Rueff
Test Center Supervisor

FC 4.12.16F 7/15/10

There are no deviations from test methods unless noted. It should not be assumed that mechanical properties of raw material heat treated to a fastener standard will have the same properties of a finished fastener whose original material characteristics may have been significantly altered.

No mercury was used/added and no welding/weld repair was performed on this material while in the possession of TC Industries, Inc.

This original test report displays a raised "TC Industries Test Center" seal. This test report relates only to the items tested and shall not be reproduced, except in full, without the written permission of TC Industries Test Center

Cameron Approved
By: lala Date:02/15/13 8:21

ACM Machining Inc. hereby certify that all test results and process information contained in this report are correct and true as contained in the records of the company and meet purchase order and or specification requirements.

WE CERTIFY THAT HEAT TEST NO.	A104178	DATE	2-15-13
WAS USED TO MAKE PART NO.	9K-295-12016-V1NP	PO NO	4503674757
ACM QUALITY DEPT	Heath Ballard	QUANTITY	75

Steel Dynamics, Inc.
Engineered Bar Products Division

8000 N. County Road 225 East
Pittsboro, IN 46167
Phone: (317) 892-7000
Fax: (317) 892-7285

Certified Material Test Report

Cert # : 97295 | Mill Order : 1011505 | Heat # : A104178 | Issued : 7/18/2011 13:36:56
Work Order : 98814 | Sales Order : 77169-1 | Customer : Turret Steel Industries | PO # : 30568-4
Load # : 118039 | Reference # : | Reference Desc : | End Use :
Size : 4-1/2" | Shape : Round | Grade : 4140H | Length : 20'00"
Grain Practice : Al Fine Grain (5-8) per ASTM A29 | Reduction Ratio : 9.0 to 1 | Disposition : 1

Ladle Chemistry Analysis (ASTM A29)

C	Mn	P	S	Si	Al	Cu	Ni	Cr	Mo	Sn	N	V	Cb	B	Ca	W	Ti	Dl
0.42	0.89	0.006	0.022	0.25	0.026	0.26	0.10	0.92	0.17	0.011	0.0085	0.004	0.002	0.0000	0.0009	0.000	0.001	5.16

Pb	Co	As	Sb	Zr	Bi	H	O	Ceq	J-Factor
0.000	0.008	0.006	0.002	0.001	0.001	1.5		0.81	

Product Check Analysis (ASTM A29)

	C	Mn	P	S	Si	Al	Cu	Ni	Cr	Mo	Sn	N	V	Cb	Ti	B	Ca	O
Front																		
Back																		

Jominy (ASTM A255)

	J1	J2	J3	J4	J5	J6	J7	J8	J9	J10	J12	J14	J16	J18	J20	J24	J28	J32
Calc'd	57	57	57	57	57	57	57	55	53	52	49	48	45	44	43	42	40	37
Front																		
Back																		

Microcleanliness (ASTM E45)

Method A								Method C		Method E	
AT	AH	BT	BH	CT	CH	DT	DH	S	O	SAM "B"	SAM "D"

Microcleanliness (DIN 50602)

K			M
S	O	Tot	Tot

Decarb

Depth	% of Diameter

Grainsize

Austenitic	Ferritic
6	

Macrostructure (ASTM E381)

S	R	C
1	1	2

Magnetic Particle Inspection

Frequency	Severity

Mechanical Properties (ASTM A370)

Tensile Properties					Hardness	
Tensile Strength	0.2% Yield Strength	% Elong (2")	% ROA	0.35% EUL Yield Strength	(MR)	(Surf)

Steel Dynamics - Engineered Bar Products has a quality system in place which has been certified ISO 9001:2008 compliant, including PED certification

Comments/Specs

ASTM A322 (latest rev.) ----- ASTM A304 (latest rev.) ----- Electric Arc Furnace Melted - Vacuum Tank Degassed ----- EN 10204:2004 3.1 ----- Turret Steel Spec TSI-130

Part No. 60209
Lot No. 5664

Cameron Approved
By: laia Date:02/15/13 8:21

Condition : As-Rolled, Hot-Rolled

I hereby certify that the content of this report is correct and accurate, and that all tests and operations performed on this material were in compliance with applicable material specifications and purchaser designated requirements.

Dylan Kale
Dylan Kale - Rolling Mill Metallurgist

Any alteration to this report voids Steel Dynamic's warranting of results. No weld repair has been performed on this material. This material is not radioactive and has not been exposed to radioactivity while under the control of Steel Dynamics. This material has not been exposed to mercury while under the control of Steel Dynamics. Unless otherwise noted, this material was melted, continually cast, and rolled in the USA; w/ all testing performed by Steel Dynamics.

Steel Dynamics Rev Level 1 [108] - 241

retrieve_cn

ACM Machining Inc. hereby certify that all test results and process information contained in this report are correct and true as contained in the records of the company and meet purchase order and or specification requirements.

WE CERTIFY THAT HEAT TEST NO.	A104178	DATE	2-15-13
WAS USED TO MAKE PART NO.	9K-295-12016-V1NP	PO NO	4503674757
ACM QUALITY DEPT	Heidi Bethard	QUANTITY	75

METALLURGICA sider-forge s.r.l.

36010 COGOLLO DEL CENGIO (VI) ITALY - Via M. Schiro, 2 Tel.0445 802222 - Fax 0445 802202

Inspection Certificate

Quality Control Department

N° 2476 / 12 Date 17/05/2012

Purchaser:
CAM SURFACE SYS-EDMONTON
CAMERON CANADA
5003 93RD STREET
T6E5S9 EDMONTON AB - CANADA

Order N°: 4503248831

Our job N°: 120401

Certificate type: EN 10204 ed. MARCH 2005 ☐ 2.2. ☑ 3.1. ☐ 3.2

Melting practice ☑ E.F.V.D. ☐ E.F. ☐ AOD ☐ VOD

CHEMICAL ANALISYS STEEL MILL LADLE ANALISYS

MATERIAL: ASTM A 350 LF2 HEAT: 209755 SUPPLIER: ACCIAIERIE VENETE S.p.A.

C	Mn	Si	Ni	Cr	S	P	Al	Cu	Mo	Ti	V	Nb	N	H				
%	%	%	%	%	%	%	%	%	%	%	%	%	%	ppm				
0,173	1,146	0,25	0,15	0,157	0,007	0,014	0,036	0,201	0,043	0,011	0,002	0,001	0,0081	1,7				

C.E. (Long) = 0,427

HEAT TREATMENT

TYPE	TEMP °C	HOUR	COOLING	TYPE	TEMP °C	HOUR	COOLING
NORMALIZED	900	6	AIR				

MECHANICAL TESTS

FROM PIECE ☐
FROM QTC ☑
Treat. with Pcs

REQUIRED	UTS Mpa	YS 0,2 Mpa	YS Mpa	EL %	RA %	IMPACT TEST Dir.	Type	Temp °C	Av/Min	J	HB Min/Max on pcs	
MIN	485	250		22	30	L	KV	-46	20	16	143	197
MAX	655											

OBTAINED

N° TEST	DIM mm	SECT mm	LENGHT mm	TEMP °C	DIR	UTS Mpa	YS 0,2 Mpa	YS Mpa	EL %	RA %	IMPACT TEST Dir.	Type	Temp °C	JOULE				HB Min/Max on pcs	
946	12,50	122,65	50,00	+20	L	510	320		37,0	72,1	L	KV	-46	55	67	60		148	150

OUR ITEM	YOUR ITEM	DESCRIPTION	DRAWING		QUANTITY
1	from to 0000010001	BODY FORGING 12" 150/900 578x478x353 F	RS-11-V-0552043	RS-11-V-0552043	25
	from to				
	from to				
	from to				
	from to				
	from to				

REMARKS:

MONITORING TEMPERATURE BY CONTACT THERMOCOUPLES ACCORDING TO METHOD A ACCORDING TO SPEC. MS-021000-01 REV. 05.
PIECES CONFORMING TO DIMENSIONAL AND VISUAL CONTROL.
HEAT TREATMENT FURNACE IS CALIBRATED ACCORDING TO API 6A 20° ED. ANNEX M. HBN OBTAINED ON Q.T.C.: 150.
MATERIAL ACCORDING TO SPEC. MS-021009 REV. 12 DASH 01-01 REV. 09. IMPACT TEST SIZE IS 10x10 mm.
SAMPLING MECHANICAL TEST AT 1/4 T FROM Q.T.C. SIZE: 5"x5". MATERIAL SUPPLIED IS FREE FROM RADIOACTIVE CONTAMINATION.

Material conforming ☑
Material non conforming ☐

Surveyor: METALLURGICA sider-forge s.r.l. Q.C. Dall'Osteria Luca

Inspection Office:

Cameron Approved
By: laia Date:06/14/12 11:22

METALLURGICA forge

Inspection Certificate

Quality Control Department

N° 5611 12 Date 29/08/2012

Purchaser:	Order No.:	Certificate type: EN 10204 ed. MARCH 2005
CAM SURFACE SYS-EDMONTON CAMERON CANADA 5003 93RD STREET T6E5S9 EDMONTON AB - CANADA	4503421540	☐ 2.2. ☑ 3.1. ☐ 3.2
	SIDERFORGE job No.: 121912	Melting practice ☑ E.F.V.D. ☐ E.F. ☐ AOD ☐ VOD

CHEMICAL ANALYSIS / LADLE ANALYSIS

MATERIAL: ASTM A 350 LF2 HEAT: 412029 SUPPLIER: Acciaieria Bertoli Safau S p A

C	Mn	Si	Ni	Cr	S	P	Al	Cu	Mo	Ti	V	Nb	N	H				
%	%	%	%	%	%	%	%	%	%	%	%	%	%	ppm				
0,19	1,16	0,2	0,08	0,12	0,003	0,007	0,022	0,19	0,02	0,0018	0,003	0,002	0.0083	1,4				

C.E. (Long) = 0,429

HEAT TREATMENT

TYPE	TEMP °C	HOURS	COOLING	TYPE	TEMP °C	HOURS	COOLING
NORMALIZING	910	8	AIR				

MECHANICAL TESTS

FROM PIECE ☐

FROM QTC ☑

REQUIRED	UTS MPa	YS 0,2 MPa	YS MPa	EL %	RA %	IMPACT TEST Dir.	Type	Temp °C	Av/Min	J	HB on pieces Min	Max
MIN	435	250		22	30	L	KV	-46	20	16	143	197
MAX	655											

Treated with the Pcs

OBTAINED

N° TEST	DIM mm	SECT. mm	LENGHT mm	TEMP °C	DIR	UTS MPa	YS 0,2 MPa	YS MPa	EL %	RA %	IMPACT TEST Dir.	Type	Temp °C	JOULE			HB on pieces Min	Max
2200B	12,50	122,65	50,00	+20	L	492	331		38,0	70,4	L	KV	-46	74	69	78	148	152

OUR ITEM	CUSTOMER ITEM	DESCRIPTION	DRAWING		QUANTITY
6	from to 00006 00006	CLOSURE-FE FORGING 12 150 578x305x140 F	RS-11-V-1532043	RS-11-V-1532043	14

REMARKS:

MONITORING TEMPERATURE BY CONTACT THERMOCOUPLES ACCORDING TO METHOD A ACCORDING TO SPEC. MS-021000-01 REV. 06.
PIECES CONFORMING TO DIMENSIONAL AND VISUAL CONTROL.
HEAT TREATMENT FURNACE IS CALIBRATED ACCORDING TO API 6A 20° ED. ANNEX M. HBN OBTAINED ON Q.T.C.: 143.
MATERIAL ACCORDING TO SPEC. MS-021009 REV. 13 DASH 01-01 REV. 10. IMPACT TEST SIZE IS 10x10 mm.
SAMPLING MECHANICAL TEST AT 1/4 T FROM Q.T.C. SIZE: 5"x5". MATERIAL SUPPLIED IS FREE FROM RADIOACTIVE CONTAMINATION.
COUNTRY OF ORIGIN: ITALY.

Material conforming ☑ Quality Control Dept. Surveyor:

Material non conforming ☐ D.C. Dal Osteria Luca

Page 1 of 1

Cameron Approved
By: laia Date:09/21/12 10:22

CAMERON
VALVES & MEASUREMENT

VALVE PRESSURE TEST FORM

PRODUCT/WORK ORDER INFORMATION

PART #: 9K-5012F01F01A DESCRIPTION: 12" 150 B5 FxF NACE w/G.O. SERIAL NUMBER(S): 2744032-01

PRODUCTION ORDER #: 112744032 TEST SPECIFICATION: 5A-MI-22/API-6D

CUSTOMER P/O / CAMERON S/O: _____

SHELL TEST

Test Medium	Pressure (psig)	Duration (Min)	Shell Test	
Hydrostatic	450	15 MIN	☑ Pass	☐ Fail
Nitrogen Gas			☐ Pass	☐ Fail

Gage Serial Number	Calibration Due Date	Gage Pressure Range
TG-006	5-28-2013	0-1000 PSI

SEAT TEST — **DOUBLE BLOCK & BLEED TEST** N/A ☒

Test Medium	Pressure (psig)	Duration (Min)	Side A Left Seat		Side B Right Seat		Double Block and Bleed Seat	
Hydrostatic	350	5 MIN	☑ Pass	☐ Fail	☑ Pass	☐ Fail	☐ Pass	☐ Fail
Nitrogen Gas			☐ Pass	☐ Fail	☐ Pass	☐ Fail	☐ Pass	☐ Fail
Air			☐ Pass	☐ Fail	☐ Pass	☐ Fail		

Gage Serial Number	Calibration Due Date	Gage Pressure Range
TG-006	5-28-2013	0-1000 PSI

Body Bleed Closed		Charts Required?		Differential?	
	☑ Yes		☐ Yes ☒ No		☒ N/A

Comments/Special Customer Requests:

The above specified requirements have been quality inspected and accepted

Please Print
Tested by Alex V. Date APr-15-13 Serial# 01

Tested by _____ Date _____ Serial# _____

Tested by _____ Date _____ Serial# _____

Reviewed & Approved QC06 Date 04/16/13

Customer Rep _____ Date _____

Material Test Report

VELAN INC.
7007 Cote de Liesse
Montreal
Canada H4T 1G2

Customer Name : MRC

Valve Description : 2 IN 150 class GLOBE

Figure Number : F-0074C-02TY

Quantity : 2

Date : 24-SEP-13

MATERIAL TEST RESULTS SHOWN BELOW:

IMPERIAL

CHEMICALS

MECHANICALS

[Yied & UTS (Tensile)=Ksi; Elong. & R.A.=%; F/B=Flattening/Bending; GS=Grain Size]

ASTM Code: A216-08-WCB- NORMALIZED

HEAT CODE	(C)	(Mn)	(P)	(S)	(Si)	(Cu)	(Ni)	(Cr)	(Mo)	(V)	YIELD	UTS	Elong	R.A.	Hard. (HB)	Impact (ft-lb)	at °F	F/B	GS	DESCR.
BND16C28	0.196	0.919	0.031	0.011	0.457	0.032	0.036	0.043	0.004	0.008	54.4	83.5	32.0	59.1	/	/	/			BODY
BND29D15	0.184	0.913	0.026	0.007	0.405	0.029	0.021	0.043	0.006	0.010	53.2	82.4	36.4	57.0	/	/	/			BODY

CHEMICALS

MECHANICALS

[Yied & UTS (Tensile)=Ksi; Elong. & R.A.=%; F/B=Flattening/Bending; GS=Grain Size]

ASTM Code: A216-08-WCB- NORMALIZED

HEAT CODE	(C)	(Mn)	(P)	(S)	(Si)	(Cu)	(Ni)	(Cr)	(Mo)	(V)	YIELD	UTS	Elong	R.A.	Hard. (HB)	Impact (ft-lb)	at °F	F/B	GS	DESCR.
BNC07M26	0.189	0.955	0.024	0.009	0.471	0.034	0.025	0.042	0.005	0.007	50.2	79.2	30.2	59.0	/	/	/			BONNET/COVER
BNC07M28	0.195	0.902	0.024	0.008	0.448	0.032	0.025	0.043	0.005	0.006	47.9	77.5	29.4	57.0	/	/	/			BONNET/COVER

All Velan valves are tested in accordance with specification required by the design. Valves designed to API specifications API 594, API 600, API 602, API 603, API 608 and API 609 are tested to API 598. Valves designed to B16.34 are tested to B16.34 and MSS-SP-61.

This report is issued by a computerized system and is valid without signature. The chemical and mechanical reports and testing criteria for the customer selected heat code are validated by Velan. All header info on this certificate (including customer name, valve description, figure number and quantity) has been supplied by the user of the VelCert application.

ARGUS MACHINE CO LTD P.O. - A059415-00 S.O. - 506405

AR 017258

ASCOMETAL

Département Métallurgie Qualité
Usine des Dunes - Boîte postale 41
59941 Dunkerque Cedex 2
Téléphone : 03 28 29 60 00
Télécopie : 03 28 29 60 03

DOCUMENT DE CONTROLE
Inspection Documents / Prüfbescheinigungen

Inspection Certificate 3.1
NFEN 10204 2004 / DIN EN 10204 2004 / ISO R 404 2004

Livraison : 80162402 / 000004
N° Contrôle : 030000171360
890000047509

Date : 21.04.2011
Date d'édition : 27.06.2011

ORDRE DE FABRICATION : H2087AA
WORKS ORDER NUMBER / WERKBESTELLUNG

COULEE : H2087
CAST / SCHMELZE

DESTINATAIRE DOCUMENT :
DOCUMENT FOR / EMPFÄNGER

AFFAIRE SUIVIE PAR : ORPHEE GINETTE
YOUR CONTACT IS / BEARBEITER

Société
RYERSON
7945, CORONET ROAD
EDMONTON ALB T6E 4N7
Canada

N/REFERENCE : 501060602 / 000010 (70047321)
ASCOMETAL ORDER / WERKBESTELLUNG

V/REFERENCE : SOC-13245 525/693665 (0110-3560)
YOUR ORDER / IHRE ZEICHE 22.12.2010

QUANTITE : 4,410 TO
QUANTITY / MENGE

NUANCE : A105
GRAD / WERKSTOFF

MARQUE :

PRODUIT : A105 RON ECR 4,000 IN NOR
PRODUCT DESCRIPTION / BESCHREIBUNG

SPECIFICATION CLIENT : RYERSON RYA105-LF2-EDM
SPECIFICATION / SPEZIFIKATION

IND : 1
REV / ENTWURF

DATE : 16.09.2010
DATE / DATUM

CCU : D0000006544

SPECIFICATIONS SUPP. : SANS

Analyse chimique de coulée / Ladle analysis / Schmelzenanalyse

Elément (%)

Elément	Element	Teil	C	Mn	Si	Cr	Ni	Mo	Cu	P	S	V
Mini	Spec min	Min		0,600	0,150							
Valeur	**Actual**	**Werte**	0,169	1,151	0,266	0,111	0,134	0,041	0,178	0,010	0,014	0,013
Maxi	Spec max	Max	0,230	1,350	0,300	0,300	0,400	0,120	0,400	0,035	0,035	0,080

Elément	Element	Teil	Cb
Mini	Spec min	Min	
Valeur	**Actual**	**Werte**	0,0000
Maxi	Spec max	Max	0,0200

Contraintes groupées

Elément	Mini	Valeur	Maxi
C+Mn/6+(Cr+Mo+V)/5+(Ni+Cu)/15		0,415	0,430

Caractéristiques mécaniques / Mechanical properties / Mechanische Kennwerte

Traction / tensile test /Zugversuch
Nappe / Batch number / Loss nummer : H583
Diameter of test specimen (in) 0,50
mid radius tested
Longitudinal test
Tensile test temperature (°F) 70

Elément	Element	Teil	Ys 2%	UTS	E (2in)	RA
Unité	Unit	Meinheit	PSI	PSI	%	%
Mini	Spec min	Min	45000	70500	22,0	30
Valeur	**Actual**	**Werte**	50431	73254	33,4	61
Maxi	Spec max	Max				

Résilience / Impact test / Kerbschlagproben
Nappe / Batch number / Los nummer : H583
notch test 10 x 10
Mid radius testing
Charpy V notch
Longitudinal test
Impact test temperature (°F) -50

Elément	Element	Teil	Ft/Lbs	Ft/Lbs	Ft/Lbs	% shear	% shear	% shear	Mils LE	Mils LE	Mils LE
Unité	Unit	Meinheit	Ft/Lbs	Ft/Lbs	Ft/Lbs	%	%	%	MILLS	MILLS	MILLS
Mini	Spec min	Min	15,0	15,0	15,0						
Valeur	**Actual**	**Werte**	114,2	103,9	132,6	50,0	50,0	40,0	61,0	55,0	70,0
Maxi	Spec max	Max									

Nous certifions que les produits ci-dessus sont conformes aux prescriptions de la commande, respectent la directive européenne 2000/53/CE du 18 septembre 2000 et présentent un niveau de radioactivité au plus égal à la radioactivité ambiante.

We hereby certify the above mentioned products are complying with the order requirements, are respectful of the September, 18th 2000 - 2000/53/CE - european directive, and have a radioactivity level which does not exceed that present in the environment.

Wir bestätigen hiermit dass die obengenannten Erzeugnisse den Bestellungsvorschriften, der EU-Richtlinie 2000/53/CE von 18 september 2000 entsprechen und die gelieferten Produkte keine Radioaktivität, die Höher ist als natürliche Strahlung der Umwelt, aufweisen.

ASCOMETAL
SA à directoire et conseil de surveillance
au capital de 65 285 430 EUR
331 048 132 RCS Nanterre

Siège social - Immeuble le Colisée - 8, avenue de l'arche, Faubourg de l'Arche, 92419 COURBEVOIE Cedex

ACCEPTED SUBJECT TO VERIFICATION BY ARGUS QC.
RECEIVED BY: R.M. PAGE - SEITE DATE: SEP 2 0 2011
PO# VERIFIED BY: INSP 16 DATE: SEP 2 0 2011

ACCEPTED SUBJECT TO VERIFICATION BY ARGUS QC.
RECEIVED BY: DATE:
VERIFIED BY: PO# DATE:

A059415

Blue Process Equipment Inc. SEP 30 2011 Quality Department

6/29/11

T # 4257AA

Département Métallurgie Qualité
Usine des Dunes - Boîte postale 41
59941 Dunkerque Cedex 2
Téléphone : 03 28 29 60 00
Télécopie : 03 28 29 60 03

ASCOMETAL

AFAQ ISO 9001 ISO/TS 16949

DOCUMENT DE CONTROLE
Inspection Documents / Prüfbescheinigungen

Inspection Certificate 3.1
NFEN 10204 / 2004 — DIN EN 10204 / 2004 — ISO R 404 / 2004

Livraison : 80162402 / 000004
N° Contrôle : 030000171360
890000047509

Date : 21.04.2011
Date d'édition : 27.06.2011

AR 017258

ORDRE DE FABRICATION : H2087AA
WORKS ORDER NUMBER / WERKBESTELLUNG

COULEE : H2087
CAST / SCHMELZE

AFFAIRE SUIVIE PAR : ORPHEE GINETTE
YOUR CONTACT IS / BEARBEITER

N/REFERENCE : 501060602 / 000010 (70047321)
ASCOMETAL ORDER / WERKBESTELLUNG

V/REFERENCE : SOC-13245 525/693665 (0110-3560)
YOUR ORDER / IHRE ZEICHE 22.12.2010

QUANTITE : 4,410 TO
QUANTITY / MENGE

NUANCE : A105
GRAD / WERKSTOFF

PRODUIT : A105 RON ECR 4,000 IN NOR
PRODUCT DESCRIPTION / BESCHREIBUNG

SPECIFICATION CLIENT : RYERSON RYA105-LF2-EDM
SPECIFICATION / SPEZIFIKATION

IND : 1
REV / ENTWURF

DATE : 16.09.2010
DATE / DATUM

SPECIFICATIONS SUPP. : SANS

DESTINATAIRE DOCUMENT :
DOCUMENT FOR / EMPFÄNGER

Société
RYERSON
7945, CORONET ROAD
EDMONTON ALB T6E 4N7
Canada

MARQUE :

CCU : D0000006544

Résilience / Impact test / Kerbschlagproben
Nappe / Batch number / Los numiner : H583
notch test 10 x 10
Mid radius testing
Charpy V notch
Impact test temperature (°F) -50
transverse test

Elément / Element / Teil	Unité / Unit / Meinheit	Ft/Lbs	Ft/Lbs	Ft/Lbs	% shear	% shear	% shear	Mils LE	Mils LE	Mils LE
		Ft/Lbs	Ft/Lbs	Ft/Lbs	%	%	%	MILLS	MILLS	MILLS
Mini	Spec min	Min	15,0	15,0	15,0					
Valeur	**Actual**	**Werte**	17,7	16,6	16,6	20,0	20,0	20,0	9,0	9,0	9,0
Maxi	Spec max	Max								

Traitement thermique / Heat treatment / Warmbehandlung

Traitement	T Min	T	T Max	Durée	Refroidissement
Norm. temp.		1675 °F		2,00 hrs	Normalized air cooled

Dureté de surface sur barres / Bars surface hardness / Stäbe Randhärte

Elément	Element	Teil	BHN top
Mini	Spec min	Min	
Valeur	**Actual**	**Werte**	170
Maxi	Spec max	Max	187

Autres résultats / Other results / Andere Prüfergebnisse

Elément	Mini	Valeur	Maxi
Grain size M-Quaid Ehn	5	7	8
Reduction ratio	3,00	34,93	

Electric furnace - vacuum degassed
Conforms to NACE MR 01-75
Ultrasonic testing 100% satisfactory

LIN

Conforms to ASTM A576
Conforms to ASTM A350
Conforms to API 6A PSL3

Produit en France / Product of France / In Frankreich ergestellt

Blue Process Equipment Inc. SEP 30 2011 Quality Department

Nous certifions que les produits ci-dessus sont conformes aux prescriptions de la commande, respectent la directive européenne 2000/53/CE du 18 septembre 2000 et présentent un niveau de radioactivité au plus égal à la radioactivité ambiante.

We hereby certify the above mentioned products are complying with the order requirements, are respectful of the September, 18th 2000 - 2000/53/CE - european directive, and have a radioactivity level which does not exceed that present in the environment.

Wir bestätigen hiermit dass die obengenannten Erzeugnisse den Bestellungsvorschriften, der EU-Richtlinie 2000/53/CE vom 18 septembre 2000 entsprechen und die gelieferten Produkte keine Radioaktivität, die Höher ist als natürliche Strahlung der Amwelt, aufweisen

ACCEPTED SUBJECT TO VERIFICATION BY ARGUS QC.
RECEIVED BY: R.M. DATE: SEP 20 2011
PO# VERIFIED BY: INSP 16 DATE: SEP 20 2011

A059415

ASCOMETAL

Département Métallurgie Qualité
Usine des Dunes - Boîte postale 41
59941 Dunkerque Cedex 2
Téléphone : 03 28 29 60 00
Télécopie : 03 28 29 60 03

AFAQ ISO 9001 ISO/TS 16949

DOCUMENT DE CONTROLE
Inspection Documents / Prüfbescheinigungen

Inspection Certificate 3.1
NFEN 10204 2004 / DIN EN 10204 2004 / ISO R 404 2004

Livraison : 80162402 / 000004
N° Contrôle : 030000171360
890000047509

Date : 21.04.2011
Date d'édition : 27.06.2011

ORDRE DE FABRICATION / WORKS ORDER NUMBER / WERKBESTELLUNG	: H2087AA	COULEE / CAST - SCHMELZE : H2087	DESTINATAIRE DOCUMENT / DOCUMENT FOR - EMPFANGER :
AFFAIRE SUIVIE PAR / YOUR CONTACT IS / BEARBEITER	: ORPHEE GINETTE		Société RYERSON 7945, CORONET ROAD EDMONTON ALB T6E 4N7 Canada
N/REFERENCE / ASCOMETAL ORDER / WERKBESTELLUNG	: 501060602 / 000010 (70047321)		
V/REFERENCE / YOUR ORDER / IHRE ZEICHE	: SOC-13245 S25/693665 (0110-3560) 22.12.2010		
QUANTITE / QUANTITY / MENGE	: 4,410 TO	NUANCE / GRAD / WERKSTOFF : A105	MARQUE :
PRODUIT / PRODUCT DESCRIPTION / BESCHREIBUNG	: A105 RON ECR 4,000 IN NOR		
SPECIFICATION CLIENT / SPECIFICATION / SPEZIFIKATION	: RYERSON RYA105-LF2-EDM		
IND / REV / ENTWURF	: 1	DATE / DATE / DATUM : 16.09.2010	CCU : D000006544
SPECIFICATIONS SUPP.	: SANS		

AR 017258

Visa du chef de service
Stamp of inspection supervisor
Der Werkssachverständige
Anne Fasquelle

A Fasquelle

Blue Process Equipment Inc. SEP 30 2013 Quality Department

Nous certifions que les produits ci-dessus sont conformes aux prescriptions de la commande, respectent la directive européenne 2000/53/CE du 18 septembre 2000 et présentent un niveau de radioactivité au plus égal à la radioactivité ambiante.

We hereby certify the above mentioned products are complying with the order requirements, are respectful of the September, 18th 2000 - 2000/53/CE - european directive, and have a radioactivity level which does not exceed that present in the environment.

Wir bestätigen hiermit dass die obengenannten Erzeugnisse den Bestellungvorschriften, der EU-Richtlinie 2000/53/CE von 18 september 2000 entsprechen und die gelieferten Produkte keine Radioaktivität, die Höher ist als natürliche Strahlung der Amwelt, aufweisen.

ACCEPTED SUBJECT TO VERIFICATION BY ARGUS QC.
RECEIVED BY: R.M. DATE SEP 20 2011
PO# A059415 VERIFIED BY: INSP 16 DATE SEP 20 2011

5Blue
Process Equipment Inc.

RECEIVING INSPECTION REPORT

DATE: SEP 0 9 2013 PURCHASE ORDER# 1108-82

CUSTOMER/OWNER Ball Valves

DESCRIPTION OF MATERIAL:	PLATE	TUBE /PIPE	BAR	FITTINGS	

		YES	NO
1	MATERIALS CORRECT TO PURCHASE ORDER:	✓	
2	MTR SUPPLIED WITH MATERIALS	✓	
3	MTR CHECKED AGAINST PACKING SLIP	✓	
4	MTR CORRECT FOR THIS MATERIAL	✓	
5	IS MATERIALS IN GOOD CONDITION (NO DAMAGE):	✓	
6	IS MATERIAL THE SAME SIZE AND SCHEDULE AS REQUIRED ON THE PURCHASE ORDER:	✓	
7	IS MATERIAL THE CORRECT GRADE AS REQUIRED ON THE PURCHASE ORDER	✓	
8	IS THE MATERIAL LEGIBLY MARKED FROM THE SUPPLIER? THIS MAY BE STAMPED or STENCILED (record Grade, Type, Heat # And any other relevant information)	✓	

5 Blue Process Equipment Inc. SEP 0 9 2013 Quality Department

NOTE: If any of these inspection steps cannot be completed the inspector shall notify the QS ASAP. The QS shall make out a NCR detailing the discrepancies and the material in question shall be quarantined until a satisfactory solution to the problem can be resolved. This may include rework or sending the material back to the supplier

SEP 0 9 2013

Inspector : _____ Signature: _____ Date _____

ROSEMARY KUNTZ
SAFETY / MTR
(780) 955-2040E:226

Universe Machine CORPORATION

Tel (780) 468-5211
Fax (780) 468-5430
E-mail: sales@umcorp.com

5545-91st Street,
Edmonton, Alberta
Canada T6E 6K4

Report Numb.: PTR13-6987
Date: 8/23/2013
Work Order: 54672-1

PRESSURE TESTING REPORT

Customer: C E FRANKLIN

Cust PO: 3270345-OS-4900

Valve Identification

Manufacturer: GROVE **Type:** Ball Valve
Size/Connections: 2" RF
Rating: 300#
Model/Figure: 9K-4C02F03F02A

Specifications

API 598	☑
Z.245.15	☐
API 6A	☐
API 6D	☐

Other:

Test Pressure Units

PSI	☑
KPA	☐

Gauge Identification No	Calibration Due Dates
1.- UM-41	9/26/2013
2.- UM-43	9/27/2013
3.-	
4.-	

Serial Number	2817307-10	2817307-03	2817307-07		
ACT. S/N					
Body Ht					
Bonnet Ht					
TAG #					
Quantity	1	1	1		
Shell Test - High	15 SEC @ 1125 PSI	15 SEC @ 1125 PSI	15 SEC @ 1125 PSI		
Closure - High					
Back Seat					
Gauge/Medium	G1 & G2 WATER/GLYCOL	G1 & G2 WATER/GLYCOL	G1 & G2 WATER/GLYCOL		
Steam Jacket					
Shell Test - Low					
Closure - Low					
Gauge/Medium					
Status	Pass	Pass	Pass		
Operator	DR DR	DR DR	DR DR		
3rd Party Witness					

Blue Process Equipment Inc. SEP 09 2013 Quality Department

Notes:

Universe Machine CORPORATION

Tel (780) 468-5211
Fax (780) 468-5430
E-mail: sales@umcorp.com

5545-91st Street,
Edmonton, Alberta
Canada T6E 6K4

Report Numb..: PTR13-6986
Date: 8/23/2013
Work Order: 54703-1

PRESSURE TESTING REPORT

Customer: C E FRANKLIN **Cust PO:** 3270345-OS-4900

Valve Identification

Manufacturer: GROVE **Type:** BALLVALVE
Size/Connections: 2" RF
Rating: 300#
Model/Figure: 9K-4C02F03F02A

Specifications

API 598 ☑
Z.245.15 ☐
API 6A ☐
API 6D ☐
Other:

Test Pressure Units

PSI ☑
KPA ☐

Gauge Identification No	Calibration Due Dates
1.- UM-41	9/26/2013
2.- UM-43	9/27/2013
3.-	
4.-	

Serial Number	2846447-02	2846447-01			
ACT. S/N					
Body Ht					
Bonnet Ht					
TAG #					
Quantity	1	1			
Shell Test - High	15 SEC @ 1125 PSI	15 SEC @ 1125 PSI			
Closure - High					
Back Seat					
Gauge/Medium	G1 & G2 WATER/GLYCOL	G1 & G2 WATER/GLYCOL			
Steam Jacket					
Shell Test - Low					
Closure - Low					
Gauge/Medium					
Status	Pass	Pass			
Operator	DR DR	DR DR			
3rd Party Witness					

Value Process Equipment Inc. SEP 0 9 2013 Quality Department

Notes:

5Blue
Process Equipment Inc.

RECEIVING INSPECTION REPORT

DATE: SEP 2 0 2013 PURCHASE ORDER# 1108-82

CUSTOMER/OWNER _____ Gauge Valve

DESCRIPTION OF MATERIAL:	PLATE	TUBE /PIPE	BAR	FITTINGS	

		YES	NO
1	MATERIALS CORRECT TO PURCHASE ORDER:	✓	
2	MTR SUPPLIED WITH MATERIALS	✓	
3	MTR CHECKED AGAINST PACKING SLIP	✓	
4	MTR CORRECT FOR THIS MATERIAL	✓	
5	IS MATERIALS IN GOOD CONDITION (NO DAMAGE):	✓	
6	IS MATERIAL THE SAME SIZE AND SCHEDULE AS REQUIRED ON THE PURCHASE ORDER:	✓	
7	IS MATERIAL THE CORRECT GRADE AS REQUIRED ON THE PURCHASE ORDER	✓	
8	IS THE MATERIAL LEGIBLY MARKED FROM THE SUPPLIER? THIS MAY BE STAMPED or STENCILED (record Grade, Type, Heat # And any other relevant information)	✓	

5 Blue Process Equipment Inc. SEP 2 0 2013 Quality Department

NOTE: If any of these inspection steps cannot be completed the inspector shall notify the QS ASAP. The QS shall make out a NCR detailing the discrepancies and the material in question shall be quarantined until a satisfactory solution to the problem can be resolved. This may include rework or sending the material back to the supplier

Inspector : _____ Signature: _____ Date SEP 2 0 2013

ROSEMARY KUNTZ
SAFETY / MTR
(780) 955-2040E:226

PENTAIR

VALVES & CONTROLS

PV&C Western Warehouse
5538 - 48 Street
Edmonton, AB T6B 2Z1
(780) 461-2228 Fax (780) 461-6242

PACKING SLIP

ORDER #
3180476-00

ORDER DATE	CUSTOMER PO#	PAGE
09/16/13	P7780-5B1108-82	1

INSIDE	OUTSIDE	TAKEN BY
beja	LOJO	beja

CUST.#: 30310

BILL TO: 5 BLUE PROCESS EQUIPMENT INC
2303 - 8TH STREET
NISKU, AB T9E 7Z3

CORRESPONDENCE TO: Pentair Valves
5538-48 Street
Edmonton, AB T6B 2Z1

SHIP TO: 5 BLUE PROCESS EQUIPMENT INC
2303 - 8TH STREET
NISKU, AB T9E 7Z3

SHIP POINT		INSTRUCTIONS	
Pentair Valves			
SHIP VIA	SHIP DATE	PICKED	TERMS
DUNRITE COUR	09/16/13	09/16/13	Net 30 Days

LINE NO.	PRODUCT AND DESCRIPTION	BIN LOCATION	QUANTITY ORDERED	QUANTITY B.O.	QTY. SHIPPED	QTY. U/M	RECEIVED
1	M25VIS-46 M25 GAUGE VALVE 316 S.S. 3/4"MNPT x 1/2"FNPT CON	21/02/01 / 30/05/04 / 32/01/05 / SA/LE/S /	1.00 C289	0.00	1.00	EA	1
2	DOCUMENTATION (IN HOUSE)AS FOLLOWS: > INCLUDE MTR'S		1.00	0.00	1.00	EA	1

5 Blue Process Equipment Inc
SEP 17 2013
Quality Department

RECEIVED
17SEP2013

2	LINES TOTAL	# OF LINES NOT PRINTED ▶	0	QTY. SHIPPED TOTAL ▶	2.00

PICKED BY	PACKED BY	CHECKED BY	CUBE	WEIGHT	FREIGHT CHARGE
			0.00000	0.00000	

RECEIVED BY	DATE RECEIVED

Last Page

Original Copy

Exports - These commodities, technology or software were exported from the United States in accordance with the Export Administration Regulations. Diversion contrary to U.S. law is prohibited.

Domestic Destinations - The purchaser of items shipping to USA destinations is solely responsible for complying with applicable U.S. export laws and regulations

05/24/2005 16:16 AASI Q.A. → 919564302502 NO.862 D03

05/18/2005 From: AMERICAN ALLOY STEEL To: TYCO VALVES & CONTROL
P.O.# :PO2325 S.O.# :249697 AA PL#:1.517149
Item :1 (4 PC) 1-1/2" X 1-1/2" DIA. ROUND BAR 144" LG

Zeugnis-Nr. / Certificate no. / No. de certificat: 179830

Bescheinigung über Werkstoffprüfung nach EN 10204 / Certificate of material tests according to EN 10204 / Certificat des essais des matériaux selon EN 10204: 3.1.B

Die Lieferung entspricht den vereinbarten Lieferbedingungen. The above mentioned material have been delivered in accordance with the terms of the order. La livraison correspond aux conditions de livraison convenues.

BGH Edelstahl Freital GmbH, Postfach 10 15 88, D-01691 Freital

BGH Speciality Steel, Inc.

6430 Brystone Drive
TX77041 Houston, Texas
USA

BGH EDELSTAHL FREITAL

Kunden-Bestell-Nr. / Customer order no. / Cde. no. du client: 56726 American All
BGH SO 1466

BGH-Auftrags-Nr. / BGH works no. / BGH référence: 49011401/61958

Zeichen des Lieferwerkes / Trade mark / Signe du fournisseur

Stempel des Werksachverständigen / Inspector's stamp / Poinçon de l'inspecteur

BGH Q404

Product	Round bars,unmachined
Werkstoff / Quality	LF 2
Requirements	ASTM A350/350M2002b A 105 ,ASME SA 105 2001 LF2 ,ASME SA 350 2001 Grade 70 ,ASTM A675 90a(b2000) Grade C ,ASTM A696 90a(b2000) A 105 ,ASTM A 105/105M 2002

Besichtigung und Maßnachprüfung / Inspection and dimensional control / Inspection et contrôle de dimension	Erschmelzung/Nachbehandlung / Melting process/secondary refining / Mode d'élaboration/traitement ultérieur	Verwechslungsprüfung (spectralanalysen) / Identification test (spectral-analysis) / examination d'identification (analyse spectrale)
without objection	E - LF/VD	without objection

Pos. Item	Anzahl Quantity	Abmessung Dimension	Gewicht kg Weight kg	Schmelz-Nr. Heat-No.
1	71	Dia. 38,00 mm (1,5")	6236 11541 lbs	17149

Schmelze Heat %	C	Si	Mn	P	S	Cr	Mo	Ni	Cu	Nb	V
17149	0,207	0,25	1,00	0,008	0,004	0,10	0,01	0,04	0,03	0,005	0,004

Cr+Mo: 0,110 C-Aqu: 0,401

Condition of heat treat: hardened + tempered

Probe-Nr. Test-No.	Lage	Temp. °F	Rp0,2 ksi		Rm ksi	A4 %	Z %	Kerbschlagarbeit Impact value ft lbs		Probenform Shape of test piece Charpy-V °F		Härte HB Hardness
210AE1	L	+68	85		77	38	78	128	125	127	-50	159

US test ASTM A 388, /no objection.

RAW MTL# 05-0002-309
HEAT# 17149 / H/C = C 289
INSP. J. Martinez 5-25-05

Certified a true copy of the original, retained in our file.
AMERICAN ALLOY STEEL, INC.
AG 9-23-05

Ht. No. 17149 Yellow
SA-675 Gr. 70
SA-696 Gr. C
SA-350 LF2
SA-105
1-1/2" Dia
Dark Green

Anlagen / Encl. / Annexe	Freital, den / Place and date / Lieu et date	Der Werksachverständige / Works-Inspector / L'expert de l'usine
	18.02.2004	BERNDT

Das Zeugnis wurde maschinell erstellt und ist auch ohne Unterschrift gültig. This certificate was generated by data system it must not be signed for validity of it. Ce certificat a été établi sur système informatique et est valable sans signature autre.

5 Blue Process Equipment Inc. SEP 20 2013 Quality Department

05/24/2005 16:16 AASI Q.A. → 919564302502 NO.862 P03

05/18/2005 From: AMERICAN ALLOY STEEL To: TYCO VALVES & CONTROL
P.O.# :PO2325 S.O.# :249697 AA PL#:1.517149
Item :1 (4 PC) 1-1/2" X 1-1/2" DIA. ROUND BAR 144" LG

Zeugnis-Nr. / Certificate no. / No. de certificat: 179830

Bescheinigung über Werkstoffprüfung nach EN 10204 / Certificate of material tests according to EN 10204 / Certificat des essais des matériaux selon EN 10204: 3.1.B

Die Lieferung entspricht den vereinbarten Lieferbedingungen. / The above mentioned material have been delivered in accordance with the terms of the order. / La livraison correspond aux conditions de livraison convenues.

BGH Edelstahl Freital GmbH, Postfach 10 15 88, D-01691 Freital

BGH Speciality Steel, Inc.

5430 Brystone Drive
TX77041 Houston, Texas
USA

BGH EDELSTAHL FREITAL

Kunden-Sachl-Nr. / Customer order no. / Cde. no. du client: 56726 American All
BGH SO 1468

BGH-Auftrags-Nr. / BGH works no. / BGH référence: 49011401/51958

Zeichen des Lieferwerkes / Trade mark / Signe du fournisseur
Stempel des Werkssachverständigen / Inspector's stamp / Poinçon de l'inspecteur

BGH Q404

Product	Round bars,unmachined
Werkstoff / Quality	LF 2
Requirements	ASTM A350/350M2002b A 105 ,ASME SA 105 2001 LF2 ,ASME SA 350 2001 Grade 70 ,ASTM A675 90a(b2000) Grade C ,ASTM A696 90a(b2000) A 105 ,ASTM A 105/105M 2002

Besichtigung und Maßnachprüfung / Inspection and dimensional control / Inspection et contrôle de dimension	Erschmelzung/Nachbehandlung / Mailing process/secondary refining / Mode d'élaboration/traitement ultérieur	Verwechslungsprüfung (spektralanalyse) / Identification test (spectral analysis) / examination d'identification (analyse spectrale)
without objection	E - LF/VD	without objection

Pos. Item	Anzahl Quantity	Abmessung Dimension	Gewicht kg Weight kg	Schmelz-Nr. Heat-No.
1	71	Dia. 38,00 mm (1,5")	5236 11541 lbs	17149

Schmelze Heat %	C	Si	Mn	P	S	Cr	Mo	Ni	Cu	Nb	V
17149	0,207	0,25	1,00	0,008	0,004	0,10	0,01	0,04	0,03	0,005	0,004

Cr+Mo: 0,110 C-Aqu: 0,401

Condition of heat treat: hardened + tempered

Probe-Nr. Test-No.	Lage	Temp. °F	Rp0,2 ksi		Rm ksi	A4 %	Z %	Kerbschlagarbeit Impact value ft lbs		Probenform Shape of test piece Charpy-V °F		Härte HB Hardness
210AE1	L	+68	85		77	38	78	128	125	127	-50	159

US test ASTM A 388, /no objection.

RAW MTL# 05-0002-309
HEAT# 17149/H/C = C289
INSP. J. Martinez 5-25-05

Certified a true copy of the original, retained in our file.
AMERICAN ALLOY STEEL, INC.
AG 5-25-05

Hi. No. 17149 Yellow
SA-675 Gr. 70
SA-696 Gr. C
SA-105
SA-350 LF2
1-1/2" Dia
Dark Green

Antagen / Encl. / Annexe

Freital, den / Place and date / Lieu et date: 18.02.2004

Der Werkssachverständige / Works-inspector / L'expert de l'usine: BERNDT

Das Zeugnis wurde maschinell erstellt und ist auch ohne Unterschrift gültig.

This certificate was generated by data system it must not be signed for validity at will. Ce certificat a été élaboré sur système informatique et est valable sans signature aussi.

Bible Process Equipment Inc. SEP 20 2013 Quality Department

5Blue
Process Equipment Inc.

RECEIVING INSPECTION REPORT

DATE: NOV 0 1 2013 **PURCHASE ORDER#** 1108-82

CUSTOMER/OWNER Dual Chamber with Rem

DESCRIPTION OF MATERIAL:	PLATE	TUBE /PIPE	BAR	FITTINGS	

		YES	NO
1	MATERIALS CORRECT TO PURCHASE ORDER:	✓	
2	MTR SUPPLIED WITH MATERIALS	✓	
3	MTR CHECKED AGAINST PACKING SLIP	✓	
4	MTR CORRECT FOR THIS MATERIAL	✓	
5	IS MATERIALS IN GOOD CONDITION (NO DAMAGE):	✓	
6	IS MATERIAL THE SAME SIZE AND SCHEDULE AS REQUIRED ON THE PURCHASE ORDER:	✓	
7	IS MATERIAL THE CORRECT GRADE AS REQUIRED ON THE PURCHASE ORDER	✓	
8	IS THE MATERIAL LEGIBLY MARKED FROM THE SUPPLIER? THIS MAY BE STAMPED or STENCILED (record Grade. Type, Heat # And any other relevant information)	✓	

5 Blue Process Equipment Inc. NOV 0 1 2013 Quality Department

NOTE: If any of these inspection steps cannot be completed the inspector shall notify the QS ASAP. The QS shall make out a NCR detailing the discrepancies and the material in question shall be quarantined until a satisfactory solution to the problem can be resolved. This may include rework or sending the material back to the supplier

NOV 0 1 2013

Inspector : _____ **Signature:** _____ **Date** _____

ROSEMARY KUNTZ
SAFETY / MTR
(780) 955-2040E:228

Canalta
Flow Measurement
A Canalta Controls Company

Packing Slip

Shipment Number: SS012289
Page: 1

Canalta Controls Ltd.
6759 - 65th Avenue , Red Deer, AB T4P 1X5
Tel.:+1 (403) 342-4494 Fax:+1 (403) 346 7110
www.canaltacontrols.com

Bill To:
5 BLUE PROCESS EQUIPMENT Inc
Rob Martin
2303 - 8th STREET
Nisku, AB T9E 7Z2
CANADA

Ship To:
5 BLUE PROCESS EQUIPMENT Inc
2303 - 8th STREET
Nisku, AB T9E 7Z2
CANADA

Customer Order No.	Shipment Date	Ship Via	Our Order No.	SalesPerson
P7479A-5B1108-82	25-Oct-2013		SO009510	Enrique Turcios

No.	Item No.	Unit	Shipped	Ordered	Back Ordered
1	1430RFDC40SSAW00WF_AAA9-FF-CC-N-PX DUAL CHAMBER W/ RUN, 14" 300RF, SCH40, 3PC Serial No. :D140012 ✓ NACE(SS Trim), Grease Seat, 300 WxF AGA 2000 Ed., A216 WCB, LEFT HAND Pipe D/S: Hot Finish, A106B / A105 Pipe U/S: Hot Finish, A333GR6 / A350LF2 Meter Run OAL: 286" AGA 2000 Upstream: 300RF, Downstream: 300RF Contour Flow Conditioner: RF, 0.75 Beta Outlets: 1"TOL, 1"TOL Treatments: XRAY, PWHT Includes Hydro Test, MTR's, Canalta Inspection Canalta Standard Paint	Each	1	1	
2	1460DC13-316-8.625-250 ORIF PLT, 14"x1/4",8.625", 316	Each	1	1	1
3	14DC08FT-40-250-688 14" Teflon Clip Seal S40, .250"PLT .688" GAP	Each	1	1	1

5 Blue Process Equipment Inc.
NOV 01 2013
Quality Department

RECEIVED OCT 29 2013

Packed By	Checked By

Canalta

AGA Orifice Fitting Inspection Report

FITTING: Serial Number D140013 Tag Number _____ Date Sept 12/13

Body Heat Number 12693 Top Housing Heat Number 2135H Overall Length 21 3/8

Line Size 14 Schedule 40 ANSI Class 300 Flange Type RFWN Material WCB

INSPECTED TO:

AGA 3, 2nd ED. (85 Ed.) ☐

AGA 3,3rd / 4th ED. (92 / 00 Ed.) ☒

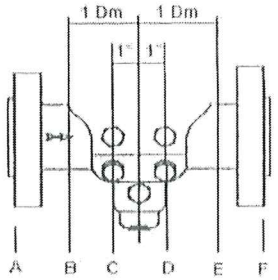

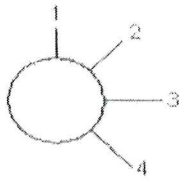

From Flow Direction

PLEASE NOTE:
This drawing may not accurately represent the model ordered, it is intended as a reference of the spots checked for bore diameters only.
Not all points may be applicable to all models and sizes.

ORIFICE FITTING INTERNAL DIAMETER:

PLANE	UPSTREAM POINTS			DOWNSTREAM POINTS		
	A	B	C	D	E	F
1	13.125	13.125	13.124	13.124	13.124	13.124
2	↑	↑	↑	↑	↑	↑
3	↕	↕	↕	↕	↕	↕
4	↓	↓	↓	↓	↓	↓
AVERAGE	13.125	13.125	13.124	13.124	13.124	13.124
TEMP.	70	70	70	70	70	70
ROUGHNESS	120	120	120	120	120	120

Maximum Upstream 1.0025 Dm= 13.157 Average of Column "C" 13.124 =Dm Maximum Downstream 1.005 Dm= 13.190

Minimum Upstream 0.9975 Dm= 13.091 Minimum Downstream 0.995 Dm= 13.058

PRESSURE TAP TESTS:

0.375" ☐
0.500" ☒

	TOP				BOTTOM			
	U/S RIGHT	U/S LEFT	D/S RIGHT	D/S LEFT	U/S RIGHT	U/S LEFT	D/S RIGHT	D/S LEFT
TAP SIZE ± 0.016"	Pass	Pass	Pass	Pass				
TAP LOCATION	+3	-3	-2	-2				
PRESSURE TEST	Pass	Pass	Pass	Pass				

INSPECTOR JW DATE 11/16/11

ECCENTRICITY:

	RIGHT	LEFT		TOP	BOTTOM
HORIZONTAL	0.763	0.760	VERTICAL	0.767	0.757
HORIZONTAL TOLERANCE	0.040		VERTICAL TOLERANCE	0.059	
HORIZONTAL ECC.	0.003		VERTICAL ECC.	0.005	

INSPECTOR JW DATE Sept 25/13

PLATE SEAL GAP:

TARGET SEAL GAP WIDTH 0.562" ☐ 0.688" ☒ 0.813" ☐ 0.875" ☐

	Top	Bottom	Right	Left
SEAL GAP WIDTH (+0.007" / -0.003")	0.688	0.688	0.688	0.688

INSPECTOR JW DATE 11/16/11

5 Blue Process Equipment Inc. NOV 01 2013 Quality Department

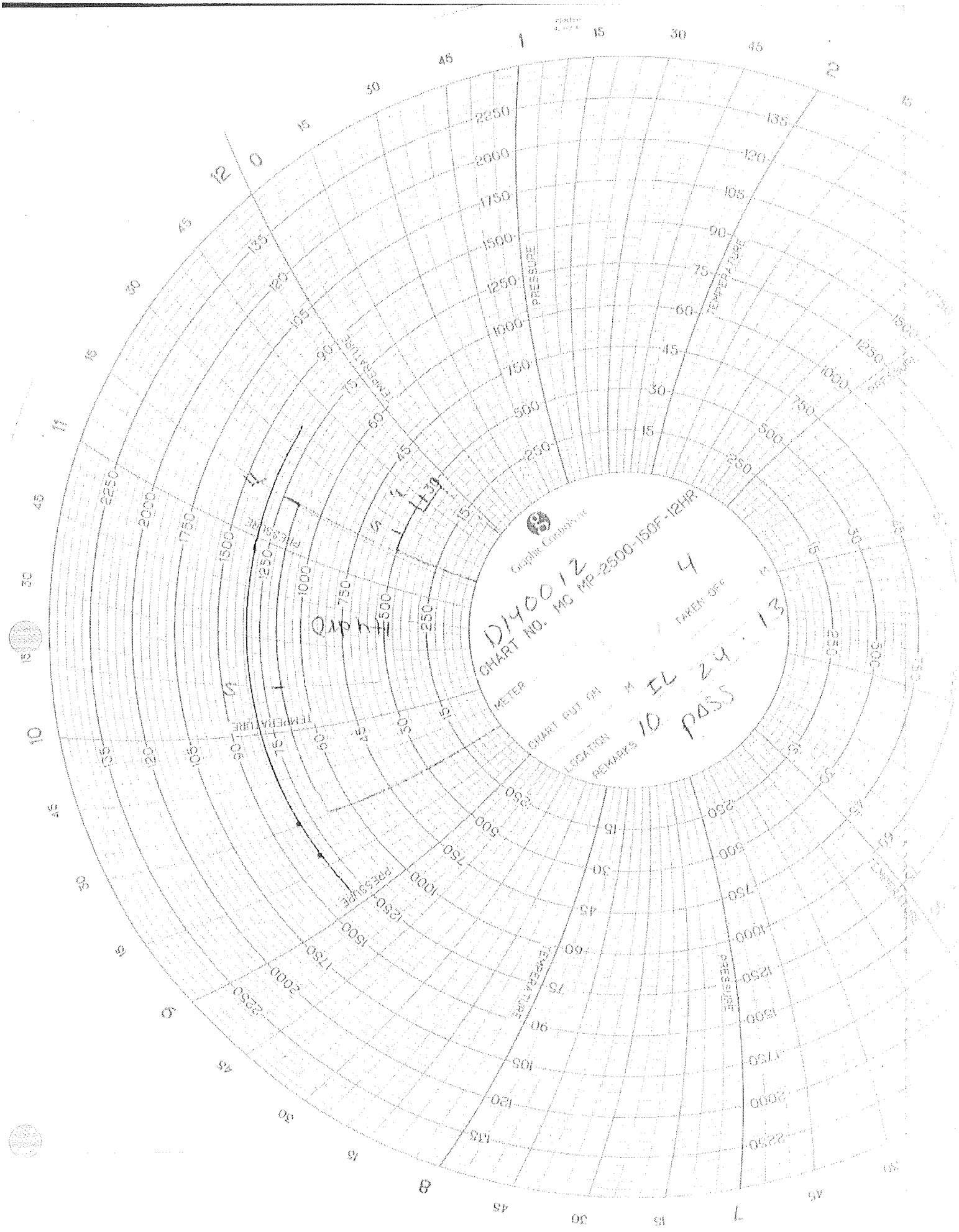
Graphic Controls Inc
D140012
CHART NO. MC MP-2500-150F-12HR
4
TAKEN OFF
METER
CHART PUT ON
LOCATION
REMARKS
IL 24 13
10 pass
PRESSURE
TEMPERATURE

Canalta

HYDRO / NITRO / BLANK PLATE AND SEAT TEST

SERIAL NUMBER: 01400 12 CHART USED: 4

HYDRO TEST REPORT

TEST PRESSURE (PSI): 1130
DURATION (MINUTES): 60
TECHNICIAN: IL
WITNESS: EA
DATE: 10 · 24 · 13

RESULT:
☑ PASS
☐ FAIL

NITRO TEST REPOT

TEST PRESSURE (PSI): 500
DURATION (MINUTES): 15
TECHNICIAN: IL
WITNESS: EA
DATE: 10 - 24 · 13

RESULT:
☑ PASS
☐ FAIL

SEAT TEST

GREASE SEAT ☑
SOFT SEAT ☐
EQUALIZER VALVE OPERATIONAL ☑
GREASE GUN OPERATIONAL ☑

TEST PRESSURE (PSI): 450
DURATION (MINUTES): 10
TECHNICIAN: IL
WITNESS: EA
DATE: 10 · 24 · 13

RESULT:
☑ PASS
☐ FAIL

BLANK PLATE REPORT

PRESSURE APPLIED: 15 PSI
SEAL MATERIAL: HNBR
VACUUM APPLIED TO D/S ☐
PRESSURE APPLIED TO U/S ☑
TECHNICIAN: IL
WITNESS: EA
DATE: 10 · 24 · 13

RESULT:
☑ PASS
☐ FAIL

GAUGE SERIAL NUMBER: _____

SC FITTINGS : 30 MINUTE HYDRO TEST AND BLANK PLATE TEST
DC FITTINGS: 60 MINUTE HYDRO, 15 MINUTE NITRO, SEAT TEST AND BLANK PLATE TEST

Canalta
6758 - 65th Avenue, Red Deer, Alberta T4P 1X5
Ph (403) 342-4466 Fax (403) 346-7110
Email: canalta@canaltaflow.com

Dual Chamber Orifice Fitting Datasheet

General	1	Tag No.	
	2	Line No.	
	3	Line Size/Schedule	6" SCH 80
	4	Measurement Standard	AGA 3 2000 Ed
	5	Quantity	1
	6	Paint	Standard
Orifice Plate	1	Material	316 SS
	2	Thickness (inches)	0.25
	3	Beta(b) = d/D (installed)	0.65
	4	Bore Diameter (d) (inches)	3.900
	5	Max Allowable Beta (b) = d/D	0.75
	6	Max Allow. Orifice Bore Diam. (d) (inches)	3.75
	7	Vent / Drain	-
	8	Seal Assembly	Teflon - Snap Style Collar
	9	Plate Holder Material	CF8M Stainless
Orifice Fitting	1	Body Material	A216 WCB
	2	Body Size / Rating	14" 300
	3	Body Connections	Up Weld Down RF
	4	Seal Gap	68800
	5	Trim Material	Corrosion 316 SS
	6	Seal Style	Double
	7	Tap Hole Diameter	0.6
	8	Inside Diameter	11.134
	9	Stud Bolt / Nut Material	A193 B7/2H
	10	Engineering Design Standard	No special coating B16.34-2009
	11	Tap Location	1.000" from plate face
	12	Tap Connection Style	1/2" NPT
	13	Sets of Taps	2
	14	Shaft Orientation	Left
	15	Valve Cut-out Mechanism	No
Meter Tube	1	Tube Material	A106B
	2	Pipe Grade	Hot Finish
	3	Pipe Connection Type / Rating	14" 300
	4	Pipe (Other) Connection Types	Up RF Down RF
	5	Flange Material	A105
	6	Flow Conditioner Type / Material	Canada (316SS)
	7	Conditioner/Vane Connection	RF
	8	Stud Bolt / Nut Material	A193 B7/A
	9	Gasket Material	No special coating 316SS Flexitallic CG-Kinit
	10	Pipe Measurement Standard	ASA 3000 Carbon All
	11	Engineering Design Standard	B31.3-2010
Service Conditions	1	Fluid and State	
	2	Corrosive Component	
	3	Flow	Min Max
	4	Normal Flow	
	5	Inlet Press. / Design Press. (PSIG)	
	6	Max Differential "W.C.	
	7	Design Temp / Operating Temp (°F)	
	8	S.G.	

Customer:	NOBLE PROPERTY EQUIPMENT Inc
Customer P.O.#	P2479-001 Rev 02
P.O.#	P2479-001 Rev 02
Sales Quote:	SQ018788 Date: 10/10/13
Sales Order:	SO099518 Type: Rental
Sales Contact	Enrique Torres
Prod. Order:	Date:

RP6451

Drawing Name:
Dimensions (in mm)

OD1:	20"	N1:	14"
ID 1:	18"	N2:	6"
ID 2:	10"	N3:	
H:	11"	N4:	
OD:		N5:	
		N6:	
		N7:	
		N8:	

Overall Length Tolerance +/- 1/4"
Weld Bevels: 37.5° +/- 2.5°

Non Destructive Testing
- [X] RT AT 100% to shop rule ASME B31.3 Normal
- [ ] MPI
- [ ] Liquid Penetrant
- [ ] Hardness 10%
- [X] PMI
- [ ] Ultrasonic

Hydrotest (PSIG): 1.5 Design Pressure
Coil Allowance: 1/16
CVN (Joules): -46 @ -29 to 100°C

Weld Procedures
- [X] CCL - Ambient (WPS-1-FCAW)
- [ ] CCLS (Low Temp SMAW)
- [X] CCLB (Red Temp SMAW)
- [ ] Other (refer to attachment)

Applicable Customer Specs
TOOLS & TUBE SPOOL PIECES (SOUR LINE) (WELD) MATERIAL**

WORKING PRESSURES ARE DESIGN PRESSURES NOT TEST ITEM - MATERIAL

	N1	N2	N3	N4	N5	N6	N7	N8
Style	108	108	--	--	--	--	--	--
Size (inches)	1	1	--	--	--	--	--	--
Schedules			--	--	--	--	--	--
Rating	3000	3000	--	--	--	--	--	--
Orientation	0	0	0	0	0	0	0	0
Material	A105	A105	--	--	--	--	--	--

Rev	Description	By	Date
0	Issued for Construction	[illegible]	Aug 12, 2013

Customer Approval

Signature:

Canalta

AGA Meter Tube Inspection Report

SERIAL NUMBER: D140012

TAG NUMBER

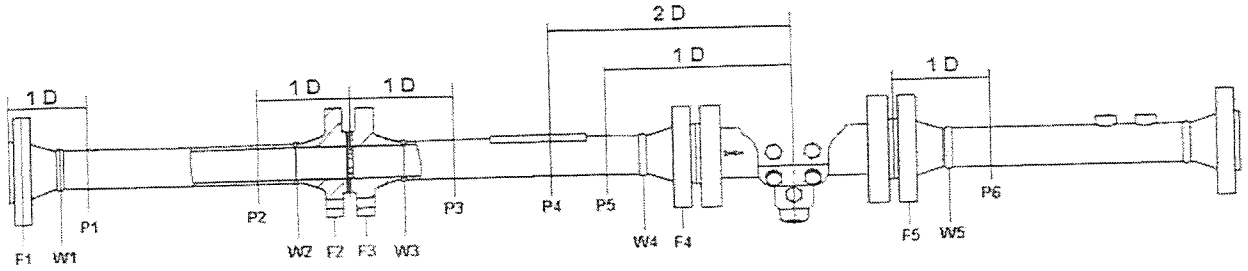

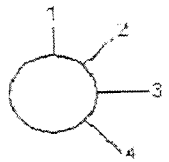

From Flow Direction

PLEASE NOTE:
This drawing may not accurately represent the model ordered, it is intended as a reference of the spots checked for bore diameters only. Not all points may be applicable.

PLANE	UPSTREAM POINTS												
	F1	W1	P1	P2	W2	F2	F3	W3	P3	P4	P5	W4	F4
1	13.125	13.091	13.106	13.110	13.095	13.122	13.124	13.117	13.110	13.107	13.107	13.104	
2	13.125	13.092	13.105	13.109	13.097	13.124	13.126	13.119	13.121	13.114	13.114	13.116	
3	13.125	13.091	13.109	13.111	13.091	13.127	13.126	13.111	13.113	13.115	13.115	13.119	
4	13.125	13.107	13.111	13.116	13.095	13.126	13.125	13.120	13.125	13.112	13.112	13.108	
AVERAGE	13.125	13.093	13.108	13.112	13.097	13.125	13.125	13.117	13.117	13.112	13.112	13.112	
TEMP.	70.2	69.7	70.1	70.5	71.1	71.0	71.1	71.3	71.4	70.1	70.4	71.1	
ROUGHNESS													

PLANE	DOWNSTREAM POINTS		
	F5	W5	P6
1	13.114	13.098	13.101
2	13.112	13.092	13.106
3	13.112	13.119	13.104
4	13.114	13.122	13.100
AVERAGE	13.113	13.108	13.108
TEMP.	759	762	771
ROUGHNESS			

METER TUBE LENGTHS:

Overall Length 285 7/8 U/S Length 174 1/4 D/S Length 112"

Plate To Conditioner / Vanes 106 1/4 Plate to First D/S Outlet 99 7/8

ROUNDNESS CHECK:

Dm From Fitting Inspection Sheet = 13.124

0.0025 x Dm = 0.033 =U

0.005 x Dm = 0.066 =V

Dm + U = 13.157 =W

Dm - U = 13.091 =X

Dm + V = 13.190 =Y

Dm - V = 13.058 =Z

Largest Number within 1D Upstream of Orifice Plate 13.125 (MUST BE SMALLER THAN W)

Smallest Number within 1D Upstream of Orifice Plate 13.124 (MUST BE BIGGER THAN X)

Largest Upstream Measurement (Including Fitting) 13.126

MINUS

Smallest Upstream Measurement (Including Fitting) 13.091

= 0.045 (MUST BE LESS THAN V)

Largest Downstream Measurement 13.122 (MUST BE SMALLER THAN Y)

Smallest Downstream Measurement 13.092 (MUST BE BIGGER THAN Z)

INSPECTOR: [signature] DATE: 10/19/13

Canalta

TOP HOUSING INSPECTION

HEAT NUMBER 2135H

SERIAL NUMBER T140004

- EQ AND GREASE PORT DRILLED ☑
- SEAL BAR SURFACE PASSES (ROUGHNESS AND NO POROSITIES) ☑
- ALL THREAD SIZES AND FINISH PASSES ☑
- BOLT UP FLANGE PASSES (ROUGHNESS AND NO POROSITIES) ☑
- CLEARANCE ON TOP OF FLANGE FOR NUTS ☑
- PINION SEAL SURFACES PASS (ROUGHNESS AND NO POROSITIES) ☑

T-SLOT WIDTH: 2.020

FLANGE THICKNESS: 1.941

INSPECTOR: _____ DATE: _____

	FLOW LINK SYSTEMS (P) LTD FOUNDRY UNIT-II 65/2-A,B & C, PUDUPALAYAM B.P.O. AVINASHI TK, COIMBATORE - 641 654 INDIA.	**TEST CERTIFICATE** **(EN 10204-3.1)**	TC NO : I-3460 DATE : 13.08.11

CUSTOMER **CANALTA CONTROLS LTD.** **6759 - 65 AVENUE, BAY #1,** RED DEER, ALBERTA, T4P 1X5, CANADA.	SPECIFICATION REFERENCE **1. ASTM A216-08 Gr.WCB** **2. NACE MR 0175**	MELT NO / DATE OF POURING **1269J / 19.05.11** FOUNDRY MARK **FLS**

PURCHASE ORDER NO **Tag No. - PO002195**	ORDER ACCEPTANCE NO **11-0093-A3**

CHEMICAL COMPOSITION %

SPECIFICATION	C	Si	S	P	Mn	Ni	Cr	Mo	V	Cu	Al	*RE
Minimum	--	--	--	--	--	--	--	--	--	--	--	--
Maximum	0.30	0.60	0.045	0.04	1.00	0.50	0.50	0.20	0.03	0.30	--	1.00
Achieved	0.213	0.36	0.010	0.019	0.95	0.04	0.05	0.009	0.003	0.02	--	0.12

HEAT TREATMENT NORMALIZED: Temperature raised to 920°C, Soaked for 4 hours and then air-cooled.

MECHANICAL PROPERTIES

SPECIFICATION	Y.S. (ksi)	UTS (ksi)	%ELONG. in 50mm (4d) / in 50mm (5d)	% RED. IN AREA	NOTCH TOUGHNESS (at °C) J		BEND TEST		HARDNESS (HB)
					Values	Avg.	ANGLE	D	
Minimum	36	70	22	35	--	--	--	--	--
Maximum	--	95	--	--	--	--	--	--	237
Achieved	49.1	77.7	36.3	64.7	--	--	--	--	153

DETAIL OF CASTINGS

S.NO.	DESCRIPTION	DRAWING NO / REV.	PART NO	POURED QTY
1	14" MODEL DC BODY	14XXDC04.DWG/0	--	2
2	14" MODEL DC TOP HOUSING	1460DC14/0	--	2

REMARKS

1. The above stated **ksi** values have been calculated based on original tested **N/MM²** values
2. *RE = Ni + Cr +Mo+ V + Cu

CERTIFIED THAT

1. THE ABOVE GIVEN DETAILS ARE CORRECT
2. THE MATERIAL CONFORMS TO ABOVE SPECIFICATION.
3. THE MATERIAL IS FREE OF CONTAMINATION FROM RADIOACTIVE ELEMENT OR RADIATION

THE PARTS WERE MANUFACTURED/TESTED IN ACCORDANCE WITH THE ABOVE SPECIFICATION AND CERTIFIED IN ACCORDANCE WITH EN 10204-3.1

Prepared by	Checked by	
M.RANJITH KUMAR	A.RAKKIYANNAN	A.RAJENDRAN ASSISTANT MANAGER -QUALITY MANUFACTURER'S AUTHORIZED INSPECTOR

QS 12 F Rev 5

	FLOW LINK SYSTEMS (P) LTD FOUNDRY UNIT-II 65/2-A,B & C, PUDUPALAYAM B.P.O AVINASHI-TK, COIMBATORE - 641 654 INDIA.	**TEST CERTIFICATE** (EN 10204-3.1)	TC NO : H-4432 DATE : 25.12.10

CUSTOMER	SPECIFICATION REFERENCE	MELT NO / DATE OF POURING
CANALTA CONTROLS LTD. 6759 - 65 AVENUE, BAY #1, RED DEER, ALBERTA, T4P 1X5, CANADA.	1. ASTM A216-08 Gr.WCB 2. NACE MR 0175	2135H / 21.09.10 FOUNDRY MARK FLS

PURCHASE ORDER NO	ORDER ACCEPTANCE NO
Tag No. - 15535	10-520-A1

CHEMICAL COMPOSITION %

SPECIFICATION	C	Si	S	P	Mn	Ni	Cr	Mo	V	Cu	Al	*RE
Minimum	--	--	--	--	--	--	--	--	--	--	--	--
Maximum	0.30	0.60	0.045	0.04	1.00	0.50	0.50	0.20	0.03	0.30	--	1.00
Achieved	0.216	0.40	0.007	0.023	0.93	0.11	0.06	0.011	0.003	0.02	--	0.20

HEAT TREATMENT : NORMALIZED: Temperature raised to 920°C, Soaked for 3 hours and then air-cooled.

MECHANICAL PROPERTIES

SPECIFICATION	Y.S. (ksi)	UTS (ksi)	%ELONG. in 50mm (4d) / in 50mm (5d)	% RED. IN AREA	NOTCH TOUGHNESS (at °C) J		BEND TEST		HARDNESS
					Values	Avg.	ANGLE	D	(HB)
Minimum	36	70	22	35	--	--	--	--	--
Maximum	--	95	--	--	--	--	--	--	237
Achieved	42.9	72.4	36.2	66.0	--	--	--	--	143

DETAIL OF CASTINGS

S.NO.	DESCRIPTION	DRAWING NO / REV.	PART NO	POURED QTY
1	14" MODEL DC TOP HOUSING	1460DC14/0	--	3
2	10" MODEL DC TOP HOUSING	1060DC14/8	--	3

REMARKS

1. The above stated **ksi** values have been calculated based on existing stated N/MM² values
2. *RE : Ce + Co + Mo + V + Cu

CERTIFIED THAT

1. THE ABOVE GIVEN DETAILS ARE CORRECT
2. THE MATERIAL CONFORMS TO ABOVE SPECIFICATION
3. THE MATERIAL IS FREE OF CONTAMINATION FROM RADIOACTIVE ELEMENT OR RADIATION

THE PARTS WERE MANUFACTURED, TESTED IN ACCORDANCE WITH THE ABOVE SPECIFICATION AND CERTIFIED IN ACCORDANCE WITH EN 10204-3.1

Prepared by	Checked by	
M.RANJITH KUMAR	A.RAKKIYANNAN	A.RAJENDRAN ASSISTANT MANAGER -QUALITY MANUFACTURER'S AUTHORIZED INSPECTOR

R & R Stress Relieving Service Ltd.

Nisku: 2103 - 6th Street, T9E 7X8 Tel: (780) 955-7559 Fax: (780) 955-2903
Blackfalds: #13 Burbank Industrial Park Tel: (403) 885-2280 Fax: (403) 885-0177
Toll Free: 1-800-499-HEAT(4328)

CERTIFICATE OF CONFORMANCE OF RECORDING INSTRUMENTS

CERTIFIED BY:	R & R Stress Relieving Service Ltd.
TEST NUMBER:	RR0813
DATE:	August 8, 2013
DATE DUE:	November 8, 2013
INSTRUMENT MFG:	Chino
MODEL NUMBER:	AH-3725 N00
SERIAL NUMBER:	AH-059C172
RECORDER NUMBER:	IR-182

This instrument has been calibrated and it is within the manufacturers specifications.

REFERENCE STANDARDS

DIGI MITE 311600 S/N48430-5522 CERT DATE Oct 22/12

The calibration of all standards and measuring instruments used in the calibration are traceable to the National Research Council of Canada in Ottawa or to the National Bureau of Standards in Washington, D.C.

Shane Stimson

CHECKED OCT 2 3 2013

Heat Treatment Instructions

P.O:	10445	CUSTOMER :	Canalta Controls Ltd.
DESCRIPTION:	Canalta Meter Tubes. *Note: Please add Protech to all Threads.		
DATE:	OCTOBER / 22 / 2013	Contractor:	R+R Stress Relieving

COMPONENT DESCRIPTION:

DWG. NO. AND LINE NO.	DIAMETER	THICKNESS	MATERIAL	LENGTH	WEIGHT
6 BLUE PROCESS, RP#6451#1, 1430#FDC40, D140012, T140004, (4 Piece)	14	0.438 & 1.5	WCB	286"	Approx. 13,106 Lbs
CB ENGINEERING, RP#6497#1, 860#FB0, P008, (3 Piece)	8.625	0.5	A333 / A350	200"	Approx. 12,175 Lbs

Temperature to be raised from (800°F)(427°C) to (1150°F)(621°C) at a maximum rate of **(266°F) (130°C)** Per Hour.

NOTE: MUST NOT EXCEED (400 °F) (204 °C) Per Hour.

Calculated rate = 400 degrees F/hr. (204 °C / hr.) Divided by governing metal thickness.

Temperature to be held at 1150°F (621°C) Plus or minus 25°F (14°C) For **(90)** minutes: 1 hr for items < 1" thick;

1hr + 15min per 1/4" in excess of 1" for items 1"- 2" thick; 2hrs + 15min/inch in excess of 2" (Refer to table for thickness)

Temperature to be lowered from (1150°F)(621°C) to (800°F)(427°C) at a maximum rate of **(333°F)(167°C)** Per Hour.

NOTE : MUST NOT EXCEED **(333°F)(167 °C)** Per Hour.

Calculated rate = **333°F** / hr. **(167°C** / hr.) Divided by governing metal thickness.

Additional requirements:

- **Job number and description required on heat treatment charts along with the operator's signature & date.**
- **Reporting of thermocouple attachment method and location, and verification of furnace thermocouple calibration is required.**
- **A sufficient number of thermocouples shall be located to control and maintain uniform distribution of temperature on all vessels and parts. Thermocouples shall be directly attached to the item or provision shall be made for thermocouple placement at bottom, centre and top of the furnace charge in accordance with the ASME Code.**
- **If Capacitator discharge welding is used to attach thermocouples an ASME Section IX welding procedure is required (WPS qualification is not required), and the energy output must be limited to 125 Watt-Seconds. No other welding is permitted on vessels or parts. [0.5 X Capacitance in farads X Voltage² = W-Sec.]**

Thermocouple Attachment Method : CAPACITOR DISCHARGE

Furnace Heat Number : B F 3 2 - 1 3 - 6 2 8 Location(s) TC's placed on meter runs at front and back

Furnace Operator Signature : [signature] Date : October 22, 2013

Q.C. Inspector Signature: [signature] Date : CHECKED OCT 2 3 2013

- 90 min Soak

- 60 min Soak

- Cont. Soak

Same failure 55

- Start Soak

Date: October 22, 2013

°F TCs: 2

Recorder: IR-182

Client: Canada Controls Ltd.

Job: PO #

Operator: Mitch Coumont

Chart Speed: 50mm/hr

Chart #: BE42-13-628

Description:

(1) 5 BLUE PROCESS RP#6451-1, 1430REDC40, D140012, T140001

(2) CB ENGINEERING RP#6497-1, 860RF80, P008.

CHECKED OCT 23 2013

P.O 100098

THREADOLET 1 INCH 2X36 3000 A105

MILL TEST & INSPECTION CERTIFICATE

ACCORDING TO EN 10204 :2004 3.1

柏緯鐵工股份有限公司
BOTH-WELL STEEL FITTINGS CO., LTD.
NO.303, REN-SIN ROAD, REN-WU DISTRICT, KAOHSIUNG CITY, TAIWAN R.O.C.(81460)
TEL: +886-7-3711536, 3710497, 3720260 FAX: +886-7-3713864, 3713882
Web site: http://www.bothwell.com.tw e-mail: box@bothwell.com.tw

CUSTOMER : SEYBOLD INTERNATIONAL CORP.
CERT. NO : 131905 L/C NO :
ORDER NO : 7006598 DATE : 04/30/2013
INVOICE NO : BW013102011101 PAGE : 2 ORIGIN : TAIWAN

ITEM	BW HT. NO.	RAW MATERIAL HEAT NO.	DESCRIPTION	QUANTITY	SPECIFICATION FOR MATERIAL	SPECIFICATION FOR FITTING	INSPECTION SURFACE	INSPECTION DIM.
096	3999	351978	OUTLET STRAIGHT-WAY 3/4"X1"-36" 3000# NPT	400 PC	ASTM A105N -11	ASME SB-687 - 2005	GOOD	GOOD
098	3478	319983	OUTLET STRAIGHT-WAY 1"X2"-36" 3000# S/W	350 PC				
100	3478	319983	OUTLET STRAIGHT-WAY 1"X2"-36" 3000# NPT	500 PC				
101	3774	327262	OUTLET REDUCING-WAY 1"NPLAT 3000# NPT	25 PC				
102	3744	326705	OUTLET STRAIGHT-WAY 1-1/2"X2"-36" 3000# S/W	99 PC				

ITEM	BW HT. NO.	CHEMICAL COMPOSITION (%) C	Si	Mn	P	S	Cu	Cr	Ni	Mo	V	Cb(Nb)	N	Al	Ti	Zr	CE	MATERIAL SUPPLIER
Min		-	0.10	0.60	-	-	-	-	-	-	-	-	-				-	
Max		0.35	0.35	1.05	0.035	0.040	0.40	0.30	0.40	0.12	0.08	-	-				0.47	
096	3999	0.20	0.21	0.84	0.013	0.007	0.19	0.07	0.03	0.01	0.002	0.001	-				0.392	
098	3478	0.210	0.220	0.850	0.020	0.008	0.230	0.110	0.070	0.020	0.002	0.001	-				0.396	
100	3478	0.210	0.220	0.850	0.020	0.008	0.230	0.110	0.070	0.020	0.002	0.001	-				0.396	
101	3774	0.200	0.209	0.839	0.016	0.010	0.180	0.009	0.050	0.010	0.002	0.001	-				0.359	
102	3744	0.180	0.208	0.840	0.019	0.009	0.140	0.090	0.050	0.020	0.002	0.001	-				0.355	

ITEM	BW HT. NO.	MECHANICAL PROPERTIES T. S. (KSI)	T. S. (KG)	EL. (%)	R of A (%)	Hardness (HBW)(AVG)	Charpy Impact F / 0 °C (Joule) MIN /AVG. 1	2	3	AVG.	HEAT TREATMENT
Min		70	36	22	30	-					NORMALIZED
Max		-	-	-	-	187					
096	3999	78.1	49.5	34.4	56.5	143 142					900℃ A.C.
098	3478	75.5	52.4	35.0	48.5	141 141					
100	3478	75.5	52.4	35.0	48.5	141 141					
101	3774	75.4	54.6	31.6	64.2	143 143					
102	3744	74.8	48.6	33.6	45.5	145 145					

ADDITIONAL TEST / REMARKS
STEEL MAKING PROCESS : ELECTRIC FURNACE
CONFORMS TO NACE MR0175-09 /MR0103-10
CONFORMS TO NACE ISO15156-3 2009

WE HEREBY CERTIFY, THAT THE MATERIAL DESCRIBED ABOVE HAS BEEN TESTED AND COMPLIES WITH THE TERMS OF THE ORDER CONTRACT.

C.C. Huang
Q. C. MANAGER
CHEN CHI HUANG

Y.Y. Chang
INSPECTOR
YUAN YAO CHANG

BW-700335 REV: 2

Order#: 303006 Seq: 2 PO#: PO010098 Heat#: 3478 Mill: Both-Well
Part#: O 1 3M T 36X2 5 Part Desc: Olets 1 (33.4mm O.D.) 3000# (20.7MPA) THREADOLET 36X2 A/SA105N

PIPE 14 INCH SCH60 HF A106B

P.O 10041

ADD: JINTANG ROAD DONGLI
DISTRICT, TIANJIN, CHINA
TEL: 86-22-2480 1217
FAX: 86-22-2480 1291

TIANJIN PIPE (GROUP) CORPORATION
QUALITY CERTIFICATE

Licence No.:

No.: 12082222

Contract No: TPCO-123658
Order: Elamco Pipe & Supply Company
P.O. No.: Rite EL-8414 (TC8329)
Standard: CSA Z245.1-07/API SPEC 5L-2007/ASTM/ASME A/SA 106-2011

L/C No.:
Product: SEAMLESS STEEL LINE PIPE
Port of dest.:

O.D.-W.T: 14 IN *SCH60(355.60*15.09)
Steel grade: Cat I Gr 290 SS 0X42/Gr.B
Man. Method: HOT ROLLING SEAMLESS
Length range 40-44FT

Packing: IN LOOSE
Total pieces: 20
Total metres:
Total Tons: 34.204

Heat No.	Lot No.	Quantity: Pieces	Meters	Bundles	Tons	Delivery condition	Sample No.	Tensile test(MPa): T°	Tem. °C	Y.S.	Type	Y.S.	Elong.%	Shrink %	2nd T°	Tem. °C	Size	Impact test(J): A.K.1	Shear %	A.K.2	Shear %	A.K.3	Shear %	AVE	Shear %
123698	1301	20			34.204	As rolled	130-8-027	A	26	515	R0.5	360	48.0												

Total No. 34.204 Note: A-strip,Lo=58.1mm Lo=50mm

Heat No.	Lot No.	Sample No.	HV10	Hardness test (inside): 1	2	3	4	AVE	Hardness test (middle): 1	2	3	4	AVE	Hardness test (outside): 1	2	3	4	AVE	NDE	Fla. test(1)	Fla. test(2)
123698	1301	130-8-027		171.0	170.0	172.0	170.0	171.0	165.0	164.0	165.0	164.0	165.0	164.0	163.0	163.0	162.0	163.0	EMI/ET	G	G

Heat No.:
Steel spec.:

Chemical composition % (L: Ladle analysis P: Product analysis)

		C	Si	Mn	P	S	Ni	Cr	Mo	Cu	Al	V	Nb	Ti	B	Ca	N	H	O	CE(CSA)	CE(IIW)	Hydro. Test
123698	L	0.14	0.26	1.06	0.012	0.004	0.05	0.03	0.01	0.09	0.027	0.04	<0.01	<0.01	<0.0005	0.0025				0.32	0.34	3810PSI/65
123698	P	0.14	0.25	1.03	0.011	0.004	0.05	0.03	0.01	0.09	0.028	0.03	<0.01	<0.01	<0.0005	0.0019				0.32	0.33	
	P	0.14	0.26	1.04	0.011	0.004	0.05	0.03	0.01	0.09	0.029	0.04	<0.01	<0.01	<0.0005	0.0020				0.32	0.34	

NDE (100%)	Visual and Dimension	Hydro. Test	Pipe End NDT	Pipe End Beveling	Residual Mag. Test	SSCC	TPC
G	G	G	G	G	G		

We hereby state that all pipes are manufactured and inspected according to above standards and order.

No.: 12082163 Date: 2012-8-[illegible]

Page: 1/1

Next for certification

1. A/S.T.M SMR 0155-2010/NACE MR 0175-2009 ISO 15156-2:2009; 2. CE(CSA)=C+[Mn/6+(Cr+Mo+V)/5+(Ni+Cu)/15]; CE(IIW)=C+Mn/6+(Cr+Mo+V)/5+(Ni+Cu)/15; 3. ALL=KILLED STEEL; CAST=CONTINUOUS CAST; 4. SN=Sign; Size: S=SEAMLESS; W=E.R.W; E=Electric Resistance Welded; F=Flash Welded; S=Submerged Arc Welded; 5. *: Silicon and aluminum treated; 6. L: ...ustrie; Processing: C=cold; H=Heat Treatment; Steel Making: ...

Remark: Heat No.=Batch No.; Lot No.=Product Spec.+Inspection Mark+Sub-...; Package: B=Bundling; P=Packing; Tag=Weather...

Order#: 3015875 Seq#: 2 PO#: PO0100411 Heat#: 123698 MILL: TPCO
Part#: P 14 60 SGS H1 Part Desc: Pipe 14 (355.6mm O.D.) SCH 60 SMLS A/SA 106-B SRL HEAT LOT (TPCO)

PIPE 14 INCH SCH 60 HF A333

P 2 12091

Order#: 3015887 Seq: 3 PO#: PO010041 Heat#: 65089 Mill: Tubos de Acero de Mexico
Part#: P 14 60 S3 S B Part Desc: Pipe 14 (355.6mm O.D.) SCH 60 SMLS A/SA333-6 SRL BEVELLED END (55/W)

Tenaris

INSPECTION CERTIFICATE 3.1
CERTIFICADO DE INSPECCIÓN 3.1
EN 10204 3.1: 2004

Number / Número	Page / Pagina
13036252	1 / 7

Date / Dia: May 31, 2013

Tenaris Algoma Steel S.A.
Tenaris Tamsa
Tenaris Tubos Sin Costura
P.O. Box 1450
Sault Ste Marie, Ontario
P6A 5N1 Canada

Customer / Cliente: COMCO PIPE & SUPPLY CO.	Customer's Order Item / Orden Cliente - Item: E1-4027 ITEM 10	Customer's Reference / Ref. del Cliente: N/A	Manufacturer's Order Number / Orden de Venta: 196988/10
Manufacturing Process / Proceso de Manufactura: SEAMLESS HOT ROLLED LAMINADO EN CALIENTE SIN COSTURA	Product Type / Tipo de Producto: LINE PIPE SEAMLESS CONDUCCION SIN COSTURA		Surface / Superficie: VARNISHED BARNIZADO
Standard or Specification / Normas o Especificaciones: ASTM A333/11		Steel Grade / Grado de acero: GR 1/6	Ends / Extremos: NORMAL BEVEL BISELADO NORMAL
Dimensions / Dimensiones: 14.000 X 0.094 INCH 355.6 X 15.1 MM	Schedule / Cedula: S60	Length / Longitud: 37.99 / 44.00 FT 11.58 / 13.41 MTS	Quantity / Cantidad: 6 Pcs/Pz: 255.840 FT 21888.534 LB 77.980 MTS 9923.000 KG	Nominal Weight / Peso Nominal: 85.13 LB/FT 126.72 KG/M

TENSILE TEST / ENSAYO DE TENSION

Heat N° / Colada N°	Sample N° / Muestra N°	Zone / Zona	Pipe N° / Tubo N°	Specimen condition / Condicion de la probeta: Ax	Se	Type / Tipo	Ori	Specimen dimensions / Dimensiones de la probeta: Size / Tamaño	Area / Area Seccion	Test temp / Temp. ensayo °F	Y.S. 0.5% Extn.	U.T.S.	Y.S./U.T.S.	Elongation / Alargamiento: Lo	Min	Obt
								mm	mm2	°F	psi	psi		in	%	%
A5268	80119	B1	19962	B	AX	38	L	38.52 X 16.20	583.65	R.T.	56 349	71 798	0.81	2	25.0	50.0

Ax: As manufactured / Según proceso de fabricación
B: Body / Cuerpo
E1 / E2: Ends of Sampling / Extremos de muestra
L: Longitudinal / Longitudinal
Lo: Initial length / Longitud inicial
Ls: Location of sample / Ubicación de la muestra
Max: Maximum / Máximo
Min: Minimum / Mínimo
Obt: Obtained / Obtenido
Ori: Orientation / Orientación
Req. Max: Required maximum / Máximo requerido
Req: Required / Requerido
RT: Room temperature / Temperatura ambiente
Se: Specimen condition / Condición de la probeta
Ss: Strip specimen / Muestra rectangular
U.T.S: Ultimate tensile strength / Resistencia
Y.S: Yield strength / Fluencia

CHEMICAL COMPOSITION / COMPOSICION QUIMICA

Heat N° / Colada N°	Sample N° / Muestra N°		C	Mn	Si	Mo	Cr	S	P	V	Nb	Al	Cu	Sn	Ni	Ti	As	B	Ca	N	Le	Le'	Ceq 1	Ceq 2
			%	%	%	%	%	%	%	%	%	%	%	%	%	%	%	%	%	%	%	%	%	%
		R Max	0.25	1.35	0.50	0.12	-	0.025	0.025	0.09	0.110	0.060	-	-	-	0.100	-	0.0010	-	-	0.43	0.40	-	0.50
		Min	-	0.40	0.10	-	-	-	-	-	-	-	-	-	-	-	-	-	-	-	-	-	0.350	-
		R Max	0.25	1.35	0.50	0.12	-	0.025	0.025	0.09	0.110	0.060	-	-	-	0.100	-	0.0010	-	-	0.43	0.40	-	0.50
		Min	-	0.40	0.10	-	-	-	-	-	-	-	-	-	-	-	-	-	-	-	-	-	0.350	-
65089	80077	R	0.21	0.97	0.25	0.03	0.03	0.005	0.009	0.002	0.002	0.035	0.03	0.01	0.02	0.002	0.01	0.0001	0.0001	0.0001	0.25	0.18	0.387	0.41

This certificate is issued on the express understanding that it is for the use of the original consignee only. It is not transferable and is void in respect of any subsequent sale. Any alteration, erasure or modification renders this certificate invalid. Tenaris will not be responsible for any damage caused by the use of this certificate by any party other than the original consignee.

Este certificado se emite en el entendido de que es para uso exclusivo del consignatario original. No es transferible y es nulo con respecto a cualquier venta posterior. Cualquier alteración, borradura o modificación invalida este certificado. Tenaris no será responsable por daños causados por el uso de este certificado por cualquier parte que no sea el consignatario original.

Order#: 301587 / Seq: 3 PO#: PO0100411 Heat#: 65089 Mill: Tubos de Acero de Mexico
Part#: P 14.00 S3.5 B Part Desc: Pipe 14 (355.6mm O.D.) SCH 60 SMLS A/SA333 6 SRL BEVELLED END (355MM)

Tenaris

INSPECTION CERTIFICATE 3.1
CERTIFICADO DE INSPECCIÓN 3.1
EN 10204 3.1 2004

Number / Número: 13036252 | Page / Página: 2 / 7

Date / Día: May 31, 2013

Tubos de Acero de Mexico, S.A.
Av. Universidad 990 Col. Del Valle
Garza Garcia, Nuevo Leon, Mexico
C.P. 66220 Apdo. 307 Suc. "A"
Tel. 52 81 8865 4100
Fax 52 81 8865 4122
CONTACTO: ROY PRESTON

Customer / Cliente: COMCO PIPE & SUPPLY CO.	Customer's Order Item / Orden Cliente / Item: E1-4027 ITEM 16	Customer's Reference / Ref. del Cliente: N/A	Manufacturer's Works Order N° / Pedido Fabricación de Tenaris: 965989/10
Manufacturing Process / Proceso de Manufactura: SEAMLESS HOT ROLLED / LAMINADO EN CALIENTE SIN COSTURA	Product Type / Tipo de Producto: LINE PIPE SEAMLESS / CONDUCCION SIN COSTURA		Surface / Superficie: VARNISHED / BARNIZADO
Standard or Specification / Normas o Especificaciones: ASTM A333.11		Steel Grade / Grado de acero: GR.1/6	Ends / Extremos: NORMAL BEVEL / BISELADO NORMAL
Dimensions / Dimensiones: 14.000 X 0.594 INCH / 355.6 X 15.1 MM	Schedule / Cedula: 300	Length / Longitud: 37.99 / 44.00 FT / 11.58 / 13.41 MTS	Quantity / Cantidad: 6 Pcs/Pz: 255.840 FT 21888.634 LB / 77.980 MTS 9933.000 KG	Nominal Weight / Peso Nominal: 85.13 LB/FT / 126.72 KG/M

CHEMICAL COMPOSITION / COMPOSICION QUIMICA

Composition % / Composición %

Heat N° / Colada N°	Sample N° / Muestra N°		C	Mn	Si	Mo	Cr	P	S	V	Nb	Ni	Cu	Sn	Al	Ti	Ca	B	Co	N	Ce	Ceq 1	Ceq 2	Ceq 3
		H Max	.25	1.35	.50	.12	–	.25	.25	.09	.110	.400	–	–	–	.110	–	.10	–	–	.43	.43	–	.700
		H Min	–	.40	.10	–	–	–	–	–	–	–	–	–	–	–	–	–	–	–	–	–	.390	–
		P Max	.25	1.35	.50	.12	–	.25	.25	.09	.110	.400	–	–	–	.110	–	.10	–	–	.47	.48	–	.700
		P Min	–	.40	.10	–	–	–	–	–	–	–	–	–	–	–	–	–	–	–	–	–	.390	–
65089	601115	P	.1	.76	.25	.2	.1	.0	.005	.08	.0	.07	.130	.10	.02	.02	.0	.0	.12	.04	.24	.4	.660	.671
65089	601115	P	.1	.76	.25	.2	.1	.0	.007	.09	.0	.09	.129	.10	.01	.03	.0	.0	.17	.04	.24	.4	.660	.662

Ceq = Carbon equivalent/Carbono equivalente — Ceq 1: REL.NIAC — Max: Maximum / Máximo

Ceq 2: Carbon equivalent/Canadian/Carbono equivalente/Canadiense — Ceq 2: SLRAS Mn+Cr+Mo+Cu+V — Min: Minimum / Mínimo

H: Heat / Colada — P: Product / Producto

THROUGH WALL HARDNESS / DUREZA EN EL ESPESOR

Required values / Valores requeridos			Individual / Individuales Min: – Max: 22.0 Var: –			Average / Promedio Min: – Max: – Var: –			Hardness type/Tipo de dureza =HR															
Heat N° / Colada N°	Sample N° / Muestra N°	Zone / Zona	Pipe N° / Tubo N°	Specimen condition / Condición de la probeta					Code	Scale / Escala	OD				MW				ID				Var.
				Ls		Sc		AM			1	2	3	Avg	1	2	3	Avg	1	2	3	Avg	
65089	601115	S1	10954	S		AM			–	HRBW	79.4	79.2	79.6	79.3	77.1	78.3	78.6	78.0	76.1	76.1	76.3	76.8	4.2

ASM: As manufactured / Según proceso de fabricación — ID: Internal diameter / Diámetro interior — MW: Middle wall / Centro — Var: Variation / Variación

This certificate is supplied as a complete and correct record of the data and test results contained in the original certificate and relevant to the order and item specified. Its issue has been authorized by the responsible person(s) designated by the quality system. Any alteration, erasure, falsification or omission of the data contained in this certificate may be prosecuted to the fullest extent of the law.

Este certificado se emite únicamente como copia completa y exacta de los datos y resultados de ensayo contenidos en el certificado original y relevantes para el pedido y artículo especificados. Su emisión ha sido autorizada por la(s) persona(s) designada(s) por el sistema de calidad. Cualquier alteración, supresión, falsificación u omisión de los datos contenidos en este certificado podrá ser perseguida hasta el máximo rigor de la ley.

Order#: 301587 Seq: 3 PO#: PO010041 Heat#: 66089 Mill: Tubos de Acero de Mexico
Part#: 1" 14.60 S3 S B Part Desc: Pipe 14 (355.6mm O.D.) SCH 60 SMLS A/SA333-6 SRL BEVELLED LNG (594W)

Tenaris

INSPECTION CERTIFICATE 3.1
CERTIFICADO DE INSPECCIÓN 3.1
EN 10204 3.1: 2004

Number / Número	Page / Página
13036252	3 / 7

Date / Día: May 31, 2013

Customer / Cliente: COMDO PIPE & SUPPLY CO.	Customer's Order Item / Orden Cliente / Item: E1-4027 ITEM 10	Customer's Reference / Ref. del Cliente: N/A	Manufacturer's Works Order N° / Orden de Fabricación de Tenaris: 186889/10
Manufacturing Process / Proceso de Manufactura: SEAMLESS HOT ROLLED LAMINADO EN CALIENTE SIN COSTURA	Product Type / Tipo de Producto: LINE PIPE SEAMLESS CONDUCCION SIN COSTURA		Surface / Superficie: VARNISHED BARNIZADO
Standard or Specification / Norma / Especificación: ASTM A333/11		Steel Grade / Grado de acero: GR.1/6	Ends / Extremos: NORMAL BEVEL BISELADO NORMAL

Dimensions / Dimensiones	Schedule / Cédula	Length / Longitud	Quantity / Cantidad: 5 Pcs/Pz		Nominal Weight / Peso Nominal
14.000 X 0.594 INCH	060	37.99 / 44.00 FT	255.840 FT	21328.534 LB	85.13 LB/FT
355.6 X 15.1 MM		11.58 / 13.41 MTS	77.980 MTS	9833.009 KG	126.72 KG/M

THROUGH WALL HARDNESS / DUREZA EN EL ESPESOR

Avg: Average / Promedio
B: Body / Cuerpo
E1 / E2: Ends of Barrolling / Extremos de Muestra
L: Location of sample / Ubicación de la muestra
Max: Maximum / Máximo
Min: Minimum / Mínimo
OD: Outside diameter / Diámetro exterior
Quad: Quadrant / Cuadrante
Sc: Specimen condition / Condición de la probeta

IMPACT TEST / ENSAYO DE IMPACTO

Type/Tipo: CHARPY V
Position/Posición: N/A
Orientation/Orientación: L
Temp: -45
Unit/Unidad: °C
Unit / Unidad: DJB
Ind Min Req: 18 Req Min Avg: 13
Shear area / Area dúctil %
Ind Min Req: -- Req Min Avg: --
Lateral Expansion/Expansión Lateral: mm
Ind Min Req: -- Req Min Avg: --

Heat N° / Colada N°	Sample N° / Muestra N°	Zone / Zona	Pipe N° / Tubo N°	L/B	S/C	T °C	Size / Tamaño mm	Results / Resultados				Results / Resultados				Results / Resultados			
								1	2	3	Avg.	1	2	3	Avg.	1	2	3	Avg.
66089	80116	E1	10002	B	AM	-45	10 x 10	237	186	252	226	108	120	100	109	2.6	2.5	2.5	2.5

AM: As manufactured / Según proceso de fabricación
Avg: Average / Promedio
B: Body / Cuerpo
E1 / E2: Ends of Barrolling / Extremos de Muestra
Ind. Min. Req: Individual Minimum Required / Requerido Mínimo Individual
Ind. Min. Req: Individual Minimum Required / Requerido Mínimo Individual
L: Longitudinal / Longitudinal
L: Location of sample / Ubicación de la muestra
Req. Min. Avg: Required minimum average / Promedio requerido
Sc: Specimen condition / Condición de la probeta
T °C: Test temperature / Temperatura de ensaye
Temp: Temperature / Temperatura

Type/Tipo: CHARPY V
Position/Posición: N/A
Orientation/Orientación: T
Temp: -45
Unit/Unidad: °C
Unit / Unidad: DJB
Ind Min Req: 28 Req Min Avg: --
Shear area / Area dúctil %
Ind Min Req: 60 Req Min Avg: 85
Lateral Expansion/Expansión Lateral: mm
Ind.Min.Req: -- Req Min Avg: --

Heat N° / Colada N°	Sample N° / Muestra N°	Zone / Zona	Pipe N° / Tubo N°	L/B	S/C	T °C	Size / Tamaño mm	Results / Resultados				Results / Resultados				Results / Resultados			
								1	2	3	Avg.	1	2	3	Avg.	1	2	3	Avg.
66089	80116	E1	10002	B	AM	-45	10 x 10	156	141	146	150	85	86	88	86	2.3	2.3	2.3	2.3

AM: As manufactured / Según proceso de fabricación
Ind. Min. Req: Individual Minimum Required / Requerido Mínimo Individual
L: Location of sample / Ubicación de la muestra
T °C: Test temperature / Temperatura de ensaye

This certificate is issued in a computerized system and is valid without electronic signature. Cert. No. is generated / Este certificado es emitido mediante un sistema computarizado y es válido sin firma electrónica. El número de certificado se genera
Este certificado se emite mediante un sistema computarizado y es válido sin firma electrónica. El certificado original deberá ser solicitado y confirmado por escrito
FORM 3.1

Tenaris

INSPECTION CERTIFICATE 3.1
CERTIFICADO DE INSPECCIÓN 3.1
EN 10204 3.1: 2004

Number / Número:	Page / Página:
13036252	4 / 7
Date / Día: May 31, 2013	

Tenaris de Acero de Mexico S.A.
Calzada Ruiz Cortines 455 Col. Obrera
Monterrey, Nuevo Leon, Mexico C.P. 64010
RFC TAM 960625 6P6
Tel. (52) 81 8865 4100
Fax (52) 81 8865 4199

Customer / Cliente: COMCO PIPE & SUPPLY CO.	Customer's Order Item / Orden Cliente / Item: E1-4027 / ITEM 10	Customer's Reference / Ref. del Cliente: N/A	Manufacturer's Works Order N° / Confirmación de Venta: 1959897-0
Manufacturing Process / Proceso de Manufactura: SEAMLESS HOT ROLLED LAMINADO EN CALIENTE SIN COSTURA	Product Type / Tipo de Producto: LINE PIPE SEAMLESS CONDUCCION SIN COSTURA		Surface / Superficie: VARNISHED BARNIZADO
Standard or Specification / Norma o Especificación: ASTM A333-11		Steel Grade / Grado de Acero: GR.1/6	Ends / Extremos: NORMAL BEVEL BISELADO NORMAL

Dimensions / Dimensiones	Schedule / Cedula	Length / Longitud	Quantity / Cantidad: 6 Pcs/Pz		Nominal Weight / Peso nominal
14.000 X 0.594 INCH 355.6 X 15.1 MM	060	37.69 / 44.58 FT 11.58 / 13.41 MTS	255.840 FT 77.980 MTS	21898.504 LB 9933.696 KG	85.13 LB/FT 126.72 KG/M

IMPACT TEST / ENSAYO DE IMPACTO

Avg. Average / Promedio	Required Minimum Individual	Req. Min. Avg. Required minimum average / Promedio	T. Transversal / Transversal
B: Body / Cuerpo	Ind. Req. Individual Minimum Required /	mínimo requerido	Temp. Temperature / Temperatura
E1 / E2: Ends of Sampling / Extremos de Muestra	Requerido / Valores individuales	Sin Specimen condition / Condición de la probeta	

FLATTENING TEST / ENSAYO DE APLASTAMIENTO

Standard / Norma				
Heat N° / Colada N°	Sample N° / Muestra N°	Pipe N° / Tubo N°	Zone / Zona	Result / Resultado
A5233	98116	10806	E2	Conf. / Bueno

E1 / E2: Ends of Sampling / Extremos de Muestra

HYDROSTATIC TEST / PRUEBA HIDRAULICA

Pressure / Presión		Time / Tiempo	Result / Resultado
Unit / Unidad	Value / Valor	Seconds / Segundos	
psi	4,000	5	Satisfactory / Satisfactorio

We certify that the above mentioned goods are in accordance with the requirements of the relevant purchase order. All the material certificates used in the manufacturing process of the goods listed above have been obtained from suppliers approved by our quality system. We hereby certify that the information contained in this document is true and accurate. We assume responsibility only for the analyses carried out and the tests performed by us. Any alteration and/or falsification made to this document will be subject to civil and criminal liability according to the law.

Este documento es copia fiel de un certificado original emitido por el fabricante. Su contenido refleja datos verificables. El firmante declara bajo su responsabilidad que los datos consignados en este documento son exactos. Cualquier falsificación o alteración de este documento será sometida a las acciones civiles y penales previstas en la ley.

FORM 3.1

Order#: 301587 / Spec: 3 PO#: PO0100041 Heat#: 660889 Mill: Tubos de Acero de Mexico
Part#: P 14.00 S3 S B Part Desc: Pipe 14 (355.6mm O.D.) SCH 60 SMLS A/SA333 6 SRL BE VE LLD 1 ND (594W)

Order#: 301587 Seq: 3 PO#: PO0100411 Heat#: 65089 Mill: Tubos de Acero de Mexico
Part#: P 14.60 S3 S B Part Desc: Pipe 14 (355.6mm O.D.) SCH 60 SMLS A/SA333 6 SRL BEVEL LENG (.594W)

Tenaris

INSPECTION CERTIFICATE 3.1
CERTIFICADO DE INSPECCIÓN 3.1
EN 10204 3.1: 2004

Number / Número	Page / Página
13036252	5 / 7
Date / Día: May 31, 2013	

Customer / Cliente: COMCO PIPE & SUPPLY CO.	Customer's Order Item / Orden Cliente - Item: B1-4027 ITEM 10	Customer's Reference / Ref. del Cliente: N/A	Manufacturer's Works Order N° / Confirmación de Venta: 1965833

Manufacturing Process / Proceso de Manufactura	Product Type / Tipo de Producto	Surface / Superficie
SEAMLESS HOT ROLLED LAMINADO EN CALIENTE SIN COSTURA	LINE PIPE SEAMLESS CONDUCCION SIN COSTURA	VARNISHED BARNIZADO

Standard or Specification / Norma o Especificación	Steel Grade / Grado de Acero	Ends / Extremo
ASTM A333/11	GR.1/6	NORMAL BEVEL BISELADO NORMAL

Dimensions / Dimensiones	Schedule / Cédula	Length / Longitud	Quantity / Cantidad & Pcs/Pz		Nominal Weight / Peso Nominal
14.000 X 0.594 INCH 355.6 X 15.1 MM	060	37.95 / 44.00 FT 11.58 / 13.41 MTS	256.840 FT 77.980 MTS	21686.534 LB 9833.690 KG	85.12 LB/FT 126.72 KG/M

HEAT TREATMENT / TRATAMIENTO TERMICO

Heat treatment / Tratamiento Térmico: Pipe / Tubo
Quench media of heat treatment process / Medio de enfriamiento del tratamiento térmico: Water / Agua
Temperature Scale / Escala de Temperatura: °C

Type Tipo	Temperature Temperatura	Temperature Temperatura (Minutes)
Quenched / Templado	877	55
Tempered / Revenido	602	79

SUPPLEMENTARY INFORMATION / INFORMACION SUPLEMENTARIA

Supplementary Information Información Suplementaria	
Manufactured by Tenaris Tamsa:	Fabricado por Tenaris Tamsa:
Steel making process:	Fabricación del acero:
Electric Arc Furnace+Ladle Furnace+Continuous Casting Machine	Horno de Arco Eléctrico+Horno de Alimentación+Máquina de Colada Continua
Pipe Mill's Size:	Acero elaborado en: Monterrey
Material has been Melted and Manufactured in the USA:	Material fue elaborado y manufacturado en EE.UU.:
Non-destructive testing:	No ensayado por soldadura
Heat Identification (per Specification):	Colada o Identificación (Especificación):
Inspection method:	Método de Inspección:
EMI - FLUX - MPI	EMI - FLUX - MPI
AT NOMINAL 5.0, LONG TRANSV & TOTAL LONGITUDINAL SATISFACTORY	AT NOMINAL 5.0, LONG TRANSV & TOTAL LONGITUDINAL SATISFACTORIO
MATERIAL IN ACCORDANCE TO NACE MR0175-2003	MATERIAL DE ACUERDO A NACE MR0175-2003
MATERIAL IN ACCORDANCE TO NACE MR0103-2003	MATERIAL DE ACUERDO A NACE MR0103-2003

This certificate is issued by a company that complies with International Standard ISO/IEC 17021:2006. Our management system is certified by LRQA according to ISO 9001:2008 and ISO 14001:2004. Tenaris is a global manufacturer and supplier of seamless and welded steel pipe and related services for the energy industry and other industrial applications. Our management system is certified by LRQA according to ISO 9001:2008 and ISO 14001:2004. Any alteration to this certificate will be subject to the law.

Este certificado es emitido por una compañía que cumple con la Norma Internacional ISO/IEC 17021:2006. Nuestro sistema de gestión está certificado por LRQA según ISO 9001:2008 e ISO 14001:2004. Tenaris es un fabricante y proveedor global de tubos de acero sin costura y soldados y servicios relacionados para la industria energética y otras aplicaciones industriales. Nuestro sistema de gestión está certificado por LRQA según ISO 9001:2008 e ISO 14001:2004. Cualquier alteración de este certificado estará sujeta a la ley.

Order#: 301587 Seq: 3 PO#: PO010041 Heat#: 650859 Mill: Tubos de Acero de Mexico
Part#: P 14.60 S3 S R Part Desc: Pipe 14 (355.6mm O.D.) SCH 60 SMLS A/SA333 Gr 6 SRL BEVELLED END (5.04W)

INSPECTION CERTIFICATE 3.1
CERTIFICADO DE INSPECCIÓN 3.1
EN 10204 3.1: 2004

Number / Número	Page / Página
13036252	6 / 7
Date / Día: May 31, 2013	

Tubos de Acero de Mexico, S.A.
Calle Valentín Gómez Farías 90 Ote.
Zona Industrial de Tamps. Apartado Postal
C.P. 89349 Altamira
Tel. (52) 833 260 4100
Fax (52) 833 260 4001

Customer / Cliente: COMCO PIPE & SUPPLY CO.	Customer's Order Item / Orden Cliente - Item: E1-4027 ITEM: 10	Customer's Reference / Ref. del Cliente: N/A	Manufacturer's Works Order N° / Confirmación de Venta: 1965687 0
Manufacturing Process / Proceso de Manufactura: SEAMLESS HOT ROLLED / LAMINADO EN CALIENTE SIN COSTURA	Product Type / Tipo de Producto: LINE PIPE SEAMLESS / CONDUCCION SIN COSTURA		Surface / Superficie: VARNISHED / BARNIZADO
Standard or Specification / Normas / Especificaciones: ASTM A333,11	Steel Grade / Grado de acero: GR.1/6		Ends / Extremos: NORMAL BEVEL / BISELADO NORMAL

Dimensions / Dimensiones	Schedule / Cédula	Length / Longitud	Quantity / Cantidad: 6 Pcs/Pz		Nominal Weight / Peso Nominal
14.000 X 0.594 INCH	060	57.99 / 44.00 FT	255,840 FT	21698.534 LB	85.10 LB/FT
355.6 X 15.1 MM		11.58 / 13.41 MTS	77.980 MTS	9932.000 KG	126.72 KG/M

SUPPLEMENTARY INFORMATION / INFORMACION SUPLEMENTARIA

Supplementary Information / Información Suplementaria	
REL MAT. DATE:	REL MAT. DATE:
SUPP. Mo+Cr+Ni+Cu+V MAX.:	SUPP. Mo+Cr+Ni+Cu+V MAX.:
CERTIFICATE ACCORDING TO EN 10204 3.1: 2004	CERTIFICADO DE ACUERDO A EN 10204 3.1: 2004
TRACE NUMBER: SO 31070824 ITEM 100	TRACE NUMBER: SO 31070824 ITEM 100
MATERIAL ACCORDING TO ASTM A 333, 11/ASME SA 333 07, GR. 1/6 /2004 2 345 1 GR 3/9 CAT: 65	MATERIAL DE ACUERDO A ASTM A 333, 11/ASME SA 333 07, GR. 1/6/2004 2 345 1 GR 3/9 CAT: 65

MARKING / MARCACION

Marking / Marcación	
PIPE STENCIL:	MASCARILLA DE TUBO ESTARCIDO:
#*****, TENARIS TM ASTM A333/ASME SA333 / CSA Z245.1 #PE1 355.6 15.10 126.72 SCH 060 GR. 1/6/359 CAT	#*****, TENARIS TM ASTM A333/ASME SA333 / CSA Z245.1 #PE1 355.6 15.10 126.72 SCH 060 GR. 1/6/359 CAT
II 5S QT MADE IN MEXICO #QT***** KG HEAT #C***** P.O.# 31070824 / #*****, HABILITADA MADE IN MEXICO	II 5S QT MADE IN MEXICO #QT***** KG HEAT #C***** P.O.# 31070824 / #*****, HABILITADA MADE IN MEXICO
WHERE:	DONDE:
Heat number #C*****	Número de colada #C*****
Manufacturing Date #PE1	Fecha de Fabricación #PE1
Net weight of pipe in Kgs #K*****	Peso neto de tubo en Kgs #K*****
Length Mts #L*****	Longitud de tubo en Mts #L*****
Order, Consecutive, number #Q*****	Núm. de Pedido, Secuencial #Q*****
HABILITADA 31070824 (100) PO: E1-4027 10	HABILITADA 31070824 (100) PO: E1-4027 10

The certificate number (1), a combination of the order number and the piece number, is the only identification of the product mentioned in this certificate. Tenaris is identified as the manufacturer of the product mentioned in this certificate. Tenaris hereby declares that, to the best of its knowledge and belief, the information contained in this certificate is correct.

Este certificado se emite únicamente para el producto identificado en el mismo. El número de certificado (1), una combinación del número de pedido y número de pieza, es la única identificación del producto mencionado en este certificado. Tenaris es identificado como el fabricante del producto mencionado en este certificado. Tenaris declara que, según el saber y entender de la misma, la información contenida en este certificado es correcta.

Order#: 301587 Seq: 3 PO#: PO0100411 Heat#: 65089 Mill: Tubos de Acero de Mexico
Part#: P 14 60 S3 S B Part Desc: Pipe 14 (355.6mm O.D.) SCH 60 SMLS A/SA333 6 SRL REVELLED END (.594W)

Tenaris

INSPECTION CERTIFICATE 3.1
CERTIFICADO DE INSPECCIÓN 3.1
EN 10204 3.1: 2004

Number / Número	Page / Página
13036252	7 / 7
Date / Día: May 31, 2013	

Customer / Cliente: COMCO PIPE & SUPPLY CO.	Customer's Order Item / Orden Cliente / Item: E1-4627 ITEM 10	Customer's Reference / Ref. del Cliente: N/A	Manufacturer's Work Order # / Confirmación de Orden: 1959350/10

Manufacturing Process / Proceso de Manufactura:	Product Type / Tipo de Producto:	Surface / Superficie:
SEAMLESS HOT ROLLED LAMINADO EN CALIENTE SIN COSTURA	LINE PIPE SEAMLESS CONDUCCION SIN COSTURA	VARNISHED BARNIZADO

Standard or Specification / Norma o Especificaciones:	Steel Grade / Grado de acero:	Ends / Extremos:
ASTM A333,11	GR.1/6	NORMAL BEVEL BISELADO NORMAL

Dimensions / Dimensiones:	Schedule / Cedula:	Length / Longitud:	Quantity / Cantidad, 5 Pcs/Pz		Nominal Weight / Peso Nominal:
14.000 X 0.594 INCH 355.6 X 15.1 MM	060	37.89 / 44.00 FT 11.55 / 13.41 MTS	255.640 FT 77.980 MTS	21888.534 LB 9933.000 KG	69.13 LB/FT 126.72 KG/M

SUMMARY REPORT / REPORTE RESUMEN

Heat Nº Colada Nº	Quantity Cantidad	Length Longitud		Weight Peso
	Pieces	(ft)	(m)	(kgs)
65089	6	266.84	77.98	9,933

Average length per pipe		Nominal weight per pipe	
Longitud promedio por tubo		Peso nominal por tubo	
(ft)	(m)	(lb/m)	(kg/m)
42.64	12.997	69.585	127.379

We hereby certify that the product described here has been manufactured, sampled, tested, and inspected in accordance with purchase order requirements. This certificate is not a declaration of origin and may not be used as a declaration of origin.

Por el presente certificamos que el material aquí descrito ha sido fabricado, muestreado, ensayado e inspeccionado de acuerdo a los requisitos de la orden de compra. Este certificado no es, o puede ser usado como una declaración de origen.

CUSTOMER - THIRD PARTY	TENARIS QUALITY DEPARTMENT SIGNATURE	
INSPECTION COMPANY COMPAÑIA DE INSPECCIÓN NO APLICA Birmingham Name, N/A	QUALITY CERTIFICATION DEPT. DEPTO. DE CERTIFICACIÓN DE CALIDAD Marco A. Benitez Pena	CHIEF OF QUALITY CERTIFICATION DEPT. RESPONSABLE DEL DEPTO. DE CERTIFICACIÓN DE CALIDAD Rafael Quintero de Oliveira Magalhaes

This certificate is issued by a computer data system and is valid with electronic signature. The data originally recorded in the Tenaris steel plant system remains stored in Tenaris' database. Access to the content of the original certificate version requires a copy of it to be kept online by the original data owner. Upon request the responsibility for any printout or any subsequent use, will be taken over by the requester of the printout.

Este certificado es emitido mediante sistema computarizado de procesamiento de datos y es válido con firma electrónica. Los datos originalmente grabados en el sistema siderúrgico de Tenaris permanecen almacenados en la base de datos de Tenaris. Para acceder al contenido del certificado original emitido es necesario contar con una copia del mismo, conservada en línea por el propietario original de los datos. Cualquier impresión o uso posterior de dicha copia será responsabilidad del solicitante de la misma.

POR PO#0991 Item#4| 179356 | CL 300 W/N FLANGE RF XH
Heat Number: 179356 | BORE A105N SCH 40
Trans Am Pip Ing Products Ltd. - Rev'd By: JES
PO#: 0991 | EL. 13 - 8413 | MACHINE TO SCH 40
Mill: 13.991 | SEQ #: 13.157 .

METALFAR
PRODOTTI INDUSTRIALI S.P.A.
[illegible] - 21831 CESANA BRIANZA (LC) - Italy
Via E. Fermi, 26
Tel. +39 031.855401
Fax +39 031.855148
quality.control@metalfar.com
SALA PROVE E ANALISI MATERIALI / MATERIAL TEST DEPARTMENT

COMPANY WITH QUALITY SYSTEM
CERTIFIED BY DNV
= ISO 9001 =

CERTIFICATO DI COLLAUDO SECONDO EN 10204 - 3.1 INSPECTION CERTIFICATE

Certif. N. 895	Del/Dated 12.02.2013	Fattura / Invoice N.	Del/Dated
DDT / Del Note N.	Del/Dated	Ns.Ord. / Our ref. N. 481	Del/Dated 12.02.2013

TRANS AM PIPING PRODUCTS LTD

9355 ENDEAVOR DRIVE S.E.
T3S 0A1 CALGARY, ALBERTA CA

COD. COL. / HEAT CODE	COLATA / HEAT	POS. / ITEM	VS.ORDINE / YOUR REFERENCE	Q.TA' / Q.TY	DESCRIZIONE / DESCRIPTION	DIM.IN ACC. A / DIM. ACCORDANCE TO	VISIVO E DIMENS. / VIS. & DIMENS.
	179356	007	CI-12-429	10,00	W/N 300 RF 14" XS A105N	ASME/ANSI B16.5 -2009	SATISFACTORY

MATERIALE / MATERIAL	C%	Si%	Mn%	S%	P%	Cr%	Ni%	Mo%	Ti%	Cu%	V%	Nb%	N%	Al%	C.E.%
ASTM A105 (LADLE)	0,190	0,230	1,040	0,009	0,013	0,060	0,050	0,020	0,019	0,160	0,002	0,002	0,000	0,027	0,396

PROVETTA / TEST SPECIMEN SEZ. mm2 / SECT. mm2	LUNG. mm / LENGHT mm	FORMA / SHAPE 1=○ 2=□	SNERVAMENTO / YIELD POINT N/mm2 >=0,2%	ROTTURA / TENSILE STRENGHT N/mm2 >=	ALLUNGAMENTO / ELONGATION %>=	CONTRAZIONE / REDUCTION OF AREA %>=	DUREZZA / HARDNESS HBW	RESILIENZA / IMPACT TEST - JOULE/mm2 TIPO / TYPE 10x10mm	°C	1	2	3	SNERVAMENTO / YIELD POINT N/mm2 >=LRK	N.L.R. / OUR REF.
126,60	50,50	1	311,0	534,0	29,0	56,0	165,0 - 167,0	KV	20	87	69	69	0,0	

MATERIALE IN ACCORDO A / MATERIAL IN ACC. TO
ASTM/ASME A 105/SA 105 M - 11 ASME CODE SECT. II, PART A, ED. 2010 ADD. 2011a
CSA Z245.12 GRADE 248 CAT.I SOUR SERVICE

TRATTAMENTO TERMICO / HEAT TREATMENT
NORMALIZED AT 920 C - COOLED IN STILL AIR

FORNO / FURNACE
ELECTRIC FURNACE

ORIGINE / ORIGIN OF STEEL
EUROPEAN UNION

NOTE DISPATCH NOTE No.33010803
NOTES 100% MANUFACTURED IN ITALY
MANUFACTURING IN ACCORDANCE WITH ORDER AND SPECIFICATION
MATERIAL IN ACCORDANCE WITH NACE MR-0175/2009 ISO 15156-2009 - SOUR SERVICE
MATERIAL IN ACCORDANCE WITH NACE MR-0103/2012 - SOUR SERVICE

UFFICIO CONTROLLO QUALITA' / QUALITY CONTROL DEPARTEMENT	ENTE UFFICIALE DI COLLAUDO / INSPECTION AUTHORITY	MARCHIO PRODUZIONE / MANUFACTURER'S SYMBOL
		MFF

EN ISO 9001 : 2008
Zertifikat-Registrier-Nr. 44 100 071888

Bereich Flansche / Flange Division
Flanschenwerk Bebitz GmbH - Lebendorfer Str. 1 - 06420 Bebitz / GERMANY (A01)
Tel. +49 34691 40 0 - Fax +49 3469140 329 - Email: flanges@bebitz.de

Abnahmeprüfzeugnis 3.1 / Inspection certificate 3.1 / Certificat de reception 3.1

nach (A02) / acc. DIN EN 10204 : 2005 Nr. (A03) / No. 12-08463 **Datum (Z02) / Date** 03.04.2012

Zeichen des Herstellers (A04) / Manufacturer's brand: [B]

Stempel des Abnehmers (Z03) / Stamp of the testing engineer: TKO B

Überprüft als Hersteller nach AD-Merkblatt W0 / TRD100 und VdTÜV Werkstoffblätter 350/3, 354, 399. / Approved as manufacturer acc. AD-Merkblatt W0 / TRD100 and VdTÜV Material Sheets 350/3, 354, 399
Zertifiziert nach DGR 97/23/EG durch TÜV CERT Zertifizierungsst. für Druckgeräte der TÜV NORD GmbH Co KG, Benannte Stelle Nr. 0045. / Certified acc. to PED 97/23/EC, certifying body for pressure equipment TÜV NORD GmbH Co KG, registration no. 0045.

Besteller (A06) / Customer

Bestell-Nr (A07) / Order-No. 111811-ABG
Auftrag (A08) / Order 3122747
Lieferschein / Delivery No. 3231522
Position (B07.1) / Item 10

Stck (B08) Quantity	Bezeichnung (B01; B09 - B11) Product	Schmelze/Prüflos (B07) Heat no./Test no.
50	14 inch Welding Neck Flange 300 lbs Sch.40 raised face	20421/4

Material (B02; B05) LF2 Class 1 - ASTM A 350M-07 / ASME SA-350M
forged 1050 - 1150°C / normalized 898 - 925°C, still air

Anford. (B03) Requirements ASME B 16.5-2009
NACE MR0175-2011 / MR0103-2010 - DIN EN ISO 15156-2 : 2009
2011a ASME Boiler & Pressure Vessel Code - Section II Part A

Schmelzenanalyse (C71 - C92) / Ladle analysis **Erschmelzung (C70) / Melting process** E

C	Si	Mn	P	S	Cr	Ni	Ti	Mo	Nb	V	N	Cu	Al	CEV
0,180	0,23	1,14	0,014	0,008	0,05	0,07		0,01	0,001	0,016		0,18	0,026	0,40

Mechanische Prüfungen / Mechanical tests

$$CEV = C + \frac{Mn}{6} + \frac{V + Mo + Cr}{5} + \frac{Ni + Cu}{15} \qquad PREN = Cr + 3{,}3 \times Mo + 16 \times N$$

Probenlage (C02): q/t / Position of Specimen: q/t
Zugversuch / Tensile Test - ASTM A 370 $l_0 = 4\,d_0$

Temp (C03) °C	Streckgr. (C11) / Yield strength 0,2% MPa (N/mm²)	1,0% MPa (N/mm²)	Zugfestigk. (C12) Tensile strength MPa (N/mm²)	Dehng. (C13) Elongation %	Einschnürg. Red. of area %	KBV / Charpy Impact Test DIN EN ISO 148-1 Temp. (C03) °C	Einzelwerte (C42) Single values J			MW (C43) Average J	Härte (C32) Hardness ISO 6506-1 HBW 2,5/187,5
20	min 250 max		485 655	22,0	30	-46	20			27	137 187
20	344		520	32,7	72	-46	131	121	110	120,7	158

esichtigung und Ausmessung ohne Beanstandungen. (D01) / Results of inspection and dimension without objections.
ie gestellten Anforderungen sind erfüllt. (Z01) / The product meets the requirements

. Sparing,
bnahmebeauftragter des Herstellers (Z02)
spection Representative of the Manufacturer

APZ wurde mit EDV erstellt und ist ohne Unterschrift gültig. /
This MTR was electronically generated and is valid without a signature.
Angaben in Klammern entsprechen den Vorgaben der DIN EN 10168 /
Data in parentheses refer to EN 10168.

C068934

PJSC DNIPROSPETSSTAL, YUZHNOYE SHOSSE 81, 69008 ZAPOROZHYE, UKRAINE

Contract No.: 50005
TECHN.PROTOCOL № 210-11 SPEC.№7695/P028087-ED
ASTM A182/A182M-10;ASME SA-182/SA-182M-10;ASTM A276-10;ASTM A314-08;ASTM A479/A479M-10;ASME SA-479/SA-479M-10;ASTM A484/A484M-10;AMS-QQ-S-763B-06 Cond.A; AMS 5648K-07;AMS 5653F-07;ASTM A193/A193M-10 GR B8M,CL1 ;ASME SA-193/SA-193M-10GR B8M,CL1;ASTM 320/A320M-08GR B8M,CL 1;ASME SA-320/SA-320M-10 GR B8M,CL 1;NACE MR 0175-03;NACE MR 0103-10

Sheets:8 Sheet: 7
QUALITY CERTIFICATE EN10204/3.1 **Nr.265849**
PLANT ORDER № 8014907695

GMS Certified

CUSTOMER
DSS INTERNATIONAL SA
Switzerland

PRODUCT DESCRIPTION
Bars and rods of corrosion-resistant (stainless) steel forged, peeled .Прутки из коррозионностойких (нержавеющих) сталей кованые, обточенные.
STEEL MAKING PROCESS: EAF+AOD
СПОСОБ ВЫПЛАВКИ:Электродуговая печь+АКР
Round 18.750in/476.25 mm L=5.045m/9.984ft
Grade: 316/F316/316L/F316L

QUANTITY:
(number of pcs) **1bund Q-9740 lb/4418 kg**

Delivery condition
solution annealed :1922°F(1040°C)/water 30 minutes
термообработказакалка в воду

ANALYSIS, %	C	Si	Mn	P	S	Cr	Ni	Mo	Al	Cu	V	W	Ti	Co	Nb	N_2		
REQUIRED	<.030	<1.00	1.25-2.00	<.040	.020-.030	16.00-18.00	10.00--14.00	2.00--3.00	<.10	<.40	<.10	<.20	<.15	< 40	<.20	<.10		
CAST № 98363	.023	.45	1.32	.035	.024	16,79	10.17	2.10	.084	.28	04	.13	.005	.09	.01	025		

ASTM A370-08a

MECHANICAL PROPERTIES	Yield Strength, Rst(N/mm²) Rc ($R_{0.2}$)	Tensile Strength, Rm,ksi (N /mm²)	Elongation A_5 %	Reduction of area, Z %	Brinell Hardness HB	Impact strength, KV, J
REQUIRED	36(248)	75 (515)	45	50	140-223	100
EFFECTIVE	36.7(252)	81.4(559)	59	75	163	251

Mechanical properties tested in state of delivery

US - testing | yes | Results: «ASTM A388 FBH 1/5 " »

Radiation free; mercury free. No Weld or Weld repair.

TECHNICAL REQUIREMENTS:
Macrostructure – GOOD
GRAIN SIZE : 5 to ASTM E 112-96(2004)
Nonmetallic inclusions ASTM E 45-05 (Method A)

A		B		C		D	
thin	thick	thin	thick	thin	thick	thin	thick
2.5	2.0	2.0	1.0	0.0	0.0	1.0	1.0

ICC-ASTM A262-08 (practice E)-test: O.K.
Dimension/surface defects test, anti-mixing test – OK

Manufacturer: PJSC DNIPROSPETSSTAL
Date: 20.09.12 **Manager of quality assurance department** - V. Kapaieva Signed:

Zaporozhye
Made in Ukraine.

TEAM Industrial Services
Inspection Services Canada
ISO 9001: 2008

RADIOGRAPHIC EXAMINATION REPORT

2807 - 84 Avenue, Edmonton, Alberta T6P 1K7
Phone (780) 410-7777 Fax: (780) 417-1185

RT - 2440-01-CL

CLIENT: Canalta Controls | INVOICE ADDRESS: Red Deer | DATE: 21-Oct-13

WORK LOCATION: Red Deer | TEAM PROCEDURE: RT ASME 1 R17

EXAMINATION STANDARD: ASME V Article 2 | ACCEPTANCE STANDARD: ASME B31.3 Normal

EXAMINATION OF: 5 Blue Process piping

TEAM JOB NO:	2440
BRANCH:	Red Deer
PO NO.:	10432
RP NO.:	6451-1
PAGE:	1 OF 1

DEFECT LEGEND:
UC - UNDERCUTTING; P - POROSITY; HB - HOLLOW BEAD
SF - INCOMPLETE FUSION; S - SLAG; IC - INTERNAL CONCAVITY; CR - CRACK
IP - INCOMPLETE PENETRATION; BT - BURN THROUGH; LC - LOW COVER; AB - ARC BURN
EP - EXCESSIVE PENETRATION; SH - SHRINKAGE; HB - HOLLOW BEAD

TECHNIQUES	
EXPOSURE	VIEWING
1. SINGLE WALL	1. SINGLE WALL
2. DOUBLE WALL	2. DOUBLE WALL

TYPE OF ENERGY: Ir192 | INTENSIFYING SCREENS: 0.25mm/0.25mm Pb | FILM MANUFACTURER: GE
PHYSICAL SIZE: 3.5mm | FILM PER CASSETE: 1 | FILM USED: 18 x (2.75" x 17") B4
IQI TYPE: ASTM Wire | WELD MATERIAL: P1 | FILM USED: 6 x (2.75" x 8.5") B4
FILM USED:

RADIOGRAPH IDENTIFICATION				RADIOGRAPH GEOMETRY									RADIOGRAPH RESULTS		
WELD ID	LOCATION	WELD SIZE	WELDER	TECHNIQUE	EXPOSURES PER WELD	WELD DEPOSIT THICKNESS	BASE MATERIAL THICKNESS	REINFORCE THICKNESS	SOURCE-OBJECT DISTANCE	OBJECT-FILM DISTANCE	FILM TYPE	IQI SIZE	INTERPRETATION 1 - SLIGHT, 2 - MEDIUM, 3 - SEVERE	COMMENTS	STATUS
X1	D140012	14"	F	1/3	1	14.1mm	11.1mm	3.0mm	163.2mm	14.1mm	D4	B			Accept
X2	D140012	14"	F	1/3	1	14.1mm	11.1mm	3.0mm	163.2mm	14.1mm	D4	B			Accept
X3	D140012	14"	F	1/3	1	14.1mm	11.1mm	3.0mm	163.2mm	14.1mm	D4	B	S @94cm		Accept
X4	D140012	14"	F	1/3	1	14.1mm	11.1mm	3.0mm	163.2mm	14.1mm	D4	B			Accept
X5	D140012	14"	F	1/3	1	14.1mm	11.1mm	3.0mm	163.2mm	14.1mm	D4	B			Accept
X6	D140012	14"	F	1/3	1	14.1mm	11.1mm	3.0mm	163.2mm	14.1mm	D4	B	P(2) @22,27,28,30,35,63,85, 85, 90, 99cm	S(2) @50-53, 56, 59-62, 65, 66, 75-76, 94cm	Accept

IN INTERPRETATION IS IN ACCORDANCE WITH THE ABOVE MENTIONED STANDARD, TO THE BEST OF MY PROFESSIONAL ABILITY

TECHNICIAN (PRINT): Charles Jacquski | TECHNICIAN (SIGN): | CGSB/SNT LEVEL: II/II | RBG NO: 11295 | ASSISTANT: Craig Okeri, Brandon Way

THE ABOVE REPRESENTATION IS, TO PROFESSIONAL OPINION, FINAL INTERPRETATION IS THE RESPONSIBILITY OF THE CLIENT. I HAVE REVIEWED AND AM IN FULL AGREEMENT WITH THE CONTENTS OF THIS REPORT

CLIENT REPRESENTATIVE (PRINT): Tyler H | CLIENT REPRESENTATIVE (SIGN): Tyler H | DATE: Oct/21/2013



E16 Instrument Seller Catalogue Information

2303-8th Street, Nisku Alberta, T9E-7Z3 CANADA

FEDERAL SIGNAL CORPORATION



Hazardous Location Warning Light

Model 151XST

RUGGED DESIGN FOR USE IN HAZARDOUS LOCATIONS

- Available in 12-24VDC, 120VAC and 240VAC
- Six dome colors
- 10,000-hour high-intensity strobe
- 3/4-inch pipe mount
- UL Listed, CSA Approved for indoor/outdoor use
- NEMA 4X, IP66 enclosure
- Marine Rated

Federal Signal's Model 151XST hazardous location strobe light provides 80 high-intensity flashes per minute. This warning light is available in 12 - 24VDC, 120VAC and 240VAC, 50/60Hz.

The Model 151XST strobe light is UL (Underwriters Laboratories) listed and CSA (Canadian Standards Association) Approved for Class I, Division 2, Groups A, B, C and D; Class II, Division 1 & 2, Groups E, F and G; and Class III.

The 151XST meets NEMA Type 4X water-tight, dust-tight, and corrosion-resistant requirements; constructed to IP66. This hazardous location warning light has an aluminum base, coated for corrosion-resistance that is ready for mounting on a 3/4-inch pipe. The Dome Guard (included) fits over the glass dome to protect it against accidental collision with moving equipment, such as forklifts.

The 151XST has an effective candlepower (ECP) of 165 and a 520,000 peak candlepower. It is available in six dome colors, including amber, blue, clear, green and red (magenta upon request).

Federal Signal's rugged 151XST strobe warning light is specifically designed for hazardous locations or corrosive environments where a very bright visual signal is required. This warning light can be used for plant evacuation or other communication needs.

Model	Voltage	Operating Current	Flash Rate/ Minute	Candlepower Peak[1]	Candlepower ECP[2]	Mount
151XST	012-024VDC	1.3-0.60 amps	80	520,000	165	3/4" Pipe
151XST	120VAC 50/60Hz	0.32 amps	80	520,000	165	3/4" Pipe
151XST	240VAC 50/60Hz	0.16 amps	80	520,000	165	3/4" Pipe

[1] Peak candlepower is the maximum light intensity generated by a flashing light during its light pulse
[2] ECP (Effective Candlepower) is the intensity that would appear to an observer if the light were burning steadily

HAZARDOUS LOCATION STROBE LIGHT (151XST)

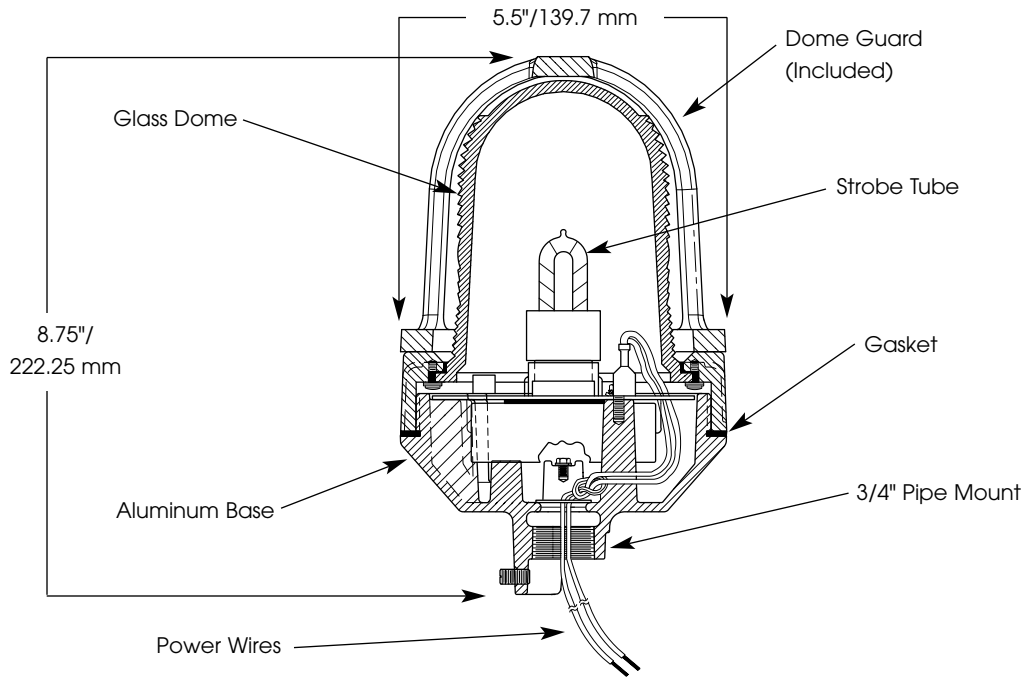

SPECIFICATIONS

Lamp Life*:	10,000 Hours	10,000 Hours
Lamp Style	Strobe	Strobe
Operating Temperature	-31° F to 150° F	-35° C to 66° C
Net Weight:	3.8 lbs.	1.7 kg
Shipping Weight:	4.5 lbs.	2.0 kg
Height:	8.75"	222.25 mm
Diameter:	5.5"	139.7 mm

* Optimal hours under ideal conditions.

RATINGS

- UL Listed and CSA Approved for Class 1, Division 2
- Listed for Marine use (UL 595)
- NEMA Type 4X
- Constructed to IP66

HOW TO ORDER

- Specify model, voltage and color

REPLACEMENT PARTS

Description	***Part Number***	***Description***	***Part Number***
Black Dome/Ring Assembly, Amber	K8449078B-01	PC Assembly, 12-24VDC	K2001173A
Black Dome/Ring Assembly, Blue	K8449078B-02	PC Assembly, 120VAC	K2001071B
Black Dome/Ring Assembly, Clear	K8449078B-04	PC Assembly, 240VAC	K2001071B-01
Black Dome/Ring Assembly, Green	K8449078B-03	Strobe Tube, all voltages	K149122B
Black Dome/Ring Assembly, Red	K8449078B	Dome Gaskets	K8449080A
Black Dome/Ring Assembly, Magenta	K8449078B-07		

FEDERAL SIGNAL
Safety and Security Systems / Industrial

Advancing security and well being

Model 151XST Series Strobe Light for Use in Hazardous Conditions



Pipe-mount model shown

Installation and Maintenance Manual

256822J
REV. J 312
Printed in U.S.A.



Warranty – Seller warrants all goods for five years on parts and 2-1/2 years on labor, under the following conditions and exceptions: Seller warrants that all goods of Seller's manufacture will conform to any descriptions thereof for specifications which are expressly made a part of this sales contract and at the time of sale by Seller such goods shall be commercially free from defects in material or workmanship. Seller reserves the right at the Seller's discretion to "Repair and Return" or "Replace" any item deemed defective during the warranty period. This warranty does not cover travel expenses, the cost of specialized equipment for gaining access to the product, or labor charges for removal and reinstallation of the product. This warranty shall be ineffective and shall not apply to goods that have been subjected to misuse, neglect, accident, damage, improper maintenance, or to goods altered or repaired by anyone other than Seller or its authorized representative, or if five years have elapsed from the date of shipment of the goods by Seller with the following exceptions: lamps and strobe tubes are not covered under this warranty. Outdoor warning sirens and controllers manufactured by Federal Warning Systems are warranteed for two years on parts and one year on labor. No agent, employee, representative or distributor of Seller has any authority to bind the Seller to any representation, affirmation, or warranty concerning the goods and any such representation, affirmation or warranty shall not be deemed to have become a part of the basics of the sales contract and shall be unenforceable. THE FOREGOING WARRANTIES ARE EXCLUSIVE AND IN LIEU OF ALL OTHER WARRANTIES OR MERCHANTABILITY, FITNESS FOR PURPOSE AND OF ANY OTHER TYPE, WHETHER EXPRESS OR IMPLIED. These warranties shall not apply unless Seller shall be given reasonable opportunity to investigate all claims for allegedly defective goods. Upon Seller's instruction a sample only of allegedly defective goods shall be returned to Seller for its inspection and approval. The basis of all claims for alleged defects in the goods not discoverable upon reasonable inspection thereof pursuant to paragraph 8 hereof must be fully explained in writing and received by Seller within thirty days after Buyer learns of the defect or such claim shall be deemed waived.

FEDERAL SIGNAL
Safety and Security Systems / Industrial

Industrial Systems
2645 Federal Signal Drive • University Park, IL 60484-3167
Tel: 708-534-4756 • Fax: 708-534-4852
Email: elp@federalsignal.com • www.federalsignal-indust.com

Contents

Safety Messages to Installers **5**

An Overview of the 151XST Series **6**

Unpacking the Light **7**

Pipe-Mounting the Beacon (151XST) **9**

Surface-Mounting the Beacon (151XST-S) **10**

Wiring the Beacon **11**

Wiring the AC Models 12

Wiring DC Models 14

Safety Message to Maintenance Personnel **14**

Replacing the Flash Tube 16

Replacing the Printed Circuit Board (PCB) 17

Cleaning the Fixture **18**

Lubricating the Threaded Joint **18**

Getting Service, Assistance, and Parts **19**

Repair Service 19

Technical Assistance 19

Accessories and Replacement Parts 19

Returning the Product for Credit **20**

Tables

Table 1 Specifications 7

Table 2 Voltage and operating current 7

Table 3 Flash rate and candelas 8

Table 4 Hazardous Location Rating 8

Table 5 Accessory 19

Table 6 Replacement parts 20

Figures

Figure 1 Pipe-mounted beacon 10

Figure 2 Surface-mounted beacon 11

Figure 3 Cross section of beacon with surface mount base 13

Figure 4 Flash tube darkening 17

Safety Messages to Installers

⚠ WARNING

It is important to follow all instructions shipped with this product. This device is to be installed by a trained electrician who is thoroughly familiar with the National Electrical Code and/or Canadian Electrical Code and will follow the NEC and/or CEC Guidelines as well as all local codes. This beacon should be considered a part of the warning system and not the entire warning system.

The selection of the mounting location for the beacon, its controls and the routing of the wiring are to be accomplished under the direction of the facilities engineer and the safety engineer. In addition, listed below are some other important safety instructions and precautions you should follow:

- Read and understand all instructions before installing or operating this beacon.
- Never alter the unit in any manner. Safety in hazardous locations may be endangered if additional openings or other alterations are made to units specifically designed for use in these locations.
- Do not connect this light to the system when power is on.
- After installation, ensure that the set screw is properly tightened and that threaded joints are fully engaged.
- After installation, test the light system to ensure that it is operating properly.
- After testing is complete, provide a copy of this instruction sheet to all operating personnel.
- Establish a procedure to routinely check the light installation for integrity and proper operation

Failure to follow all safety precautions and instructions may result in property damage, serious injury, or death.

An Overview of the 151XST Series

Federal Signal's Model 151XST hazardous location strobe light provides 80 high-intensity flashes per minute. This warning light is available in 12-24 Vdc, 120 Vac and 240 Vac, 50/60 Hz.

The Model 151XST strobe light is UL Listed and CSA Certified for Class I, Division 2, Groups A, B, C and D; Class II, Division 1, Groups E, F and G; and Class III.

The 151XST meets Type 4X water-tight, dust-tight, and corrosion-resistant requirements; constructed to IP66. This hazardous location warning light has an aluminum base, coated for corrosion resistance that is ready for mounting on a 3/4-inch NPT pipe. The included dome guard fits over the glass dome to protect it against accidental collision with moving equipment, such as forklifts. An optional wall bracket is also available.

The 151XST has an effective candela (ECP) of 165 and a 520,000 peak candela. It is available in six dome colors, including amber, blue, clear, green and red (magenta upon request).

Federal Signal's rugged 151XST strobe warning light is specifically designed for hazardous locations or corrosive environments where a very bright visual signal is required. This warning light can be used for plant evacuation or other communication needs.

Models are available for pipe mounting (151XST) or surface mounting (151XST-S).

NOTE: The Model 151XST can be mounted to a Federal Signal Model LHWB bracket. If installed in this way, the entire assembled device is suitable only for Class I, Div. 2, Groups A, B, C, and D; Class II, Div. 2, Groups F and G; Class III locations.

Unpacking the Light

⚠ WARNING

EXPLOSION HAZARD—Damaged domes can lead to explosions that could result in serious injury or death.

After unpacking the beacon, examine it for damage that may have occurred in transit. If the beacon has been damaged, do not attempt to install or operate it. File a claim immediately with the carrier, stating the extent of the damage. Carefully check all envelopes, shipping labels, and tags before removing or discarding them. Disposal of all shipping materials must be carried out in accordance with national and local codes and standards. If any parts are missing, please call Federal Signal Customer Support at 708-534-4756.

Table 1 Specifications

Lamp Life:	10,000 Hours
Light Source:	Strobe tube
Operating Temperature:	–67 °F to 150 °F (–55 °C to 65.6 °C)
Net Weight:	3.8 lb (1.7 kg)
Shipping Weight:	4.5 lb (2.0 kg)
Height:	9.25 in (234.95 mm)
Diameter:	5.5 in (139.7 mm)

Table 2 Voltage and operating current

Model	Voltage	Operating Current
151XST(-S) 012-024__	12-24 Vdc	1.3 to 0.60 A
151XST(-S)-120__	120 Vac, 50/60 Hz	0.35 A
151XST(-S)-240__	240 Vac, 50/60 Hz	0.16 A

__ Indicates color: (A) amber, (B) blue, (C) clear, (G) green, (M) magenta or (R) red.

Table 3 Flash rate and candelas

Model	Flash Rate per Minute	Candela	
		Peak[1]	ECP[2]
151XST(-S) 012-024__	80	520,000	165
151XST(-S)-120__	80	520,000	165
151XST(-S)-240__	80	520,000	165

__ Indicates color: (A) amber, (B) blue, (C) clear, (G) green, (M) magenta or (R) red.

[1]Peak candela is the maximum light intensity generated by a flashing light during its light phase.

[2]ECP (Effective Candela) is the intensity that would appear to an observer if the light were burning steadily.

Table 4 Hazardous Location Rating

Temperature Code at Maximum Temperature, °C	
Hazardous Location	**66 ºC**
Class I, Div 2, Groups A, B, C & D	T1/301º
Class II, Div 1, Groups E, F & G	T5/100º
Class III	T5/100º

To reduce the risk of fire or explosion, do not install the beacon in a hazardous location if the operating temperature exceeds the ignition temperature of hazardous atmosphere.

Before proceeding, use Table 4 above as a guide and determine that the unit's operating temperature DOES NOT exceed the hazardous atmosphere's ignition temperature.

For marine applications, all wiring including supply wire must be stranded wire and meet the USCG (CFR46) Sections (110-113).

NOTE: In high-humidity environments when units are mounted dome down, condensation may occur in the conduit system. Use properly rated conduit seals/drains to prevent moisture from entering the fixture.

Pipe-Mounting the Beacon (151XST)

⚠ WARNING

EXPLOSION HAZARD—To reduce the risk of fire or explosion, do not install the beacon in a hazardous location if the operating temperature exceeds the hazardous atmosphere's ignition temperature. Before proceeding, consult the product nameplate and determine the operating temperature of the beacon.

NOTE: To comply with NEC Section 300-14, which requires a minimum of 6 inches (15.25 cm) of free conductor at a junction, when mounting the Model 151XST, the mounting pipe used to join the unit to a splice box should be no longer than 10 in (25.4 cm).

The Model 151XST has provisions for mounting a 3/4" pipe and can be mounted in any position.

1. Before mounting the beacon, ensure that the mating threads are clean.
2. To prevent the ingress of water and dust, apply conductive sealant to the conduit threads prior to mounting. If non-conductive sealant is used, the enclosure must be earthed via the provided internal grounding wire/grounding screw to ensure proper grounding continuity (Figure 3 on page 13).
3. See Figure 1 on page 10. Thread the fixture onto the 3/4-inch pipe and secure it with the set screw.

Figure 1 Pipe-mounted beacon

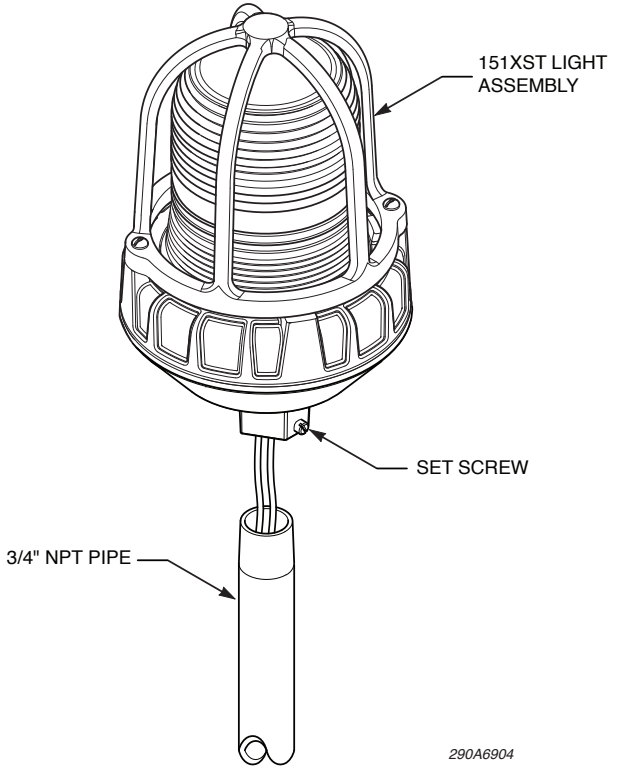

Surface-Mounting the Beacon (151XST-S)

To surface mount the beacon:

1. See Figure 2 on page 11. Use the mounting base as a template to mark the location of the two mounting holes.
2. Drill a 9/32-inch (7.143 mm) hole at each mark.
3. Secure the beacon to the mounting surface with installer supplied hardware.

Figure 2 Surface-mounted beacon

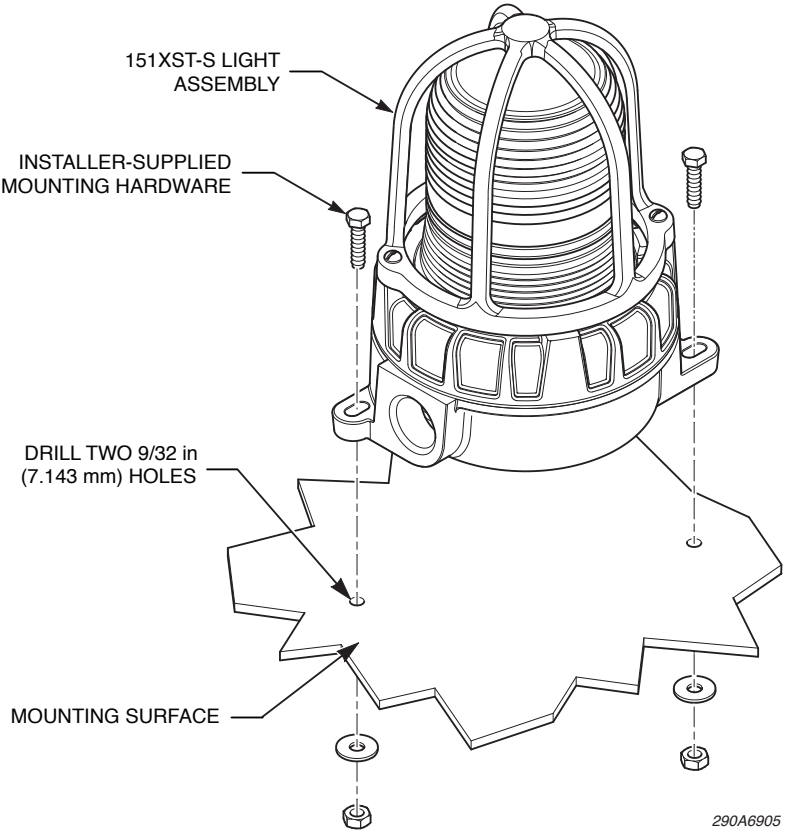

Wiring the Beacon

The Model 151XST Series LED Beacon should be installed per the NEC or CEC, STATE and LOCAL CODES. Alternate installation locations and/or orientations should only be performed with the approval of the authority having jurisdiction. In addition, the unit can be mounted using an optional ceiling mount or optional wall mount.

NOTE: The 120 Vac or 230-240 Vac strobe units are designed to operate on both 50 Hz and 60 Hz electrical power. Special modifications are NOT required for the two different AC line frequencies.

⚠ WARNING

SHOCK HAZARD—To avoid electrical shock hazards, do not connect wires while power is applied.

⚠ WARNING

EXPLOSION HAZARD—Do not disconnect the beacon while the circuit is live or unless the area is known to be free of ignitable concentrations. Keep the beacon tightly closed when in operation.

NOTICE

REVERSE POLARITY/MISWIRING—The 151XST is not polarity sensitive, but MAY BE DAMAGED by incorrect electrical hookup. Damage will result if the voltage rating of the particular model is exceeded.

NOTE: Wiring must comply with the National Electrical Code or Canadian Electrical Code and the local authority having jurisdiction.

Wiring the AC Models

The AC have two 24-inch leads, one black and one white. To wire the AC beacon:

1. Ensure that power is off.
2. Remove the threaded dome assembly by twisting it counterclockwise.
3. Connect the black lead to the phase (hot) side of the power source and the white lead to the common (neutral) side of the AC power source.
4. If required, the green screw in the housing is provided for connection to an earth ground (Figure 3 on page 13). To gain access to the screw, remove the power supply assembly.
5. Secure the dome to the base of the beacon.

6. Connect power to the beacon and test it for proper operation.

Figure 3 Cross section of beacon with surface mount base

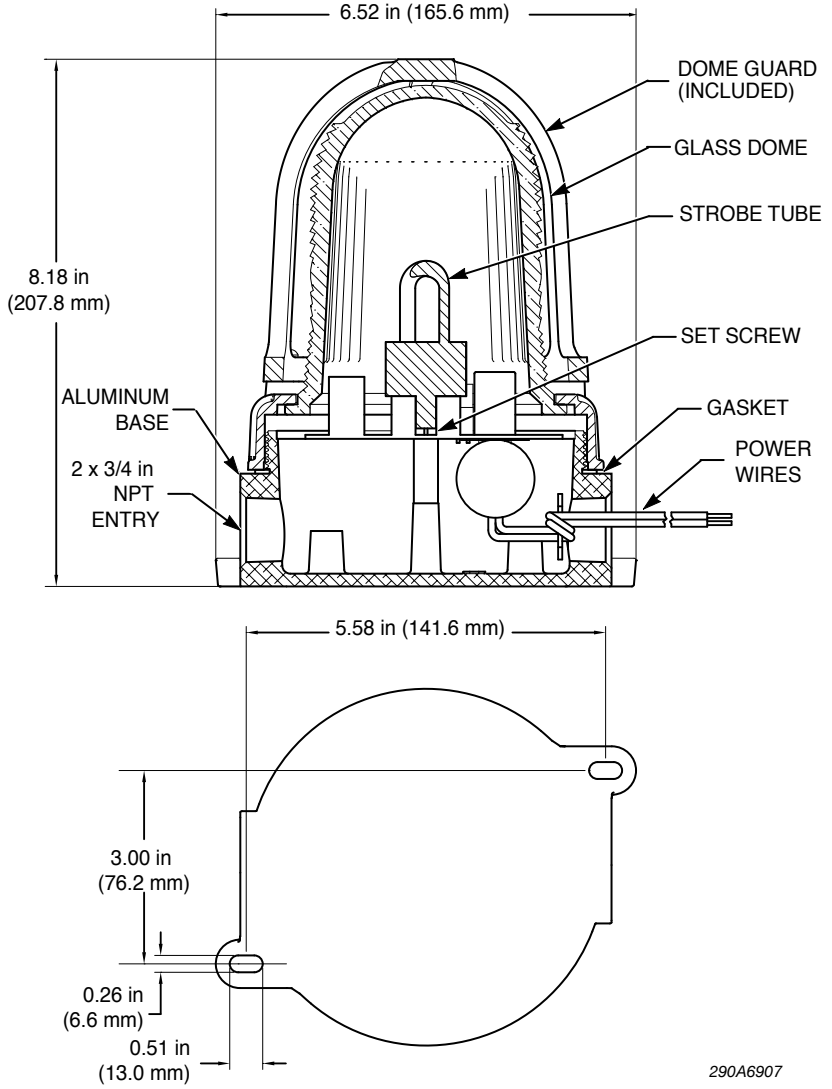

Wiring DC Models

The DC units have two 24-inch leads, one black and one red. To wire the DC beacon:

1. Ensure that power is off.
2. Remove the threaded dome assembly by twisting it counterclockwise.
3. Connect the red (+) lead to the positive side of the power source and the black (–) lead to the negative side of power source.
4. If required, the green screw in the housing is provided for connection to an earth ground. To gain access to the screw, remove the power supply assembly.
5. Secure the dome to the base of the beacon.
6. Connect power to the beacon and test it for proper operation.

Safety Message to Maintenance Personnel

Listed below are some important safety instructions and precautions you should follow:

- Read and understand all instructions before operating this system.
- Any maintenance to the light system must be done with power turned off.
- Any maintenance to the light system must be performed by a trained electrician who is thoroughly familiar with all applicable national and local codes in the country of use.
- Do not connect this beacon to the system when power is on.
- Do not disconnect the beacon while the circuit is live or unless the area is known to be free of ignitable concentrations. Keep the beacon tightly closed when in operation.

- Never alter the unit in any manner. Safety of the unit may be affected if additional openings or other alterations are made to the internal components or housing.
- The nameplate should NOT be obscured, as it contains cautionary and/or other information of importance to maintenance personnel. Ensure the nameplate remains readable if the housing exterior is painted.
- If the dome is damaged in any way, it MUST be replaced.
- After performing any maintenance, test the light system to ensure that it is operating properly.

Failure to follow all safety precautions and instructions may result in property damage, serious injury, or death.

Servicing the Beacon

⚠ WARNING

EXPLOSION HAZARD—To prevent ignition of hazardous atmospheres, disconnect the fixture from the supply circuit before opening it.

⚠ WARNING

EXPLOSION HAZARD—Do not disconnect the beacon while the circuit is live or unless the area is known to be free of ignitable concentrations. Keep the beacon tightly closed when in operation.

⚠ WARNING

EXPLOSION HAZARD—To maintain the vapor-tight enclosure, do not damage the globe or threads while disassembling or reassembling the unit. Lubricated threaded joints exposed for long periods of time may attract small particles of dirt or other foreign materials. Housing and cover joints should be reassembled immediately, with all the threads fully engaged.

⚠ WARNING

SHOCK HAZARD—High voltages are present inside the light assembly. Wait at least 5 minutes after shutting off the power before servicing this unit.

Establishing a regular maintenance and inspection schedule extends the life of the Model 151XST and ensures safety. For service, support, or replacement parts, see page 20.

Replacing the Flash Tube

As strobe lights are used, the flash tubes begin to darken, causing the light output to decrease. This darkening is characteristic of flash tubes. Darkening will begin near the base of the tube and progress upward. Also, as flash tubes age, they may have a tendency to misfire (not fire periodically).

After extended operation, occasionally check for flash tube degradation. Should the flash tube misfire, have a noticeable decrease in light output, glow continuously or darken to a point beyond that shown in Figure 4 on page 17, it should be replaced.

To replace the flash tube:

1. Disconnect power to the beacon and wait at least 5 minutes to allow all capacitors to discharge.
2. Remove the threaded dome assembly by twisting it counterclockwise.
3. With the dome removed, gently pull the flash tube from its socket. A rocking motion is most helpful when installing or removing the tube.
4. Replace the flash tube. Ensure that the replacement tube is fully seated in the socket.
5. Replace the globe assembly. Ensure that the globe assembly is seated securely against the gasket.

6. Test the beacon for proper operation.

Figure 4 Flash tube darkening

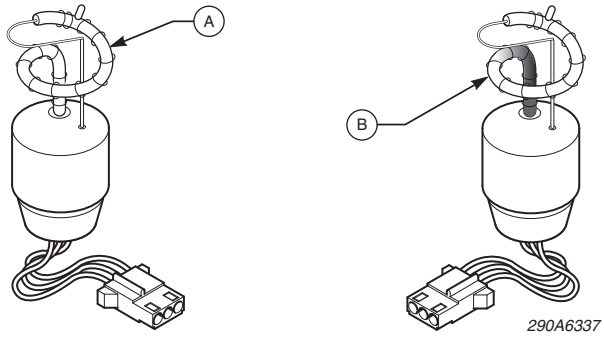

Replacing the Printed Circuit Board (PCB)

To replace the PCB:

1. Disconnect the power to the beacon and wait at least 5 minutes to allow all capacitors to discharge.

2. Remove the threaded dome assembly by twisting it counterclockwise.

3. Remove and retain the screw that secures the circuit board to the housing.

4. Disconnect power to the PCB:

a) To replace a Series A1 PCB, disconnect the two supply wires from the old circuit board and connect them to the mating side of the supplied adapter assembly. Connect the other side of the adapter assembly to the new circuit board.

b) To replace a Series A2 circuit board, disconnect the power connector from the old circuit board and connect it to the connector on the new circuit board.

NOTE: Ensure that the connector is fully seated on the circuit board connectors.

5. Secure the new circuit board to the housing with the screw removed in step 2.

6. Install the new flash tube in the socket. Ensure that the flash tube is fully seated in the socket.

7. Replace the globe assembly. Ensure that the globe assembly is seated securely against the gasket.

8. Test the light for proper operation.

Cleaning the Fixture

⚠ WARNING

EXPLOSION HAZARD—Never use an abrasive material or file to remove corrosive materials from threaded surfaces. In extremely corrosive locations, equipment should be periodically inspected to guard against unusual deterioration and possible porosity, since this may weaken the enclosure structurally.

Maintenance procedures sometimes require fixtures to be hosed down for good housekeeping. The circuit should be turned off prior to hosing down the fixture.

The fixture should be cleaned periodically to maintain maximum light output. Only mild, non-abrasive cleaning agents should be used. The glass globe should be regularly inspected for scratches and chips, and if damaged, MUST be replaced.

Lubricating the Threaded Joint

The threaded joint on the cover should be kept well lubricated with a corrosion inhibiting grease such a petrolatum or soap-thickened mineral oil. If corrosive materials have accumulated on the threaded joints and cannot be removed with solvents, the parts should be discarded and replaced.

Getting Service, Assistance, and Parts

Please call the phone numbers listed below. For instruction manuals and information about related products, please go to http://www.federalsignal-indust.com.

Repair Service

Products returned for repair require a Return Authorization form. To obtain service for the product, please contact the Federal Signal Service Department at 708-534-4858.

Technical Assistance

For technical assistance, please call Technical Support at 708-534-3424, extension 5823.

Accessories and Replacement Parts

⚠ WARNING

EXPLOSION HAZARD—Substitution of components may impair suitability for Class I, Division 2.

Typical spare parts are listed in Table 6 on page 20. Due to certification, certain component parts are not available for field replacement. Units with this type of damage must be either replaced entirely or returned to Federal Signal for service.

To order accessories and replacement parts, please call Federal Signal Customer Support at 708-534-4756.

Table 5 Accessory

Description	Model
Hazardous Location Wall-Mount Bracket	LHWB*

** Cannot be used in Class II, Division 1 applications. NEMA 4X and IP66 rated when used with the appropriate conduit fittings.*

Table 6 Replacement parts

Description	Part Number
Dome Assy., Red	K8449078
Dome Assy., Amber	K8449078-01
Dome Assy., Clear	K8449078-04
Dome Assy., Blue	K8449078-06
Dome Assy., Green	K8449078-07
Dome Assy., Magenta	K8449078-05
Gasket	K8449080
Grease, 8 oz Tube	KR81-05-01
Dome Guard	K8449090
Power Supply Assy., 12-24 Vdc	K2001173
Power Supply Assy., 120 Vac	K2001071
Power Supply Assy., 240 Vac	K2001071-01
Flash Tube	K149122

Returning the Product for Credit

Product returns for credit require a return authorization from your local distributor prior to returning the product to Federal Signal. Please contact your distributor for assistance.

A product is qualified to be returned for credit when the following conditions are met:

- Product is resalable and in the original cartons
- Product has not been previously installed
- Product is the current revision
- Product has not been previously repaired
- Product is a standard product
- Product is not a service part

All returns are subject to a re-stock fee.

Defective products that are returned within the warranty period will be repaired or replaced at Federal Signal's sole discretion. Defective products do not include those products with lamp failure.

Circumstances other than those listed above will be addressed on a case-by-case basis.



FEDERAL SIGNAL
Safety and Security Systems / Industrial

Industrial Systems
2645 Federal Signal Drive • University Park, IL 60484-3167
Tel: 708-534-4756 • Fax: 708-534-4852
Email: elp@federalsignal.com • www.federalsignal-indust.com

© 2012 Federal Signal Corporation. All rights reserved.

FEDERAL SIGNAL CORPORATION



SelecTone® Hazardous Location Audible Signaling Device

Model 300GCX

DESIGNED FOR USE IN HAZARDOUS LOCATIONS

- Available in 24VAC/DC, 120VAC and 240VAC
- Reliable, solid-state circuitry
- Digital signal amplification
- Built-in gain control
- Fused input and output
- Produces 0dBa to 110dBa @ 10' (0dBa to 120dBa @ 1m)
- Type 4X enclosure
- External mounting tabs
- Indoor/outdoor use
- UL 1480 and CSFM Approved
- UL and cUL Listed

Federal Signal's Model 300GCX SelecTone® Speaker Amplifier is designed to produce tones, digital voice messages and live public address in harsh environments with high ambient noise levels.

The rugged speaker cone and projector are constructed of spun aluminum. The amplification circuitry, tone module, and gain control are contained in a housing constructed of die-cast aluminum. All surfaces are sealed with powder-coat paint. Dust- and moisture-proof gaskets provide protection from the elements.

The 300GCX is UL Listed for Class I, Division 2, Groups A, B, C and D; Class II, Division 2, Groups F & G, and Class III. It has been tested and approved for use in Type 4X applications.

Internal gain control allows output adjustment from 0dBa to a maximum of 110dBa at 10 feet.

SelecTone Speaker Amplifiers are used individually or as part of a plant-wide emergency notification system. The Model UTM Universal Tone Module, with 32 tones, or the TM33 Custom Tone Module is plugged into a single SelecTone Speaker Amplifier for stand-alone use or into a SelecTone Command Unit for plant-wide signaling.

For plant-wide signaling, a Connector Kit is installed into each SelecTone Speaker Amplifier and wired to a central controller, SelecTone Command Unit or CommCenter® Digital Message Center. Command Units and CommCenters broadcast tones, voice messages, melodies and live public address to an unlimited number of SelecTone Speaker Amplifiers.

Applications for SelecTone include emergency warning, evacuation, start/dismissal, public address, and process control signaling.

Model	Voltage	Operating Current	Standby Current	Decibels @ 10'	Decibels @ 1m	T-Code[1]
300GCX-024	24VDC	0.67 amps	50mA	110	120	T2B
300GCX-024	24VAC 50/60Hz	0.90 amps	100mA	110	120	T2B
300GCX-120	120VAC 50/60Hz	0.20 amps	30mA	110	120	T2B
300GCX-240	240VAC 50/60Hz	0.10 amps	15mA	110	120	T2B

[1] T-Code in Class 1 Division 2 A,B,C,D

5 yr FEDERAL SIGNAL WARRANTY

HAZARDOUS LOCATION AUDIBLE SIGNALING DEVICE (300GCX)

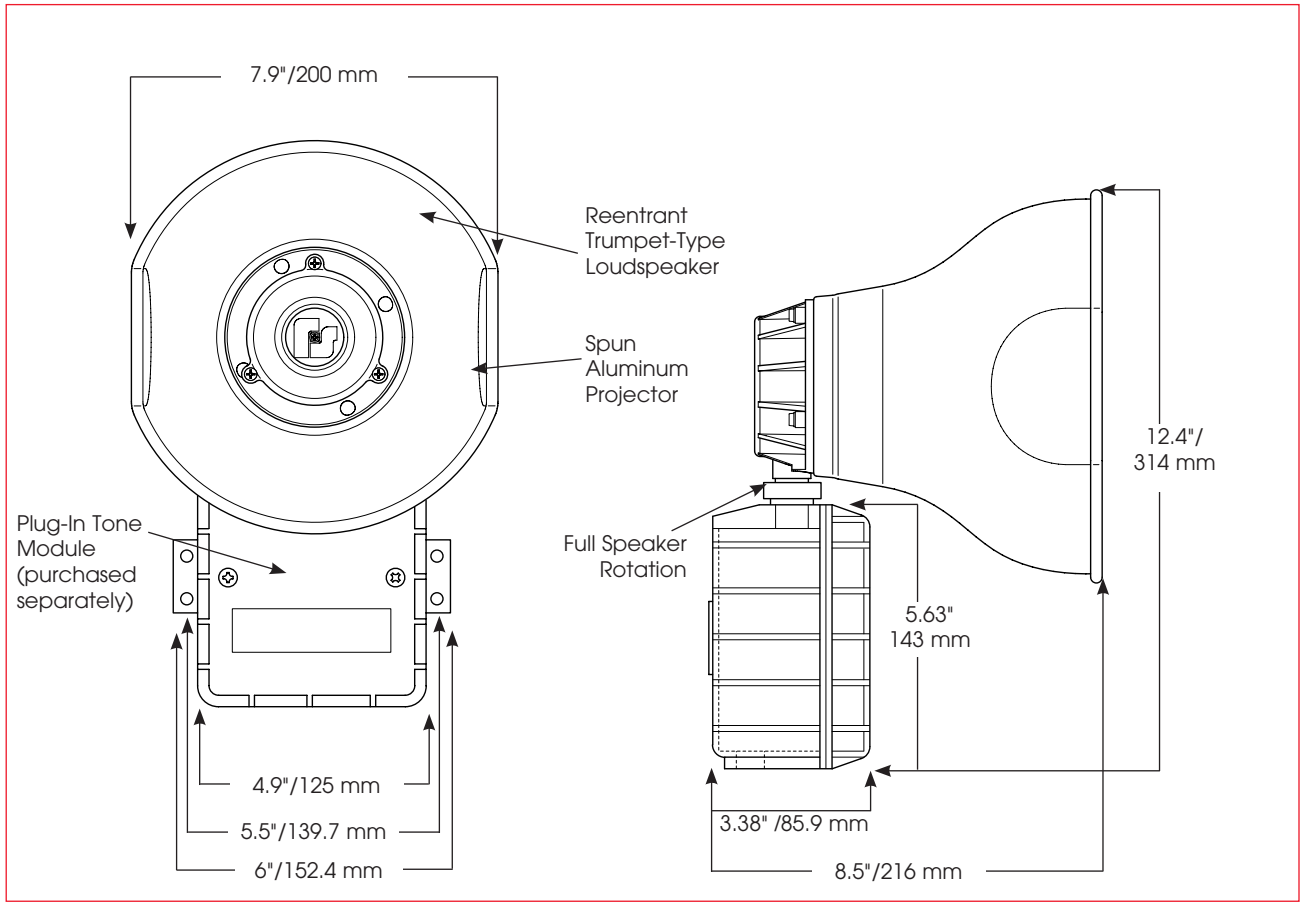

SPECIFICATIONS

Operating Temperature:	-67°F to 150°F	-55°C to 66°C
Net Weight:		
24VDC	4.9 lbs.	2.20 kg
120/240VAC	5.9 lbs.	2.70 kg
Shipping Weight:		
24VDC	6.1 lbs.	2.8 kg
120/240VAC	7.1 lbs.	3.2 kg
Height:	12.4"	314.0 mm
Width:	7.9"	200.0 mm
Depth:	8.5"	216.0 mm

REPLACEMENT PARTS

Description	***Part Number***
Amplifier Assembly, 24VAC/DC	K2005502A-04
Amplifier Assembly, 120/240VAC	K2005502A-04
Voice Coil	K8593035A
Transformer, 120VAC	K120857A
Transformer, 240VAC	K120858A
Speaker Assembly	K8593082A

HOW TO ORDER

- Specify model number and voltage
- Specify Tone Module for stand alone operation
  Universal Tone Module (UTM)
  Custom Tone Module (TM33)
- Specify Connector Kit for use in systems (Call factory for system design assistance)
  25 Vrms Connector Kit (AM25CK)
  70 Vrms Connector Kit (AM70CK)
- Please refer to Model Number Index 300GCX beginning on page 375

MODELS 300GC, 300GCX, 302GC, AND 302GCX

INSTALLATION AND SERVICE INSTRUCTIONS FOR SELECTONE® MODELS 300GC, 300GCX, 302GC, AND 302GCX

MODELOS 300GC, 300GCX, 302GC Y 302GCX

INSTRUCCIONES PARA LA INSTALACIÓN Y EL MANTENIMIENTO DE LOS MODELOS SELECTONE® 300GC, 300GCX, 302GC Y 302GCX

MODÈLES 300GC, 300GCX, 302GC ET 302GCX

CONSIGNES POUR L'INSTALLATION ET L'UTILISATION DES MODÈLES SELECTONE® 300GC, 300GCX, 302GC ET 302GCX

Address all communications and shipments to:
Dirija todas la correspondencia y enviós a:
Adressez toutes les communiations et expéditions à:

FEDERAL SIGNAL CORPORATION
Electrical Products Division
2645 Federal Signal Drive
University Park, IL 60466-3195

INSTALLATION AND SERVICE INSTRUCTIONS FOR MODELS 300GC, 300GCX, 302GC, AND 302GCX

⚠ SAFETY MESSAGE TO INSTALLERS

People's lives depend on your safe installation of our products. It is important to read, understand and follow all instructions shipped with these products. Listed below are some other important safety instructions and precautions you should follow:

- This unit must be installed by a qualified electrician in accordance with all National and Local Electrical Codes, and be acceptable to the Local Authority Having Jurisdiction.
- Do not connect this unit to the system wiring when circuits are energized.
- For optimum sound distribution do not install this device where objects would block any portion of the front of the speaker.
- All effective warning speakers produce loud sounds, which in certain circumstances, may cause permanent hearing loss. Take appropriate precautions such as wearing hearing protection. Recommendations in OSHA-Sound Level Standard (29 CFR 1910) should not be exceeded.
- After installation and completion of initial system test, provide a copy of this instruction sheet to all personnel responsible for operation, periodic testing, and maintenance of the equipment.

⚠WARNING

Failure to follow all safety precautions and instructions may result in property damage, serious injury, or death to you or others.

I. GENERAL.

These four SelecTone® Models are high output, continuous duty, indoor/outdoor rated audible signal/amplified speaker devices with internal gain controls. A plug-in tone module is required for tone generation. If the use of externally generated tones or voice signals from a remote amplifier is desired, the plug-in speaker connector cards may be used. See the specification section for compatible plug-in models. These models may also be used for playback of pre-recorded messages or tones when used with the Model TM-33 Custom Tone Module. The mounting bracket is adjustable to allow positioning to obtain desired sound coverage. Speaker projectors on all models are adjustable and may be repositioned to obtain desired sound distribution.

The SelecTone Models 300GCX and 302GCX are designed for use in areas where Flammable Gases, Vapors and Liquids and Combustible Dusts are not normally present, except for abnormal conditions as defined by the National Electrical Code. These models are suitable for use in Class I, Division 2, Groups A, B, C, & D; Class II, Division 2, Groups F and G; Class III or non-hazardous locations only. Reference the product nameplate for additional information.

II. SPECIFICATIONS.

Operating Voltages:	24V AC/DC, 120VAC, 240VAC	
Supervisor Voltage:	50VDC (When speaker plug-in module is installed.)	
Current Requirements:		
300GC & 300GCX:	24VAC - 1.1A max. 120VAC - 0.3A max.	24VDC - 1.1A max. 240VAC - 0.2A max.
302GC & 302GCX:	24VAC - 1.7A max. 120VAC - 0.4A max.	24VDC - 1.7A max. 240VAC - 0.2A max.

Weight	24V AC/DC	120VAC, 240VAC
300GC:	4.5 lbs. [2.0kg]	5.5 lbs. [2.5kg]
300GCX:	4.9 lbs. [2.2kg]	5.9 lbs. [2.7kg]
302GC:	6.1 lbs. [2.8kg]	7.5 lbs. [3.4kg]
302GCX:	6.5 lbs. [3.0kg]	7.9 lbs. [3.6kg]

Construction	
Amplifier Housing:	Die-cast aluminum alloy with powder coated finish. Housing sealed with a neoprene rubber gasket. External mounting bracket on Models 300GCX & 302GCX.
Speaker Cone Tip & Projector:	Spun aluminum alloy with powder coated finish.
Sound Level on Axis @ 10 feet [3m]:	300GC & 300GCX: 110dBA 302GC & 302GCX: 114dBA
Approval Agency Listings:	Refer to product nameplate
Compatible Tone Modules:	TM2, TM33*, or UTM * - Series A and B versions of the TM33 module are not compatible.
Compatible Speaker Connector Cards:	AM25CK*, AM70CK*, EM3, 300CK, E-300CK, T-300CK, or 300CKS * - Series A versions of these connector cards are not compatible.

III. INSTALLATION.

A. *Unpacking.*

After unpacking the speaker, examine it carefully for possible damage that may have occurred in transit. If equipment has been damaged, immediately file a claim with the carrier stating the extent of the damage. Carefully check all shipping labels and tags for special instructions before removing or destroying them.

B. *Mounting Arrangements (see figure 1).*

⚠CAUTION

To maintain the Hazardous Location ratings of the Models 300GCX and 302GCX enclosure, do not use the 7/8" knockout (concealed conduit mounting.)

The amplified speaker can be mounted on any relatively flat surface. Conduit connections can be made to the two 1/2" threaded openings at bottom of the housing. A 1/2" conduit plug is supplied for field installation if one of the 1/2" threaded openings is not utilized. After the mounting location and mounting method have been selected, proceed with the applicable instructions below.

⚠WARNING

Property damage, serious injury, or death could occur if an accumulation of water, snow, dust, etc. resides in the speaker projector, severely reducing or preventing operation of this device. Mount the unit so speaker projector is pointed horizontally or slightly downward.

⚠WARNING

Property damage, serious injury, or death could occur if the projector is mishandled during installation or over time. DO NOT rotate the projector more than 180 degrees or internal speaker wiring may be damaged.

1. Flat Surface Mounting.

a. Remove and retain the two screws that secure cover to housing. Remove the cover.

⚠WARNING

Property damage, serious injury, or death could occur if any objects are in front of the speaker, severely reducing optimum sound distribution. For maximum effectiveness, ensure that the front of the speaker is clear of obstructions.

b. Select the mounting location and place rear of the housing against mounting surface.

c. Using the mounting holes (two (2) inside for Models 300GC and 302GC's housing or four (4) outside for the Models 300GCX and 302GCX's external housing bracket) as a template, scribe drill position marks on the mounting surface. See figure 1 for mounting hole locations and dimensions.

⚠CAUTION

Before drilling holes in any surface, ensure that both sides of surface are clear of items that could be damaged.

d. Secure the unit to a wooden mounting surface with #10 x 1" wood screws. If mounting on a metal surface, drill 13/64" diameter holes and secure the unit with #10 screws, lockwashers and nuts.

e. Route wires through the 1/2" threaded openings into the SelecTone unit in accordance with National and Local Electrical codes. Wire size depends upon the operating current and the distance from the power source.

f. Reposition speaker projector if necessary to obtain desired sound coverage. Loosen collar nut (see figure 1) and move projector to desired position.

2. Concealed Conduit Mounting (300GC and 302GC Models ONLY).

a. Remove and retain the two screws that secure cover to housing. Remove the cover.

b. Remove the 7/8" knockout at rear of housing.

c. Install the conduit connection.

d. Route wires through the 1/2" threaded openings into the SelecTone unit in accordance with National and Local Electrical codes. Wire size depends upon the operating current and the distance from the power source.

e. Select the mounting location and place rear of housing against mounting surface.

f. Using the two (2) mounting holes as a template, scribe drill position marks on the mounting surface. See figure 1 for mounting hole locations and dimensions.

⚠CAUTION

Before drilling holes in any surface, ensure that both sides of surface are clear of items that could be damaged.

g. Secure the unit to a wooden mounting surface with #10 x 1" wood screws. If mounting on a metal surface, drill 13/64" diameter holes and secure the unit with #10 screws, lockwashers and nuts.

h. Reposition speaker projector if necessary to obtain desired sound coverage. Loosen collar nut (see figure 1) and move projector to desired position. Install 1/2" conduit plugs in the unused bottom entryways (one plug supplied).

C. *Electrical Connections.*

⚠ DANGER

To avoid electrical shock, do not connect wires when circuits are energized.

⚠WARNING

Never energize unit unless the cover is securely fastened to housing. Property damage, serious injury, or death could occur if the housing is not closed properly.

National and Local Electrical Codes must be adhered to in the installation and operation of these models. All electrical wiring must be routed through approved conduit and fittings as specified.

1. Power Connections.

Use only 12 to 18 AWG [2.5 – 1.0 mm2] wire for the power connection. Strip no more than .25 inch [6 mm] of wire insulation from the ends of the power leads. If stranded wire is used, be sure that there are no loose strands outside the connector plug that could touch the adjacent lead and cause a short circuit.

a. 24V AC/DC models.

For 24VDC operation, connect the power source positive (+) lead to one of the (+) terminals of the connector plug and connect the power source negative (-) lead to one of the (-) terminals of the connector plug as shown in figure 2. For 24VAC operation connect the line (hot) power source wire to the terminal marked "L". Connect the common (neutral) power source wire to the terminal marked "N". See figure 2. If required by local building codes, connect the earth ground wire to the green screw threaded into the interior of the housing.

b. 120VAC & 240VAC models.

Connect the line (hot) power source wire to the terminal marked "L". Connect the common (neutral) power source wire to the terminal marked "N". See figure 2. If required by local building codes, connect the earth ground wire to the green screw threaded into the interior of the housing.

Plug the connector into the receptacle provided on the printed circuit board.

2. Tone Card Installation.

NOTE

Tone card is purchased separately.

a. Plug the desired tone card into the socket as shown in figure 2.

b. To ensure a proper seal, be sure that the rubber cover gasket is properly seated in the housing groove and reinstall the housing cover.

3. Speaker Connector Card Installation (Models AM25CK, AM70CK, and 300CK).

NOTE

Connector card is purchased separately.

a. Route the audio signal leads into the enclosure and connect the signal leads to the connector card audio inputs. The connector cards are NOT polarity sensitive, however, polarity should be observed when placing units within close proximity to each other. Refer to the connector card installation manual provided with the connector card kit for additional wiring information.

b. Plug the desired connector card into the socket as shown in figure 2.

c. To ensure a proper seal, be sure that the rubber cover gasket is properly seated in the housing groove and reinstall the housing cover.

⚠WARNING

Property damage, serious injury, or death could occur if the housing is not closed properly. To reduce possibility of explosion, the housing cover must be kept tight while circuits are energized.

IV. TESTING/OPERATING.

⚠WARNING

These devices are capable of producing sounds loud enough to cause hearing damage. Adequate hearing protection should be worn if standing within close proximity to device while testing. Recommendations in the OSHA Sound Level Standard (29 CFR 1910F) should not be exceeded.

A. After installation is complete, be sure to test the system to verify that each amplified speaker operates satisfactorily. If it is found that the unit is too loud for its location, an internal volume control can be adjusted. Remove the housing cover. Using a slotted screwdriver with a 1/8" blade, gently turn control to desired loudness. See figure 2. Reinstall the housing cover.

B. After completion of initial system test, establish a program for periodic testing of this device.

C. Provide a copy of these instructions for the Safety Engineer, system operator(s) and maintenance personnel.

⚠ SAFETY MESSAGE TO OPERATORS

Even if your warning system is operating properly, it may not be completely effective. People may not hear or heed your warning signal. You must recognize this fact and ensure that your warning signal achieves its intended effect through proper test/training sequences within your specific application(s).

⚠WARNING - EXPLOSION HAZARD

Substitution of components may impair suitability for Class I, Division 2, and Class I, Zone 2.

V. MAINTENANCE.

⚠ SAFETY MESSAGE TO MAINTENANCE PERSONNEL

Failure to follow all safety precautions and instructions may result in property damage, serious injury, or death to you or others.

- Read and understand all instructions before performing maintenance on this unit.
- To reduce the risk of electrical shock or ignition of hazardous atmospheres, do not perform maintenance or service on this unit when circuits are energized.

- Periodic checks should be made to ensure that effectiveness of this device has not been reduced because speaker has become clogged with a foreign substance or because objects have been placed in front of the speaker.

- Any maintenance on this unit MUST be performed by a licensed electrician in accordance with NEC guidelines and local codes.

- Never alter these units in any manner. Note, additional openings or alterations made to the 300GCX or 302GCX Models may jeopardize the safety of the hazardous location.

- The nameplates, which contain cautionary or other information of importance to maintenance personnel, should not be obscured if the exterior of device is painted.

A. Periodically inspect this device to verify that there are no foreign substances in, or in front of the speaker, which will reduce its notification effectiveness.

B. Periodic evaluation on the performance of the unit should be conduct at regular intervals.

C. In the event a volume adjustment or other repair is required, be sure to refer to the Safety Message For Maintenance Personnel before proceeding.

⚠WARNING

Unauthorized repair/servicing of the unit may result in degradation of performance and/or safety, resulting in property damage, serious injury, or death to you or others. If a malfunctioning unit is encountered, do not attempt any field repair/retrofit of parts.

VI. SERVICE.

Federal Signal will service your equipment or provide technical assistance with any problems that cannot be handled locally.

Any units returned to Federal Signal for service, inspection, or repair, must be accompanied by a Return Material Authorization. This R.M.A. can be obtained from the local Distributor or Manufacturer's Representative.

At this time a brief explanation of the service requested or the nature of the malfunction, should be provided.

Address all communications and shipments to:

Federal Signal Corporation
Electrical Products Division
Service Department
2645 Federal Signal Drive
University Park, IL 60466-3195

VII. REPLACEMENT PARTS (Series D).

Description	Part Number
Amplifier Sub-assy., 300GC-024, 300GCX-024	K2005356A-05
Amplifier Sub-assy., 300GC-120, 300GCX-120, 300GC-240, and 300GCX-240	K2005356A-04
Amplifier Sub-assy., 302GC-024, 302GCX-024	K2005356A-03
Amplifier Sub-assy., 302GC-120, 302GCX-120, 302GC-240, and 302GCX-240	K2005356A-02
Amplifier Power Board., 300GC-024, 300GCX-024	K2001961A-05
Amplifier Power Board, 300GC-120, 300GCX-120, 300GC-240, and 300GCX-240	K2001961A-04
Amplifier Power Board, 302GC-024, 302GCX-024	K2001961A-03
Amplifier Power Board, 302GC-120, 302GCX-120, 302GC-240, and 302GCX-240	K2001961A-02
Speaker, 300GC-024, 300GCX-024, 300GC-120, 300GCX-120, 300GC-240, and 300GCX-240	8593082A
Speaker, 302GC-024, 302GCX-024, 302GC-120, 302GCX-120, 302GC-240, and 302GCX-240	8593103A
Transformer, 300GC-120, 300GCX-120	K120857A
Transformer, 300GC-240, 300GCX-240	K120858A
Transformer, 302GC-120, 302GCX-120	K120846A
Transformer, 302GC-240, 302GCX-240	K120856A
Voice Coil, 300GC-120, 300GCX-120, 300GC-240, and 300GCX-240	K8593035A
Voice Coil, 302GC-120, 302GCX-120, 302GC-240, and 302GCX-240	K8590246A

INSTRUCCIONES PARA LA INSTALACIÓN Y EL MANTENIMIENTO DE LOS MODELOS 300GC, 300GCX, 302GC Y 302GCX

⚠ MENSAJE DE SEGURIDAD PARA LOS INSTALADORES

La vida de personas depende de la instalación segura de nuestros productos. Es importante leer, comprender y seguir todas las instrucciones que vienen con estos productos. A continuación indicamos otras instrucciones importantes y precauciones de seguridad que debe seguir:

- Esta unidad debe ser instalada por un electricista calificado en conformidad con los Códigos Nacionales y Locales de Electricidad y aceptado por la autoridad local a la que corresponda la jurisdicción.

- No conecte esta unidad al cableado del sistema mientras los circuitos estén energizados.

- Para obtener una distribución óptima del sonido, no instale este dispositivo en lugares donde haya objetos que puedan obstruir cualquier porción de la parte delantera del altavoz.

- Todos los altavoces eficaces de alarma producen sonidos fuertes que pueden causar, en ciertas situaciones, la pérdida permanente de la audición. Tome las precauciones apropiadas como, por ejemplo, usar protección para los oídos. No se deben exceder las recomendaciones especificadas en la Norma de nivel de sonido (29 CFR 1910) de OSHA.

- Después de hacer la instalación y la prueba inicial del sistema, entregue una copia de estas instrucciones a todas las personas responsables de la operación, de las pruebas periódicas y del mantenimiento de estos equipos.

⚠ ADVERTENCIA

Si no se siguen todas las precauciones e instrucciones de seguridad, pueden ocasionarse daños a la propiedad o se pueden causar lesiones graves o mortales a usted o a otras personas.

I. GENERAL.

Estos cuatro modelos SelecTone® son dispositivos altavoces amplificados de alta potencia con controles internos de ganancia y señal audible nominal para servicio continuo en áreas interiores y exteriores. Es necesario un módulo enchufable para la generación de tonos. Si desea usar tonos generados externamente o señales de voz de un amplificador remoto, puede usar las tarjetas de conexión enchufables para altavoces. Consulte en la sección Especificaciones los modelos enchufables compatibles. Estos modelos también se pueden utilizar para reproducir mensajes o tonos grabados con anterioridad cuando se utilizan con el módulo de tonos personalizados (Custom Tone Module) modelo TM-33. El soporte de montaje es ajustable para permitir el cambio de posición y obtener la cobertura de sonido deseada. Los proyectores del altavoz de todos los modelos son ajustables y su posición se puede cambiar para obtener la distribución de sonido deseada.

Los modelos de SelecTone 300GCX y 302GCX están diseñados para su uso en áreas donde normalmente no hay presencia de gases, vapores o líquidos inflamables ni polvos combustibles, exceptuando las condiciones anormales que se definen en el Código Eléctrico Nacional. Estos modelos son adecuados para ser usados solamente en áreas Clase I, División 2, Grupos A, B, C y D; Clase II, División 2, Grupos F y G; Clase III o en áreas no peligrosas. Use como referencia la placa de identificación del producto para obtener información adicional.

II. ESPECIFICACIONES

Voltajes de operación:	24VCC, 24VCA, 120VCA, 240VCA	
Voltaje de referencia: está instalado).	50VCC (cuando el módulo enchufable del altavoz	
Requisitos de corriente:		
300GC y 300GCX:	24VCA - 1,1Amp máx. 120VCA - 0,3Amp máx.	24VCC - 1,1Amp máx. 240VCA - 0,2Amp máx.
302GC y 302GCX:	24VCA - 1,7Amp máx. 120VCA - 0,4Amp máx.	24VCC - 1,7Amp máx. 240VCA - 0,2Amp máx.

Peso	24VCC, 24VCA	120VCA, 240VCA
300GC:	4,5 lbs. [2,0kg]	5,5 lbs. [2,5kg]
300GCX:	4,9 lbs. [2,2kg]	5,9 lbs. [2,7kg]
302GC:	6,1 lbs. [2,8kg]	7,5 lbs. [3,4kg]
302GCX:	6,5 lbs. [3,0kg]	7,9 lbs. [3,6kg]

Construcción Caja del amplificador:	Aleación de aluminio fundido con acabado de pintura en polvo. Caja sellada con una empaquetadura de caucho neopreno. Soporte de montaje externo en los modelos 300GCX y 302GCX.
Punta del cono y proyector del altavoz:	Aleación de aluminio trenzado con acabado de pintura en polvo.
Nivel de sonido en el eje a 10 pies [3 m]:	300GC y 300GCX: 110dBA 302GC y 302GCX: 114dBA
Lista de agencias aprobatorias:	Consulte la placa de identificación del producto
Módulos de tono compatibles:	TM2, TM33* o UTM * - Las versiones de las Series A y B del módulo TM33 no son compatibles.
Tarjetas de conexión de altavoz compatibles:	AM25CK*, AM70CK*, EM3, 300CK, E-300CK, T-300CK o 300CKS * - Las versiones de la Serie A de estas tarjetas de conexión no son compatibles.

III. INSTALACIÓN.

A. *Desempaque*

Después de desempacar el altavoz, revíselo cuidadosamente para detectar cualquier daño que pueda haber ocurrido durante su transporte. Si el equipo está dañado, presente inmediatamente una reclamación al transportador indicando la magnitud del daño. Revise cuidadosamente todos los sellos de embarque y las etiquetas para ver si hay alguna instrucción especial antes de quitarlos o destruirlos.

B. *Configuración del montaje (vea la Figura 1).*

⚠PRECAUCION

Para mantener la clasificación para Áreas de Alto Riesgo de la caja de los modelos 300GCX y 302GCX, no use la abertura rompible de 7/8 de pulg (montaje de conducto oculto).

El altavoz amplificado se puede montar en cualquier superficie relativamente plana. Las conexiones del conducto se pueden hacer a las dos aberturas roscadas de 1/2 pulg en la parte inferior de la caja. Se suministra un tapón de conducto de 1/2 pulg para la instalación en el campo si no se utiliza alguna de las aberturas roscadas de 1/2 pulg. Después de seleccionar la ubicación y el método de montaje, proceda con las instrucciones descritas abajo que sean aplicables.

⚠ADVERTENCIA

Pueden ocasionarse daños a la propiedad o lesiones graves o mortales si se acumula agua, nieve, polvo, etc. en el proyector del altavoz, reduciendo significativamente o impidiendo la operación de este dispositivo. Monte la unidad de tal manera que el proyector del altavoz se oriente horizontalmente o un poco hacia abajo.

⚠ADVERTENCIA

Pueden ocasionarse daños a la propiedad o lesiones graves o mortales si el proyector es maltratado durante o después de la instalación. NO gire el proyector más de 180 grados porque pueden ocasionarse daños a los cables internos del altavoz.

1. Montaje en una superficie plana.

a. Quite y retenga los dos tornillos que sujetan la tapa a la caja. Quite la tapa.

⚠ADVERTENCIA

Pueden ocasionarse daños a la propiedad o lesiones graves o mortales si hay algún objeto delante del altavoz, reduciendo significativamente la distribución óptima del sonido. Para obtener la mayor efectividad, asegúrese de que no hay ninguna obstrucción delante del altavoz.

b. Seleccione la ubicación del montaje y coloque la parte trasera de la caja contra la superficie de montaje.

c. Utilice los orificios de montaje (dos (2) en el interior para la caja de los modelos 300GC y 302GC o cuatro en el exterior (4) para el soporte externo de la caja de los modelos 300GCX y 302GCX) como una plantilla para marcar la posición en la superficie de montaje donde se debe perforar. Vea la Figura 1 para obtener la ubicación y las dimensiones de los orificios de montaje.

⚠PRECAUCION

Antes de perforar los orificios, asegúrese de que no hay nada que se pueda dañar en los dos lados de la superficie.

d. Sujete la unidad en una superficie de montaje de madera con tornillos para madera #10 x 1 pulg. Cuando instale la unidad en superficies metálicas, perfore orificios de 13/64 pulg de diámetro en las posiciones marcadas y sujete la unidad con tornillos #10, arandelas de presión y tuercas.

e. Pase los cables a través de las aberturas roscadas de 12 pulg hacia la unidad SelecTone en conformidad con los Códigos Nacionales y Locales de Electricidad. El tamaño de los cables depende de la corriente que se está utilizando y la distancia a la fuente de energía.

f. Cambie la posición del proyector del altavoz si es necesario para obtener la cobertura de sonido deseada. Afloje la tuerca de collar (vea la Figura 1) y mueva el proyector a la posición deseada.

2. Montaje de conducto oculto (SÓLO en los modelos 300GC y 302GC).

a. Quite y retenga los dos tornillos que sujetan la tapa a la caja. Quite la tapa.

b. Quite la abertura rompible de 7/8 pulg en la parte trasera de la caja.

c. Instale la conexión del conducto.

d. Pase los cables a través de las aberturas roscadas de 12 pulg hacia la unidad SelecTone en conformidad con los Códigos Nacionales y Locales de Electricidad. El tamaño de los cables depende de la corriente que se está utilizando y la distancia a la fuente de energía.

e. Seleccione la ubicación del montaje y coloque la parte trasera de la caja contra la superficie de montaje.

f. Use los dos orificios de montaje (2) como una plantilla para marcar la posición en la superficie de montaje donde se debe perforar. Vea la Figura 1 para obtener la ubicación y las dimensiones de los orificios de montaje.

⚠PRECAUCION

Antes de perforar los orificios, asegúrese de que no hay nada que se pueda dañar en los dos lados de la superficie.

g. Sujete la unidad en una superficie de montaje de madera con tornillos para madera #10 x 1 pulg. Cuando instale la unidad en superficies metálicas, perfore orificios de 13/64 pulg de diámetro en las posiciones marcadas y sujete la unidad con tornillos #10, arandelas de presión y tuercas.

h. Cambie la posición del proyector del altavoz si es necesario para obtener la cobertura de sonido deseada. Afloje la tuerca de collar (vea la Figura 1) y mueva el proyector a la posición deseada. Instale tapones de conducto de 1/2 pulg en las entradas inferiores que no se usen (se suministra un tapón).

C. *Conexiones eléctricas.*

⚠ PELIGRO

Para evitar una descarga eléctrica, no conecte los cables cuando el sistema está energizado.

⚠ADVERTENCIA

Nunca energice la unidad a menos que la tapa esté sujetada firmemente a la caja. Pueden ocasionarse daños a la propiedad o lesiones graves o mortales si no se cierra correctamente la caja.

Se deben cumplir los Códigos Nacionales y Locales de Electricidad para la instalación y operación de estos modelos. Todos los cables eléctricos debe tenderse por un conducto aprobado y usando los conectores aprobados de acuerdo a las especificaciones.

1. Conexiones de energía.

Utilice sólo cables de 12 a 18 AWG (2,5 – 1,0 mm2) para las conexiones de energía. No quite más de 0,25 pulg (6 mm) de aislamiento de cable del extremo de los conductores de energía. Si utiliza cable trenzado, asegúrese de que no hay ninguna trenza suelta por fuera del enchufe conector que pueda entrar en contacto con un conductor adyacente y causar un corto circuito.

a. Modelos de 24V CA/CC.

Para la operación a 24VCC, conecte el conductor positivo de la fuente de potencia a uno de los terminales positivos (+) del enchufe conector y el conductor negativo a uno de los terminales negativos (-) del enchufe conector, como se muestra en la Figura 2. Para la operación de 24VCA, conecte el cable de línea (caliente) de la fuente de energía al terminal marcado con la letra "L". Conecte el cable común (neutral) de la fuente de energía al terminal marcado con la letra "N". Vea la Figura 2. Si los códigos de construcción locales lo exigen, conecte el cable de conexión a tierra al tornillo roscado verde en el interior de la caja.

b. Modelos de 120VCA y 240VCA.

Conecte el cable de línea (caliente) de la fuente de energía al terminal marcado con la letra "L". Conecte el cable común (neutral) de la fuente de energía al terminal marcado con la letra "N". Vea la Figura 2. Para la operación a 24V CA, conecte el cable de línea (caliente) de la fuente de energía al terminal marcado con la letra "L".

Conecte el conector al receptáculo proporcionado en la tarjeta del circuito impreso.

2. Instalación de la tarjeta de tono

NOTA

La tarjeta de tono se compra separadamente.

a. Instale la tarjeta de tono deseada en el receptáculo como se muestra en la Figura 2.

b. Para obtener un sellado correcto, asegúrese de que la empaquetadura de goma de la tapa se asiente correctamente en la ranura de la caja e instale de nuevo la tapa de la caja.

3. Instalación de la tarjeta de conexión del altavoz (modelos AM25CK, AM70CK y 300CK).

NOTA

La tarjeta de conexión se compra separadamente.

a. Pase los conductores de señal de audio al interior de la caja y conecte los conductores de señal a las entradas del conector de la tarjeta de audio. Las tarjetas de conexión NO son susceptibles a la polaridad; sin embargo, se debe observar la polaridad cuando se coloca una unidad muy cerca de otra. Consulte el manual de instalación de la tarjeta de conexión que se proporciona con el juego de tarjetas de conexión para obtener más información acerca del cableado.

b. Conecte la tarjeta de conexión deseada en el receptáculo, como se muestra en la Figura 2.

c. Para obtener un sellado correcto, asegúrese de que la empaquetadura de goma de la tapa se asiente correctamente en la ranura de la caja e instale de nuevo la tapa de la caja.

⚠ADVERTENCIA

Pueden ocasionarse daños a la propiedad o lesiones graves o mortales si no se cierra correctamente la caja. Para disminuir la posibilidad de una explosión, la tapa de la caja debe mantenerse ajustada mientras el sistema está energizado.

IV. PRUEBA/OPERACIÓN.

⚠ADVERTENCIA

Estos dispositivos tienen la capacidad de producir sonidos lo suficientemente fuertes para causar daños al oído. Debe usar protección adecuada para los oídos si está cerca del dispositivo mientras se está probando. No se deben exceder las recomendaciones especificadas en la Norma de nivel de sonido (29 CFR 1910F) de OSHA.

A. Después de completar la instalación, asegúrese de probar el sistema para verificar que cada altavoz amplificado está funcionando correctamente. Si la unidad produce sonidos demasiado fuertes para el lugar donde está ubicada, se puede ajustar el control de volumen interno. Quite la tapa de la caja. Utilizando un atornillador acanalado con una hoja de 1/8 pulg, gire suavemente el control al nivel de volumen deseado. Vea la Figura 2. Instale de nuevo la tapa de la caja.

B. Después de la instalación y la prueba inicial del sistema, se debe establecer un programa de pruebas periódicas para este dispositivo.

C. Entregue una copia de estas instrucciones al ingeniero de seguridad, a los operadores del sistema y al personal de mantenimiento.

⚠ MENSAJE DE SEGURIDAD PARA LOS OPERADORES

Aunque su sistema de advertencia esté funcionando correctamente, es posible que no sea completamente efectivo. Es posible que las personas no escuchen o no hagan caso de su señal de advertencia. Debe reconocer este hecho y asegurarse de que su señal de advertencia cumple el efecto deseado realizando secuencias de pruebas y de entrenamiento para sus aplicaciones específicas.

⚠ADVERTENCIA - PELIGRO DE EXPLOSIÓN

La sustitución de componentes puede deteriorar la idoneidad para Clase I, División 2 y Clase I, Zona 2.

V. MANTENIMIENTO.

⚠ MENSAJE DE SEGURIDAD PARA EL PERSONAL DE MANTENIMIENTO

Si no se siguen todas las precauciones e instrucciones de seguridad, pueden ocasionarse daños a la propiedad o se pueden causar lesiones graves o mortales a usted o a otras personas.

- Lea y comprenda todas las instrucciones antes de realizar trabajos de mantenimiento en esta unidad.

- Para disminuir el riesgo de descargas eléctricas o de incendios en atmósferas de alto riesgo, no realice trabajos de mantenimiento en este dispositivo mientras el sistema está energizado.

- Se deben hacer revisiones periódicas para asegurar que la efectividad del dispositivo no ha disminuido debido a obstrucciones en el altavoz causadas por sustancias extrañas o porque se hayan colocado objetos delante del altavoz.

- Todos los trabajos de mantenimiento en esta unidad DEBEN ser realizados por un electricista capacitado en conformidad con el Código Eléctrico Nacional y con los códigos locales.

- Nunca altere estas unidades de ninguna manera. Tenga en cuenta que las aberturas adicionales y las alteraciones a los modelos 300GCX o 302GCX pueden poner en peligro la seguridad en áreas de alto riesgo.

- Las placas de identificación, que pueden contener precauciones o información de importancia para el personal de mantenimiento, no se deben cubrir con pintura cuando se pinta el exterior del dispositivo.

A. Inspeccione periódicamente este dispositivo para verificar que no hay sustancias extrañas en o delante del altavoz que puedan disminuir la efectividad anunciada.

B. Se deben realizar evaluaciones periódicas del rendimiento de la unidad.

C. Si es necesario ajustar el volumen o realizar alguna reparación, asegúrese de consultar el Mensaje de seguridad para el personal de mantenimiento antes de proceder.

⚠ADVERTENCIA

Si se hacen trabajos de mantenimiento y reparación que no están autorizados, se puede ocasionar la degradación del rendimiento y de la seguridad de la unidad, con la posibilidad de causar daños a la propiedad y lesiones graves o mortales a usted o a otras personas. Si tiene una unidad averiada, no intente reparar ni adaptar ninguna de las piezas.

VI. SERVICIO.

Federal Signal reparará su equipo o le prestará asistencia técnica con cualquier problema que no pueda corregirse localmente.

Todas las unidades devueltas a Federal Signal para su mantenimiento, inspección o reparación deben enviarse con una Autorización de Devolución de Materiales R.M.A. Esta R.M.A. puede obtenerse de su distribuidor local o del representante del fabricante.

En ese momento se le pedirá una breve explicación del servicio solicitado o la naturaleza del desperfecto.

Dirija toda su correspondencia y todos sus envíos a:

Federal Signal Corporation
Electrical Products Division
Service Department
2645 Federal Signal Drive
University Park, IL 60466-3195

VII. COMPONENTES DE REEMPLAZO (Serie D).

Descripción	Número de parte
Subconjunto de amplificador, 300GC-024, 300GCX-024	K2005356A-05
Subconjunto de amplificador, 300GC-120, 300GCX-120, 300GC-240 y 300GCX-240	K2005356A-04
Subconjunto de amplificador, 302GC-024, 302GCX-024	K2005356A-03
Subconjunto de amplificador, 302GC-120, 302GCX-120 302GC-240 y 302GCX-240	K2005356A-02
Tablero de alimentación del amplificador, 300GC-024, 300GCX-024	K2001961A-05
Tablero de alimentación del amplificador, 300GC-120, 300GCX-120 300GC-240 y 300GCX-240	K2001961A-04
Tablero de alimentación del amplificador, 302GC-024, 302GCX-024	K2001961A-03
Tablero de alimentación del amplificador, 302GC-120, 302GCX-120 302GC-240 y 302GCX-240	K2001961A-02
Altavoz, 300GC-024, 300GCX-024, 300GC-120, 300GCX-120, 300GC-240 y 300GCX-240	8593082A
Altavoz, 302GC-024, 302GCX-024, 302GC-120, 302GCX-120, 302GC-240 y 302GCX-240	8593103A
Transformador, 300GC-120, 300GCX-120	K120857A
Transformador, 300GC-240, 300GCX-240	K120858A
Transformador, 302GC-120, 302GCX-120	K120846A
Transformador, 302GC-240, 302GCX-240	K120856A
Bobina de voz, 300GC-120, 300GCX-120, 300GC-240 y 300GCX-240	K8593035A
Bobina de voz, 302GC-120, 302GCX-120, 302GC-240 y 302GCX-240	K8590246A

CONSIGNES POUR L'INSTALLATION ET L'UTILISATION DES MODÈLES 300GC, 300GCX, 302GC ET 302GCX

⚠ MESSAGE DE SÉCURITÉ POUR LES INSTALLATEURS

Des vies humaines dépendent de l'installation sans danger que vous faites de nos produits. Il est important de lire, de comprendre et de suivre toutes les consignes jointes à ces produits. De plus, sont énumérées ci-dessous quelques autres consignes et mesures de sécurité importantes à suivre :

- Un électricien qualifié doit installer cette unité conformément aux codes électriques national et locaux; l'autorité ayant juridiction doit l'accepter.
- Ne pas brancher cette unité au système quand celui-ci est sous tension.
- Pour une répartition optimale du son, ne pas installer cet appareil là où des objets feraient obstacle à l'avant du haut-parleur.
- Tous les haut-parleurs d'avertissement efficaces produisent des sons puissants qui, dans certaines situations, peuvent causer une perte auditive permanente. Vous devez prendre des précautions adéquates comme le port d'une protection auditive. Il ne faut pas dépasser les recommandations de la norme de niveau sonore (29 CFR 1910) de l'OSHA.
- Après l'installation et l'exécution d'un premier essai du système, fournir une copie de cette feuille de consignes à tout le personnel responsable du fonctionnement, des essais périodiques et de l'entretien de cet équipement.

⚠ AVERTISSEMENT

Le non respect de toutes les mesures et consignes de sécurité pourrait entraîner des dommages aux biens, de sérieuses blessures ou la mort pour vous ou d'autres

I. GÉNÉRALITÉS.

Ces quatre modèles SelecTone® sont des haut-parleurs à sortie élevée, à service continu, amplifiés/à signal audible homologué intérieur/extérieur avec réglages internes de puissance de son. Un module enfichable de tonalité est requis pour la génération de tonalité. Pour des tonalités générées à l'extérieur ou des signaux vocaux à partir d'un amplificateur à distance, vous pouvez utiliser les cartes de connecteur enfichables. Voir les modèles enfichables compatibles au chapitre spécification. Vous pouvez aussi vous servir de ces modèles pour la lecture de messages ou de tonalités préenregistrées avec le module à tonalités personnalisées modèle TM-33. Le support de fixation est réglable pour placer l'appareil de façon à obtenir la couverture sonore désirée. Sur tous les modèles, les cornets de haut-parleurs sont réglables et peuvent être repositionnés pour obtenir la diffusion de son désirée.

Les modèles SelecTone 300GCX et 302GCX sont conçus pour servir dans des aires où des gaz, vapeurs et liquides inflammables et des poussières combustible ne sont pas présents normalement, excepté dans des conditions anormales telles que définies par le Code électrique national. Ces modèles conviennent seulement pour les endroits de classe I, division 2, groupes A, B, C, et D; classe II, division 2, groupes F et G; classe III ou sans danger. Se reporter à la plaque signalétique du produit pour plus d'information

II. SPÉCIFICATIONS

Tensions de fonctionnement :	24 V CA/CC, 120 V CA, 240 V CA	
Tension du superviseur :	50 V CC (Quand le module enfichable du haut-parleur est installé.)	
Courants exigés :		
300GC et 300GCX:	24 V CA - 1,1 A max.	24 V CC - 1,1 A max.
	120 V CC - 0,3 A max.	240 V CA - 0,2 A max.
302GC & 302GCX:	24 V CA - 1,7 A max.	24 V CC - 1,7 A max.
	120 V CC - 0,3 A max.	240 V CA - 0,2 A max.
24V 24 V CA/CC, 120 V CA, 240 V CA		
300GC:	2 kg [4,5 lb]	2,5 kg [5,5 lb]
300GCX:	2,2 kg [4,9 lb]	2,7 kg [5,9 lb]
302GC:	2,8 kg [6,1 lb]	3,4 kg [7,5 lb]
302GCX:	3 kg [6,5 lb]	3,6 kg [7,9 lb]
Construction du boîtier d'amplificateur :	Fonte d'alliage d'aluminium avec fini de revêtement en poudre Boîtier scellé par un joint de néoprène Support de montage externe sur les modèles 300GCX et 302GCX.	
Bout du cône diffuseur et cornet du haut-parleur :	Alliage d'aluminium avec fini de revêtement en poudre.	
Niveau sonore (sur l'axe @ 3m [10 pi]) :	300GC et 300GCX : 11O dBA 302GC et 302GCX : 114 dBA	
Listes d'homologation :	Se reporter à la plaque signalétique du produit	
Modules compatibles de tonalité :	TM2, TM33*, ou UTM *** - Les versions Séries A et B du module TM33** ne sont pas compatibles.	
Cartes de connecteur compatibles avec le haut-parleur :	AM25CK*, AM70CK*, EM3, 300CK, E-300CK, T-300CK, ou 300CKS	

* - Les versions de série A de ces cartes de connecteur ne sont pas compatibles.

III. INSTALLATION.

A. *Déballage.*

Après avoir déballé le haut-parleur, vérifier soigneusement s'il a été endommagé lors du transport. Si l'équipement a été endommagé, faire immédiatement au transporteur une réclamation déclarant l'étendue des dommages. Examiner soigneusement toutes les étiquettes d'expédition et de consignes particulières avant de les enlever ou de les détruire.

B. *Dispositions de Montage (Voir figure 1)*

⚠ ATTENTION

Pour maintenir la classification pour endroits dangereux des modèles d'enceinte300GCX et 302GCX, ne pas utiliser l'entrée défonçable de 7/8 po (montage à conduit caché).

Le haut-parleur peut être fixé sur une surface relativement plane capable de supporter son poids. Les conduits de câbles peuvent être raccordés aux ouvertures taraudées de 1/2 po situées à la base du boîtier Un bouchon de conduit de 1/2" est fourni pour l'installation si une des ouvertures taraudées de 1/2 po n'est pas utilisée. Après avoir choisi emplacement et la méthode de montage, procéder selon les consignes applicables suivantes.

⚠ AVERTISSEMENT

Il pourrait arriver des dommages aux biens, des blessures sérieuses ou la mort si de l'eau, de la neige, de la poussière, etc. s'accumulent dans le cornet du haut parleur, réduisant gravement ou empêchant le fonctionnement de cet appareil. Fixer l'unité pour que le cornet du haut-parleur soit dirigé horizontalement ou légèrement vers le bas.

⚠ AVERTISSEMENT

Il pourrait arriver des dommages aux biens, des blessures sérieuses ou la mort si le cornet est manipulé sans précaution lors de l'installation ou postérieurement. NE PAS faire pivoter le cornet de plus de 180 degrés afin de ne pas endommager le câblage intérieur du haut-parleur.

1. Montage sur Surface Plane.

a. Retirer et garder les deux vis qui fixent le couvercle au boîtier. Retirer le boîtier.

⚠ AVERTISSEMENT

Il pourrait arriver des dommages aux biens, des blessures sérieuses ou la mort si des objets se trouvaient devant le haut-parleur, réduisant gravement la répartition optimale du son. Pour une efficacité maximale, faire en sorte qu'il n'y ait aucune obstruction à l'avant du haut-parleur.

b. Choisir l'emplacement de montage et placer l'arrière du boîtier contre la surface de montage.

c. Se servir des trous de montage (deux [2] à l'intérieur du boîtier des modèles 300GC et 302GC ou quatre [4] dans le support de montage externe des modèles 300GCX et 302GCX) comme gabarit, pour marquer les positions de perçage sur la surface de montage. Voir la figure 1 pour l'emplacement des trous de fixation et leurs dimensions.

⚠ ATTENTION

Avant de percer des trous sur une surface, s'assurer que ses deux faces sont exemptes de quoi que ce soit qui pourrait être endommagé.

d. Fixer l'appareil à une surface de bois avec des vis à bois de 1 po No 10. En cas de montage sur une surface métallique, percer des trous de 13/64" de diamètre et fixer l'appareil avec des boulons No 10, des rondelles-frein et des écrous.

e. Passer les fils par les ouvertures taraudées d'1/2 po dans l'appareil SelecTone conformément aux codes électriques national et locaux. Le calibre du fil dépend du courant de fonctionnement et de la distance de la source d'alimentation

f. Repositionner le cornet du haut-parleur si nécessaire pour obtenir la couverture sonore désirée. Desserrer l'écrou à embase (voir figure 1) et déplacer le cornet jusqu'à la position désirée.

2. Montage avec Conduit Caché (Modèles 300GC et 302GC SEULEMENT).

a. Retirer et garder les deux vis qui fixent le couvercle au boîtier. Retirer le boîtier.

b. Retirer l'entrée défonçable de 7/8" à l'arrière du boîtier.

c. Installer le raccord de conduit.

d. Passer les fils par les ouvertures taraudées d'1/2 po dans l'appareil SelecTone conformément aux codes électriques national et locaux. Le calibre du fil dépend du courant de fonctionnement et de la distance de la source d'alimentation

e. Choisir l'emplacement de montage et placer l'arrière du boîtier contre la surface de montage.

f. À l'aide du support de fixation comme gabarit, marquer la position des trous à percer sur la surface de fixation. Voir la figure 1 pour l'emplacement des trous de fixation et leurs dimensions.

⚠ ATTENTION

Avant de percer des trous sur une surface, s'assurer que ses deux faces sont exemptes de tout élément qui pourrait être endommagé.

g. Fixer l'appareil à une surface de bois avec des vis à bois de 1 po No 10. En cas de montage sur une surface métallique, percer des trous de 13/64" de diamètre et fixer l'appareil avec des boulons No 10, des rondelles-frein et des écrous.

h. Repositionner le cornet du haut-parleur si nécessaire pour obtenir la couverture sonore désirée. Desserrer l'écrou à embase (voir figure 1) et déplacer le cornet jusqu'à la position désirée. Installer des bouchons de conduits de 1/2" dans les entrées non utilisées (un bouchon fourni).

C. *Connexions électriques*

⚠ DANGER

Pour éviter un choc électrique, ne pas connecter de fils quand les circuits sont sous tension.

⚠ AVERTISSEMENT

Ne jamais mettre l'appareil sous tension si le couvercle n'est pas bien fixé sur le boîtier. Il pourrait arriver des dommages aux biens, des blessures sérieuses ou la mort si le boîtier n'est pas bien fermé.

Il faut suivre le code électrique national ainsi que les codes locaux pour l'installation de ces modèles. Tout le câblage électrique doit passer par les conduits et les raccords homologués tel que spécifié.

1. Connexions à l'alimentation

Utiliser seulement un fil de calibre 12 a 18 AWG (2.5 – 1.0 mm2) pour la connexion à l'alimentation. Ne pas dénuder plus de 6 mm (25 po) de fil aux extrémités des conducteurs. Si vous utiliser du fil toronné, assurez-vous qu'il n'y a pas de toron flottant à l'extérieur du connecteur qui pourrait toucher le conducteur adjacent et causer un court-circuit.

a. Modèles 24 V CA/CC

Pour le fonctionnement en 24 V CC, connecter le fil (+) positif d'alimentation à une des bornes (+) et le fil (-) négatif à une des bornes (-) du connecteur enfichable comme montré à la figure 2. Pour le fonctionnement en 24 V CA, connecter le fil de ligne (vivant) de la source de courant à la borne indiquée « L ». Connecter le fil commun (neutre) de la source de courant à la borne indiquée « N ». Voir figure 2. En cas d'exigence des codes locaux de construction, connecter le fil de mise à la terre à la vis verte filetée à l'intérieur de l'enceinte.

b. Modèles 120 V CC et 240V CC

Connecter le fil de ligne (vivant) de la source de courant à la borne indiquée « L ». Connecter le fil commun (neutre) de la source de courant à la borne indiquée « N ». Voir figure 2. En cas d'exigence des codes locaux de construction, connecter le fil de mise à la terre à la vis verte filetée à l'intérieur de l'enceinte.

Brancher le connecteur dans la prise fournie sur la carte de circuits imprimés.

2. Installation de la carte de tonalité

NOTE

La carte de tonalité s'achète séparément.

a. Insérer la carte de tonalité désirée dans la prise femelle comme le montre la figure 2.

b. Pour s'assurer d'une bonne étanchéité, vérifier que le joint de caoutchouc du couvercle est bien installé dans la rainure du boîtier et reposer le couvercle du boîtier.

3. Installation des cartes de connecteurs de haut-parleur (Modèles AM25CK, AM70CK, et 300CK).

NOTE

La carte de connecteurs s'achète séparément.

a. Passer les conducteurs de signal audio dans l'enceinte et les connecter aux entrées audio de la carte de connecteurs. Les cartes de connecteurs NE sont PAS sensibles à la polarité; cependant, il faut observer la polarité en plaçant les unités à proximité l'une de l'autre. Se reporter au manuel d'installation de cartes de connecteurs fourni avec la trousse de cartes de connecteurs pour des renseignements supplémentaires sur les branchements.

b. Insérer la carte de connecteur désirée dans la prise femelle comme le montre la figure 2.

c. Pour s'assurer d'une bonne étanchéité, vérifier que le joint de caoutchouc du couvercle est bien installé dans la rainure du boîtier et reposer le couvercle du boîtier.

⚠ AVERTISSEMENT

Il pourrait arriver des dommages aux biens, des blessures sérieuses ou la mort si le boîtier n'est pas bien fermé. Pour réduire la possibilité d'explosion, il faut que le couvercle du boîtier soit bien fermé pendant la mise sous tension des circuits.

IV. ESSAIS / FONCTIONNEMENT.

⚠ AVERTISSEMENT

Dans certaines situations, ces appareils sont capables de produire des sons suffisamment puissants pour causer une diminution de l'acuité auditive. Vous devez porter une protection auditive adéquate si vous êtes à proximité de l'appareil pendant les essais. Il ne faut pas dépasser les recommandations de la norme de niveau sonore (29 CFR 1910) de l'OSHA.

A. Une fois l'installation terminée, faire l'essai du système pour vérifier que chaque haut-parleur amplifié fonctionne de manière satisfaisante. Si l'unité est trop bruyante pour son emplacement, on peut régler le volume à l'aide d'une commande interne. Reposer le couvercle du boîtier. À l'aide d'un tournevis plat avec une lame de 1/8", tourner doucement la commande à l'intensité sonore désirée. Voir figure 2. Reposer le couvercle du boîtier.

B. Une fois terminé le premier essai du système, il faut établir un programme d'essai périodique de cet appareil.

C. Fournir une copie de ces consignes à l'ingénieur de la sécurité, aux opérateurs du système et au personnel d'entretien.

⚠ MESSAGE DE SÉCURITÉ AUX OPÉRATEURS

Même si votre système fonctionne correctement, il pourrait ne pas être totalement efficace. Les gens pourraient ne pas entendre ou tenir compte du signal avertisseur. Vous devez reconnaître ce fait et vous assurez que votre signal avertisseur atteint son but par de séquences appropriées d'essais et de formation dans le cadre de vos applications spécifiques.

⚠WARNING - RISQUE D'EXPLOSION

La substitution de composants pourrait réduire la compatibilité avec la classe 1, division 2 et classe 1, zone 2

V. ENTRETIEN.

⚠ MESSAGE DE SÉCURITÉ AU PERSONNEL D'ENTRETIEN

Le non respect de toutes les mesures et consignes de sécurité pourrait entraîner des dommages aux biens, de sérieuses blessures ou la mort pour vous ou d'autres

- Lire et comprendre toutes les consignes avant d'effectuer l'entretien de cette unité.
- Pour réduire le risque de chocs électriques ou un allumage d'atmosphères dangereuses, ne pas effectuer d'entretien ou de réparation sur cet appareil si les circuits sont sous tension.
- Il faut faire des vérifications périodiques pour s'assurer que l'efficacité de cet appareil n'a pas été réduite parce qu'une substance étrangère obstrue le haut-parleur ou que des objets ont été placés en devant celui-ci.

- Un électricien formé DOIT effectuer tout entretien de cette unité conformément aux directives du NEC et des codes locaux.

- Ne jamais modifier ces appareils d'aucune façon. Note : Faire d'autres ouvertures ou modifications aux modèles 300GCX or 302GCX pourrait compromettre la sécurité de emplacement dangereux.

- Si l'extérieur de l'appareil est peint, il ne faut pas masquer les plaques signalétiques qui comportent des avertissements et autres renseignements d'importance pour le personnel d'entretien.

A. Inspecter périodiquement cet appareil pour vérifier qu'il n'y a aucune substance étrangère dans ou devant le haut-parleur, ce qui réduirait son efficacité.

B. Il faut effectuer une évaluation périodique de la performance de l,appareil à intervalles réguliers.

C. En cas d'ajustement de volume ou d'une autre réparation, assurez-vous de vous reporter au message de sécurité pour le personnel d'entretien avant de continuer.

⚠ AVERTISSEMENT

Une réparation ou un dépannage non autorisés de cette unité pourrait entraîner une dégradation de la performance et/ou des dommages aux biens, de sérieuses blessures ou la mort pour vous ou d'autres. Si une unité présente un mauvais fonctionnement, ne pas essayer de réparer sur place ou de remplacer des pièces.

VI. SERVICE.

Federal Signal dépannera votre équipement et vous fournira de l'assistance technique pour tout problème qui ne peut être traité localement.

Tout appareil retourné à Federal Signal pour dépannage, inspection ou réparation doit être accompagné d'une autorisation de retour de matériel (RMA). Votre distributeur local ou un représentant du fabricant peut vous fournir cette RMA.

À ce moment-là, vous devrez donner une brève explication du service requis ou de la nature du mauvais fonctionnement.

Adresser toutes les communications et envois à :

Federal Signal Corporation
Electrical Products Division
Service Department
2645 Federal Signal Drive
University Park, IL 60466-3195

VII. PIÈCES DE RECHANGE (Série D).

Description	Numéro de pièce
Sous-ensemble d'amplificateur, 300GC-024, 300GCX-024	K2005356A-05
Sous-ensemble d'amplificateur, 300GC-120, 300GCX-120, 300GC-240 et 300GCX-240	K2005356A-04
Sous-ensemble d'amplificateur, 302GC-024, 302GCX-024	K2005356A-03
Sous-ensemble d'amplificateur, 302GC-120, 302GCX-120, 302GC-240 et 302GCX-240	K2005356A-02
Circuit d'alimentation d'amplificateur, 300GC-024, 300GCX-024	K2001961A-05
Circuit d'alimentation d'amplificateur, 300GC-120, 300GCX-120 300GC-240 et 300GCX-240	K2001961A-04
Circuit d'alimentation d'amplificateur, 302GC-024, 302GCX-024	K2001961A-03
Circuit d'alimentation d'amplificateur, 302GC-120, 302GCX-120 302GC-240 et 302GCX-240	K2001961A-02
Haut-parleur, 300GC-024, 300GCX-024, 300GC-120, 300GCX-120, 300GC-240 et 300GCX-240	8593082A
Haut-parleur, 302GC-024, 302GCX-024, 302GC-120, 302GCX-120, 302GC-240 et 302GCX-240	8593103A
Transformateur, 300GC-120, 300GCX-120	K120857A
Transformateur, 300GC-240, 300GCX-240	K120858A
Transformateur, 302GC-120, 302GCX-120	K120846A
Transformateur, 302GC-240, 302GCX-240	K120856A
Bobine acoustique, 300GC-120, 300GCX-120, 300GC-240 et 300GCX-240	K8593035A
Bobine acoustique, 302GC-120, 302GCX-120, 302GC-240 et 302GCX-240	K8590246A

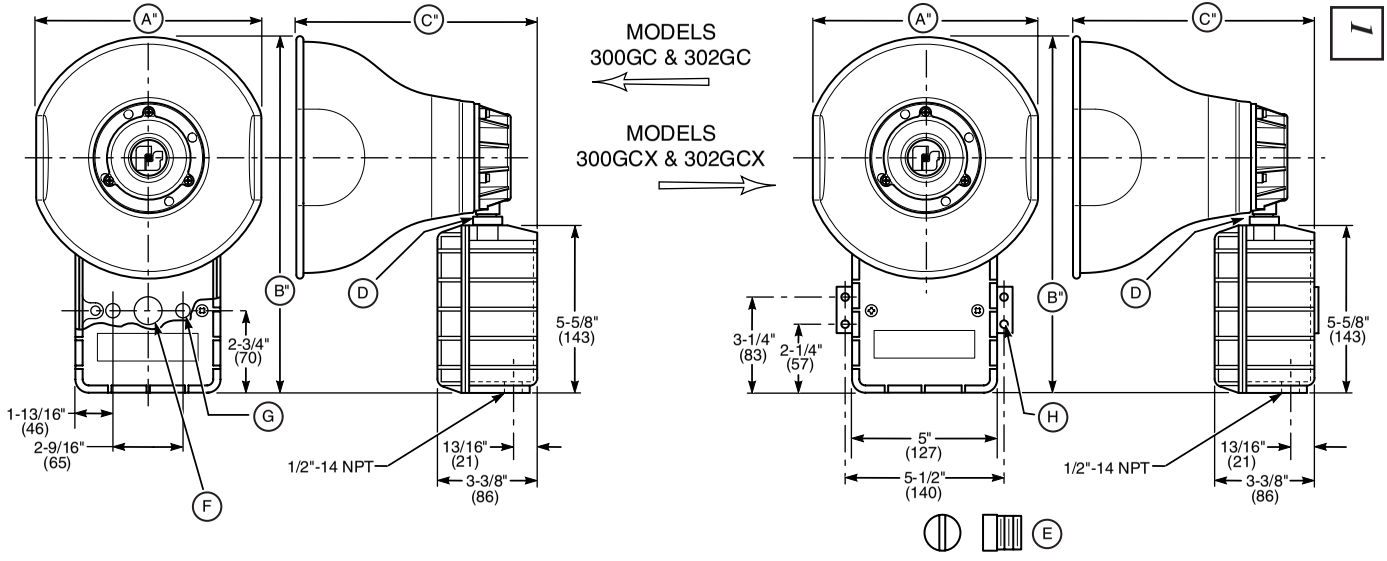

290A5578

English

	300GC & 300GCX	302GC & 302GCX
A.	8-1/8" (206)	10" (254)
B.	12-5/8" (320)	15" (381)
C.	8-1/2" (216)	8-1/2" (216)

D. Collar Nut
E. Conduit Plug
F. 7/8" (22) Diameter Conduit Knockout
G. 0.201" (5.1) Diameter, 2 Mounting holes
H. 0.201" (5.1) Diameter, 4 Mounting holes

Español

	300GC y 300GCX	302GC y 302GCX
A.	8-1/8 pulg (206)	10 pulg (254)
B.	12-5/8 pulg (320)	15 pulg (381)
C.	8-1/2 pulg (216)	8-1/2 pulg (216)

D. Tuerca de collar
E. Tapón de conducto
F. Abertura rompible de 7/8 pulg (22) de diámetro
G. 2 orificios de montaje de 0,201 pulg (5,1) de diámetro
H. 4 orificios de montaje de 0,201 pulg (5,1) de diámetro

Français

	300GC & 300GCX	302GC & 302GCX
A.	8-1/8» (206)	10» (254)
B.	12-5/8» (320)	15» (381)
C.	8-1/2» (216)	8-1/2» (216)

D. Écrou à embase
E. Bouchon de conduit
F. Entrée défonçable de 22 mm de diamètre (7/8»)
G. 2 trous de montage 5,1mm de diamètre (0,201»)
H. 4 trous de montage 5,1mm de diamètre (0,201»)

2

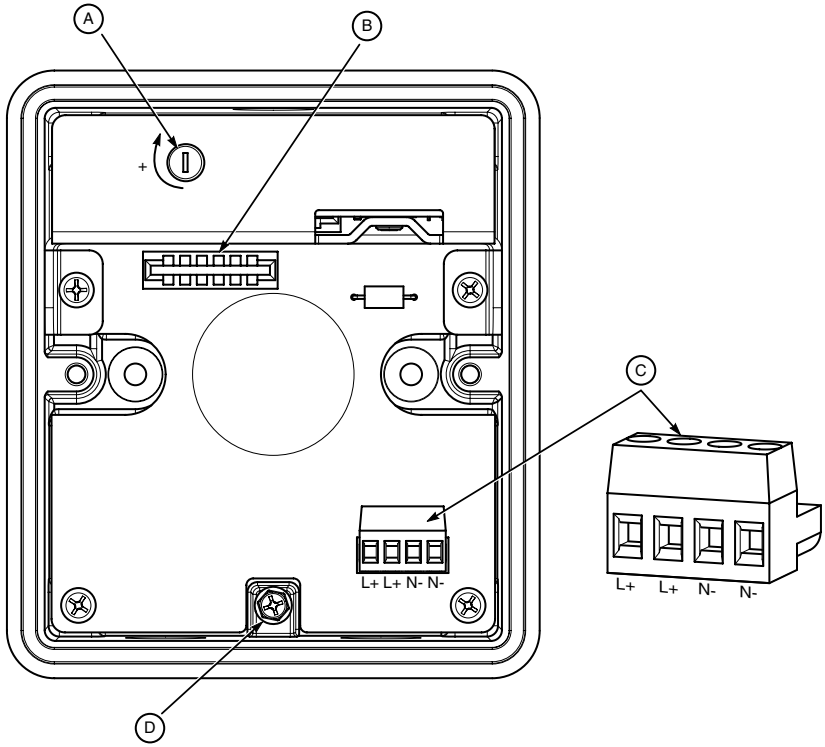

290A5579

English

A. Volume Control
B. Tone/Connector Card Socket
C. Power Connector Plug
D. Earth Grounding Terminal

Español

A. Control de volumen
B. Receptáculo de la tarjeta de conexión/tono
C. Tapón del conector de potencia
D. Terminal de conexión a tierra

Français

A. Commande de volume
B. Prise femelle pour carte de connecteur/tonalité
C. Connecteur d'alimentation
D. Borne de mise à la terre

2562226A
REV. A Printed 9/06
Printed in U.S.A.

DET-TRONICS®

A UTC Fire & Security Company

SPECIFICATION DATA

AUTOMATIC oi



UVIR Flame Detector

X5200

HART COMMUNICATION PROTOCOL

DESCRIPTION

YEAR 3 WARRANTY

The evolution continues with the new X5200 UVIR Flame Detector. The X5200 combines the technologies used in the X2200 and X9800 to provide unparalleled detection capabilities and immunity to extraneous sources, combined with a superior mechanical design. The mounting arrangement allows the UV and IR sensors to monitor the same hazardous location with a 90 degree cone of vision. When both sensors simultaneously detect the presence of a flame, an alarm signal is generated. The detector has Division and Zone explosion-proof ratings and is suitable for use in indoor and outdoor applications.

The standard output configuration includes fire, fault and auxiliary relays. An optional 0 to 20 mA output with HART can be provided in addition to the three relays. A model with pulse output is available for easy retrofitting into existing Det-Tronics controller based systems. Auxiliary relay and 0 to 20 mA output are not available with the pulse model. A tricolor LED on the detector faceplate indicates normal condition and notifies personnel of fire alarm or fault conditions.

The X5200 housing is available in aluminum or stainless steel, with NEMA 4X and IP66 rating.

Typical applications include:
— Munitions
— Petrochemical applications
— Turbines.

FEATURES AND BENEFITS

- FM 3260 (2000).
- EN 54-10 Certified (VdS).
- ATEX Directive compliant.
- EQP models available.
- A new level of false alarm rejection.
- Responds to a fire in the presence of modulated blackbody radiation (i.e. heaters, ovens, turbines) without false alarm.
- HART models available.
- High speed capability.
- Microprocessor controlled heated optics for increased resistance to moisture and ice.
- Automatic, manual or magnetic optical integrity (**oi**) testing — no external test lamp required.
- Easily replaceable **oi** plate.
- Fire, fault and auxiliary relays standard.
- MODBUS RS-485 communication.
- 0 to 20 mA isolated output (optional).
- Pulse output for compatibility with controller based systems (optional).
- A tricolor LED on the detector faceplate indicates normal condition and notifies personnel of fire alarm or fault conditions.
- Mounting swivel allows easy sighting.
- Integral wiring compartment for ease of installation.
- Class A wiring per NFPA-72.
- Meets NFPA-33 response requirement for under 0.5 second (available when model selected).
- RFI and EMC Directive compliant.
- Built-in data logging / event monitoring.

© Detector Electronics Corporation 2010

SPECIFICATIONS

Operating Voltage 24 Vdc. Operating range is 18 to 30 Vdc.

Power Consumption 2.8 watts @ 24 Vdc minimum.
17.5 watts @ 30 Vdc with EOL resistor installed and heater on maximum.

Relays Contacts rated 5 amperes at 30 Vdc.

Fire Alarm: — Form C (NO and NC contacts)
— normally de-energized
— latching/non-latching.

Fault: — Form A (NO contacts)
— normally energized
— latching/non-latching.

Auxiliary*: — Form C (NO and NC contacts)
— normally energized
— latching/non-latching.

Current Output* (Optional) 0–20 mA, with a maximum loop resistance of 500 ohms from 18–19.9 Vdc, 600 ohms from 20–30 Vdc.

Temperature Range Operating: –40°F to +167°F (–40°C to +75°C).
Storage: –67°F to +185°F (–55°C to +85°C).

Humidity Range 0 to 95% relative humidity, can withstand 100% condensing humidity for short periods of time.

Field of View The X5200 has a 90 degree cone of vision with the highest sensitivity lying along its central axis.

Warranty 3 years.

Enclosure Material Copper-free aluminum or 316 stainless steel.

Conduit Entry Size 3/4 inch NPT or 25 mm.

Shipping Weight (Approximate) Aluminum: 6 pounds (2.75 kg).
Stainless Steel: 10 pounds (4.5 kg).

Response Characteristics

Very High Sensitivity UV & IR, Low Arc, TDSA On, Quick Fire On

Fuel	Size	Distance Feet (m)	Typical Response Time (seconds)
n-Heptane	1 x 1 foot	85 (25.9)	14
Methane	32 inch plume	65 (19.8)	5

NOTE: Refer to the X5200 instruction manual 95-8546 for details regarding detector response.

*Auxiliary relay and 0 to 20 mA output are not available on pulse output model.

Certification

Class I, Div. 1, Groups B, C & D (T5);
Class II, Div. 1, Groups E, F, & G (T5);
Class I, Div. 2, Groups A, B, C & D (T3);
Class II, Div. 2, Groups F & G (T3);
Class III.
Enclosure NEMA/Type 4X.

IECEx Certificate of Conformity
IECEx ULD 06.0018X
Ex d e IIC T5-T6 Gb
T6 (T_{amb} = –50°C to +60°C).
T5 (T_{amb} = –50°C to +75°C).
IP66.

– or –

Ex d IIC T5-T6 Gb
T6 (T_{amb} = –55°C to +60°C).
T5 (T_{amb} = –55°C to +75°C).
IP66.

Increased Safety Model
CE 0539 Ex II 2 G
Ex d e IIC T5–T6 Gb
DEMKO 02 ATEX 132195X
T6 (T_{amb} = –50°C to +60°C).
T5 (T_{amb} = –50°C to +75°C).
IP66.

Flameproof Model
CE 0539 Ex II 2 G
Ex d IIC T5–T6 Gb
DEMKO 02 ATEX 132195X
T6 (T_{amb} = –55°C to +60°C).
T5 (T_{amb} = –55°C to +75°C).
IP66.

Dimensions Dimensions shown in inches (centimeters).

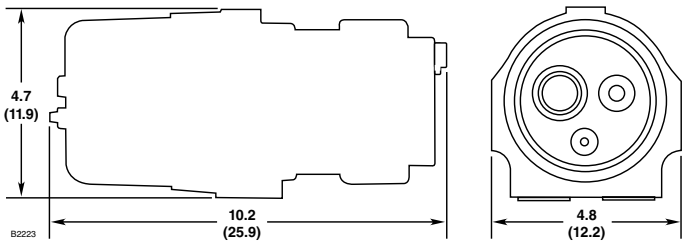

Wiring 14 AWG (2.08 mm²) or 16 AWG (1.31 mm²) shielded cable is recommended.

9	4-20 mA +	19	4-20 mA – SPARE	29
8	4-20 mA + REF	18	4-20 mA – REF SPARE	28
7	COM FIRE	17	COM FIRE COM AUX	27
6	N.O. FIRE	16	N.O. FIRE N.O. AUX	26
5	N.C. FIRE	15	N.C. FIRE N.C. AUX	25
4	COM FAULT	14	COM FAULT RS-485 A	24
3	N.O. FAULT	13	N.O. FAULT RS-485 B	23
2	24 VDC +	12	24 VDC + MAN O_i	22
1	24 VDC –	11	24 VDC – 24 VDC –	21

B2061

Wiring Terminal Identification for Standard X5200

Specifications subject to change without notice.

Det-Tronics, the DET-TRONICS logo, and Protect•IR are registered trademarks or trademarks of Detector Electronics Corporation in the United States, other countries, or both. Other company, product, or service names may be trademarks or service marks of others.

©Copyright Detector Electronics Corporation 2010. All rights reserved.

Detector Electronics Corporation
6901 West 110th Street • Minneapolis, Minnesota 55438 USA
Operator: (952) 941-5665 or (800) 765-FIRE
Customer Service: (952) 946-6491 • Fax (952) 829-8750
http://www.det-tronics.com • E-mail: det-tronics@det-tronics.com

Instructions 95-8546

UVIR Flame Detector
X5200



Table of Contents

DESCRIPTION 1
- Outputs 1
- LED 2
- oi (Optical Integrity) 2
- Communication 3
- Data Logging 3
- Integral Wiring Compartment 3

SIGNAL PROCESSING OPTIONS 3
- IR Detector Options 3
- UV Detector Options 4

GENERAL APPLICATION INFORMATION. 4
- Response Characteristics 4
- False Alarm Sources 5
- Factors Inhibiting Detector Response 5

IMPORTANT SAFETY NOTES. 6

INSTALLATION. 7
- Detector Positioning 7
- Detector Orientation 7
- Protection Against Moisture Damage 8
- Wiring Procedure 8
- EOL Resistors (Not Used with EQP Model) 9
- Setting Device Network Addresses (EQ and EQP Models Only) 14

STARTUP PROCEDURE 15
- Fire Alarm Test 15

TROUBLESHOOTING 15

MAINTENANCE 16
- Cleaning Procedure 16
- oi Plate Removal and Replacement 16
- Periodic Checkout Procedure. 17
- Clock Battery 17

FEATURES. 17

SPECIFICATIONS 18

REPLACEMENT PARTS 20

DEVICE REPAIR AND RETURN 20

ORDERING INFORMATION 20
- Accessories 20
- X5200 Model Matrix. 21

APPENDIX A – FM APPROVAL AND PERFORMANCE REPORT 22

APPENDIX B – CSA APPROVAL. 27

APPENDIX C – ATEX / CE APPROVAL. 28

APPENDIX D – IECEx APPROVAL 30

APPENDIX E – EN54 APPROVALS. 31

APPENDIX F – ADDITIONAL APPROVALS 32

DET-TRONICS
United Technologies

INSTRUCTIONS

AUTOMATIC oi

UVIR Flame Detector

X5200

IMPORTANT

Be sure to read and understand the entire instruction manual before installing or operating the flame detection system. Any deviation from the recommendations in this manual may impair system performance and compromise safety.

ATTENTION

The X5200 includes the Automatic ***oi***® *(Optical Integrity) feature — a calibrated performance test that is automatically performed once per minute to verify complete detector operation capabilities.* ***Testing with an external test lamp is not approved or required.***



DESCRIPTION

The X5200 UVIR Flame Detector meets the most stringent requirements worldwide with advanced detection capabilities and immunity to extraneous sources, combined with a superior mechanical design. The mounting arrangement allows the UV and IR sensors to monitor the same hazardous location with a 90 degree cone of vision. When both sensors simultaneously detect the presence of a flame, an alarm signal is generated. The detector has Division and Zone explosion-proof ratings and is suitable for use in indoor and outdoor applications.

The standard output configuration includes fire, fault and auxiliary relays. Output options include:

- 0 to 20 mA output (in addition to the three relays)
- Pulse output for compatibility with existing Detector Electronics Corporation (Det-Tronics®) controller based systems (with fire and fault relays)
- Eagle Quantum Premier® (EQP) compatible model (no analog or relay outputs)
- HART communication

A tri-color LED on the detector faceplate indicates normal condition and notifies personnel of fire alarm or fault conditions.

Microprocessor controlled heated optics increase resistance to moisture and ice.

The X5200 housing is available in copper-free aluminum or stainless steel, with NEMA/Type 4X and IP66/IP67 rating.

OUTPUTS

Relays

The standard detector is furnished with fire, fault and auxiliary relays. All three relays are rated 5 amperes at 30 Vdc.

The Fire Alarm relay has redundant terminals and normally open / normally closed contacts, normally de-energized operation, and latching or non-latching operation.

The Fault relay has redundant terminals and normally open contacts, normally energized operation, and latching or non-latching operation.

©Detector Electronics Corporation 2013

The Auxiliary relay has normally open / normally closed contacts, and is configurable for energized or de-energized operation, and latching or non-latching operation.

0 to 20 mA Output

A 0 to 20 mA output is available as an option (in addition to the three relays). This option provides a 0 to 20 mA dc current output for transmitting detector status information to other devices. The circuit can be wired in either an isolated or non-isolated configuration and can drive a maximum loop resistance of 500 ohms from 18 to 19.9 Vdc and 600 ohms from 20 to 30 Vdc. Table 1 indicates the detector status conditions represented by the various current levels. The output is calibrated at the factory, with no need for field calibration. A model with relays and 0-20 mA with HART is also available. Refer to Addendum number 95-8636 for complete details.

NOTE

The output of the 0 to 20 mA current loop is not monitored by the fault detection circuitry of the X5200. Therefore, an open circuit on the loop will not cause the fault relay to change state or the detector status LED to indicate a fault.The status of the LED always follows the status of the relays.

An alarm condition will normally over-ride a fault condition, unless the nature of the fault condition impairs the ability of the detector to generate or maintain an alarm output, i.e. loss of operating power.

Table 1—Detector Status Conditions Indicated by Current Level

Current Level (±0.3 mA)	Detector Status
0 mA	Power Fault
1 mA	General Fault
2 mA	**oi** Fault
4 mA	Normal Operation
8 mA	IR Pre-Alarm only
12 mA	UV Alarm only
14 mA	IR Alarm only
16 mA	Pre-Alarm
20 mA	Fire Alarm

LON/SLC Output

The EQP model is designed for use exclusively with the Det-Tronics Eagle Quantum Premier system. The detector communicates with the system controller over a digital communication network or LON/SLC (Local Operating Network / Signaling Line Circuit). The LON/SLC is a fault tolerant, two wire digital communication network arranged in a loop configuration. Analog and relay outputs are not available on this model.

LED

A tri-color LED on the detector faceplate indicates normal condition and notifies personnel of fire alarm or fault conditions. Table 2 indicates the condition of the LED for each status.

Table 2—Detector Status Indicator

Detector Status	LED Indicator
Power On/Normal Auto **oi** (no fault or fire alarm)	Green
Power On/Normal Man **oi**	Green, flashing off for 0.5 sec. every 5 sec.
Fault	Yellow
UV Alarm only	Red, flashing on for 0.5 sec. and off for 0.5 sec.
IR Alarm only	Red, flashing on for 0.25 sec. and off for 0.25 sec.
Pre-Alarm	Red, flashing on for 1 sec. and off for 1 sec.
Fire (Alarm)	Steady Red
On Power-Up, The LED Flashes in Sequence as Follows, Indicating Sensitivity and Signal Processing Status	
Low UV Sensitivity Medium UV Sensitivity High UV Sensitivity Very High UV Sensitivity	One Red Flash Two Red Flashes Three Red Flashes Four Red Flashes
Stand. UV Signal Process. Arc Rej. UV Signal Process.	One Yellow Flash Two Yellow Flashes
Low IR Sensitivity Medium IR Sensitivity High IR Sensitivity Very High IR Sensitivity	One Green Flash Two Green Flashes Three Green Flashes Four Green Flashes
Quick Fire/TDSA IR Signal TDSA only IR Signal	One Yellow Flash Two Yellow Flashes

ATTENTION

The X5200 contains a source tube that is filled with a gas mixture containing Krypton 85 (Kr^{85}), a radioactive material. Radioactive materials are subject to regulation under U.S. and international law.

oi (OPTICAL INTEGRITY)

Automatic oi

The X5200 includes the Automatic **oi** feature — a calibrated performance test that is automatically performed once per minute to verify complete detector operation capabilities. No testing with an external test lamp is required. The detector automatically performs the same test that a maintenance person with a test lamp would perform — once every minute, 60 times per hour. However, a successful Automatic **oi** test does not produce an alarm condition.

The X5200 signals a fault condition when less than half of the detection range remains. This is indicated by the Fault output and is evident by the yellow color of the LED on the face of the detector. See the "Troubleshooting" section for further information.

Magnetic oi / Manual oi

The detector also incorporates both Magnetic **oi** (Mag **oi**) and Manual **oi** (Man **oi**) features that provide the same calibrated test as the Automatic **oi**, and in addition actuates the Alarm output to verify operation for preventive maintenance requirements. These features can be performed at any time and eliminate the need for testing with a non-calibrated external test lamp.

⚠CAUTION

These tests require disabling of all extinguishing devices to avoid release resulting from a successful test.

The Mag **oi** test is performed by placing a magnet at the location marked "MAG OI" on the outside of the detector (see Figure 2). The Man **oi** test is accomplished by connecting the **oi** lead (terminal 22) to power supply minus via an external switch. The magnet or switch must be held in place for a minimum of 6 seconds to complete the test. Either of these test methods activates the calibrated UV and IR emitters. If the resulting signal meets the test criteria, indicating that greater than half of the detection range remains, the Alarm output changes state, the indicating LED changes to red, and the 0-20 mA current output goes to 20 mA. This condition remains until the magnet is removed or the switch is released, regardless of whether the relays are set for latching or non-latching operation.

If less than half of the detection range remains, no alarm is produced and a fault is generated. The fault indication can be reset by momentarily applying the Mag **oi** or Man **oi** switch.

NOTE

*Refer to Appendix A for FM verification of the **oi** function.*

COMMUNICATION

The X5200 is furnished with an RS-485 interface for communicating status and other information with external devices. The RS-485 supports MODBUS protocol, with the detector configured as a slave device.

For HART communication, connect a HART communicator across a 250 ohm resistor in the 0-20 mA loop.

NOTE

The EQP model uses LON/SLC communication. RS-485 and HART communication are not available on the EQP model.

DATA LOGGING

Data logging capability is also provided. Status conditions such as normal, power down, general and **oi** faults, pre-alarm, fire alarm, time and temperature are recorded. Each event is time and date stamped, along with the temperature and input voltage. Event data is stored in non-volatile memory when the event becomes active, and again when the status changes. Data is accessible using the Inspector Connector accessory, RS-485, or the EQP Controller.

INTEGRAL WIRING COMPARTMENT

All external wiring to the device is connected within the integral junction box. The detector is furnished with four conduit entries, with either 3/4 inch NPT or M25 threads.

SIGNAL PROCESSING OPTIONS

The X5200 features signal processing options for both the UV and IR sensor. These options determine the type of logic that the detector will use for processing fire signals to customize the X5200 to the application.

IR DETECTOR OPTIONS

The IR detector in the X5200 can be programmed for:

- TDSA enabled
- Both TDSA and Quick Fire enabled (either initiates fire alarm)

Time Domain Signal Analysis (TDSA)

The TDSA signal processing technique analyzes the input signal in real time, requiring the IR signal to flicker randomly in order to recognize it as a fire condition.

Using TDSA signal processing, the X5200 ignores regularly chopped blackbody sources (occurring in areas where moving conveyors and hot objects in proximity to one another result in a regularly chopped IR signal), because it looks for a less uniform signal. However, in the presence of a regularly chopped signal, the detector is more susceptible to false alarms due to sporadic IR that functions as a trigger when occurring in conjunction with the regularly chopped signal.

Quick Fire (High Speed)

The Quick Fire (High Speed) feature can be used in conjunction with the TDSA signal processing method. This method overrides TDSA requirements in the event of a sudden and intense signal, such as the result of a flash fire. When Quick Fire is activated, the detector is capable of responding to an intense fire signal in less than 30 milliseconds (0.030 seconds). Using the Quick Fire feature in conjunction with TDSA signal processing allows the detector to provide a high speed response to a large, non-flickering fire (such as in high pressure gas applications). Additionally, when the Quick Fire feature and TDSA signal processing are used in conjunction, the detector maintains an ability to respond to fires that start very small and grow in size and intensity over time.

UV DETECTOR OPTIONS

The UV detector output (measured in counts per second) is compared to the fire threshold (the "sensitivity" setting). If the radiant energy level from the fire exceeds the selected alarm threshold level, the fire alarm output is activated. In every application, it is crucial to ensure that the radiant ultraviolet energy level from the expected fire at the required distance from the detector will exceed the selected sensitivity level.

The UV detector in the X5200 can be programmed for:

- Arc Rejection
- Standard Signal Processing

Arc Rejection

The Arc Rejection mode enables the detector to prevent nuisance fire alarms caused by UV from short-duration electrical arcs or electrostatic discharge, while maintaining the ability to reliably detect the UV radiation given off by a flame. Typical applications that benefit from arc rejection logic include electrostatic coating processes and uncontrolled environments where transient UV sources can be present, such as many typical outdoor applications. Most false alarm sources have short transient UV signatures, while fire creates a long UV signature over many seconds. Most fires are detected in a few seconds (see response times in Appendix A).

Standard Signal Processing

Standard signal processing is recommended for high-speed suppression systems only. To allow for high-speed operation, the standard processing mode does not incorporate the arc rejection programming. This mode should only be used in a controlled, indoor environment.

GENERAL APPLICATION INFORMATION

RESPONSE CHARACTERISTICS

Response is dependent on the detector's sensitivity setting, arc rejection, and time delay settings. Other factors include distance, type of fuel, temperature of the fuel, and time required for the fire to come to equilibrium. As with all fire tests, results must be interpreted according to an individual application.

See Appendix A for third-party approved fire test results. Additional fire test results are available from Det-Tronics.

Welding

Electric arc welding is a source of intense ultraviolet radiation. UV radiation from arc welding readily scatters and can deflect across significant distances, even when direct obstructions exist. Any open door or window can allow nuisance UV radiation from arc welding to enter an enclosed area, causing a possible response from the UV detector.

It is recommended that the system be bypassed during welding operations in situations where the possibility of a false alarm cannot be tolerated. Gas welding mandates system bypass, since the gas torch is an actual fire. Arc welding rods can contain organic binder materials in the flux that burn during the welding operation and are detectable by the X5200. Welding rods with clay binders do not burn and will not be detected by the X5200. However, system bypass is always recommended, since the material being welded may be contaminated with organic substances (paint, oil, etc.) that will burn and possibly cause the X5200 to alarm.

Artificial Lighting

The X5200 should not be located within 3 feet (0.9 m) of artificial lights. Excess heating of the detector could occur due to heat radiating from the lights.

EMI/RFI Interference

The X5200 is resistant to interference by EMI and RFI, and is EMC Directive compliant and CE marked. It will not respond to a 5 watt walkie-talkie at distances greater than 1 foot (0.3 m).

Non-Carbon Fires

The response of the X5200 is limited to carbonaceous fuels. It should not be used to detect fires from fuels that do not contain carbon, such as hydrogen, sulfur and burning metals.

FALSE ALARM SOURCES

UV: The UV sensor is solar blind to the ultraviolet component of solar radiation. However, it may respond to sources of UV besides fire, such as arc flash, electric arc welding, grinding metal, lightning, high voltage corona, x-rays, and gamma radiation.

NOTE

Radiation generated by false alarm sources such as periodic lightning or sparks in the area may be effectively ignored by the detector using the arc rejection feature or time delay.

IR: The detector has been designed to ignore steady state infrared sources that do not have a flicker frequency characteristic of a fire, however, it should be noted that if these steady state infrared sources are hot enough to emit adequate amounts of infrared radiation in the response range of the IR sensor and if this radiation becomes interrupted from the view of the detector in a pattern characteristic of a flickering flame, the IR sensor can respond.

Any object having a temperature greater than 0° Kelvin (–273°C) emits infrared radiation. The hotter the object, the greater the intensity of the emitted radiation. The closer the infrared source is to the detector, the greater the potential for a false alarm. The IR sensor can respond to IR radiation sources that can meet the amplitude and flicker requirements of the detector such as vibrating hot objects.

Although the detector is designed to reduce false actuations, certain combinations of ambient radiation must be avoided. For example, if IR radiation with an intensity that exceeds the fire threshold of the IR sensor should reach the detector as a flickering signal, and if at the same time an electric arc welding signal also reaches the detector, an alarm output will be generated.

FACTORS INHIBITING DETECTOR RESPONSE

Windows

Glass and Plexiglas windows significantly attenuate radiation and must not be located between the detector and a potential flame source. If the window cannot be eliminated or the detector location changed, contact Det-Tronics for recommendations regarding window materials that will not attenuate radiation.

Obstructions

Radiation must be able to reach the detector in order for it to respond. Care must be taken to keep physical obstructions out of the line of view of the detector. In addition, UV or IR absorbing gases or vapors must not be allowed to accumulate between the detector and the protected hazard. See Table 3 for a list of these substances.

Smoke

Smoke will absorb radiation. If accumulations of dense smoke can be expected to precede the presence of a flame, then detectors that are used in enclosed areas should be mounted on the wall approximately 3 feet (0.9 m) from the ceiling where the accumulation of smoke is reduced.

Detector Viewing Windows

It is important to keep the detector viewing windows as free of contaminants as possible in order to maintain maximum sensitivity. Commonly encountered substances that can significantly attenuate UV and/or IR radiation include, but are certainly not limited to, the following:

- Silicones
- Oils and greases
- Dust and dirt buildup
- Paint overspray
- Water and ice

Table 3—UV and IR Absorbing Gases and Vapors

The following is a partial list of compounds that exhibit significant UV absorption characteristics. These are also usually hazardous vapors. While generally of little consequence in small amounts, these gases can restrict UV detection if they are in the atmosphere in heavy concentrations. It should also be determined whether or not large amounts of these gases may be released as a result of a fire-causing occurrence.

Acetaldehyde	Methyl Methacrylate
Acetone	Alpha-Methylstyrene
Acrylonitrile	Naphthalene
Ethyl Acrylate	Nitroethane
Methyl Acrylate	Nitrobenzene
Ethanol	Nitromethane
Ammonia	1-Nitropropane
Aniline	2-Nitropropane
Benzene	2-Pentanone
1,3 Butadiene	Phenol
2—Butanone	Pyridine
Butylamine	Hydrogen Sulfide
Chlorobenzene	Styrene
1-Chloro-1-Nitropropane	Tetrachloroethylene
Chloroprene	Toluene
Cumene	Trichloroethylene
Cyclopentadiene	Vinyl Toluene
O-Dichlorobenzene	Xylene
P-Dichlorobenzene	

If UV-absorbing gases may be a factor in a given application, precautionary measures should be taken. Detectors can be placed closer to the potential hazard area, and/or the sensitivity of the detection system can be increased. Contact the factory for further details.

Substances such as methane, propane, butane, hexane, camphor and octane are not UV absorbing.

Absorption of infrared radiation in the range of 4.2 to 4.7 microns is not a significant problem with most organic vapors, with the exception of those compounds that have triple bonds such as acetylene, nitriles, silane, or isocyanates. Carbon dioxide concentrations higher than normally present in the atmosphere can also cause substantial loss of fire detection sensitivity.

IMPORTANT SAFETY NOTES

⚠ WARNING

Do not open the detector assembly in a hazardous area when power is applied. The detector contains limited serviceable components and should never be opened. Doing so could disturb critical optical alignment and calibration parameters, possibly causing serious damage.

⚠ CAUTION

The wiring procedures in this manual are intended to ensure proper functioning of the device under normal conditions. However, because of the many variations in wiring codes and regulations, total compliance to these ordinances cannot be guaranteed. Be certain that all wiring complies with the NEC as well as all local ordinances. If in doubt, consult the authority having jurisdiction before wiring the system. Installation must be done by a properly trained person.

CAUTION

To prevent unwanted actuation or alarm, extinguishing devices must be disabled prior to performing detection system tests or maintenance.

CAUTION

The UVIR flame detectors are to be installed in places where the risk of mechanical damage is low.

ATTENTION

Remove the protective cap from the front of the detector before activating the system.

ATTENTION

Observe precautions for handling electrostatic sensitive devices.

ATTENTION

The source tube is a flame-sealed gas tube containing Neon, Hydrogen, and a trace amount of Krypton 85 (Kr^{85}), a radioactive material. The total volume of gas within the tube is 0.6 ml per tube, making the gas mixture inside the tube nonflammable. If the gas envelope is broken, it will not produce a flammable mixture, and the gas immediately disperses into the air and is unlikely to present any type of hazard. Krypton gas and its radioactive isotope are inert and are not absorbed by the body. No special handling measure or personal protection equipment is needed for the UVIR detectors.

INSTALLATION

NOTE

The recommended lubricant for threads and O-rings is a silicone free grease (p/n 005003-001) available from Detector Electronics. Under no circumstances should a lubricant containing silicone be used.

DETECTOR POSITIONING

Detectors should be positioned to provide the best unobstructed view of the area to be protected. The following factors should also be taken into consideration:

- Identify all high risk fire ignition sources.
- Be sure that enough detectors are used to adequately cover the hazardous area.
- Be sure that the unit is easily accessible for cleaning and other periodic servicing.
- Verify that all detectors in the system are properly located and positioned so that any fire hazards are within both the Field of View (FOV) and detection range of the detector. The Q1201C Laser Aimer is recommended for establishing the detector's FOV. Refer to Appendix A for specific information regarding detector range and FOV.
- The detector should be aimed downward at least 10 to 20 degrees to allow lens openings to drain (see Figure 1). **The detector should be positioned so that its FOV does not cover areas outside the hazardous area.** This will minimize the possibility of false alarms caused by activities outside the area requiring protection.
- The detector must be mounted on a rigid surface in a low vibration area.

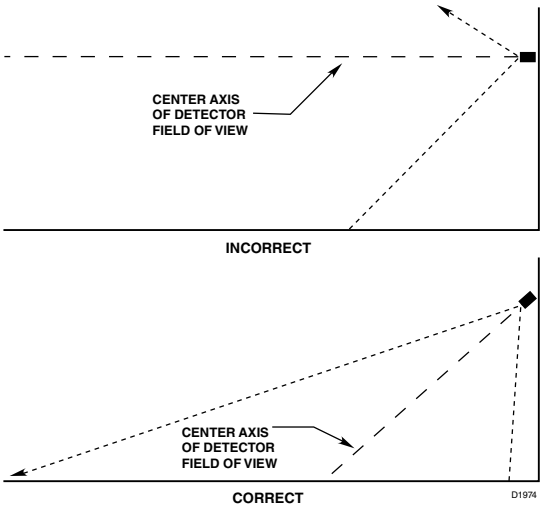

NOTE: DETECTOR MUST ALWAYS BE AIMED DOWNWARD AT LEAST 10 TO 20 DEGREES.

Figure 1—Detector Orientation Relative to Horizon

- Dense fog, rain as well as certain gases and vapors (see Table 3) can absorb UV and IR radiation and reduce the sensitivity of the detector.
- If possible, fire tests can be conducted to verify correct detector positioning and coverage.
- For ATEX installations, the X5200 Flame Detector housing must be electrically connected to earth ground.

DETECTOR ORIENTATION

Refer to Figure 2 and ensure that the **oi** plate will be oriented as shown when the X5200 is mounted and sighted. This will ensure proper operation of the **oi** system and will also minimize the accumulation of moisture and contaminants between the **oi** plate and the viewing windows.

IMPORTANT

*If removed, the **oi** plate **must** be securely tightened to ensure proper operation of the **oi** system (40 oz./inches [28.2 N·cm] recommended).*

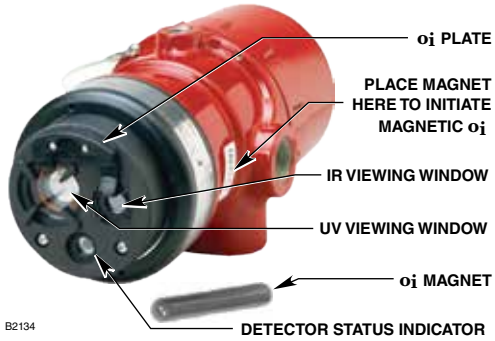

Figure 2—Front View of the X5200

PROTECTION AGAINST MOISTURE DAMAGE

It is important to take proper precautions during installation to ensure that moisture will not come in contact with the electrical connections or components of the system. The integrity of the system regarding moisture protection must be maintained for proper operation and is the responsibility of the installer.

If conduit is used, we recommend installing drains, according to local codes, at water collection points to automatically drain accumulated moisture. It is also recommended to install at least one breather, according to local codes, at upper locations to provide ventilation and allow water vapor to escape.

Conduit raceways should be inclined so that water will flow to low points for drainage and will not collect inside enclosures or on conduit seals. If this is not possible, install conduit drains above the seals to prevent the collection of water or install a drain loop below the detector with a conduit drain at the lowest point of the loop.

Conduit seals are not required for compliance with explosion-proof installation requirements, but are highly recommended to prevent water ingress in outdoor applications. Units with M25 threads must use an IP66/IP67 washer to prevent water ingress.

WIRING PROCEDURE

Wire Size and Type

The system should be wired according to local codes. The wire size selected should be based on the number of detectors connected, the supply voltage and the cable length. Typically 16 AWG or 2.5 mm^2 shielded cable is recommended. Wires should be stripped 3/8 inch (9 mm). A minimum input voltage of 18 Vdc must be present at the X5200.

NOTE

Refer to "Power Consumption" in the "Specifications" section of this manual.

The use of shielded cable is required to protect against interference caused by EMI and RFI. When using cables with shields, terminate the shields as shown in Figures 7 through 12, and Figure 15. Consult the factory if not using shielded cable.

In applications where the wiring cable is installed in conduit, the conduit must not be used for wiring to other electrical equipment.

If disconnection of power is required, separate disconnect capability must be provided.

CAUTION

Installation of the detector and wiring should be performed only by qualified personnel.

Detector Mounting

Install the mounting arm assembly on a rigid surface. The ideal installation surface should be free of vibration and suitable to receive 3/8 inch or M10 bolts with a length of at least 1 inch (25 mm). The surface must also have sufficient capacity to hold the detector and mounting arm weights (See "Specifications" section). Refer to the Q9033 Mounting Arm manual (95-8686) for additional mounting information. See Figure 3 for dimensions.

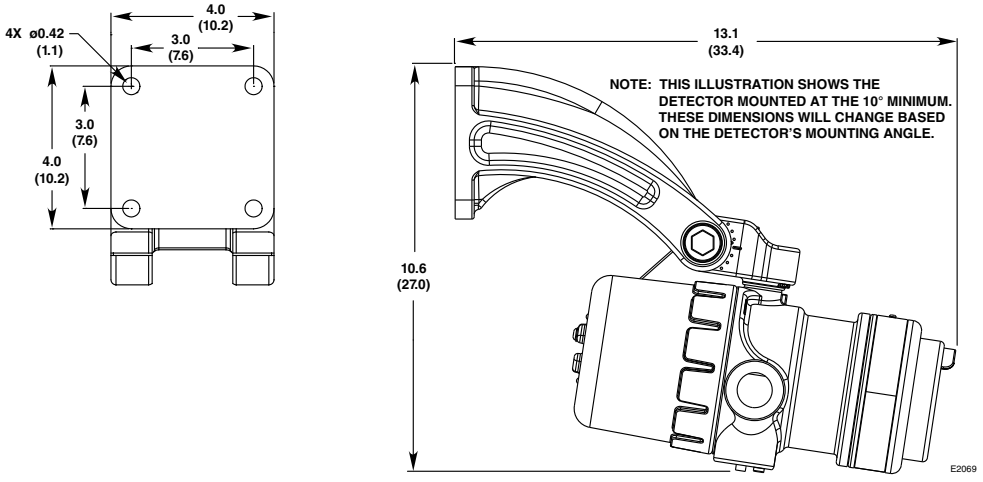

Figure 3—Q9033 Mounting Arm without Collar Attachment Dimensions in Inches (cm)
(See Figure 1 for Correct Detector Orientation.)

Relay and 0-20 mA Output Models

Follow the instructions below to install the X5200.

1. Make field connections following local ordinances and guidelines in this manual. Refer to Figures 4 through 12.
2. Check all field wiring to be sure that the proper connections have been made.

IMPORTANT

Do not test any wiring connected to the detector with a meg-ohmmeter. Disconnect wiring at the detector before checking system wiring for continuity.

3. Make the final sighting adjustments and use a 14 mm hex wrench to ensure that the mounting arm assembly is tight.



Figure 4—X5200 Terminal Block

9	4-20 mA +	19	4-20 mA –	29	SPARE
8	4-20 mA + REF	18	4-20 mA – REF	28	SPARE
7	COM FIRE	17	COM FIRE	27	COM AUX
6	N.O. FIRE	16	N.O. FIRE	26	N.O. AUX
5	N.C. FIRE	15	N.C. FIRE	25	N.C. AUX
4	COM FAULT	14	COM FAULT	24	RS-485 A
3	N.O. FAULT	13	N.O. FAULT	23	RS-485 B
2	24 VDC +	12	24 VDC +	22	MAN O_i
1	24 VDC –	11	24 VDC –	21	24 VDC –

C2061

Figure 5—Wiring Terminal Identification

EOL RESISTORS (Not Used with EQP Model)

To ensure that the insulating material of the wiring terminal block will not be affected by the heat generated by EOL resistors, observe the following guidelines when installing the resistors.

1. Required EOL resistor power rating must be 5 watts minimum.

NOTE

EOL resistors must be ceramic, wirewound type, rated 5 watts minimum, with actual power dissipation not to exceed 2.5 watts. ***This applies to ATEX/IEC installations only****.*

2. Resistor leads should be cut to a length of approximately 1 1/2 inches (40 mm).
3. Bend the leads and install the EOL resistor as shown in Figure 6.
4. Maintain a 3/8 inch (10 mm) minimum gap between the resistor body and the terminal block or any other neighboring parts.

NOTE

The EOL resistor can only be used within the flameproof terminal compartment. Unused conduit entries shall be closed with suitable blanking elements.

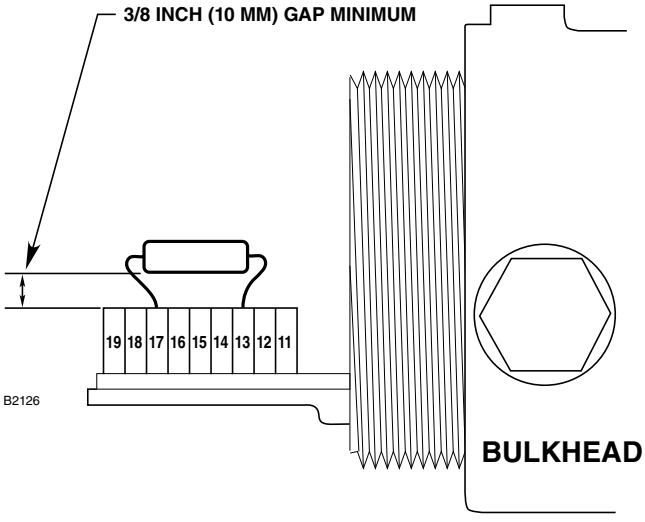

Figure 6—EOL Resistor Installation

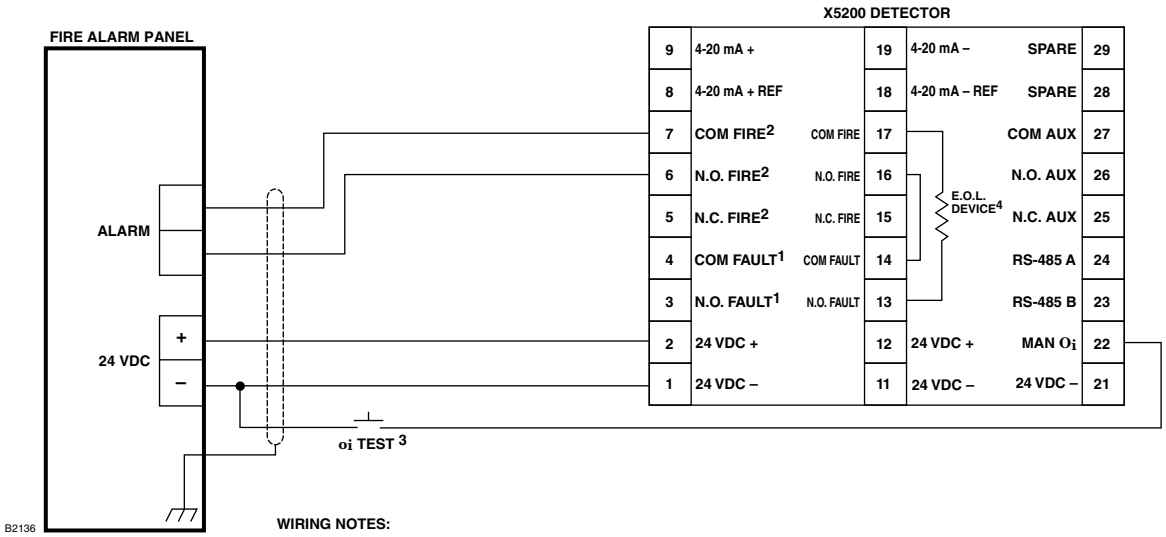

WIRING NOTES:

1 IN NORMAL OPERATION WITH NO FAULTS OCCURRING, THE FAULT RELAY COIL IS ENERGIZED AND THE NORMALLY OPEN (N.O.) AND COMMON (COM) CONTACTS ARE CLOSED.

2 ALARM RELAY IS NORMALLY DE-ENERGIZED WITH NO ALARM CONDITION PRESENT.

3 INDIVIDUAL MANUAL Oi TEST SWITCHES CAN BE INSTALLED REMOTELY OR A DETECTOR SELECTOR AND ACTIVATION SWITCH CAN BE INSTALLED AT THE FIRE PANEL. TEST SWITCHES ARE NOT SUPPLIED.

4 REFER TO SPECIFICATIONS SECTION FOR EOL RESISTOR VALUES. REFER TO EOL RESISTORS SECTION FOR INSTALLATION DETAILS.

Figure 7—Ex d Wiring Option

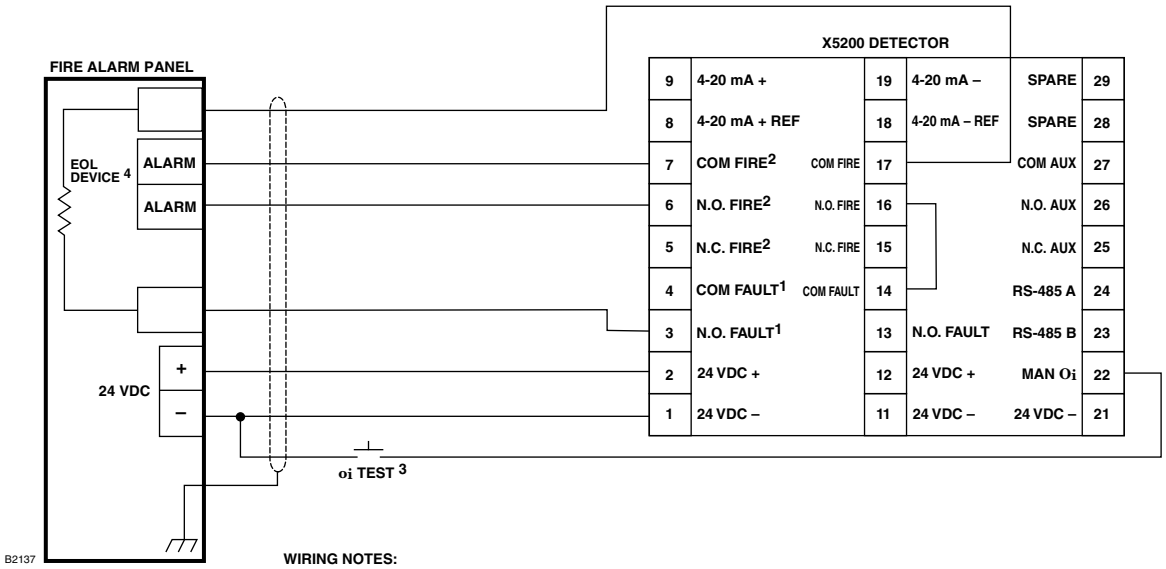

WIRING NOTES:

1 IN NORMAL OPERATION WITH NO FAULTS OCCURRING, THE FAULT RELAY COIL IS ENERGIZED AND THE NORMALLY OPEN (N.O.) AND COMMON (COM) CONTACTS ARE CLOSED.

2 ALARM RELAY IS NORMALLY DE-ENERGIZED WITH NO ALARM CONDITION PRESENT.

3 INDIVIDUAL MANUAL Oi TEST SWITCHES CAN BE INSTALLED REMOTELY OR A DETECTOR SELECTOR AND ACTIVATION SWITCH CAN BE INSTALLED AT THE FIRE PANEL. TEST SWITCHES ARE NOT SUPPLIED.

4 EOL RESISTOR SUPPLIED BY PANEL.

Figure 8—Ex e Wiring Option

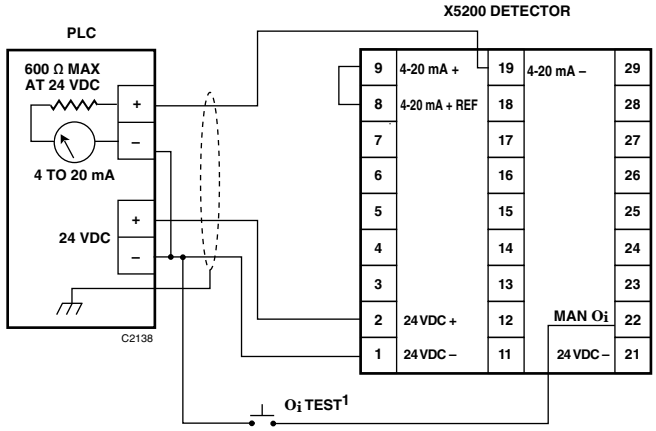

Figure 9—X5200 Detector Wired for Non-Isolated 0 to 20 mA Current Output (Sourcing)

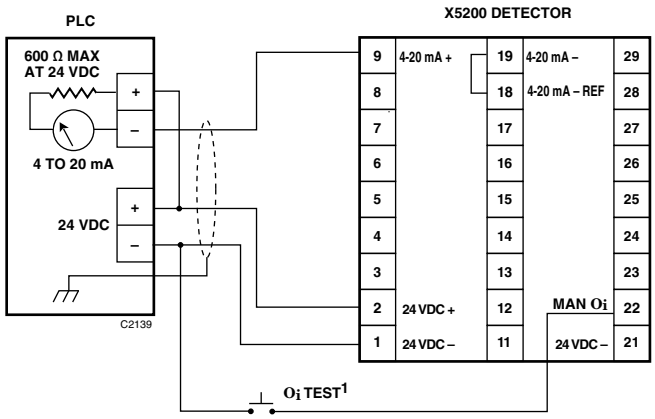

Figure 10—X5200 Detector Wired for Non-Isolated 0 to 20 mA Current Output (Sinking)

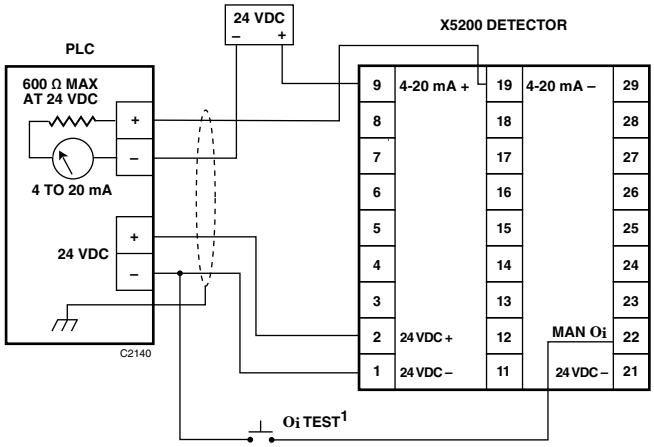

Figure 11—X5200 Detector Wired for Isolated 0 to 20 mA Current Output (Sourcing)

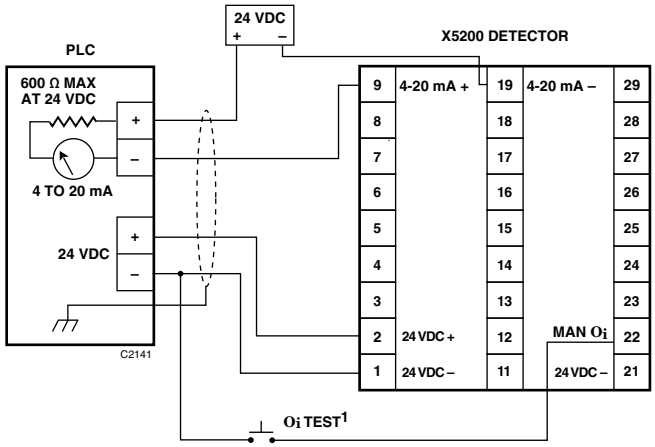

Figure 12—X5200 Detector Wired for Isolated 0 to 20 mA Current Output (Sinking)

NOTES: 1. INDIVIDUAL MANUAL oi TEST SWITCHES CAN BE INSTALLED REMOTELY OR A DETECTOR SELECTOR AND ACTIVATION SWITCH CAN BE INSTALLED AT THE FIRE PANEL. TEST SWITCHES ARE NOT SUPPLIED.

EQP Model

1. Connect external wires to the appropriate terminals inside the device junction box, shown in Figure 13. See Figure 14 for terminal identification.
2. Connect the shield of the power cable to “earth ground” at the power source.
3. Connect shields for the LON cable as indicated. See Figure 15.

NOTE

DO NOT ground any shields at the detector housing.

4. With input power disconnected, set the device network address. (See “Setting Device Network Addresses” section of this manual for switch setting procedure.)
5. Check all field wiring to be sure that the proper connections have been made.
6. Replace the device cover and apply input power.
7. Make the final sighting adjustments and use a 14 mm hex wrench to ensure that the mounting arm assembly is tight.

NOTE

Refer to the Eagle Quantum Premier system manual (95-8533) for information regarding power requirements, network communication cable requirements, and configuration.



Figure 13—X5200 Terminal Block (EQP Model)

6	COM SHIELD	16	COM SHIELD
5	COM 1 A	15	COM 2 A
4	COM 1 B	14	COM 2 B
3	POWER SHIELD	13	POWER SHIELD
2	24 VDC +	12	24 VDC +
1	24 VDC –	11	24 VDC –

B2089

Figure 14—Wiring Terminal Identification for X5200 EQP Model

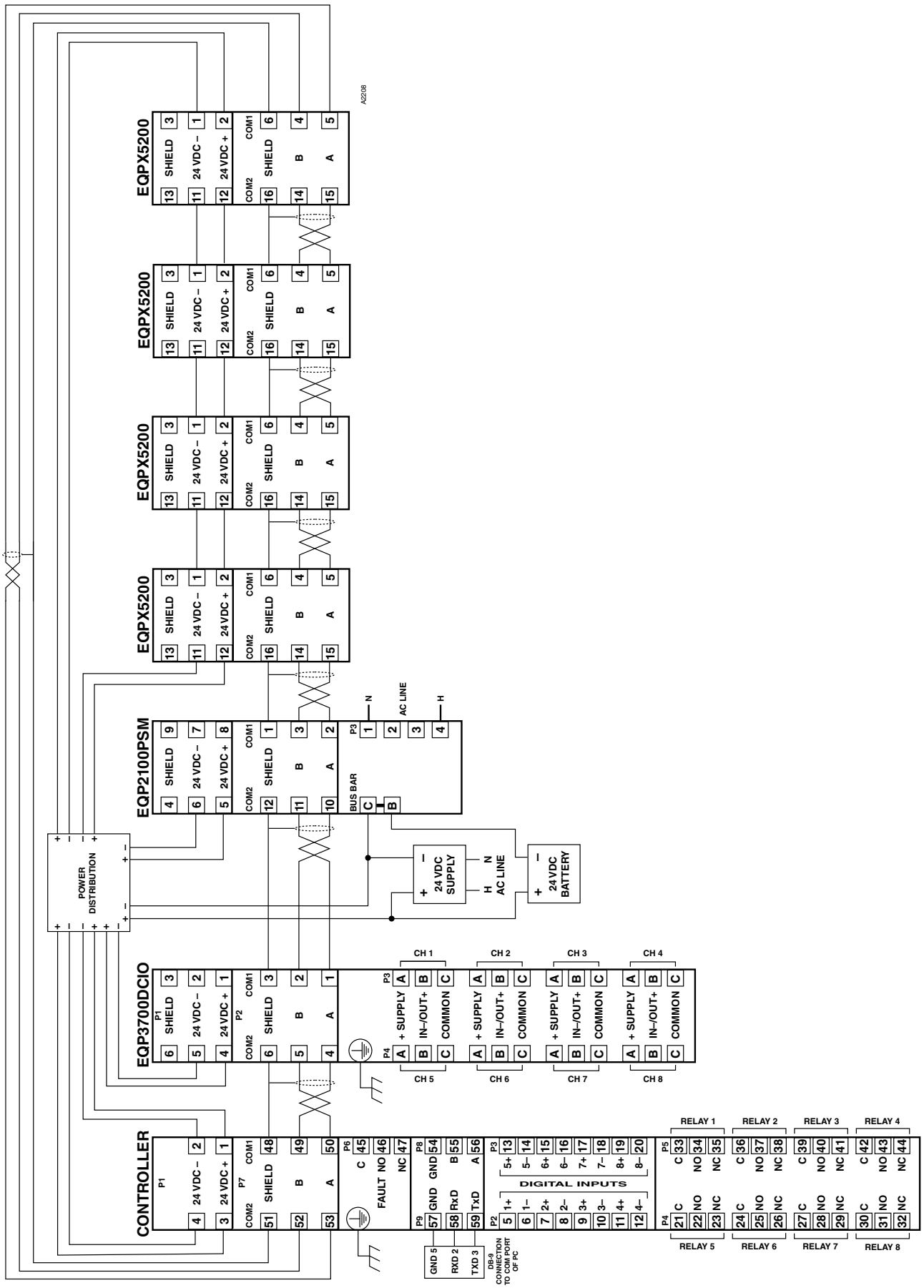

Figure 15—A Typical EQP System

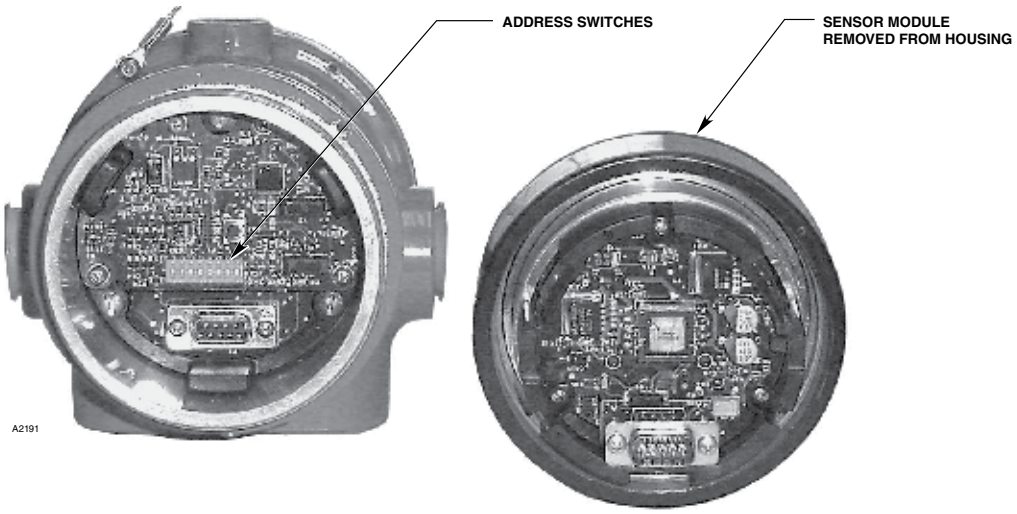

Figure 16—Location of Address Switches

SETTING DEVICE NETWORK ADDRESSES (EQ and EQP Models Only)

Overview of Network Addresses

Each device on the LON must be assigned a unique address. Addresses 1 to 4 are reserved for the controller. Valid addresses for field devices are from 5 to 250.

IMPORTANT

If the address is set to zero or an address above 250, the switch setting will be ignored.

Duplicated addresses are not automatically detected. Modules given the same address will use the number given and report to the controller using that address. The status word will show the latest update, which could be from any of the reporting modules using that address.

Setting Field Device Addresses

Selection of the node address is done by setting rocker switches on an 8 switch "DIP Switch Assembly" within the detector's housing. Refer to Figure 16 for switch location.

⚠ WARNING

The network address switches are located within the detector housing. Disassembly of the detector head that contains powered electrical circuits is required to gain access to the network address switches. For hazardous areas, the area must be de-classified before attempting disassembly of the device. Always observe precautions for handling electrostatic sensitive devices.

The address number is binary encoded with each switch having a specific binary value with switch 1 being the LSB (Least Significant Bit), see Figure 17. The device's LON address is equal to the added value of all closed rocker switches. All "Open" switches are ignored.

Example: for node No. 5, close rocker switches 1 and 3 (binary values 1 + 4); for node No. 25, close rocker switches 1, 4 and 5 (binary values 1 + 8 + 16).

NOTE

*The field device sets the LON address only when power is applied to the device. Therefore, it is important to set the switches **before** applying power. If an address is ever changed, system power must be cycled before the new address will take effect.*

After setting address switches, record the address number and device type.

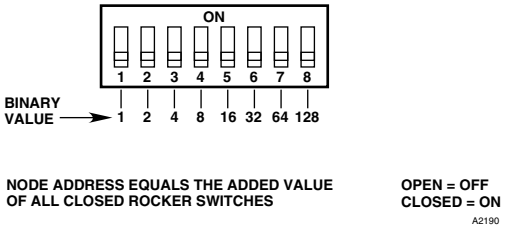

Figure 17—Address Switches for X5200

STARTUP PROCEDURE

When installation of the equipment is complete, perform the "Fire Alarm Test" below.

FIRE ALARM TEST

1. Disable any extinguishing equipment that is connected to the system.
2. Apply input power to the system.
3. Initiate an **oi** test. (See "Magnetic **oi** / Manual **oi**" under Optical Integrity in the Description section of this manual.
4. Repeat this test for all detectors in the system. If a unit fails the test, refer to the "Troubleshooting" section.
5. Verify that all detectors in the system are properly aimed at the area to be protected. (The Q1201C Laser Aimer is recommended for this purpose.)
6. Enable extinguishing equipment when the test is complete.

Table 4—Current Level Output Troubleshooting Guide

Current Level (±0.3 mA)	Status	Action
0 mA	Power Fault	Check system wiring.
1 mA	General Fault	Cycle power.[1]
2 mA	**oi** Fault	Clean windows.[2]
4 mA	Normal Operation	
8 mA	Hi Background IR (IR pre-alarm)	Remove IR source or aim detector away from IR source.
12 mA	Hi Background UV (UV alarm)	Remove UV source or aim detector away from UV source.
14 mA	Hi Background IR (IR alarm)	Remove IR source or aim detector away from IR source.
16 mA	UV and IR sensors in pre-alarm, or one in alarm and the other in pre-alarm.	If no fire exists, remove UV and IR sources or aim detector away from sources.
20 mA	Fire Alarm	

[1]If fault continues, return device to factory for repair.
[2]See "Maintenance" section for cleaning procedure.

TROUBLESHOOTING

WARNING

The sensor module ("front" half of the detector) contains no user serviceable components and should never be opened. The terminal compartment is the only part of the enclosure that should be opened by the user in the field.

1. Disable any extinguishing equipment that is connected to the unit.
2. Inspect the viewing windows for contamination and clean as necessary. (Refer to the "Maintenance" section for complete information regarding cleaning of the detector viewing windows.)
3. Check input power to the unit.
4. If the fire system has a logging function, check the fire panel log for output status information. See Table 4 for information regarding 0 to 20 mA output.
5. Turn off the input power to the detector and check all wiring for continuity. **Important: Disconnect wiring at the detector before checking system wiring for continuity.**
6. If all wiring checks out and cleaning of the **oi** plate/window did not correct the fault condition, check for high levels of background UV or IR radiation by covering the detector with the factory supplied cover or aluminum foil. If the fault condition clears, extreme background UV or IR radiation is present. Re-adjust the view of the detector away from the UV or IR source or relocate the detector.

If none of these actions corrects the problem, return the detector to the factory for repair.

NOTE

It is highly recommended that a complete spare be kept on hand for field replacement to ensure continuous protection.

MAINTENANCE

IMPORTANT

Periodic flamepath inspections are not recommended, since the product is not intended to be serviced and provides proper ingress protection to eliminate potential deterioration of the flamepaths.

WARNING

The sensor module ("front" half of the detector) contains no user serviceable components and should never be opened. The terminal compartment is the only part of the enclosure that should be opened by the user in the field.

NOTE

Refer to the X5200 Safety manual (95-8672) for specific requirements and recommendations applicable to the proper installation, operation, and maintenance of all SIL-Certified X5200 Fame Detectors.

To maintain maximum sensitivity and false alarm resistance, the viewing windows of the X5200 must be kept relatively clean. Refer to the following procedure for cleaning instructions.

CLEANING PROCEDURE

CAUTION

Disable any extinguishing equipment that is connected to the unit to prevent unwanted actuation.

To clean the windows and **oi** plate, use the window cleaner (p/n 001680-001) with a soft cloth, cotton swab, or tissue and refer to the following procedure:

1. **Disable any extinguishing equipment that is connected to the unit.**

NOTE

Remove input power when cleaning the detector windows. The rubbing motion on the surface of the windows during cleaning can create static electricity that could result in unwanted output activation.

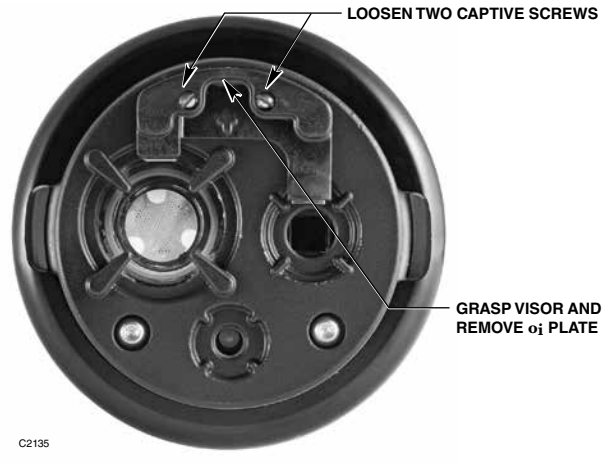

Figure 18—**oi** Plate Removal

2. Clean the viewing windows and reflective surfaces of the **oi** plate using a clean cloth, cotton swab, or tissue with the window cleaning solution. Use Isopropyl alcohol for contaminations that the window cleaning solution can not remove. If a fault condition is still indicated after cleaning, remove and clean the **oi** plate using the **oi** Plate Removal and Replacement procedure.

IMPORTANT

*When used in extreme environments, the reflective surface of the detector **oi** plate may eventually deteriorate, resulting in reoccurring **oi** faults and the need for **oi** plate replacement.*

oi PLATE REMOVAL AND REPLACEMENT

1. **Disable any extinguishing equipment that is connected to the unit.**
2. Loosen the two captive screws, then grasp the **oi** plate by the visor and remove it from the detector. See Figure 18.
3. Install the new (or cleaned) **oi** plate.
4. Recalibrate the detector's **oi** system. Refer to the Inspector Monitor manual (95-8581) for instructions regarding **oi** plate replacement and **oi** system recalibration.

CAUTION

***Do not** replace the **oi** reflector plate without also recalibrating the **oi** system.*

Recalibration of the **oi** system requires the use of the Inspector Connector Cable and Inspector Monitor Software. These two items are included in the **oi** replacement kit, or they can be purchased separately. See Ordering Information for details.

PERIODIC CHECKOUT PROCEDURE

In compliance with SIL 2, a checkout of the system using the Mag **oi** or Man **oi** feature should performed regularly to ensure that the system is operating properly. Refer to Table 1 in the X5200 Safety manual (95-8672) for frequency of proof tests. To test the system, perform the "Fire Alarm Test" as described in the "Startup Procedure" section of this manual.

CLOCK BATTERY

The real time clock has a backup battery that will operate the clock with no external power. Return the device to the factory for battery replacement if needed.

NOTE

If the backup battery is depleted, there is no effect on the operation of the flame detector, but the time stamping of the data log may be affected.

FEATURES

- Responds to a fire in the presence of modulated blackbody radiation (i.e. heaters, ovens, turbines) without false alarm.
- High speed capability.
- Built-in data logging / event monitoring, up to 1500 events (up to 1000 general, 500 alarms).
- Microprocessor controlled heated optics for increased resistance to moisture and ice.
- Automatic, manual or magnetic **oi** testing.
- Easily replaceable **oi** plate.
- Fire, fault and auxiliary relays standard.
- 0 to 20 mA isolated output (optional).
- Eagle Quantum Premier LON/SLC output (optional).
- HART communication (optional)
- FDT/DTM capable
- A tri-color LED on the detector faceplate indicates normal condition and notifies personnel of fire alarm or fault conditions.
- Operates under adverse weather conditions.
- Mounting arm allows easy sighting.
- Integral wiring compartment for ease of installation.
- Explosion-proof/flame-proof detector housing. Meets FM, CSA, ATEX and CE certification requirements.
- Class A wiring per NFPA-72.
- Meets NFPA-33 response requirement for under 0.5 second (available when model selected).
- 3 year warranty.
- Advanced signal processing (ARC/TDSA).
- RFI and EMC Directive compliant.

Associated Manuals

List of X5200 related manuals:

TITLE	FORM NUMBER
Pulse	95-8547
EQP	95-8533
SIL 2 (Safety)	95-8672
HART Addendum	95-8636
Q9033 Mounting Arm and Collar Attachment	95-8686
Inspector Monitor Software for X-Series Flame Detectors	95-8581

SPECIFICATIONS

OPERATING VOLTAGE—
24 Vdc nominal (18 Vdc minimum, 30 Vdc maximum). Maximum ripple is 2 volts peak-to-peak.

POWER CONSUMPTION—
Without heater: 2.8 watts at 24 Vdc nominal;
4.8 watts at 24 Vdc in alarm.
3.1 watts at 30 Vdc nominal;
5.4 watts at 30 Vdc in alarm.
Heater only: 8 watts maximum.
Total power: 17.5 watts at 30 Vdc with EOL resistor installed and heater on maximum.
EOL resistor must be ceramic, wirewound type, rated 5 watts minimum, with actual power dissipation not to exceed 2.5 watts.

For HART models, refer to Addendum number 95-8636.

POWER UP TIME—
Fault indication clears after 0.5 second; device is ready to indicate an alarm condition after 30 seconds.

OUTPUT RELAYS—
Fire Alarm relay, Form C, 5 amperes at 30 Vdc:
The Fire Alarm relay has redundant terminals and normally open / normally closed contacts, normally de-energized operation, and latching or non-latching operation.

Fault relay, Form A, 5 amperes at 30 Vdc:
The Fault relay has redundant terminals and normally open contacts, normally energized operation, and latching or non-latching operation.

Auxiliary relay, Form C, 5 amperes at 30 Vdc:
The auxiliary relay has normally open / normally closed contacts, normally energized or de-energized operation, and latching or non-latching operation.

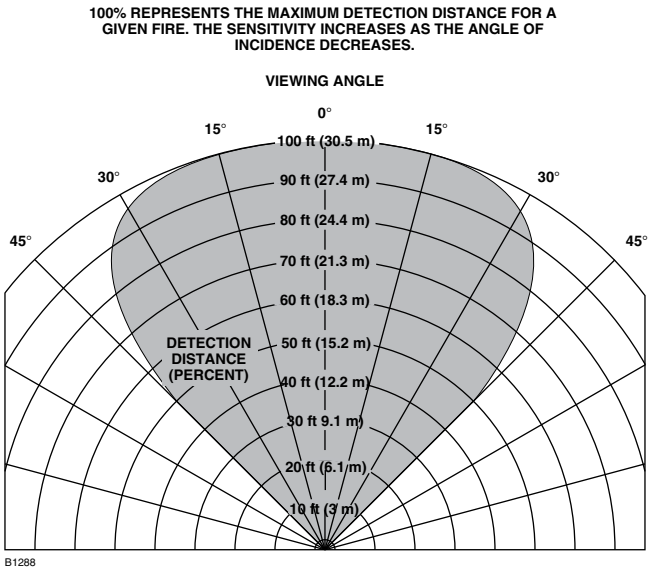

Figure 19—Detector Cone of Vision

CURRENT OUTPUT (Optional)—
0 to 20 milliampere (±0.3 mA) dc current, with a maximum loop resistance of 500 ohms from 18 to 19.9 Vdc and 600 ohms from 20 to 30 Vdc.

LON OUTPUT—
Digital communication, transformer isolated (78.5 kbps).

TEMPERATURE RANGE—
Operating: –40°F to +167°F (–40°C to +75°C).
Storage: –67°F to +185°F (–55°C to +85°C).
Hazardous location ratings from –55°C to +75°C available on flameproof model.

HUMIDITY RANGE—
0 to 95% relative humidity, can withstand 100% condensing humidity for short periods of time.

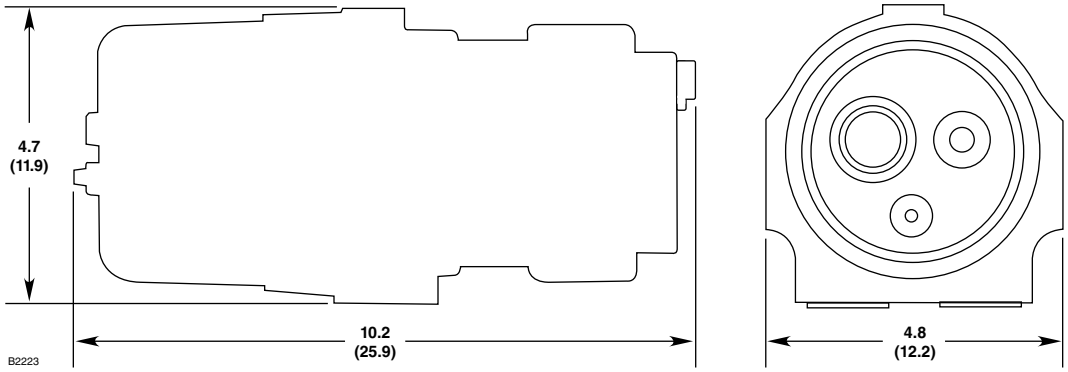

Figure 20—Dimensions in Inches (cm)

CONE OF VISION—
The detector has a 90° cone of vision (horizontal) with the highest sensitivity lying along the central axis. See Figure 19.

RESPONSE TIME—
32 inch methane plume: < 10 seconds.
1 foot x 1 foot n-Heptane: < 15 seconds.
(See Appendix A for details.)

SOURCE TUBE—
Contains radioactive isotope Krypton 85 (Kr^{85})
Calculated Activity: 14,800 Becquerels (0.4µCi).

ENCLOSURE MATERIAL—
Copper-free aluminum (painted) or Stainless Steel (316/CF8M Cast).

VIBRATION—
Conformance per FM 3260: 2000, MIL-STD 810C (Curve AW).

DIMENSIONS—
See Figure 20.

WIRING—
Field wiring screw terminals are UL/CSA rated for up to 14 AWG wire, and are DIN/VDE rated for 2.5 mm^2 wire. Screw terminal required torque range is 3.5–4.4 in.-lbs. (0.4-0.5 N·m).

Important: 18 Vdc minimum must be available at the detector. For ambient temperatures below –10°C (14°F) and above +60°C (140°F) use field wiring suitable for both minimum and maximum ambient temperature.

THREAD SIZE—
Conduit connection: Four entries, 3/4 inch NPT or M25. Conduit seal not required.

SHIPPING WEIGHT (Approximate)—
Aluminum: 7 pounds (3.2 kilograms).
Stainless Steel: 14.6 pounds (6.7 kilograms).
Mounting Arm (AL): 6 pounds (2.75 kilograms).
Mounting Arm (SS): 14 pounds (6.4 kilograms).

WARRANTY PERIOD—
3 years.

CERTIFICATION—

For complete approval details, refer to the appropriate Appendix:

Appendix A - FM
Appendix B - CSA
Appendix C - ATEX/CE
Appendix D - IECEx
Appendix E - EN54
Appendix F - Additional approvals

REPLACEMENT PARTS

The detector is not designed to be repaired in the field. If a problem should develop, refer to the Troubleshooting section. If it is determined that the problem is caused by an electronic defect, the device must be returned to the factory for repair.

REPLACEMENT PARTS

Part Number	Description
009208-002	**oi** Replacement kit for X52/X22/X98 (5 Reflector Plates) with Inspector Connector and Monitor
007307-002	Replacement **oi** Reflector Plate for X52/X22/X98 (requires Inspector Connector to calibrate)

NOTE: Refer to Instruction Manual 95-8530 to determine the correct **oi** Replacement Plate.

DEVICE REPAIR AND RETURN

Prior to returning devices, contact the nearest local Detector Electronics office so that a Return Material Identification (RMI) number can be assigned. **A written statement describing the malfunction must accompany the returned device or component to assist and expedite finding the root cause of the failure. When items are being returned, please note:**

NOTE

Shipping personnel must be hazmat trained to pack, mark, and label the return package. Please consult your country-specific regulations.

Pack the unit properly. Always use sufficient packing material. Where applicable, use an antistatic bag as protection from electrostatic discharge.

NOTE

Det-Tronics reserves the right to apply a service charge for repairing returned product damaged as a result of improper packaging.

Return all equipment transportation prepaid to the factory in Minneapolis.

NOTE

It is highly recommended that a complete spare be kept on hand for field replacement to ensure continuous protection.

NOTE

Radioactive material is subject to regulation. All products containing a source tube meet the definition of an "excepted package" for radioactive material under the US Department of Transportation (DOT), the International Air Transport Association (IATA), the International Civil Aviation Organization (ICAO), the International Maritime Dangerous Goods Code (IMDG), and any other specific hazardous material regulations from the country of source of return (TDG, RID, ADR, etc.). These units are classified as "UN2911, Radioactive Material, Excepted Package – Article."

ORDERING INFORMATION

When ordering, please specify:

X5200 UVIR Flame Detector

Refer to the X5200 Model Matrix below for details

Q9033 Mounting Arm is required:

- Q9033A for aluminum detectors only
- Q9033B for aluminum and stainless steel detectors

ACCESSORIES

Part Number	Description
000511-029	Converter RS485 to RS232
103881-001	Converter RS485 to USB
007819-001	W6300B1002 Serial Inspector Connector (Inspector Monitor software included)
007819-002	W6300B1003 USB Inspector Connector (Inspector Monitor software included)
009207-001	Flame Inspector Monitor CD
103922-001	Model 475 HART Communicator
102740-002	Magnet
008082-001	Magnet and Adapter for Extension Pole
007739-001	Magnet and Extension Pole
007240-001	Q1116A1001, Air Shield (AL)
007818-001	Q1118A1001 Aluminum Air Shield/Flange Mount (AL)
007818-002	Q1118S1001 Stainless Steel Air Shield/Flange Mount (SS)
009177-001	Q1120A1001 Paint Shield mounting ring (AL)
006097-001	Q1201 Laser
102871-001	Laser Battery, 3V Lithium (laser)
007255-001	Q1201C1001 X-Series Laser Holder (AL/Plastic)
007338-001	Q2000A1001 X-Series Weather Shield (AL)
007290-001	Q9033B Stainless Steel Mounting Arm Assembly is for aluminum and stainless steel detectors
007290-002	Q9033A Aluminum Mounting Arm Assembly is for aluminum detectors only
011385-001	Q9033 Collar Attachment
101197-001	Stop Plug, 3/4" NPT, AL
101197-004	Stop Plug, 3/4" NPT, SS
101197-005	Stop Plug, M25, AL, IP66
101197-003	Stop Plug, M25, SS, IP66
010816-001	Stop Plug, 20 Pack, 3/4"NPT, AL
010817-001	Stop Plug, 20 Pack, 3/4"NPT, SS
010818-001	Stop Plug, 20 Pack, M25, AL, IP66
010819-001	Stop Plug, 20 Pack, M25, SS, IP66
103363-001	14 mm Hex Wrench (Steel)
103406-001	Screwdriver
107427-040	O-ring - Rear Cover (Viton)
005003-001	1 oz grease for detectors (non-silicon)
001680-001	Window cleaner (6 pack)

X5200 MODEL MATRIX

MODEL	DESCRIPTION
X5200	UV/IR Flame Detector
X5200M	UV/IR Flame Detector with Molybdenum Tube

TYPE	MATERIAL
A	Aluminum
S	Stainless Steel (316)

TYPE	THREAD TYPE
4M	4 Port, Metric M25
4N	4 Port, 3/4" NPT

TYPE	OUTPUTS
11	Relay
13	Relay and 4-20 mA
14	Eagle Quantum Premier (EQP)
15	Relay and Pulse
16	Addressable Module Only (Third Party Type)*
23	HART, Relay and 4-20 mA
24	Eagle Quantum

TYPE	APPROVALS**
B	INMETRO (Brazil)
R	VNIIPO/VNIIFTRI (Russia)
T	SIL/FM/CSA/ATEX/CE/IECEx
W	FM/CSA/ATEX/CE/IECEx

TYPE	CLASSIFICATION
1	Division/Zone Ex d e
2	Division/Zone Ex d

*The Addressable Module Only (Type 16) is not FM approved.
**Type *Approvals* can use one or more letters to designate the approvals of the product.

APPENDIX A

FM APPROVAL AND PERFORMANCE REPORT

THE FOLLOWING ITEMS, FUNCTIONS AND OPTIONS DESCRIBE THE FM APPROVAL:

- Explosion-proof for Class I, Div. 1, Groups B, C and D (T5) Hazardous (Classified) Locations per FM 3615.
- Dust-ignition proof for Class II/III, Div. 1, Groups E, F and G (T5) Hazardous (Classified) Locations per FM 3615.
- Nonincendive for Class I, Div. 2, Groups A, B, C and D (T3) Hazardous (Classified) Locations per FM 3611.
- Nonincendive for Class II, Div. 2, Groups F and G (T3) Hazardous (Classified) Locations per FM 3611.
- Enclosure rating NEMA/Type 4X per NEMA 250.
- Ambient Temperature Limits: –40°F to +167°F (–40°C to +75°C).
- Automatic Fire Alarm Signaling Performance verified per FM 3260 (2000).

Flameproof per ANSI/ISA 60079-0, -1, -7

for Class I, Zone 1 -

AEx d e IIC T5-T6 Gb; T5 (Tamb –40°C to +75°C); T6 (Tamb –40°C to +60°C)
AEx d IIC T5-T6 Gb; T5 (Tamb –40°C to +75°C); T6 (Tamb –40°C to +60°C)

for Zone 21 -

AEx tb IIIC T80°C Db
Tamb –40°C to +75°C

Degree of protection provided by Enclosure IP66/67, Hazardous Locations for use in the U.S.

The following accessories are FM approved for use with the X5200 Flame Detector:

Part Number	Description
102740-002	Magnet
007739-001	Magnet and Extension Pole
007290-001	Q9033B Stainless Steel Mounting Arm Assembly is for aluminum and stainless steel detectors
007290-002	Q9033A Aluminum Mounting Arm Assembly is for aluminum detectors only
011385-001	Q9033 Collar Attachment

The following performance criteria were verified:

AUTOMATIC OPTICAL INTEGRITY TEST:

The detector generated an optical fault in the presence of contamination on any single or combination of lens surfaces resulting in a loss of approximately 50% of its detection range, verifying that the detector performs a calibrated Automatic **oi** test for each sensor. Upon removal of the contamination, the detector fault was cleared and the detector was verified to detect a fire.

MANUAL OPTICAL INTEGRITY TEST:

The Manual / Magnetic **oi** performs the same calibrated test as the Automatic **oi**, and additionally actuates the alarm relay to verify output operation. If there is a 50% loss of its detection range, an alarm signal is not generated.

The **oi** test procedure, as described in the "Magnetic **oi** / Manual **oi**" section of this instruction manual, is the approved external optical test method for this detector to verify end-to-end detector function. This test replaces the function and need of a traditional external test lamp.

RESPONSE CHARACTERISTICS

High Sensitivity UV & IR, Hi Arc, TDSA On, Quick Fire Off

Fuel	Size	Distance feet (m)	Typical Response Time (seconds)*
n-Heptane	1 x 1 foot	50 (15.2)	7
Methane	32 inch plume	35 (10.7)	3.5

*Add 2 seconds for EQP model.

High Sensitivity UV & IR, Very Hi Arc, TDSA On, Quick Fire Off

Fuel	Size	Distance feet (m)	Typical Response Time (seconds)*
n-Heptane	1 x 1 foot	50 (15.2)	8

*Add 2 seconds for EQP model.

High Sensitivity UV & IR, Very Hi Arc, TDSA On, Quick Fire On

Fuel	Size	Distance feet (m)	Typical Response Time (seconds)*
n-Heptane	1 x 1 foot	50 (15.2)	8

*Add 2 seconds for EQP model.

High Sensitivity UV, Low Sens. IR, Hi Arc, TDSA On, Quick Fire Off

Fuel	Size	Distance feet (m)	Typical Response Time (seconds)*
n-Heptane	1 x 1 foot	15 (4.6)	9

*Add 2 seconds for EQP model.

High Sensitivity UV, Very High Sens. IR, Arc Off, TDSA On, Quick Fire On

Fuel	Size	Distance feet (m)	Typical Response Time (seconds)*
Methane	32 inch plume	15 (4.6)	0.12

*Add 2 seconds for EQP model.

High Sensitivity UV, Very High Sens. IR, Hi Arc, TDSA On, Quick Fire On

Fuel	Size	Distance feet (m)	Typical Response Time (seconds)*
Methane	32 inch plume	15 (4.6)	0.3

*Add 2 seconds for EQP model.

Very High Sensitivity UV & IR, Low Arc, TDSA On, Quick Fire On

Fuel	Size	Distance feet (m)	Typical Response Time (seconds)*
n-Heptane	1 x 1 foot	85 (25.9)	14
Methane	32 inch plume	65 (19.8)	5

*Add 2 seconds for EQP model.

High Sensitivity UV, Very High Sensitivity IR, Hi Arc, TDSA On, Quick Fire Off

Fuel	Size	Distance feet (m)	Typical Response Time (seconds)*
n-Heptane	1 x 1 foot	60 (18.3)	6
Methane	32 inch plume	65 (19.8)	9

*Add 2 seconds for EQP model.

Medium Sensitivity UV, High Sensitivity IR, Hi Arc, TDSA On, Quick Fire On

Fuel	Size	Distance feet (m)	Typical Response Time (seconds)*
n-Heptane	1 x 1 foot	50 (15.2)	5
Methane	32 inch plume	60 (18.3)	5

*Add 2 seconds for EQP model.

RESPONSE CHARACTERISTICS IN THE PRESENCE OF FALSE ALARM SOURCES

High Sensitivity, Hi Arc, TDSA On, Quick Fire Off

False Alarm Source	Distance feet (m)	Fire Source	Distance feet (m)	Average Response Time (seconds)*
Sunlight, direct, modulated/unmodulated	—	2 inch dia Heptane	10 (3)	< 30
Sunlight, reflected, modulated/unmodulated	—	2 inch dia Heptane	10 (3)	< 30
70 w sodium vapor lamp, unmodulated	5 (1.5)	2 inch dia Heptane	5 (1.5)	3
70 w sodium vapor lamp, modulated	5 (1.5)	2 inch dia Heptane	5 (1.5)	3
250 w mercury vapor lamp, unmodulated	5 (1.5)	2 inch dia Heptane	5 (1.5)	2
250 w mercury vapor lamp, modulated	5 (1.5)	2 inch dia Heptane	5 (1.5)	3
300 w incandescent lamp, unmodulated	5 (1.5)	2 inch dia Heptane	5 (1.5)	4
300 w incandescent lamp, modulated	5 (1.5)	2 inch dia Heptane	5 (1.5)	3
500 w shielded quartz halogen lamp, unmodulated	5 (1.5)	2 inch dia Heptane	5 (1.5)	2
500 w shielded quartz halogen lamp, modulated	5 (1.5)	2 inch dia Heptane	5 (1.5)	2
1500 w electric quartz heater, unmodulated	10 (3)	2 inch dia Heptane	5 (1.5)	3
1500 w electric quartz heater, modulated	10 (3)	2 inch dia Heptane	3 (0.9)	11
Two 34 w fluorescent lamps, unmodulated	3 (0.9)	2 inch dia Heptane	10 (3)	3
Two 34 w fluorescent lamps, modulated	3 (0.9)	2 inch dia Heptane	10 (3)	5
Arc welding	15 (4.6)	2 inch dia Heptane	5 (1.5)	N/A

*Add 2 seconds for EQP model.

FALSE ALARM IMMUNITY

High Sensitivity, Hi Arc, TDSA On, Quick Fire Off

False Alarm Source	Distance feet (m)	Modulated Response	Unmodulated Response
Sunlight, direct, reflected	—	No alarm	No alarm
Vibration	N/A	No alarm	No alarm
Arc welding	15 (4.6)	No alarm	No alarm
70 w sodium vapor lamp	3 (0.9)	No alarm	No alarm
250 w mercury vapor lamp	3 (0.9)	No alarm	No alarm
300 w incandescent lamp	3 (0.9)	No alarm	No alarm
500 w shielded quartz halogen lamp	3 (0.9)	No alarm	No alarm
1500 w electric quartz heater	10 (3)	No alarm	No alarm
Two 34 w fluorescent lamps	3 (0.9)	No alarm	No alarm

FIELD OF VIEW

High Sensitivity UV & IR, Hi Arc, TDSA On, Quick Fire Off

Fuel	Size	Distance feet (m)	Horizontal (degrees)	Typical Horz. Response Time (seconds)*	Vertical (degrees)	Typical Vert. Response Time (seconds)*
n-Heptane	1 x 1 foot	25 (7.6)	+45 –45	5 8	+45 –30	4 8
Methane	32 inch plume	17.5 (5.3)	+45 –45	3 4	+45 –30	4 4

*Add 2 seconds for EQP model.

High Sensitivity UV & IR, Very Hi Arc, TDSA On, Quick Fire On

Fuel	Size	Distance feet (m)	Horizontal (degrees)	Typical Horz. Response Time (seconds)*	Vertical (degrees)	Typical Vert. Response Time (seconds)*
n-Heptane	1 x 1 foot	25 (7.6)	+45 –45	12 9	+45 –30	13 6

*Add 2 seconds for EQP model.

High Sensitivity UV, Low Sensitivity IR, Hi Arc, TDSA On, Quick Fire Off

Fuel	Size	Distance feet (m)	Horizontal (degrees)	Typical Horz. Response Time (seconds)*	Vertical (degrees)	Typical Vert. Response Time (seconds)*
n-Heptane	1 x 1 foot	7.5 (2.2)	+45 –45	6 6	+45 –30	9 6

*Add 2 seconds for EQP model.

High Sensitivity UV, Very High Sensitivity IR, Arc Off, TDSA On, Quick Fire On

Fuel	Size	Distance feet (m)	Horizontal (degrees)	Typical Horz. Response Time (seconds)*	Vertical (degrees)	Typical Vert. Response Time (seconds)*
Methane	32 inch plume	7.5 (2.2)	+45 –45	0.9 0.2	+45 –30	0.1 0.1

*Add 2 seconds for EQP model.

Very High Sensitivity UV & IR, Low Arc, TDSA On, Quick Fire On

Fuel	Size	Distance feet (m)	Horizontal (degrees)	Typical Horz. Response Time (seconds)*	Vertical (degrees)	Typical Vert. Response Time (seconds)*
n-Heptane	1 x 1 foot	42.5 (13)	+45 –45	12 14	+45 –30	11 13
Methane	32 inch plume	32.5 (9.9)	+45 –45	5 7	+45 –30	6 6

*Add 2 seconds for EQP model.

High Sensitivity UV, Very High Sensitivity IR, Hi Arc, TDSA On, Quick Fire Off

Fuel	Size	Distance feet (m)	Horizontal (degrees)	Typical Horz. Response Time (seconds)*	Vertical (degrees)	Typical Vert. Response Time (seconds)*
n-Heptane	1 x 1 foot	30 (9.1)	+45 –45	8 8	+45 –30	10 7
Methane	32 inch plume	32.5 (9.9)	+45 –45	4 5	+45 –30	5 5

*Add 2 seconds for EQP model.

Medium Sensitivity UV, High Sensitivity IR, Hi Arc, TDSA On, Quick Fire On

Fuel	Size	Distance feet (m)	Horizontal (degrees)	Typical Horz. Response Time (seconds)*	Vertical (degrees)	Typical Vert. Response Time (seconds)*
n-Heptane	1 x 1 foot	25 (7.6)	+45 –45	15 7	+45 –30	7 9
Methane	32 inch plume	30 (9.1)	+45 –45	8 6	+45 –30	8 12

*Add 2 seconds for EQP model.

MODEL X5200M

The X5200M uses a sensor that has a broader spectrum than the standard sensor. It is designed to detect fires with unusual chemistry such as black powder. Consult factory for usage recommendations.

X5200M RESPONSE CHARACTERISTICS

High Sensitivity UV & IR, Arc Off, TDSA On, Quick Fire On

Fuel	Size	Distance feet (m)	Typical Response Time (seconds)
Black Powder	40 grams	10 (3)	0.12

X5200M RESPONSE CHARACTERISTICS IN THE PRESENCE OF FALSE ALARMS

High Sensitivity UV & IR, Arc Off, TDSA On, Quick Fire On

False Alarm Source	Distance feet (m)	Fire Source	Distance feet (m)	Typical Response Time (seconds)
Sunlight, direct, reflected, modulated & unmodulated	—	2 inch dia Heptane	10 (3)	< 15
70 w sodium vapor lamp, unmodulated	3 (0.9)	1 x 1 foot n-Heptane	40 (12)	5
70 w sodium vapor lamp, modulated	3 (0.9)	1 x 1 foot n-Heptane	40 (12)	< 1
250 w vapor lamp, unmodulated	3 (0.9)	1 x 1 foot n-Heptane	40 (12)	11
250 w vapor lamp, modulated	3 (0.9)	1 x 1 foot n-Heptane	40 (12)	< 1
300 w incandescent lamp, unmodulated	3 (0.9)	1 x 1 foot n-Heptane	40 (12)	7
300 w incandescent lamp, modulated	3 (0.9)	1 x 1 foot n-Heptane	40 (12)	6
500 w halogen lamp, unmodulated	3 (0.9)	1 x 1 foot n-Heptane	40 (12)	< 1
500 w halogen lamp, modulated	3 (0.9)	1 x 1 foot n-Heptane	40 (12)	11
1500 w electric radiant heater, unmodulated	10 (3)	1 x 1 foot n-Heptane	40 (12)	< 1
1500 w electric radiant heater, modulated	10 (3)	1 x 1 foot n-Heptane	40 (12)	< 1
2-34 w fluorescent lamps, unmodulated	3 (0.9)	1 x 1 foot n-Heptane	40 (12)	15
2-34 w fluorescent lamps, modulated	3 (0.9)	1 x 1 foot n-Heptane	40 (12)	< 1

X5200M FALSE ALARM IMMUNITY

High Sensitivity UV & IR, Arc Off, TDSA On, Quick Fire On

False Alarm Source	Distance feet (m)	Modulated Response	Unodulated Response
Sunlight, direct, reflected	—	No alarm	No alarm
Arc welding	15 (4.6)	No alarm	No alarm
70 w sodium vapor lamp	3 (0.9)	No alarm	No alarm
250 w vapor lamp	3 (0.9)	No alarm	No alarm
300 w incandescent lamp	3 (0.9)	No alarm	No alarm
500 w halogen lamp	3 (0.9)	No alarm	No alarm
1500 w electric radiant heater	3 (0.9)	No alarm	No alarm
2-34 w fluorescent lamps	3 (0.9)	No alarm	No alarm

X5200M FIELD OF VIEW

High Sensitivity UV & IR, Arc Off, TDSA On, Quick Fire On

Fuel	Size	Distance feet (m)	Horizontal (degrees)	Typical Horz. Response Time (seconds)	Vertical (degrees)	Typical Horz. Response Time (seconds)
Black Powder	40 grams	5 (1.5)	+45 –45	0.1 0.1	+45 –30	0.1 0.1

APPENDIX B

CSA APPROVAL

PRODUCTS

CLASS 4818 04 - SIGNAL APPLIANCES - Systems - For Hazardous Locations
Class I, Division 1, Groups B, C, and D (T5); Class II, Division 1, Groups E, F, and G (T5);
Class I, Division 2, Groups A, B, C, and D (T3); Class II, Division 2, Groups F and G (T3);
Class III; Enclosure NEMA/Type 4X;

Ultraviolet Infrared Flame Detector/Controller X5200 series, rated 18-30 Vdc, 2.8 Watts to 17.5 Watts.
Relay contacts rated 5 Amps @ 30 Vdc.

APPLICABLE REQUIREMENTS

CSA Std C22.2 No. 25-1966	–	Enclosures for use in Class II Groups E, F & G Hazardous Locations.
CSA Std C22.2 No. 30-M1986	–	Explosion-Proof Enclosures for Use in Class I Hazardous Locations.
CAN/CSA C22.2 No. 94-M91	–	Special Purpose Enclosures.
CSA Std C22.2 No. 142-M1987	–	Process Control Equipment.
CSA Std C22.2 No. 213-M1987	–	Nonincendive Electrical Equipment for Use in Class I, Division 2 Hazardous Locations.

The following accessories are CSA approved for use with the X5200 Flame Detector:

Part Number	Description
102740-002	Magnet
007739-001	Magnet and Extension Pole
007290-001	Q9033B Stainless Steel Mounting Arm Assembly is for aluminum and stainless steel detectors
007290-002	Q9033A Aluminum Mounting Arm Assembly is for aluminum detectors only
011385-001	Q9033 Collar Attachment

APPENDIX C

ATEX / CE APPROVAL

EC-TYPE EXAMINATION CERTIFICATE

DEMKO 02 ATEX 132195X

Increased Safety Model	Flameproof Model
CE 0539 Ex II 2 G II 2 D	CE 0539 Ex II 2 G II 2 D
Ex d e IIC T6–T5 Gb	Ex d IIC T6–T5 Gb
Ex tb IIIC T80°C	Ex tb IIIC T80°C
T6 (Tamb = –50°C to +60°C)	T6 (Tamb = –55°C to +60°C)
T5 (Tamb = –50°C to +75°C)	T5 (Tamb = –55°C to +75°C)
IP66/IP67.	IP66/IP67.

Compliance with:

EN 60079-0: 2009
EN 60079-1: 2007
EN 60079-7: 2007
EN 60079-31: 2009
EN / IEC 60529: 2001.

INSTALLATION INSTRUCTIONS

The field wiring connections in the terminal compartment are ATEX certified and accepts wiring specifications from 14-24 AWG or 2.5-0.2 mm^2.

The flame detector model X5200UVIR shall be installed according to the instructions given by the manufacturer.

The cable entry devices shall be certified in type of explosion protection flameproof enclosure "d" for use with the terminal compartment in type of explosion protection flameproof enclosure "d", or in type of explosion protection increased safety "e" for use with the terminal compartment in type of explosion protection increased safety "e". They shall be IP66/IP67 rated, suitable for the conditions of use and correctly installed.

Unused entries shall be closed with suitable certified blanking elements.

The metal housing for the Ultraviolet Infrared (UVIR) flame detector type X5200 must be electrically connected to earth ground.

For ambient temperatures below –10°C and above +60°C use field wiring suitable for both minimum and maximum ambient temperature.

Special conditions for safe use:

The EOL resistor can only be used within the flameproof terminal compartment.

EOL resistors must be ceramic, wirewound type, rated 5 watts minimum, with actual power dissipation not to exceed 2.5 watts.

The Ultraviolet Infrared (UVIR) flame detector type X5200 is to be installed in places where there is a low risk of mechanical damage.

NOTE

Operational performance verified from –40°C to +75°C.

NOTE

An optional third party addressable module can only be used within the Ex d flameproof model unless the addressable module is component certified as Ex e for use within the Ex d e increased safety model.

NOTE

Refer to "EOL Resistors" section for installation details. All cable entry devices and blanking elements shall be certified to "E-generation" or "ATEX" standards, in type of explosion protection increased safety "e" or flameproof enclosure "d" (as applicable), suitable for the conditions of use and correctly installed. They shall maintain the degree of ingress protection IP66/IP67 for the apparatus. Unused conduit entries shall be closed with suitable blanking elements.

NOTE

For ATEX installations, the X5200 detector housing must be electrically connected to earth ground.

The following accessories are ATEX approved for use with the X5200 Flame Detector:

Part Number	Description
007290-001	Q9033B Stainless Steel Mounting Arm Assembly is for aluminum and stainless steel detectors
007290-002	Q9033A Aluminum Mounting Arm Assembly is for aluminum detectors only
011385-001	Q9033 Collar Attachment

APPENDIX D

IECEx APPROVAL

IECEx CERTIFICATE OF CONFORMITY

DEMKO

IECEx ULD 06.0018X

Ex d e IIC T6-T5 Gb		Ex d IIC T6-T5 Gb
Ex tb IIIC T80°C		Ex tb IIIC T80°C
T6 (Tamb = –50°C to +60°C)	or	T6 (Tamb = –55°C to +60°C)
T5 (Tamb = –50°C to +75°C)		T5 (Tamb =–55°C to +75°C)
IP66/IP67.		IP66/IP67.

Compliance with:

IEC 60079-0: 2007, Ed. 5
IEC 60079-1: 2007, Ed. 6
IEC 60079-7: 2006, Ed. 4
IEC 60079-31: 2008, Ed. 1
EN / IEC 60529: 2001.

INSTALLATION INSTRUCTIONS

The field wiring connections in the terminal compartment are suitable certified and accepts wiring specifications from 14-24 AWG or 2.5-0.2 mm^2.

The flame detector model X5200UVIR shall be installed according to the instructions given by the manufacturer.

The cable entry devices shall be certified in type of explosion protection flameproof enclosure "d" for use with the terminal compartment in type of explosion protection flameproof enclosure "d", or in type of explosion protection increased safety "e" for use with the terminal compartment in type of explosion protection increased safety "e". They shall be IP66/IP67 rated, suitable for the conditions of use and correctly installed.

Unused entries shall be closed with suitable certified blanking elements.

The metal housing for the Ultraviolet Infrared (UVIR) flame detector type X5200 must be electrically connected to earth ground.

For ambient temperatures below –10°C and above +60°C use field wiring suitable for both minimum and maximum ambient temperature.

Special conditions for safe use:

The EOL resistor can only be used within the flameproof terminal compartment.

EOL resistors must be ceramic, wirewound type, rated 5 watts minimum, with actual power dissipation not to exceed 2.5 watts.

The Ultraviolet Infrared (UVIR) flame detector type X5200 is to be installed in places where there is a low risk of mechanical damage.

The following accessories are IECEx approved for use with the X5200 Flame Detector:

Part Number	Description
007290-001	Q9033B Stainless Steel Mounting Arm Assembly is for aluminum and stainless steel detectors
007290-002	Q9033A Aluminum Mounting Arm Assembly is for aluminum detectors only
011385-001	Q9033 Collar Attachment

APPENDIX E

EN54 APPROVALS

AGENCY	Conventional Output		LON Output	
	Certificate/Approval Number	Basis of Approval	Certificate/Approval Number	Basis of Approval
VdS – Construction Product Directive	0786 – CPD – 20778	EN 54-10 + A1	—	—
VdS	G 203085	VdS 2344 VdS 2504 EN 54-10 + A1	—	—
	S 212002*	VdS 2344 EN 54-13	S 212002*	VdS 2344 EN 54-13
BRE – EC – Certificate of Conformity	—	—	0832 – CPD – 1383	EN 54-10 + A1 EN 54-17
LPCB	973e/02	EN 54-10 + A1	973a/02	EN 54-10 + A1 EN 54-17

* Approved for use in conjunction with the EN54-13 compliant EQP System.

INSTRUCTIONS FOR THE APPLICATION OF THE APPROVAL COMPONENT/SYSTEM

The installation shall take into account, that the orientation arrow on the flame detector is directed upwards, as the view angle in this direction is <90°.

The UVIR-flame detector corresponds to class 1.

The following accessories are EN54-10 and EN54-17 approved for use with the X5200 Flame Detector:

Part Number	Description
102740-002	Magnet
007739-001	Magnet and Extension Pole
007290-001	Q9033B Stainless Steel Mounting Arm Assembly is for aluminum and stainless steel detectors
007290-002	Q9033A Aluminum Mounting Arm Assembly is for aluminum detectors only
011385-001	Q9033 Collar Attachment

APPENDIX F

ADDITIONAL APPROVALS

SIL 2



IEC 61508

Certified SIL 2 Capable.
Applies to specific models – refer to the SIL 2 Certified X5200 Safety Manual (95-8672) for details.

RUSSIA



VNIIFTRI
CERTIFICATE OF CONFORMITY GOST R 51330.X-99

2ExdeIICT6/T5 IP66
T6 (Tamb = –55°C to +60°C)
T5 (Tamb = –55°C to +75°C).

– OR –

1ExdIICT6/T5 IP66
T6 (Tamb = –55°C to +60°C)
T5 (Tamb = –55°C to +75°C)



VNIIPO
CERTIFICATE OF CONFORMITY TO TECHNICAL REGULATIONS, GOST R 53325-2009

BRAZIL



UL-BRHZ-0061X

Ex d e IIC T6-T5 Gb IP66/IP67
T6 (Tamb = –50°C to +60°C)
T5 (Tamb = –50°C to +75°C).

– OR –

Ex d IIC T6-T5 Gb IP66/IP67
T6 (Tamb = –55°C to +60°C)
T5 (Tamb = –55°C to +75°C).

95-8546



X3301 Multispectrum
IR Flame Detector



PointWatch Eclipse®
IR Combustible Gas Detector



FlexVu® Universal Display
w/ GT3000 Toxic Gas Detector



Eagle Quantum Premier®
Safety System

Detector Electronics Corporation
6901 West 110th Street
Minneapolis, MN 55438 USA

T: 952.941.5665 or 800.765.3473
F: 952.829.8750
W: http://www.det-tronics.com
E: det-tronics@det-tronics.com

DET-TRONICS
United Technologies

Det-Tronics, oi (Optical Integrity), PointWatch Eclipse, FlexVu, and Eagle Quantum Premierare registered trademarks or trademarks of Detector Electronics Corporation in the United States, other countries, or both. Other company, product or service names may be trademarks or service marks of others.

© Copyright Detector Electronics Corporation 2013. All rights reserved

GENERAL MONITORS
Protection for life.

MODEL S4000CH

Intelligent Sensor for Combustible Gas Detection



Features

- Compatible with Automatic Remote Gas Calibrator
- Event logging
- HART and Modbus communication
- 4-20 mA output
- Warning, Alarm & Fault Relays
- Calibration, Calibration Check, Setup Modes
- Remaining sensor life indication

Benefits

- Fully automatic calibration
- Stores fault, gas check, calibration, and alarm event history
- Provides complete status and control capability in the control room
- Industry standard output for remote alarm and fault indication
- Provides local alarm capability
- Simplifies operation and maintenance
- Reduces downtime by providing an estimate of remaining sensor life

Description

The Model S4000CH Intelligent Sensor is a microprocessor-based transmitter designed for use with General Monitors' catalytic bead sensors. The unit features one person calibration and can virtually self-calibrate by simply activating a magnetic switch and applying gas. It is designed to monitor combustible gases and vapors within the lower explosive limit (LEL) and provide status indication and alarm outputs.

All of the Model S4000CH electronics are contained within an explosion-proof housing so that sensor information can be processed at the sensor site. The detector uses a 4-20 mA analog output signal that is proportional to 0 to 100% LEL gas concentration at the sensor. In addition, the Model S4000CH includes warning, alarm, and fault relay contacts that can be used to indicate an alarm or fault condition and dual redundant Modbus or HART communication. Configurations with relays, Modbus, and HART are available to meet many needs.

The Model S4000CH also includes a three-digit LED display. This local display continuously indicates gas concentrations during normal operation or in the Gas Check Mode, calibration prompts during Calibration Mode, display codes during the Setup Mode, and eight fault codes.

The Model S4000CH has four different operating modes. First, a normal operating mode in which alarms are active and the display and 4-20 mA readings are proportional to the gas concentration at the sensor. Second, a gas check mode that allows the user to apply a gas and check the sensor response while alarm outputs are inhibited. Third, a calibration mode in which gas is applied to the sensor to calibrate the unit. Finally, a setup mode which allows the user to review or change setup options such as relay settings, calibration level, and Modbus parameters.

Selecting Setup Mode on the Model S4000CH is accomplished by using the magnetic switch or HART or Modbus command. Options include:

- Calibration level
- Energized/de-energized relays
- Latching/non-latching relays
- Alarm set points for relays
- Baud rate, data format, and address for each Modbus channel

MODEL S4000CH

System Specifications

Sensor Type: Continuous diffusion, low temperature catalytic bead

Sensor Life: 3 to 5 years

Accuracy: ±3% LEL up to 50% LEL
±5% LEL ≥ 51% LEL

Zero Drift: Less than 5% of full scale per year

Response Time: T_{50} <10 s T_{90} <30 s with 100% LEL methane applied

Measuring Ranges: 0-100% LEL

Modes: Calibration, gas check, setup

Electrical Classification:

CSA/FM: Class I, Division 1, Groups B, C & D; Class I, Zone 1, IIB+H_2, T6, Type 4X (T_{amb} = -40°C to +75°C)

ATEX: II 2 G EEx d IIB+H_2 T5, IP66 (T_{amb} = -40°C to +70°C)

Warranty: Two years

Approvals: CE Marking, CSA, FM, ATEX, IECEx approved. Complies with ANSI/ISA 12.13.01-2000 and EN61779-1,-4, HART registered, SIL 2 / 3 suitable

Environmental Specifications

Operating Temperature Range:

Electronics	-40°F to 167°F (-40°C to 75°C)
Standard Sensor	-65°F to 200°F (-55°C to 93°C)
High Temp Sensor	-65°F to 400°F (-55°C to 200°C)

Storage Temperature Range: -58°F to 185°F (-50°C to 85°C)

Operating Humidity Range: 5% to 100% RH, non-condensing

Mechanical Specifications

Length: 6.4 inches (161 mm)

Height: 3.4 inches (86 mm)

Width: 4.1 inches (104 mm)

Weight: 5.5 lbs. (2.5 kg) - AL
14.0 lbs. (6.4kg) - SS

Mounting Holes: 5.0 inches (127 mm) (center to center)

Housing: Marine aluminum or stainless steel

Electrical Specifications

Input Power: 24 VDC nominal, 20 to 36 VDC 250 mA max.

Relay Ratings: *(Optional)* 8A @ 250 VAC / 8A @ 30 VDC res. max. (3x) SPDT - Warning, Alarm & Fault

Analog Signal: 0-20 mA (650 Ohms max. load)

Malfunction	0 mA†
Gas Check/Calibrate	1.5 mA‡
Setup mode	1.5 mA‡
Zero reading	4 mA ± .05 mA
0-100% LEL	4-20 mA
Over-range	20-22 mA

RFI/EMI Protection: Complies with EN50270, EN61000-6-4

Status Indicators: Three-digit LED display with gas concentration, Warn and Alarm LED's, calibration prompts, fault codes, and setup options

RS-485 Output: *(Optional)* Dual redundant Modbus RTU, suitable for linking up to 128 units or up to 247 units with repeaters

Baud Rate: 2400, 4800, 9600, or 19200 BPS

HART: *(Optional)* HART 6, HART Device Description Language available. AMSAware

Faults Monitored: Calibration error, sensor error, low DC supply, EEPROM, EPROM, setup error, gas check time exceeded, switch error, ARGC, internal error

Cable Requirements: Three-wire shielded cable. Max. distance between S4000CH and power source @ 24 VDC nominal (20-Ohm loop):
14 AWG - 2303 ft (702 m)

Max. distance for analog output (650 Ohms max):
14 AWG - 9000 ft (2740 m)

Wireless Communication: Available with ELPRO Technologies wireless transmitters

Standard Configuration: **S4000CH-1-0-01-1**
4-20 mA, standard aluminum sensor, aluminum housing

Specifications subject to change without notice.

Represented by:

Publication #: DS-S4000CH-C1212e

† Under HART, current values can be either 3.5 mA or 1.25 mA, depending on user selection.
‡ Under HART, current value can be either 3.5 mA or 1.5 mA, depending on user selection.

General Monitors Worldwide



www.generalmonitors.com

Lake Forest, CA
26776 Simpatica Circle
Lake Forest, California 92630
Tel: +1-949-581-4464
Fax: +1-949-581-1151
Email: info@generalmonitors.com

Houston, TX
9776 Whithorn Drive
Houston, Texas 77095
Tel: +1-281-855-6000
Fax: +1-281-855-3290
Email: gmhou@generalmonitors.com

Ireland
Ballybrit Business Park
Galway
Republic of Ireland
Tel: +353-91-751175
Fax: +353-91-751317
Email: info@gmil.ie

Singapore
No. 2 Kallang Pudding Road
#09-16 Mactech Building
Singapore 349307
Tel: +65-6748-3488
Fax: +65-6748-1911
Email: genmon@gmpacifica.com.sg

United Arab Emirates
P.O. Box 61209
Jebel Ali
Dubai
United Arab Emirates
Tel: +971-4-8143814
Fax: +971-4-8857587
Email: gmme@generalmonitors.ae

United Kingdom
Heather Close
Lyme Green Business Park
Macclesfield, Cheshire
United Kingdom, SK11 0LR
Tel: +44-1625-619583
Fax: +44-1625-619098
Email: info@generalmonitors.co.uk

Model S4000CH

Intelligent Sensor for Combustible Gas Detection

The information and technical data disclosed in this document may be used and disseminated only for the purposes and to the extent specifically authorized in writing by General Monitors.

Instruction Manual **05-13**

General Monitors reserves the right to change published specifications and designs without prior notice.

Part No. **MANS4000CH**
Revision **H/05-13**

This page intentionally left blank

Table of Contents

TABLE OF FIGURES ..... **VI**

TABLE OF TABLES ..... **VII**

QUICK START GUIDE **1**

Mounting and Wiring 1
Tools Required 1
Terminal Connections 3

1.0 INTRODUCTION **5**

1.1 Protection for Life 5
1.2 Special Warnings 5
1.3 System Integrity Verification 6

2.0 PRODUCT DESCRIPTION **8**

2.1 General Description 8

3.0 INSTALLATION **10**

3.1 Receipt of Equipment 10
3.2 Tools Required 10
3.3 Choosing Product Locations 10
3.3.1 Remote Mounting of the Sensor from the Electronics 11
3.4 Mounting and Wiring 11
3.5 Terminal Connections 13
3.5.1 Terminal Block TB1 – Sensor Connections 15
3.5.2 Terminal Block TB2 – Power and Signal Connections 15
3.5.3 DC Power and COM Connections 17
3.5.4 Analog Signal Connections 17
3.5.5 ARGC Terminal Connections 18
3.5.6 Terminal Block TB3 – Relay Connections 18
3.5.7 European Union (EU) Approved Applications 19
3.5.8 Cable Termination in the Non-Hazardous Area 19
3.6 Maintaining the X/P Integrity 20
3.7 Start-Up Checklist 21
3.8 Start-Up 21
3.9 Relay Reset 21
3.10 User Selectable Options 22
3.11 Available Separate Purchase Options 22
3.11.1 Model S4000CH User Menu Structure 23
3.11.2 Calibration Level 24
3.11.3 Warning Relay Settings 24
3.11.4 Alarm Relay Settings 24
3.11.5 Modbus Channel 1 Settings 25
3.11.6 Modbus Channel 2 Settings 25
3.12 HART/Modbus SELECT 26
3.13 Gas Check Mode 26
3.13.1 Calibration Check 26
3.14 Calibration 27

3.14.1 Calibration Procedure 27
3.14.2 Aborting Calibration....28
3.14.3 Adjustable Calibration Level 29
3.14.4 Remaining Sensor Life....29
3.14.5 Initializing the Remaining Sensor Life....29
3.15 Calibration Equipment....29
3.15.1 Portable Purge Calibrator 29
3.16 Remote Gas Calibrator 30
3.17 ARGC Gas Control....30
3.18 Automatic Remote Gas Calibrator (ARGC) 31
3.19 Calibration Using the ARGC 31

4.0 MAINTENANCE 33

4.1 General Maintenance....33
4.2 Storage....33

5.0 TROUBLESHOOTING 34

5.1 Fault Codes & Their Remedies....34
5.1.1 F2 Failed to Complete Calibration 34
5.1.2 F3 Flash Checksum Error 34
5.1.3 F4 Sensor Error....34
5.1.4 F5 Unused....35
5.1.5 F6 Low Supply Voltage 35
5.1.6 F7 EEPROM Error 35
5.1.7 F8 Failure to Complete Setup 35
5.1.8 F9 Gas Check Period Exceeded....35
5.1.9 F10 Switch Error 35
5.1.10 F11 Internal Error....36
5.1.11 F12 ARGC fault....36
5.2 General Monitors' Offices....36

6.0 MODBUS INTERFACE 37

6.1 Baud Rate 37
6.2 Data Format 37
6.3 Modbus Read Status Protocol (Query/Response)....37
6.3.1 Modbus Read Query Message 37
6.3.2 Modbus Read Response Message....37
6.4 Modbus Write Command Protocol (Query/Response) 38
6.4.1 Modbus Write Query Message 38
6.4.2 Modbus Write Response Message 38
6.5 Function Codes Supported 38
6.6 Exception Responses and Exception Codes....38
6.6.1 Exception Response 38
6.6.2 Exception Code....39
6.7 S4000CH Command Register Locations....40
6.8 S4000CH Command Register Details 42
6.8.1 Analog (00h)....42
6.8.2 Mode (01h)....42
6.8.3 Status/Error (03h)....43
6.8.4 Unit Type (04h) 43
6.8.5 Software Revision (05h)....43
6.8.6 Status Block (06h)....43

6.8.7 Analog Value (06h) 43
6.8.8 Mode & Error (07h) 44
6.8.9 Error & Sensor Life (08h) 44
6.8.10 Display (0x09h & 0x0Ah) 44
6.8.11 Serial Number (0Bh/0Ch) 45
6.8.12 Alarm Settings (0Dh) 45
6.8.13 Warn Settings (0Eh) 45
6.8.14 Com1 Address (0Fh) 46
6.8.15 Com1 Baud Rate (10h) 46
6.8.16 Com1 Data Format (11h) 46
6.8.17 Com2 Address (12h) 47
6.8.18 Com2 Baud Rate (13h) 47
6.8.19 Com2 Data Format (14h) 48
6.8.20 Calibration Level (15h) 48
6.8.21 Reset Alarms (16h) 48
6.8.22 Sensor Life (17h) 48
6.8.23 HazardWatch (Co – Calibration Output) (19h) 49
6.8.24 ARGC (1Ah) 49
6.8.25 PLC Remote Gas Calibration 49
6.8.26 HART Enable (1Dh) 49
6.8.27 HART Test (1Eh) 49
6.8.28 Abort Calibration (1Fh) 50
6.8.29 Total Receive Errors (20h) 50
6.8.30 Bus Activity Rate % (21h) 50
6.8.31 Function Code Errors (22h) 50
6.8.32 Starting Address Errors (23h) 50
6.8.33 Number of Register Errors (24h) 50
6.8.34 RXD CRC Errors Hi (25h) 50
6.8.35 RXD CRC Errors Lo (Same as Hi) (26h) 50
6.8.36 Parity Errors (27h) 50
6.8.37 Overrun errors (28h) 51
6.8.38 Framing Errors (29h) 51
6.8.39 Total Software CH1 Errors (2Ah) 51
6.8.40 New Sensor Calibration (2Bh) 51
6.8.41 Clear Hardware Errors (2Ch) 51
6.8.42 Clear Communication Errors (2Dh) 51
6.8.43 User Information (60h to 6Fh) 55
6.8.44 Total Receive Errors (70h) 55
6.8.45 Bus Activity Rate % (71h) 55
6.8.46 Function Code Errors (72h) 55
6.8.47 Starting Address Errors (73h) 55
6.8.48 Number of Register Errors (74h) 55
6.8.49 RXD CRC Errors Hi (75h) 56
6.8.50 RXD CRC Errors Lo (Same as Hi) (76h) 56
6.8.51 Parity Errors (77h) 56
6.8.52 Overrun Errors (78h) 56
6.8.53 Framing Errors (79h) 56
6.8.54 Total software CH1 errors (7Ah) 56

7.0 APPENDIX 57

7.1 Warranty 57
7.2 Principle of Operation 57
7.3 Specifications 58

7.3.1 System Specifications....58
7.3.2 Mechanical Specifications....58
7.3.3 Electrical Specifications....58
7.3.4 Cable Requirements....59
7.3.5 Remote Sensor Cable Lengths....60
7.3.6 Environmental Specifications....61
7.4 Approvals....61
7.5 Sensitivities to Other Gases....61
7.6 Spare Parts and Accessories....63
7.6.1 Sensors....63
7.6.2 Sensor Housing....63
7.6.3 Sensor Accessories....63
7.6.4 Calibration Equipment....63
7.6.5 S4000CH Replacement Parts....64
7.6.6 Recommended Spare Parts for One (1) Year....64
7.7 FM Approval....65

Table of Figures

Figure 1: Outline and Mounting Dimensions in inches 1
Figure 2: Outline and Mounting Dimensions (ARGC) in inches 1
Figure 3: Sensor Remote Installation in inches 2
Figure 4: ARGC Remote Installation 2
Figure 5: Spring Type Terminal Block Operation 3
Figure 6: Screw Type Terminal Block Operation 3
Figure 7: Model S4000CH Intelligent Sensor 8
Figure 8: Model S4000CH Intelligent Sensor with ARGC 9
Figure 9: ARGC Remote Junction Box Assembly (P/N 80155-1) 9
Figure 10: Outline and Mounting Dimensions in inches 12
Figure 11: Outline and Mounting Dimensions (ARGC) in inches 12
Figure 12: S4000CH Terminal Block Locations 14
Figure 13: Remote Junction Box Terminal Block 14
Figure 14: Spring Type Terminal Block Operation 15
Figure 15: Screw Type Terminal Block Operation 16
Figure 16: Wire Strip Length 16
Figure 17: Relay Protection for DC and AC Loads 19
Figure 18: Relay Reset 22
Figure 19: User Menu Structure 23
Figure 20: Calibration Check 26
Figure 21: Automatic Calibration Mode 28
Figure 22: Calibration in Progress Mode 28
Figure 23: Calibration Complete Mode 28
Figure 24: Remote Gas Calibrator (RGC, P/N 80153-1) 30
Figure 25: ARGC Gas Control (P/N 80154-1) 30
Figure 26: Calibration Complete Mode 32

Table of Tables

Table 1: TB2 Power and Signal Connections 15
Table 2: Ground or Common Connections 17
Table 3: Power Connections 17
Table 4: Analog Signal Connections 18
Table 5: Alarm Relay Connections 18
Table 6: Warn Relay Connections 18
Table 7: Fault Relay Connections 19
Table 8: GM Locations 36
Table 9: Data Format 37
Table 10: Exception Codes 39
Table 11: Com1 Baud Rate 46
Table 12: Com1 Data Format 46
Table 13: Current Chart 47
Table 14: Com2 Baud Rate 48
Table 15: Com2 Data Format 48
Table 16: 24 VDC Cable Lengths with Relays 59
Table 17: 24 VDC Cable Lengths w/o Relays 59
Table 18: ARGC Cable Lengths 60
Table 19: Analog Output Cable Lengths 60
Table 20: Sensor Cable Lengths 60
Table 21: Chemical List 62

Quick Start Guide

Mounting and Wiring

Tools Required

- "5mm" Allen head wrench to remove enclosure lid (included with gas detector).
- Flat-head screwdriver maximum 3/16" (5 mm) width for terminal block connections (included with gas detector).
- Adjustable wrench for conduit or cable gland connections (not included).

Information on Class I Division 1 wiring methods can be found in NEC Article 501.10.

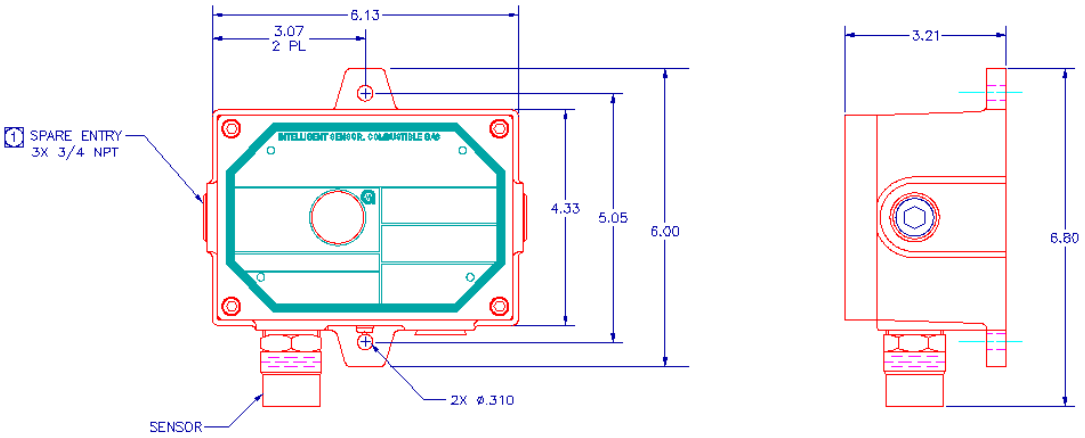

Figure 1: Outline and Mounting Dimensions in inches

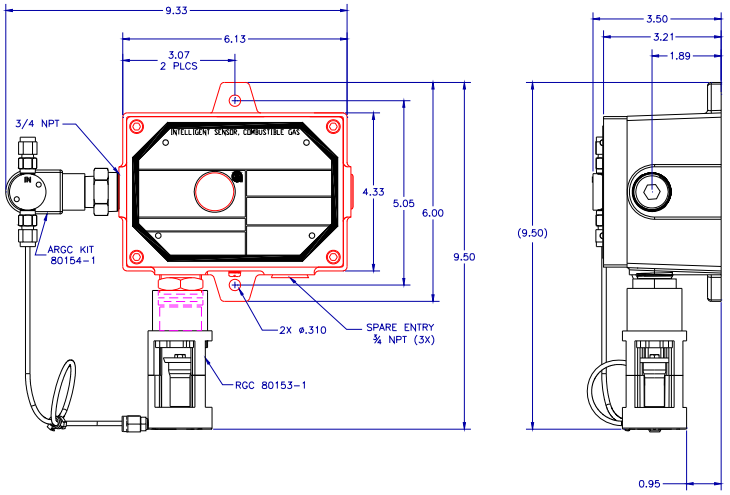

Figure 2: Outline and Mounting Dimensions (ARGC) in inches

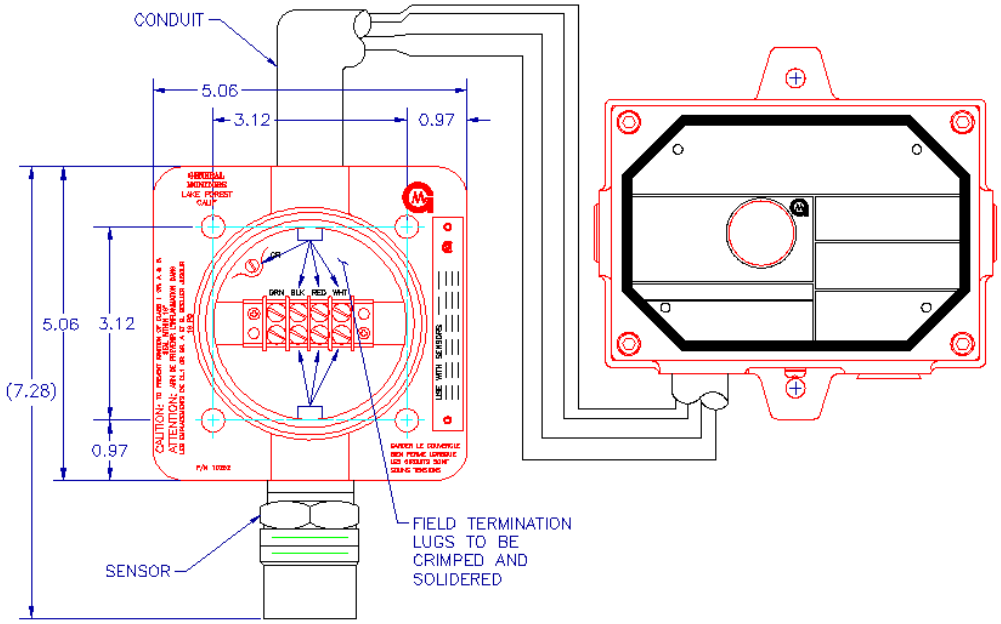

Figure 3: Sensor Remote Installation in inches

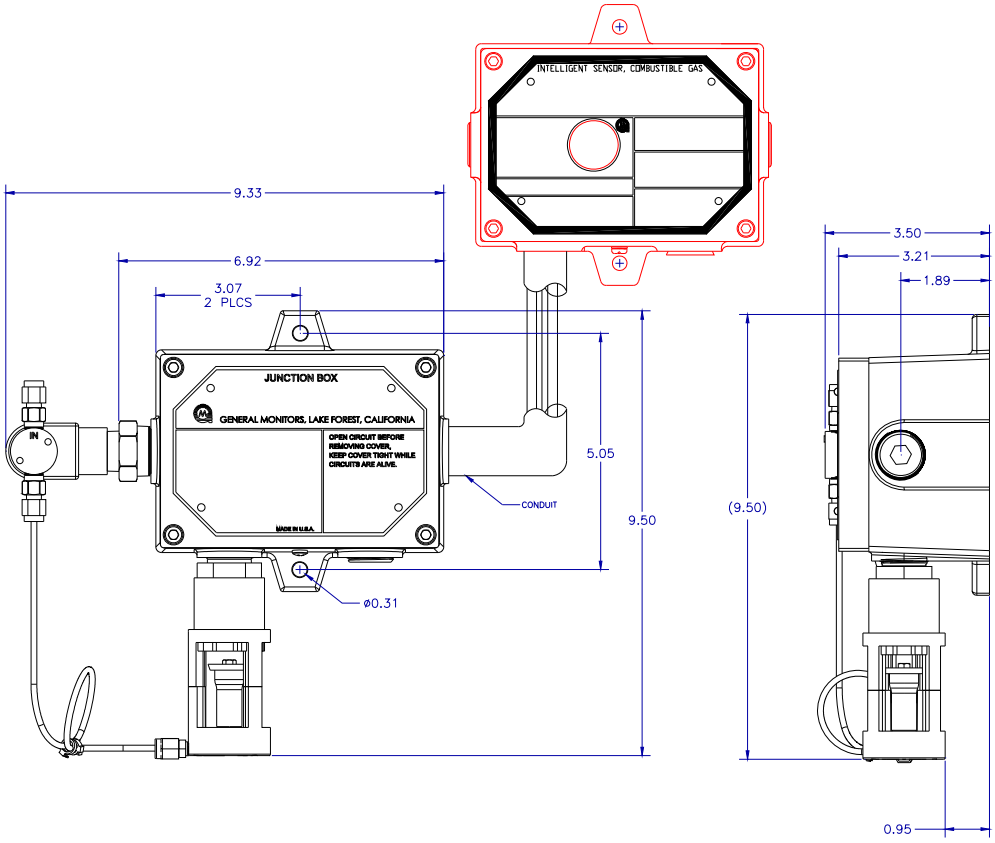

Figure 4: ARGC Remote Installation

Terminal Connections

The terminal blocks (TB) are located inside the housing and can be accessed by removing the cover. A label on the inside of the housing cover provides details of all the terminal connections.

WARNING: Do not connect +24 VDC to TB1. Damage to the electronics or sensor may result.

It is recommended that a minimum three-wire shielded cable be used for making the power and 0-20mA Output connection on TB2 of the S4000CH. It is also recommended that separate two-wire shielded twisted pair cables be used for making the Modbus connections. The spring type terminal block accepts 14 AWG to 20 AWG and the screw type terminal block accepts 12 AWG to 18 AWG stranded or solid wire. Each wire should be stripped before wiring the S4000CH intelligent sensor. To connect wiring to the spring type terminal block, insert a screwdriver into the orange tab and press down (Figure 5), opening the terminal. Insert the wire into the terminal and release the orange tab, clamping the wire in the terminal. Check the hold of the wire by GENTLY tugging it to ensure it is locked in.

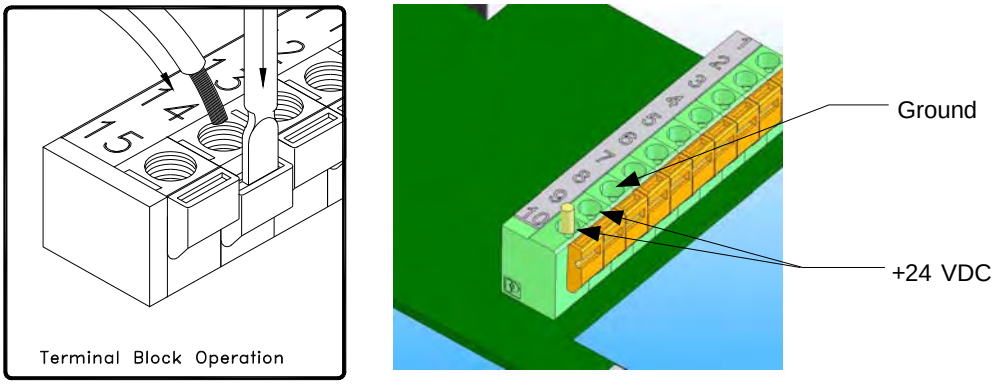

Figure 5: Spring Type Terminal Block Operation

To connect wiring to the screw type terminal block, (Figure 6) use a screwdriver to loosen the top screw counter clockwise. Insert the wire into the terminal and tighten the top screw clockwise. Check the hold of the wire by GENTLY tugging it to ensure it is locked in.

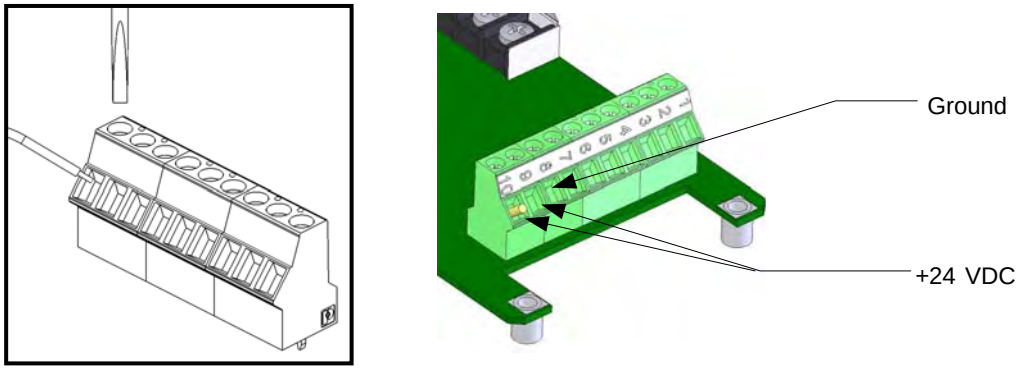

Figure 6: Screw Type Terminal Block Operation

NOTE: Power must remain disconnected until all other wiring connections have been made.

The maximum distance between the S4000CH and the power supply is 3430 feet or 1040 meters (each cable run should be as short as possible). See Section 7.3.4 for cable length specifications.

Connect +24 VDC to TB2, position 9. Connect the ground or common to TB2, position 8.

To connect the analog signal, please refer to Section 3.5.4.

General Monitors recommends that the S4000CH Intelligent Sensor be calibrated one hour after start-up, and that the calibration be checked at least every ninety (90) days to ensure system integrity.

The instrument is now ready to operate. Please consult the manual for more information on the instrument's many features.

NOTE: If you have any problems in the set-up or testing of the detector, please refer to the "Troubleshooting Section", or call the factory direct. See Section 5.2.

1.0 Introduction

1.1 Protection for Life

General Monitors' mission is to benefit society by providing solutions through industry leading safety products, services, and systems that save lives and protect capital resources from the dangers of hazardous flames, gases, and vapors.

This manual provides instruction for installing and operating General Monitors' Model S4000CH for combustible gas detection. While the S4000CH is easy to install and operate, this manual should be read in full and the information contained herein understood before attempting to place the system in service.

The safety products you have purchased should be handled carefully and installed, calibrated, and maintained in accordance with the respective product instruction manual. Remember these products are for your safety.

1.2 Special Warnings

The Model S4000CH Intelligent Sensor contains components, which can be damaged by static electricity. Special care must be taken when wiring the system to ensure that only the connection points are touched.

WARNING: Toxic, combustible and flammable gases and vapors are very dangerous. Extreme caution should be used when these hazards are present.

SPECIAL CONDITIONS OF SAFE USE PERTAINING TO ATEX/IECEx INSTALLATIONS:

The S4000CH has been subjected to performance testing in accordance with EN 60079-29-1 and therefore may be used as a safety related device as defined by ATEX Directive 94/9/EC Annex II clause 1.5.

When alternative detector elements are utilized, they shall only be mounted remotely in a suitable certified enclosure in accordance with requirements of their respective certificates and relevant local requirements. The associated cable shall be connected to the Intelligent Gas Sensors using a suitably certified cable entry device with a ¾" thread form.

The Universal Gas Sensor (11159-1) is suitable for use with the following enclosure types and servicetemperature ranges that are dependent on the type of cement used in their construction; therefore, they shall only be used with the enclosure type and where the surface temperature, at the point of mounting, is as detailed below:

Cement	Ambient Range	Enclosure Type
2850FT Cat 11, 2762 Cat 17	-40°C to +70°C	Enclosures that are certified by a notified body and satisfy the requirements of the current edition of EN 60079-1 or EN 60079-7 and European Directive 94/9/EC.
2850FT Cat 11	-40°C to +120°C	Enclosures that are certified by a notified body and satisfy the requirements of the current edition of EN

		60079-7 and European Directive 94/9/EC.
2762 Cat 17	-40°C to +180°C	Enclosures that are certified by a notified body and satisfy the requirements of the current edition of EN 60079-7 and European Directive 94/9/EC.

1.3 System Integrity Verification

Commissioning Safety Systems

Before power up, verify wiring, terminal connections and stability of mounting for all integral safety equipment including, but not limited to:

- Power supplies
- Control modules
- Field detection devices
- Signaling / output devices
- Accessories connected to field and signaling devices
- Remote Gas Calibrator (RGC) / Automatic Remote Gas Calibrator (ARGC)

After the initial application of power (and any factory specified warm-up period) to the safety system, verify that all signal outputs, to and from devices and modules, are within the manufacturer's specifications. Initial testing should be performed per the manufacturer's recommendations and instructions.

Proper system operation should be verified by performing a full, functional test of all component devices of the safety system, ensuring that the proper levels of alarming occur. Fault/Malfunction circuit operation should be verified.

Periodic Testing of Field Devices

Periodic testing/calibrating should be performed per the manufacturer's recommendations and instructions. Testing/calibrating procedures should include, but not be limited to:

- Verify integrity of all optical surfaces and devices

When testing produces results outside of the manufacturer's specifications, replacement of the suspect device(s) should be performed as necessary. Maintenance intervals should be independently established through a documented procedure, including a maintenance log maintained by plant personnel or third party testing services.

Periodic System Verification

The following system verifications should be performed at least annually:

Verify wiring, terminal connections and stability of mounting for all integral safety equipment including, but not limited to:

- Power supplies

- Control modules
- Field detection devices
- Signaling / output devices
- Accessories connected to field and signaling devices
- RGC or ARGC (if purchased)

2.0 Product Description

2.1 General Description

The Model S4000CH is an intelligent sensor for the detection of combustible gases and vapors. The microprocessor-based electronics process information at the sensor site within an explosion-proof housing.

A digital display provides indications and display codes that can be viewed through a window in the cover. A red LED above the digital display signifies an ALARM condition, while a red LED below the digital display signifies a WARN condition. Analog signal (4-20 mA) and relays provide remote and/or discrete indications of the sensor's operation. Optional dual redundant Modbus, HART or HART and single Modbus provide digital communication.

The Model S4000CH Intelligent Sensor is rated explosion-proof for use in the following hazardous areas:

- CSA/FM: Class I, Division 1, Groups B, C, D and Class I, Zone 1, IIB+H_2
- ATEX/IECEx: Zone 1, Group IIB+ H_2



Figure 7: Model S4000CH Intelligent Sensor



Figure 8: Model S4000CH Intelligent Sensor with ARGC



Figure 9: ARGC Remote Junction Box Assembly (P/N 80155-1)

3.0 Installation

3.1 Receipt of Equipment

All equipment shipped by General Monitors is pre-packed in shock absorbing containers, which provide protection against physical damage (original containers should be kept for future shipping or storage needs).

Shipping container contents should be carefully removed and checked against the packing list. If any damage has occurred, or there is any discrepancy in the order, please notify General Monitors as soon as possible.

All correspondence with General Monitors must specify the equipment part number and serial number.

The factory tests each unit; however, a complete system checkout is suggested upon initial installation to ensure system integrity.



WARNING: Installation and maintenance must be carried out by suitably skilled and competent personnel only.

3.2 Tools Required

- "5 mm" Allen head wrench to remove enclosure lid (included with gas detector).
- Flat-head screwdriver maximum 3/16" (5 mm) width for terminal block connections (included with gas detector).
- Adjustable wrench for conduit or cable gland connections (not included).

3.3 Choosing Product Locations

There are no standard rules for sensor placement, since the optimum sensor location is different for each application. The customer must evaluate conditions at the facility to make this determination. Generally, the Model S4000CH Intelligent Sensor should be easily accessible for calibration checks.

- The sensor should be mounted pointing down to prevent water build-up on the sensor head.
- The sensor should not be placed where contaminating substances may coat it.
- Although the S4000CH is RFI resistant, it should not be mounted in close proximity to radio transmitters or similar equipment.
- Locate the S4000CH where prevailing air currents contain the maximum concentration of gas.
- Locate the S4000CH near possible sources of gas leaks.
- Observe the S4000CH's temperature specification and locate the unit away from concentrated sources of heat.

- Sensors should be mounted in an area that is as free from wind, dust, water, shock, and vibration as possible. See Section 7.3.6 for the environmental specifications of the unit. If the sensor cannot be located away from dust and rain, then we recommend the use of our splashguard GM P/N 10395-1 to help protect the sensor.

Sensors may be adversely affected by prolonged exposure to certain materials. Loss of sensitivity or corrosion may be gradual if such materials are present in low concentrations, or it may be rapid at high concentrations. The more important materials adversely affecting sensors are:

- Constant presence of high concentrations of hydrogen sulfide (H_2S) gas
- Silicones (often contained in greases and aerosols)
- Halides, compounds containing fluorine, chlorine, bromine and iodine
- Heavy metals, e.g. tetraethyl lead
- Caustic and acidic liquids and vapors

The presence of poisons and contaminants in an area does not necessarily preclude the use of a Model S4000CH intelligent sensor. The feasibility of using a sensor in such areas must be determined by an analysis of the specific factors in each application and General Monitors should be consulted before attempting any such installation.

Sensors used in these areas usually require more frequent calibration checks than normal, and typically have a shorter life. In many such applications, the standard two-year warranty would not apply.

WARNING: General Monitors discourages the painting of sensor assemblies. If the sensor head is painted over, the gas will not be able to diffuse into the sensor. If the assembly cover is painted over, the digital display cannot be read.

3.3.1 Remote Mounting of the Sensor from the Electronics

If it is necessary to remotely mount the sensor from the electronics and the housing, the sensor must be mounted in an explosion-proof rated sensor housing (GM P/N 10252-1), and the cable run must be contained in conduit running from the sensor housing to the electronics. See Section 7.3.4 for cable lengths. The maximum cable length to the power supply will be reduced by 10%. See Section 7.7 for FM approval requirements.

General Monitors has accessories that help with remote or difficult to get to locations. The RGC or ARGC facilitate remote gassing.

3.4 Mounting and Wiring

WARNING: Unused cable entry holes must be sealed with a suitably certified ATEX or IECEx explosion-proof stopping plug. Red caps supplied by General Monitors are for dust protection only, and must not be left on the unit when installed.

The outline and mounting dimensions for the S4000CH (Figure 10) should be used when making installation determinations. A complete list of the mechanical specifications can be found in Section 7.3.2.

To prevent possible corrosion due to moisture or condensation, it is recommended that the conduit connected to the S4000CH housing, if used, contain a drain loop.

NOTE: For ATEX and IECEx applications, conduit connections must only be made via suitably certified ATEX (or IECEx as appropriate) conduit stopping boxes.

Information on Class I Division 1 wiring methods can be found in NEC Article 501.10.

WARNING: Acetic acid will cause damage to metal components, metal hardware, ceramic IC's, etc. If damage results from the use of a sealant that outgases acetic acid (RTV silicone), the warranty will be void.

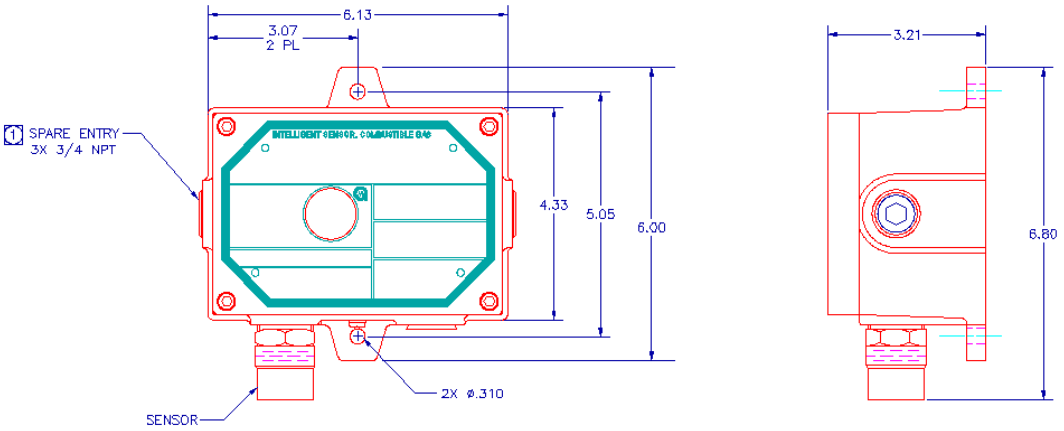

Figure 10: Outline and Mounting Dimensions in inches

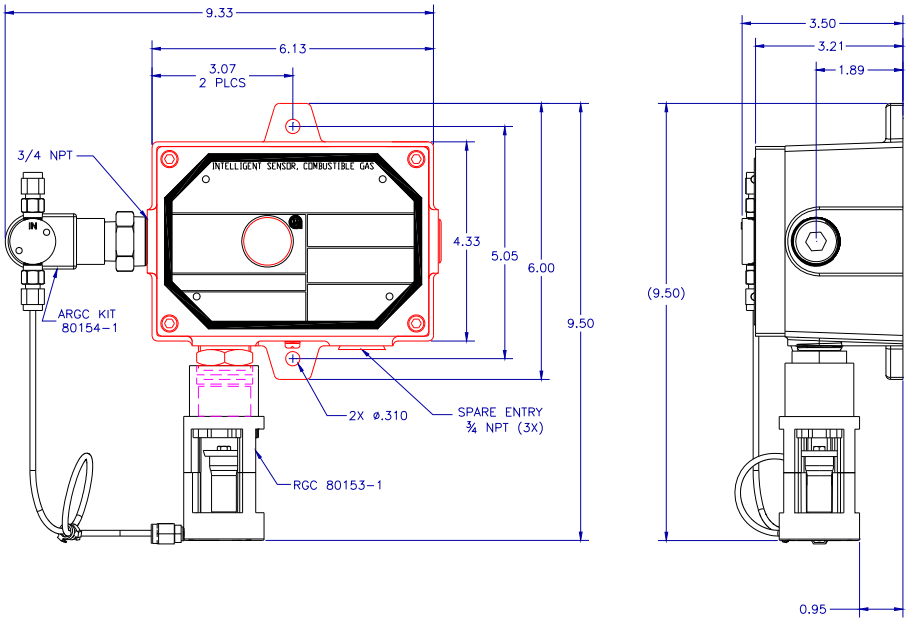

Figure 11: Outline and Mounting Dimensions (ARGC) in inches

Once correctly installed, the S4000CH requires little or no maintenance, other than periodic calibration checks to ensure system integrity. General Monitors recommends that a calibration schedule be established and followed.

NOTE: The S4000CH full two-year warranty will be voided if customer personnel or third parties damage the S4000CH during repair attempts.

Sensor heads exposed to the elements may require the accessory mounting threads to be lubricated. Grease must not be used. As an alternate, PTFE (Teflon) tape may be used on sensor accessory threads.

NOTE: Do not use any material or substance on threads that contact the sensor housing.

The removal of particulate matter from sensor accessories may be done through the use of an appropriate halogen-free solvent. Water and ethanol are examples of suitable solvents. The accessories should be thoroughly dried with compressed air, if necessary, before refitting to the sensor body.

3.5 Terminal Connections

The terminal blocks (TB) are located inside the housing and can be accessed by removing the cover. A label on the inside of the housing cover provides details of all the terminal connections.

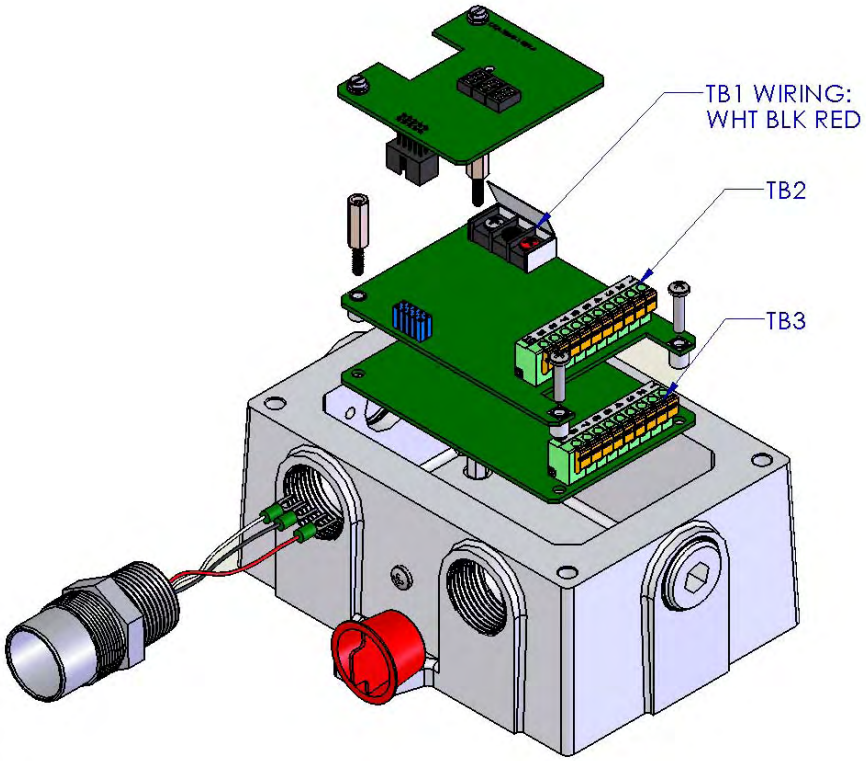

Figure 12: S4000CH Terminal Block Locations

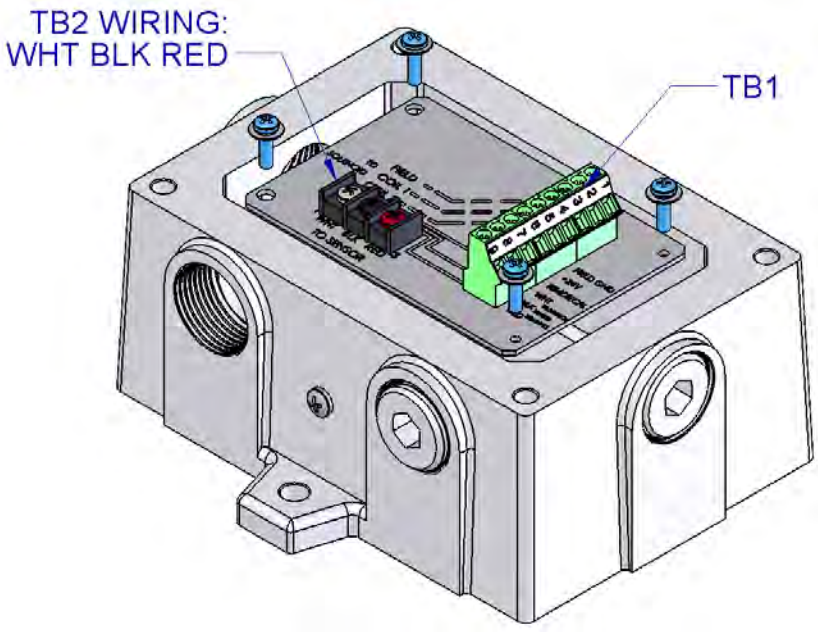

Figure 13: Remote Junction Box Terminal Block

3.5.1 Terminal Block TB1 – Sensor Connections

TB1 contains the three sensor connections, white (W), black (B), and red (R). Remove the display board by loosening the two captive screws on the board and lifting it straight up. Connect the color-coded wires from the combustible sensor to the matching colored terminals on TB1. The label on the inside of the cover can serve as a guide. Replace the display board by pressing it into place, and tightening the two captive screws.

WARNING: Do not connect +24 VDC to TB1. Damage to the electronics will result.

3.5.2 Terminal Block TB2 – Power and Signal Connections

TB2 contains the connections for Power, Relay Reset, Remote Calibration/ARGC, Modbus and 0-20 mA Output Signal. The terminal connections are as follows:

TB2 position	Function
1	0-20 mA Output
2	CH1 Modbus -
3	CH1 Modbus +
4	CH2 Modbus -
5	CH2 Modbus +
6	Remote Calibration/ARGC
7	Relay Reset
8	COM
9	+24 VDC Power
10	+24 VDC Power for ARGC

Table 1: TB2 Power and Signal Connections

It is recommended that a minimum three-wire shielded cable be used for making the power and 0-20mA Output connection on the S4000CH. It is also recommended that separate two-wire shielded twisted pair cables be used for making the Modbus connections. The spring type terminal block accepts 14 AWG to 20 AWG and the screw type terminal block accepts 12 AWG to 18 AWG stranded or solid wire. Each wire should be stripped before wiring the S4000CH. To connect wiring to the spring type terminal block, insert a screwdriver into the orange tab and press down (Figure14), opening the terminal. Insert the wire into the terminal and release the orange tab, clamping the wire in the terminal. Check the hold of the wire by GENTLY tugging it to ensure it is locked in.

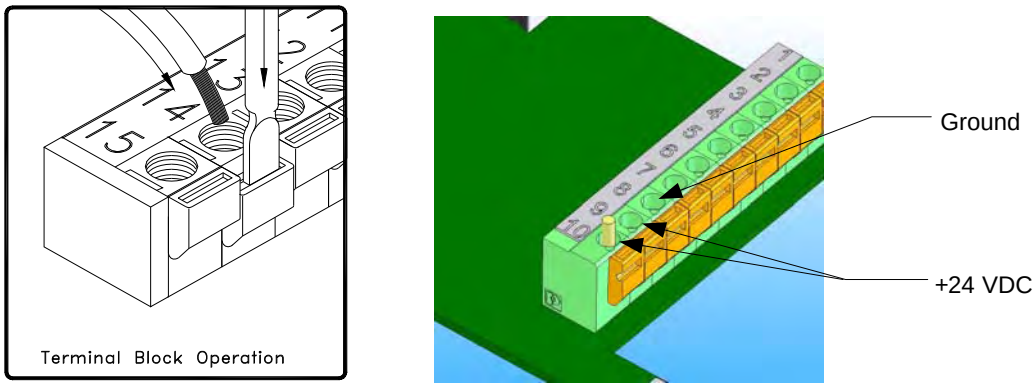

Figure 14: Spring Type Terminal Block Operation

To connect wiring to the screw type terminal block, (Figure 15) use a screwdriver to loosen the top screw counter clockwise. Insert the wire into the terminal and tighten the top screw clock wise. Check the hold of the wire by GENTLY tugging it to ensure it is locked in.

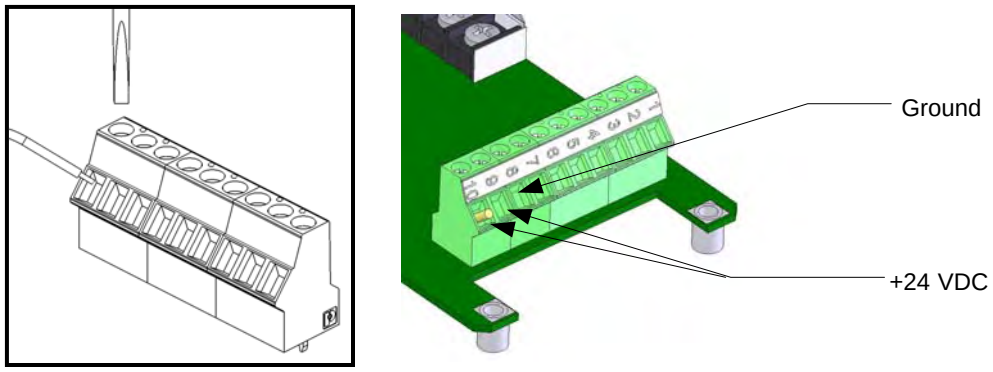

Figure 15: Screw Type Terminal Block Operation

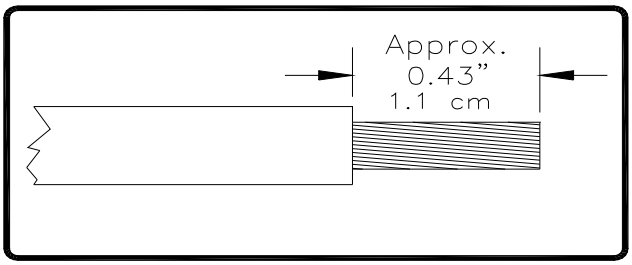

Figure 16: Wire Strip Length

NOTE: Up to 14 AWG wire can be used if it is carefully stripped (Figure 16).

3.5.3 DC Power and COM Connections

The customer must provide primary DC power unless one of the following General Monitors modules is being used with the S4000CH:

- TA102A trip amplifier module with a PS002 power supply & relay module

The following General Monitors modules provide power connections for the S4000CH, but need a customer supplied DC source:

- DC110 Eight-Channel Readout/Relay Display Module
- TA102A Trip Amplifier Module without a PS002

Since the S4000CH is designed to operate continuously, a power switch is not included, in order to prevent accidental system shutdown.

NOTE: Power must remain disconnected until all other wiring connections have been made.

See Section 7.3.4 for cable length specifications.

To connect +24 VDC to the S4000CH, connect the red wire (+24V) to TB2, position 9. Connect the black wire (Ground) to TB2, position 8.

For making power and ground connections to display devices see Table 2 and Table 3.

FROM	TO	
S4000CH	DC110	TA102A
TB2-8 “COM”	Rear COMMON	Rear Pin 30d or 30z

Table 2: Ground or Common Connections

FROM	TO	
S4000CH	DC110	TA102A
TB2-9 “+24 VDC”	Rear CH 1 – 8 24V	Rear Pin 28d or 28z

Table 3: Power Connections

3.5.4 Analog Signal Connections

The S4000CH Intelligent Sensor provides a 4 to 20 mA output signal. It can be sent up to 9000 feet (2740 meters) to a General Monitors readout/relay display module, or an industrial analog to digital converter, or a computer-based monitor, a PLC, a DCS, etc. The 4 to 20 mA signal provides for control room or other locations remote to the S4000CH to display indications of operation and alarm conditions.

To connect the 4 to 20 mA output signal with another unit, connect the wire into TB2, position 1, labeled 4-20 mA OUT. For making output signal connections to display devices (Table 4), refer to the specific manual for that device.

NOTE: Power must remain disconnected until all other wiring connections have been made.

FROM	TO	
S4000CH	DC110	TA102A
TB2-1 4-20 mA Output	Rear CH 1 – 8 4-20 mA	Rear Pin 26d or 26z

Table 4: Analog Signal Connections

If a device other than a General Monitors readout/relay display module is being used, the DC ground, COM, of both systems must be connected together.

3.5.5 ARGC Terminal Connections

The solenoid valve is not polarized. Either wire can go to either terminal. One wire goes to the Calibrate Input/ARGC Output and the other wire goes to the +24 volts.

CAUTION: When the ARGC is used it cannot be used as a calibration input.

3.5.6 Terminal Block TB3 – Relay Connections

TB3 contains the connections for the Relay Contacts (optional). The function for the Warn and Alarm Relay connections vary according to the normal state of the relay. Use the following as a guide for determining the Normally Open (**NO**) and the Normally Closed (**NC**) contact:

TB3 position	Relay Contact(De-Energized)	Relay Contact (Energized)
1	Normally Closed	Normally Open
2	Common	Common
3	Normally Open	Normally Closed

Table 5: Alarm Relay Connections

TB3 position	Relay Contact (De-Energized)	Relay Contact (Energized)
4	Normally Closed	Normally Open
5	Common	Common
6	Normally Open	Normally Closed

Table 6: Warn Relay Connections

TB3 position	Relay Contact (Energized)
7	Normally Open
8	Common
9	Normally Closed

Table 7: Fault Relay Connections

NOTE: Fault relay is normally energized. Relay will change state after power up.

WARNING: Contact with PCB components should be avoided to prevent damage by static electricity. All wire connections are made to the Terminal Blocks. Relay contacts must be protected against transient and over voltage conditions (Figure 17).

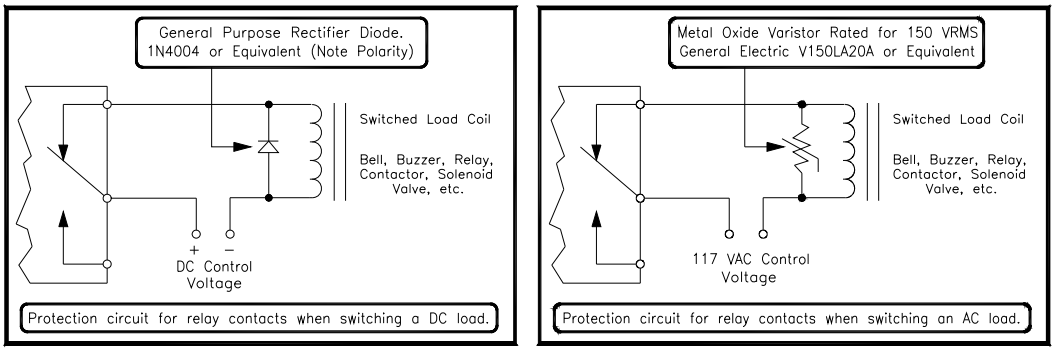

Figure 17: Relay Protection for DC and AC Loads

European Union (EU) Approved Applications: The ALARM relay contact ratings are 8 A, 30 V RMS/42.4 V peak or 8 A @ 30 VDC resistive max.

North American Approved Applications: The ALARM relay contact ratings are 8 A @ 250 VAC and 8 A @ 30 VDC resistive max.

3.5.7 European Union (EU) Approved Applications

Interconnecting cables must have an overall screen or screen and armor. Cables BS5308 Part 2, Type 2; or equivalent, are suitable. Note that the terms ‘screen’ and ‘shield’ are equivalent for the purpose of this manual. The cable armor must be terminated in a suitable cable gland, at the detector, to ensure a positive electrical connection.

3.5.8 Cable Termination in the Non-Hazardous Area

- The cable **armor** must be connected to **safety earth** in the safe area.
- The cable **screen** (drain wire) must be connected to an **instrument earth** in the safe area.
- The power supply **0V return** must be connected to an **instrument earth** in the safe area.

- The interconnecting cables should be segregated from power and other noisy cables. Avoid proximity to cables associated with radio transmitters, welders, switch mode power supplies, inverters, battery chargers, ignition systems, generators, switch gear, arc lights and other high frequency or high power switching process equipment. In general, maintain separation of at least 1 meter between instrument and other cables. Greater separations are required where long parallel cable runs are unavoidable. Avoid running instrument cable trenches close to lightning conductor earth pits.
- Complete all cable insulation testing before connecting the cable at either end.

WARNING: Under **NO** circumstances should equipment be connected or disconnected when under power. This is contrary to hazardous area regulations and may lead to serious damage to the equipment. Equipment damaged in this manner is not covered under warranty.

3.6 Maintaining the X/P Integrity

The S4000CH intelligent sensor is rated explosion-proof for use in the following hazardous locations:

- CSA/FM: Class I, Division 1, Groups B, C, D and Class I, Zone 1, IIB+H_2
- ATEX/IECEx: Class I, Zone 1, Group IIB+ H_2

Some of the factors that influence the explosion-proof integrity of the S4000CH housing are:

- Strength of the enclosure material
- Thickness of the enclosure walls
- Flame path between the housing and cover
- Flame path of threaded joints

The acceptable limits for explosion-proof housings that are used in hazardous locations are defined in CSA Standard C22.2 No.30, FM 3615, and EN/IEC 60079-1.

Anytime the cover of the S4000CH housing is removed, or the cover bolts are loosened, the flame path between the lid and the housing is affected. If power is to be left on while removing the cover or loosening the cover bolts on the S4000CH, it will be necessary to declassify the area.

When replacing the cover, the gap between the lid and the housing should be less than .0015 inch (.038 mm). Make sure that the flame-path is clear of dirt and debris before replacing the cover. This can be verified by tightening the cover bolts to a torque setting of 50 inch-pounds or by using a feeler gauge to ensure the gap between the cover and the housing is less than .0015 inch (.038 mm).

There are four entry holes, one each on the left and right sides, and two on the bottom of the S4000CH housing. These holes are dedicated for the sensor and conduit/cable. Each hole is tapped for ¾" NPT threads. If a particular entry hole is not used, it must be plugged during operation in the field. The factory installs plugs in the unused entry holes, except one. A red plastic cap is placed into this remaining hole and must be removed before conduit can be attached to the housing.

The S4000CH will have the following items placed in the four entry holes, at the factory:

- A sensor, if present (otherwise a red plastic cap)
- Two aluminum stopping plugs
- A red plastic cap

The sensor and aluminum-housing plugs have seven threads. Each of these components is screwed into the housing using five to seven turns. If any of these components must be replaced, apply five to seven turns upon replacing the component to ensure the explosion proof integrity of the device is maintained.

3.7 Start-Up Checklist

Prior to starting the system, verify the following:

- Inhibit any external devices, such as trip amplifiers, PLC's, or DCS systems.
- Verify that the optional settings are set for the desired configuration.
- Verify that the unit is properly mounted. Ensure the conduit/cable gland entries are pointed downward.
- Verify that the signal wiring is correct.
- Verify that the power supply is connected properly. The S4000CH is powered by +24 VDC (20 to 36 VDC voltage range). The detector will output a low voltage (F6) fault at 18.5 VDC or below.
- Make sure the lid is securely installed or the area has been declassified.
- Calibrate one hour after start-up.

3.8 Start-Up

Before applying power to the system for the first time, all wiring connections should be checked for correctness and the housing cover replaced. Upon first power-up the sensor may take up to fifteen minutes to stabilize.

At the initial application of power, the unit will test all of the LED segments by displaying "**88.8**". The software revision letter will then be displayed for a few seconds. The unit will then enter a fifty second Start-Up Mode. During this period, the display will read "**SU**". The unit will then enter Operational Mode, and the current gas concentration at the sensor will be displayed. For details on calibrating and gas checking the unit, see Sections 3.13 and 3.14.

3.9 Relay Reset

If the Warn and Alarm relays are configured as latching, they must be manually reset, after an alarm occurs. This can be accomplished by four different methods:

- The relays can be reset via the magnetic switch using a magnet. Place the magnet over the GM logo on the cover of the unit. After three seconds, the display will show "rSt". Remove the magnet at this time and the relays will be reset (Figure 18).

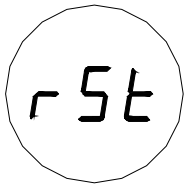

Figure 18: Relay Reset

- The relays can be reset via the Remote Reset input terminals on TB2. Connect a normally open switch between terminal TB2-7 and TB2-8. Closing the switch momentarily will reset the relays. General Monitors explosion-proof switch, P/N 30051-1, can be used for this purpose. See Section 7.6 for ordering instructions.
- The relays can be reset via the Modbus Interface (Section 6.0).
- The relays can be reset via the HART communication.

NOTE: Red LED's above and below the digital display indicate that the Alarm and Warn relays are active. Latching relays can only be reset if the gas concentration has fallen below the respective relay set point.

3.10 User Selectable Options

The S4000CH includes many selectable options to provide the user with the most flexible combustible gas detector possible. These options include Adjustable Calibration Level, Warn and Alarm Relay Set Points and Configuration, and Modbus Communications Settings. These allow the unit to operate with a wide variety of PLC and DCS Systems. The following sections explain the available options and how they can be customized. A flow diagram is included to help the user in understanding the process of reviewing and changing the available options (Figure 19).

NOTE: If the unit was ordered without relays or Modbus communications, changing relay or Modbus settings will have no effect on the operation of the unit.

3.11 Available Separate Purchase Options

Modbus

- Dual Redundant Modbus
- Single Modbus and HART

HART

- HART is a Master to Slave -One to One communication channel.

RGC

- The Remote Gas Calibrator (RGC) is an accessory that allows remote calibration. With this device, the user turns on and off the calibration gas manually.

ARGC

- The ARGC accessory is an Automatic Remote Gas Calibrator (ARGC). It is a kit with a RGC, a solenoid valve and all the required fittings from the valve to the RGC.

Remote Mounted ARGC

- The ARGC is also available in a standard GM explosion proof box. This provides terminal strips for all the connections to activate the ARGC.

3.11.1 Model S4000CH User Menu Structure

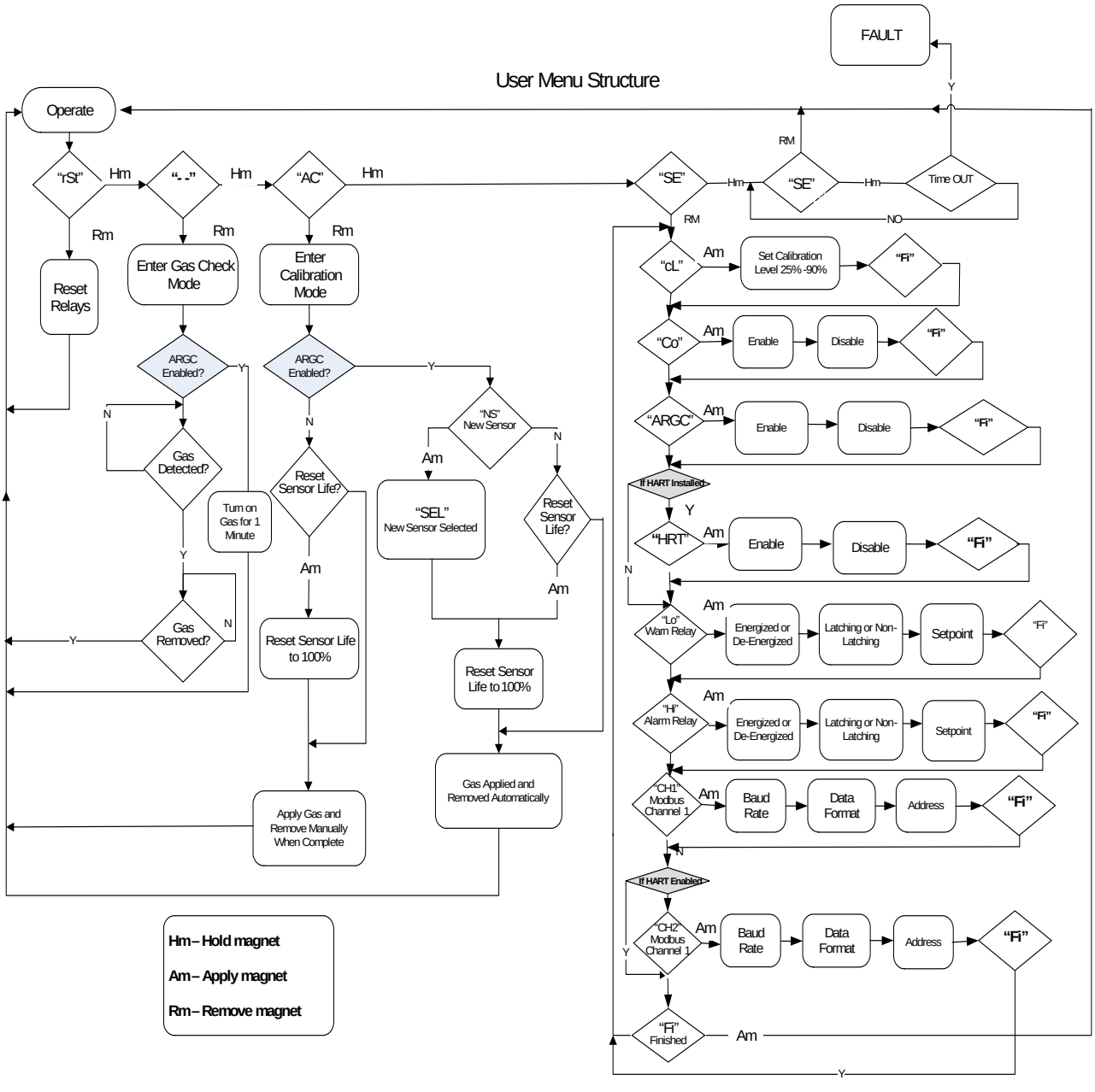

Figure 19: User Menu Structure

NOTE: "Co" represents Calibration Output. When "Co" is enabled and calibration is successful, the analog output goes from 1.5 mA to 3.2 mA for 5 seconds, settling at the desired value of 4 mA. This option is commonly used with the General Monitors HazardWatch system.

3.11.2 Calibration Level

NOTE: Refer to Section 3.14.1 for the calibration procedure.

To adjust the calibration level of the S4000CH, apply the magnet to the GM logo on the cover of the unit, until "**SE**" is displayed, then remove the magnet. This puts the unit into Setup Mode. After a few seconds "**cL**" will be displayed. Apply and remove the magnet to adjust the calibration level. The current calibration level will be displayed. To change the calibration level, apply and remove the magnet repeatedly, until the desired level is displayed. Holding the magnet in place will cause the display to advance rapidly after a few seconds. Once the desired value is displayed, wait 3 seconds and "**Fi**" will be displayed. Apply and remove the magnet to return to the next level of the Setup menu. When "**Fi**" is displayed again, apply and remove the magnet to return to normal operation. **The default calibration level is 50% LEL**.

3.11.3 Warning Relay Settings

To adjust the Warning Relay Settings of the S4000CH, apply the magnet to the GM logo on the cover of the unit until "**SE**" is displayed, then remove the magnet. This puts the unit into Setup Mode. After a few seconds "**Lo**" will be displayed. Apply and remove the magnet to change the Warning or "Low" alarm settings.

First, the Energized/De-Energized state of the relay is shown by either "**En**" or "**dE**" being displayed, respectively. Apply and remove the magnet until the desired state is displayed.

After a few seconds, the Latching/Non-Latching state of the relay is shown by either "**La**" or "**nL**". Apply and remove the magnet, until the desired state is displayed.

After a few seconds, the current Warning relay set point is displayed. Apply and remove the magnet, until the desired set point is displayed. Once the desired set point value is displayed, wait 3 seconds and "**Fi**" will be displayed. Apply and remove the magnet to return to the next level of the Setup menu. When "**Fi**" is displayed again, apply and remove the magnet, to return to normal operation.

The default Warning Relay Settings are: non-latching, de-energized, 30% LEL set point.

NOTE: The Warn relay set point cannot be set higher than the Alarm Relay set point, or higher than 60% LEL.

3.11.4 Alarm Relay Settings

To adjust the Alarm Relay Settings of the S4000CH, apply the magnet to the GM logo on the cover of the unit until "**SE**" is displayed, then remove the magnet. This puts the unit into Setup Mode. After a few seconds "**Hi**" will be displayed. Apply and remove the magnet to change the Alarm or "High" alarm settings.

First, the Energized/De-Energized state of the relay is shown by either "**En**" or "**dE**" being displayed respectively. Apply and remove the magnet, until the desired state is displayed.

After a few seconds, the Latching/Non-Latching state of the relay is shown by either "**La**" or "**nL**". Apply and remove the magnet, until the desired state is displayed.

After a few seconds, the current Alarm relay set point is displayed. Apply and remove the magnet until the desired set point is displayed. Once the desired set point value is shown, wait 3 seconds and "**Fi**" will be displayed. Apply and remove the magnet to return to the next level of the Setup menu. When "**Fi**" is displayed again, apply and remove the magnet to return to normal operation.

The default Alarm relay settings are: latching, de-energized, 60% LEL set point.

NOTE: The Alarm relay set point cannot be set lower than the Warning Relay set point, or higher than 60% LEL.

3.11.5 Modbus Channel 1 Settings

To change the Modbus Channel 1 settings of the S4000CH, apply the magnet to the GM logo on the cover of the unit until "**SE**" is displayed, then remove the magnet. This puts the unit into Setup Mode. After a few seconds "**CH1**" will be displayed. Apply and remove the magnet to change the Modbus Channel 1 settings.

First, the current Baud Rate Modbus Channel 1 is displayed. If another baud rate is to be selected, apply and remove the magnet until the desired baud rate is displayed. The choices are: 19.2k baud "**19.2**", 9600 baud "**96**", 4800 baud "**48**", or 2400 baud "**24**".

After a few seconds, the current Data Format for Modbus Channel 1 is displayed. If another data format is to be selected, apply and remove the magnet until the desired data format is displayed. The choices are: 8-N-1 "**8n1**", 8-N-2 "**8n2**", 8-E-1 "**8E1**", or 8-O-1 "**8O1**".

After a few seconds, the current address for Modbus Channel 1 is displayed. Apply and remove the magnet until the desired address is displayed. Once the desired address is displayed, wait 3 seconds and "**Fi**" will be displayed. Apply and remove the magnet to return to the next level of the Setup menu. When "**Fi**" is displayed again, apply and remove the magnet to return to normal operation. **Default settings for Channel 1 are: address 1, 19.2k baud, 8-N-1.**

NOTE: The address can be adjusted from 1 - 247. Channel 1 and Channel 2 addresses may be the same.

3.11.6 Modbus Channel 2 Settings

To change the Modbus Channel 2 Settings of the S4000CH, apply the magnet to the GM logo on the cover of the unit until "**SE**" is displayed, then remove the magnet. This puts the unit into Setup Mode. After a few seconds "**CH2**" will be displayed. Apply and remove the magnet to change the Modbus Channel 2 settings.

First, the current Baud Rate Modbus Channel 2 is displayed. If another baud rate is to be selected, apply and remove the magnet until the desired baud rate is displayed. The choices are: 19.2 kbaud "**19.2**", 9600 baud "**96**", 4800 baud "**48**", or 2400 baud "**24**".

After a few seconds, the current Data Format for Modbus Channel 2 is displayed. If another data format is to be selected, apply and remove the magnet until the desired data format is displayed. The choices are: 8-N-1 "**8n1**", 8-N-2 "**8n2**", 8-E-1 "**8E1**", or 8-O-1 "**8O1**".

After a few seconds, the current address for Modbus Channel 2 is displayed. Apply and remove the magnet until the desired address is displayed. Once the desired address is displayed, wait 3 seconds and "**Fi**" will be displayed. Apply and remove the magnet to return to the next level of the Setup menu. When "**Fi**" is displayed again, apply and remove the magnet to return to normal operation.

Default settings for Channel 2 are: address 2, 19.2k baud, 8-N-1.

3.12 HART/Modbus SELECT

This option is not shown if HART was not purchased for the S4000CH. When HART is selected via setup, the Channel 2 setup is not displayed or available. When Channel 2 is changed from HART to Modbus, the previous settings are used.

NOTE: The address can be adjusted from 1 - 247. Channel 1 and Channel 2 addresses may be the same.

3.13 Gas Check Mode

The sensor response can be checked without activating external alarms by placing the S4000CH in Gas Check Mode. In this Mode, the alarm relays are inhibited and the analog output is fixed at 1.5 mA. The display will show the gas concentration level.

3.13.1 Calibration Check

Place the magnet over the GM logo on the cover of the S4000CH. Remove the magnet when a flashing pair of bars, "**- -**" (Figure 20) appears on the display (about ten seconds). Apply the test gas to the sensor; the value of the gas concentration will be indicated by the flashing display, and should stabilize in one to two minutes.

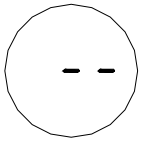

Figure 20: Calibration Check

When the reading has stabilized and the test is complete, remove the gas and the unit will return to normal operation when the concentration drops below 5% full-scale.

If the ARGC is installed and enabled, the gas will be turned on and then automatically turned off 1 minute later unless Calibration Mode is entered. Once in Calibration Mode, calibration will take control of the ARGC.

If, after the reading has stabilized, the sensor is to be calibrated, simply apply the magnet to the GM logo on the housing cover, and the unit will enter Calibration Mode.

Gas Check Mode can be aborted if gas has not been applied to the sensor. Simply reapply the magnet to the GM logo on the cover and the unit will return to normal operation.

NOTE: The test gas concentration must be at least 10% full-scale before the unit will complete the gas check sequence. If the S4000CH is placed in the Gas Check Mode and no gas is applied for six minutes, the unit will revert to a Fault (F9) condition. Re-applying the magnet over the GM logo will return the unit to normal operation. If the ARGC mode is enabled, and the S4000CH is placed in the Gas Check mode and no gas is applied for 1 ½ minutes, the unit will revert to a fault (F12) condition. Re-applying the magnet over the GM logo will return the unit to normal operation.

3.14 Calibration

General Monitors recommends that the S4000CH Intelligent Sensor be calibrated one hour after start-up, and that the calibration be checked at least every ninety (90) days to ensure system integrity. Frequent calibration checks ensure the integrity of the life protecting equipment.

The above statement is not intended to discourage the customer from checking calibration more frequently. Frequent calibration checks are recommended for environments that have problems, such as mud collecting on the sensor head, sensors accidentally being painted over, etc.

General Monitors recommends that a calibration schedule be established and followed. A logbook should also be kept, showing calibration dates and dates of sensor replacement.

3.14.1 Calibration Procedure

There are three methods for calibrating the S4000CH: Manually, with an RGC, or with an ARGC.

NOTE: If the RGC or ARGC is not installed, the S4000CH calibration is identical to the S4000C.

NOTE: If the Catalytic bead sensor is fitted with a splash guard, calibration must be performed with the splash guard in place.

WARNING: General Monitors recommends calibrating the S4000CH with 50% LEL of the gas being detected. This provides the most accurate calibration, since the S4000CH is optimized for this concentration. The accuracy of the calibration may be reduced by using a different calibration level, and this inaccuracy will increase as the calibration level varies from 50% LEL.

If it is suspected that gases are present, it will be necessary to purge the sensor environment with zero air. If zero air is not available, cover the sensor for about thirty seconds before applying the calibration gas. Zero air is air that is hydrocarbon free.

Entering Calibration Mode disables the alarm circuits by sending a 1.5 mA output signal and disabling the Warn and Alarm relays, if present. This will also prevent activation of the remote relay contacts when using a General Monitors Readout/Relay Display Module with the S4000CH.

To enter Calibration Mode, place the magnet over the GM logo on the cover of the unit (Figure 7) and hold it there until "**AC**" (Figure 21) appears on the display (about ten

seconds). The display will flash the remaining sensor life (Section 3.14.4) for about ten seconds, while the unit acquires the zero reading. Ensure that the sensor is seeing clean air during this time. Calibration mode can also be entered via remote switch. This option cannot be used when the ARGC is enabled.



Figure 21: Automatic Calibration Mode

Apply the calibration gas concentration to the sensor (usually 50% LEL of the desired gas). The display will change from "**AC**" (Automatic Calibration) to "**CP**" (Calibration in Progress), indicating that the sensor is responding to the calibration gas (Figure 22).

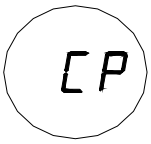

Figure 22: Calibration in Progress Mode

After one or two minutes, the display will change from "**CP**" to "**CC**" (Figure 23), indicating that the calibration is complete.

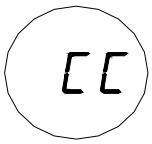

Figure 23: Calibration Complete Mode

Remove the gas and wait for the unit to return to normal operation. The display will indicate a few percent full-scale and then drop to "**0**".

The unit is now calibrated and the new ZERO and SPAN values have been stored in the non-volatile memory (EEPROM).

NOTE: The sensor life figure displayed is that calculated on completion of the last calibration. To determine the current sensor life, calibrate unit and then repeat steps 1 and 2.

3.14.2 Aborting Calibration

If calibration is to be aborted, and gas has not been applied, wait ninety seconds and reapply the magnet. The unit will return to normal operation with the previous calibration values unchanged.

NOTE: Once gas has been applied, it is not possible to abort a calibration.

If the S4000CH is placed in the Calibration Mode and no gas is applied for six minutes, the unit will revert to a Fault condition. Re-applying the magnet over the GM logo will return the unit to operational mode with the previous calibration values unchanged.

3.14.3 Adjustable Calibration Level

The S4000CH provides the user with the ability to adjust the calibration level from 25% LEL to 90% LEL. The default value from the factory is 50% LEL. This allows the user to utilize gas already available at their installation, or to perform cross-calibration to a similar gas. Adjusting the Calibration Level is performed in Setup Mode.

NOTE: %LEL to %Volume fraction is converted by using NFPA 325 Guide to Fire Hazard Properties of Flammable Liquids, Gases, and Volatile Solids. For example, 100% LEL CH_4 is shown in NFPA to be 5% Volume, Calibration is at 50% LEL or 2.5% Volume.

3.14.4 Remaining Sensor Life

The S4000CH Intelligent Sensor provides an estimate of remaining sensor life, in percent remaining, to provide the user with an early warning of the need for sensor replacement. The remaining sensor life is updated each time the unit is calibrated. The current remaining sensor life estimate is displayed during the zeroing portion of a calibration sequence. It can also be read via the Modbus and HART interface (Section 6.8.22).

NOTE: Remaining sensor life is an estimate of sensor degradation derived from sensor sensitivity. Because sensor sensitivity is affected by factors other than the natural sensor degradation, users must establish their own reference by resetting sensor life whenever these factors are at play. Some examples of these factors are new sensor installations, sensor replacement, change of the target gas, and changes in the access of gas to the sensor (produced by the TGA, RGC, or splash guard). If sensor life is not reset, the remaining sensor life indicator will no longer reflect the true state of the sensor.

3.14.5 Initializing the Remaining Sensor Life

The remaining sensor life estimate must be initialized each time a new hydrocarbon sensor is installed. The initialization should be done during the first calibration of a newly installed sensor. After the sensor has been on power for a minimum of one hour, enter calibration mode as described in Section 3.14.1. While the display is flashing the remaining sensor life estimate during zeroing, apply the magnet to the GM logo on the cover. The flashing number will change to "**100**", indicating the sensor has 100% of remaining sensor life. Complete the calibration per Section 3.14.1.

3.15 Calibration Equipment

3.15.1 Portable Purge Calibrator

The portable purge calibrator is a compact, accurate and safe system containing a non-explosive gas concentration. The lecture bottle is filled with a standard 50% LEL mixture of gas/air. Using a known gas/air mixture reduces the likelihood of error in field calibration. The hose and cup adapter allow for quick calibrations and gas checks. Pre-mixed

calibration gases at 50% LEL are available in lecture bottles at 1200 psia, 8.3 MPa maximum pressure.

Hydrogen	H_2
Methane	CH_4
Propane	C_3H_8

Please specify the gas upon ordering. Spare bottles containing these gases may be ordered. Methane and hydrogen lecture bottles may be returned to General Monitors for refilling.

3.16 Remote Gas Calibrator

The S4000CH has optional accessories called the Remote Gas Calibrator (RGC) and the High Temperature RGC (RGC-HT). They are designed for remote or difficult to access locations. They cover the sensor and allow a controlled flow of gas to it. This allows calibration in high wind conditions and can be permanently attached to the sensor. Since it is permanently attached, it is useful for remote locations. The calibrators use a constant pressure. For calibration using the RGC or the High Temperature RGC, refer to Section 3.14.1.



Figure 24: Remote Gas Calibrator (RGC, P/N 80153-1)

3.17 ARGC Gas Control

The S4000CH has a Modbus or HART controlled output that can be used to turn the cal gas on and off remotely if the proper plumbing is provided.



Figure 25: ARGC Gas Control (P/N 80154-1)

3.18 Automatic Remote Gas Calibrator (ARGC)

The S4000CH has an optional Automatic Remote Gas Calibrator. *The ARGC is a combination of the above P/N's for local remote calibration (Figure 8). The ARGC can be remotely installed using the above P/N's and P/N 32547-1 (Remote Junction Box, Figure 9).* The ARGC is intended for remote, unmanned sites, or hard to reach gas sensors. It can be used for either Calibration Mode or Gas Check Mode. This system has a user supplied permanent tank of calibration gas. When Calibration Mode is selected, the ARGC valve turns on and off at the proper time. When Gas Check Mode is selected, the gas is turned on for 1 minute then turned off. If the gas does not arrive or leave at the appropriate time, an error will be displayed.

The sensor and the ARGC work together as a system. The ARGC will try to detect a defective valve, a bad sensor, empty gas cylinder, or stuck actuator and signal a problem by a F12 fault. When a new sensor is installed, the user should select the new sensor calibration. **In this mode, all ARGC faults are ignored.** The cause of the ARGC fault could be a dirty ARGC or poisoned sensor. If the system goes to ARGC fault the valve and sensor should be inspected. If the user calibrates again the ARGC faults will be cleared.

In poorly ventilated areas, the gas concentration at the sensor may be lower than that outside the ARGC since the meshed cylinder of the ARGC reduces airflow to the sensor. Therefore, when installing a sensor with an ARGC in a space with little air flow, it is important to adjust the warning and alarm settings to a lower level.

NOTE: The ARGC requires extra power. Connect the ARGC 24 VDC at TB2 pin 10 Refer to Table 1.

3.19 Calibration Using the ARGC

To use the ARGC the user must have previously enabled the ARGC via the display, Modbus, or HART. Once ARGC Mode is enabled it will remain enabled until disabled. To enter Calibration Mode, send the appropriate Modbus or HART command or place the magnet over the GM logo on the cover of the unit (Figure 7) and hold it there until "**AC**" (Figure 21) appears on the display (about ten seconds). The display will indicate "**NS**" (New Sensor). This is asking if a new sensor has been installed. A new sensor command can also be sent via Modbus or HART.

NOTE: If a new sensor is installed, the "NS" option must be selected.

"NS"

If a new sensor has been installed, apply the magnet, "**SEL**" appears on the display. All ARGC errors will be ignored and the sensor life will be set to 100. If the sensor has been calibrated before using the ARGC, the user does not have to apply the magnet when "**NS**" is displayed.

"100"

- The display shows the remaining sensor life for about ten seconds, while the unit acquires the zero reading. If the user wants to reset the sensor life they can apply

the magnet at this time. Ensure that the sensor is seeing clean air during this time. If the initial reading is greater than 5% LEL, an ARGC error will be indicated. This means the valve could be leaking.

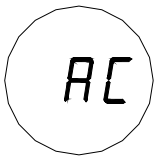

The display will change to "**AC**" and the gas will be turned on. If the gas reading is less than 60% of the calibration gas, an ARGC error will be indicated. The display will change from "**AC**" (Automatic Calibration) to "**CP**" (Calibration in Progress), indicating that the sensor is responding to the calibration gas.



After one or two minutes, the display will change from "**CP**" to "**CC**" (Figure 26) indicating that the calibration is complete. Once the valve closes and the ARGC exposes the sensor to atmosphere, the system measures the rate the gas leaves the sensor. If it is slow the valve is sticking and an ARGC error is indicated.

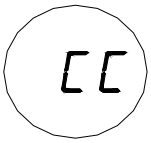

Figure 26: Calibration Complete Mode

The gas will be turned off and the unit will return to normal operation. The display will indicate a few percent full-scale and then drop to:

"0"

The unit is now calibrated and the new ZERO and SPAN values have been stored in the non-volatile memory (EEPROM).

When there are ARGC errors, the user should check the ARGC and the sensor. The user must recalibrate to remove the ARGC errors.

NOTE: Once a new sensor has been calibrated using the ARGC, a simple calibrate command from the display or HART is all that is required for future calibration.

4.0 Maintenance

4.1 General Maintenance



WARNING: Disconnect or inhibit external devices such as trip amplifiers, PLC's, or DCS systems before performing any maintenance.

European Union (EU) Approved Applications: The following grease compound is recommended for use: PBC Polybutylcuprysil, (or equivalent), which has BASEEFA Health & Safety Executive Component Approval No. 1051U for use as a jointing compound on flameproof electrical enclosures. This is available from General Monitors.

The neoprene rubber gasket, if found dry, should also be lubricated with Type P80 lubricant, available from General Monitors (P/N 610-010).

4.2 Storage

The S4000CH Intelligent Sensor should be stored in a clean, dry area, and within the temperature and humidity ranges quoted in the Appendix under Environmental Specifications. Insert red dust caps into any vacant cable entry holes.

5.0 Troubleshooting

CAUTION: Component level repair must be undertaken either by General Monitors' personnel, or by competent authorized service engineers. SMT PCB repair shall only be performed at a General Monitors facility. Failure to comply with this requirement will invalidate the warranty.

Be sure to inhibit or disconnect external alarm wiring before making any check, which might send the unit into alarm.

5.1 Fault Codes & Their Remedies

The S4000CH has self-diagnostics incorporated into the microprocessor's program. If a fault is detected, the output signal will drop to 0 mA, the fault relay will de-energize and a fault code will be displayed. The output signal will inform a remote display module that the S4000CH is in the Fault Mode. The display will indicate a fault code that can be viewed at the sensor site.

There are ten fault conditions that are monitored by the microprocessor, as follows:

5.1.1 F2 Failed to Complete Calibration

This fault will occur if the unit is placed in the calibration mode and no gas has been applied within six minutes, or if gas has been left on for more than six minutes.

ACTION – Remove gas, if present. Apply the magnet to the GM logo on the cover to clear the fault. Attempt to calibrate.

5.1.2 F3 Flash Checksum Error

This fault indicates that the contents of the S4000CH's program memory have changed. This usually occurs when powering the unit up after a lightning strike or large voltage transient on the power or signal lines to the unit.

ACTION - The unit must be returned to the factory or authorized service center for repair.

5.1.3 F4 Sensor Error

This fault indicates that either one of the remote sensor leads is open or shorted, or that the sensor has drifted greater than –10%. The S4000CH has an additional protection feature. If any of the sensor wires are shorted to ground, the sensor power will be turned off. After 1 minute the power will be turned back on. If the short is still present, power will quickly be turned off.

ACTION - Check the integrity of all sensor connections, and ensure that the cable from the S4000CH to the remote sensor is not damaged. If all sensor leads are connected properly, attempt to re-calibrate the unit. If calibration fails, replace the sensor and re-calibrate.

NOTE: Anytime a sensor is replaced, the unit should be disconnected from all alarms, as the unit may go upscale upon power-up.

5.1.4 F5 Unused

5.1.5 F6 Low Supply Voltage

This fault occurs if the supply voltage at the S4000CH drops below +18.5 VDC.

ACTION - Ensure that the supply voltage is at least +20 VDC at the S4000CH.

5.1.6 F7 EEPROM Error

In the event of an EEPROM error, the user must recycle the power to potentially clear the error. After power reset, the following may occur:

1) Unit returns to normal.
   a. This indicates the EEPROM writing did not keep up to changing events or the write cycle is too fast.
2) Unit goes to F2. The user must recalibrate after 1-2 minute sensor warm up.
   a. This means the non-critical part of the EEPROM was corrupted.
   b. This is probably caused by an event-logging problem.
   c. There is a possibility any of the following may be corrupted.
      i. Event logging data
      ii. Modbus settings
      iii. HART settings
      iv. Calibration information
      v. ARGC setup
3) Unit returns to F7
   a. This is a critical error. This fault occurs when an attempt to verify the setup/calibration parameters just written to the EEPROM memory fails.

ACTION - The unit must be returned to the factory or authorized service center for repair.

5.1.7 F8 Failure to Complete Setup

This fault occurs if the unit is left in setup mode for more than 6 minutes.

ACTION - Exit setup mode. Enter setup mode again if it is necessary to change any user selectable options.

5.1.8 F9 Gas Check Period Exceeded

If the S4000CH is left in the Gas Check Mode for more than six minutes or if test gas is left on the gas check mode for more than 6 minutes, this fault will occur.

ACTION - Place the magnet over the GM logo on the cover to return the unit to normal operation.

5.1.9 F10 Switch Error

This fault occurs if the “remote reset”, “remote calibrate”, or the magnetic switch is closed for more than two minutes.

NOTE: If the ARGC is enabled, the grounded calibration switch does not go to fault.

ACTION: Check the wiring on the remote reset and remote calibrate switches. Once the

short circuit is cleared, the unit will return to normal operation. If the magnetic switch is shorted, the unit must be returned to the factory or authorized service center for service.

5.1.10 F11 Internal Error

ACTION – An internal error has occurred. The unit must be returned to the factory for service. The possible errors are internal voltages are not at their proper values.

5.1.11 F12 ARGC fault

This error can only occur if the ARGC is enabled. This error implies something is wrong with the ARGC system (plunger stuck open or closed) or the sensor is poisoned.

ACTION - The sensor and ARGC should be inspected. Recalibration removes the errors. If recalibration does not remove the F12 error, the operator must inspect the ARGC and make sure the gas tank is not empty, the gas line is not leaking, and the regulator is at the proper setting. You can then apply the magnet over the display to clear the F12 error.

5.2 General Monitors' Offices

Area	Phone/Fax/Email
UNITED STATES Corporate Office: 26776 Simpatica Circle Lake Forest, CA 92630	Toll Free: +1-800-446-4872 Phone: +1-949-581-4464 Fax: +1-949-581-1151 Email: info@generalmonitors.com
9776 Whithorn Drive Houston, TX 77095	Phone: +1-281-855-6000 Fax: +1-281-855-3290 Email: gmhou@generalmonitors.com
UNITED KINGDOM Heather Close Lyme Green Business Park Macclesfield, Cheshire, United Kingdom, SK11 0LR	Phone: +44-1625-619-583 Fax: +44-1625-619-098 Email: info@generalmonitors.co.uk
IRELAND Ballybrit Business Park Galway Republic of Ireland	Phone: +353-91-751175 Fax: +353-91-751317 Email: info@gmil.ie
SINGAPORE No. 2 Kallang Pudding Rd. #09-16 Mactech Building Singapore 349307	Phone: +65-6-748-3488 Fax: +65-6-748-1911 Email: genmon@gmpacifica.com.sg
MIDDLE EAST P.O. Box 61209 Jebel Ali, Dubai United Arab Emirates	Phone: +971-4-8143814 Fax: +971-4-8857587 Email: gmme@generalmonitors.ae

Table 8: GM Locations

6.0 Modbus Interface

6.1 Baud Rate

The Baud Rate is selectable via the Modbus Communications Interface. The selectable baud rates are 19200, 9600, 4800, or 2400 bits per second.

6.2 Data Format

The Data Format is selectable via the Modbus Communications Interface. The selectable data formats are as follows:

Data Bits	Parity	Stop Bit	Format
8	None	1	8-N-13
8	Even	1	8-E-1
8	Odd	1	8-O-1
8	None	2	8-N-2

Table 9: Data Format

6.3 Modbus Read Status Protocol (Query/Response)

6.3.1 Modbus Read Query Message

Byte	Modbus	Range	Referenced to S4000CH
1st	Slave Address	1-247* (Decimal)	S4000CH ID (Address)
2nd	Function Code	03	Read Holding Registers
3rd	Starting Address Hi**	00	Not Used by S4000CH
4th	Starting Address Lo**	00-FF (Hex)	S4000CH Commands
5th	No. of Registers Hi	00	Not Used by S4000CH
6th	No. of Registers Lo	01	No. of 16 Bit Registers
7th	CRC Lo	00-FF (Hex)	CRC Lo Byte
8th	CRC Hi	00-FF (Hex)	CRC Hi Byte

***NOTE:** Address 0 is reserved for broadcast mode and will not be supported at this time.

****NOTE:** Start Address can be a maximum of 9999 Address Locations (0000-270E).

6.3.2 Modbus Read Response Message

Byte	Modbus	Range	Referenced to S4000CH
1st	Slave Address	1-247* (Decimal)	S4000CH ID (Address)
2nd	Function Code	03	Read Holding Registers
3rd	Byte Count	02	No. of Data Bytes
4th	Data Hi	00-FF (Hex)	S4000CH Hi Byte Status Data
5th	Data Lo	00-FF (Hex)	S4000CH Lo Byte Status Data
6th	CRC Lo	00-FF (Hex)	CRC Lo Byte
7th	CRC Hi	00-FF (Hex)	CRC Hi Byte

6.4 Modbus Write Command Protocol (Query/Response)

6.4.1 Modbus Write Query Message

Byte	Modbus	Range	Referenced to S4000CH
1st	Slave Address	1-247* (Decimal)	S4000CH ID (Address)
2nd	Function Code	06	Preset Single Register
3rd	Register Address Hi	00	Not Used by S4000CH
4th	Register Address Lo	00-FF (Hex)	S4000CH Commands
5th	Preset Data Hi	00-FF (Hex)	S4000CH Hi Byte Command Data
6th	Preset Data Lo	00-FF (Hex)	S4000CH Lo Byte Command Data
7th	CRC Lo	00-FF (Hex)	CRC Lo Byte
8th	CRC Hi	00-FF (Hex)	CRC Hi Byte

***NOTE:** Address 0 is reserved for broadcast mode and will not be supported at this time.

****NOTE:** Start Address can be a maximum of 9999 Address Locations (0000-270E)

6.4.2 Modbus Write Response Message

Byte	Modbus	Range	Referenced to S4000CH
1st	Slave Address	1-247* (Decimal)	S4000CH ID (Address)
2nd	Function Code	06	Preset Single Register
3rd	Register Address Hi	00	Not Used by S4000CH
4th	Register Address Lo	00-FF (Hex)	S4000CH Commands
5th	Preset Data Hi	00-FF (Hex)	S4000CH Hi Byte Command Data
6th	Preset Data Lo	00-FF (Hex)	S4000CH Lo Byte Command Data
7th	CRC Lo	00-FF (Hex	CRC Lo Byte
8th	CRC Hi	00-FF (Hex)	CRC Hi Byte

6.5 Function Codes Supported

- Function Code 03 (Read Holding Registers) is used to read status from the slave unit.
- Function Code 04 allows multiple registers to be read. You can use 3 or 4 for multiple reads.
- Function Code 06 (Preset Single Register) is used to write a command to the slave unit.

6.6 Exception Responses and Exception Codes

6.6.1 Exception Response

In a normal communications query and response, the master device sends a query to the S4000CH and the S4000CH receives the query without a communications error and handles the query normally within the master device's allowable timeout. The S4000CH then returns a normal response to the master. An abnormal communications query produces one of four possible events:

- If the S4000CH does not receive the query due to a communications error, then no response is returned from the S4000CH and the master device will eventually process a timeout condition for the query.
- If the S4000CH receives the query, but detects a communication error (CRC, etc.), then no response is returned from the S4000CH and the master device will eventually process a timeout condition for the query.

- If the S4000CH receives the query without a communications error, but cannot process the response to the master within the master's timeout setting, then no response is returned from the S4000CH. The master device will eventually process a timeout condition for the query. **In order to prevent this condition from occurring, the maximum response time for the S4000CH is 200 milliseconds. Therefore the master's timeout setting should be set to 200 milliseconds or greater.**

- If the S4000CH receives the query without a communications error, but cannot process it due to reading or writing to a non-existent S4000CH command register, then the S4000CH will return an exception response message informing the master of the error.

Byte	Modbus	Range	Referenced to S4000CH
1st	Slave Address	1-247* (Decimal)	S4000CH ID (Address)
2nd	Function Code	83 or 86 (Hex)	MSB is set with Function Code
3rd	Exception Code	01 - 06 (Hex)	Appropriate Exception Code (See Below)
4th	CRC Lo	00-FF (Hex)	CRC Lo Byte
5th	CRC Hi	00-FF (Hex)	CRC Hi Byte

The exception response message (ref. No. 4 above) has two fields that differentiate it from a normal response:

6.6.2 Exception Code

Exception Code Field: In a normal response, the S4000CH returns data and status in the data field, which was requested in the query from the master. In an exception response, the S4000CH returns an exception code in the data field, which describes the S4000CH condition that caused the exception. Below is a list of exception codes that are supported by the S4000CH:

Code	Name	Description
01	Illegal Function	The function code received in the query is not an allowable action for the S4000CH.
02	Illegal Data Address	The data address received in the query is not an allowable address for the S4000CH.
03	Illegal Data Value	A value contained in the query data field is not an allowable value for the S4000CH.
04	Slave Device Failure	An unrecoverable error occurred while the S4000CH was attempting to perform the requested action.
05	Acknowledge	The S4000CH has accepted the request and is processing it, but a long duration of time will be required to do so. This response is returned to prevent a timeout error from occurring in the master.
06	Device Busy	The S4000CH is engaged in processing a long-duration program command. The master should retransmit the message later when the slave is free.

Table 10: Exception Codes

6.7 S4000CH Command Register Locations

Parameter	Function	Type	Scale	Access	Register Address	Master I/O Address
Analog	0-20mA Current Output	Value	16-Bit	R	0000	40001
Mode	Indicates and Controls Mode	Bit		R/W	0001	40002
Status/Error	Indicates Errors	Bit		R	0002	40003
Not Used	N/A				0003	40004
Unit Type	Identifies the S4000C in Decimal	Value	16-Bit	R	0004	40005
Software Rev	Indicates the Software Revision	ASCII	2-Char	R	0005	40006
Status Block	Returns Analog, Mode, Status, Error, and Sensor Life Returns Address 6,7,8	Multi	6-bytes	R	0006	40007
Analog	Analog 2	Value		R	0006	40007
Mode	Mode	Bit		R	0006	40007
Error 2	Error 2	Bit		R	0007	40008
Error 1	Error 1	Bit		R	0007	40008
Sensor Life	Sensor Life	Value		R	0008	40009
Display	Display (LED & MSD)	Bit /ASCII		R	0009	40010
Display	Display (Mid & LSD)	ASCII		R	000A	40011
Serial Number	Upper Serial Number	Value		R	000B	40012
Serial Number	Lower Serial Number	32 Bit		R	000C	40013
Alarm Settings	Read or Change settings for the high alarm	Bit	(0-15)	R/W	000D	40014
Warn Settings	Read or change settings for the low alarm	Bit	(0-15)	R/W	000E	40015
Com1 Addr	Read or change settings for the Com1 Address	Value	8-Bit	R/W	000F	40016
Com1 Baud	Read or change settings for the Com1 Baud Rate	Bit	(0-7)	R/W	0010	40017
Com1 Data Format	Read or change settings for the Com1 Data Format	Bit	(0-7)	R/W	0011	40018
Com2 Addr	Read or change settings for the Com2 Address	Value	8-Bit	R/W	0012	40019
Com2 Baud	Read or change settings for the Com2 Baud Rate	Bit	(0-7)	R/W	0013	40020
Com2 Data Format	Read or change settings for the Com2 Data Format	Bit	(0-7)	R/W	0014	40021
Cal Level	Read or change settings for the calibration level	Value	25 - 90	R/W	0015	40022
Reset Alarms	Reset latched Alarm & Warn	Bit	(0)	W	0016	40023
Sensor Life	Remaining Sensor Life	Value	25 - 100	R/W	0017	40024
	Not Used				0018	40025
HazardWatch	Indicate Calibration Success	Value	8-bit	R/W	0019	40026
ARGC	Enable/Disable ARGC	Bit	1/0	R/W	001A	40027
Enb Cal Input	Enable/Disable Cal Input	Value	1/0	R/W	001B	40028
Sol ON/OFF	Turn on/off Gas Solenoid	Value	10, 20, 30	R/W	001C	40029

Parameter	Function	Type	Scale	Access	Register Address	Master I/O Address
HART EN/DE	Enable/Disable	Bit	1/0	R/W	001D	40030
HART Test	Transmit a constant 1 or 0 signal	Value	0,1,2	R/W	001E	40031
Ch1Total Receive Errors	Total # of Receive Errors	Value	8-Bit	R	0020	40033
Ch1Bus Activity Rate %	Bus Activity Rate in % of This Addressed Node vs. Other Addressed Nodes	Decimal		R	0021	40034
Ch1Function Code Errors	Total # of Function Code Errors	Value	8-Bit	R	0022	40035
Ch1Starting Addr Errors	Total # of Starting Address Errors	Value	8-Bit	R	0023	40036
Ch1No of Register Errors	Total # of Register Errors	Value	8-Bit	R	0024	40037
RXD CRC Errors	Total # of RXD CRC Errors	Value	16-Bit	R	0025	40038
RXD CRC Errors	Total # of RXD CRC Errors Same as 38	Value	16-Bit	R	0026	40039
Ch1 Parity Errors	Total parity errors	Value	16-Bit	R	0027	40040
Ch1 Overrun Errors	Total overrun errors	Value	16-Bit	R	0028	40041
Ch1 Framing Errors	Total Framing errors	Value	16-Bit	R	0029	40042
Ch1 Software Errors	Total Software request errors	Value	16-Bit	R	002A	40043
New Sensor	New Sensor Calibration	Bit	1/0	R/W	002B	40044
Clear CH1 Errors	Clear Ch1 Hardware Errors	Bit	(0)	W	002C	40045
Clear Ch1 Errors	Clear Ch 1 Software Errors	Bit	(0)	W	002D	40046
HART Current Select	Allow the current to go from full scale to 1.25 ma while in HART mode. Normal HART current is full scale to 3.5 ma.	Value	1/0	R/W	002E	40047
Not used	Internal use only				002F	40048
Event Timer	Event Set Time Hi				0030	40049
Event Timer	Event Set Time Lo				0031	40050
	See Event CHART					
	Clear Event				005F	40096
User Info	User information 1				0060	40097
User Info	User information 2				0061	40098
User info	User information 16				006F	40112
Ch2 Total Receive Errors	Total # of Receive Errors	Value	16-Bit	R	0070	40113
Ch2 Bus Activity Rate %	Bus Activity Rate in % of This Addressed Node vs. Other Addressed Nodes	Decimal		R	0071	40114

Parameter	Function	Type	Scale	Access	Register Address	Master I/O Address
Ch2 Function Code Errors	Total # of Function Code Errors	Value	16-Bit	R	0072	40115
Ch2 Starting Addr Errors	Total # of Starting Address Errors	Value	16-Bit	R	0073	40116
Ch2 No of Register Errors	Total # of Register Errors	Value	16-Bit	R	0074	40117
Ch2	CRC errors	Value	16-Bit	R	0075	40118
Ch2	CRC errors	Value	16-Bit	R	0076	40119
Ch2 Parity Errors	Total parity errors	Value	16-Bit	R	0077	40120
Ch2 Overrun Errors	Total overrun errors	Value	16-Bit	R	0078	40121
Ch2 Framing Errors	Total Framing errors	Value	16-Bit	R	0079	40122
Ch2 Software Errors	Total Ch 2 Software request errors	Value	16-Bit	R	007A	40123
	Not used					40124
Ch2 Clear Errors	Ch2 Clear Hardware errors	Bit	0	R/W	007C	40125
Ch2 Clear Errors	Ch2 Clear Software errors	Bit	0	R/W	007D	40126
	Not used				007E	40127

6.8 S4000CH Command Register Details

6.8.1 Analog (00h)

A read returns a value, which is proportional to the 0-20 mA output current. The current is based on a 16-bit value. The scaling is 0 - 65535 decimal which corresponds to 0 - 21.7 mA.

6.8.2 Mode (01h)

A read returns the present mode of the S4000CH.

A write command changes the mode to the requested mode. A data value of 08 will start calibration mode if the unit is in the run mode. It also will go from cal check to cal mode.

A write command with the data value of 04 will put the unit in Cal Check Mode if there are no errors or alarms.

Exception: Returns an Exception Code 01 (illegal function) if an illegal write is requested.

Function	Bit Position	Hex value	Access
Calibration Complete	7 MSB	80	Read
Spanning	6	40	Read
Zero Complete, Waiting for Gas	5	20	Read
Zeroing	4	10	Read
Calibration Mode	3	08	Read/Write
Calibration Check Mode	2	04	Read/Write
Run Mode	1	02	Read
Startup Mode	0 LSB	01	Read

6.8.3 Status/Error (03h)

A read returns the alarm state and errors that are occurring at the present time, which are indicated, by bit position.

Function	Bit Position	Hex value	Access
Alarm	15 MSB	0x8000	Read
Warn	14	0x4000	Read
Fault	13	0x2000	Read
Not Used	12	0x1000	Read
Not Used	11	0x0800	Read
ARGC	10	0x0400	Read
Internal error(2.5,15 Volts)	9	0x0200	Read
Switch Error	8	0x0100	Read
Setup Error	7	0x0080	Read
Calibration Check Timeout	6	0x0040	Read
EEPROM Error	5	0x0020	Read
EPROM Error	4	0x0010	Read
Sensor Error	3	0x0008	Read
Fail to Calibrate	2	0x0004	Read
Low Supply Voltage	1	0x0002	Read
Not used	0	0x0001	

6.8.4 Unit Type (04h)

A read returns the decimal value 4004. This identifies the S4000CH.

6.8.5 Software Revision (05h)

A read returns the software revision of the S4000CH in 2 ASCII characters.

6.8.6 Status Block (06h)

A read returns a 6-byte message containing the Analog (2 bytes), Mode (1 byte), Status/Error (2 bytes), and Sensor Life (1 byte) in that order. For the format of each byte, refer to the appropriate individual commands.

NOTE: These registers can be read individually or as a group. Only when the starting address is 06 is a block returned.

6.8.7 Analog Value (06h)

A value which is proportional to the 0-20 mA output current. The current is based on a 16-bit value. The scaling is 0 - 65535 decimal which corresponds to 0 - 21.7 mA.

6.8.8 Mode & Error (07h)

See Mode (02)

Calibration Complete	8000
Spanning	4000
Zero Complete, Waiting for Gas	2000
Zeroing	1000
Calibration Mode	0800
Calibration Check Mode	0400
Run Mode	0200
Startup Mode	0100
Alarm	0080
Warn	0040
Error (any error)	0020
NA	0010
NA	0008
ARGC	0004
Internal	0002
Switch	0001

6.8.9 Error & Sensor Life (08h)

6.8.9.1 Upper 8 Bits for Sensor Errors (Hexadecimal)

Setup error	80
Cal Check error	40
EEPROM Check sum error	20
Flash Check sum	10
Sensor	08
Calibration error	04
Low supply	02
NA	01

6.8.9.2 Lower 8 Bits for Sensor Life

Sensor Life	0-100%

6.8.10 Display (0x09h & 0x0Ah)

The display is also present on the Modbus. It is at address 0x09 and 0x0A. The first address (0x09) contains the LED, the decimal point location, and the Most Significant Digit (MSD). The upper word represents the LED and decimal point. They are defined as shown below. The lower word is the ASCII value for the MSD. The second address (0x0A) represents the middle digit (MID) and the Least Significant Digit (LSD) in ASCII. The upper word represents the MID and the lower word represents the LSD.

DP_LSD	0x01
DP_MID	0x02
DP_MSD	0x04
WRN_LED	0x08
ALM_LED	0x10

6.8.11 Serial Number (0Bh/0Ch)

The serial number is a 32-bit word but the value is only 23 bits long. The upper bits are always zero. This is done to keep the same serial number as the HART serial number. Address 0x0C contains the lower part of the number and address 0X0B contains the upper part.

6.8.12 Alarm Settings (0Dh)

If an alarm exists a write is not allowed and a device exception code is returned.

A read returns the present Alarm settings of the S4000CH. A write command changes the settings to the requested values. The set points are programmable in 5% FS steps.

NOTE: The maximum alarm setting for the S4000CH is 60% LEL.

A 1 in the 9th bit position means the output is Latching, a 0 means it is Non-Latching. A 1 in the 8th bit position means the output is normally Energized a 0 means it is normally De-Energized. The Alarm set point cannot be set below the Warn set point.

Factory default is 60% FS, Latching, De-Energized.

Exception: Returns an Exception Code 01 (Illegal Function) if an illegal write is requested.

Byte	Function	Bit Position	Access
High	Not Used	15 MSB	Read
	Not Used	14	Read
	Not Used	13	Read
	Not Used	12	Read
	Not Used	11	Read
	Not Used	10	Read
	Latching/Non-Latching	9	R/W
	Energized/De-Energized	8	R/W
Low	Set point	(7-0)	R/W

6.8.13 Warn Settings (0Eh)

A read returns the present Warn settings of the S4000CH. A write command changes the settings to the requested values. The set points are programmable in 5% FS steps.

NOTE: The maximum warn setting for the S4000CH is 60% LEL.

A 1 in the 9th bit position means the output is Latching, a 0 means it is Non-Latching. A 1 in the 8th bit position means the output is normally Energized, a 0 means it is normally De-Energized. The Warn set point cannot be set above the Alarm set point.

Factory default is 30% FS, non-latching, de-energized.

Exception: Returns an Exception Code 01 (Illegal Function) if an illegal write is requested.

Byte	Function	Bit Position	Access
High	Not Used	15 MSB	Read
	Not Used	14	Read
	Not Used	13	Read
	Not Used	12	Read
	Not Used	11	Read
	Not Used	10	Read
	Latching/Non-Latching	9	R/W
	Energized/De-Energized	8	R/W
Low	Set point	(7-0)	R/W

6.8.14 Com1 Address (0Fh)

A read command returns the current address for Com1. A write command changes the address to the requested value. Valid addresses are 1-247 decimal. **Factory default is 1.**

Exception: If the address is not in range, an illegal data value (03) is returned.

6.8.15 Com1 Baud Rate (10h)

A read command returns the current baud rate for Com1. A write command changes the baud rate to the requested values. Valid settings are shown in the table below. **Factory default is 19,200.**

Baud Rate	Value	Val(Hex)	Access
2400	24	18	Read/Write
4800	48	30	Read/Write
9600	96	60	Read/Write
19,200	192	C0	Read/Write

Table 11: Com1 Baud Rate

Exception: If the baud rate is not in range, an illegal data value (03) is returned.

6.8.16 Com1 Data Format (11h)

A read command returns the current data format for Com1. A write command changes the data format to the requested values. Valid settings are shown in the table below. **Default format is 8-N-1.**

Data	Parity	Stop	Format	Data(Bits 8-9)	Access
8	None	1	8-N-1	0	Read/Write
8	Even	1	8-E-1	1	Read/Write
8	Odd	1	8-O-1	2	Read/Write
8	None	2	8-N-2	3	Read/Write

Table 12: Com1 Data Format

Exception: If the data format is not in range, an illegal data value (03) is returned.

To restore all serial bus defaults:

- Hold the reset input low and turn on the power (F10 error may be displayed).
- Address factory default is 1.
- Baud rate factory default is 19,200.
- Format factory default is 8-N-1.

COM 2 is user selectable to HART or Modbus if the unit is ordered with HART. HART or Modbus is selectable via Modbus or the display. For additional information on HART, see the S4000CH HART manual.

When HART is selected there are changes to comply with the HART requirements. Since HART does not allow low current the actual current does not go below 3.5 mA. Modbus reports the analog output as if HART was not there. This allows users to use a constant program. The digital HART reports the actual current.

Function	Current Level (mA)			
	Analog Output (Standard)	Modbus	HART (Default)	HART Modified Analog Output
Start Up (SU)	4	4	4	4
Fault	0	0	3.5	1.25
HazardWatch	3.2	3.2	3.5	3.2
Cal Check	1.5	1.5	3.5	1.5
Calibrate	1.5	1.5	3.5	1.5
Gas	4-20	4-20	4-20	4-20
Over range	21.7	21.7	21.7	21.7
Negative drift (0 to -9% LEL)	2.56	2.56	3.5	2.56

Table 13: Current Chart

On HART equipped units, the user must select the HART – modified analog output in order to use analog values that are standard with gas detection equipment.

6.8.17 Com2 Address (12h)

A read command returns the current address for Com2. A write command changes the address to the requested values. Valid addresses are 1-247 decimal. **Factory default is 2.**

Exception: If the address is not in range, an illegal data value (03) is returned.

6.8.18 Com2 Baud Rate (13h)

A read command returns the current baud rate for Com2. A write command changes the baud rate to the requested values. Valid settings are shown in the table below. **Factory default is 19,200.**

Baud Rate	Value	Value(Hex)	Access
2400	24	18	Read/Write
4800	48	30	Read/Write
9600	96	60	Read/Write
19,200	192	C0	Read/Write

Table 14: Com2 Baud Rate

Exception: If the baud rate is not in range, an illegal data value (03) is returned.

6.8.19 Com2 Data Format (14h)

A read command returns the current data format for Com2. A write command changes the data format to the requested values. Valid settings are shown in the table below. **Factory default is 8-N-1.**

Data	Parity	Stop	Format	Data(Bits 9-8)	Access
8	None	1	8-N-1	0	Read/Write
8	Even	1	8-E-1	1	Read/Write
8	Odd	1	8-O-1	2	Read/Write
8	None	2	8-N-2	3	Read/Write

Table 15: Com2 Data Format

Exception: If the data format is not in range, an illegal data value (03) is returned.

To restore serial bus defaults:

- Hold the reset input low and turn on the power
- Address factory default is 2
- Baud rate factory default is 19,200.
- Format factory default is 8-N-1.

6.8.20 Calibration Level (15h)

A read returns the current settings for the calibration level. A write changes the calibration level that will be used during the next and subsequent calibrations. Valid levels are 25 to 90.

6.8.21 Reset Alarms (16h)

A write to this register with a data value of 1 will reset any latched alarms provided the current gas level is below the alarm set point.

On the S4000CH it will also reset the latching over-range function provided the gas level is below 100% LEL.

6.8.22 Sensor Life (17h)

A read returns the current estimate of remaining sensor life in percentage.

6.8.23 HazardWatch (Co – Calibration Output) (19h)

HazardWatch indicates when a successful calibration takes place. In HazardWatch mode the current goes to 3.2 mA for 5 seconds then to 4.0 mA. An aborted calibration would go straight to 4.0 mA. A read to this register will return the status of the HazardWatch option.

0x01 enables this option, 0x00 disables this option, similar to the write.

NOTE: When HART is in use, the current does not go to 3.2 mA but stays at 3.5 mA.

6.8.24 ARGC (1Ah)

The Automatic Remote Gas Calibrator is enabled or disabled by this command. A "1" enables the ARGC option and a "0" disables the option.

NOTE: When the ARGC is enabled the remote calibration input does not function.

6.8.25 PLC Remote Gas Calibration

The Enable Sol and Sol ON/OFF functions work together. Their use is to allow a PLC to turn on and off gas during a calibration or gas check. The PLC would look at the MODE register and activate or deactivate a calibration gas control valve.

6.8.25.1 Enable Sol (1Bh)

This function is a built-in safety feature. The solenoid must be enabled first before it can be activated. This disables the remote cal function and enables the solenoid.

A "0" enables the remote calibration (Normal) and disables the solenoid. A "1" disables the remote calibration and enables the solenoid.

6.8.25.2 Sol ON/OFF (1Ch)

To use this function, it must first be enabled by the Enable Sol function.

Solenoid on	10
Solenoid off	20
Return to normal	30

If the read command returns a 30, then the Sol ON/OFF function is not enabled.

NOTE: If the ARGC is enabled, the solenoid cannot be used and an exception will be returned.

6.8.26 HART Enable (1Dh)

This command enables or disables the HART. A "0" is Modbus and a "1" is HART.

6.8.27 HART Test (1Eh)

This command is used to test the HART output. It produces constant zeros or constant ones on the HART output.

Code	Results
0	Normal
1	Constant ones
2	Constant zeros

6.8.28 Abort Calibration (1Fh)

Sending a “1” will abort calibration.

6.8.29 Total Receive Errors (20h)

A read indicates the total Modbus Comm. Hardware Receive Errors that occurred in the slave device. The maximum count is 65535 and then the counter will rollover to zero and begin counting again. The total errors are an accumulation of the individual communication errors listed below.

6.8.30 Bus Activity Rate % (21h)

A read indicates the Bus Activity Rate in percent of this Slave’s addressed node versus other addressed nodes. Range of this value is in hex (0-64), which translates to decimal (0-100%).

6.8.31 Function Code Errors (22h)

A read indicates the number of Function Code Errors that occurred in the slave device. The maximum count is 65535 and then the counter will rollover to zero and begin counting again.

6.8.32 Starting Address Errors (23h)

The counter is incremented for each address that does not equal the device address. A read indicates the number of Starting Address Errors that occurred in the slave device. The maximum count is 65535 and then the counter will rollover to zero and begin counting again.

6.8.33 Number of Register Errors (24h)

A read indicates the Number of Register Errors that occurred in the slave device. The maximum count is 65535 and then the counter will rollover to zero and begin counting again.

6.8.34 RXD CRC Errors Hi (25h)

A read indicates the number of RXD CRC Errors that occurred in the slave device. The maximum count is 65535 and then the counter will rollover to zero and begin counting again.

6.8.35 RXD CRC Errors Lo (Same as Hi) (26h)

NOTE: Hi and Lo CRC errors are now reported in the same word. A read from either Hi or Lo will return the same count.

6.8.36 Parity Errors (27h)

A read indicates the number of hardware UART Parity Errors that occurred in the slave device. The maximum count is 65535 and then the counter will rollover to zero and begin counting again.

6.8.37 Overrun errors (28h)

A read indicates the number of hardware UART Overrun Errors that occurred in the slave device. The maximum count is 65535 and then the counter will rollover to zero and begin counting again.

6.8.38 Framing Errors (29h)

A read indicates the number of hardware UART Framing Errors that occurred in the slave device. The maximum count is 65535 and then the counter will rollover to zero and begin counting again.

6.8.39 Total Software CH1 Errors (2Ah)

A read indicates the number of address or data errors that occurred in the slave device. The maximum count is 65535 and then the counter will rollover to zero and begin counting again.

6.8.40 New Sensor Calibration (2Bh)

The new sensor calibration command performs a calibration only when the ARGC is enabled, otherwise it returns an exception. It also tells the ARGC function this is a new sensor and the data will be saved. Stored data may later be used to verify proper calibration.

NOTE: All new installations should perform this calibration.

6.8.41 Clear Hardware Errors (2Ch)

For clearing parity, framing and overrun errors.

6.8.42 Clear Communication Errors (2Dh)

6.8.42.1 Event Logging

Faults

- Whenever the fault word changes the time will be recorded.
- The time of the fault will be saved.
- The quantity of faults will be saved in a counter.
- When the fault is removed, it is not saved and the counter is not incremented.
- A fault event is logged for every 30 seconds recorded.
- There are a total of 10 event time stamps stored.

Warning

The time the gas level reaches the Warning level is recorded. Each time this happens a counter is incremented. The end of the event is when the gas goes below 5%. The counter is also saved. There are a total of 10 event time stamps stored.

Alarm

The time the gas level reaches the Alarm level is recorded. Each time this happens a counter is incremented. The end of the event is when the gas goes below 5%. The counter is also saved. There are a total of 10 event time stamps stored.

Calibration

The time a successful zero and calibration occurs is saved in the event log. A counter is incremented for each successful calibration. If the unit fails Zero or Cal the event is not recorded. If the calibration is aborted the event is also not recorded. Note the Zero and Calibration are one operation in the S4000CH. There are a total of 10 event time stamps stored.

Maintenance

The time a Check Calibration occurs is saved in the maintenance event log. Each successful calibration increments the maintenance counter. There are a total of 10 event time stamps stored.

Setting Clock

Please see table below.

Event Logging Registry Table

Address (hex)	Parameter	Function	Data Type	Data range	Access
30	Seconds Time Hi	Seconds Time Hi	Numeric value	0 – 65535	**Timer Sec**
31	Seconds Time Low	Seconds Time	Numeric value	0 – 65535	**Timer sec**
32	Real Time Clock Year, Month	Read/Set year and month of RTC	2 Numeric Values	0-99 year, 1 – 12 month	**Timer Struct**
33	Real Time Clock Day, Hour	Read/Set day and hour of RTC	2 Numeric Values	1 – 31 day, 0 – 23 hour	
34	Real Time Clock Minute, Second	Read/Set minutes and seconds of RTC	2 Numeric Values	0 – 59 minute, 0 – 59 second	**Timer Struct**
35	PowerCycleFlag	Read Power Cycle Flag.	Numeric Value	1 – Time Not Reset; 0 – Time Was Reset	**Flag**
36	Event Index	Event index of Logged Event	Numeric value	0 - 9	**Index**
37	Warn Seconds Time Hi	Seconds Time Hi for warning event log entries	Numeric value	0 – 65535	**Warn**
38	Seconds Time Low	Seconds Time Low for warning event log entries	Numeric value	0 – 65535	**Warn**
39	Structure time Hi	Hi byte – year, low byte – month for warning event log entries	Numeric value	0 – 65535	**Warn**

Address (hex)	Parameter	Function	Data Type	Data range	Access
3A	Structure time Mid	Hi byte – day, low byte – hour warning event log entries	Numeric value	0 – 65535	**Warn**
3B	Structure time Low	Hi byte – min, low byte – sec for warning event log entries	Numeric value	0 – 65535	**Warn**
3C	Reserved	Reserved	Numeric value	0	
3D	Reserved	Reserved	Numeric value	0	
3E	Warn Event Count	Warning Event Count	Numeric value	0 – 65535	**Warn**
3F	Alarm Seconds Time Hi	Seconds Time Hi for alarm event log entries	Numeric value	0 – 65535	**Alarm**
40	Seconds Time Low	Seconds Time Low for alarm event log entries	Numeric value	0 – 65535	**Alarm**
41	Structure time Hi	Hi byte – year, low byte – month for alarm event log entries	Numeric value	0 – 65535	**Alarm**
42	Structure time Mid	Hi byte – day, low byte – hour alarm event log entries	Numeric value	0 – 65535	**Alarm**
43	Structure time Low	Hi byte – min, low byte – sec for alarm event log entries	Numeric value	0 – 65535	**Alarm**
44	Reserved	Reserved	Numeric value	0	
45	Reserved	Reserved	Numeric value	0	
46	Alarm Event Count	Alarm Event Count	Numeric value	0 – 65535	**Alarm**
47	Fault Seconds time Hi	Seconds Time Hi for fault event log entries	Numeric value	0 – 65535	**Fault**
48	Seconds time Low	Seconds Time Low for fault event log entries	Numeric value	0 – 65535	**Fault**
49	Structure time Hi	Hi byte – year, low byte – month for fault event log entries	Numeric value	0 – 65535	**Fault**

Address (hex)	Parameter	Function	Data Type	Data range	Access
4A	Structure time Mid	Hi byte – day, low byte – hour alarm event log entries	Numeric value	0 – 65535	**Fault**
4B	Structure time Low	Hi byte – min, low byte – sec for fault event log entries	Numeric value	0 – 65535	**Fault**
4C	Fault code	Fault code. Same code as register 2	Numeric value	0 – 65535	**Fault**
4D	Reserved	Reserved	Numeric value	0	
4E	Fault Event Count	Fault Event Count	Numeric value	0 – 65535	**Fault**
4F	Maintenance Seconds time Hi	Seconds Time Hi for event log entries	Numeric value	0 – 65535	**Maintenance**
50	Seconds time Low	Seconds Time Low for event log entries	Numeric value	0 – 65535	**Maintenance**
51	Structure time Hi	Hi byte – year, low byte – month for event log entries	Numeric value	0 – 65535	**Maintenance**
52	Structure time Mid	Hi byte – day, low byte – hour event log entries	Numeric value	0 – 65535	**Maintenance**
53	Structure time Low	Hi byte – min, low byte – sec for event log entries	Numeric value	0 – 65535	**Maintenance**
54	Maintenance code	Cal check	Numeric value	0	**Maintenance**
55	Reserved	Reserved	Numeric value	0	
56	Maintenance Count	Maintenance Count	Numeric value	0 – 65535	**Maintenance**
57	Calibrate Seconds Time Hi	Seconds Time Hi for event log entries	Numeric value	0 – 65535	**Calibrate**
58	Seconds Time Low	Seconds Time Low for event log entries	Numeric value	0 – 65535	**Calibrate**
59	Structure time Hi	Hi byte – year, low byte – month for event log entries	Numeric value	0 – 65535	**Calibrate**
5A	Structure time Mid	Hi byte – day, low byte – hour event log entries	Numeric value	0 – 65535	**Calibrate**

Address (hex)	Parameter	Function	Data Type	Data range	Access
5B	Structure time Low	Hi byte – min, low byte – sec for event log entries	Numeric value	0 – 65535	**Calibrate**
5C	Calibrate code	Cal	Numeric value	0	**Calibrate**
5D	Reserved	Reserved	Numeric value	0	
5E	Calibrate Count	Calibrate Count	Numeric value	0 – 65535	**Calibrate**
5F	Reset Event Counters	Reset Event Counters	Numeric value	1	**Reset**

6.8.43 User Information (60h to 6Fh)

There is a section in memory that allows the user to store information. This is useful if the physical location or other user identification is required. The only restriction on the information is it must be Modbus compatible. Only one word can be written per command. There are a total of 16 words for the user.

6.8.44 Total Receive Errors (70h)

A read indicates the total Modbus Comm. Hardware Receive Errors that occurred in the slave device. The maximum count is 65535 and then the counter will rollover to zero and begin counting again. The total errors are an accumulation of the individual communication errors listed below.

6.8.45 Bus Activity Rate % (71h)

A read indicates the Bus Activity Rate in percent of this Slave's addressed node versus other addressed nodes. Range of this value is in hex (0-64), which translates to decimal (0-100%).

6.8.46 Function Code Errors (72h)

A read indicates the number of Function Code Errors that occurred in the slave device. The maximum count is 65535 and then the counter will rollover to zero and begin counting again.

6.8.47 Starting Address Errors (73h)

The counter is incremented for each address that does not equal the device address. A read indicates the number of Starting Address Errors that occurred in the slave device. The maximum count is 65535 and then the counter will rollover to zero and begin counting again.

6.8.48 Number of Register Errors (74h)

A read indicates the Number of Register Errors that occurred in the slave device. The maximum count is 65535 and then the counter will rollover to zero and begin counting again.

6.8.49 RXD CRC Errors Hi (75h)

A read indicates the number of RXD CRC Errors that occurred in the slave device. The maximum count is 65535 and then the counter will rollover to zero and begin counting again.

6.8.50 RXD CRC Errors Lo (Same as Hi) (76h)

NOTE: Hi and Lo CRC errors are now reported in the same word. A read from either Hi or Lo will return the same count.

6.8.51 Parity Errors (77h)

A read indicates the number of Hardware UART Parity Errors that occurred in the slave device. The maximum count is 65535 and then the counter will rollover to zero and begin counting again.

6.8.52 Overrun Errors (78h)

A read indicates the number of Hardware UART Overrun Errors that occurred in the slave device. The maximum count is 65535 and then the counter will rollover to zero and begin counting again.

6.8.53 Framing Errors (79h)

A read indicates the number of Hardware UART Framing Errors that occurred in the slave device. The maximum count is 65535 and then the counter will rollover to zero and begin counting again.

6.8.54 Total software CH1 errors (7Ah)

A read indicates the number of Address or Data Errors that occurred in the slave device. The maximum count is 65535 and then the counter will rollover to zero and begin counting again.

7.0 Appendix

7.1 Warranty

General Monitors warrants the Model S4000CH to be free from defects in workmanship or material under normal use and service within two years from the date of shipment.

General Monitors will repair or replace without charge any such equipment found to be defective during the warranty period. Full determination of the nature of, and responsibility for, defective or damaged equipment will be made by General Monitors' personnel.

Defective or damaged equipment must be shipped to the General Monitors plant, or representative from which the original shipment was made. In all cases, this warranty is limited to the cost of the equipment supplied by General Monitors. The customer will assume all liability for the misuse of this equipment by its employees, or other personnel.

All warranties are contingent upon proper use in the application for which the product was intended and do not cover products which have been modified or repaired without General Monitors' approval or which have been subjected to neglect, accident, improper installation or application, or on which the original identification marks have been removed or altered.

Except for the express warranty stated above, General Monitors disclaims all warranties with regard to the products sold, including all implied warranties of merchantability and fitness, and the express warranties stated herein are in lieu of all obligations or liabilities on the part of General Monitors for damages including, but not limited to, consequential damages arising out of, or in connection with, the performance of the product.

7.2 Principle of Operation

Many gases and vapors are combustible. General Monitors uses a low temperature catalytic bead to detect the presence of combustible gases and vapors. The catalytic bead converts the combustible materials to heat. A change in heat is then converted to a change in resistance, which can be measured.

Taking a matched pair of catalytic beads and coating one so that it does not respond to the presence of combustible gases can compare the change in resistance between the two beads. The bead that is coated is called the reference bead and the other is called the active bead. Because the beads are a matched pair, they will respond equally to changes in ambient temperature, humidity, and pressure. This makes the sensor virtually immune to changing environmental conditions.

By connecting one end of each catalytic bead together, a series circuit is formed. This circuit is supplied with a constant current. The voltage drop across each of the beads will be identical in the absence of combustible gases. As combustible material is converted to heat, the resistance of the active bead increases, causing the voltage drop across each bead to be different. This difference is proportional to the amount of combustible gas that is present.

The voltage from the sensor is amplified and fed to an Analog to Digital (A/D) converter and then made available to the microprocessor. The baseline and the gain for the amplifier are set using digital potentiometers. They are adjusted by the microprocessor during calibration.

7.3 Specifications

7.3.1 System Specifications

Sensor Type:	Continuous diffusion, low temperature catalytic bead
Sensor Life:	3 to 5 years typical
Accuracy:	±3% LEL up to 50% LEL ±5% LEL ≥ 51% LEL
Zero Drift:	Less than 5% of full scale per year
Response Time:	T50<10 sec. T90<30 sec. with 100% LEL methane applied
Measuring Ranges:	0-100% LEL
Modes:	Calibration, gas check, setup
Approvals Classification:	**CSA/FM**: Class I, Division 1, Groups B, C, D and Class I, Zone 1, IIB+H_2, T6 (Tamb=-40°C to +75°C) **ATEX/IECEx**: II 2 G Ex d IIB+H_2 T5 Gb (Tamb=-40°C to +70°C) EN 60079-29-1
Pressure Limits:	Up to 3 atmospheres, sensor requires 15 minutes from start up to stabilize
Warranty:	Two years

7.3.2 Mechanical Specifications

Length:	6.4 in (161 mm)
Height:	3.4 in (86 mm)
Width:	4.1 in (104 mm)
Weight:	5.5 lbs (2.5 kg) AL, 14.0 lbs (6.4 kg) SS
Mounting Holes:	5.0 inches (127mm) center to center
Housing:	Aluminum alloy (6061-T6 cover, A356-T6 base) or 316 stainless steel

7.3.3 Electrical Specifications

Input Voltage:	24 VDC nominal, 20 to 36 VDC 250 mA max.
Average Current (No ARGC) 24 V:	200 mA including sensor, all relays on
30 volts:	175 mA including sensor, all relays on
20 volts:	228 mA including sensor, all relays on
Current ARGC only:	.035 mA in addition to S4000CH current
Power ARGC only:	.85 Watts This is additional power required by the ARGC
Relay Ratings:	8 A @ 250 VAC/8 A @ 30 VDC resistive max. (3x) SPDT - Warning, Alarm & Fault

Analog Signal: 0-20 mA (650 Ohms max. load) All readings ±0.05 mA

Mode	HART not enabled	HART	HART modified AO
Malfunction	0 mA	3.5 mA	1.25mA
Calibration	1.5 mA	3.5 mA	1.5 mA
Gas Check	1.5 mA	3.5 mA	1.5 mA
Setup	1.5 mA	3.5 mA	1.5 mA
Startup	4.05 mA	4.05 mA	4.05 mA
Zero reading	4.05 mA	4.05 mA	4.05 mA
0-100% LEL	4-20 mA	4.0 – 20 mA	4.0 – 20 mA
Over-range	20-22 mA	20 – 21.7 mA	20 – 21.7 mA

Status Indicators: Three-digit digital display with gas concentration, Warn and Alarm LED's, calibration prompts, fault codes, and setup options.

RS-485 Output (Optional): Dual Redundant Modbus RTU, suitable for linking up to 128 units or up to 247 units with repeaters.

HART (Optional): Fully HART Compliant. User selectable between HART and Modbus. HART current source Rx = 100KΩ Cx = 2nF.

Baud Rate: 2400, 4800, 9600, or 19200 BPS

Faults Monitored: Calibration error, sensor error, low DC supply, EEPROM, EPROM, setup error, gas check time exceeded, switch error, ARGC, and internal problem.

EMC Protection: Complies with EN 50270, EN 61000-6-4

7.3.4 Cable Requirements

Cable Requirements: (w/out ARGC & with relays)

3-wire shielded cable. Max. Distance between S4000CH and power source @ 24 VDC nominal.

AWG	Ohms/1K	FEET	METERS
12*	1.588	4143	1263
14	2.525	2606	794
16	4.016	1638	499
18	6.385	1030	314
20	10.15	648	198

Table 16: 24 VDC Cable Lengths with Relays

** Screw terminals only*

Cable Requirements (w/out ARGC & w/out Relays)

3-wire shielded cable. Max. Distance between S4000CH and power source @ 24 VDC nominal.

AWG	Ohms/1K	FEET	METERS
12*	1.588	4541	1384
14	2.525	2856	871
16	4.016	1796	547
18	6.385	1129	344
20	10.15	710	217

Table 17: 24 VDC Cable Lengths w/o Relays

** Screw terminals only*

Cable Requirements: (with ARGC & with Relays)

3-wire shielded cable. Max. Distance between S4000CH and power source @ 24 VDC nominal.

AWG	Ohms/1K	FEET	METERS
12*	1.588	3661	1116
14	2.525	2303	702
16	4.016	1448	441
18	6.385	911	278
20	10.15	573	175

Table 18: ARGC Cable Lengths

** Screw terminals only*

Max. distance for analog output (650 Ohms max):

AWG	FEET	METERS
14	9000	2740
16	5200	1585
18	3800	1160
20	2400	730

Table 19: Analog Output Cable Lengths

NOTE: The analog circuit can tolerate a negative output up to -5 volts.

7.3.5 Remote Sensor Cable Lengths

The remote sensor can have up to 1.5 Ohms in each wire. The wires must be of equal length and size.

NOTE: The power wiring length is reduced by 10% due to loss in sensor wiring.

AWG	Ohm/1000 ft	Feet	Meters
12	1.588	1007	307
14	2.525	633	193
16	4.016	398	121
18	6.385	250	76
20	10.15	157	48

Table 20: Sensor Cable Lengths

European Union (EU) Approved Applications: PSU noise and ripple voltage 1.0 Vpp max. The customer supplied PSU must comply with IEC 1010-1, limiting current to 8 A under fault conditions, in order to comply with CE Marking requirements.

7.3.6 Environmental Specifications

Operating Temperature Range	CSA	FM	ATEX/IECEx
Electronics	-40°F to 167°F (-40°C to 75°C)	-40°F to 167°F (-40°C to 75°C)	-40°F to 158°F (-40°C to 70°C)
Storage Temperature Range	-58°F to 185°F (-50°C to +85°C)		
Operating Humidity Range	10% to 95% RH, non-condensing		
Atmosphere	Will not operate in <5% Oxygen. Oxygen enriched reading may be slightly higher		

7.4 Approvals

CE Marking, CSA, FM, ATEX, IECEx and GOST approved. Complies with ANSI/ISA-12.13.01-2000, CSA 22.2 No. 152 and EN 60079-29-1 performance requirements. SIL 2/3 suitable (*use in typical environments has a lower safety rating than in clean environments*). HART Registered.

HART:

- Approved by the HART Communication Foundation.
- Compatible with Emersion 375 Field Communicator.
- Listed in Emerson Process Management's Aware device list

7.5 Sensitivities to Other Gases

The S4000CH responds to the following list of hydrocarbons up to C10.

				Injection volumes		Cal Ratio	
Gases	**%LEL**	**M.W.**	**Density**	**50%lel/3L**	**50%lel/5L**	**Methane**	**Propane**
Acetylene	2.5	26.0	***	37.5 ml	62.5 ml	0.8	1.1
Ammonia	15.0	17.0	***	225.0 ml	375.0 ml	1.3	1.7
1,3- Butadiene	2.0	54.1	***	30.0 ml	50.0 ml	0.8	1.1
Butane	1.9	58.1	***	28.5 ml	47.5 ml	0.7	0.9
iso-Butane	1.8	58.1	***	27.0 ml	45.0 ml	0.6	0.8
1-Butene (Butylene)	1.6	56.1	***	24.0 ml	40.0 ml	0.7	0.9
cis-Butene-2	1.7	56.1	***	25.5 ml	42.5 ml	0.7	0.9
trans-Butene-2	1.8	56.1	***	27.0 ml	45.0 ml	0.7	0.9
iso-Butylene	1.8	56.1	***	27.0 ml	45.0 ml	0.7	0.9
Carbon Monoxide	12.5	28.0	***	187.5 ml	312.5 ml	0.9	1.2
Dimethylamine	2.8	45.1	***	42.0 ml	70.0 ml	0.6	0.8
Ethane	3.0	30.1	***	45.0 ml	75.0 ml	0.8	1.1
Ethylene Oxide	3.0	44.0	***	45.0 ml	75.0 ml	1.0	1.3
Ethylene (Ethene)	2.7	28.1	***	40.5 ml	67.5 ml	0.8	1.1
Hydrogen	4.0	2.0	***	60.0 ml	100.0 ml	0.8	1.1
Methane	5.0	16.0	***	75.0 ml	125.0 ml	1.0	1.3
Propane	2.1	44.1	***	31.5 ml	52.5 ml	0.8	1.0
Propylene (Propene)	2.0	42.1	***	30.0 ml	50.0 ml	0.8	1.0
Trimethylamine	2.0	59.1	***	30.0 ml	50.0 ml	0.6	0.8
Vinyl Chloride (Chloroethylene)	3.6	62.5	***	54.0 ml	90.0 ml	0.7	0.9
Acetaldehyde	4.0	44.1	0.8	136 µl	228 µl	0.7	0.9

				Injection volumes		Cal Ratio	
Gases	**%LEL**	**M.W.**	**Density**	**50%lel/3L**	**50%lel/5L**	**Methane**	**Propane**
Acetic Acid	4.0	60.1	1.0	140 µl	234 µl	0.5	0.7
Acetone	2.5	58.1	0.8	112 µl	187 µl	0.6	0.8
Acetic Acid	4.0	60.1	1.0	140 µl	234 µl	0.5	0.7
Acetone	2.5	58.1	0.8	112 µl	187 µl	0.6	0.8
Acetonitrile	3.0	41.1	0.8	96 µl	160 µl	0.7	0.9
Acrylonitrile	3.0	53.1	0.8	120 µl	201 µl	0.8	1.1
Amyl Acetate	1.1	130.2	0.9	100 µl	167 µl	0.3	0.4
Benzene	1.2	78.1	0.9	65 µl	109 µl	0.6	0.8
Butyl Acetate	1.7	116.2	0.9	137 µl	228 µl	0.5	0.7
Butyl Alcohol (1- Butanol)	1.4	74.1	0.8	78 µl	131 µl	0.4	0.5
sec-Butyl Alcohol (2-Butanol)	1.7	74.1	0.8	95 µl	159 µl	0.4	0.5
tert- Butyl Alcohol	2.4	74.1	0.8	138 µl	231 µl	0.7	1.0
Butyraldehyde	1.9	72.1	0.8	102 µl	171 µl	0.5	0.7
Cyclohexane	1.3	84.2	0.8	86 µl	143 µl	0.6	0.8
Diethyl Ketone (3-Pentanone)	1.6	86.1	0.8	103 µl	173 µl	0.5	0.7
p-Dioxane	2.0	88.1	1.0	104 µl	174 µl	0.5	0.6
Ethyl Acetate	2.0	88.1	0.9	119 µl	199 µl	0.6	0.8
Ethyl Amine	3.5	45.1	0.7	140 µl	234 µl	0.5	0.6
Ethyl Benzene	0.8	106.2	0.9	60 µl	100 µl	0.5	0.6
Ethyl Ether	1.9	72.2	0.7	120 µl	200 µl	0.7	0.9
Gasoline	1.4	100.2	0.8	107 µl	179 µl	0.5	0.7
Heptane	1.1	100.2	0.7	94 µl	157 µl	0.5	0.6
Hexane	1.1	86.2	0.7	86 µl	144 µl	0.5	0.6
Isopentane (2-Methylbutane)	1.4	72.2	0.6	99 µl	166 µl	0.6	0.8
Isoprene (2-Methyl-1, 3-Butadiene)	1.5	68.1	0.7	89 µl	149 µl	0.6	0.8
JP-4 (Jet fuel)	1.3	184.4	0.8	183 µl	306 µl	0.3	0.4
Methanol (Methyl Alcohol)	6.0	32.0	0.8	148 µl	248 µl	0.8	1.1
Methyl Ethyl Ketone (2-Butanone)	1.4	72.1	0.8	76 µl	128 µl	0.6	0.8
Methyl Methacrylate	1.70	100.1	0.9	111 µl	186 µl	0.6	0.7
Methyl-t-Butyl Ether(MTBE)	1.5	88.2	0.7	109 µl	182 µl	0.6	0.8
Naphtha (Petroleum Ether)	1.1	86.2	0.6	96 µl	161 µl	0.6	0.8
Octane	1.0	114.2	0.7	99 µl	166 µl	0.5	0.6
Pentane	1.5	72.2	0.6	105 µl	176 µl	0.6	0.8
2-Propanol (Isopropyl Alcohol)	2.0	60.1	0.8	93 µl	156 µl	0.6	0.8
Propanol (Propyl Alcohol)	2.2	60.1	0.8	100 µl	168 µl	0.6	0.7
Propylacetate	1.7	102.1	1.0	106 µl	177 µl	0.5	0.7
Propylamine	2.0	59.1	0.7	103 µl	172 µl	0.6	0.8
Propylene Oxide	2.3	58.1	0.8	98 µl	164 µl	0.7	1.0
Styrene (Vinyl Benzene)	0.9	104.2	0.9	63 µl	105 µl	0.5	0.6
Tetrahydrofuran	2.0	72.1	0.9	99 µl	166 µl	0.7	0.9
1,1,1-Toluene (Methylbenzene, Toluol)	1.1	101.2	0.9	78 µl	131 µl	0.5	0.7
Triethylamine	1.2	101.2	0.7	102 µl	171 µl	0.6	0.8
o-Xylene	0.9	106.2	0.9	68 µl	113 µl	0.4	0.5
p- Xylene	1.1	106.2	0.9	83 µl	139 µl	0.4	0.5
m- Xylene	1.1	106.2	0.9	83 µl	139 µl	0.4	0.5
Xylenes	1.1	106.2	0.9	83 µl	139 µl	0.4	0.5

Table 21: Chemical List

7.6 Spare Parts and Accessories

To order spare parts and/or accessories, please contact the nearest General Monitors representative, or General Monitors directly, and give the following information:

- Part Number of Spare Part or Accessory
- Description of Spare Part or Accessory
- Quantity of Spare Part or Accessory

7.6.1 Sensors

10001-1	Standard Industrial Hydrocarbon
10001-1R	Poison Resistant
10014-1	Standard Industrial Hydrocarbon High Temp
10015-1	Standard Industrial Hydrocarbon High Temp Export Version
10022-1	Standard Industrial Hydrocarbon High Temp PTB
10058-1	Standard Industrial Stainless Steel, Hydrocarbon
10058-1R	Standard Industrial Stainless Steel, Hydrocarbon, Poison Resistant
10164-1	Sensor Assembly, Hydrogen Specific
11159-1, 1L	General Purpose, SST, Sintered Steel Arrestor
11159-2, 2L	General Purpose, SST, High Temp, Sintered Steel Arrestor
10102-1	Simulator Sensor

7.6.2 Sensor Housing

10252-1	Sensor Housing
10252-3	Sensor Housing HT

7.6.3 Sensor Accessories

10041-1	Duct Mounting Plate
50061-1	Purafil Insert Assembly

7.6.4 Calibration Equipment

10543-1	3-Liter Calibration Chamber with 250µL Syringe
928-700	Dish for the 3- Liter Chamber
928-715	250µL syringe
1400150-M	Portable Purge Calibrator, Methane @ 50% LEL
1400150-H	Portable Purge Calibrator, Hydrogen @ 50% LEL
1400150-BD	Portable Purge Calibrator, Butadiene @ 50% LEL
1400150-PR	Portable Purge Calibrator, Propane @ 50% LEL
1400155-M	Replacement Cylinder, Methane @ 50% LEL
1400155-H	Replacement Cylinder, Hydrogen @ 50% LEL
1400155-BD	Replacement Cylinder, Butadiene @ 50% LEL
1400155-PR	Replacement Cylinder, Propane @ 50% LEL
80153-1	Remote Gas Calibrator (RGC)
80135-1	High Temp Remote Gas Calibrator (RGC-HT)
80154-1	Automatic Gas Calibrator (ARGC) - RGC w/Solenoid Valve
80155-1	Remote ARGC – (ARGC w/Junction Box P/N 32547-1)
32547-1	Junction Box with Connecting Board

Cylinder refills are available for Methane and Hydrogen only. Replacement cylinders must be ordered for the other gases.

922-009	Pressure Regulator Gauge
1400152-1	Small Calibration Cup
1400154	Large Calibration Cup
925-026	Tubing

7.6.5 S4000CH Replacement Parts

Check Factory for options:

32461-1,2,3,4	Control Board Electronics
32451-1,2	Output Board Electronics
32441-1	Display Board Electronics
32424-1	Enclosure Cover Assembly with Window
31195-2	Enclosure Base Assembly
30060-1	Calibration Magnet
925-5007	Cover Assy. O-Ring

7.6.6 Recommended Spare Parts for One (1) Year

30060-1	Extra Calibration Magnet (Qty. 1)

7.7 FM Approval

Factory Mutual Research Corporation
1151 Boston-Providence Turnpike
Norwood, Massachusetts 02062

Approval of the transmitter does not include, or imply, approval of apparatus to which the transmitter may be connected and which processes the electronic signal for the eventual end use. In order to maintain FMRC approved system, the control instrument, to which the subject instrument is connected, must be FMRC approved.

The following sensors have been FMRC approved for use with the Model S4000CH:

- 10001-1 Aluminum Body General Purpose Combustible Gas Sensor
- 10058-1 Stainless Steel Body General Purpose Combustible Gas Sensor

The following apparatus have been FMRC approved (although they have not been verified as part of a Model S4000CH system):

- Model DC110 Eight Channel Readout/Relay Display Module

Factory Mutual Research Corporation has tested the Model S4000CH according to the criteria listed under the FMRC Approval Standards for Combustible Gas Detectors, Class Numbers 6310 & 6320.

FMRC has tested the Model S4000CH using the specifications listed in Section 7.3. This permits an operating temperature of -40°F to +167°F (-40°C to +75°C), a general purpose sensor (10001-1 or 10058-1) attached to the housing (i.e. not remote), calibration performed with a General Monitors Portable Purge Calibrator using 50% LEL gas (Methane, Hydrogen, Butadiene, Butane, Ethane or Propane) and the procedure listed in Section 3.14. The conduit containing wires connected to the relay contacts must be sealed. If the non-latching relay option has been selected from the relay options, the user must provide alternate means of latching the relay output.



ADDENDUM
Product Disposal Considerations

This product may contain hazardous and/or toxic substances.

EU Member states shall dispose according to WEEE regulations. For further General Monitors' product WEEE disposal information please visit: www.generalmonitors.com/faqs

All other countries or states: please dispose of in accordance with existing federal, state and local environmental control regulations.



E21 Instrument Index

2303-8th Street, Nisku Alberta, T9E-7Z3 CANADA

DRAWING NO.	5B1108-02-EL-00-001	**REVISION**	AS BUILT
CUSTOMER	DEVON NEC CORPORATION	**CUSTOMER REF**	11-02-39-8-W5M
AGENT	WORLEYPARSONS	**JOB NO.**	5B1108
PROJECT	DEVON FERRIER	**QUOTATION NO.**	C-0734-C
PREPARED BY	DAVE MAY	**DATE REVISED**	02-25-2014
TYPE	GAS SEPARATOR	**DATE ISSUED**	
TAG NO.	002-PK-01-1600	**PAGE**	1

COMPRESSED CARDIUM GAS SEPARATOR

002-PK-01-1600

DEVON FERRIER
11-02-39-8-W5M

5Blue
Process Equipment Inc.

Reviewed by: _____ Date: 02-25-2014

Approved by: _____ Date: 02-25-2014

I. DESIGN CRITERIA

GAS FLOW RATE:---------- 50 MMSCF
HYDRO CARBON FLOW RATE:---------- 12.6 BBL/DAY
WATER FLOW RATE----------MINIMAL
GAS SPECIFIC GRAVITY----------.77
OIL SPECIFIC GRAVITY----------.61
WATER SPECIFIC GRAVITY----------1
OPERATING TEMPERATURE---------- 43°F
MECHANICAL DESIGN TEMPERATURE----------300°F
OPERATING PRESSURE---------- 102 PSIG
MECHANICAL DESIGN PRESSURE---------- 200 PSIG
SERVICE CONDITION----------SWEET
INSTRUMENT AIR SUPPLY ---------- YES
INSTRUMENT AIR SUPPLY PRESSURE ---------- 120 PSIG
FUEL GAS SUPPLY---------- YES
FUEL GAS SUPPLY PRESSURE---------- 102 PSIG
LIGHTING AND UTILITY POWER----------120/208/575 VAC
INSTRUMENT CONTROL POWER---------- 4-20 MAMP
INSTRUMENT POWER----------24 VDC
BUILDING HEAT---------- 60/40 EG

II. 010 SKID

S-100	(1)	STRUCTURAL STEEL SKID 14’0” WIDE X 20’0” LONG W10 X 26 MAIN MEMBERS 1/4" THICK CHECKERPLATE FLOOR CHECKERPLATE PERIMETER TO BE STITCH WELDED CHECKERPLATE SEAMS TO BE SEAL WELDED 2” HIGH DRIP LIP ON PERIMETER OF SKID 12” X 12” X 4” DEEP SUMP C/W 2” DRAIN TO SKID EDGE FOUR (4) LIFTING LUGS

III. 020 002-V-01-1610 SEPARATOR

SIZE:---------- 66" ID X 12' SM/SM VERTICAL
SERVICE CONDITION:----------SWEET
DESIGN PRESSURE: ---------- 200 PSIG
VACUUM: ---------- 15 PSIG
DESIGN TEMPERATURE:----------302 DG F.
MDMT: ---------- -50 DG F.
CORROSION ALLOWANCE:---------- 1/8"
RADIOGRAPHY (SEAMS):---------- UW-11(A) TYPE 1 (FULL)
RADIOGRAPHY (NOZZLES): ----------100%
PWHT: ---------- NONE
UT (CAT "D" WELDS):----------CATEGORY "D" WELDS
MPI:---------- LIFT LUGS
HARDNESS TESTING:----------EXEMPT

SHELLS

(1) SHELL: 66" ID X 8' X 5/8", SA-516-70N

(1) SHELL: 66" ID X 4' X 5/8", SA-516-70N

(2) HEAD: 2:1 SE 66" ID 5/8" SA-516-70N

SUPPORT

(1) SKIRT: 66" X 2'-6" SA-516-70N C/W BASE PLATE AND INSPECTION OPENINGS

NOZZLES

N1	(1)	INLET	16" 150# RF HB SA-350-LF2 CL1
N2	(1)	GAS OUT	16" 150# RF HB SA-350-LF2 CL1
N3	(1)	LIQUID OUT	4" 150# RF SCH 160 SA-350-LF2 CL1/SA-333-GR6
N4	(1)	DRAIN	2" 150# RF SCH 160 SA-350-LF2 CL1/SA-333-GR6
N5	(1)	PSV	6" 150# RFLWN SA-350-LF2 CL1
N6 A&B	(2)	LIT-1610	2" 300# RFLWN SA-350-LF2 CL1
N7 A&B	(2)	LIT-1610B	2" 300# RFLWN SA-350-LF2 CL1
N8	(1)	PG-1610D/PIT-1610C	2" 300# RFLWN SA-350-LF2 CL1
N9	(1)	TIT/TE/TW-1610A	2" 300# RFLWN SA-350-LF2 CL1
N10	(1)	TG/TW-1610B	2" 300# RFLWN SA-350-LF2 CL1
N11	(1)	SPARE	2" 300# RFLWN SA-350-LF2 CL1 C/W BLIND
N12	(2)	ANODE	4" 150# RFLWN SA-350-LF2 CL1
N13	(1)	PURGE	2" 300# RFLWN SA-350-LF2 CL1
M1	(1)	MANWAY	20" 150# RF HB SA-350-LF2 CL1 C/W BLIND AND DAVIT

INTERNALS

(1) VORTEX BREAKER: N4 2"

(1) INLET DEFLECTOR: FABRICATED, 1/4" PLATE

HIGH EFFICIENCY VANE PACK DEMISTER
PETROMESH ENHANCED DOUBLE POCKET VANE PACK
MODEL: 3V-35-24-84ID – 2-V-BANK STYLE

(1) FLOAT SHIELD: 66" X 1/4" PLATE

NDE

(1) UT TESTING ON ALL CAT D WELDS

(1) RT LONG SEAM: FULL

(1) RT LONG SEAM: FULL

(3) RT CIRC SEAM: FULL

(1) HYDRO TESTED TO 1.3 TIMES MAWP PER GS-3310 5.5.1

(1) HARDNESS TESTING

MISCELLANEOUS

(1) NAME PLATE: 5BLUE STANDARD

(2) LIFT LUG: 1" PLATE SA-516-70N

(1) ALBERTA REGISTRATION

(1) CALCULATIONS AND CRN DRAWINGS

(1) QUALITY CONTROL SHOP INSPECTION

IV. 082 INSTRUMENTS VALVES AND ACCESSORIES

VESSEL

002-TIT\TE-01-1610A (1) ROSEMOUNT 3144 TEMPERATURE TRANSMITTER C/W RTD THERMOWELL
MODEL# 3144PD1A1K6B4M5Q4
- (D1) TRANSMITTER HOUSING TYPE/CONDUIT ENTRY: FIELD MOUNT HOUSING, ALUMINUM, 1/2-14 NPT
- (A) COMMUNICATIONS PROTOCOL: 4-20 MA WITH DIGITAL SIGNAL BASED ON HART PROTOCOL
- (1) MEASUREMENT TYPE CONFIGURATION: SINGLE SENSOR INPUT
- (K6) PRODUCT CERTIFICATIONS: CSA IS, FISCO DIVISION 2 AND EXPLOSION-PROOF
- (B4) UNIVERSAL MOUNTING BRACKET FOR 2-INCH PIPE AND PANEL MOUNTING SST BRACKET AND BOLTS
- (M5) LOCAL LCD DISPLAY
- (Q4) CALIBRATION CERTIFICATE

MODEL# 0068R21C30A120F80E6
- (R) SENSOR LEAD WIRE TERMINATION: ALUM CONNECTION HEAD; SIX TERMINALS; FLAT COVER; UNPAINTED
- (21) SENSOR TYPE: SPRING-LOADED STYLE
- (C) EXTENSION TYPE MATERIAL: NIPPLE UNION SST
- (30) EXTENSION LENGTH: 3.0 " (STD)
- (A) THERMOWELL MATERIAL: TYPE 316 SST
- (120) SENSOR IMMERSION LENGTH: 12"
- (F80) FLANGE MOUNT 2" 300# RF
- (E6) CSA EXPLOSION-PROOF APPROVAL

002-TIT\TE-01-1610D (1) ROSEMOUNT 3144 TEMPERATURE TRANSMITTER C/W RTD THERMOWELL
MODEL: 3144PD1A1K6B4M5Q4
- (3144P) SMART TRANSMITTER
- (D1) DUAL COMPARTMENT ALUMINUM HOUSING
- (A) 4-20MA HART PROTOCOL
- (1) SINGLE SENSOR INPUT
- (K6) CERTIFICATIONS: CSA IS, FISCO DIV 2, XP
- (B4) UNIVERSAL MOUNTING BRACKET FOR 2" PIPE
- (M5) LOCAL LCD DISPLAY
- (Q4) CALIBRATION CERTIFICATE (3 POINT STANDARD)

MODEL: 0068R21C30A075T28E6
- (0068) THIN FILM PLATINUM RTD SENSOR
- (R) ALUMINUM CONNECTION HEAD, SIX TERMINALS, FLAT COVER, UNPAINTED
- (21) SPRING LOADED SENSOR
- (C) EXTENSION TYPE: NIPPLE UNION SST
- (30) EXTENSION LENGTH:3.0 INCHES
- (A) THERMOWELL MATERIAL: TYPE 316 SST
- (075) SENSOR IMMERSION LENGTH: 7.5"
- (T28) THREAD MOUNT 1-11.5 NPT TAPERED
- (E6) CSA EXPLOSION-PROOF APPROVAL

002-PIT-01-1610C (1) ROSEMOUNT 3051CG PRESSURE TRANSMITTER C/W 305 INLINE MANIFOLD
MODEL# 3051CG5A03A1AM5K6S5Q4
(G) MEASUREMENT TYPE: GAGE
(5) UPPER RANGE LIMIT: CD/CG; 2000 PSI
(A) TRANSMITTER OUTPUT: 4-20 MA WITH DIGITAL SIGNAL BASED ON HART PROTOCOL
(0) FLANGE TYPE FLANGE MATERIAL DRAIN/VENT FLANGE ADAPTERS: ALTERNATE FLANGE
(3) ISOLATING DIAPHRAGM: ALLOY C-276
(A) O-RING: GLASS-FILLED PTFE
(1) SENSOR FILL FLUID: SILICONE
(A) POLYURETHANE-COVERED ALUMINUM HOUSING: 1/2-14 NPT ENTRIES
(M5) LOCAL LCD DISPLAY
(K6) CSA AND ATEX EXPLOSION-PROOF, INTRINSICALLY SAFE
(S5) ASSEMBLE TO ROSEMOUNT 305 INTEGRAL MANIFOLD
(Q4) CALIBRATION CERTIFICATE

MODEL# 0305RC22B11B4
(R) MANUFACTURER: ROSEMOUNT INC
(C) MANIFOLD STYLE: COPLANAR
(2) MANIFOLD TYPE: 2-VALVE
(2) MATERIALS OF CONSTRUCTION: 316 SST
(B) PROCESS CONNECTION: 1/2-14 NPT FEMALE
(1) PACKING MATERIAL: TEFLON
(1) VALVE SEAT: INTEGRAL
(B4) SST BRACKET FOR 2-IN. PIPE MOUNT WITH SERIES 300 SST BOLTS

002-PG-01-1610D (1) 4" WIKA LIQUID FILLED GAUGE
MODEL: 233.54
RANGE: 0-500#
CASE: 4" FACE 304 SS
PROCESS: 1/2" NPT BOTTOM CONNECTION

002-LIT-01-1610 (1) ELECTRONIC LEVEL INDICATING TRANSMITTER ROSEMOUNT 5301
(GUIDED WAVE RADAR)
(LIQUID/GAS INTERFACE)
ROSEMOUNT MODEL 5301HA1S1B4AE00500CBE6M1Q4
(H) SIGNAL OUTPUT: 4-20 MA WITH HART COMMUNICATION
(A) POLYURETHANE-COVERED ALUMINUM
(1) CONDUIT / CABLE THREADS: 1/2 - 14 NPT
(S) PRESSURE: 580 PSIG @ 302 DEG F
(1) 316L SST PROBE
(B) SEALING O-RING MATERIAL: BUNA
(4A) PROBE TYPE: RIGID SINGLE LEAD
(E) PROBE LENGTH UNITS: ENGLISH
(00500) PROBE LENGTH: 5 FEET (SHOP CUT TO LENGTH)
(CB) PROCESS CONNECTION SIZE / TYPE: 4" ANSI, 300 LB
(E6) CSA EXPLOSION-PROOF
(M1) INTEGRAL DIGITAL DISPLAY
(Q4) CALIBRATION DATA CERTIFICATION

002-LIT-01-1610B (1) ELECTRONIC LEVEL INDICATING TRANSMITTER ROSEMOUNT 5301
(GUIDED WAVE RADAR)
(LIQUID/GAS INTERFACE)
ROSEMOUNT MODEL 5301HA1S1B4AE00500CBE6M1Q4
(H) SIGNAL OUTPUT: 4-20 MA WITH HART COMMUNICATION
(A) POLYURETHANE-COVERED ALUMINUM
(1) CONDUIT / CABLE THREADS: 1/2 - 14 NPT
(S) PRESSURE: 580 PSIG @ 302 DEG F
(1) 316L SST PROBE
(B) SEALING O-RING MATERIAL: BUNA
(4A) PROBE TYPE: RIGID SINGLE LEAD
(E) PROBE LENGTH UNITS: ENGLISH
(00500) PROBE LENGTH: 5 FEET (SHOP CUT TO LENGTH)
(CB) PROCESS CONNECTION SIZE / TYPE: 4" ANSI, 300 LB
(E6) CSA EXPLOSION-PROOF
(M1) INTEGRAL DIGITAL DISPLAY
(Q4) CALIBRATION DATA CERTIFICATION

002-LIT-01-1610B WILL DO LSHH/LSLL

002-LG-01-1610A (1) LEVEL GAUGE
BRAND: PENBERTHY
MODEL: 2RM9
SERVICE SWEET
MAWP: 2250 PSIG
VISIBLE GLASS 26-3/4"
C-C 30-7/8"

(1) GAUGE COCKS (PAIR): PENBERTHY 330J SWEET

002-TG-01-1610B (1) 5" FACE X 14" STEM WIKA TI.52 -40-160ºF 304 SS ADJUSTABLE ANGLE

002-TW-01-1610B (1) THERMOWELL:
PROCESS CONNECTION: 2" 300# RF
INSTRUMENT CONNECTION: 1/2"
INSERTION LENGTH (U): 12"
HEAD DESIGN: FLANGED
HEAD LENGTH: 2-1/4"
STYLE: TAPERED
MATERIAL: 316 SS

HP FLARE

002-PSV-01-1610E (1) 6" 150# RF X 8" 150# RF
BRAND: CONSOLIDATED
MODEL: 1905-30QC-2-CC-MS-31-RF-GS-HP
ORIFICE: Q ORIFICE
SET PRESSURE: 200#
SERVICE CONDITION: SWEET

GAS OUT

002-FE-01-1610 (1) 14" 300# RF CANALTA DUAL CHAMBER

SERVICE CONDITION:	NACE (SS TRIM)
X-RAY:	100%
PWHT::	YES
RUNS:	STD
AGA:	AGA 2000
OUTLETS:	(2) 1" TOL OUTS ON DOWNSTREAM
PLATE / SEAL MATERIALS:	316SS / HNBR
PLATE ORIFICE:	8.625"
GASKETS / BOLTING:	316SS / B7M STUDS C/W 2HM NUTS
FLOW CONDITIONER:	CPA 50E
FACE TO FACE:	286"

002-FIT\PI\TI-01-1610 (1) ROSEMOUNT PRESSURE TRANSMITTER
MODEL #: 3051SMV3M12G3R2A11A1AC12K6M5P1Q4Q8
3051SMV: SCALABLE MULTIVARIABLE PRESSURE TRANSMITTER

(3) PERFORMANCE CLASS: ULTRA FOR FLOW:
0.04 % READING DP ACCURACY, 200:1 RANGEDOWN,
10YEAR STABILITY,LIMITED 12YEAR WARRANTY
(M) MULTIVARIABLE TYPE: MULTIVARIABLE MEASUREMENT
WITH FULLY COMPENSATED MASS AND ENERGY FLOW
(1) MEASUREMENT TYPE: DIFFERENTIAL PRESSURE, STATIC PRESSURE
AND TEMPERATURE
(2) DIFFERENTIAL PRESSURE RANGE: -250 TO 250 INH2O
(G) STATIC PRESSURE TYPE: GAGE REFERENCE PRODUCT DATABASE TABLE
(3) STATIC PRESSURE RANGE: RANGE 3 URL:800 PSI (55.2 BAR)
(R) TEMPERATURE INPUT: RTD INPUT (TYPE PT 100, -328 TO 1562 °F (-200 TO 850 °C))
(2) ISOLATING DIAPHRAGM: 316L SST
(A11) PROCESS CONNECTION: ASSEMBLE TO 305/306 INTEGRAL MANIFOLD
(A) OUTPUT: 4-20 MA WITH DIGITAL SIGNAL BASED ON HART PROTOCOL
(1A) HOUSING STYLE: PLANTWEB HOUSING ALUMINUM 1/2-14 NPT
(C12) RTD INPUT WITH 12 FT. OF SHIELDED CABLE
(K6) CSA EXPLOSION-PROOF, DUST IGNITION-PROOF, INTRINSICALLY SAFE
(M5) PLANTWEB LCD DISPLAY
(P1) HYDROSTATIC TESTING WITH CERTIFICATE
(Q4) CALIBRATION CERTIFICATE
(Q8) MATERIAL TRACEABILITY CERTIFICATION PER EN 10204 3.1B

ROSEMOUNT 305 INTEGRAL MANIFOLD
0305RC52B11B4
(R) MANUFACTURER: ROSEMOUNT INC
(C) MANIFOLD STYLE: COPLANAR
(5) MANIFOLD TYPE: 5-VALVE
(2) MATERIALS OF CONSTRUCTION: 316 SST
(B) PROCESS CONNECTION: 1/2-14 NPT FEMALE
(1) PACKING MATERIAL: TEFLON
(1) VALVE SEAT: INTEGRAL
(B4) SST BRACKET FOR 2-IN. PIPE MOUNT WITH SERIES 300 SST BOLTS

002-TE\TW-01-1610 (1) ROSEMOUNT RTD ASSEMBLY
MODEL: 0068R21C30A080T28E6
0068: THIN FILM PLATINUM RTD SENSOR
R: ALUMINUM CONNECTION HEAD, SIX TERMINALS, FLAT COVER, UNPAINTED
21: SPRING LOADED SENSOR
C: EXTENSION TYPE: NIPPLE UNION SST
30: EXTENSION LENGTH: 3.0 INCHES
A: 316SS THERMOWELL
080: 8 INCH SENSOR IMMERSION
T28: 1" NPT TAPERED THERMOWELL
E6: CSA PRODUCT CERTIFICATION

002-TW-01-1610C (1) THERMOWELL:
PROCESS CONNECTION: 1"
INSTRUMENT CONNECTION: 1/2"
INSERTION LENGTH (U): 9"
HEAD DESIGN: HEXAGON
HEAD LENGTH: 1-3/4"
STYLE: TAPERED
MATERIAL: 316 SS

(1) WAKE FREQUENCY CALCULATION ON 002-TW-01-1610C

BLOW DOWN STATION

002-BDV-01-1610 (1) 2" 300# RF ACTUATED BALL VALVE
EL-O-MATIC MODEL ES0350.U2D04A.S27KL0 ACTUATOR
- RACK AND PINION STYLE
- PNEUMATIC SPRING RETURN, FAIL OPEN OPERATION
- SIZED FOR 80 PSI SUPPLY PRESSURE
- AIR START TORQUE OUTPUT IS 2245 IN-LB
- SPRING ENDING TORQUE OUTPUT IS 1316 IN-LB
- SPRING FAIL CCW / INLINE MOUNTING, DUAL TRAVEL STOPS
- ACTUATOR TEMPERATURE RANGE IS -40 C TO 80 C
MTG KIT FOR ELOMATIC E350
2" X 2" 300RF BALON BALL VALVE, MODEL #2F-F33-RF
- FLOATING STYLE, FULL PORT BALL VALVE
- ASTM 216 BODY, AISI 1018 NICKEL CHROME PLATED BALL
- NYLON SEATS, TFE SEALS
WESTLOCK 9479N-BY POSITION MONITOR

002-BZSC/BZSO-01-1610 (2) SPDT HERMETICALLY SEALED SWITCHES FOR OPEN/CLOSE INDICATION
- 8 POINT PREWIRED TERMINAL STRIP
- VISUAL BEACON INDICATOR
- CSA APPROVED, CLASS I, DIV I, GROUPS C & D
- SWITCHES RATED: 3AMP-125VAC / 2AMP-24VDC
- NAMUR INTERFACE MOUNTING
SST BKT FOR SWITCHPAK TO EL-O-MATIC E350

002-BYS-01-1610 (1) ASCO EF8314H301-24 24V DC
BODY: 1/4" NPT, 303 SST BODY
POWER: 24VDC

002-FO-01-1610B (1) 2" 300#, CAT502 PADDLE STYLE ORIFICE PLATE TBA BORE, T316SS

WATER OUT

002-LCV-01-1610	(1)	2" 300# RF FISHER 667-40 D BODY - WCC STEEL BODY - 1/4" TRIM - TRIM #57 17-4PH - PLUG MATERIAL: 316 SST - SEAT RING MATERIAL: 316 SST - STEM MATERIAL: S20910 - FACE TO FACE: 10.5" FISHER 667 SPRING AND DIAPHRAGM ACTUATOR - SIZE 40, FAIL CLOSED, 3/4" TRAVEL - 0 TO 33 PSIG OPERATING RANGE
002-LYI-01-1610	(1)	FISHER DVC-6200HC - 4-20 MA LOOP POWERED ELECTRONICS - QUICK REPEATABLE AUTO-CALIBRATION - REMOTE CALIBRATION AND CONFIGURATION. HH - HART HC DIAGNOSTIC TIER - SINGLE ACTING LOW BLEED RELAY - CSA EXPLOSION PROOF / INTRINSICALLY SAFE - OUTPUT SUPPLY GAUGES: 0-60 PSIG - ELASTOMERS: -40C - ALUMINUM ENCLOSURE (SUPPLIED WITH 002-LCV-01-1610)
002-LYS-01-1610	(1)	ASCO EF8314H301-24 24V DC BODY: 1/4" NPT, 303 SST BODY POWER: 24VDC (SUPPLIED WITH 002-LCV-01-1610)
002-FE\FIT-01-1610A	(1)	TURBINE METER: 2" X 1/2" EZ-IN NUFLO TOTALIZER MC-III EXP FLOW ANALYZER BODY MATERIAL: 316SS FLOW RATE: .75-7.5 USGPM (.17 - 1.7 M3/HR)
60-SP012504	(1)	2" 150# RF ALTA STRAINER Y-STRAINER NYF150 WCC STANDARD SERVICE

DRIP LEG

002-LG-01-1610B (1) LEVEL GAUGE

BRAND:	PENBERTHY
MODEL:	2RL9
SERVICE	SWEET
MAWP:	1800 PSIG
VISIBLE GLASS	26-3/4"
C-C	30-7/8"

(1) GAUGE COCKS (PAIR): PENBERTHY 330J SWEET

002-LSH-01-1610C (1) MAGNETROL 961-50A0-010 ULTRASONIC LEVEL SWITCH

(961) SINGLE-POINT ELECTRONICS
(5) INPUT POWER: 11 TO 35VDC LOOP POWERED
(0) OUTPUT SIGNAL: MA CURRENT SHIFT
(A0) HOUSING COVER: STANDARD
(0) MOUNTING: INTEGRAL
(1) APPROVALS: FM/CSA INTRINSICALLY SAFE, NON-INCENDIVE & EXPLOSION PROOF
(0) ELECTRONICS HOUSING: CAST ALUMINUM WITH ¾" CONDUIT ENTRIES

SINGLE POINT TRANSDUCER MODEL 9A1-A11A-003

(9A1) UNIT OF LENGTH: ENGLISH UNITS
(A) MATERIALS OF CONSTRUCTION: 316/316L STAINLESS
(11) PROCESS CONNECTION: 3/4" NPT
(A) OPTIONS: STANDARD DESIGN
(003) ACTUATION LENGTH: 3"

BRIDLES

002-LB-01-1610A (1) PER DRAWING #5B1108-02-DR-80-013-1 (LLSD/HHSD)

002-LB-01-1610B (1) PER DRAWING #5B1108-DR-80-014-1 (LEVEL CONTROL)

BUILDING

002-TIT-01-1600 (1) ROSEMOUNT 644 TEMPERATURE TRANSMITTER
MODEL# 644HAK6J6M5F6
(H) HEAD MOUNT - DIN A TRANSMITTER
(A) 4-20 MA OUTPUT WITH DIGITAL SIGNAL BASED ON HART PROTOCOL
(K6) CSA EXPLOSION-PROOF; INTRINSICALLY SAFE;
NON-INCENDIVE; DUST IGNITION-PROOF
(J6) ALUM ALLOY REMOTE/INTEGRAL MOUNT UNIVERSAL HD WITH 2" SST PIPE BKT
(M5) LCD DISPLAY
(F6) 60 HZ LINE VOLTAGE FILTER

ROSEMOUNT 0068 TEMPERATURE SENSOR
MODEL: 0068R21N00N060E6
(R) ALUMINUM CONNECTION HEAD, SIX TERMINALS, FLAT COVER, UNPAINTED
(21) SPRING-LOADED SENSOR
(N) EXTENSION - NONE
(00) 0.0" EXTENSION LENGTH
(N) NO THERMOWELL REQUIRED
(060) 6.0” SENSOR IMMERSION LENGTH
(E6) CSA EXPLOSION-PROOF APPROVAL

V. 082 MANUAL VALVES

BALL VALVES

324-BD0106AG	(2)	BALL VALVE: 12" 150# RF GROVE TRUNNION DB&B 9K-5012F01FO1A FP LF2 BODY / ENC TRIM LOW TEMP SOUR GEAR OPERATED
168-BN0106A1 CSO	(1)	BALL VALVE: 6" 150# 150# RF WKM FLOATING BALL B110-CS-42-CS BS FP STD BODY/STD TRIM SWEET LEVER OPERATED
168-BA0106A1	(1)	BALL VALVE: 6" 150# RF BALON FLOATING BALL 6R-F13 RP WCB BODY/STD TRIM SWEET
114-BN0106A1-CSO	(1)	BALL VALVE: 4" 150# RF BALON FLOATING BALL 4R-F13 RP WCB BODY / NICR BALL SWEET
60-BA0306A1	(1)	BALL VALVE: 2" 300# RF BALON FLOATING BALL 2R-F33-RF RP WCB BODY / NICR BALL SWEET FIRE SAFE
60-BA0106A1	(8)	BALL VALVE: 2" 150# RF BALON FLOATING BALL 2R-F13-RF RP WCB BODY / NICR BALL SWEET
60-BV0106A	(4)	BALL VALVE: 2" 150# RF GROVE TRUNNION DB&B 9K-4C02F01FO2AX004 FP CS BODY/ENC TRIM NACE PORTED RELIEF
60-BV0306A	(5)	BALL VALVE: 2" 300# RF GROVE TRUNNION DB&B 9K-4C02F03FO2AX004 FP LF2 BODY / ENC TRIM LOW TEMP NACE C/W PORTED RELIEF
33-BA8202A	(9)	BALL VALVE: 1" NPT 3000# BALON FLOATING BALL LM-10361 RP CS BODY / 316SS TRIM SWEET
27-BA8202A-CSO	(1)	BALL VALVE: 3/4" NPT 3000# BALON FLOATING BALL LM-07362 FP CS BODY / 316SS TRIM SWEET
27-BA8202A	(9)	BALL VALVE: 3/4" NPT 3000# BALON FLOATING BALL LM-07362 FP CS BODY / 316SS TRIM SWEET
21-BA8202A	(21)	BALL VALVE: 1/2" NPT 3000# BALON FLOATING BALL LM-05361 RP CS BODY / 316SS TRIM SWEET

GLOBE VALVES

60-LA0106A1	(2)	GLOBE VALVE: 2" 150# RF VELAN F-0074C-02TY SWEET WCB BODY / TRIM 8
48-LA0803A	(1)	GLOBE VALVE: 1-1/2" SW CLASS 800 VELAN W-2074B-02TY SWEET A105 BODY / TRIM 8

GATE VALVES

48-GA0832A	(2)	GATE VALVE: 1-1/2" SW X NPT CLASS 800 VELAN C-2054B-02TY STD PORT A105 BODY \ TRIM #8 SWEET
48-GA0803A	(1)	GATE VALVE: 1-1/2" SW CLASS 800 VELAN W-2054B-02TY A105 BODY \ TRIM #8 (/[USAGE]/)

CHECK VALVES

33-DB0802A	(2)	CHECK VALVE: 1" NPT CLASS 1500 ARGUS BALL CHECK NACE LF2 BODY/STAINLESS TRIM

INSTRUMENT VALVES

33X21-NB8602A	(1)	NEEDLE VALVE: 3/4" MNPT X 1/2" FNPT 6000# ANDERSON GREENWOOD M25VIS-46 316SS

BLEED RINGS

BL-601	(1)	6" 150# RF X 1-1/2" SA-516-70N 3/4" NPT BLEED CONNECTION
BL-203	(1)	2" 300# RF X 1-1/2" SA-516-70N 3/4" NPT BLEED CONNECTION

SPEC BLINDS

	(2)	SPECTACLE BLIND: SA-516-70N 16" 150#
	(1)	SPECTACLE BLIND: SA-516-70N 6" 150#
	(1)	SPECTACLE BLIND: SA-516-70N 4" 150#
	(2)	SPECTACLE BLIND: SA-516-70N 2" 300#

VI. 082 IA/FG/VENT HEADERS

LOW PRESSURE VENT HEADER

LOW PRESSURE VENT HEADER NOT REQUIRED

INSTRUMENT AIR

1" NPT INSTRUMENT AIR HEADER

002-PCV-01-1600	(1)	1/4" FISHER 67CFR REGULATOR BODY: ALUMINUM SPRING CASE MATERIAL: ALUMINUM SPRING RANGE: 0-35# SWEET C/W TAPPED BONNET
002-PG-01-1600	(1)	WINTERS PRESSURE GAUGE SUPPLIED WITH 002-PCV-01-1600
002-PCV-01-1600A	(1)	1/4" FISHER 67CFR REGULATOR BODY: ALUMINUM SPRING CASE MATERIAL: ALUMINUM SPRING RANGE: 0-125# SWEET C/W TAPPED BONNET
002-PG-01-1600A	(1)	WINTERS PRESSURE GAUGE SUPPLIED WITH 002-PCV-01-1600A

UTILITY AIR

1" NPT UTILITY AIR HEADER

VII. 084 SURFACE PREPARATION AND PAINTING

PIPE, EQUIPMENT AND TANKS

PIPE, EQUIPMENT (VESSELS), STORAGE TANKS (PER GS-6100)

-SURFACE PREPARATION:	BLAST TO SSPC-SP6
-PRIMER:	PRIMER COAT OF EPOXY PRIMER 4-6 MILS GLOVAGAUARD 8315
-TOP COAT:	ALIPHATIC URETHANE 2-4 MILS ARMOUR SHIELD 839 HIGH GLOSS COLOR: FS16376 (LIGHT GRAY)

INSULATED PIPES AND VESSELS

INSULATED PIPE OR VESSEL (PER GS-6100)

-SURFACE PREPARATION:	BLAST TO SSPC-SP10
-PRIMER:	CLOVALINE 8329 EPOXY 6-9 MILS DFT COLOR: MANUFACTURERS STANDARD

STRUCTURAL STEEL

STRUCTURAL STEEL (PER GS-6100)

-SURFACE PREPARATION:	BLAST TO SSPC-SP6
-PRIMER:	CLOVAGUARD 83150 4-6 MILS DFT
-TOP COAT:	ARMOUR SHIELD 839 HIGH GLOSS 2-4 MILS DFT ALIPHATIC URETHANE
-COLOR:	FS15090 (BLUE) / CLOVERDALE BLUE # 409

MISCELLANEOUS

-PRESSURE SAFETY VALVES:	SAFETY ORANGE FS 12246
-HANDRAILS:	SAFETY YELLOW FS 13591

-BAR GRATING & STAIR TREADS SHALL BE GALVANIZED

-NOSING OF THE STAIR TREADS TO BE PAINTED BY HIGH VISIBILITY SAFETY YELLOW

SANDBLAST AND PAINTING

VIII. 085 BUILDING

BUILDING

002-BU-01-1600 (1) BUILDING SIZE: 17 FT X 20 FT X 19.5 FT HIGH EAVE
SELF FRAMING METAL BUILDING (GABLE ROOF, 4:12 SLOPE)

ROOF EXTERIOR:	22 GA. PREPAINTED
ROOF INTERIOR:	24 GA. FLUTED ALUM WHITE
INSULATION	R-30 FIBERGLASS
VAPOUR BARRIER:	6 MILL POLY
WALL EXTERIOR:	22 GA. PREPAINTED
WALL INTERIOR:	24 GA. FLUTED ALUM WHITE
INSULATION:	R-20 FIBERGLASS
VAPOUR BARRIER:	6 MILL POLY
COLORS:	BUILDING CLADDING QC8305 STONE GREY
	TRIMS: QC8260 SLATE BLUE
	DOORS: QC8260 SLATE BLUE

COMPONENTS:
2 - 3' X 7' 16GA DOOR C/W 16GA FRAME, HGS, WS, CC, THRESHOLD, & SWEEP
2 - LOCKING PANIC HARDWARE {VON DUPRIN 44TP)
2 - SINGLE GLAZED FIXED 24" X 24" I.W.G. GLAZED WINDOW IN DOOR
2 - HYDRAULIC CLOSURE
2 - 3' CANOPY FOR A SINGLE DOOR
2 - 32" X 36" DOUBLE GLAZED SLIDE WINDOW C/W 1/2 SCREEN
35 - LINEAL FEET OF EAVES TROUGH AND DOWNSPOUTS
35 - LINEAL FEET OF ICE RAKES ATTACHED AT THE EAVE

-PROFESSIONAL ENGINEERS STAMPED DRAWING FOR THE PROVINCE OF ALBERTA
-ALL FLASHINGS, SCREWS, BOLTS, TRIMS AND CAULKING INCLUDED.

HVAC

BASED ON CLASSIFIED AREA
BASED ON 3 ACPH CONTINUOUS PLUS ADDITIONAL 9 ACPH FOR EMERGENCY
UNIT HEATER SIZED TO ALLOW FOR 3 CONTINUOUS ACPH

002-EF/EFM-01-1681 (1) 6-ACPH
RUFFNECK EFX-12A-2H XP EXHAUST FAN 575/3/60 1/2HP 850CFM T3B MOTOR TEMP
C/W BACK GUARD & GRAVITY BACK DRAFT DAMPER
CLASS I DIV 1 & 2 GROUP C&D

002-EF/EFM-01-1682 (1) 6-ACPH
RUFFNECK EFX-12A-2H XP EXHAUST FAN 575/3/60 1/2HP 850CFM T3B MOTOR TEMP
C/W BACK GUARD & GRAVITY BACK DRAFT DAMPER
CLASS I DIV 1 & 2 GROUP C&D

002-L-01-1683 (1) 24" X 24" PBX-4L6 PARALLEL BLADE DAMPER C/W FLANGE FRAME
C/W BELIMO 24VDC NFBUP-S ACTUATOR MOUNTED IN AIRSTREAM
C/W BELIMO ZS260 EXPLOSION PROOF ENCLOSURE

002-UHG/UHM-01-1680 (1) RUFFNECK GYLCOL HEATER AH-20A-A5
70KW 575/3/60 XP T3B MOTOR- 20" FAN, 5 TUBE PASSES
C/W 1.5" NPT MALE SCH 40 CONNECTION, BMK & XT312 SPDT REMOTE THERMOSTAT
CLASS 1 DIV 1 & 2 GROUPS C&D
- FLUID WEIGHT: TEG 60%/WATER 40%
- INLET TEMP: 160°C
- OUTLET TEMP: 135°C
- ALTITUDE: 1036M ASL
- OPERATING PRESSURE: 1,470KPA

-PROFESSIONAL ENGINEERS STAMPED DRAWING FOR THE PROVINCE OF ALBERTA
-ALL FLASHINGS, SCREWS, BOLTS, TRIMS AND CAULKING INCLUDED
-HVAC STAMPED CALCULATIONS INCLUDED

IX. 086 ELECTRICAL WORKS

	(1)	ELECTRICAL (002-PK-01-1600 CARDIUM GAS SEPARATOR PACKAGE)
002-JBC-01-1601	(1)	-SUPPLY AND INSTALLATION OF (1) CONTROL JUNCTION BOX (A20H1610GQRLP) C/W REQUIRED BACKPAN, TERMINALS, WIRING AND LABELING.
002-JBE-01-1602		-SUPPLY AND INSTALLATION OF (1) POWER JUNCTION BOX (A20H2010GQRLP) C/W REQUIRED BACKPAN, TERMINALS, WIRING AND LABELING.
002-JBDA-01-1605	(1)	-SUPPLY AND INSTALLATION OF (1) ANALOG/DISCRETE JUNCTION BOX (A24H2410GQRLP), C/W REQUIRED BACKPAN, TERMINALS, WIRING AND LABELING.
002-JBF-01-1609	(1)	-SUPPLY AND INSTALLATION OF (1) FIRE & GAS JUNCTION BOX (A24H2410GQRLP) C/W REQUIRED BACKPAN, TERMINALS, WIRING AND LABELING.
		-SUPPLY AND INSTALLATION OF (3) KILLARK VM4L SERIES, 120 WATT, 120VAC, INTERIOR LIGHT FIXTURES C/W REQUIRED WIRING AND LABELING.
		-SUPPLY AND INSTALLATION OF (2) CROUSE HINDS 3-WAY SWITCHES (DSD-936) C/W REQUIRED CABLE, WIRING AND LABELING.
		-SUPPLY AND INSTALLATION OF (2) KILLARK VM1L SERIES, 45 WATT, 120VAC EXTERIOR LIGHT FIXTURE C/W REQUIRED CABLE, WIRING AND LABELING.
		-SUPPLY AND INSTALLATION OF (2) LUMACELL 120VAC EMERGENCY LIGHTS (RG12HZ120), ONE MOUNTED AT EACH DOOR C/W REQUIRED CABLE, WIRING AND LABELING.
		-SUPPLY AND INSTALLATION OF (2) CROUSE HINDS RECEPTACLE (ENR21151) C/W REQUIRED CABLE, WIRING AND LABELING.

002-XA-01-1600A/1600C:	(2)	SUPPLY AND INSTALLATION OF (2) RED EMERGENCY STROBES. (FEDERAL SIGNAL 151XST-120R) C/W REQUIRED CABLE, WIRING AND LABELING.
002-XA-01-1600/1600B:	(2)	SUPPLY AND INSTALLATION OF (2) AMBER EMERGENCY STROBES. (FEDERAL SIGNAL 151XST-120A) C/W REQUIRED CABLE, WIRING AND LABELING.
002-XA-01-1600D:	(1)	SUPPLY AND INSTALLATION OF (1) HORN (FEDERAL SIGNAL 300GCX120, SIG-F MESSAGE CENTER & UTM TONE MODULE) C/W REQUIRED CABLE, WIRING AND LABELING.
002-AE/AIT-01-1600/1600B:	(2)	SUPPLY AND INSTALLATION OF (1) GENERAL MONITORS LEL GAS DETECTORS. S4000CH-1-0-01-1 C/W SC211A-1 00-ASSY C/W REQUIRED CABLE, WIRING AND LABELING.
002-AIT-01-1600A/1600C:	(2)	SUPPLY AND INSTALLATION OF (2) DETRONICS UV/IR FLAME DETECTORS C/W REQUIRED CABLE, WIRING AND LABELING. MODEL #X5200
		-SUPPLY AND INSTALLATION OF (2) THOMAS & BETTS SELF-LUMINOUS EXIT SIGN (LTEU-1)
		-CONNECTION TO (14) ANALOG END DEVICES C/W REQUIRED CABLE, WIRING AND LABELING.
		-CONNECTION TO (9) DISCRETE END DEVICES C/W REQUIRED CABLE, WIRING AND LABELING.
		-CONNECTION TO (1) AMBIENT TEMPERATURE TRANSMITTER C/W REQUIRED CABLE, WIRING AND LABELING.
002-MHS-01-1681/1682	(1)	SUPPLY AND INSTALLATION OF (1) CROUSE HINDS (EDS2173) HAND/OFF/AUTO SWITCHES FOR EXHAUST C/W REQUIRED CABLE, WIRING AND LABELING.
		SUPPLY AND INSTALL WARNING LABELS ON EXHAUST FANS HOA 1/2" HIGH WHITE LETTERS ON A RED BACKGROUND "WARNING: TURN OFF THE SWITCH ONLY IN THE EVENT OF EMERGENCY AND ALWAYS KEEP THE SWITCH INTO AUTO MODE POSITION"
002-MHS-01-1680	(1)	SUPPLY AND INSTALLATION OF (1) CROUSE HINDS (EDS2173) HAND/OFF/AUTO SWITCHES FOR HEATERS C/W REQUIRED CABLE, WIRING AND LABELING.
002-MTS-01-1680	(1)	SUPPLY AND INSTALLATION OF (1) RUFFNECK (XT-311) THERMOSTATS FOR HEATER C/W REQUIRED CABLE, WIRING AND LABELING.
		-GROUNDING OF ALL CABLE TRAY AND CONNECTED TO GROUND BUS BARS C/W FT4 RATED GROUND WIRE.
		-GROUND BUS BARS TO BE INSTALLED IN DIAGONAL CORNERS OF SKID PACKAGE.
		-ALL JUNCTION BOXES TO BE BONDED TO MAIN TRAY GROUND.
		-LOCAL AREA PERMIT IS INCLUDED.
		DRAWINGS (002-PK-01-1600 CARDIUM GAS SEPARATOR PACKAGE) -SUPPLY OF (4) JUNCTION BOX DRAWINGS C/W BOM & P. ENG. STAMP. -SUPPLY OF (1) POWER LAYOUT DRAWING C/W BOM & P. ENG. STAMP. -SUPPLY OF (1) CONTROL LAYOUT DRAWING C/W BOM & P. ENG. STAMP. -SUPPLY OF (1) CABLE TRAY LAYOUT DRAWING C/W BOM & P. ENG. STAMP. -SUPPLY OF (1) CABLE TRAY GROUNDING LAYOUT DRAWING C/W BOM & P. ENG. STAMP. -SUPPLY OF (1) LIGHTING STUDY.

-SUPPLY OF (1) CABLE SCHEDULE (INCLUDES INSTRUMENTATION) C/W P.ENG. STAMP.
-SUPPLY OF (1) ELECTRICAL LOAD LIST.
-SUPPLY OF ELECTRICAL COMPONENTS SPEC SHEETS.
-FUGITIVE EMISSIONS STUDY

X. CLIENT SPECIFICATIONS

Design Code:	Pressure Class:	Temperature (ºC):	C.A. (mm):	Service:	Primary Joints:
ASME B31.3-10	ASME 150	-29 to 200	1.5	Normal (Sweet)	RF/BW/SW

General Notes Applicable to Piping Class:	Primary Material:	Tubing Class:	Alternate NPT Class:
1, 2, 40	Killed Carbon Steel	DL74	A13

Primary Fluids/Service:
Gas & Liquid Hydrocarbons, Fuel Gas, Produced H_2O, Treated (de-aerated / filtered) Fresh H_2O, Vents and Drains, Inert Gases, Chemicals

Joint Non-Destructive Examination:		Permissible use of Alternate NPT Class:	
All Joints:	20% Visual	Prefabricated Non-Enclosed Packages/Modules:	Not Permitted
Butt Welds:	10% RT		
Socket Welds:	5% RT (Fit-up) + 10% MT	All Other Services:	See Flowchart 1
Fillet Welds:	10% MT		

PWHT:		Branch Tables per GS-5210:	
Cyclic (Press, Temp) or Vibrating Service:	BWs, SWs, and Fillets	Primary:	BCT1
All Other Services:	Per Code	Instruments, Temporary Hydrotest Vents/Drains:	BCT3

Primary Pressure / Leak Test Requirement:	Permissible Alternative Test:
Recorded Hydrotest: Min. **2,940 kPag**; Max. **3,000 kPag**	as per GS-5905 on Exception Basis Only

Pressure – Temperature Rating:

Temperature (ºC)	-29 to 38	50	100	150	200				
Max. Design Pressure (kPag)	1,960	1,920	1,770	1,580	1,380				

ITEM	NPS LGE	NPS SML	RATING	ENDS	GENERAL DESCRIPTION	NOTES
Pipe	¾ to 1 ½		S-80	PE	ASTM A106-B SMLS, ASME B36.10M	
	2		S-80	BE	ASTM A106-B SMLS, ASME B36.10M	
	3 to 24		S-Std	BE	ASTM A106-B SMLS, ASME B36.10M	
	30 to 36		S-Std	BE	ASTM A671-CB60 Class 12 DSAWL (Ej = 1.00)	
	42 to 48		S-XS	BE	ASTM A671-CB60 Class 12 DSAWL (Ej = 1.00)	
Nipples						13
Regular	½		S-160	TBE	ASTM A106-B SMLS, ASME B36.10M	17
Regular	¾ to 1 ½		S-160	POE x TOE	ASTM A106-B SMLS, ASME B36.10M	6
Regular	¾ to 1 ½		S-80	PBE	ASTM A106-B SMLS, ASME B36.10M	
Swage	¾ to 1 ½	½ to 1	S-80	PLE x TSE	ASTM A234-WPB-S, MSS SP-95	6
Swage	¾ to 1 ½	½ to 1	S-80	PBE	ASTM A234-WPB-S, MSS SP-95	
Swage	2	¾ to 1 ½	S-80	BLE x PSE	ASTM A234-WPB-S, MSS SP-95	
Swage	3	¾ to 1 ½	S-40/S-80	BLE x PSE	ASTM A234-WPB-S, MSS SP-95	
Flanges	¾ to 1 ½		Class 150	RF SW	ASTM A105N, ASME B16.5	
	1 ½ to 2		Class 150	RF WN	ASTM A105N, S-80, ASME B16.5	46
	3 to 24		Class 150	RF WN	ASTM A105N, S-Std, ASME B16.5	
	30 to 36		Class 150	RF WN	ASTM A105N, S-Std, ASME B16.47 Series A	
	42 to 48		Class 150	RF WN	ASTM A105N, S-XS, ASME B16.47 Series A	
Orifice	2		Class 300	RF WN	ASTM A105N, S-80, NPS ½ NPT Taps, ASME B16.36	
Flanges	3 to 12		Class 300	RF WN	ASTM A105N, S-Std, NPS ½ NPT Taps, ASME B16.36	
	≥ 14		-	-	*Use normal flanges and install pressure taps on pipe*	10
Blind	¾ to 24		Class 150	RF	ASTM A105N, ASME B16.5	
Flanges	30 to 48		Class 150	RF	ASTM A105N, ASME B16.47 Series A	
					Tapped blinds per ASME B16.5-09 Table 6	

ITEM	NPS LGE	NPS SML	RATING	ENDS	GENERAL DESCRIPTION	NOTES
Blanks	¾ to 12		Class 150	RF	Figure 8 Blank, ASTM A516-70N, ASME B16.48	
	14 to 24		Class 150	RF	Paddle Blank and Spacer, ASTM A516-70N, ASME B16.48	
	30 to 48		Class 150	RF	Paddle Blank and Spacer, ASTM A516-70N, Impact Tested @ -29ºC, Calc. wall thickness, ASME B16.48 as applicable	16,15
Fittings						
Threadolet	2 to 48	¾ to 1 ½	Class 3000	IRE x TE(F)	ASTM A105N, MSS SP-97	6,42
Nipolet, NPT	2 to 48	¾ to 1 ½	Class 3000	IRE x TE(F)	ASTM A105N, S-160 bore, MSS SP-97 as applicable	6
Sockolet	2 to 48	¾ to 1 ½	Class 3000	IRE x SW	ASTM A105N, MSS SP-97	
Latrolet	2 to 48	¾ to 1 ½	Class 3000	IRE x SW	ASTM A105N, MSS SP-97 as applicable	
Elbolet	2 to 48	¾ to 1 ½	Class 3000	IRE x SW	ASTM A105N, MSS SP-97 as applicable	48
Nipolet, PE	2 to 48	¾ to 1 ½	Class 3000	IRE x PE	ASTM A105N, S-80 bore, MSS SP-97 as applicable	
90º Ell	¾ to 1 ½		Class 3000	SW	ASTM A105N, ASME B16.11	
45º Ell	¾ to 1 ½		Class 3000	SW	ASTM A105N, ASME B16.11	
Tee	¾ to 1 ½		Class 3000	SW	ASTM A105N, ASME B16.11	
Tee (Red)	1 to 1 ½	¾ to 1	Class 3000	SW	ASTM A105N, ASME B16.11	
Plug	¾ to 1 ½		-	TE	ASTM A105N, Solid Round Head, ASME B16.11	6,12
Coupling	¾ to 1 ½		Class 3000	SW	ASTM A105N, ASME B16.11	
Coupling (Red)	1 to 1 ½	¾ to 1	Class 3000	SW	ASTM A105N, ASME B16.11	
Union (GJ)	¾ to 1 ½		Class 3000	SW	ASTM A105N, integral seat, MSS SP-83 (rated per ASME B16.11)	
Cap	¾ to 1 ½		Class 3000	TE	ASTM A105N, ASME B16.11	6
Cap	¾ to 1 ½		Class 3000	SW	ASTM A105N, ASME B16.11	
Bushing	-		-	-	Not Permitted	
Weldolet	6 to 36	1 ½ to 2	S-Std/S-80	IRE x BE	ASTM A105N, MSS SP-97	46
Weldolet	42 to 48	1 ½ to 2	S-XS/S-80	IRE x BE	ASTM A105N, MSS SP-97	46
Weldolet	8 to 36	3 to 16	S-Std/S-Std	IRE x BE	ASTM A105N, MSS SP-97	
Weldolet	42 to 48	3 to 20	S-XS/S-Std	IRE x BE	ASTM A105N, MSS SP-97	
Latrolet, BW	4 to 8	1 ½	S-Std/S-80	IRE x BE	ASTM A105N, MSS SP-97	46
Nipoflange	6 to 36	1 ½ to 2	Class 150	IRE x RF	IRE (S-Std run) x RF S-80 bore, ASTM A105N, MSS SP-97 and ASME B16.5 as applicable	46
Nipoflange	42 to 48	1 ½ to 2	Class 150	IRE x RF	IRE (S-XS run) x RF S-80 bore, ASTM A105N, MSS SP-97 and ASME B16.5 as applicable	46
Nipoflange	8 to 36	3 to 16	Class 150	IRE x RF	IRE (S-Std run) x RF S-Std bore, ASTM A105N, MSS SP-97 and ASME B16.5 as applicable	
Nipoflange	42 to 48	3 to 20	Class 150	IRE x RF	IRE (S-XS run) x RF S-Std bore, ASTM A105N, MSS SP-97 and ASME B16.5 as applicable	
Latroflange	4 to 8	1 ½	Class 150	IRE x RF	IRE (S-Std run) x RF S-80 bore, ASTM A105N, MSS SP-97 and ASME B16.5 as applicable	46
90º Ell	2		S-80	BE	ASTM A234-WPB-S, ASME B16.9	
90º Ell	3 to 24		S-Std	BE	ASTM A234-WPB-S, ASME B16.9	
90º Ell	30 to 36		S-Std	BE	ASTM A234-WPB-WX, ASME B16.9	
90º Ell	42 to 48		S-XS	BE	ASTM A234-WPB-WX, ASME B16.9	
45º Ell	2		S-80	BE	ASTM A234-WPB-S, ASME B16.9	
45º Ell	3 to 24		S-Std	BE	ASTM A234-WPB-S, ASME B16.9	

ITEM	NPS LGE	NPS SML	RATING	ENDS	GENERAL DESCRIPTION	NOTES
45º Ell	30 to 36		S-Std	BE	ASTM A234-WPB-WX, ASME B16.9	
45º Ell	42 to 48		S-XS	BE	ASTM A234-WPB-WX, ASME B16.9	
Tee	2		S-80	BE	ASTM A234-WPB-S, ASME B16.9	
Tee	3 to 24		S-Std	BE	ASTM A234-WPB-S, ASME B16.9	
Tee	30 to 36		S-Std	BE	ASTM A234-WPB-WX, ASME B16.9	
Tee	42 to 48		S-XS	BE	ASTM A234-WPB-WX, ASME B16.9	
Tee (Red)	3 to 4	2	S-Std/S-80	BE	ASTM A234-WPB-S, ASME B16.9	
Tee (Red)	4 to 24	3 to 20	S-Std	BE	ASTM A234-WPB-S, ASME B16.9	
Tee (Red)	30 to 36	10 to 30	S-Std	BE	ASTM A234-WPB-WX, ASME B16.9	
Tee (Red)	42 to 48	16 to 42	S-XS/S-Std	BE	ASTM A234-WPB-WX, ASME B16.9	
Reducer	3 to 4	2	S-Std/S-80	BE	ASTM A234-WPB-S, ASME B16.9	
Reducer	4 to 24	3 to 20	S-Std	BE	ASTM A234-WPB-S, ASME B16.9	
Reducer	30 to 36	20 to 30	S-Std	BE	ASTM A234-WPB-WX, ASME B16.9	
Reducer	42 to 48	30 to 42	S-XS/S-Std	BE	ASTM A234-WPB-WX, ASME B16.9	
Cap	2		S-80	BE	ASTM A234-WPB-S, ASME B16.9	
Cap	3 to 24		S-Std	BE	ASTM A234-WPB-S, ASME B16.9	
Cap	30 to 36		S-Std	BE	ASTM A234-WPB-WX, ASME B16.9	
Cap	42 to 48		S-XS	BE	ASTM A234-WPB-WX, ASME B16.9	
Gaskets	¾ to 24		Class 150	RF	Flexitallic Flexicarb CGI spiral wound gasket, 316 SS windings and inner ring, 3.2 mm, ASME B16.20	
	30 to 36		Class 150	RF	Flexitallic Flexicarb CGI spiral wound gasket, 316 SS windings and inner ring, 3.2 mm, ASME B16.20 (for ASME B16.47 Series A flanges)	
	42 to 48		Class 150	RF	Flexitallic Flexicarb CGI spiral wound gasket, 316 SS windings and inner ring, 4.5 mm, ASME B16.20 (for ASME B16.47 Series A flanges)	
	2 to 12		Class 300	RF	Flexitallic Flexicarb CGI spiral wound gasket, 316 SS windings and inner ring, 3.2 mm, ASME B16.20	
Bolting	All				ASTM A193-B7 stud bolts w/ ASTM A194-2H nuts	



April 18, 2013

Limited to application in accordance with Devon Canada Corporation General Specification GS-5210 and the coincident editions of Devon Canada Corporation's General Specifications listed within GS-5210.

Design Code:	Pressure Class:	Temperature (ºC):	C.A. (mm):	Service:	Primary Joints:
ASME B31.3-10	ASME 150	-29* to 186	1.5	Cat D Utility	RF/BW/SW

General Notes Applicable to Piping Class:	Primary Material:	Tubing Class:	Alternate NPT Class:
1	Killed Carbon Steel	DL74	AU13

Primary Fluids/Service:
Category D Fluid Service: Non-Corrosive Fluids (Lubricants, Hydraulic Fluids, Coolants), Dry Instrument/Utility Air
* This class may be used to MDMTs as low as -48ºC for stress ratios meeting the requirements of Fig. 323.2.2B of ASME B31.3.

Joint Non-Destructive Examination:

All Joints:	20% Visual
Butt Welds:	5% RT
Socket Welds:	5% RT (Fit-up) + 5% MT
Fillet Welds:	5% MT

Permissible use of Alternate NPT Class:

Prefabricated Non-Enclosed Packages/Modules:	**Not Permitted**
All Other Services:	**See Flowchart 1**

PWHT:		Branch Tables per GS-5210:	
Cyclic (Press, Temp) or Vibrating Service:	**BWs, SWs, and Fillets**	All Branch Connections	BCT2
All Other Services:	**Per Code**		

Primary Pressure / Leak Test Requirement:	Permissible Alternative Test:
Initial Service Leak Test as per GS-5905	as per GS-5905 on Exception Basis Only

Pressure – Temperature Rating:

Temperature (ºC)	-29 to 38	50	100	150	186				
Max. Design Pressure (kPag)	1,034	1,034	1,034	1,034	1,380				

ITEM	NPS LGE	NPS SML	RATING	ENDS	GENERAL DESCRIPTION	NOTES
Pipe	¾ to 1 ½		S-80	PE	ASTM A106-B SMLS, ASME B36.10M	
	2		S-80	BE	ASTM A106-B SMLS, ASME B36.10M	
	3 to 24		S-Std	BE	ASTM A106-B SMLS, ASME B36.10M	
	30 to 36		S-Std	BE	ASTM A671-CB60 Class 12 DSAWL (Ej = 1.00)	
	42 to 48		S-XS	BE	ASTM A671-CB60 Class 12 DSAWL (Ej = 1.00)	
Nipples						13
Regular	½		S-160	TBE	ASTM A106-B SMLS, ASME B36.10M	17
Regular	¾ to 1 ½		S-160	POE x TOE	ASTM A106-B SMLS, ASME B36.10M	6
Regular	¾ to 1 ½		S-80	PBE	ASTM A106-B SMLS, ASME B36.10M	
Swage	¾ to 1 ½	½ to 1	S-80	PLE x TSE	ASTM A234-WPB-S, MSS SP-95	6
Swage	¾ to 1 ½	½ to 1	S-80	PBE	ASTM A234-WPB-S, MSS SP-95	
Swage	2	¾ to 1 ½	S-80	BLE x PSE	ASTM A234-WPB-S, MSS SP-95	
Swage	3	¾ to 1 ½	S-40/S-80	BLE x PSE	ASTM A234-WPB-S, MSS SP-95	
Flanges	¾ to 1 ½		Class 150	RF SW	ASTM A105N, ASME B16.5	
	1 ½ to 2		Class 150	RF WN	ASTM A105N, S-80, ASME B16.5	
	3 to 24		Class 150	RF WN	ASTM A105N, S-Std, ASME B16.5	
	30 to 36		Class 150	RF WN	ASTM A105N, S-Std, ASME B16.47 Series A	
	42 to 48		Class 150	RF WN	ASTM A105N, S-XS, ASME B16.47 Series A	
Orifice	2		Class 300	RF WN	ASTM A105N, S-80, NPS ½ NPT Taps, ASME B16.36	
Flanges	3 to 12		Class 300	RF WN	ASTM A105N, S-Std, NPS ½ NPT Taps, ASME B16.36	
	≥ 14		-	-	*Use normal flanges and install pressure taps on pipe*	10
Blind	¾ to 24		Class 150	RF	ASTM A105N, ASME B16.5	
Flanges	30 to 48		Class 150	RF	ASTM A105N, ASME B16.47 Series A	
					Tapped blinds per ASME B16.5-09 Table 6	

ITEM	NPS LGE	NPS SML	RATING	ENDS	GENERAL DESCRIPTION	NOTES
Blanks	¾ to 12		Class 150	RF	Figure 8 Blank, ASTM A516-70N, ASME B16.48	
	14 to 24		Class 150	RF	Paddle Blank and Spacer, ASTM A516-70N, ASME B16.48	
	30 to 48		Class 150	RF	Paddle Blank and Spacer, ASTM A516-70N, Impact Tested @ -29ºC, Calc. wall thickness, ASME B16.48 as applicable	16,15
Fittings						
Threadolet	2 to 48	¾ to 1 ½	Class 3000	IRE x TE(F)	ASTM A105N, MSS SP-97	6,42
Nipolet, NPT	2 to 48	¾ to 1 ½	Class 3000	IRE x TE(F)	ASTM A105N, S-160 bore, MSS SP-97 as applicable	6
Sockolet	2 to 48	¾ to 1 ½	Class 3000	IRE x SW	ASTM A105N, MSS SP-97	
Latrolet	2 to 48	¾ to 1 ½	Class 3000	IRE x SW	ASTM A105N, MSS SP-97 as applicable	
Elbolet	2 to 48	¾ to 1 ½	Class 3000	IRE x SW	ASTM A105N, MSS SP-97 as applicable	
Nipolet, PE	2 to 48	¾ to 1 ½	Class 3000	IRE x PE	ASTM A105N, S-80 bore, MSS SP-97 as applicable	
90º Ell	¾ to 1 ½		Class 3000	SW	ASTM A105N, ASME B16.11	
45º Ell	¾ to 1 ½		Class 3000	SW	ASTM A105N, ASME B16.11	
Tee	¾ to 1 ½		Class 3000	SW	ASTM A105N, ASME B16.11	
Tee (Red)	1 to 1 ½	¾ to 1	Class 3000	SW	ASTM A105N, ASME B16.11	
Plug	¾ to 1 ½		-	TE	ASTM A105N, Solid Round Head, ASME B16.11	6,12
Coupling	¾ to 1 ½		Class 3000	SW	ASTM A105N, ASME B16.11	
Coupling (Red)	1 to 1 ½	¾ to 1	Class 3000	SW	ASTM A105N, ASME B16.11	
Union (GJ)	¾ to 1 ½		Class 3000	SW	ASTM A105N, integral seat, MSS SP-83 (rated per ASME B16.11)	
Cap	¾ to 1 ½		Class 3000	TE	ASTM A105N, ASME B16.11	6
Cap	¾ to 1 ½		Class 3000	SW	ASTM A105N, ASME B16.11	
Bushing	-		-	-	Not Permitted	
Weldolet	6 to 36	1 ½ to 2	S-Std/S-80	IRE x BE	ASTM A105N, MSS SP-97	46
Weldolet	42 to 48	1 ½ to 2	S-XS/S-80	IRE x BE	ASTM A105N, MSS SP-97	46
Weldolet	8 to 36	3 to 18	S-Std/S-Std	IRE x BE	ASTM A105N, MSS SP-97	
Weldolet	42 to 48	3 to 24	S-XS/S-Std	IRE x BE	ASTM A105N, MSS SP-97	
Latrolet, BW	4 to 8	1 ½	S-Std/S-80	IRE x BE	ASTM A105N, MSS SP-97	46
Nipoflange	6 to 36	1 ½ to 2	Class 150	IRE x RF	IRE (S-Std run) x RF S-80 bore, ASTM A105N, MSS SP-97 and ASME B16.5 as applicable	46
Nipoflange	42 to 48	1 ½ to 2	Class 150	IRE x RF	IRE (S-XS run) x RF S-80 bore, ASTM A105N, MSS SP-97 and ASME B16.5 as applicable	46
Nipoflange	8 to 36	3 to 18	Class 150	IRE x RF	IRE (S-Std run) x RF S-Std bore, ASTM A105N, MSS SP-97 and ASME B16.5 as applicable	
Nipoflange	42 to 48	3 to 24	Class 150	IRE x RF	IRE (S-XS run) x RF S-Std bore, ASTM A105N, MSS SP-97 and ASME B16.5 as applicable	
Latroflange	4 to 8	1 ½	Class 150	IRE x RF	IRE (S-Std run) x RF S-80 bore, ASTM A105N, MSS SP-97 and ASME B16.5 as applicable	46
90º Ell	2		S-80	BE	ASTM A234-WPB-S, ASME B16.9	
90º Ell	3 to 24		S-Std	BE	ASTM A234-WPB-S, ASME B16.9	
90º Ell	30 to 36		S-Std	BE	ASTM A234-WPB-WX, ASME B16.9	
90º Ell	42 to 48		S-XS	BE	ASTM A234-WPB-WX, ASME B16.9	
45º Ell	2		S-80	BE	ASTM A234-WPB-S, ASME B16.9	
45º Ell	3 to 24		S-Std	BE	ASTM A234-WPB-S, ASME B16.9	

ITEM	NPS LGE	NPS SML	RATING	ENDS	GENERAL DESCRIPTION	NOTES
45º Ell	30 to 36		S-Std	BE	ASTM A234-WPB-WX, ASME B16.9	
45º Ell	42 to 48		S-XS	BE	ASTM A234-WPB-WX, ASME B16.9	
Tee	2		S-80	BE	ASTM A234-WPB-S, ASME B16.9	
Tee	3 to 24		S-Std	BE	ASTM A234-WPB-S, ASME B16.9	
Tee	30 to 36		S-Std	BE	ASTM A234-WPB-WX, ASME B16.9	
Tee	42 to 48		S-XS	BE	ASTM A234-WPB-WX, ASME B16.9	
Tee (Red)	3 to 4	2	S-Std/S-80	BE	ASTM A234-WPB-S, ASME B16.9	
Tee (Red)	4 to 24	3 to 20	S-Std	BE	ASTM A234-WPB-S, ASME B16.9	
Tee (Red)	30 to 36	10 to 30	S-Std	BE	ASTM A234-WPB-WX, ASME B16.9	
Tee (Red)	42 to 48	16 to 42	S-XS/S-Std	BE	ASTM A234-WPB-WX, ASME B16.9	
Reducer	3 to 4	2	S-Std/S-80	BE	ASTM A234-WPB-S, ASME B16.9	
Reducer	4 to 24	3 to 20	S-Std	BE	ASTM A234-WPB-S, ASME B16.9	
Reducer	30 to 36	20 to 30	S-Std	BE	ASTM A234-WPB-WX, ASME B16.9	
Reducer	42 to 48	30 to 42	S-XS/S-Std	BE	ASTM A234-WPB-WX, ASME B16.9	
Cap	2		S-80	BE	ASTM A234-WPB-S, ASME B16.9	
Cap	3 to 24		S-Std	BE	ASTM A234-WPB-S, ASME B16.9	
Cap	30 to 36		S-Std	BE	ASTM A234-WPB-WX, ASME B16.9	
Cap	42 to 48		S-XS	BE	ASTM A234-WPB-WX, ASME B16.9	
Gaskets	¾ to 24		Class 150	RF	Flexitallic "SF 2401" or Garlock "Blue-Gard Style 3000", 3 mm flat sheet gasket, ASME B16.21	
	30 to 48		Class 150	RF	Flexitallic "SF 2401" or Garlock "Blue-Gard Style 3000", 3 mm flat sheet gasket, ASME B16.21	
	2 to 12		Class 300	RF	Flexitallic Flexicarb CGI spiral wound gasket, 316 SS windings and inner ring, 3.2 mm, ASME B16.20	
Bolting	All				ASTM A193-B7 stud bolts w/ ASTM A194-2H nuts	

PROFESSIONAL ENGINEER ALBERTA
GEOFFREY C. FRAZER

April 18, 2013

Limited to application in accordance with Devon Canada Corporation General Specification GS-5210 and the coincident editions of Devon Canada Corporation's General Specifications listed within GS-5210.



E22 PSV Certificate of Compliance

2303-8th Street, Nisku Alberta, T9E-7Z3 CANADA

5Blue
Process Equipment Inc.

See section B54

2303-8th Street, Nisku Alberta, T9E-7Z3 CANADA

E23 Certified Dimensional Drawings

2303-8th Street, Nisku Alberta, T9E-7Z3 CANADA

This section does not apply

E26 Tubing Schematic

2303-8th Street, Nisku Alberta, T9E-7Z3 CANADA

This section does not apply

E29 Canadian Registration Number (CRN) Certificate

2303-8th Street, Nisku Alberta, T9E-7Z3 CANADA

5Blue
Process Equipment Inc.

See section E6

F. OTHER DOCUMENTATION

5Blue
Process Equipment Inc.

F3 Recommended Spare Parts with Prices for Start-up

2303-8th Street, Nisku Alberta, T9E-7Z3 CANADA

Devon Ferrier Central Processing Facility - Installation, Commission, Start-up Spares

VENDOR: 5Blue Process Equipment Inc.	MR/PO: 5B1108

Description

Gaskets/studs/nuts for start up spares: (1) 20” CL 150, (1) 2" CL 300

(2) 1-1/8" Ø x 6-1/4" LG STUD c/w (2) HEX NUTS EACH

BOLTING TO BE SA-193-B7 AND SA-194-2H MATERIAL GASKETS TO BE SPIRAL WOUND 316 SS WITH FLEXIBLE CHLORITE FILLER AND CARBON STEEL INNER AND CENTRING RING (PINK STRIPE)



F4 Recommended Spare Parts with Prices for 2 Years' Operation

2303-8th Street, Nisku Alberta, T9E-7Z3 CANADA

This section does not apply

5Blue
Process Equipment Inc.

F6 Installation, Operation & Maintenance Manual

2303-8th Street, Nisku Alberta, T9E-7Z3 CANADA

Manual Supplement
00809-0400-2654, Rev CA
November 2003

Sensor Wiring Instructions and Approval Drawings

Wiring Instructions . . . . . page 1-1
Approval Drawings for Hazardous Location Installation . . . . . page 1-3

WIRING INSTRUCTIONS

Series 58C, 68, 68Q, and 78 RTDs

Series 58C, 68, 68Q, and 78 temperature sensors are provided with four lead wires and can be used in 2-wire, 3-wire, or 4-wire configurations. In addition, the Series 78 sensor is available with dual elements (dual 3-wire configuration). See Figure 1-1.

Figure 1-1. Series 68, 78, and 58C Lead Wire Configurations.

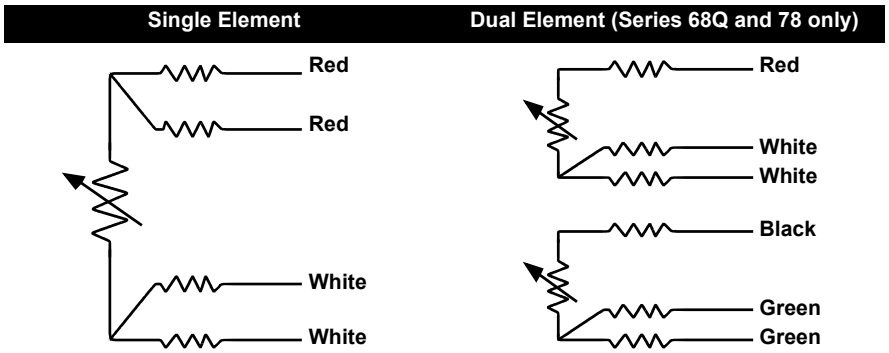

NOTE: For 3-wire systems use one White and two Red leads. Do not common the White leads. Insulate or terminate the unused White lead in a manner that prevents shorting to the ground. For 2-wire systems, common both sets of leads.

Series 58C Sheath Cutting Procedure

1. Determine the length to which the sheath will be cut. The finished length needs to include an additional 1.5 inches for compression fittings, or 2.5 inches for spring-loaded fittings (see Figure 1-2).
2. Remove and save the heat shrink tubing from the rear of the sensor.
3. Place the sensor in a vise, taking care not to overtighten, and position the tubing cutter on the sheath.
4. Score the sheath to a depth of approximately 1/64 inch. **To prevent damage to the lead wire insulation, do not cut completely through the sheath**.
5. Firmly grasp the end of the sheath with your hand or a pair of pliers. Using a sharp snapping motion, break off and remove the excess sheath material. Take care not to strip or damage the lead wire insulation while removing the excess sheath material.

NOTE
If you are unable to easily break off the excess sheath material, deepen the score and repeat Step 5.

6. Replace the heat shrink tubing.

Figure 1-2. Series 58C Sensor Dimensional Drawings

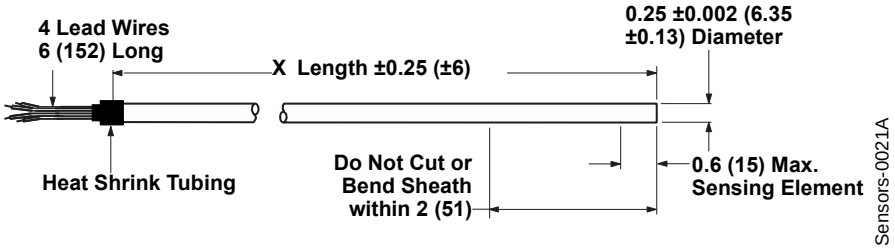

Series 183 Thermocouples

Rosemount Series 183 Thermocouples are manufactured using ISA Type J, K, E, or T wire with “Special Limits of Error” accuracy, the characteristics of which are outlined in Table 1-1. They can be installed using different junction and lead wire configurations (see Figures 1-3 and 1-4).

Table 1-1. Characteristics of Series 183 Thermocouple Types.

ISA Thermocouple Types	Thermocouple Wire Alloys	Temperature Range °C	Temperature Range °F	Limits of Error (Interchangeability)
J	Iron/Constantan	0 to 760	(32 to 1400)	±1.1 °C or ±0.4% of measured temperature, whichever is greater
K	Chromel/Alumel	0 to 1150	(32 to 2102)	±1.1 °C or ±0.4% of measured temperature, whichever is greater
E	Chromel/Constantan	0 to 900	(32 to 1652)	±1.0 °C or ±0.4% of measured temperature, whichever is greater
T	Copper/Constantan	–180 to 0	(–292 to 32)	±1.0 °C or ±1.5% of measured temperature, whichever is greater
		0 to 371	(32 to 700)	±0.5 °C or ±0.4% of measured temperature, whichever is greater

Figure 1-3. Series 183 Junction Configurations

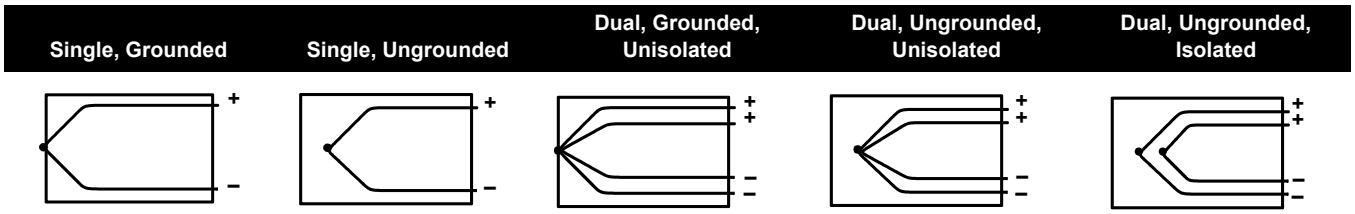

Figure 1-4. Series 183 Lead Wire Configurations

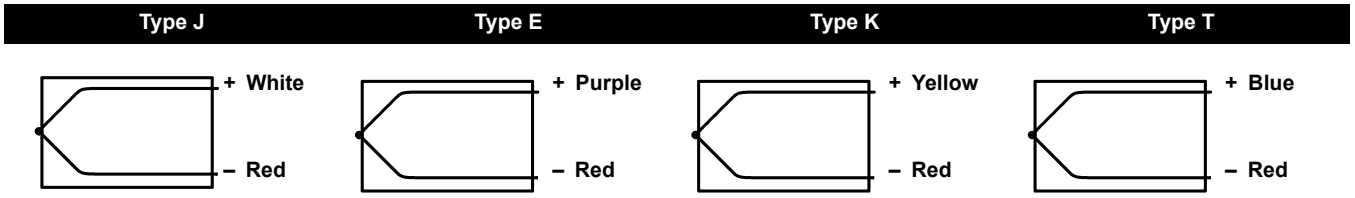

APPROVAL DRAWINGS FOR HAZARDOUS LOCATION INSTALLATION

Rosemount Series 68, 78, and 183 Temperature Sensors can be ordered with Factory Mutual (FM) and Canadian Standards Association (CSA) Explosion-proof approvals. Install in accordance with applicable approval drawings to maintain certified ratings.

Factory Mutual (FM) Explosion-Proof

Figure 1-5. Installation Drawing 00068-0013, Rev. AC

CONFIDENTIAL AND PROPRIETARY INFORMATION IS CONTAINED HEREIN AND MUST BE HANDLED ACCORDINGLY

REVISIONS

REV	DESCRIPTION	CHG. NO.	APP'D	DATE
AC	CHANGED NOTE 6.	RTC1008620	K.M.N.	3/14/00

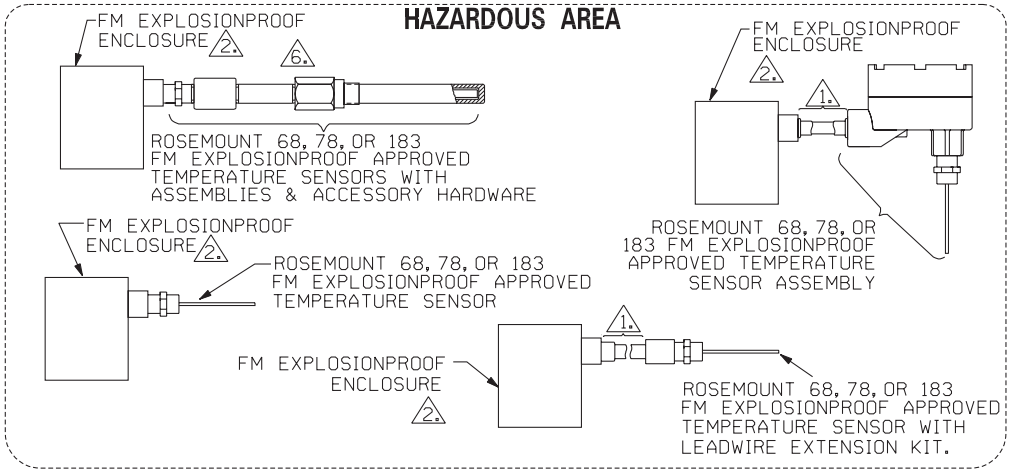

ROSEMOUNT 68, 78, & 183 TEMPERATURE SENSORS, ASSEMBLIES, AND ACCESSORY HARDWARE FM APPROVED FOR THE FOLLOWING HAZARDOUS LOCATIONS: EXPLOSIONPROOF: CLASS I, DIV. 1, GROUPS B, C, D

DUST IGNITIONPROOF : CLASS II & III, DIV. 1, GROUPS E, F, G

MAX AMB. TEMP.: 245°C

NEMA 4X 5.

4. COMPONENTS REQUIRED TO BE APPROVED MUST BE APPROVED FOR GAS GROUP APPROPRIATE TO AREA CLASSIFICATION.

3. ALL CONDUIT THREADS TO BE ASSEMBLED FIVE FULL THREADS MINIMUM.

2. FM EXPLOSIONPROOF ENCLOSURE MUST NOT BE CONNECTED TO EQUIPMENT GENERATING MORE THAN 250VAC.

1. WIRING METHOD SUITABLE FOR CLASS I, DIV 1, ANY LENGTH.

6. 68, 78, & 183 SPRING LOADED TEMPERATURE SENSORS MUST BE PLACED IN A LISTED OR APPROVED THERMOWELL RATED FOR APPROPRIATE AREA CLASSIFICATION TO PROVIDE A SEAL FROM THE PROCESS.

5. CARBON STEEL THERMOWELLS ARE APPROVED TO NEMA 4 ONLY.

NOTES

CAD Maintained, (MICROSTATION)

UNLESS OTHERWISE SPECIFIED DIMENSIONS IN INCHES [mm]. REMOVE ALL BURRS AND SHARP EDGES. MACHINE SURFACE FINISH 125

-TOLERANCE-
.X ± .1 [2,5]
.XX ± .02 [0,5]
.XXX ± .010 [0,25]

FRACTIONS ± 1/32 ANGLES ± 2°

DO NOT SCALE PRINT

CONTRACT NO.

DR.	C.SCRIBNER	7/9/92
CHK'D		
APP'D.	D. R. ROSSI	8/7/92
APP'D. GOVT.		

ROSEMOUNT® MEASUREMENT
FISHER-ROSEMOUNT
Rosemount Inc.
12001 Technology Drive
Eden Prairie, MN 55344 USA

TITLE: MODEL 68, 78, & 183 EXPLOSIONPROOF INSTALLATION DRAWING, FACTORY MUTUAL

SIZE	FSCM NO	DWG NO.
A		00068-0013

SCALE NONE WT. SHEET 1 OF 1

NOTE
For Hand-Tight Assembly Option XA: End-User (installer) must unscrew threaded joints, then reassemble and tighten all joints per installation drawing 00068-0013.

Canadian Standards Association (CSA) Explosion-Proof

Figure 1-6. Installation Drawing 00068-0033, Rev. AA

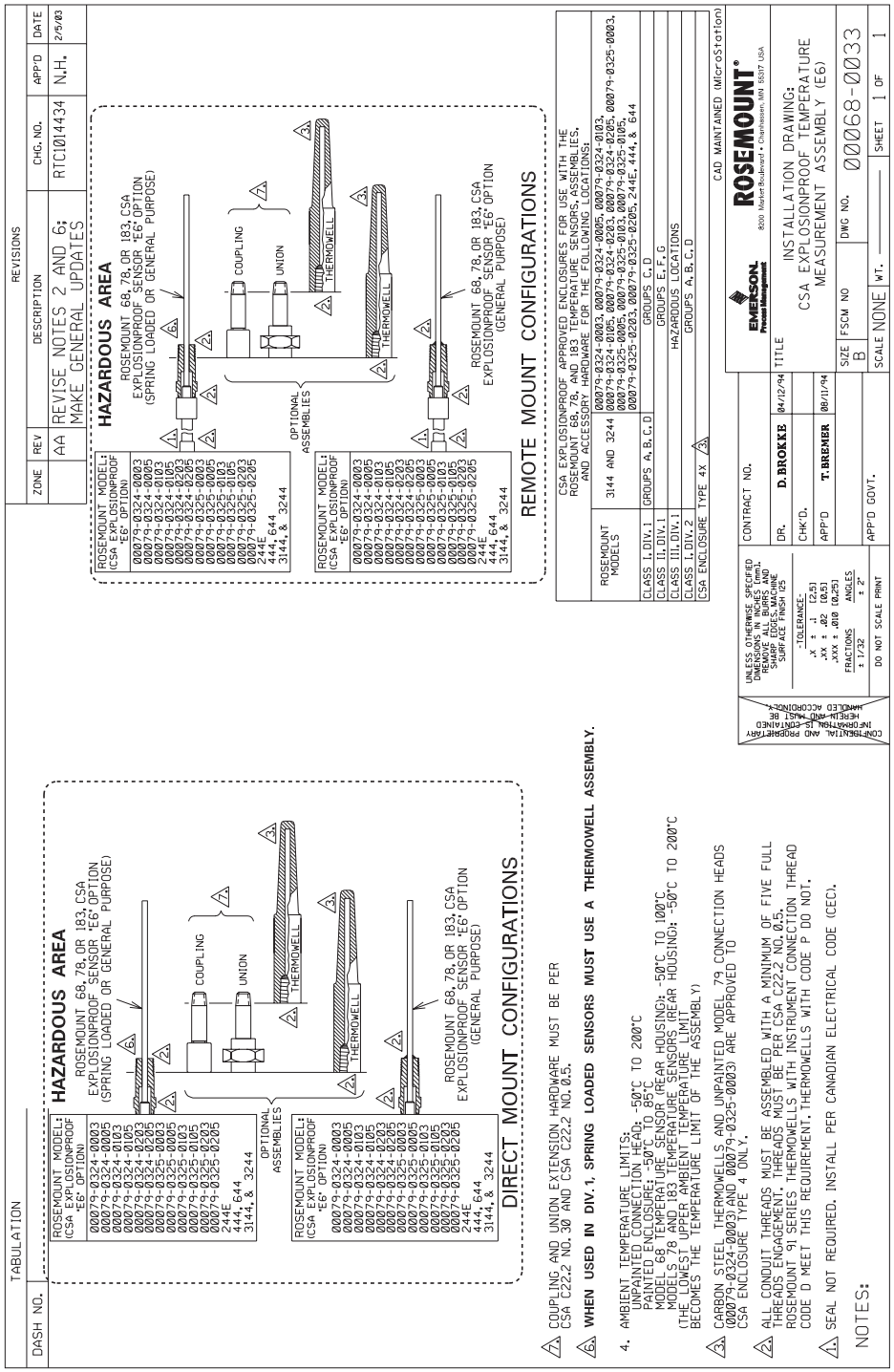

NOTE

For Hand-Tight Assembly Option XA: End-User (installer) must unscrew threaded joints, then reassemble and tighten all joints per installation drawing 00068-0033.

CENELEC Flameproof

Figure 1-7. Installation Drawing 03144-0324, Rev. AB

CONFIDENTIAL AND PROPRIETARY INFORMATION IS CONTAINED HEREIN AND MUST BE HANDLED ACCORDINGLY

REVISIONS

REV	DESCRIPTION	CHG. NO.	APP'D	DATE
AA	NEW RELEASE	RTC1Ø11243	D.B.	7/17/Ø1
AB	CHANGE ISSEP REFERENCES TO KEMA	RTC1Ø11874	D.B.	11/26/Ø1

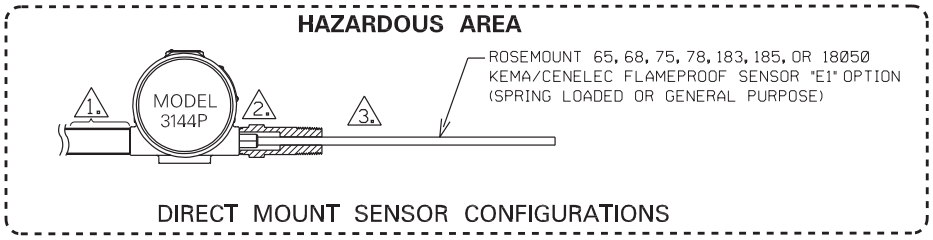

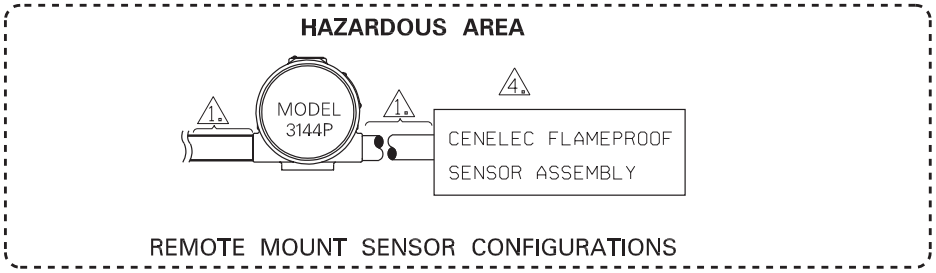

7. WAIT 1Ø SECONDS AFTER DISCONNECTING POWER BEFORE REMOVING COVER.
6. A CONDUIT PLUG MUST BE INSTALLED INTO ANY UNUSED CONDUIT ENTRIES.
5. ROSEMOUNT MODELS 3144P KEMA/CENELEC FLAMEPROOF APPROVAL Ex II 2 G
   DESCRIPTION: EEx d IIC T6 (Tamb= -40°C TO +70°C) T5 (-40°C TO +80°C).
   IP66

4. TEMPERATURE SENSOR ASSEMBLY MUST BE CENELEC APPROVED FOR APPROPRIATE AREA CLASSIFICATION.
3. SPRING LOADED SENSORS MUST USE A THERMOWELL ASSEMBLY.
2. THREADS MUST BE ASSEMBLED WITH LOCTITE THREAD SEALANT AND HAVE A MINIMUM OF FIVE FULL THREADS ENGAGEMENT AND 8 mm AXIAL LENGTH ENGAGEMENT.
1. INSTALL PER LOCAL INSTALLATION CODES.
   CENELEC APPROVED CABLE ENTRY OR STOPPING BOX REQUIRED.

CAD MAINTAINED (MicroStation)

UNLESS OTHERWISE SPECIFIED DIMENSIONS IN INCHES [mm]. REMOVE ALL BURRS AND SHARP EDGES. MACHINE SURFACE FINISH 125

-TOLERANCE-
.X ± .1 [2,5]
.XX ± .02 [Ø,5]
.XXX ± .Ø1Ø [Ø,25]
FRACTIONS ± 1/32 ANGLES ± 2°

DO NOT SCALE PRINT

CONTRACT NO.

DR. NGA DOAN 6/29/Ø1
CHK'D
APP'D. DIRK BAUSCHKE 7/17/Ø1
APP'D. GOVT.

EMERSON. Process Management
ROSEMOUNT®
8200 Market Boulevard • Chanhassen, MN 55317 USA

TITLE INSTALLATION DRAWING:
KEMA/CENELEC FLAMEPROOF TEMPERATURE MEASUREMENT ASSEMBLY (EI)

SIZE A | FSCM NO | DWG NO. Ø3144-Ø324
SCALE NONE | WT. | SHEET 1 OF 1

Standard Association of Australia (SAA) Flameproof

Figure 1-8. Drawing 03144-0225, Rev. A

PROPRIETARY INFORMATION IS CONTAINED HEREIN AND MUST BE HANDLED ACCORDINGLY
BY _____ DATE _____

REVISIONS

REV	DESCRIPTION	CHG. NO.	APP'D	DATE
A	INITIAL RELEASE	669701	J.D.J.	10/12/95

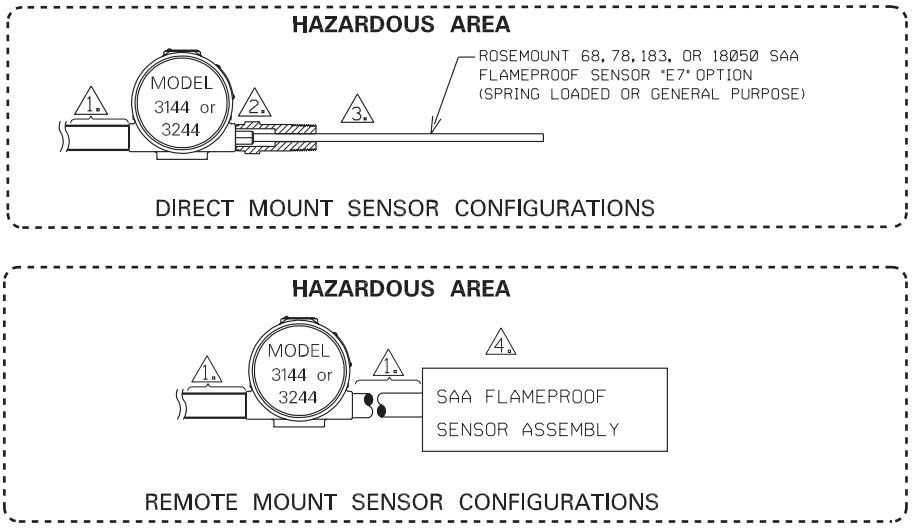

7. WAIT 10 SECONDS AFTER DISCONNECTING POWER BEFORE REMOVING COVER.

6. A CONDUIT PLUG MUST BE INSTALLED INTO ANY UNUSED CONDUIT ENTRIES.

5. ROSEMOUNT MODELS 3144 & 3244 SAA FLAMEPROOF
APPROVAL DESCRIPTION: Ex d IIC T6 (Tamb= -20°C TO +60°C).
IP65

4. TEMPERATURE SENSOR ASSEMBLY MUST BE SAA APPROVED FOR APPROPRIATE AREA CLASSIFICATION.

3. SPRING LOADED SENSORS MUST USE A THERMOWELL ASSEMBLY.

2. THREADS MUST BE ASSEMBLED WITH LOCTITE THREAD SEALANT AND HAVE A MINIMUM OF FIVE FULL THREADS ENGAGEMENT AND 8 mm AXIAL LENGTH ENGAGEMENT.

1. INSTALL PER LOCAL INSTALLATION CODES.
SAA APPROVED CABLE ENTRY OR STOPPING BOX REQUIRED.

THIS DRAWING WAS CREATED ON CAD. DRAWING IS ARCHIVED ON MAGNETIC TAPE FOR ECO CHANGES.

UNLESS OTHERWISE SPECIFIED DIMENSIONS IN INCHES. REMOVE ALL BURRS AND SHARP EDGES. MACHINE SURFACE FINISH 125

- TOLERANCES -

DECIMALS .X±.1 .XX±.02 .XXX±.010
FRACTIONS ±1/32
ANGLES ±2°

DO NOT SCALE PRINT

CONTRACT NO.

DR. P. BEDNEY 10/6/95
CHK'D JACK JOH
APP'D. JACK JOHNSON 10/12/95

APP'D. GOVT.

ROSEMOUNT® Measurement Control Analytical Valves

Rosemount Inc.
12001 Technology Drive
Eden Prairie, MN 55344 USA

TITLE INSTALLATION DRAWING:
SAA FLAMEPROOF TEMPERATURE MEASUREMENT ASSEMBLY (E7)

SIZE	FSCM NO	DWG NO.
A		03144-0225

SCALE NONE WT. _____ SHEET 1 OF 1

Series 58C, 68, 68Q, and 78 RTD

Manual Supplement
00809-0400-2654, Rev CA
November 2003

Rosemount and the Rosemount logotype are registered trademarks of Rosemount Inc.
All other marks are the property of their respective owners.

Emerson Process Management

Rosemount Inc.
8200 Market Boulevard
Chanhassen, MN 55317 USA
T (U.S.) 1-800-999-9307
T (International) (952) 906-8888
F (952) 949-7001

www.rosemount.com

Emerson Process Management Temperature GmbH
Frankenstrasse 21
63791 Karlstein
Germany
T 49 (6188) 992 0
F 49 (6188) 992 112

Emerson Process Management Asia Pacific Private Limited
1 Pandan Crescent
Singapore 128461
T (65) 6777 8211
F (65) 6777 0947
AP.RMT-Specialist@emersonprocess.com

© 2003 Rosemount Inc. All rights reserved.

EMERSON™
Process Management

Reference Manual
00809-0301-2654, Rev BA
September 2009

RTD and Thermocouple Assemblies Reference Manual



CE

ROSEMOUNT®

www.rosemount.com

EMERSON™
Process Management

Reference Manual
00809-0301-2654, Rev BA
September 2009

Mounting and Installation Advice for Resistance Thermometers and Thermocouple Assemblies

NOTICE

Read this manual before working with the product. For personal and system safety, and for optimum product performance, make sure you thoroughly understand the contents before installing, using, or maintaining this product.

For further details please contact your local Rosemount representative.

⚠CAUTION

The products described in this document are NOT designed for nuclear-qualified applications. Using non-nuclear qualified products in applications that require nuclear-qualified hardware or products may cause inaccurate readings.

For information on Rosemount nuclear-qualified products, contact your local Emerson Process Management Sales Representative.

Table of Contents

SECTION 1
Introduction

How to Use this Manual 1-1
Safety Messages 1-1

SECTION 2
Temperature Measurement with Resistance Thermometers

Description and Measuring Principle 2-1
Structure 2-1
Methods of Connection 2-3
Areas of Application 2-4

SECTION 3
Temperature Measurement with Thermocouples

Description and Measurement Principle 3-1
Installation of Protective Tubes 3-3
Leads and Connections 3-3
Areas of Application 3-3

SECTION 4
Assembly of Housing

Rules and Instructions 4-1
- Stress 4-1
- Torque 4-1
- Housing Assembly 4-1
- Ceramic Housing Installation 4-2
- Connection of Transmitters 4-2

APPENDIX A
Limit Tolerances of the Basic Values

APPENDIX B
Limit tolerances for Thermocouples

Section 1 Introduction

How to Use this Manual . . . . . page 1-1
Safety Messages . . . . . page 1-1

HOW TO USE THIS MANUAL

This manual provides installation, configuration, troubleshooting, and other procedures for the use of the Rosemount1075 Series. Specifications and other important information are also included.

Section 2: Temperature Measurement with Resistance Thermometers

Contains information on description and measuring principle, structure, methods of connection and areas of application.

Section 3: Temperature Measurement with Thermocouples

Contains information on description and measurement principle, installation of protective tubes, leads and connections, and areas of application.

Section 4: Assembly of Housing

Contains information on rules and regulations for the Rosemount 1075 Series.

Appendix A: Limit Tolerances of Basic Values

Provides a chart with the limit tolerances of the basic values according to DIN IEC 751 and DIN 43760.

Appendix B: Limit Tolerances for Thermocouples

Provides a chart for limit tolerances for thermocouples according to DIN IEC 584-2.

SAFETY MESSAGES

Procedures and instructions in this manual may require special precautions to ensure the safety of the personnel performing the operations. Refer to the safety messages, listed at the beginning of each section, before performing any operations.

Section 2 Temperature Measurement with Resistance Thermometers

Description and Measuring Principle . . . . . page 2-1
Structure . . . . . page 2-1
Methods of Connection . . . . . page 2-3
Areas of Application . . . . . page 2-4

DESCRIPTION AND MEASURING PRINCIPLE

Temperature measurement with resistance thermometers is based on the property possessed by all conductors and semiconductors, namely that their resistance varies as a function of temperature. This property is more or less pronounced, depending on the particular material. The relative change in the resistance as a function of temperature (dR/dt) is known as the temperature coefficient, the value of which is usually not constant over the range of temperature of interest, but is itself a function of temperature. The result is that the mathematical relationship between resistance and temperature takes the form of a high-order polynomial.

Figure 2-1 shows the change in resistance as a function of temperature for a Pt 100 resistance thermometer.

Figure 2-1. Pt 100 characteristic curve

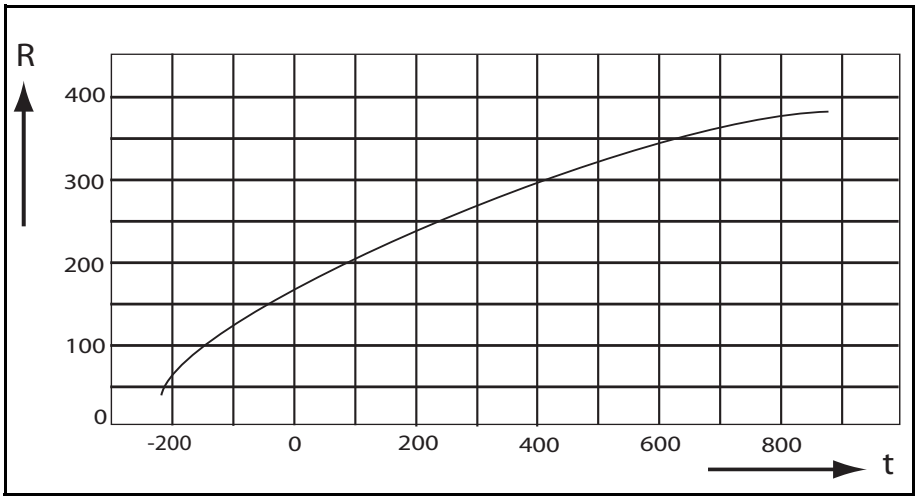

STRUCTURE

The resistance temperature detector is made up of a platinum coil wound on a suitable support. The wire coil is either fused into glass or embedded in ceramic. To meet today's requirements for more compact dimensions and higher resistance values, extremely thin platinum layers are applied to a ceramic substrate instead of wires (see Figure 2-2).

Figure 2-2. Glass wire-wound, ceramic wire-wound and thin-film resistance thermometers

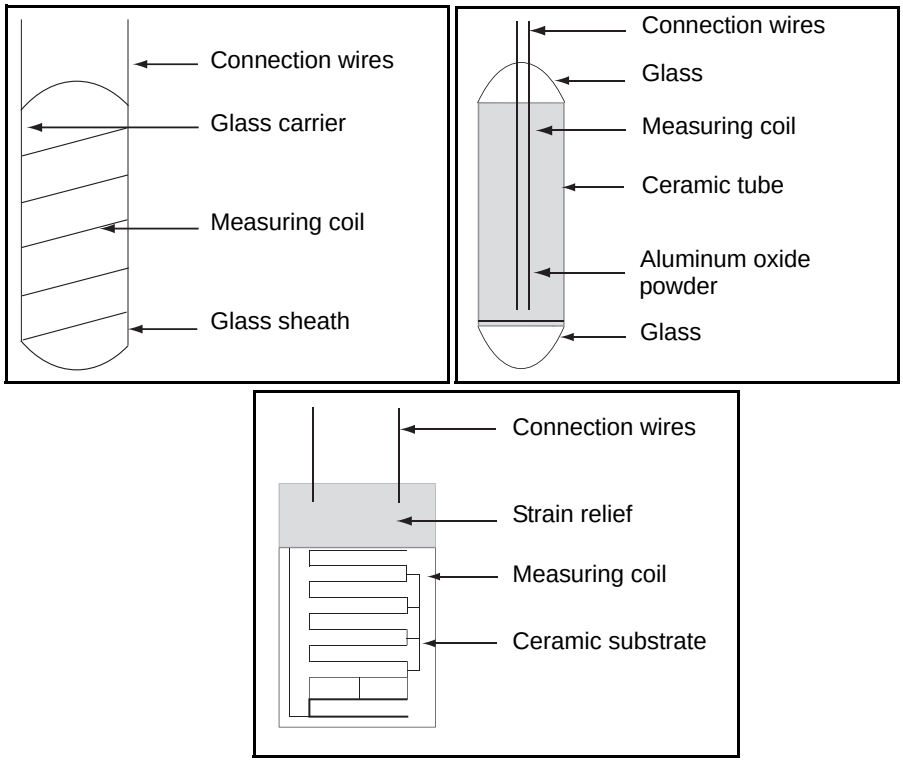

To protect them against mechanical damage (pressure of flowing liquid) these measuring elements are usually installed into suitable protective tubes (measuring inserts). This also ensures easy replacement without the need to replace the complete fitting. As resistance thermometers are contact-making temperature sensors (i.e. the sensor has to reach the temperature of the medium in which measurement is to be performed) the housing has to be adapted to the application (see Figure 2-3).

Figure 2-3. Resistance thermometer modules

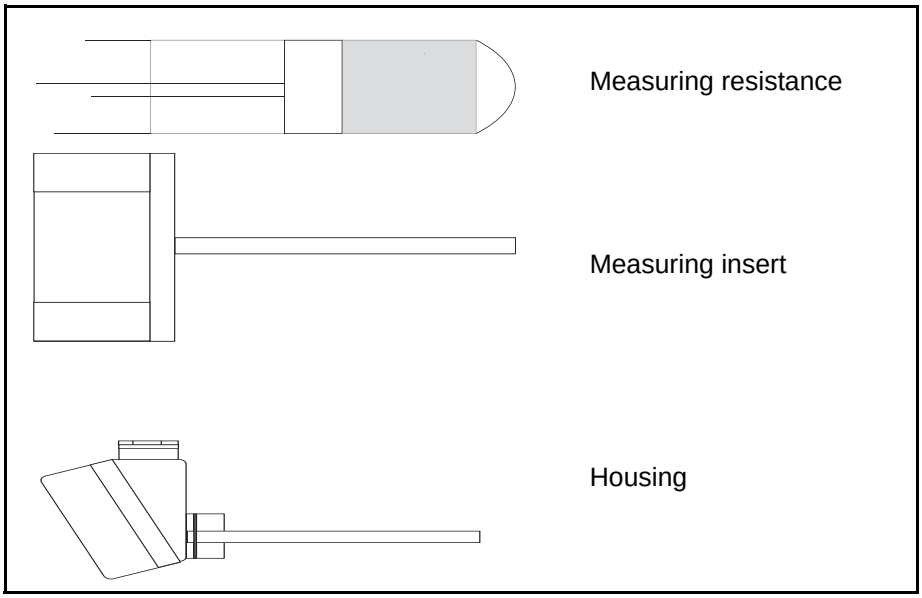

METHODS OF CONNECTION

When using resistance thermometers for temperature measurement, the fact that the measurement result is influenced by the resistance of the selected lead wire must be taken into account.

Three circuit types are commonly used: **2-wire, 3-wire, and 4-wire circuits.**

The most accurate measurements are obtained with the **4-wire circuit**, as in this case the measurement is not affected by lead wire resistance or environment temperature of lead wires (see Figure 2-4).

The **3-wire circuit** is normally used for eliminating the lead wire resistance (Wheatstone bridge).

In the case of the **2-wire circuit**, the lead wire resistance is fully measured by the measuring bridge. By the use of modern control equipment the influence of the lead wire resistance at 2-wire circuit can be compensated by a line compensation resistor, which is independent of temperature.

Figure 2-4. Methods of connection

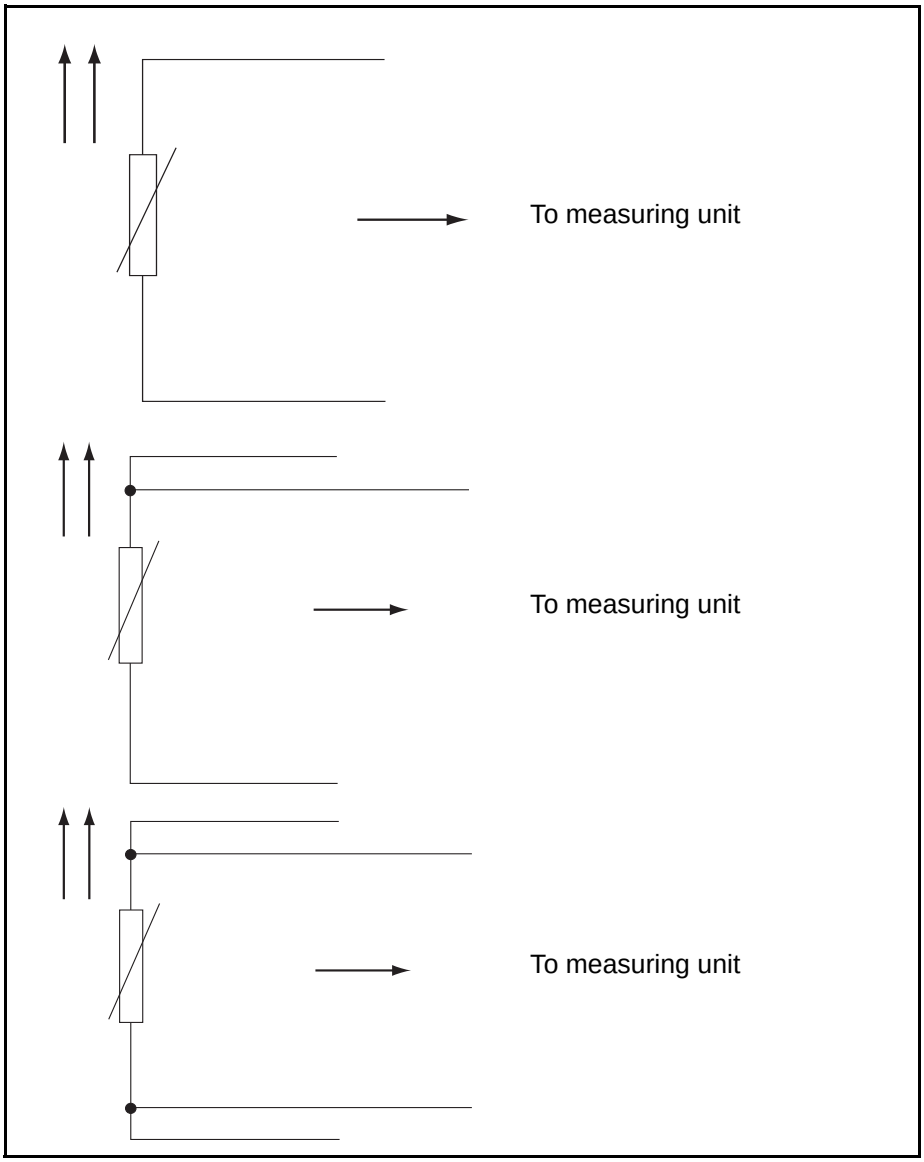

AREAS OF APPLICATION

Resistance thermometers can be used over a temperature range of -220 °C to +600 °C.

Their **advantages** are:

- High temperature ranges
- Resistance to vibration
- High immunity to electrical interference
- Long-term stability
- Robust design
- High accuracy

Resistance thermometers are used in the following **industries**:

- Chemical industries
- Petrochemical industries
- Pharmaceutical industries
- Power generation
- Mechanical engineering
- Food & beverage
- Mining

Section 3 Temperature Measurement with Thermocouples

Description and Measurement Principle . . . . . page 3-1
Installation of Protective Tubes . . . . . page 3-3
Leads and Connections . . . . . page 3-3
Areas of Application . . . . . page 3-3

DESCRIPTION AND MEASUREMENT PRINCIPLE

A thermocouple consists of two electrical conductors of different materials connected to one another at one end (measuring junction). The two free ends build a compensation point resp reference junction. The thermocouple can be extended by using an extension or a compensating cable. The extension or compensating cables are connected to a measuring instrument, e.g. a galvanometer or electronic measuring unit (see Figure 3-1).

Figure 3-1.

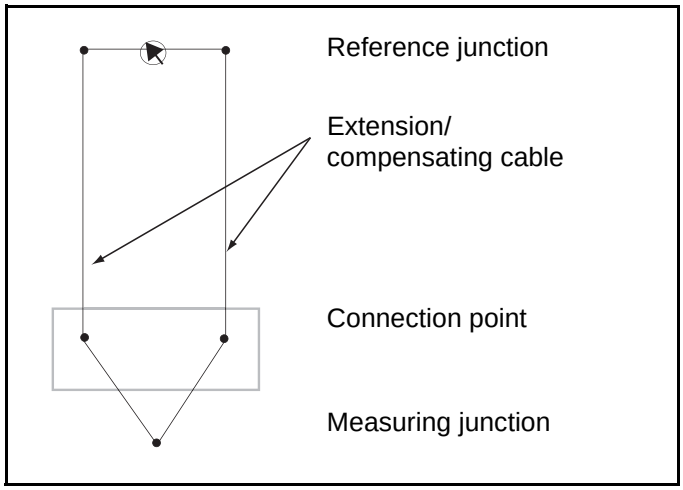

The thermoelectric voltage appearing at the reference junction depends on the thermocouple wire material and on the temperature difference between the measuring junction and the reference junction. For temperature measurement, the temperature of the reference junction must be kept constant (e.g. 0 °C) or must be well known, to make an appropriate correction in mV (see Figure 3-2).

Figure 3-2.

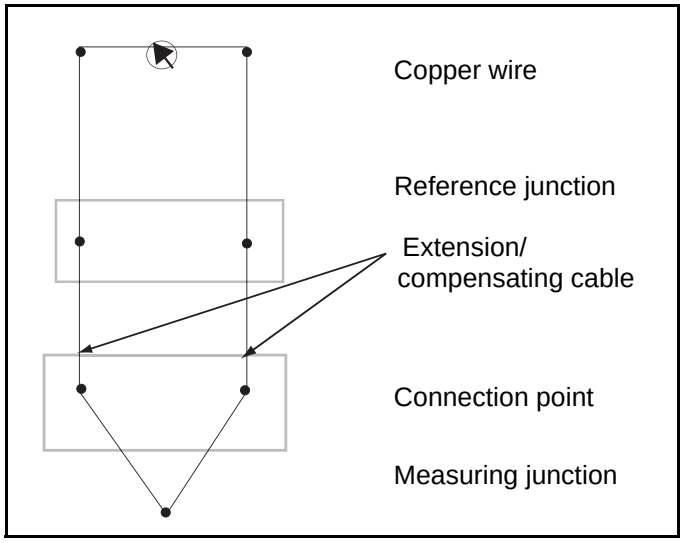

Extension cables are manufactured of the same material as the corresponding thermocouple, e.g. Cu-CuNi, Fe-CuNi. Compensating cables are manufactured of special materials.

Up to 200 °C compensating cables supply the same thermoelectric voltage as the thermocouples to which they are connected, The thermoelectric voltages of the thermocouples are laid down in so-called basic value series.

e.g.	PtRh30%-PtRh6%	Type B
	Fe-CuNi	Type J
	NiCr-NiAl	Type J
	PtRh87/13%-Pt	Type R
	PtRh90/10%-Pt	Type S
	and others in DIN IEC 584-1	
and	Fe-CuNi	Type L
	Cu0CuNi	Type U

These thermocouples are not more available for use in new plants (thermoelectric voltage according to DIN 43710) Basic value tables are available on request only at manufacturer site.

The compensating cable for a thermocouple must be make of a material to suit the particular type of thermocouple, so compensating leads are color-coded. For standardized compensating cable the regulations contained in DIN EN 60584 apply.

Maximum temperatures indicated by manufacturer have to be considered.

Most thermocouples are supplied ready for operation, that is in a protective mounting to prevent damage to the thermocouple by mechanical forces or chemical attack.

INSTALLATION OF PROTECTIVE TUBES

The protective tubes of thermocouples must be adapted to the particular operating conditions. Precious metal thermocouples are always protected with a ceramic tube, even if the unit has a metallic protective mounting.

At high temperatures the protective tubes should be installed vertically, where possible, i.e. suspended, to avoid damage deflection to the protective tube and thermocouple through bending. If specific conditions on site make a horizontal installation unavoidable, long protective tubes have to be suitably supported.

LEADS AND CONNECTIONS

When laying and connecting extension resp. compensating cables, care must be taken to connect the positive pole of the thermocouple to the positive terminal of the indicating instrument. If extension cables or compensating cables are used, care must be taken not to interchange positive and negative conductors. To prevent errors, the positive and negative leads bear a corresponding marking.

All connections must be absolutely clean and firmly tightened. The corresponding positive and negative terminals should have the same temperature potential.

The compensating cables between the thermocouple and the indicating instrument should comply with the requirements for insulated leads in power systems (VDE 0250). In exceptional cases, the regulations for insulated leads in telecommunications systems (VDE 0810) may be applied.

AREAS OF APPLICATION

In the negative temperature range, thermocouples can be used down to -200 °C. For temperatures above 1000 °C, thermocouples made of platinum and a platinum/rhodium alloys are used.

Advantages of thermocouples are:

- Very high temperature ranges
- Fast response
- Compact design
- Extremely high resistance to vibration
- Long term stability
- Robust design

Thermocouples are used in the following, and other, **industries:**

- Chemical industries
- Pharmaceutical industries
- Power generation
- Mechanical engineering
- Food & beverage
- Mining
- Iron and steel
- Ceramics and glass

Section 4 Assembly of Housing

Rules and Instructions . . . . . page 4-1
Stress . . . . . page 4-1
Torque . . . . . page 4-1
Housing Assembly . . . . . page 4-1
Ceramic Housing Installation . . . . . page 4-2
Connection of Transmitters . . . . . page 4-2

RULES AND INSTRUCTIONS

For housing assembly, please use the following instructions.

VDE/VDI 3511
Technical temperature measurement/instruction

VDE/VDI 3512
Set-up for temperature measurements

AD - instruction leaflets(1)
Working group pressure vessels

TRB - technical directions for tank construction(1)

Vd - TDV regulations(1)

Stress

The stresses indicated in the drawing apply to the supplied housing. The load data, included in the standards for every type, are valid for housing according to DIN 43763 and DIN 43772.

Torque

Starting torques for screw-in type threads

Applicable to screw-in type threads according to DIN 43763 and DIN 43772 as well as comparable housing according to customer's specifications.

G 3/8, G 1/2	50 Nm
G 3/4	100 Nm

Above starting torques are to be used as well for coupling rings with similar threads.

Housing Assembly

Assembly of housing with flange mounting

The seal is to be selected according to the requirements. During insertion of the seal, a good support is necessary. Fastening screws are to be tightened evenly and crosswise.

(1) To be considered in case of weld-in type tubes. Material, weld and pressure test according to operating conditions

Ceramic Housing Installation

Installation of ceramic housing in plants at operating temperature

Temperature of the plant:

- 1600 °C insertion speed: 1-2 cm/min.
- 1200 °C insertion speed: 10-20 cm/min.

Connection of Transmitters

When connecting transmitter, the installation-, connection, and test instructions of the manufacturers are to be considered.

Appendix A Limit Tolerances of the Basic Values

Table A-1. Limit tolerances of the basic values according to DIN IEC 751 and DIN 43760

	Basic values				Limit tolerances					
	According to DIN IEC 751 Platinum RTD-elements		According to DIN 43760 Nickel RTD-elements		According to DIN IEC 751 Platinum RTD-elements				According to DIN 43760 Nickel RTD-elements	
					Class A		Class B			
°C	Ohm	Ohm/K	Ohm	Ohm/K	Ohm	Corresp. °C	Ohm	Corresp. °C	Ohm	Corresp. °C
-200	18.49	0.44	±0.24	±0.55	±0.56	±1.3				
-100	60.25	0.41	±0.14	±0.35	±0.32	±0.8				
-60			69.5	0.47	-				±1.0	±2.1
0	100.0	0.39	100.0	0.55	±0.06	±0.15	±0.12	±0.3	±0.2	±0.4
100	138.5	0.38	161.8	0.69	±0.13	±0.35	±0.30	±0.8	±0.8	±1.1
200	175.84	0.37	240.7	0.90	±0.20	±0.55	±0.48	±1.3	±1.6	±1.8
250			289.2	1.04					±2.3	±2.1
300	212.02	0.35			±0.27	±0.75	±0.64	±1.8		
400	247.04	0.34			±0.33	±0.95	±0.79	±2.3		
500	280.90	0.33			±0.38	±1.15	±0.93	±2.8		
600	313.59	0.33			±0.43	±1.35	±1.06	±3.3		
700	345.13	0.31					±1.17	±3.8		
800	375.71	0.30					±1.28	±4.3		
850	390.26	0.29					±1.34	±4.6		

Appendix B Limit tolerances for Thermocouples

Table B-1. Limit tolerances for thermocouples according DIN IEC 584-2

Class	1	2	3(1)
Limit tolerances(2)	0.5 °C or 0.004 x |t|	1 °C or 0.0075 x |t|	1 °C or 0.015 x |t|
(a)	Limit tolerances apply to following temperature ranges		
Type T	-40 °C up to 350 °C	-40 °C up to 350 °C	-200 °C up to 40 °C
Limit tolerances(2)	1.5 °C or 0.004 x |t|	2.5 °C or 0.0075 x |t|	2.5 °C or 0.015 x |t|
(±)	Limit tolerances apply to following temperature ranges		
Type E	-40 °C up to 800 °C	-40 °C up to 900 °C	-200 °C up to 40 °C
Type J	-40 °C up to 750 °C	-40 °C up to 750 °C	--
Type K	-40 °C up to 1000 °C	-40 °C up to 1200 °C	-200 °C up to 40 °C
Limit tolerances(2)	1 °C or [1+9t-1100) x 003] °C	1.5 °C or 0.0025 x |t|	4 °C or 0.005 x |t|
(±)	Limit tolerances apply to following temperature ranges		
Type R and S	0 °C up to 1600 °C	0 °C up to 1600 °C	--
Type B	--	600 °C up to 1700 °C	600 °C up to 1700 °C

(1) Thermocouples and thermocouple wires are usually supplied with limited tolerances according to the table above valid for temperature range above of -40 °C. The thermocouple limit tolerances of same material at temperatures below -40 °C may be exceeded as stated for tolerance class 3 according to DIN IEC 584-2. Thermocouples requested by purchaser with limit tolerances according to classes 1, 2, or 3 may be obtained by special material selection.

(2) Limit tolerances for thermocouples are indicated in degrees centigrade or as percentage of the measured temperature in degrees centigrade. Whichever value is greater applies.

|t| = Temperature in degrees Centigrade

Index

Numerics
2-wire circuit 2-3
3-wire circuit 2-3
4-wire circuits 2-3

A
accuracy 2-4
AD - instruction leaflets 4-1

B
basic values A-1

C
ceramic 2-1
ceramic substrate 2-1
ceramic tube 3-3
chemical attack 3-2
color-coded 3-2
compact dimensions 2-1
compensating cable 3-1
Compensating cables 3-2
compensating leads 3-2
conductors 2-1, 3-1
Considerations 2-2
Environmental 2-4
contact-making temperature sensors 2-2
coupling rings 4-1

D
design 2-4, 3-3
DIN 43763 4-1
DIN 43772 4-1
DIN EN 60584 3-2
DIN IEC 584-2 . . . . . B-1

E
electrical interference 2-4
electronic measuring unit 3-1
Environmental Considerations . 2-4
Extension cables 3-2

F
Fastening screws 4-1
function of temperature 2-1

G
galvanometer 3-1
glass 2-1

H
hermoelectric voltage 3-2
higher resistance values 2-1
horizontal installation 3-3
housing assembly 4-1

I
immunity 2-4
independent of temperature . . 2-3
installed vertically 3-3

L
Limit tolerances A-1, B-1
load data 4-1

M
Maximum temperature 3-2
measurement result 2-3
measuring bridge 2-3
measuring elements 2-2
measuring junction 3-1
Measuring Principle 2-1
mechanical damage 2-2
mechanical forces 3-2
metallic protective mounting . . 3-3
mV 3-1

N
negative conductor 3-3
negative lead 3-3

P
platinum 2-1
platinum coil wound 2-1
platinum thermocouples 3-3
platinum/rhodium alloys 3-3
positive lead 3-3
positive pole 3-3
positive terminal 3-3
Precious metal thermocouples 3-3
protective mounting 3-2
protective tubes 2-2, 3-3
Pt 100 resistance thermometer 2-1

R
reference junction 3-1
replacement 2-2
Resistance 2-4
resistance 2-3
resistance temperature detector 2-1
Resistance thermometer modules 2-2
resistance thermometers . 2-1, 2-2
response 3-3

S
screw-in type threads 4-1
seal 4-1
semiconductors 2-1
Specifications
HART and Foundation Fieldbus A-1
stability 2-4, 3-3
standards 4-1
support 3-3

T
Temperature 2-1
temperature coefficient 2-1
Temperature Measurement . . . 3-1
Temperature measurement . . . 2-1
temperature potential 3-3
temperature range 2-4
thermocouple 3-1
thermocouple, ... 3-2
Thermocouples 3-1
TRB - technical directions for tank construction 4-1

V
Vd - TDV regulations 4-1
VDE/VDI 3511 4-1
VDE/VDI 3512 4-1
vibration 3-3
voltage 3-1

W
wire material 3-1

Standard Terms and Conditions of Sale can be found at www.rosemount.com\terms_of_sale.
The Emerson logo is a trademark and service mark of Emerson Electric Co.
Rosemount, the Rosemount logotype, and Hot Backup are registered trademarks of Rosemount Inc.
HART is a registered trademark of the HART Communication Foundation.
FOUNDATION is a trademark of the Fieldbus Foundation.
PlantWeb is a registered trademark of one of the Emerson Process Management companies.
Teflon is a registered trademark of E.I. du Pont de Nemours & Co.
All other marks are the property of their respective owners.

Emerson Process Management

Rosemount Inc.
8200 Market Boulevard
Chanhassen, MN 55317 USA
T (U.S.) 1-800-999-9307
T (International) (952) 906-8888
F (952) 949-7001

www.rosemount.com

Rosemount Temperature GmbH
Frankenstrasse 21
63791 Karlstein
Germany
T 49 (6188) 992 0
F 49 (6188) 992 112

Emerson Process Management Asia Pacific Private Limited
1 Pandan Crescent
Singapore 128461
T (665) 777 8211
F (665) 777 0947
Enquiries@AP.EmersonProcess.com

00809-0301-2654 Rev BA, 09/09

EMERSON™
Process Management

Volume 1 Temperature Sensors and Accessories (English)

- *RTD and Thermocouple offering in single and dual sensor models*
- *Barstock Thermowell offering in wide range of materials and process connections*
- *Calibration capabilities for increasing measurement accuracy*
- *Sanitary RTD for hygienic applications*



Content

Rosemount Volume 1 Temperature Sensor and Thermowells . . . . . page 2

Ordering Information

- Rosemount 68 Sensor and Thermowell . . . . . page 3
- Rosemount 78 Sensor and Thermowell . . . . . page 14
- Rosemount 183 Sensor and Thermowell . . . . . page 26
- Rosemount 68Q Sanitary Sensor . . . . . page 36
- Rosemount 58C Cut-to-Fit Sensor . . . . . page 39
- Rosemount 91 Series Thermowells . . . . . page 40

Introduction . . . . . page 46

Threaded Sensors and Assemblies . . . . . page 54

Calibration . . . . . page 64

Mounting Accessories . . . . . page 69

Hazardous Area Approvals . . . . . page 83

Rosemount Volume 1 Temperature Sensor and Thermowells

Optimize plant efficiency and increase measurement reliability with industry-proven design and specifications

- Available in a wide variety of sensing technologies – RTD and Thermocouples
- All sensor styles and lengths are available in 1/4-in. diameter
- State of the art manufacturing procedures provide robust element packaging, increasing reliability
- Industry-leading calibration capabilities allow for Callendar-van-Dusen values to give increased accuracy when paired with Rosemount transmitters
- Optional Class A accuracy for critical temperature measurement points
- Sanitary offering provides sensor assemblies approved for hygienic applications

Streamline operations and maintenance with sensor and thermowell design

- Spring loaded threaded adapter, General-purpose welded, capsule, and bayonet styles offer remote or integral transmitter mounting configuration

Explore the benefits of a Complete Point Solution from Rosemount Temperature Measurement

- An “Assemble Sensor to Specific Transmitter” option enables Emerson to provide a complete point temperature solution, delivering an installation-ready transmitter and sensor assembly
- Emerson has a complete portfolio of Single Point and High Density Temperature Measurement solutions, allowing you to effectively measure and control your processes with the reliability you trust from Rosemount products



Experience global consistency and local support from numerous worldwide Rosemount Temperature manufacturing sites



- World-class manufacturing provides globally consistent product from every factory and the capacity to fulfill the needs of any project, large or small.
- Experienced Instrumentation Consultants help select the right product for any temperature application and advise on best installation practices.
- An extensive global network of Emerson service and support personnel can be on-site when and where they are needed.

Rosemount 68 Sensor and Thermowell



The Rosemount 68 Sensor and Thermowell have designs that provide flexible and reliable temperature measurements in process environments.

Features include:

- Industry-standard Pt-100 RTD
- Variety of enclosure and connection head options
- Global hazardous-location approvals (Option Codes E5, E6, E7)
- Calibration services to give you insight to sensor performance (Option Codes V1-V8, X8, X9)
- Calibration certification documentation to accompany sensor (Option Code Q4)
- Assemble to Transmitter option (Option Code XA)

Table 1. Series 68 RTD Sensor Assemblies WITHOUT Thermowell
★ The Standard offering represents the most common options. The starred options (★) should be selected for best delivery.
The Expanded offering is subject to additional delivery lead time.

Model	Product Description	Available Safety Approvals					
		FM	ATEX	CSA	IECEx		
0068	Platinum Temperature Sensor WITHOUT thermowell						
Sensor Lead Wire Termination							
Standard							**Standard**
R	Aluminum Connection Head, Six Terminals, Flat Cover, Unpainted	Y	Y	Y	N		★
T	Aluminum Connection Head, Six Terminals, Extended Cover, Unpainted	Y	Y	Y	N		★
P	Aluminum Connection Head, Six Terminals, Flat Cover, Painted	Y	Y	Y	N		★
L	Aluminum Connection Head, Six Terminals, Extended Cover, Painted	Y	Y	Y	N		★
N	Sensor only with 6-in. PTFE-insulated, 22-gauge lead wires	Y	Y	Y	N		★
D	Rosemount Aluminum Connection Head with 1/2-in. Entries	Y	Y	Y	Y		★
Expanded							
C	Polypropylene Connection Head	N	N	N	N		
G	Rosemount SST Connection Head with 1/2-in. Entries	Y	Y	Y	Y		
Sensor Type (single element -50 to 400 °C (-58 to 752 °F))							
Standard							**Standard**
01[1][2]	Capsule Style						★
11[3]	General-purpose style						★
21[4]	Spring-loaded style						★
Expanded							
31[5]	Bayonet spring-loaded style (not available in (X) lengths over 21 inches)						
Extension Type							
Standard							**Standard**
A	Nipple Coupling						★
C	Nipple Union						★
N	None						★
Extension Length (E)							
Standard							**Standard**
00	0.0 in.						★
30	3.0 in.						★
60	6.0 in.						★

Table 1. Series 68 RTD Sensor Assemblies WITHOUT Thermowell

★ The Standard offering represents the most common options. The starred options (★) should be selected for best delivery. The Expanded offering is subject to additional delivery lead time.

Thermowell Material		
Standard		**Standard**
N	No thermowell required	★
Immersion Length (L)		
Standard		**Standard**
010[1][6]	1.0-in.	★
015	1.5-in.	★
020	2.0-in.	★
025	2.5-in.	★
030	3.0-in.	★
035	3.5-in.	★
040	4.0-in.	★
045	4.5-in.	★
050	5.0-in.	★
055	5.5-in.	★
060	6.0-in.	★
065	6.5-in.	★
070	7.0-in.	★
075	7.5-in.	★
080	8.0-in.	★
085	8.5-in.	★
090	9.0-in.	★
095	9.5-in.	★
100	10.0-in.	★
105	10.5-in.	★
110	11.0-in.	★
115	11.5-in.	★
120	12.0-in.	★
125	12.5-in.	★
130	13.0-in.	★
135	13.5-in.	★
140	14.0-in.	★
145	14.5-in.	★
150	15.0-in.	★
155	15.5-in.	★
160	16.0-in.	★
165	16.5-in.	★
170	17.0-in.	★
175	17.5-in.	★
180	18.0-in.	★
185	18.5-in.	★
190	19.0-in.	★
195	19.5-in.	★
200	20.0-in.	★
205	20.5-in.	★
210	21.0-in.	★
210	21.5-in.	★
220	22.0-in.	★
225	22.5-in.	★
230	23.0-in.	★
235	23.5-in.	★
240	24.0-in.	★
245	15.5-in.	★
250	25.0-in.	★

Table 1. Series 68 RTD Sensor Assemblies WITHOUT Thermowell
★ The Standard offering represents the most common options. The starred options (★) should be selected for best delivery.
The Expanded offering is subject to additional delivery lead time.

Standard		**Standard**
260	26.0-in.	★
270	27.0-in.	★
280	28.0-in.	★
290	29.0-in.	★
300	30.0-in.	★
310	31.0-in.	★
320	32.0-in.	★
330	33.0-in.	★
340	34.0-in.	★
350	35.0-in.	★
360	36.0-in.	★
370	37.0-in.	★
380	38.0-in.	★
390	39.0-in.	★
400	40.0-in.	★
410	41.0-in.	★
420	42.0-in.	★
430	43.0-in.	★
440	44.0-in.	★
450	45.0-in.	★
460	46.0-in.	★
470	47.0-in.	★
480	48.0-in.	★

Options (Include with selected model number)

Approval Options		
Standard		**Standard**
E5	FM Explosion-proof approval (See Figure 24)	★
E6	CSA Explosion-proof approval (See Figure 25)	★
E7(7)	IECEx Flameproof approval (See Figure 28)	★
E1	KEMA/CENELEC Flameproof approval	★
Callendar-Van Dussen Constants		
Standard		**Standard**
V1-V8	V-Callendar-van Dussen Constant (V4 not available with series 68 sensors)	★
Calibration Schedule		
Standard		**Standard**
X8	Customer-Specified Temperature Range Calibration	★
X9	Customer-Specified Single Temperature Point Calibration	★
Calibration Certification		
Standard		**Standard**
Q4	Calibration Certification, Customer-Specified Temperature	★
Mounting Adapters		
Standard		**Standard**
M5-M7	Mounting adapter: Sensor Compression Fitting: M5= 1/8 - 27 NPT, M6 = 1/4 - 18 NPT, M7 = 1/2 - 14 NPT	★
A Leadkit		
Standard		**Standard**
A1-A8	Twisted lead wire extension: A1 = 1.5 ft, A2 = 3.0 ft, A3 = 6.0 ft, A4 = 12 ft, A5 = 24 ft, A6 = 50 ft, A7 = 75 ft, A8 = 100 ft	★
B Leadkit		
Standard		**Standard**
B1-B8(8)	Shielded cable lead wire extension: B1 = 1.5 ft, B2 = 3.0 ft, B3 = 6.0 ft, B4 = 12 ft, B5 = 24 ft, B6 = 50 ft, B7 = 75 ft, B8 = 100 ft	★
C Leadkit		
Standard		**Standard**
C1-C8(8)	Armored cable lead wire extension: C1 = 1.5 ft, C2 = 3.0 ft, C3 = 6.0 ft, C4 = 12 ft, C5 = 24 ft, C6 = 50 ft, C7 = 75 ft, C8 = 100 ft	★

Table 1. Series 68 RTD Sensor Assemblies WITHOUT Thermowell

★ The Standard offering represents the most common options. The starred options (★) should be selected for best delivery. The Expanded offering is subject to additional delivery lead time.

D Leadkit		
Standard		**Standard**
D1-D8[8]	Armored cable lead wire extensions with electrical plug: D1 = 1.5 ft, D2 = 3.0 ft, D3 = 6.0 ft, D4 = 12 ft, D5 = 24 ft, D6 = 50 ft, D7 = 75 ft, D8 = 100 ft	★
L Leadkit		
Standard		**Standard**
L1-L8	Armored cable mating plugs with lead wire extension: L1 = 1.5 ft, L2 = 3.0 ft, L3 = 6.0 ft, L4 = 12 ft, L5 = 24 ft, L6 = 50 ft, L7 = 75 ft, L8 = 100 ft	★
F Leadkit		
Standard		**Standard**
F1	4-pin bayonet connector	★
H Leadkit		
Standard		**Standard**
H1-H8	4-pin connector mating plugs with lead wire extension: H1 = 1.5 ft, H2 = 3.0 ft, H3 = 6.0 ft, H4 = 12 ft, H5 = 24 ft, H6 = 50 ft, H7 = 75 ft, H8 = 100 ft	★
J Leadkit		
Standard		**Standard**
J1	Moisture-proof seal assembly for armored cables	★
Assemble to Options		
Standard		**Standard**
XA[9]	Assemble connection head or transmitter to a sensor assembly	★

(1) Capsule style available in 1-in. increments only, starting at 1-in. (i.e. 1, 2, 3-inches, etc.) See "Mounting Adapters for Series 58, 68, 78, and 183" on page 72.

(2) This option must be used with Sensor Lead Wire Termination code N and is not available with assembly code XA or with Approval codes E1, E5, E6, and E7.

(3) General-purpose sensors are only available in (L) lengths of 2.5-in. or greater.

(4) Spring loaded sensors must be installed in a thermowell assembly to meet the requirements of explosion-proof approvals code E6.

(5) Not available with Sensor Lead Wire Termination codes R, P, or C or with approval codes E1, E5, E6, or E7.

(6) 1-in. length without extension is only available in capsule style.

(7) IECEx Flame-proof Approval is only applicable if installed with Rosemount 248, 644, or 3144P transmitters.

(8) These options are not available with Sensor Lead Wire Termination codes R, P, or W.

(9) If ordering code XA with a transmitter, specify the same option on the transmitter model code.

Ordering Example

	Model	Lead Wire Termination	Sensor Type	Extension Type	Extension Length	Thermowell Material	Immersion Length	Additional Options
Typical Model Number	0068	N	11	N	00	N	045	E5

Table 2. Series 68 RTD Sensor Assemblies WITH Thermowell

★ The Standard offering represents the most common options. The starred options (★) should be selected for best delivery.
The Expanded offering is subject to additional delivery lead time.

Model	Product Description	Available Safety Approvals						
0068	Platinum Temperature Sensors WITH Thermowell		FM	ATEX	CSA	IECEx		
Sensor Lead Wire Termination								
Standard								**Standard**
R	Aluminum Connection Head, Six Terminals, Flat Cover, Unpainted		Y	Y	Y	N		★
T	Aluminum Connection Head, Six Terminals, Extended Cover, Unpainted		Y	Y	Y	N		★
P	Aluminum Connection Head, Six Terminals, Flat Cover, Painted		Y	Y	Y	N		★
L	Aluminum Connection Head, Six Terminals, Extended Cover, Painted		Y	Y	Y	N		★
N	Sensor only with 6-in. PTFE-insulated, 22-gauge lead wires		Y	Y	Y	N		★
D	Rosemount Aluminum Connection Head with 1/2-in. Entries		Y	Y	Y	Y		★
Expanded								
C	Polypropylene Connection Head		N	N	N	N		
G	Rosemount SST Connection Head with 1/2-in. Entries		Y	Y	Y	Y		
Sensor Type (single element -50 to 400 °C (-58 to 752 °F))								
Standard								**Standard**
11	General-purpose style							★
21	Spring-loaded style							★
Expanded								
31(1)(2)	Bayonet spring-loaded style (available in (X) lengths of 1 to 21-in., increments of 1-in.)							
Extension Type								
Standard								**Standard**
A(3)	Nipple Coupling							★
C(3)	Nipple Union							★
N	None							★
Extension Length (E)								
Standard								**Standard**
00	0.0 in.							★
30	3.0 in.							★
60	6.0 in.							★
Thermowell Material								
Standard								**Standard**
A	Type 316 SST(4)							★
B	Type 304 SST							★
C	Carbon Steel							★
D	316L SST							★
E	304L SST							★
Expanded								
F	Alloy 20							
G	Alloy 400							
H	Alloy 600							
J	Alloy C-276							
L	Alloy B							
M	304 SST with PTFE coating							
P	Chrome Molybdenum F22							
R	Nickel 200							
T	Titanium							
U(5)	316 SST with Tantalum Sheath							
V	310 SST							
W	321 SST							
Z	Chrome Molybdenum F11							

Table 2. Series 68 RTD Sensor Assemblies WITH Thermowell

★ The Standard offering represents the most common options. The starred options (★) should be selected for best delivery. The Expanded offering is subject to additional delivery lead time.

Sensor/Immersion Length (U[6] length in inches)		(L) Length in inches	(T[7]) Length in inches	
Standard				**Standard**
015	1.5-in.	4.0-in.	1.0-in.	★
020	2.0-in.	4.0-in.	0.5-in.	★
025	2.5-in.	4.0-in.	0.0-in.	★
030	3.0-in.	6.0-in.	1.5-in.	★
035	3.5-in.	6.0-in.	1.0-in.	★
040	4.0-in.	6.0-in.	0.5-in.	★
045	4.5-in.	6.0-in.	0.0-in.	★
050	5.0-in.	9.0-in.	2.5-in.	★
055	5.5-in.	9.0-in.	2.0-in.	★
060	6.0-in.	9.0-in.	1.5-in.	★
065	6.5-in.	9.0-in.	1.0-in.	★
070	7.0-in.	9.0-in.	0.5-in.	★
075	7.5-in.	9.0-in.	0.0-in.	★
080	8.0-in.	12.0-in.	2.5-in.	★
085	8.5-in.	12.0-in.	2.0-in.	★
090	9.0-in.	12.0	1.5-in.	★
095	9.5-in.	12.0-in.	1.0-in.	★
100	10.0-in.	12.0-in.	0.5-in.	★
105	10.5-in.	12.0-in.	0.0-in.	★
110	11.0-in.	15.0-in.	2.5-in.	★
115	11.5-in.	15.0-in.	2.0-in.	★
120	12.0-in.	15.0-in.	1.5-in.	★
125	12.5-in.	15.0-in.	1.0-in.	★
130	13.0-in.	15.0-in.	0.5-in.	★
135	13.5-in.	15.0-in.	0.0-in.	★
140	14.0-in.	18.0-in.	2.5-in.	★
145	14.5-in.	18.0-in.	2.0-in.	★
150	15.0-in.	18.0-in.	1.5-in.	★
155	15.5-in.	18.0-in.	1.0-in.	★
160	16.0-in.	18.0-in.	0.5-in.	★
165	16.5-in.	18.0-in.	0.0-in.	★
170	17.0-in.	21.0-in.	2.5-in.	★
175	17.5-in.	21.0-in.	2.0-in.	★
180	18.0-in.	21.0-in.	1.5-in.	★
185	18.5-in.	21.0-in.	1.0-in.	★
190	19.0-in.	21.0-in.	0.5-in.	★
195	19.5-in.	21.0-in.	0.0-in.	★
200	20.0-in.	24.0-in.	2.5-in.	★
205	20.5-in.	24.0-in.	2.0-in.	★
210	21.0-in.	24.0-in.	1.5-in.	★
215	21.5-in.	24.0-in.	1.0-in.	★
220	22.0-in.	24.0-in.	0.5-in.	★
225	22.5-in.	24.0-in.	0.0-in.	★
230	23.0-in.	27.0-in.	2.5-in.	★
240	24.0-in.	27.0-in.	1.5-in.	★
250	25.0-in.	27.0-in.	0.5-in.	★
260	26.0-in.	30.0-in.	2.5-in.	★
270	27.0-in.	30.0-in.	1.5-in.	★
280	28.0-in.	30.0-in.	0.5-in.	★

Table 2. Series 68 RTD Sensor Assemblies WITH Thermowell

★ The Standard offering represents the most common options. The starred options (★) should be selected for best delivery.
The Expanded offering is subject to additional delivery lead time.

Standard				**Standard**
290	29.0-in.	33.0-in.	2.5-in.	★
300	30.0-in.	33.0-in.	1.5-in.	★
310	31.0-in.	33.0-in.	0.5-in.	★
320	32.0-in.	36.0-in.	2.5-in.	★
330	33.0-in.	36.0-in.	1.5-in.	★
340	34.0-in.	36.0-in.	0.5-in.	★
350	35.0-in.	39.0-in.	2.5-in.	★
360	36.0-in.	39.0-in.	1.5-in.	★
370	37.0-in.	39.0-in.	0.5-in.	★
380	38.0-in.	42.0-in.	2.5-in.	★
390	39.0-in.	42.0-in.	1.5-in.	★
400	40.0-in.	42.0-in.	0.5-in.	★
410	41.0-in.	45.0-in.	2.5-in.	★
420	42.0-in.	45.0-in.	1.5-in.	★
430	43.0-in.	45.0-in.	0.5-in.	★
440	44.0-in.	48.0-in.	2.5-in.	★
450	45.0-in.	48.0-in.	1.5-in.	★
460	46.0-in.	48.0-in.	0.5-in.	★
470	47.0-in.	51.0-in.	2.5-in.	★
480	48.0-in.	51.0-in.	1.5-in.	★

Thermowell Style		**Mounting**	**Stem**	
Standard				**Standard**
T20(4)	Threaded	1/2-14 ANPT	Stepped	★
T22(4)(12)	Threaded	3/4-14 ANPT	Stepped	★
T24(4)(12)	Threaded	1-11.5 ANPT	Stepped	★
T26(12)	Threaded	3/4-14 ANPT	Tapered	★
T28(12)	Threaded	1-11.5 ANPT	Tapered	★
T30(12)	Threaded	1 1/2-11 ANPT	Tapered	★
T32(12)	Threaded	1/2-14 ANPT	Straight	★
T34(12)(13)	Threaded	3/4-14 ANPT	Straight	★
T36(12)(13)	Threaded	1-11.5 ANPT	Straight	★
T38(12)(13)	Threaded	3/4-14 ANPT	Straight	★
T44(12)	Threaded	1/2-14 ANPT	Tapered	★
W38	Welded	3/4-in. pipe	Stepped	★
W40	Welded	1-in. pipe	Stepped	★
W42	Welded	3/4-in. pipe	Tapered	★
W44	Welded	1-in. pipe	Tapered	★
W46	Welded	1 1/4-in. pipe	Tapered	★
W48(12)	Welded	3/4-in. pipe	Straight	★
W50(12)	Welded	1-in. pipe	Straight	★
F10(12)	Flanged	2-in., Class 150	Straight	★
F12(12)	Flanged	3-in., Class 150	Straight	★
F52(8)	Flanged	1-in., Class 150	Stepped	★
F54	Flanged	1 1/2-in., Class 150	Stepped	★
F56	Flanged	2-in., Class 150	Stepped	★
F58(9)	Flanged	1-in., Class 150	Tapered	★
F60	Flanged	1 1/2-in., Class 150	Tapered	★
F62	Flanged	2-in. Class 150	Tapered	★
F64(8)(12)	Flanged	1-in., Class 150	Straight	★
F66(12)	Flanged	1 1/2-in., Class 150	Straight	★
F70	Flanged	1-in., Class 300	Stepped	★

Table 2. Series 68 RTD Sensor Assemblies WITH Thermowell

★ The Standard offering represents the most common options. The starred options (★) should be selected for best delivery. The Expanded offering is subject to additional delivery lead time.

Standard				**Standard**
F72	Flanged	1 1/2-in., Class 300	Stepped	★
F74	Flanged	2-in., Class 300	Stepped	★
F76(9)	Flanged	1-in., Class 300	Tapered	★
F78	Flanged	1 1/2-in., Class 300	Tapered	★
F80	Flanged	2-in., Class 300	Tapered	★
F82(8)(12)	Flanged	1-in., Class 300	Straight	★
F84(12)	Flanged	1 1/2-in., Class 300	Straight	★
F86(12)	Flanged	2-in., Class 300	Straight	★
F88(10)	Flanged	1-in., Class 600	Stepped	★
F90(10)	Flanged	1 1/2-in., Class 600	Stepped	★
F92(10)	Flanged	2-in., Class 600	Stepped	★
F94(9)(10)	Flanged	1-in., Class 600	Tapered	★
F96(10)	Flanged	1 1/2-in., Class 600	Tapered	★
F98(10)	Flanged	2-in., Class 600	Tapered	★
F02(8)(10)(12)	Flanged	1-in., Class 600	Straight	★
F04(10)(12)	Flanged	1 1/2-in., Class 600	Straight	★
F06(10)(12)	Flanged	2-in., Class 600	Straight	★
F16(10)	Flanged	1 1/2-in., Class 900	Tapered	★
F34(10)	Flanged	1 1/2-in., Class 1500	Tapered	★
F24(10)	Flanged	2-in., Class 1500	Tapered	★
F08(10)	Flanged	1 1/2-in., Class 2500	Tapered	★
Q02(11)	Sanitary, Tri-Clamp	1-in., Tri-Clamp	Stepped	★
Q04(11)	Sanitary, Tri-Clamp	1 1/2-in., Tri-Clamp	Stepped	★
Q06(11)	Sanitary, Tri-Clamp	2-in., Tri-Clamp	Stepped	★
Q08(11)	Sanitary, Tri-Clamp	3-in., Tri-Clamp	Stepped	★
Q20(11)	Sanitary, Tri-Clamp	3/4-in., Tri-Clamp	Straight	★
Q22(11)	Sanitary, Tri-Clamp	1-in., Tri-Clamp	Straight	★
Q24(11)	Sanitary, Tri-Clamp	1 1/2-in., Tri-Clamp	Straight	★
Q26(11)	Sanitary, Tri-Clamp	2-in., Tri-Clamp	Straight	★
Q28(11)	Sanitary, Tri-Clamp	3-in., Tri-Clamp	Straight	★

Options (Include with selected model number)

Product Certifications		
Standard		**Standard**
E5	FM Explosion-proof approval (See Figure 24)	★
E6	CSA Explosion-proof approval (See Figure 25)	★
E7(12)	IECEx Flameproof approval (See Figure 28)	★
Callendar-Van Dusen Constants		
Standard		**Standard**
V1-V7	V-Callendar-van Dusen Constants (V4 not available with series 68 sensors)	★
Calibration Schedule		
Standard		**Standard**
X8	Customer-Specified Temperature Calibration	★
X9	Customer-Specified Single Temperature Point Calibration	★
Calibration Certification		
Standard		**Standard**
Q4	Calibration Certification, Customer-Specified Temperature	★
Mounting Adapters		
Standard		**Standard**
M5-M7	Mounting adapter; Sensor Compression Fitting: M5= 1/8-27 NPT, M6 = 1/4-18 NPT, M7 = 1/2-14 NPT	★

Table 2. Series 68 RTD Sensor Assemblies WITH Thermowell

★ The Standard offering represents the most common options. The starred options (★) should be selected for best delivery. The Expanded offering is subject to additional delivery lead time.

A Leadkit		
Standard		**Standard**
A1-A8	Twisted lead wire extension: A1 = 1.5 ft, A2 = 3.0 ft, A3 = 6.0 ft, A4 = 12 ft, A5 = 24 ft, A6 = 50 ft, A7 = 75 ft, A8 = 100 ft	★
B Leadkit		
Standard		**Standard**
B1-B8(1)	Shielded cable lead wire extension: B1 = 1.5 ft, B2 = 3.0 ft, B3 = 6.0 ft, B4 = 12 ft, B5 = 24 ft, B6 = 50 ft, B7 = 75 ft, B8 = 100 ft	★
C Leadkit		
Standard		**Standard**
C1-C8(1)	Armored cable lead wire extension: C1 = 1.5 ft, C2 = 3.0 ft, C3 = 6.0 ft, C4 = 12 ft, C5 = 24 ft, C6 = 50 ft, C7 = 75 ft, C8 = 100 ft	★
D Leadkit		
Standard		**Standard**
D1-D8(1)	Armored cable lead wire extensions with electrical plug: D1 = 1.5 ft, D2 = 3.0 ft, D3 = 6.0 ft, D4 = 12 ft, D5 = 24 ft, D6 = 50 ft, D7 = 75 ft, D8 = 100 ft	★
L Leadkit		
Standard		**Standard**
L1-L8	Armored cable mating plugs with lead wire extension: L1 = 1.5 ft, L2 = 3.0 ft, L3 = 6.0 ft, L4 = 12 ft, L5 = 24 ft, L6 = 50 ft, L7 = 75 ft, L8 = 100 ft	★
F Leadkit		
Standard		**Standard**
F1(1)	4-pin bayonet connector	★
H Leadkit		
Standard		**Standard**
H1-H8	4-pin connector mating plugs with lead wire extension: H1 = 1.5 ft, H2 = 3.0 ft, H3 = 6.0 ft, H4 = 12 ft, H5 = 24 ft, H6 = 50 ft, H7 = 75 ft, H8 = 100 ft	★
J Leadkit		
Standard		**Standard**
J1	Moisture-proof seal assembly for armored cables	★
Special External Pressure Test		
Standard		**Standard**
R01	Special External Pressure Test	★
Material Certification		
Standard		**Standard**
Q8	Material Certification	★
Surface Finish Certification		
Standard		**Standard**
Q16	Surface Finish Certification	★
Dye Penetration Test		
Standard		**Standard**
R03	Dye Penetration Test	★
Thermowell Special Cleaning		
Standard		**Standard**
R04	Thermowell Special Cleaning	★
NACE Approval		
Standard		**Standard**
R05	NACE Approval	★
SST Plug and Chain		
Standard		**Standard**
R06	Stainless steel plug and chain	★
Full Penetration Weld		
Standard		**Standard**
R07(13)	Full penetration weld	★
Thermowell Concentric Serrations		
Standard		**Standard**
R09(13)(14)	Concentric serrations of thermowell flange face	★

Table 2. Series 68 RTD Sensor Assemblies WITH Thermowell

★ The Standard offering represents the most common options. The starred options (★) should be selected for best delivery.
The Expanded offering is subject to additional delivery lead time.

Flat Faced Flange		
Standard		**Standard**
R10 (13)(14)	Flat Faced Flange	★
Vent Hole		
Standard		**Standard**
R11	Vent Hole	★
Thermowell Xray		
Standard		**Standard**
R12	Thermowell Xray	★
Special Surface Finish		
Standard		**Standard**
R14	Special Surface Finish (12 Ra Maximum “U” length = 22.5-in.)	★
Ring Joint Flange		
Standard		**Standard**
R16(13)(14)	Ring joint flange (Not available with 0-in. (T) length)	★
Electropolish		
Standard		**Standard**
R20	Electropolish	★
Wake Frequency		
Standard		**Standard**
R21	Wake Frequency-Thermowell Strength Calculation	★
Internal Pressure Test		
Standard		**Standard**
R22	Internal pressure test	★
Brass Plug & Chain		
Standard		**Standard**
R23	Brass plug & chain	★
Canadian Registration No.		
Expanded		
R24	CRN Marking for British Columbia	
R25	CRN Marking for Alberta	
R26	CRN Marking for Saskatchewan	
R27	CRN Marking for Manitoba	
R28	CRN Marking for Ontario	
R29	CRN Marking for Quebec	
R30	CRN Marking for New Brunswick	
R31	CRN Marking for Nova Scotia	
R32	CRN Marking for Prince Edward Island	
R33	CRN Marking for Yukon Territory	
R34	CRN Marking for Northwest Territory	
R35	CRN Marking for Nunavut	
R36	CRN Marking for Newfoundland and Labrador	
Twell From Hex Stock		
Expanded		
R37	Thermowell from Hex stock	
Assemble to Options		
Standard		**Standard**
XA(15)	Assemble connection head or transmitter to a sensor assembly	★

(1) Not available with Sensor Lead Wire Termination codes R, P, or W.

(2) Not available with option codes E1, E5, E6, and E7.

(3) Codes A and C must be used with an extension length. Additional non-standard (E) lengths are available in 1/2-in. increments from 2.5 to 9-in.

(4) Standard configuration with best delivery.

(5) Available only with straight stem thermowells.

(6) Thermowells with an overall length (“U” + “T” + 1.75-in.) of 36-in. or less are machined from solid barstock. Thermowells with an overall length larger than 42-in. will be constructed using a welded 3-piece design and are available only with a stepped stem style.

(7) For additional (T) lengths, see Table 15 on page 40.

(8) F52, F64, F82, and F02 are not compatible with 1" Sch. XXS pipe.

(9) F58, F76, and F94 may not be compatible with 1" Sch. pipe and are not compatible with 1" Sch. 80, 160 or XXS pipe.

(10) F88 to F08 cannot be used with 0-in. (T) length. F08 cannot be used with 0- or 1/2-in. (T) length)

(11) Limited to 24" immersion length and 316 or 304 SST materials only.

(12) IECEx flame-proof approval is only applicable if installed with a Rosemount 248, 644, or 3144P transmitter.

(13) Available on flanged thermowells only.

(14) Only one flange face option allowed.

(15) If ordering option code XA with a transmitter, specify the same option on the transmitter model code.

Table 3. Ordering Example

Typical Model Number	Model	Lead Wire Termination	Sensor Type	Extension Type	Extension Length	Material Code	Immersion Length	Mounting Style	Additional Options
	0068	N	21	A	30	A	075	T22	E5

Rosemount 78 Sensor and Thermowell



The Rosemount 78 Sensor and Thermowell have designs that provide flexible and reliable temperature measurements in process environments.

Features include:

- Industry-standard Pt-100 RTD
- Single Element High Temperature RTD Dual Element RTD
- Variety of enclosure and connection head options
- Global hazardous-location approvals (Option Codes E5, E6, E7)
- Calibration services to give you insight to sensor performance (Option Codes V1-V8, X8, X9)
- Calibration certification documentation to accompany sensor (Option Code Q4)
- Assemble to Transmitter option (Option Code XA)

Table 4. Series 78 RTD Sensor Assemblies WITHOUT Thermowell

★ The Standard offering represents the most common options. The starred options (★) should be selected for best delivery. The Expanded offering is subject to additional delivery lead time.

Model	Product Description	Available Safety Approvals					
0078	Platinum Temperature Sensor WITHOUT Thermowell		FM	ATEX	CSA	IECEx	
Sensor Lead Wire Termination							
Standard							**Standard**
R	Aluminum Connection Head, Six Terminals, Flat Cover, Unpainted		Y	Y	Y	N	★
T	Aluminum Connection Head, Six Terminals, Extended Cover, Unpainted		Y	Y	Y	N	★
P	Aluminum Connection Head, Six Terminals, Flat Cover, Painted		Y	Y	Y	N	★
L	Aluminum Connection Head, Six Terminals, Extended Cover, Painted		Y	Y	Y	N	★
N	Sensor only with 6-in. PTFE-insulated, 22-gauge lead wires		Y	Y	Y	N	★
D	Rosemount Aluminum Connection head		Y	Y	Y	Y	★
Expanded							
C	Polypropylene Connection Head		N	N	N	N	
G	Rosemount SST Connection Head with 1/2 in. Entries		Y	Y	Y	Y	
Sensor Type		**Range**					
Single Element Temperature Sensors		**-200 to 500 °C (-328 to 932 °F)**					
Standard							**Standard**
01(1)(2)	Capsule style						★
11	General-purpose style						★
21(3)	Spring-loaded style						★
Expanded							
31(4)	Bayonet spring-loaded style (available in (X) lengths of 1 to 21-in, increments of 1-in.)						
Single Element High Temperature Sensors		**0 to 600 °C (32 to 1112 °F)**					
Standard							**Standard**
03(1)	Capsule style (available in (X) lengths of 3 to 48-in, increments of 1-in.)						★
13	General-purpose style (available in (X) lengths of 3 to 48-in, increments of 1/2-in.)						★
23(3)	Spring-loaded style (available in (X) lengths of 3 to 48-in, increments of 1/2-in.)						★
Expanded							
33(4)	Bayonet spring-loaded style (available in (X) lengths of 3 to 21-in, increments of 1-in.)						

Table 4. Series 78 RTD Sensor Assemblies WITHOUT Thermowell

★ The Standard offering represents the most common options. The starred options (★) should be selected for best delivery.
The Expanded offering is subject to additional delivery lead time.

Dual-element Temperature Sensors			**-200 to 500 °C (-328 to 932 °F)**	
Standard				**Standard**
05[1]	Capsule style			★
15	General-purpose style			★
25[3]	Spring-loaded style			★
Expanded				
35[4]	Bayonet spring-loaded style (available in (X) lengths of 1 to 21-in, increments of 1-in.)			
Extension Type		**Material**		
Standard				**Standard**
A[5]	Nipple Coupling	SST		★
C[5]	Nipple Union	SST		★
N	None (Use with extension length option code 00)			★
Extension Length (E)				
Standard				**Standard**
00	0.0 in.			★
30	3.0 in.			★
60	6.0 in.			★
Thermowell Material				
Standard				**Standard**
N	No thermowell required			★
Sensor/ Immersion Length (U length in inches)				
Standard				**Standard**
010	1.0-in.			★
015	1.5-in.			★
020	2.0-in.			★
025	2.5-in.			★
030	3.0-in.			★
035	3.5-in.			★
040	4.0-in.			★
045	4.5-in.			★
050	5.0-in.			★
055	5.5-in.			★
060	6.0-in.			★
065	6.5-in.			★
070	7.0-in.			★
075	7.5-in.			★
080	8.0-in.			★
085	8.5-in.			★
090	9.0-in.			★
095	9.5-in.			★
100	10.0-in.			★
105	10.5-in.			★
110	11.0-in.			★
115	11.5-in.			★
120	12.0-in.			★
125	12.5-in.			★
130	13.0-in.			★
135	13.5-in.			★
140	14.0-in.			★
145	14.5-in.			★
150	15.0-in.			★

Table 4. Series 78 RTD Sensor Assemblies WITHOUT Thermowell

★ The Standard offering represents the most common options. The starred options (★) should be selected for best delivery. The Expanded offering is subject to additional delivery lead time.

Standard		Standard
155	15.5-in.	★
160	16.0-in.	★
165	16.5-in.	★
170	17.0-in.	★
175	17.5-in.	★
180	18.0-in.	★
185	18.5-in.	★
190	19.0-in.	★
195	19.5-in.	★
200	20.0-in.	★
205	20.5-in.	★
210	21.0-in.	★
215	21.5-in.	★
220	22.0-in.	★
225	22.5-in.	★
230	23.0-in.	★
235	23.5-in.	★
240	24.0-in.	★
245	24.5-in.	★
250	25.0-in.	★
260	26.0-in.	★
270	27.0-in.	★
280	28.0-in.	★
290	29.0-in.	★
300	30.0-in.	★
310	31.0-in.	★
320	32.0-in.	★
330	33.0-in.	★
340	34.0-in.	★
350	35.0-in.	★
360	36.0-in.	★
370	37.0-in.	★
380	38.0-in.	★
390	39.0-in.	★
400	40.0-in.	★
410	41.0-in.	★
420	42.0-in.	★
430	43.0-in.	★
440	44.0-in.	★
450	45.0-in.	★
460	46.0-in.	★
470	47.0-in.	★
480[(6)]	48.0-in.	★

Options (Include with selected model number)

Sensor		
Expanded		
A[(7)]	IEC – 751 Class A Sensor	
Approval Options		
Standard		**Standard**
E5	FM Explosion-proof approval (See Figure 24)	★
E6	CSA Explosion-proof approval (See Figure 25)	★

Table 4. Series 78 RTD Sensor Assemblies WITHOUT Thermowell

★ The Standard offering represents the most common options. The starred options (★) should be selected for best delivery. The Expanded offering is subject to additional delivery lead time.

Standard		**Standard**
E7[8]	IECEx Flameproof approval (See Figure 28)	★
E1	KEMA/CENELEC Flameproof approval	★
Callendar-Van Dusen Constants		
Standard		**Standard**
V1-V7	V-Callendar-van Dusen Constants	★
Calibration Schedule		
Standard		**Standard**
X8	Customer-Specified Temperature Range Calibration	★
X9	Customer-Specified Single Temperature Point Calibration	★
Calibration Certification		
Standard		**Standard**
Q4	Calibration Certification, Customer-Specified Temperature	★
Mounting Adapters		
Standard		**Standard**
M5-M7	Mounting adapter; Sensor Compression Fitting: M5= 1/8-27 NPT, M6 = 1/4-18 NPT, M7 = 1/2-14 NPT	★
A Leadkit		
Standard		**Standard**
A1-A8	Twisted lead wire extension: A1 = 1.5 ft, A2 = 3.0 ft, A3 = 6.0 ft, A4 = 12 ft, A5 = 24 ft, A6 = 50 ft, A7 = 75 ft, A8 = 100 ft	★
B Leadkit		
Standard		**Standard**
B1-B8[9]	Shielded cable lead wire extension: B1 = 1.5 ft, B2 = 3.0 ft, B3 = 6.0 ft, B4 = 12 ft, B5 = 24 ft, B6 = 50 ft, B7 = 75 ft, B8 = 100 ft	★
C Leadkit		
Standard		**Standard**
C1-C8[9]	Armored cable lead wire extension: C1 = 1.5 ft, C2 = 3.0 ft, C3 = 6.0 ft, C4 = 12 ft, C5 = 24 ft, C6 = 50 ft, C7 = 75 ft, C8 = 100 ft	★
D Leadkit		
Standard		**Standard**
D1-D8[9]	Armored cable lead wire extensions with electrical plug: D1 = 1.5 ft, D2 = 3.0 ft, D3 = 6.0 ft, D4 = 12 ft, D5 = 24 ft, D6 = 50 ft, D7 = 75 ft, D8 = 100 ft	★
L Leadkit		
Standard		**Standard**
L1-L8	Armored cable mating plugs with lead wire extension: L1 = 1.5 ft, L2 = 3.0 ft, L3 = 6.0 ft, L4 = 12 ft, L5 = 24 ft, L6 = 50 ft, L7 = 75 ft, L8 = 100 ft	★
F Leadkit		
Standard		**Standard**
F1[9]	4-pin bayonet connector	★
H Leadkit		
Standard		**Standard**
H1-H8	4-pin connector mating plugs with lead wire extension: H1 = 1.5 ft, H2 = 3.0 ft, H3 = 6.0 ft, H4 = 12 ft, H5 = 24 ft, H6 = 50 ft, H7 = 75 ft, H8 = 100 ft	★
J Leadkit		
Standard		**Standard**
J1	Moisture-proof seal assembly for armored cables	★
Assemble to Options		
Standard		**Standard**
XA[10]	Assemble connection head or transmitter to a sensor assembly (PTFE paste where appropriate, fully wired.)	★

(1) Capsule style available in 1-in. increments only. See "Mounting Adapters for Series 58, 68, 78, and 183" on page 72.

(2) Must be used with Sensor Lead Wire Termination code N and is not available with assembly option XA or with approval option codes E1, E5, E6, or E7.

(3) Spring loaded sensors must be installed in a thermowell assembly to meet the requirements of explosion-proof approval option code E6.

(4) This option is not available with Sensor Lead Wire Termination codes R, P, or C or approval code E1, E6, and E7.

(5) Codes A and C must be used with an extension length. Additional non-standard (E) lengths are available in 1/2-in. increments from 2.5 to 9-in.

(6) Additional lengths are available up to 68-in., increments of 1-in.

(7) The IEC 751 Class A option is not available with high-temperature sensors.

(8) IECEx Flameproof approvals only applicable if installed with a Rosemount 248, 644, or 3144P transmitter.

(9) Requires Sensor lead wire termination code N

(10) If ordering option code XA with a transmitter, specify the same option on the transmitter model code.

Table 5. Ordering Example

	Model	Lead Wire Termination	Sensor Type	Extension Type	Extension Length	Thermowell Material	Immersion Length	Additional Options
Typical Model Number	0078	N	21	N	00	N	045	E5

Table 6. Series 78 RTD Sensor Assemblies WITH Thermowell

★ The Standard offering represents the most common options. The starred options (★) should be selected for best delivery.
The Expanded offering is subject to additional delivery lead time.

Model	Product Description	Available Safety Approvals					
		FM	ATEX	CSA	IECEx		
0078	Platinum Temperature Sensor WITH Thermowell						
Sensor Lead Wire Termination							
Standard							**Standard**
R	Aluminum Connection Head, Six Terminals, Flat Cover, Unpainted	Y	Y	Y	N		★
T	Aluminum Connection Head, Six Terminals, Extended Cover, Unpainted	Y	Y	Y	N		★
P	Aluminum Connection Head, Six Terminals, Flat Cover, Painted	Y	Y	Y	N		★
L	Aluminum Connection Head, Six Terminals, Extended Cover, Painted	Y	Y	Y	N		★
N	Sensor only with 6-in. PTFE-insulated, 22-gauge lead wires	Y	Y	Y	N		★
D	Rosemount Aluminum Connection head with 1/2- in. Entries	Y	Y	Y	Y		★
Expanded							
C	Polypropylene Connection Head	N	N	N	N		
G	Rosemount SST Connection Head with 1/2- in. Entries	Y	Y	Y	Y		
Sensor Type		**Temperature**					
Single Element Temperature Sensors		**-200 to 500 °C (-328 to 932 °F)**					
Standard							**Standard**
11	General-purpose style						★
21	Spring-loaded style						★
Expanded							
31(1)(2)	Bayonet spring-loaded style (available in (X) lengths over 21-in.)						
Single Element High Temperature Sensors		**0 to 500 °C (32 to 1112 °F)**					
Standard							**Standard**
13	General-purpose style (available in (X) lengths of 3 to 24-in., increments of 1/2-in.)						★
23	Spring-loaded style (available in (X) lengths of 3 to 24-in., increments of 1/2-in.)						★
Expanded							
33(1)(2)	Bayonet spring-loaded style (available in (X) lengths of 3 to 21-in., increments of 1-in.)						
Dual-element Temperature Sensors		**-200 to 500 °C (-328 to 932 °F)**					
Standard							**Standard**
15	General-purpose style						★
25	Spring-loaded style						★
Expanded							
35(1)(2)	Bayonet spring-loaded style (available in (X) lengths of 1 to 21-in., increments of 1-in.)						

Extension Type		Material	
Standard			**Standard**
A(3)	Nipple Coupling	SST	★
C(3)	Nipple Union	SST	★
N	None (Use with extension length option code 00)		★
Extension Length (E)			
Standard			**Standard**
00	0.0 in.		★
30	3.0 in.		★
60	6.0 in.		★
Thermowell Material			
Standard			**Standard**
A	Type 316 SST(4)		★
B	Type 304 SST		★
C	Carbon Steel		★
D	316L SST		★
E	304L SST		★

Table 6. Series 78 RTD Sensor Assemblies WITH Thermowell

★ The Standard offering represents the most common options. The starred options (★) should be selected for best delivery. The Expanded offering is subject to additional delivery lead time.

Expanded				
F	Alloy 20			
G	Alloy 400			
H	Alloy 600			
J	Alloy C-276			
L	Alloy B			
M	304 SST with PTFE coating			
P	Chrome Molybdenum F22			
R	Nickel 200			
T	Titanium			
U[5]	316 SST with Tantalum Sheath			
V	310 SST			
W	321 SST			
Z	Chrome Molybdenum F11			
Sensor/Immersion Length (U) length in inches		**(L) Length in inches**	**(T) Length in inches**	
Standard				**Standard**
015[6]	1.5-in.	4.0-in.	1.0-in.	★
020[6]	2.0-in.	4.0-in.	0.5-in.	★
025[6]	2.5-in.	4.0-in.	0.0-in.	★
030	3.0-in.	6.0-in.	1.5-in.	★
035	3.5-in.	6.0-in.	1.0-in.	★
040	4.0-in.	6.0-in.	0.5-in.	★
045	4.5-in.	6.0-in.	0.0-in.	★
050	5.0-in.	9.0-in.	2.5-in.	★
055	5.5-in.	9.0-in.	2.0-in.	★
060	6.0-in.	9.0-in.	1.5-in.	★
065	6.5-in.	9.0-in.	1.0-in.	★
070	7.0-in.	9.0-in.	0.5-in.	★
075	7.5-in.	9.0-in.	0.0-in.	★
080	8.0-in.	12.0-in.	2.5-in.	★
085	8.5-in.	12.0-in.	2.0-in.	★
090	9.0-in.	12.0-in.	1.5-in.	★
095	9.5-in.	12.0-in.	1.0-in.	★
100	10.0-in.	12.0-in.	0.5-in.	★
105	10.5-in.	12.0-in.	0.0-in.	★
110	11.0-in.	15.0-in.	2.5-in.	★
115	11.5-in.	15.0-in.	2.0-in.	★
120	12.0-in.	15.0-in.	1.5-in.	★
125	12.5-in.	15.0-in.	1.0-in.	★
130	13.0-in.	15.0-in.	0.5-in.	★
135	13.5-in.	15.0-in.	0.0-in.	★
140	14.0-in.	18.0-in.	2.5-in.	★
145	14.5-in.	18.0-in.	2.0-in.	★
150	15.0-in.	18.0-in.	1.5-in.	★
155	15.5-in.	18.0-in.	1.0-in.	★
160	16.0-in.	18.0-in.	0.5-in.	★
165	16.5-in.	18.0-in.	0.0-in.	★
170	17.0-in.	21.0-in.	2.5-in.	★
175	17.5-in.	21.0-in.	2.0-in.	★
180	18.0-in.	21.0-in.	1.5-in.	★
185	18.5-in.	21.0-in.	1.0-in.	★

Table 6. Series 78 RTD Sensor Assemblies WITH Thermowell

★ The Standard offering represents the most common options. The starred options (★) should be selected for best delivery.
The Expanded offering is subject to additional delivery lead time.

Standard				**Standard**
190	19.0-in.	21.0-in.	0.5-in.	★
195	19.5-in.	21.0-in.	0.0-in.	★
200	20.0-in.	24.0-in.	2.5-in.	★
205	20.5-in.	24.0-in.	2.0-in.	★
210	21.0-in.	24.0-in.	1.5-in.	★
215	21.5-in.	24.0-in.	1.0-in.	★
220	22.0-in.	24.0-in.	0.5-in.	★
225	22.5-in.	24.0-in.	0.0-in.	★
230	23.0-in.	27.0-in.	2.5-in.	★
240	24.0-in.	27.0-in.	1.5-in.	★
250	25.0-in.	27.0-in.	0.5-in.	★
260	26.0-in.	30.0-in.	2.5-in.	★
270	27.0-in.	30.0-in.	1.5-in.	★
280	28.0-in.	30.0-in.	0.5-in.	★
290	29.0-in.	33.0-in.	2.5-in.	★
300	30.0-in.	33.0-in.	1.5-in.	★
310	31.0-in.	33.0-in.	0.5-in.	★
320	32.0-in.	36.0-in.	2.5-in.	★
330	33.0-in.	36.0-in.	1.5-in.	★
340	34.0-in.	36.0-in.	0.5-in.	★
350	35.0-in.	39.0-in.	2.5-in.	★
360	36.0-in.	39.0-in.	1.5-in.	★
370	37.0-in.	39.0-in.	0.5-in.	★
380	38.0-in.	42.0-in.	2.5-in.	★
390	39.0-in.	42.0-in.	1.5-in.	★
400	40.0-in.	42.0-in.	0.5-in.	★
410	41.0-in.	45.0-in.	2.5-in.	★
420	42.0-in.	45.0-in.	1.5-in.	★
430	43.0-in.	45.0-in.	0.5-in.	★
440	44.0-in.	48.0-in.	2.5-in.	★
450	45.0-in.	48.0-in.	1.5-in.	★
460	46.0-in.	48.0-in.	0.5-in.	★
470	47.0-in.	51.0-in.	2.5-in.	★
480	48.0-in.	51.0-in.	1.5-in.	★
Thermowell Style		**Mounting**	**Stem**	
Standard				**Standard**
T20[4]	Threaded	1/2-14 ANPT	Stepped	★
T22[4]	Threaded	3/4-14 ANPT	Stepped	★
T24[4]	Threaded	1-11.5 ANPT	Stepped	★
T26	Threaded	3/4-14 ANPT	Tapered	★
T28	Threaded	1-11.5 ANPT	Tapered	★
T30	Threaded	1 1/2-11 ANPT	Tapered	★
T32	Threaded	1/2-14 ANPT	Straight	★
T34	Threaded	3/4-14 ANPT	Straight	★
T36	Threaded	1-11.5 ANPT	Straight	★
T38	Threaded	3/4-14 ANPT	Straight	★
T44	Threaded	1/2-14 ANPT	Tapered	★
W38	Welded	3/4-in. pipe	Stepped	★
W40	Welded	1-in. pipe	Stepped	★
W42	Welded	3/4-in. pipe	Tapered	★
W44	Welded	1-in. pipe	Tapered	★

Sensors and Accessories (English)

Table 6. Series 78 RTD Sensor Assemblies WITH Thermowell

★ The Standard offering represents the most common options. The starred options (★) should be selected for best delivery. The Expanded offering is subject to additional delivery lead time.

Standard				**Standard**
W46	Welded	1 1/4-in. pipe	Tapered	★
W48	Welded	3/4-in. pipe	Straight	★
W50	Welded	1-in. pipe	Straight	★
F10	Flanged	2-in., Class 150	Straight	★
F12	Flanged	3-in., Class 150	Straight	★
F52(7)	Flanged	1-in., Class 150	Stepped	★
F54	Flanged	1 1/2-in., Class 150	Stepped	★
F56	Flanged	2-in., Class 150	Stepped	★
F58(8)	Flanged	1-in., Class 150	Tapered	★
F60	Flanged	1 1/2-in., Class 150	Tapered	★
F62	Flanged	2-in. Class 150	Tapered	★
F64(7)	Flanged	1-in., Class 150	Straight	★
F66	Flanged	1 1/2-in., Class 150	Straight	★
F70	Flanged	1-in., Class 300	Stepped	★
F72	Flanged	1 1/2-in., Class 300	Stepped	★
F74	Flanged	2-in., Class 300	Stepped	★
F76(8)	Flanged	1-in., Class 300	Tapered	★
F78	Flanged	1 1/2-in., Class 300	Tapered	★
F80	Flanged	2-in., Class 300	Tapered	★
F82(7)	Flanged	1-in., Class 300	Straight	★
F84	Flanged	1 1/2-in., Class 300	Straight	★
F86	Flanged	2-in., Class 300	Straight	★
F88(9)	Flanged	1-in., Class 600	Stepped	★
F90(9)	Flanged	1 1/2-in., Class 600	Stepped	★
F92(9)	Flanged	2-in., Class 600	Stepped	★
F94(8)(9)	Flanged	1-in., Class 600	Tapered	★
F96(9)	Flanged	1 1/2-in., Class 600	Tapered	★
F98(9)	Flanged	2-in., Class 600	Tapered	★
F02(7)(9)	Flanged	1-in., Class 600	Straight	★
F04(9)	Flanged	1 1/2-in., Class 600	Straight	★
F06(9)	Flanged	2-in., Class 600	Straight	★
F16(9)	Flanged	1 1/2-in., Class 900	Tapered	★
F34(9)	Flanged	1 1/2-in., Class 1500	Tapered	★
F24(9)	Flanged	2-in., Class 1500	Tapered	★
F08(9)	Flanged	1 1/2-in., Class 2500	Tapered	★
Q02(10)	Sanitary, Tri-Clamp	1-in., Tri-Clamp	Stepped	★
Q04(10)	Sanitary, Tri-Clamp	1 1/2-in., Tri-Clamp	Stepped	★
Q06(10)	Sanitary, Tri-Clamp	2-in., Tri-Clamp	Stepped	★
Q08(10)	Sanitary, Tri-Clamp	3-in., Tri-Clamp	Stepped	★
Q20(10)	Sanitary, Tri-Clamp	3/4-in., Tri-Clamp	Straight	★
Q22(10)	Sanitary, Tri-Clamp	1-in., Tri-Clamp	Straight	★
Q24(10)	Sanitary, Tri-Clamp	1 1/2-in., Tri-Clamp	Straight	★
Q26(10)	Sanitary, Tri-Clamp	2-in., Tri-Clamp	Straight	★
Q28(10)	Sanitary, Tri-Clamp	3-in., Tri-Clamp	Straight	★

Options (Include with selected model number)

Sensor		
Expanded		
A(11)	IEC 751 Class A sensor	

Table 6. Series 78 RTD Sensor Assemblies WITH Thermowell

★ The Standard offering represents the most common options. The starred options (★) should be selected for best delivery. The Expanded offering is subject to additional delivery lead time.

Approval Options		
Standard		**Standard**
E5	FM Explosion-proof approval (See Figure 24)	★
E6	CSA Explosion-proof approval (See Figure 25)	★
E7(12)	IECEx Flameproof approval (See Figure 28)	★
E1	KEMA/CENELEC Flameproof approval	★
Callendar-Van Dusen Constant		
Standard		**Standard**
V1-V7	V-Callendar-van Dusen Constants	★
Calibration Schedule		
Standard		**Standard**
X8	Customer-Specified Temperature Range Calibration	★
X9	Customer-Specified Single Temperature Point Calibration	★
Calibration Certification		
Standard		**Standard**
Q4	Calibration Certification, Customer-Specified Temperature	★
Mounting Adapters		
Standard		**Standard**
M5-M7	Mounting adapter; Sensor Compression Fitting: M5= 1/8-27 NPT, M6 = 1/4-18 NPT, M7 = 1/2-14 NPT	★
A Leadkit		
Standard		**Standard**
A1-A8	Twisted lead wire extension: A1 = 1.5 ft, A2 = 3.0 ft, A3 = 6.0 ft, A4 = 12 ft, A5 = 24 ft, A6 = 50 ft, A7 = 75 ft, A8 = 100 ft	★
B Leadkit		
Standard		**Standard**
B1-B8(13)	Shielded cable lead wire extension: B1 = 1.5 ft, B2 = 3.0 ft, B3 = 6.0 ft, B4 = 12 ft, B5 = 24 ft, B6 = 50 ft, B7 = 75 ft, B8 = 100 ft	★
C Leadkit		
Standard		**Standard**
C1-C8(13)	Armored cable lead wire extension: C1 = 1.5 ft, C2 = 3.0 ft, C3 = 6.0 ft, C4 = 12 ft, C5 = 24 ft, C6 = 50 ft, C7 = 75 ft, C8 = 100 ft	★
D Leadkit		
Standard		**Standard**
D1-D8(13)	Armored cable lead wire extensions with electrical plug: D1 = 1.5 ft, D2 = 3.0 ft, D3 = 6.0 ft, D4 = 12 ft, D5 = 24 ft, D6 = 50 ft, D7 = 75 ft, D8 = 100 ft	★
L Leadkit		
Standard		**Standard**
L1-L8	Armored cable mating plugs with lead wire extension: L1 = 1.5 ft, L2 = 3.0 ft, L3 = 6.0 ft, L4 = 12 ft, L5 = 24 ft, L6 = 50 ft, L7 = 75 ft, L8 = 100 ft	★
F Leadkit		
Standard		**Standard**
F1(13)	4-pin bayonet connector	★
H Leadkit		
Standard		**Standard**
H1-H8	4-pin connector mating plugs with lead wire extension: H1 = 1.5 ft, H2 = 3.0 ft, H3 = 6.0 ft, H4 = 12 ft, H5 = 24 ft, H6 = 50 ft,	★
J Leadkit		
Standard		**Standard**
J1	Moisture-proof seal assembly for armored cables	★
Special External Pressure Test		
Standard		**Standard**
R01	Special External Pressure Test	★
Material Certifications		
Standard		**Standard**
Q8	Thermowell material certificate	★
Surface Finish Certification		
Standard		**Standard**
Q16	Surface Finish Certification	★

Table 6. Series 78 RTD Sensor Assemblies WITH Thermowell

★ The Standard offering represents the most common options. The starred options (★) should be selected for best delivery.
The Expanded offering is subject to additional delivery lead time.

Dye Penetration Test		
Standard		**Standard**
R03	Dye Penetration Test	★
Thermowell Special Cleaning		
Standard		**Standard**
R04	Thermowell Special Cleaning	★
NACE Approval		
Standard		**Standard**
R05	NACE Approval	★
SST Plug and Chain		
Standard		**Standard**
R06	SST Plug and Chain	★
Full Penetration Weld		
Standard		**Standard**
R07(14)	Full Penetration Weld	★
Thermowell Concentric Serrations		
Standard		**Standard**
R09(14)(15)	Concentric Serrations of Thermowell Flange Face	★
Flat Faced Flange		
Standard		**Standard**
R10 (14)(15)	Flat Faced Flange	★
Vent Hole		
Standard		**Standard**
R11	Vent Hole	★
Thermowell Xray		
Standard		**Standard**
R12	Thermowell Xray	★
Special Surface Finish		
Standard		**Standard**
R14	Special Surface Finish (12 RA Maximum “U” length = 22.5-in.)	★
Ring Joint Flange		
Standard		**Standard**
R16(14)(15)	Ring Joint Flange (not available with 0-in. (T) length)	★
Electropolish		
Standard		**Standard**
R20	Electropolish	★
Wake Frequency		
Standard		**Standard**
R21	Wake Frequency - Thermowell Strength Calculation	★
Internal Pressure Test		
Standard		**Standard**
R22	Internal Pressure Test	★
Brass Plug & Chain		
Standard		**Standard**
R23	Brass Plug & Chain	★
Canadian Registration No.		
Expanded		
R24	CRN Marking for British Columbia	
R25	CRN Marking for Alberta	
R26	CRN Marking for Saskatchewan	
R27	CRN Marking for Manitoba	
R28	CRN Marking for Ontario	
R29	CRN Marking for Quebec	
R30	CRN Marking for New Brunswick	
R31	CRN Marking for Nova Scotia	

Table 6. Series 78 RTD Sensor Assemblies WITH Thermowell

★ The Standard offering represents the most common options. The starred options (★) should be selected for best delivery.
The Expanded offering is subject to additional delivery lead time.

Expanded		
R32	CRN Marking for Prince Edward Island	
R33	CRN Marking for Yukon Territory	
R34	CRN Marking for Northwest Territory	
R35	CRN Marking for Nunavut	
R36	CRN Marking for Newfoundland and Labrador	
Twell From Hex Stock		
Expanded		
R37	Thermowell From Hex Stock	
Assemble to Option		
Standard		**Standard**
XA(2)(16)	Assemble connection head or transmitter to a sensor assembly (PTFE paste where appropriate, fully wired.)	★

(1) Not available with Sensor Lead Wire Termination codes R, P, or W.

(2) Not available with Approval codes E1, E6, or E7.

(3) Codes A and C must be used with an extension length. Additional non-standard (E) lengths are available in 1/2-in. increments from 2.5 to 9-in.

(4) Standard configuration with best delivery.

(5) Available only with straight stem flanged thermowells.

(6) Straight or Tapered stem only.

(7) F52, F64, F82, and F02 are not compatible with 1" Sch. XXS pipe.

(8) F58, F76, and F94 may not be compatible with 1" Sch. pipe and are not compatible with 1" Sch. 80, 160, or XXS pipe.

(9) F88 to F08 cannot be used with 0-in. (T) length. F08 cannot be used with 0- or 1/2-in. (T) length

(10) Limited to 24" immersion length and 316 or 304 SST materials only.

(11) The IEC 751 Class A option is not available with high-temperature sensors.

(12) IECEx Flameproof approvals only applicable if installed with a Rosemount 248, 644, or 3144 transmitter.

(13) These options are not available with Sensor Lead Wire Termination codes R, P, or W.

(14) Available on flanged thermowells only.

(15) Only one flange face option allowed.

(16) If ordering option code XA with a transmitter, specify the same option on the transmitter model code.

Table 7. Ordering Example

Typical Model Number	Model	Lead Wire Termination	Sensor Type	Extension Type	Extension Length	Material Code	Immersion Length	Mounting Style	Additional Options
	0078	N	21	A	30	A	075	T22	E5

Rosemount 183 Sensor and Thermowell



The Rosemount 183 Sensor and Thermowell have designs that provide flexible and reliable temperature measurements in process environments.

Features include:

- Industry-standard sensor types, including J, K, E, and T thermocouple varieties
- Variety of enclosure and connection head options
- Global hazardous-location approvals (Option Codes E5, E6, E7)
- Assemble to Transmitter option (Option Code XA)

Table 8. Series 183 Thermocouple Sensor Assemblies WITHOUT Thermowell

★ The Standard offering represents the most common options. The starred options (★) should be selected for best delivery.
The Expanded offering is subject to additional delivery lead time.

Model	Product Description	Available Safety Approvals					
		FM	ATEX	CSA	IECEx		
0183	Thermocouple Sensor WITHOUT Thermowell						
Sensor Lead Wire Termination							
Standard							**Standard**
R	Aluminum Connection Head, Six Terminals, Flat Cover, Unpainted	Y	Y	Y	N		★
T	Aluminum Connection Head, Six Terminals, Extended Cover, Unpainted	Y	Y	Y	N		★
P	Aluminum Connection Head, Six Terminals, Flat Cover, Painted	Y	Y	Y	N		★
L	Aluminum Connection Head, Six Terminals, Extended Cover, Painted	Y	Y	Y	N		★
N	Sensor only with 6-in. PTFE-insulated, 20-gauge lead wires	Y	Y	Y	N		★
D	Rosemount Aluminum Connection Head with 1/2-in. Entries	Y	Y	Y	Y		★
Expanded							
C	Polypropylene Connection Head	N	N	N	N		
G	Rosemount SST Connection Head with 1/2-in. Entries	N	N	N	N		

Sensor Type		Junction	
Capsule Sensor(1)(2)			
Standard			**Standard**
01(1)	Single	Grounded	★
02	Dual	Grounded	★
03	Single	Ungrounded	★
04	Dual, Unisolated	Ungrounded	★
05	Dual, Isolated	Ungrounded	★
General Purpose Sensors			
Standard			**Standard**
11	Single	Grounded	★
12	Dual	Grounded	★
13	Single	Ungrounded	★
14	Dual, Unisolated	Ungrounded	★
15	Dual, Isolated	Ungrounded	★
Spring-Loaded Sensors(3)			
Standard			**Standard**
21	Single	Grounded	★
22	Dual	Grounded	★
23	Single	Ungrounded	★
24	Dual, Unisolated	Ungrounded	★
25	Dual, Isolated	Ungrounded	★

Table 8. Series 183 Thermocouple Sensor Assemblies WITHOUT Thermowell

★ The Standard offering represents the most common options. The starred options (★) should be selected for best delivery.
The Expanded offering is subject to additional delivery lead time.

Bayonet Spring-Loaded Sensors[4][5]			★
Expanded			
31	Single	Grounded	
32	Dual	Grounded	
33	Single	Ungrounded	
34	Dual, Unisolated	Ungrounded	
35	Dual, Isolated	Ungrounded	
Thermocouple Type		**Temperature Range**	
Standard			**Standard**
J2	J	0 to 760 °C (32 to 1400 °F)	★
K2	K	0 to 1150 °C (32 to 2102 °F)	★
E2	E	0 to 871 °C (32 to 1600 °F)	★
T2	T	–180 to 371 °C (–292 to 700 °F)	★
Extension Type		**Material**	
Standard			**Standard**
A[6]	Nipple Coupling	SST	★
C[6]	Nipple Union	SST	★
N	None (Use with extension length option code 00)		★
Extension Length (E)			
Standard			**Standard**
00	0.0 in.		★
30	3.0 in.	(X) sensor length = (E) extension length + (L) thermowell length minus 0.25 in. (see Figure 4.)	★
60	6.0 in.		★
Thermowell Material			
Standard			**Standard**
N	No thermowell required		★
Code	**Sensor/Immersion Length (U length in inches)**		
Standard			**Standard**
020	2.0-in.		★
025	2.5-in.		★
030	3.0-in.		★
035	3.5-in.		★
040	4.0-in.		★
045	4.5-in.		★
050	5.0-in.		★
055	5.5-in.		★
060	6.0-in.		★
065	6.5-in.		★
070	7.0-in.		★
075	7.5-in.		★
080	8.0-in.		★
085	8.5-in.		★
090	9.0-in.		★
095	9.5-in.		★
100	10.0-in.		★
105	10.5-in.		★
110	11.0-in.		★
115	11.5-in.		★
120	12.0-in.		★
125	12.5-in.		★
130	13.0-in.		★

Table 8. Series 183 Thermocouple Sensor Assemblies WITHOUT Thermowell

★ The Standard offering represents the most common options. The starred options (★) should be selected for best delivery.
The Expanded offering is subject to additional delivery lead time.

Standard		Standard
135	13.5-in.	★
140	14.0-in.	★
145	14.5-in.	★
150	15.0-in.	★
155	15.5-in.	★
160	16.0-in.	★
165	16.5-in.	★
170	17.0-in.	★
175	17.5-in.	★
180	18.0-in.	★
185	18.5-in.	★
190	19.0-in.	★
195	19.5-in.	★
200	20.0-in.	★
205	20.5-in.	★
210	21.0-in.	★
215	21.5-in.	★
220	22.0-in.	★
225	22.5-in.	★
230	23.0-in.	★
235	23.5-in.	★
240	24.0-in.	★
245	24.5-in.	★
250	25.0-in.	★
260	26.0-in.	★
270	27.0-in.	★
280	28.0-in.	★
290	29.0-in.	★
300	30.0-in.	★
310	31.0-in.	★
320	32.0-in.	★
330	33.0-in.	★
340	34.0-in.	★
350	35.0-in.	★
360	36.0-in.	★
370	37.0-in.	★
380	38.0-in.	★
390	39.0-in.	★
400	40.0-in.	★
410	41.0-in.	★
420	42.0-in.	★
430	43.0-in.	★
440	44.0-in.	★
450	45.0-in.	★
460	46.0-in.	★
470	47.0-in.	★
480	48.0-in.	★

Table 8. Series 183 Thermocouple Sensor Assemblies WITHOUT Thermowell

★ The Standard offering represents the most common options. The starred options (★) should be selected for best delivery. The Expanded offering is subject to additional delivery lead time.

Options (Include with selected model number)

Product Certifications		
Standard		**Standard**
E5	FM Explosion-proof approval (See Figure 24)	★
E6	CSA Explosion-proof approval (See Figure 25)	★
E7(7)	IECEx Flameproof approval (See Figure 28)	★
E1(8)	KEMA/CENELEC Flameproof approval (See Figure 27)	★
Mounting Adapters, Lead Wire Extensions, Connectors, and Seals		
Standard		**Standard**
M5-M7	Mounting adapters	★
Assembly Options		
Standard		**Standard**
XA(9)	Assemble connection head or transmitter to a sensor assembly	★

(1) This option must be used with Sensor Lead Wire Termination code N and is not available with assembly options XA.

(2) Cannot be used with approval option codes E1, E5, E6, or E7. See "Mounting Adapters for Series 58, 68, 78, and 183" on page 72.

(3) Spring-loaded sensors must be installed in a thermowell assembly to meet the requirement option code E6.

(4) This option is not available with explosion-proof approval option code E6.

(5) Bayonet spring-loaded style is available to 45-inches but is not available with Sensor Lead Wire Termination codes R, P, or W.

(6) Codes A and C must be used with an extension length. Additional non-standard (E) lengths are available in 1/2-in. increments from 2.5 to 9-in.

(7) IECEx Flameproof approvals only applicable if installed with a Rosemount 248, 644, or 3144 transmitter.

(8) ATEX Flameproof approval is only applicable if ordered with Sensor Lead Wire Terminator code D, R, P, T, or L (Rosemount connection head) or installed with Rosemount 248, 644, or 3144P transmitters.

(9) If ordering option code XA with a transmitter, specify the same option on the transmitter model code.

Table 9. Ordering Example

Typical Model Number	Model	Lead Wire Termination	Sensor Type	ISA Type	Extension Type	Extension Length	Thermowell Code	Immersion Length	Additional Options
	0183	N	11	J2	N	00	N	045	E5

Table 10. Series 183 Thermocouple Sensor Assemblies WITH Thermowell

★ The Standard offering represents the most common options. The starred options (★) should be selected for best delivery.
The Expanded offering is subject to additional delivery lead time.

Model	Product Description	Available Safety Approvals					
0183	Thermocouple Sensor WITH Thermowell	FM	ATEX	CSA	IECEx		
Sensor Lead Wire Termination							
Standard							**Standard**
R	Aluminum Connection Head, Six Terminals, Flat Cover, Unpainted	Y	Y	Y	N		★
T	Aluminum Connection Head, Six Terminals, Extended Cover, Unpainted	Y	Y	Y	N		★
P	Aluminum Connection Head, Six Terminals, Flat Cover, Painted	Y	Y	Y	N		★
L	Aluminum Connection Head, Six Terminals, Extended Cover, Painted	Y	Y	Y	N		★
N	Sensor only with 6-in. PTFE-insulated, 22-gauge lead wires	Y	Y	Y	N		★
D	Rosemount Aluminum Connection Head with 1/2-in. Entries	Y	Y	Y	Y		★
Expanded							
C	Polypropylene Connection Head	N	N	N	N		
G	Rosemount SST Connection Head with 1/2-in. Entries	N	N	N	N		

Sensor Type		Junction	
General-Purpose Sensors			
Standard			**Standard**
11	Single	Grounded	★
12	Dual	Grounded	★
13	Single	Ungrounded	★
14	Dual, Unisolated	Ungrounded	★
15	Dual, Isolated		★
Spring-Loaded Sensors			
Standard			**Standard**
21	Single	Grounded	★
22	Dual	Grounded	★
23	Single	Ungrounded	★
24	Dual, Unisolated	Ungrounded	★
25	Dual, Isolated	Ungrounded	★
Bayonet Spring-Loaded Sensors[(1)(2)]			
Expanded			
31	Single	Grounded	
32	Dual	Grounded	
33	Single	Ungrounded	
34	Dual, Unisolated	Ungrounded	
35	Dual, Isolated	Ungrounded	

Thermocouple Type		Temperature Range	
Standard			**Standard**
J2	J	0 to 760 °C (32 to 1400 °F)	★
K2	K	0 to 1150 °C (32 to 2102 °F)	★
E2	E	0 to 871 °C (32 to 1600 °F)	★
T2	T	–180 to 371 °C (–292 to 700 °F)	★

Extension Type		Material	
Standard			**Standard**
A[(3)]	Nipple Coupling	SST	★
C[(3)]	Nipple Union	SST	★
N	None	(Use with extension length option code 00)	★

Extension Length (E)		
Standard		**Standard**
00	0.0 in.	★
30	3.0 in.	★
60	6.0 in.	★

Table 10. Series 183 Thermocouple Sensor Assemblies WITH Thermowell

★ The Standard offering represents the most common options. The starred options (★) should be selected for best delivery. The Expanded offering is subject to additional delivery lead time.

Thermowell Material				
Standard				**Standard**
A	Type 316 SST[4]			★
B	Type 304 SST			★
C	Carbon Steel			★
D	316L SST			★
E	304L SST			★
Expanded				
F	Alloy 20			
G	Alloy 400			
H	Alloy 600			
J	Alloy C-276			
L	Alloy B			
M	304 SST with PTFE coating			
P	Chrome Molybdenum F22			
R	Nickel 200			
T	Titanium			
U[5]	316 SST with Tantalum Sheath			
V	310 SST			
W	321 SST			
Z	Chrome Molybdenum F11			
Sensor/Immersion Length (U[6] length in inches)		**(L) Length in Inches**	**T[7] Length in Inches**	
Standard				**Standard**
015[8]	1.5-in.	4.0-in.	1.0-in.	★
020[6]	2.0-in.	4.0-in.	0.5-in.	★
025[6]	2.5-in.	4.0-in.	0.0-in.	★
030	3.0-in.	6.0-in.	1.5-in.	★
035	3.5-in.	6.0-in.	1.0-in.	★
040	4.0-in.	6.0-in.	0.5-in.	★
045	4.5-in.	6.0-in.	0.0-in.	★
050	5.0-in.	9.0-in.	2.5-in.	★
055	5.5-in.	9.0-in.	2.0-in.	★
060	6.0-in.	9.0-in.	1.5-in.	★
065	6.5-in.	9.0-in.	1.0-in.	★
070	7.0-in.	9.0-in.	0.5-in.	★
075	7.5-in.	9.0-in.	0.0-in.	★
080	8.0-in.	12.0-in.	2.5-in.	★
085	8.5-in.	12.0-in.	2.0-in.	★
090	9.0-in.	12.0-in.	1.5-in.	★
095	9.5-in.	12.0-in.	1.0-in.	★
100	10.0-in.	12.0-in.	0.5-in.	★
105	10.5-in.	12.0-in.	0.0-in.	★
110	11.0-in.	15.0-in.	2.5-in.	★
115	11.5-in.	15.0-in.	2.0-in.	★
120	12.0-in.	15.0-in.	1.5-in.	★
125	12.5-in.	15.0-in.	1.0-in.	★
130	13.0-in.	15.0-in.	0.5-in.	★
135	13.5-in.	15.0-in.	0.0-in.	★
140	14.0-in.	18.0-in.	2.5-in.	★
145	14.5-in.	18.0-in.	2.0-in.	★
150	15.0-in.	18.0-in.	1.5-in.	★
155	15.5-in.	18.0-in.	1.0-in.	★

Table 10. Series 183 Thermocouple Sensor Assemblies WITH Thermowell

★ The Standard offering represents the most common options. The starred options (★) should be selected for best delivery.
The Expanded offering is subject to additional delivery lead time.

Standard				**Standard**
160	16.0-in.	18.0-in.	0.5-in.	★
165	16.5-in.	18.0-in.	0.0-in.	★
170	17.0-in.	21.0-in.	2.5-in.	★
175	17.5-in.	21.0-in.	2.0-in.	★
180	18.0-in.	21.0-in.	1.5-in.	★
185	18.5-in.	21.0-in.	1.0-in.	★
190	19.0-in.	21.0-in.	0.5-in.	★
195	19.5-in.	21.0-in.	0.0-in.	★
200	20.0-in.	24.0-in.	2.5-in.	★
205	20.5-in.	24.0-in.	2.0-in.	★
210	21.0-in.	24.0-in.	1.5-in.	★
215	21.5-in.	24.0-in.	1.0-in.	★
220	22.0-in.	24.0-in.	0.5-in.	★
225	22.5-in.	24.0-in.	0.0-in.	★
Thermowell Style		**Mounting**	**Stem**	
Standard				**Standard**
T20(4)	Threaded	1/2-14 ANPT	Stepped	★
T22(4)	Threaded	3/4-14 ANPT	Stepped	★
T24(4)	Threaded	1-11.5 ANPT	Stepped	★
T26	Threaded	3/4-14 ANPT	Tapered	★
T28	Threaded	1-11.5 ANPT	Tapered	★
T30	Threaded	1 1/2-11 ANPT	Tapered	★
T32	Threaded	1/2-14 ANPT	Straight	★
T34	Threaded	3/4-14 ANPT	Straight	★
T36	Threaded	1-11.5 ANPT	Straight	★
T38	Threaded	3/4-14 ANPT	Straight	★
T44	Threaded	1/2-14 ANPT	Tapered	★
W38	Welded	3/4-in. pipe	Stepped	★
W40	Welded	1-in. pipe	Stepped	★
W42	Welded	3/4-in. pipe	Tapered	★
W44	Welded	1-in. pipe	Tapered	★
W46	Welded	1 1/4-in. pipe	Tapered	★
W48	Welded	3/4-in. pipe	Straight	★
W50	Welded	1-in. pipe	Straight	★
F10	Flanged	2-in., Class 150	Straight	★
F12	Flanged	3-in., Class 150	Straight	★
F52(9)	Flanged	1-in., Class 150	Stepped	★
F54	Flanged	1 1/2-in., Class 150	Stepped	★
F56	Flanged	2-in., Class 150	Stepped	★
F58(10)	Flanged	1-in., Class 150	Tapered	★
F60	Flanged	1 1/2-in., Class 150	Tapered	★
F62	Flanged	2-in. Class 150	Tapered	★
F64(9)	Flanged	1-in., Class 150	Straight	★
F66	Flanged	1 1/2-in., Class 150	Straight	★
F70	Flanged	1-in., Class 300	Stepped	★
F72	Flanged	1 1/2-in., Class 300	Stepped	★
F74	Flanged	2-in., Class 300	Stepped	★
F76(10)	Flanged	1-in., Class 300	Tapered	★
F78	Flanged	1 1/2-in., Class 300	Tapered	★

Table 10. Series 183 Thermocouple Sensor Assemblies WITH Thermowell
★ The Standard offering represents the most common options. The starred options (★) should be selected for best delivery.
The Expanded offering is subject to additional delivery lead time.

Standard				**Standard**
F80	Flanged	2-in., Class 300	Tapered	★
F82(9)	Flanged	1-in., Class 300	Straight	★
F84	Flanged	1 1/2-in., Class 300	Straight	★
F86	Flanged	2-in., Class 300	Straight	★
F88(11)	Flanged	1-in., Class 600	Stepped	★
F90(11)	Flanged	1 1/2-in., Class 600	Stepped	★
F92(11)	Flanged	2-in., Class 600	Stepped	★
F94(10)(11)	Flanged	1-in., Class 600	Tapered	★
F96(11)	Flanged	1 1/2-in., Class 600	Tapered	★
F98(11)	Flanged	2-in., Class 600	Tapered	★
F02(9)(11)	Flanged	1-in., Class 600	Straight	★
F04(11)	Flanged	1 1/2-in., Class 600	Straight	★
F06(11)	Flanged	2-in., Class 600	Straight	★
F16(11)	Flanged	1 1/2-in., Class 900	Tapered	★
F34(11)	Flanged	1 1/2-in., Class 1500	Tapered	★
F24(11)	Flanged	2-in., Class 1500	Tapered	★
F08(11)	Flanged	1 1/2-in., Class 2500	Tapered	★
Q02(12)	Sanitary, Tri-Clamp	1-in., Tri-Clamp	Stepped	★
Q04c	Sanitary, Tri-Clamp	1 1/2-in., Tri-Clamp	Stepped	★
Q06(11)	Sanitary, Tri-Clamp	2-in., Tri-Clamp	Stepped	★
Q08(11)	Sanitary, Tri-Clamp	3-in., Tri-Clamp	Stepped	★
Q20(11)	Sanitary, Tri-Clamp	3/4-in., Tri-Clamp	Straight	★
Q22(11)	Sanitary, Tri-Clamp	1-in., Tri-Clamp	Straight	★
Q24(11)	Sanitary, Tri-Clamp	1 1/2-in., Tri-Clamp	Straight	★
Q26(11)	Sanitary, Tri-Clamp	2-in., Tri-Clamp	Straight	★
Q28(11)	Sanitary, Tri-Clamp	3-in., Tri-Clamp	Straight	★

Options (Include with selected model number)

Product Certifications		
Standard		**Standard**
E5	FM Explosion-proof approval (See Figure 24)	★
E6	CSA Explosion-proof approval (See Figure 25)	★
E7(13)	IECEx Flameproof approval (See Figure 28)	★
E1	KEMA/CENELEC approval (See Figure 27)	★
Mounting Adapters		
Standard		**Standard**
M5-M7	Mounting adapter: Sensor Compression Fitting: M5 = 1/8-27 NPT, M6 = 1/4-18 NPT, M7 = 1/2-14 NPT	★
Special External Pressure Test		
Standard		**Standard**
R01	Special External Pressure Test	★
Material Certification		
Standard		**Standard**
Q8	Material Certification	★
Dye Penetration Test		
Standard		**Standard**
R03	Dye Penetration Test	★
Thermowell Special Cleaning		
Standard		**Standard**
R04	Thermowell Special Cleaning	★
NACE Approval		
Standard		**Standard**
R05	NACE Approval	★

Table 10. Series 183 Thermocouple Sensor Assemblies WITH Thermowell

★ The Standard offering represents the most common options. The starred options (★) should be selected for best delivery. The Expanded offering is subject to additional delivery lead time.

SST Plug and Chain		
Standard		**Standard**
R06	SST Plug and Chain	★
Full Penetration Weld		
Standard		**Standard**
R07[14]	Full Penetration Weld	★
Thermowell Concentric Serrations		
Standard		**Standard**
R09[14][15]	Concentric Serrations of Thermowell Flange Face	★
Flat Faced Flange		
Standard		**Standard**
R10 [13][14]	Flat Faced Flange	★
Vent Hole		
Standard		**Standard**
R11	Vent Hole	★
Thermowell Xray		
Standard		**Standard**
R12	Thermowell Xray	★
Special Surface Finish		
Standard		**Standard**
R14	Special Surface Finish (12 Ra Maximum “U” length = 22.5-in.)	★
Ring Joint Flange		
Standard		**Standard**
R16[13][14]	Ring joint flange (Not available with 0-in. (T) length)	★
Electropolish		
Standard		**Standard**
R20	Electropolish	★
Wake Frequency		
Standard		**Standard**
R21	Wake Frequency-Thermowell Strength Calculation	★
Internal Pressure Test		
Standard		**Standard**
R22	Internal Pressure Test	★
Brass Plug & Chain		
Standard		**Standard**
R23	Brass Plug & Chain	★
Canadian Registration No.		
Expanded		
R24	CRN Marking for British Columbia	
R25	CRN Marking for Alberta	
R26	CRN Marking for Saskatchewan	
R27	CRN Marking for Manitoba	
R28	CRN Marking for Ontario	
R29	CRN Marking for Quebec	
R30	CRN Marking for New Brunswick	
R31	CRN Marking for Nova Scotia	
R32	CRN Marking for Prince Edward Island	
R33	CRN Marking for Yukon Territory	
R34	CRN Marking for Northwest Territory	
R35	CRN Marking for Nunavut	
R36	CRN Marking for Newfoundland and Labrador	
Twell From Hex Stock		
Expanded		
R37	Thermowell from Hex stock	

Table 10. Series 183 Thermocouple Sensor Assemblies WITH Thermowell

★ The Standard offering represents the most common options. The starred options (★) should be selected for best delivery.
The Expanded offering is subject to additional delivery lead time.

Assemble to Options		
Standard		**Standard**
XA(16)	Assemble connection head or transmitter to a sensor assembly	★

(1) This option is not available with explosion-proof approval option codes E1, E5, E6, or E7.

(2) Bayonet spring-loaded style available to 45 inches. Codes 31 - 35 are not available with Sensor Lead Wire Termination codes R or P.

(3) Codes A and C must be used with an extension length. Additional non-standard (E) lengths are available in 1/2-in. increments from 2.5 to 9-in.

(4) Standard configuration with best delivery.

(5) Available only with straight stem thermowells.

(6) Thermowells with an overall length ("U" + "T" + 1.75-in.) of 36-in. or less are machined from solid barstock. Thermowells with an overall length larger than 42-in. will be constructed using a welded 3-piece design and are available only with a stepped stem style.

(7) For additional (T) lengths, see Table 15 on page 40.

(8) Straight or Tapered stem thermowells only.

(9) F52, F64, F82, and F02 are not compatible with 1" Sch. XXS pipe.

(10) F58, F76, and F94 may not be compatible with 1" Sch. pipe and are not compatible with 1" Sch. 80, 160 or XXS pipe.

(11) Cannot be used with 0-in. (T) length. F08 cannot be used with 0- or 1/2-in. (T) length

(12) Limited to 24" immersion length and 316 or 304 SST materials only.

(13) IECEx Flameproof approvals only applicable if installed with a Rosemount 248, 644, or 3144P transmitter.

(14) Available on flanged thermowells only.

(15) Only one flange face option allowed.

(16) If ordering option code XA with a transmitter, specify the same option on the transmitter model code.

Table 11. Ordering Example

Typical Model Number	**Model**	**Lead Wire Termination**	**Sensor Type**	**ISA Type**	**Extension Type**	**Extension Length**	**Material Code**	**Immersion Length**	**Mounting Style**	**Additional Options**
	0183	N	21	J2	A	30	A	075	T22	E5

Rosemount 68Q Sanitary Sensor



The Rosemount 68Q Sanitary Sensor has designs that provide flexible and reliable temperature measurements in hygienic process environments.

Features include:

- Industry-standard RTD sensor design
- Tri-Clamp endcap designs for easy installation
- 3-A Standards approval
- Variety of enclosure and connection head options
- Calibration services to give you insight to sensor performance (Option Codes V1-V7)
- Electropolishing Surface Finish (Option Code R20)
- Assemble to Transmitter option (Option Code XA)

Table 12. Series 68Q Sanitary Platinum RTD Sensor Assemblies
★ The Standard offering represents the most common options. The starred options (★) should be selected for best delivery.
The Expanded offering is subject to additional delivery lead time.

Model	Product Description		
0068Q	Sanitary Platinum RTD Sensor Assembly		
Sensor Lead Wire Termination			
Standard			**Standard**
P	Aluminum Connection Head, Six Terminals, Flat Cover, Painted		★
L	Aluminum Connection Head, Six Terminals, Extended Cover, Painted		★
N	Sensor only		★
D	Rosemount Aluminum Connection Head with 1/2-in. Entries		★
Expanded			
C	Polypropylene Connection Head		
G	Rosemount SST Connection Head with 1/2-in. Entries		
Sensor Type		**Temperature**	
Standard			**Standard**
11	Single Stepped Stem	-50 to 200 °C (-58 to 392 °F)	★
15	Dual Stepped Stem	-50 to 200 °C (-58 to 392 °F)	★
21	Single Straight Stem	-50 to 200 °C (-58 to 392 °F)	★
25	Dual Straight Stem	-50 to 200 °C (-58 to 392 °F)	★
30(1) (2)	Mini General Purpose 6-in. lead with 1/2-in. NPT Threaded Adapter	-50 to 200 °C (-58 to 392 °F)	★
31(1)(2)(3)	Mini General Purpose 6-in. lead with 1/2-in. NPSM Threaded Adapter	-50 to 200 °C (-58 to 392 °F)	★
32(1)(2)(3)	Mini General Purpose 180-in. cable with strain relief	-50 to 200 °C (-58 to 392 °F)	★
33(1)(2)(3)	Mini General Purpose 300-in. cable with strain relief	-50 to 200 °C (-58 to 392 °F)	★
41(2)(4)	Mini Spring Loaded with thermowell replacement sensor	-50 to 200 °C (-58 to 392 °F)	★
Sensor Immersion Length (L) inches			
Standard			**Standard**
U010	1.00 in.		★
U011	1.10 in.		★
U012	1.20 in.		★
U013	1.25 in.		★
U014	1.40 in.		★
U015	1.50 in.		★

Table 12. Series 68Q Sanitary Platinum RTD Sensor Assemblies
★ The Standard offering represents the most common options. The starred options (★) should be selected for best delivery.
The Expanded offering is subject to additional delivery lead time.

Standard			**Standard**
U016	1.60 in.		★
U017	1.70 in.		★
U018	1.80 in.		★
U019	1.90 in.		★
U020	2.00 in.		★
U025	2.50 in.		★
U030	3.00 in.		★
U035	3.50 in.		★
U040(5)	4.00 in.		★
U045	4.50 in.		★
U050(5)	5.00 in.		★
U055	5.50 in.		★
U060	6.00 in.		★
U065	6.50 in.		★
U070	7.00 in.		★
U075	7.50 in.		★
U080	8.00 in.		★
U085	8.50 in.		★
U090	9.00 in.		★
U095	9.50 in.		★
Endcap Type		**O.D. Tube Size (inches)**	
Standard			**Standard**
L050(6)	Tri-Clamp	1/2 to 3/4 in.	★
L100	Tri-Clamp	1.00 in.	★
L150(5)	Tri-Clamp	1.50 in.	★
L200(5)	Tri-Clamp	2.00 in.	★
L250	Tri-Clamp	2.50 in.	★
L300	Tri-Clamp	3.00 in.	★

Options (Include with selected model number)

Callendar-Van Dusen Constants		
Standard		**Standard**
V1-V7	V-Callendar-van Dusen Constants (V3, V4, V6 not available with 68Q)	★
Calibration Schedule		
Standard		**Standard**
X8	Customer-Specified Temperature Range Calibration	★
X9	Customer-Specified Single Temperature Point Calibration	★
Calibration Certification		
Standard		**Standard**
Q4	Calibration Certification, Customer-Specified Temperature	★
Special Surface Finish Electro Polish		
Standard		**Standard**
R20(7)	Electropolishing of wetted surfaces	★
Special Surface Finish High Mechanical Polish		
Standard		**Standard**
HP	High Mechanical Polish, 15R_a or better	★
Thermowell Material Certification		
Standard		**Standard**
Q8	Material Certification	★
Surface Finish Certification		
Standard		**Standard**
Q16	Surface Finish Certification	★

Table 12. Series 68Q Sanitary Platinum RTD Sensor Assemblies

★ The Standard offering represents the most common options. The starred options (★) should be selected for best delivery.
The Expanded offering is subject to additional delivery lead time.

Assemble to Options		
Standard		**Standard**
XA[8]	Assemble connection head or transmitter to a sensor assembly (PTFE paste where appropriate, fully wired.)	★

(1) Only available in immersion lengths between 1-in. and 2-in.

(2) Only available with Tri-Clamp O.D. tube size 1/2 to 3/4-in. (Endcap type code L050).

(3) Only available with Sensor lead Wire Termination code N (sensor only).

(4) Only available in U lengths of 2.0, 2.5, or 3.0 inches.

(5) Standard configuration with best delivery.

(6) Only available in sensor type code 30, 31, 32, 33, 41.

(7) If ordering a Mini General Purpose or Mini Spring Loaded Sensor (Sensor Type codes 30, 31, 32, 33, or 41) with Electropolishing, High Mechanical Polish (Option code HP) is also required.

(8) If ordering option code XA with a transmitter, specify the same option on the transmitter model code.

Ordering Example

	Model	**Lead Wire Termination**	**Sensor Type**	**Immersion Length**	**Endcap Type, Tube Size**	**Additional Options**
Typical Model Number	0068Q	N	11	U050	L150	V2

Rosemount 58C Cut-to-Fit Sensor

The Rosemount 58C Cut-to-Fit Sensor has designs that provide flexible and reliable temperature measurements in process environments.

Features include:

- Industry-standard RTD sensor design
- Cut-to-fit eliminates need to stock large selection of sensors in specific lengths
- 12-, 24-, 36-, and 48-in. lengths available

Table 13. Series 58C Cut-to-Fit RTD Sensors
★ The Standard offering represents the most common options. The starred options (★) should be selected for best delivery.
The Expanded offering is subject to additional delivery lead time.

Model	Product Description	
0058C	Platinum Resistance Temperature Sensor	
Sensor Lead Wire Termination		
Standard		**Standard**
D	Rosemount Aluminum Connection Head with 1/2-in. Entries	★
R	Aluminum Connection Head, Six Terminals, Flat Cover, Unpainted	★
T	Aluminum Connection Head, Six Terminals, Extended Cover, Unpainted	★
P	Aluminum Connection Head, Six Terminals, Flat Cover, Painted	★
L	Aluminum Connection Head, Six Terminals, Extended Cover, Painted	★
N	Sensor only with 6-in. PTFE-insulated, 22-gauge lead wires	★
Expanded		
C	Polypropylene Connection Head	
G	Rosemount SST Connection with 1/2-in. Entries	
Sensor Immersion Length		
Standard		**Standard**
1200	12 in.	★
2400	24 in.	★
3600	36 in.	★
4800	48 in.	★
Mounting Adapter		
Standard		**Standard**
NNN	None	★
C01(1)	One-compression fitting 1/2–14 ANPT	★
C02(1)	Two-compression fittings 1/2–14 ANPT	★
SNN	Spring-loaded fitting 1/2–14 ANPT	★

(1) The only difference between C01 and C02 is that the C01 includes one fitting while the C02 option includes two fittings.

Ordering Example

Typical Model Number

Model	Lead Wire Termination	Sensor Length	Mounting Adapter
0058C	R	1200	SNN

Table 14. Series 58C Spare Parts List
(specify spare part number separately when ordering mounting adapters)

Mounting Adapters	Option Code	Spare Part Number
Compression fitting 1/2–14 ANPT	C01 and C02	C07961-0008
Spring loaded fitting 1/2–14 ANPT	SNN	00058-0010-0001

Rosemount 91 Series Thermowells



The Rosemount 91 Series Thermowells have designs that provide flexible and reliable temperature measurements in process environments.

Features include:

- Threaded, Flanged, and Weld-in Styles
- Wake Frequency Calculations (Option Code R21)
- NACE Approval (Option Code R05)
- Internal Pressure Test (Option Code R22)
- External Pressure Test (Option Code R01)

Table 15. Series 91 Thermowells

★ The Standard offering represents the most common options. The starred options (★) should be selected for best delivery.
The Expanded offering is subject to additional delivery lead time.

Model	Description	
0091	Thermowells	
Thermowell Material		
Standard		**Standard**
A	Type 316 SST	★
B	Type 304 SST	★
C	Carbon Steel	★
D	316L SST	★
E	304L SST	★
Expanded		
F	Alloy 20	
G	Alloy 400	
H	Alloy 600	
J	Alloy C-276	
L	Alloy B	
M	304 SST with PTFE coating	
P	Chrome Molybdenum F22	
R	Nickel 200	
T	Titanium	
U[(2)]	316 SST with tantalum sheath	
V	310 SST	
W	321 SST	
X	Special Material	
Y	316Ti SST	
Z	Chrome Molybdenum F11	
Sensor/Immersion Length (U) in inches[(1)]		
Standard		**Standard**
005	0.5 in.	★
007	0.75 in.	★
010	1.0 in.	★
015[(2)]	1.5 in.	★
020	2.0 in.	★

Table 15. Series 91 Thermowells

★ The Standard offering represents the most common options. The starred options (★) should be selected for best delivery.
The Expanded offering is subject to additional delivery lead time.

Standard		Standard
025	2.5 in.	★
030	3.0 in.	★
035	3.5 in.	★
040	4.0 in.	★
045	4.5 in.	★
050	5.0 in.	★
055	5.5 in.	★
060	6.0 in.	★
065	6.5 in.	★
070	7.0 in.	★
075	7.5 in.	★
080	8.0 in.	★
085	8.5 in.	★
090	9.0 in.	★
095	9.5 in.	★
100	10.0 in.	★
105	10.5 in.	★
110	11.0 in.	★
115	11.5 in.	★
120	12.0 in.	★
125	12.5 in.	★
130	13.0 in.	★
135	13.5 in.	★
140	14.0 in.	★
145	14.5 in.	★
150	15.0 in.	★
155	15.5 in.	★
160	16.0 in.	★
165	16.5 in.	★
170	17.0 in.	★
175	17.5 in.	★
180	18.0 in.	★
185	18.5 in.	★
190	19.0 in.	★
195	19.5 in.	★
200	20.0 in.	★
205	20.5 in.	★
210	21.0 in.	★
215	21.5 in.	★
220	22.0 in.	★
225	22.5 in.	★
230	23.0 in.	★
240	24.0 in.	★
250	25.0 in.	★
260	26.0 in.	★
270	27.0 in.	★
280	28.0 in.	★
290	29.0 in.	★
300	30.0 in.	★
310	31.0 in.	★
320	32.0 in.	★

Table 15. Series 91 Thermowells

★ The Standard offering represents the most common options. The starred options (★) should be selected for best delivery. The Expanded offering is subject to additional delivery lead time.

Standard					**Standard**
330	33.0 in.				★
340	34.0 in.				★
350	35.0 in.				★
360	36.0 in.				★
370	37.0 in.				★
380	38.0 in.				★
390	39.0 in.				★
400	40.0 in.				★
410	41.0 in.				★
420	42.0 in.				★
430	43.0 in.				★
440	44.0 in.				★
450	45.0 in.				★
460	46.0 in.				★
470	47.0 in.				★
480	48.0 in.				★
Thermowell Mounting Style		**Stem Style**	**Tip A (in.)**	**Root B (in.)**	
Standard					**Standard**
T20	Thread, 1/2–14 ANPT	Stepped	0.50	0.63	★
T22	Thread, 3/4–14 ANPT	Stepped	0.50	0.75	★
T24	Thread, 1–11.5 ANPT	Stepped	0.50	0.88	★
T26	Thread, 3/4–14 ANPT	Tapered	0.63	0.88	★
T28	Thread, 1–11.5 ANPT	Tapered	0.63	1.06	★
T30	Thread, 1 1/2–11.5 ANPT	Tapered	0.75	1.50	★
T32	Thread, 1/2–14 ANPT	Straight	0.50	0.50	★
T34	Thread, 3/4–14 ANPT	Straight	0.75	0.75	★
T36	Thread, 1–11.5 ANPT	Straight	0.75	0.75	★
T38	Thread, 3/4–14 ANPT	Straight	0.50	0.50	★
T44	Thread, 1/2–14 ANPT	Tapered	0.50	0.63	★
W38	Weld, 3/4-in. pipe	Stepped	0.50	0.75	★
W40	Weld, 1-in. pipe	Stepped	0.50	0.88	★
W42	Weld, 3/4-in. pipe	Tapered	0.63	0.88	★
W44	Weld, 1-inch Pipe,	Tapered	0.75	1.00	★
W46	Weld, 1 1/4-inch Pipe	Tapered	0.75	1.25	★
W48	Weld, 3/4-inch Pipe	Straight	0.75	0.75	★
W50	Weld, 1-inch Pipe	Straight	0.75	0.75	★
F10	Flange, F = 2-inch, Class 150	Straight	0.75	0.75	★
F12	Flange, F = 3-inch, Class 150	Straight	0.75	0.75	★
F52(3)	Flange, F = 1-inch, Class 150	Stepped	0.50	0.75	★
F54	Flange, F = 1½-inch, Class 150	Stepped	0.50	0.75	★
F56	Flange, F = 2-inch, Class 150	Stepped	0.50	0.75	★
F58(4)	Flange, F = 1-inch, Class 150	Tapered	0.75	1.00	★
F60	Flange, F = 1½-inch, Class 150	Tapered	0.75	1.00	★
F62	Flange, F = 2-inch, Class 150	Tapered	0.75	1.25	★
F64(3)	Flange, F = 1-inch, Class 150	Straight	0.75	0.75	★
F66	Flange, F = 1½-inch, Class 150	Straight	0.75	0.75	★
F70	Flange, F = 1-inch, Class 300	Stepped	0.50	0.75	★
F72	Flange, F = 1½-inch, Class 300	Stepped	0.50	0.75	★
F74	Flange, F = 2-inch, Class 300	Stepped	0.50	0.75	★

Table 15. Series 91 Thermowells

★ The Standard offering represents the most common options. The starred options (★) should be selected for best delivery.
The Expanded offering is subject to additional delivery lead time.

Standard					**Standard**
F76[4]	Flange, F = 1-inch, Class 300	Tapered	0.75	1.00	★
F78	Flange, F = 1½-inch, Class 300	Tapered	0.75	1.00	★
F80	Flange, F = 2-inch, Class 300	Tapered	0.75	1.25	★
F82[3]	Flange, F = 1-inch, Class 300	Straight	0.75	0.75	★
F84	Flange, F = 1½-inch, Class 300	Straight	0.75	0.75	★
F86	Flange, F = 2-inch, Class 300	Straight	0.75	0.75	★
F88[5]	Flange, F = 1-inch, Class 600	Stepped	0.50	0.75	★
F90[5]	Flange, F = 1½-inch, Class 600	Stepped	0.50	0.75	★
F92[5]	Flange, F = 2-inch, Class 600	Stepped	0.50	0.75	★
F94[4][5]	Flange, F = 1-inch, Class 600	Tapered	0.75	1.00	★
F96[5]	Flange, F = 1½-inch, Class 600	Tapered	0.75	1.00	★
F98[5]	Flange, F = 2-inch, Class 600	Tapered	0.75	1.25	★
F02[3][5]	Flange, F = 1-inch, Class 600	Straight	0.75	0.75	★
F04[5]	Flange, F = 1½-inch, Class 600	Straight	0.75	0.75	★
F06[5]	Flange, F = 2-inch, Class 600	Straight	0.75	0.75	★
F16[5]	Flange, F = 1½-inch, Class 900	Tapered	0.75	1.00	★
F34[5]	Flange, F = 1½-inch, Class 1500	Tapered	0.75	1.00	★
F24[5]	Flange, F = 2-inch, Class 1500	Tapered	0.75	1.25	★
F08[6]	Flange, F = 1½-inch, Class 2500	Tapered	0.75	1.00	★
Q02[7]	Sanitary, 1-in.,Tri-Clamp	Stepped	0.50	0.75	★
Q04[8]	Sanitary, 1 1/2-in., Tri-Clamp	Stepped	0.50	0.75	★
Q06[8]	Sanitary, 2-in., Tri-Clamp	Stepped	0.50	0.75	★
Q08[8]	Sanitary, 3-in.,Tri-Clamp	Stepped	0.50	0.75	★
Q20[8]	Sanitary, 3/4-in., Tri-Clamp	Straight	0.44	0.44	★
Q22[8]	Sanitary, 1-in.,Tri-Clamp	Straight	0.50	0.50	★
Q24[8]	Sanitary, 1 1/2-in., Tri-Clamp	Straight	0.50	0.50	★
Q26[8]	Sanitary, 2-in., Tri-Clamp	Straight	0.50	0.50	★
Q28[8]	Sanitary, 3-in.,Tri-Clamp	Straight	0.50	0.50	★
Thermowell Lagging Length (T) in.					
Standard					**Standard**
T000	0.0 in.				★
T005	0.5 in.				★
T010	1.0 in.				★
T015	1.5 in.				★
T020	2.0 in.				★
T025	2.5 in.				★
T030	3.0 in.				★
T035	3.5 in.				★
T040	4.0 in.				★
T045	4.5 in.				★
T050	5.0 in.				★
T055	5.5 in.				★
T060	6.0 in.				★
T065	6.5 in.				★
T070	7.0 in.				★
T075	7.5 in.				★
T080	8.0 in.				★
T085	8.5 in.				★
T090	9.0 in.				★
T095	9.5 in.				★

Table 15. Series 91 Thermowells

★ The Standard offering represents the most common options. The starred options (★) should be selected for best delivery.
The Expanded offering is subject to additional delivery lead time.

Instrument Connection Thread		
Standard		**Standard**
P	1/2–14 NPSM	★
D	1/2–14 ANPT for CSA	★

Options (Include with selected model number)

Special External Pressure Test		
Standard		**Standard**
R01[8]	Special External Pressure Test	★
Material Certification		
Standard		**Standard**
Q8	Material Certification	★
Dye Penetration Test		
Standard		**Standard**
R03	Dye Penetration Test	★
Thermowell Special Cleaning		
Standard		**Standard**
R04	Thermowell Special Cleaning	★
NACE Approval		
Standard		**Standard**
R05	NACE Approval	★
SST Plug and Chain		
Standard		**Standard**
R06	SST Plug and Chain	★
Full Penetration Weld		
Standard		**Standard**
R07[9]	Full Penetration Weld	★
Thermowell Concentric Serrations		
Standard		**Standard**
R09[9][10]	Concentric Serration of Thermowell Flange Face	★
Flat Faced Flange		
Standard		**Standard**
R10 [9][10]	Flat Face Flange	★
Vent Hole		
Standard		**Standard**
R11	Vent Hole	★
Special Surface Finish		
Standard		**Standard**
R14[11]	Thermowell Special Surface Finish (12 R_a Max) (Maximum (U) length = 22.5 in.)	★
Ring Joint Flange		
Standard		**Standard**
R16[5][9][10]	Ring Joint Flange (Not available with 0-in. (T) length)	★
Electropolish		
Standard		**Standard**
R20[12]	Electropolish	★
Wake Frequency		
Standard		**Standard**
R21	Wake Frequency-Thermowell Strength Calculation	★
Internal Pressure Test		
Standard		**Standard**
R22	Internal Pressure Test	★
Brass Plug & Chain		
Standard		**Standard**
R23	Brass Plug & Chain	★

Table 15. Series 91 Thermowells

★ The Standard offering represents the most common options. The starred options (★) should be selected for best delivery.
The Expanded offering is subject to additional delivery lead time.

Canadian Registration No.		
Expanded		
R24	CRN Marking for British Columbia	
R25	CRN Marking for Alberta	
R26	CRN Marking for Saskatchewan	
R27	CRN Marking for Manitoba	
R28	CRN Marking for Ontario	
R29	CRN Marking for Quebec	
R30	CRN Marking for New Brunswick	
R31	CRN Marking for Nova Scotia	
R32	CRN Marking for Prince Edward Island	
R33	CRN Marking for Yukon Territory	
R34	CRN Marking for Northwest Territory	
R35	CRN Marking for Nunavut	
R36	CRN Marking for Newfoundland and Labrador	
Twell From Hex Stock		
Expanded		
R37	Thermowell From Hex stock	

(1) Thermowells with an overall lengths ("U" + "T" + 1.75-in.) of 36-in. or less are machined from solid bar stock. Thermowells with an overall length larger than 42-in. will be constructed using a welded 3-piece design and are available only with a stepped stem style.

(2) Available in straight stem only.

(3) F52, F64, F82 and F02 are not compatible with 1" Sch. XXS pipe.

(4) F58, F76 and F94 may not be compatible with 1" Sch. pipe and are not compatible with 1" Sch. 80, 160 or XXS pipe.

(5) Not available with 0-in. (T) length.

(6) Not available with 0- or $^{1}/_{2}$-in. (T) length.

(7) Limited to 24" immersion length and 316 or 304 SST materials only.

(8) Maximum (U) length = 42.0-in.

(9) Available on flanged thermowells only.

(10) Only one flange face option allowed.

(11) Maximum (U) length = 22.5 inches.

(12) Not available on flanged thermowells and L lengths longer than 24".

Ordering Example

Typical Model Number

Model	Material	Immersion Length	Mounting Style	Lagging Length	Connection Thread	Additional Options
0091	A	030	F52	T040	P	R01 R05 R07

Introduction

OVERVIEW

Emerson Process Management offers a wide variety of RTD and thermocouple sensors that are available alone or as complete assemblies including connection heads, thermowells, and extension fittings. In addition to complete assemblies, Emerson Process Management offers heads, coupling/nipple and union/nipple extensions, compression fittings, and thermowells.

Using this Product Data Sheet (PDS)

Use this PDS to order complete temperature sensor assemblies, which include sensors, thermowells, extensions, and connection heads. These options can also be ordered separately. For example, you can order a thermowell, extension, or connection head for use with an existing sensor. In each case it is important to know and understand the sections of this PDS when specifying the items.

Threaded Sensors and Assemblies

- Includes descriptions, specifications, and ordering information for Series 58C, 68, 68Q, and 78 RTDs, and the Series 183 thermocouples.
- Includes information for ordering sensors, connection heads, extensions, and thermowells as complete assemblies.

Calibration

- Includes characterization schedules and information for ordering calibrated Series 68, 68Q, and 78 RTD Sensors.
- Includes information regarding the use of Callendar-Van Dusen constants to match specific Series 68, 68Q, and 78 RTDs to Rosemount Smart Temperature Transmitters.

Mounting Accessories

- Includes descriptions, specifications, and ordering information for temperature accessories such as thermowells, extensions, connection heads, mounting adapters, lead wire extensions, connectors, seals, and thermowells.

Hazardous Area Approvals

- Includes descriptions of the FM, CSA, IECEx, and ATEX approvals for sensors and connection heads.

Configuration Data Sheet

- Provides a form used for thermowell application calculations.

RTD

Series 58C, 68, 68Q, and 78 platinum RTD temperature sensors are primarily used when high accuracy, durability, and long-term stability are required. These sensors conform to international standards: IEC-751, DIN EN 60751, and BS EN 60751.(1)

Series 58C platinum RTD temperature sensors:

- Combine an economical thin-film design with a sheath that can be shortened to any length with tubing cutter.

Series 68Q Quick Response Sanitary RTD sensors:

- Conform to 3–A Sanitary Standards and feature product contact surfaces designed for CIP cleaning.

Series 68 platinum RTD temperature sensors:

- Provide high performance in an economical thin-film design.

Series 78 platinum RTDs temperature sensors:

- Use a wire-wound element which allows for a broader measurement range.

Thermocouples

Series 183 thermocouple temperature sensors conform to ASTM E-230, and are available in types J, K, E, and T.

Series 183 thermocouple temperature sensors are available:

- grounded or ungrounded
- isolated or unisolated
- with immersion lengths from 2 to 48 inches.

(1) 100 ohms at 0 °C, α = 0.00385 ohms/ohm/°C

The Use of 2-, 3-, and 4- wire RTDs

To help you attain the highest possible temperature measurement accuracy, Rosemount provides 4-wire sensors for all single element RTDs. You can use these RTDs in 2-, 3-, or 4-wire configurations by simply securing the unneeded leads with tape. To properly wire the 4-wire RTD for use in a 2-, 3-, or 4-wire configuration, refer to the following wiring diagrams:

2-wire Configuration

2-wire RTDs provide one connection to each end of the sensor. In a 2-wire configuration, lead wires add resistance to the circuit which cannot be compensated. The 2-wire configuration is rarely used because the added lead wire resistance can cause substantial errors in the temperature reading.

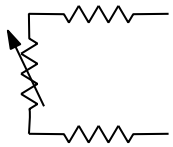

3-wire Configuration

3-wire RTDs provide one connection to one end of the sensor, and two connections to the other end. The 3-wire approach does not eliminate all lead wire effects. However, for sensors with lead wires of the same length, lead wire effects are slight, and the approach provides reasonable accuracy.

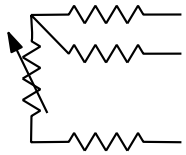

4-wire Configuration

The most effective way to eliminate lead wire effects is with two connections at each end of the sensor. 4-wire RTDs fully compensate for lead wire effects.

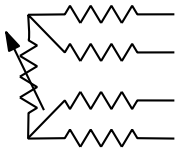

Benefits and Limitations of RTDs when compared to Thermocouples

Benefits:

- Higher accuracy
- Better linearity and long-term stability
- Cold junction compensation not required
- Special extension lead wire not required
- Less susceptible to noise
- Can be “matched” to a Rosemount transmitter with transmitter sensor matching

Limitations

- Lower maximum temperature limit
- Slower response time in applications without a thermowell
- Reduced resistance to vibration-induced failure

HOW TO DECIDE WHAT TO ORDER

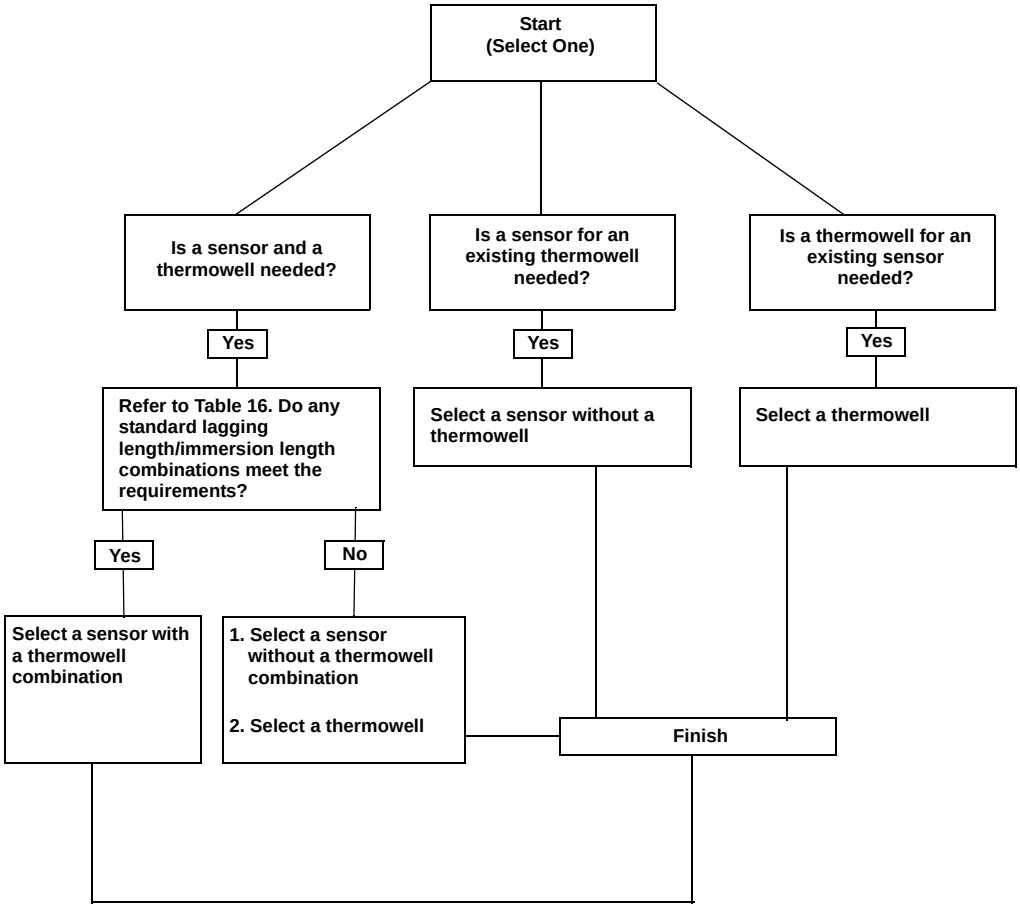

If Rosemount sensor and model code is visible on the Sensor:

1. If the thermowell is ordered separately (0078P23C30**N**060) 11th digit = 'N'
   a. Start with immersion length - digits 12-14; 060 = 6.0 in.
   b. Add extension length - digits 9 & 10; 30 = 3.0 in. (3 + 6 = 9)

Order the replacement sensor for the total length without connection heads (5th digit **N**) and extension (8th digit **N**) 0078N23N00N**090**

2. If the thermowell is ordered integral to sensor (0078P23C**30A060**W40) 11th digit = not 'N'
   a. Immersion length 'U' is defined by the 12-14th digits; 060 = 6.0 in.
   b. Look up 'L' length from the correct order chart for given 'U' length. This will be 4 inches for short sensors, or a whole number divisible by 3 for sensors longer than 4 inches (4, 6, 9, 12, 15, 18... inches);
   'U' 060 = 9 inches 'L'
   c. Add extension length as defined by 9th and 10th digits; 30 = 3.0 in. to the 'L' length found in table.
   (9" + 3" = 12", Length code 120)
   d. This will be the replacement sensor length 'X'.

Order sensor without connection head (5th digit **N**) or extension (8th digit **N**) 0078**N**23**N**00N**120**

If model code is NOT visible on the sensor, follow one of the three instructions below:

1. Measure the inside depth of the thermowell *preferred*
    a. Measure down the inside of the thermowell hole to the top-most face of the extension used, or the thermowell if no extension
    b. This will be the replacement sensor length if depth = 12.0 in., sensor length will be 12 in.

Order sensor without connection heads (5th digit **N**) or extension (8th digit **N**) 0078**N**23**N**00N**120**

2. Measure the overall outside length of the thermowell from end to end.
    a. Measure down the outside of the thermowell from the tip to the end face of the extension if used, or the thermowell if no extension.
    b. Subtract 1/4 in. to account for thickness of the thermowell at the tip.
    c. This will be the replacement sensor length. Overall length = 12.25 in., the replacement will be 12 in.

Order sensor without connection heads (5th digit **N**) or extension (8th digit **N**) 0078**N**23**N**00N**120**

3. Measure the old sensor length from tip to the flat face of the threaded process connection.
    a. Determine if the sensor is spring loaded or general purpose (welded) where the sensor sheath meets the threaded adaptor.
    b. For spring loaded sensors, the measurement of the exposed sheath from tip of the start of the threaded portion will be the same as the replacement sensor length.
        • Normal spring compression for a Rosemount sensor is assumed to be 1/2 in. and the normal thread engagement is also assumed to be 1/2 in.
        • Round to the nearest whole 1/4 in. increment as the spring will make up any small differences
        • Replacement sensor for a spring loaded sensor measuring 6.5 inches will be 6.5 in. length

Order sensor without connection heads (5th digit **N**) or extension (8th digit **N**) 0078N15N00N**065**

    c. For general purpose sensors with the distance from tip to threaded adapter:
        • Add 1/4 in. to allow clearance, preventing bottoming sensor during installation.
        • Add 1/2 in. for the thread engagement of the sensor in the thermowell.
        • The replacement sensor for a general purpose sensor measuring 5.75 in. from the tip to the threaded adaptor is 6.5 in. (5 3/4 + 1/4 + 1/2 = 6 1/2 in).

Order sensor without connection heads (5th digit **N**) or extension (8th digit **N**) 0078N15N00N**065**

If model code is visible on the thermowell (0091A060W40T015P) follow the instructions below to determine sensor model number:

a. Start with immersion length digits 6-8, 060 = 6.0 in.
b. Add additional lagging length digits 13-15, 015 = 1.5 in.
c. To those lengths add 1.5 in. (this is the additional standard lagging length on all Rosemount thermowells) 1.75 in. minus (0.25 in. thermowell tip thickness) = 1.50 in.
d. 6.0 +1.5 +1.5 = 9 in.

Order replacement sensor 0078N23N00N**090**

SPRING-LOADED SENSOR DIMENSIONS

When a spring-loaded sensor is used properly, the spring should be compressed approximately 1/2-inch. Therefore, all measurements of spring-loaded sensors are made with the spring compressed. If you measure an existing spring-loaded sensor while it is in a relaxed state, you must subtract 1/2-inch to arrive at the installed length (X) that must be ordered. See Figure 1.

Figure 1. Spring Loaded Sensors Dimensions

Compressed Spring Loaded Sensor

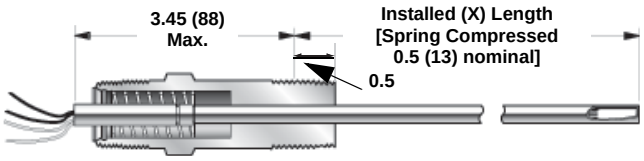

Spring loaded sensor in a compressed state: The actual sensor length is measured when the spring is compressed approximately 1/2-in. shorter than the relaxed sensor.

Relaxed Spring Loaded Sensor

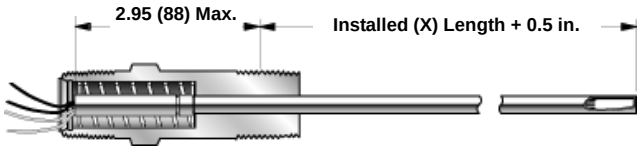

Spring loaded sensor in a relaxed state: Normally, when a spring loaded sensor is measured, it is in a relaxed state. You must subtract 1/2-in. from your measurement to order a replacement sensor. Rosemount Inc. assumes that the sensor length you specify is that of a compressed sensor.

Determining the Length (L) of a spring-loaded sensor to be used with an existing non-Rosemount Thermowell

See Figure 1, Figure 3, and Figure 4.

1. Remove the existing generic sensor from the installed thermowell.
2. Measure the sensor length with the spring in the relaxed state (as shown in Figure 1). Measure from the tip of the sensor to the maximum thread engagement point (0.53 in. into the threads).
3. Subtract 0.5 inches from your measurement. The resulting length is (X).
4. If the sensor is installed with an extension, measure the extension length (E), as shown in Figure 4. If the sensor is not installed with an extension, let (E) = 0.
5. Since (X) = (E) + (L), subtract (E) from (X) to find (L).

Use the resulting length (L) in the Section 2 ordering tables to choose the correct length of sensor.

Length Code Key	
L	Thermowell length minus 0.25 in.
U	Immersion length into process
T	Lagging length
E	Extension fitting length
X	Sensor length

Use the following equations to determine all lengths

L = U + T + 1.5
X = E + L
X = E + U + T + 1.5

Figure 2. Thermowell Dimensions (use with Table 16)

Sensor with Thermowell (no extensions)

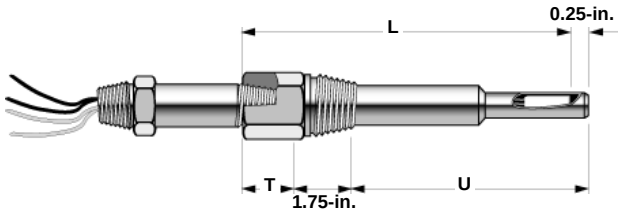

Table 16. Dimensions for thermowells when ordered with sensors (U), (L), and (T). Use with Figure 2.

Dimensions (in.)[1]													
Code	**(U)**	**(L)**	**(T)**		**Code**	**(U)**	**(L)**	**(T)**		**Code**	**(U)**	**(L)**	**(T)**
020	2.0	4.0	0.5		090	9.0	12.0	1.5		160	16.0	18.0	0.5
025	2.5	4.0	0.0		095	9.5	12.0	1.0		165	16.5	18.0	0.0
030	3.0	6.0	1.5		100	10.0	12.0	0.5		170	17.0	21.0	2.5
035	3.5	6.0	1.0		105	10.5	12.0	0.0		175	17.5	21.0	2.0
040	4.0	6.0	0.5		110	11.0	15.0	2.5		180	18.0	21.0	1.5
045	4.5	6.0	0.0		115	11.5	15.0	2.0		185	18.5	21.0	1.0
050	5.0	9.0	2.5		120	12.0	15.0	1.5		190	19.0	21.0	0.5
055	5.5	9.0	2.0		125	12.5	15.0	1.0		195	19.5	21.0	0.0
060	6.0	9.0	1.5		130	13.0	15	0.5		200	20.0	24.0	2.5
065	6.5	9.0	1.0		135	13.5	15.0	0.0		205	20.5	24.0	2.0
070	7.0	9.0	0.5		140	14.0	18.0	2.5		210	21.0	24.0	1.5
075	7.5	9.0	0.0		145	14.5	18.0	2.0		215	21.5	24.0	1.0
080	8.0	12.0	2.5		150	15.0	18.0	1.5		220	22.0	24.0	0.5
085	8.5	12.0	2.0		155	15.5	18.0	1.0		225	22.5	24.0	0.0

(1) L = U + T + 1.5

Ordering a Sensor and a Thermowell

See Figure 2 and Table 16 and Figure 3 and Figure 4. Use the following Procedure to determine if a standard lagging length can be used with the sensor and thermowell.

1. Determine the (U), (T), and (E) lengths necessary for your installation.
   If you do not need an extension, (E) = 0 (zero).
   Note: If your existing sensor/thermowell combination is different than Figure 3, refer to the drawings on the following pages.
2. Find your immersion length (U) on Table 16 above and compare the corresponding lagging length (T) to the lagging length that you previously determined.
3. If your lengths match the values on the line that corresponds to your required immersion length, order your sensor and thermowell together.

   If your lengths do not match the values on the line that corresponds to your measured immersion length, order your sensor and thermowell separately. Solve for (L) using the equation (L) = (U) + (T) + 1.5 (since (L) is required when ordering the sensor separately from the thermowell).

Length Code Key

L	Thermowell length minus 0.25 in.
U	Immersion length into process
T	Lagging length
E	Extension fitting length
X	Sensor length

Use the following equations to determine all lengths

L = U + T + 1.5
X = E + L
X = E + U + T + 1.5

Figure 3. Series 68, 78, and 183 Sensor Assembly Dimensional Drawings

Capsule Sensor Only

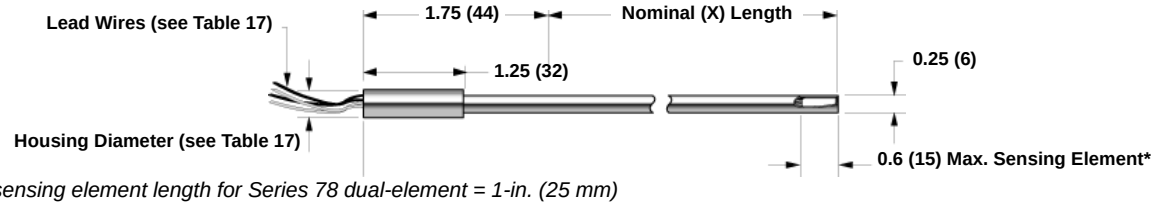

** Maximum sensing element length for Series 78 dual-element = 1-in. (25 mm)*

General Purpose Sensor Assembly

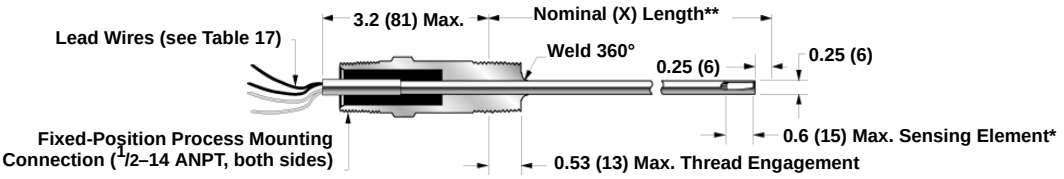

** Maximum sensing element length for Series 78 dual-element = 1-in. (25 mm)*
*** Actual length is 0.25 (6) less to avoid bottoming in thermowell*

Spring Loaded Sensor Assembly

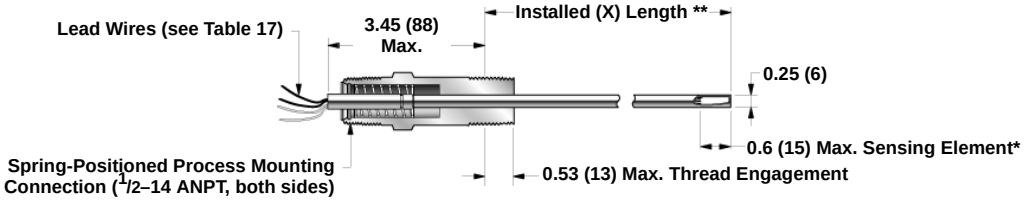

** Maximum sensing element length for Series 78 dual-element = 1-in. (25 mm)*
*** Spring Compressed 0.5 (13)*

Bayonet Spring Loaded Sensor Assembly

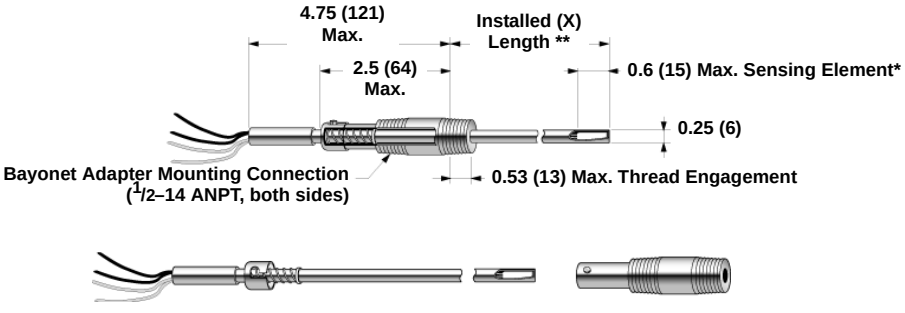

** Spring is shown compressed 0.5 -in.(13 mm.) Do not adjust the equations in Table 17 when calculating X, L, U, and T lengths. The equation already accounts for spring compression.*

Dimensions are in inches (millimeters)

Table 17. Sensor Series and Dimensions

Series	Housing Diameter		Lead Wires	Lead Wire Length	
	in	mm		in	mm
68	0.350	8.0	4	6.0	152.4
78 single	0.350	8.0	4	6.0	152.4
78 dual	0.350	8.0	6	6.0	152.4

Series	Housing Diameter		Lead Wires	Lead Wire Length	
	in	mm		in	mm
183 single	0.375	9.53	2	6.0	152.4
183 dual	0.375	9.53	4	12.0	304.8

Figure 4. Series 68, 78, and 183 Sensor Assembly Length Code Drawings

Sensor with Thermowell (No Extension)

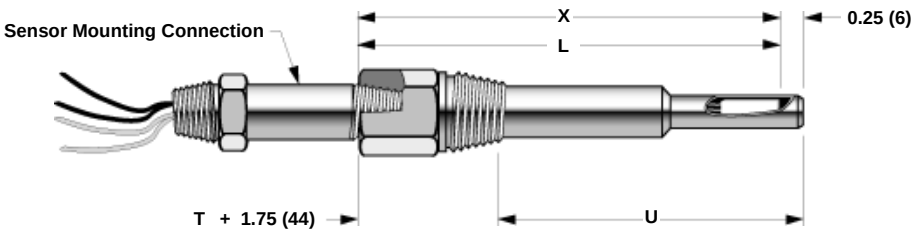

Sensor with Extension (No Thermowell)

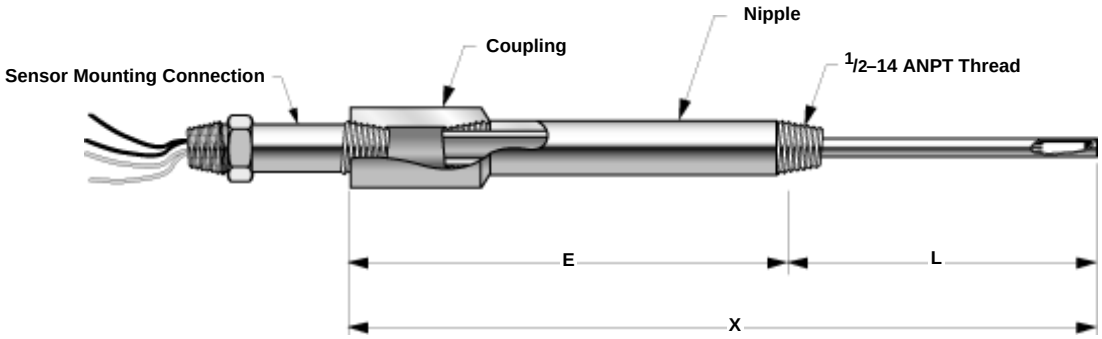

Sensor Installed in Connection Head (Flat Cover) with Union and Nipple Extensions and Thermowell

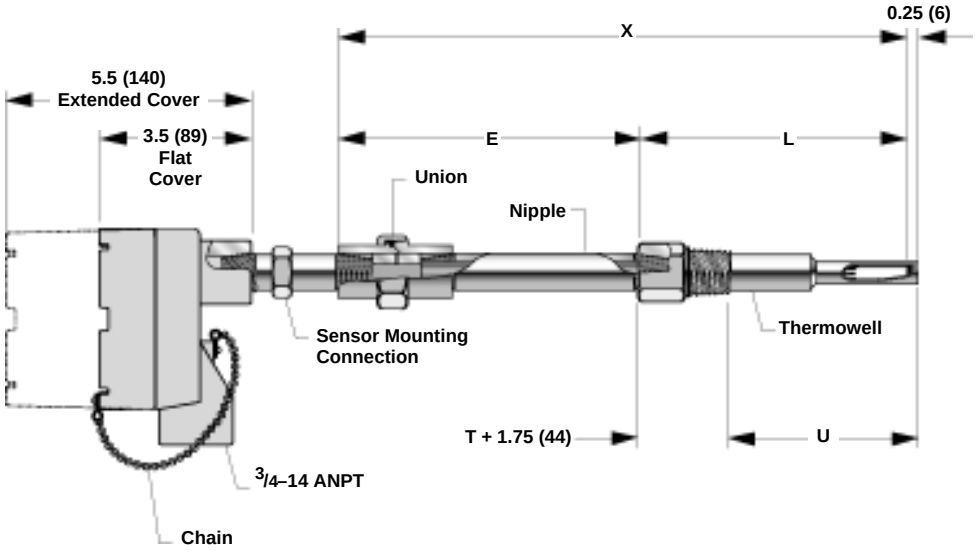

Dimensions are in inches (millimeters)

Threaded Sensors and Assemblies

Series 68, 68Q, and 78 RTD and Series 183 Thermocouple Sensors may be ordered as complete assemblies. These assemblies provide a complete, yet simple means of specifying the proper industrial hardware for most temperature measurements.

One assembly model number, derived from one ordering table, completely defines the type of sensing element, as well as the material, length, and style of both the extension fittings and thermowells. All sensor assemblies are sized and inspected by Emerson Process Management to ensure complete component compatibility and performance.

Figure 5. Individual Components of a Complete Temperature Assembly

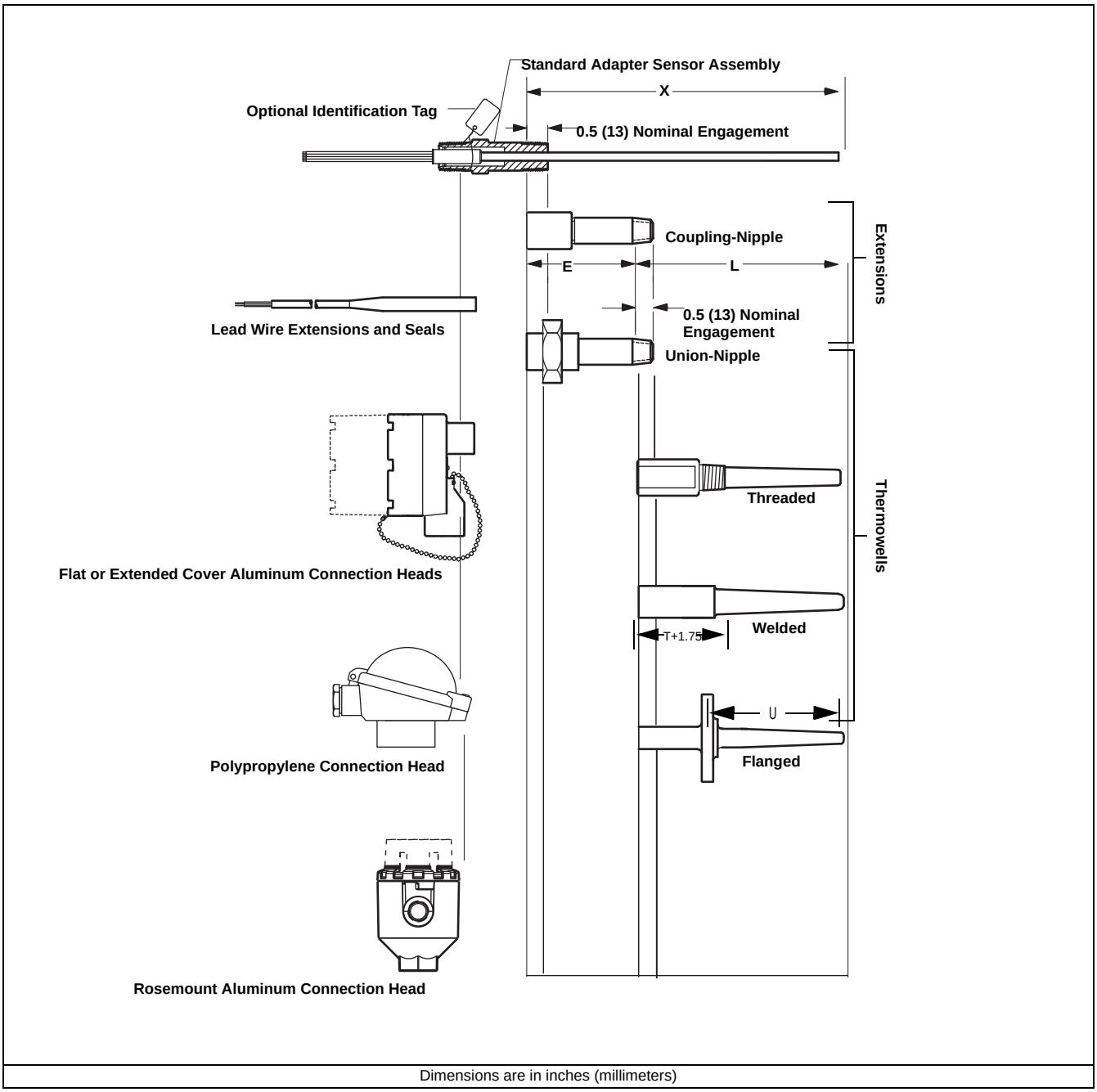

Dimensions are in inches (millimeters)

MOUNTING CONFIGURATIONS

Capsule

Capsules are designed for direct immersion without mounting fittings. Accessory compression fittings are available for adjustable mounting into a thermowell. See Mounting Adapters for Series 58, 68, 78, and 183.

General-Purpose Sensor Assemblies

Designed with a welded, fixed-position 1/2–14 ANPT process connection fitting for direct immersion or thermowell applications, this sensor design provides a moisture-proof and vapor-tight seal. The maximum static working pressure at 20 °C (68 °F) with no vibration or flow condition is 31.59 MPa (3,500 psig). The use of a thermowell is recommended for process pressure containment. Note that standard lengths are 1/4 inch less than nominal dimension to prevent bottoming of the sensor in a thermowell.

Spring-Loaded Sensor Assemblies

Spring-loaded sensors have a spring-positioned, 1/2–14 ANPT process connection fitting that ensures good surface contact in thermowells for faster time response and vibration resistance. Spring-loaded sensors are not intended to provide a process seal. They must be used in conjunction with a thermowell for this purpose.

NOTE
When a spring-loaded sensor is used properly, the spring should be compressed approximately 1/2-inch.

Bayonet Spring-Loaded Sensor Assemblies

Bayonet assemblies have the same advantages as the spring-loaded sensor. However, the bayonet connector permits the sensor to be easily removed from the process without tools.

FIGURE 6. Series 68, 68Q, 78, and 58C Lead Wire Configurations

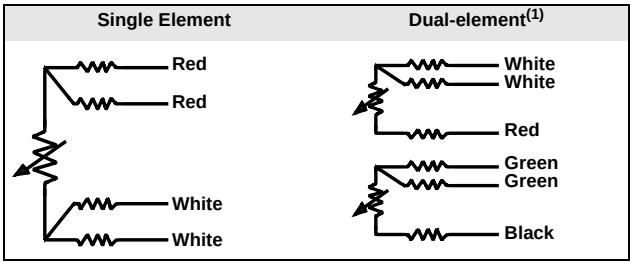

(1) Dual-element sensors are only available on Series 68Q and 78 sensors.

SERIES 68 PLATINUM RTD

Rosemount Series 68 Platinum resistance temperature sensors measure from –50 to 400 °C (–58 to 752 °F). Series 68 Class B, Pt100-385 sensors are available in capsule, general purpose, and spring-loaded designs in sensor lengths from 1 to 48 inches.

Table 18 shows the interchangeability of the Series 68 RTD. As an option, for maximum system accuracy, Emerson Process Management can provide sensor calibration. See Sensor Characterization (Calibration) Schedules– Option Code V. In addition, Emerson Process Management offers optional sensor-to-transmitter matching capability obtainable through the use of Callendar-Van Dusen Constants. See Option Code “V” Callendar-van Dusen Constants.

Table 18. Series 68 Interchangeability

• ±0.55 °C (±0.99 °F) at -50 °C (-58 °F)
• ±0.30 °C (±0.54 °F) at 0 °C (32 °F)
• ±0.80 °C (±1.44 °F) at 100 °C (212 °F)
• ±1.30 °C (±2.34 °F) at 200 °C (392 °F)
• ±1.60 °C (±2.88 °F) at 260 °C (500 °F)
• ±2.30 °C (±4.14 °F) at 400 °C (752 °F)

Construction

FIGURE 7. Construction of a Platinum Thin Film RTD

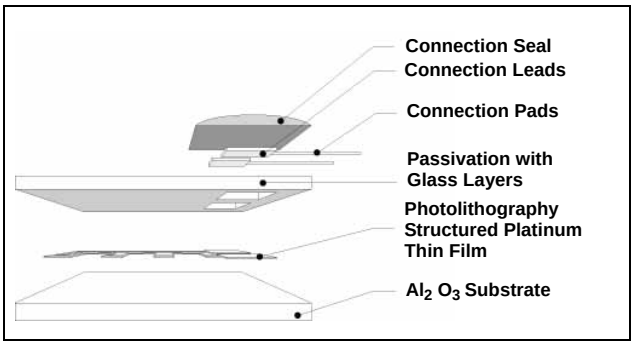

Design and construction of the Series 68 Platinum Sensors provides the optimum combination of accuracy and durability available for temperature measurements. The construction of the sensor allows for direct immersion in non-corrosive fluids at reasonable static pressures. For corrosive environments or many industrial applications, these sensors are widely used with standard thermowell assemblies.

Platinum Element and Lead Wire Configurations

Single-element temperature sensors have four lead wires and may be used in 2-, 3-, and 4-wire signal conditioning systems.

Specifications

Performance

Temperature Range

–50 to 400 °C (–58 to 752 °F)

Effect of Temperature Cycling

±0.05% (0.13 °C or 0.23 °F) maximum ice-point resistance shift following 10 cycles over the specified temperature range.

Stability

±0.11% maximum ice-point resistance shift following 1,000 hours at maximum specified temperature (400 °C).

Maximum Hysteresis

±0.1% of operating temperature range.

Time Constant

12 seconds maximum required to reach 63.2% sensor response in water flowing at 3 ft/s (0.91 m/s).

Nominal R0 100 Ohm

Nominal alpha 0.00385 C-1

Physical Specifications

Sheath Material

316 SST. / 321 SST.

Lead Wire

PTFE insulated, nickel-coated, 22-gauge stranded copper wire.

Identification Data

The model, serial numbers, and up to six lines of permanent tagging information are etched on each sensor. Stainless steel tags are available upon request.

Weight

- Capsule sensors: 5 oz
- General-purpose and spring-loaded sensors: 9 oz

Environmental

Humidity Limits

- Lead seal can withstand 100% relative humidity.

Vibration Limits

- ±0.05% maximum ice-point resistance shift due to 30 minutes of 14 g peak vibration from 5 to 350 Hz at 20 °C (68 °F) for unsupported stem length of less than 6 inches.

Quality Assurance

- Each sensor is subjected to a resistance accuracy test at 0 °C and an insulation resistance test.

Enclosure Ratings

- When installed properly, Rosemount Series 68 sensors are suitable for indoor and outdoor NEMA 4X and CSA Enclosure Type 4X installations. See Hazardous Area Approvals for complete installation information.

Insulation Resistance

1000×10^6 ohms minimum insulation resistance when measured at 500 Vdc at room temperature.

SERIES 78 PLATINUM RTD

Series 78 sensors are intended for applications that require high accuracy, dual-elements, and/or are subjected to high temperatures. Rosemount Series 78 Platinum Resistance temperature sensors measure from –200 to 600 °C (–328 to 1112 °F). These sensors are available in capsule, general-purpose, spring-loaded, and bayonet spring-loaded designs in sensor (X) lengths from 1 to 68 inches.

Table 19 shows the interchangeability of the Series 78 Pt100-385 sensors. The performance of the standard Series 78 sensor conforms to the standard set by IEC 751 Class B. Additionally, IEC-751 Class A accuracy is available as an option. For maximum system accuracy, Emerson Process Management can provide sensor calibration. See Sensor Characterization (Calibration) Schedules– Option Code V. Emerson Process Management also offers optional sensor-to-transmitter matching capability obtainable through the use of Callendar-Van Dusen Constants. See Option Code “V” Callendar-van Dusen Constantsand Option X8Q4: Sensor Calibrated to a Customer-Specified Temperature Range.

The wire-wound design and construction of the General-Purpose Series 78 sensor allows direct immersion in non-corrosive fluids at reasonable static pressures. For corrosive environments and in many industrial applications, these sensors are commonly used with standard thermowell assemblies.

Platinum Element and Lead Wire Configurations

Single-element high-temperature sensors have four lead wires and may be used in 2-, 3-, and 4-wire signal conditioning systems.

Dual-element sensors have redundant elements to provide separate readout and control signals from a single measurement point. Dual-element sensors have three lead wires for each element and may be used with 2- or 3-wire systems. Dual-element sensors can also be wired to be used as compensation loop sensors (see Figure 8).

FIGURE 8. Wiring Configuration of a Dual-Element Sensor to Function as a Single Element Sensor with a Compensation Loop

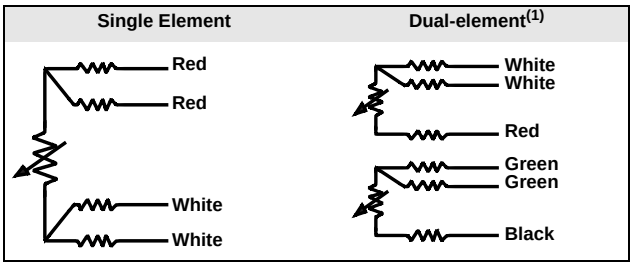

(1) Dual-element sensors are only available on Series 68Q and 78 sensors.

Construction

FIGURE 9. Construction of a Platinum Wire-wound RTD

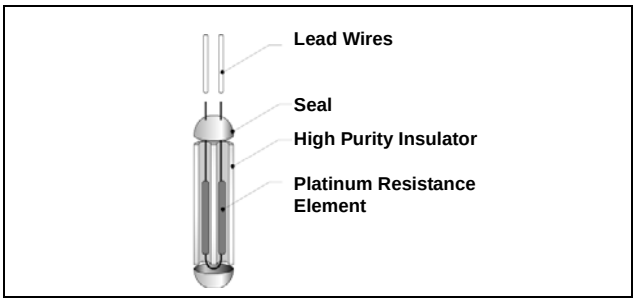

Specifications

Performance

Temperature Range

Series 78 single- and dual-element sensors may be used in temperatures from –200 to 500 °C (–328 to 932 °F). Series 78 single-element high-temperature sensors are provided for high-temperature service over the range of 0 to 600 °C (32 to 1112 °F).

Effect of Temperature Cycling

±0.04% (0.10 °C or 0.18 °F) maximum ice-point resistance shift following 10 cycles between –200 and 500 °C (–328 to 932 °F).

Stability

±0.05% maximum ice-point resistance shift following 1,000 hours at 400 °C (752 °F).

Accuracy

Table 19. Series 78 Interchangeability

Standard Series 78 IEC-751 Class B	Temperature
±0.80 °C (±1.44 °F)	-100 °C (-148 °F)
±0.30 °C (±0.54 °F)	0 °C (32 °F)
±0.80 °C (±1.44 °F)	100 °C (212 °F)
±1.80 °C (±3.24 °F)	300 °C (572 °F)
±2.30 °C (±4.14 °F)	400 °C (752 °F)
Series 78 with IEC-751 Class A Option	**Temperature**
±0.35 °C (±0.63 °F)	-100 °C (-148 °F)
±0.15 °C (±0.27 °F)	0 °C (32 °F)
±0.35 °C (±0.63 °F)	100 °C (212 °F)
±0.75 °C (±1.35 °F)	300 °C (572 °F)
±0.95 °C (±1.71 °F)	400 °C (752 °F)

Maximum Hysteresis

- Single- and dual-element, Nominal R0 100 Ohm Nominal alpha 0.00385 Ω/Ω °C.
- Single-element, high temperature: ±0.1% of range.

Time Constant

4 seconds maximum required to reach 63.2% sensor response in water flowing at 3 ft/s (0.91 m/s), 9.5 seconds for single-element high-temperature sensors.

Self Heating

18 mW minimum power dissipation required to cause a 1 °C (1.8 °F) temperature measurement error in water flowing at 3 ft/s, 25 mW for single-element high temperature sensors.

Insulation Resistance

500×10^6 ohms minimum insulation resistance when measured at 500 Vdc at room temperature [20 °C (68 °F)]. Single element high-temperature sensors are measured at 100 Vdc.

Environmental

Humidity Limits

Lead seal is capable of withstanding 100% relative humidity.

Vibration Limits

Standard single- and dual-element sensors:

- ±0.03% maximum ice-point resistance shift due to 30 minutes of 21 g peak vibration from 5 to 350 Hz continuous sweep at 20 °C (68 °F) for unsupported stem length of less than 5.5 inches (140 mm).

Single-element high-temperature sensors:

- Meet ASTM E 1137-95. Cycling time is 3 hours per longitudinal axis, less the time spent at resonant dwells at the axis, from 5 to 500 Hz. The test level is 1.27 mm (0.05 in.) double amplitude displacement or peak g-level of 3, whichever is less.

Quality Assurance

Each sensor is subjected to a resistance accuracy test at 0 °C and an insulation resistance test.

Enclosure Ratings

When installed properly, Rosemount Series 78 sensors are suitable for indoor and outdoor NEMA 4X and CSA Enclosure Type 4X installations. See Hazardous Area Approvals for complete installation information.

Physical Specifications

Sheath Material

316 SST

Lead Wires

PTFE-insulated, nickel-coated, 22-gauge stranded copper wire.

Identification Data

The model and serial numbers and up to six lines of permanent tagging information are etched on each sensor. Stainless steel tags are available upon request.

Weight

- Capsule sensors: 5 oz
  General purpose and spring-loaded sensors: 9 oz

SERIES 183 THERMOCOUPLE

Rosemount Series 183 Thermocouple sensors measure from –180 to 1150 °C (–292 to 2102 °F).

Construction

The Series 183 Thermocouples are manufactured using ISA Type J, K, E, or T wire with “special limits of error” accuracy. The junction of these wires is fusion-welded to form a pure joint, to maintain the integrity of the circuit, and to ensure the highest accuracy. Grounded junctions are available for improved response time and good thermal contact with protection from the environment. The ungrounded and isolated junctions provide electrical isolation from the sensor sheath (see Figure 10).

Rosemount thermocouples are encased in a protective metal sheath. The sheath material is 304 SST for types J, E, and T, used at temperatures up to 871 °C and Inconel for type K, used at temperatures up to 1150 °C. Metallic oxide insulation is compacted into the sheath to mechanically support and electrically insulate the thermocouple wire. See Table 20 for more information on the different types of thermocouples.

FIGURE 10. Series 183 Junction Configurations

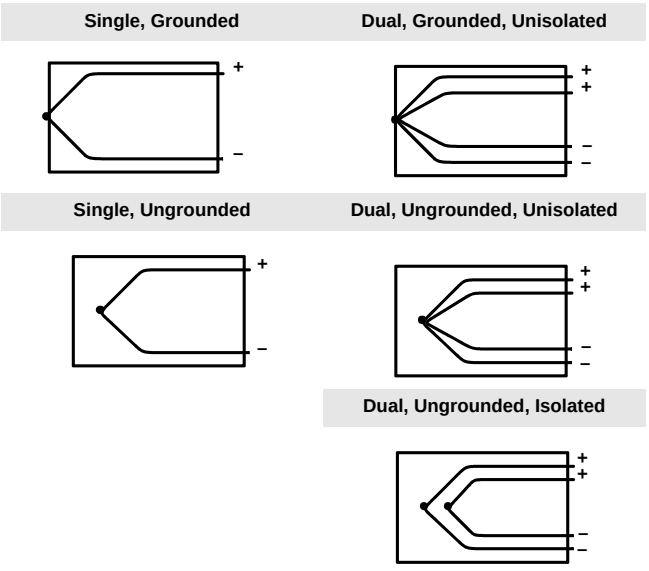

FIGURE 11. Series 183 Lead Wire Configurations

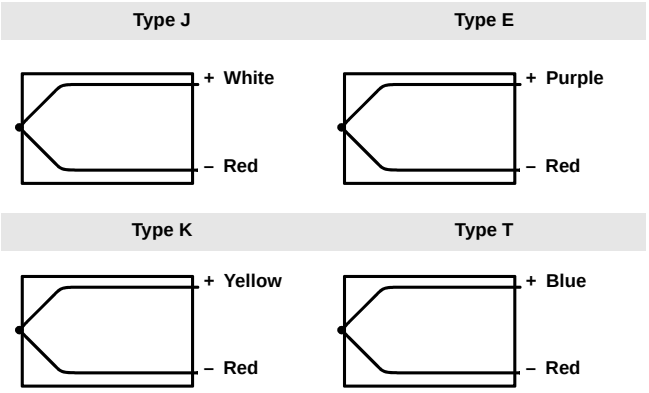

Specifications

Performance Specifications

The thermoelectric current relationship in a thermocouple is standardized and defined by ASTM E-230. All Series 183 Thermocouples conform to these standards with “special limits of error” accuracy. The particular characteristics of each ISA type thermocouple are outlined in Table 20.

Physical

Sheath Material

304 SST for types J, E, and T (used at temperatures up to 871 °C). Inconel for type K (used at temperatures up to 1150 °C).

Lead Wires

Thermocouple, internal—16 AWG solid wire (max), 18 AWG solid wire (min.). External lead wires—20 AWG wire, PTFE-insulated. Color coded per lead wire configuration schematic shown in Figure 11.

Identification Data

The model and serial numbers and up to six lines of permanent tagging information are etched on each sensor. Stainless steel tags are available upon request.

Weight

Capsule sensors: 5 ounces. General-purpose and spring-loaded sensors: 9 ounces.

Insulation Resistance

100×10^6 ohms minimum insulation resistance when measured at 100 Vdc at room temperature.

Enclosure Ratings

When installed properly, Rosemount Series 183 sensors are suitable for indoor and outdoor
NEMA 4X and CSA Enclosure Type 4X installations. See Hazardous Area Approvals for complete installation information.

Comparison of Thermocouples

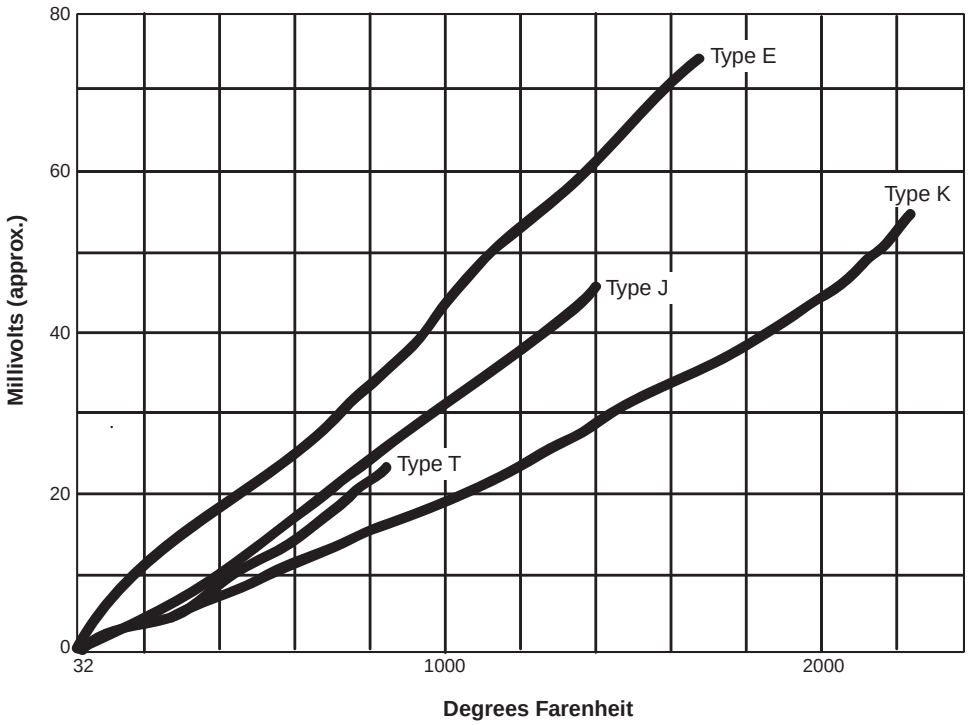

Thermocouple	Conditions for Use
Type J Iron / Constantan	Maximum operating temperature of 760 °C (1400 °F). Used with or without protective tubing where deficiency of free oxygen exists. Protective tube not essential, but desirable for cleanliness and longer service.
Type K Chromel / Alumel	Suitable for extended use in temperatures reaching 1150 °C (2102 °F). Use of metal or ceramic protective tube desirable, especially in reducing atmospheres. In oxidizing atmospheres, protective tubing necessary only to promote cleanliness and longer service.
Type E Chromel / Constantan	Suitable for use at temperature up to 900 °C (1652 °F) in vacuum or inert, mildly oxidizing, or reducing atmosphere. Not subject to corrosion at cryogenic temperatures. Has highest EMF output per degree of all commonly used thermocouples.
Type T Copper /Constantan	Operating temperature range of –180 to 371 °C (–292 to 700 °F). Use in either oxidizing or reducing atmospheres. Protective tubing necessary only to promote cleanliness and longer service. Stable at lower temperature. Superior for a wide variety of uses in cryogenic temperatures.

Table 20. Characteristics of Series 183 Thermocouple Types

ISA Thermocouple Types	Thermocouple Wire Alloys	Temperature Range		Limits of Error (Interchangeability)
		°C	°F	
J	Iron/Constantan	0 to 760	32 to 1400	±1.1 °C or ±0.4% of measured temperature, whichever is greater
K	Chromel/Alumel	0 to 1150	32 to 2102	±1.1 °C or ±0.4% of measured temperature, whichever is greater
E	Chromel/Constantan	0 to 871	32 to 1600	±1.0 °C or ±0.4% of measured temperature, whichever is greater
T	Copper/Constantan	–180 to 0	–292 to 32	±1.0 °C or ±1.5% of measured temperature, whichever is greater
		0 to 371	32 to 700	±0.5 °C or ±0.4% of measured temperature, whichever is greater

SERIES 68Q SANITARY PLATINUM RTD

Rosemount Series 68Q sanitary RTD temperature sensors measure from –50 to 200 °C (–58 to 392 °F). Series 68Q sensors are available in Tri-Clamp® endcap designs in immersion lengths from 1.0 to 9.5 inches. Table 21 shows the interchangeability of the Series 68Q sensor.

Accuracy

Table 21. Series 68Q Interchangeability (IEC 751 Class B)

±0.55 °C (±0.99 °F) at –50 °C (–58 °F)
±0.30 °C (±0.54 °F) at 0 °C (32 °F)
±0.80 °C (±1.44 °F) at 100 °C (212 °F)
±1.30 °C (±2.34 °F) at 200 °C (392 °F)

Construction

Series 68Q sensors conform to 3-A Sanitary Standards and feature product contact surfaces designed for CIP cleaning. The response times of Series 68Q sensors meet the Grade A Pasteurized Milk Ordinance (PMO) specification for thermometric response of an indicating thermometer on a pipeline.

Series 68Q sensors are offered in a Tri-Clamp sanitary endcap configuration. The sensor capsule is welded into the 316 SST sanitary endcap/stem assembly. The product contact of this assembly is polished to a finish that exceeds No. 4 minimum finish as required by the 3–A Sanitary Council Standard #74-02.

Platinum Element and Lead Wire Configurations

Single-element temperature sensors have four lead wires and may be used in 2-, 3-, and 4-wire signal conditioning systems. Dual-element sensors have six lead wires and may be used in 2- and 3-wire signal conditioning systems.

SPECIFICATIONS

Performance

Temperature Range

–50 to 200 °C (–58 to 392 °F)

Maximum Hysteresis

±0.09% of operating temperature range

Stability

Tri-clamp O.D. Tube Size 1-in. and greater:

±0.04% maximum ice-point resistance shift following 1,000 hours at maximum specified temperature 392 °F (200 °C).

Tri-clamp O.D. Tube Size $^1/_2$ - $^3/_4$-in.:

±0.08% maximum ice-point resistance shift following 1,000 hours at maximum specified temperature 392 °F (200 °C).

Response Time

Tri-clamp O.D. Tube Size 1-in. and greater

Less than 3.5 seconds required to reach 63.2% sensor response in water flowing at 3 ft/s (0.91 m/s). Meets PMO specification

Tri-clamp O.D. Tube Size $^1/_2$ - $^3/_4$-in.:

Less than 1.5 seconds required to reach 63.2% sensor response in water flowing at 3 ft/s (0.91 m/s).

Insulation Resistance

500×10^6 ohms minimum insulation resistance when measured at 100 Vdc at room temperature

Surface Finish

$32R_A$ standard finish on product contact surfaces. Meets 3-A requirements.

$15R_A$ high mechanical polish available with option code HP.

Environmental

Humidity Limits

Lead seal is capable of withstanding 100% relative humidity

Quality Assurance

Each sensor is subjected to a resistance accuracy test at 0 °C

Physical Specifications

Sheath Material

316 SST

Lead Wire

PTFE-insulated, nickel-coated, 24-gauge stranded copper wire

Identification Data

The model and serial numbers and up to six lines of permanent tagging information are etched on each sensor. Stainless steel tags are available upon request.

Weight

0.6 to 2.0 lb (0.3 to 0.9 kg)

Dimensional Drawings

Figure 12. 68Q Sanitary Sensor and Polypropylene Connection Head Dimensional Drawings

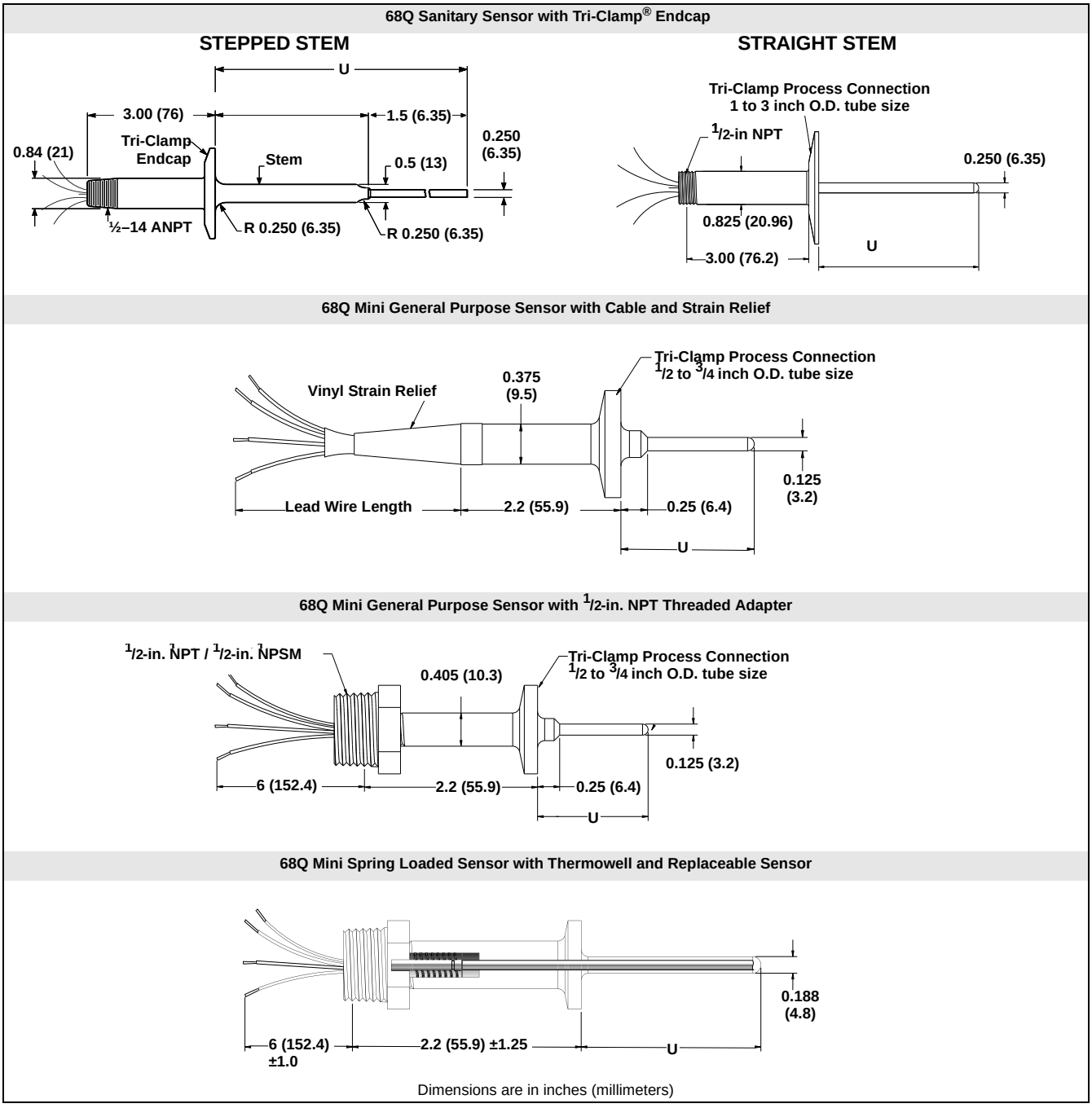

Dimensions are in inches (millimeters)

Table 22. Series 68Q Spare Parts List

Mini Spring-Loaded Sanitary Replacement Sensors and Thermowells		
Immersion Length (U)	**Replacement Sensor Part Number**	**Replacement Thermowell Part Number**
2.0	00068-4035-0020	00068-4035-1020
2.5	00068-4035-0025	00068-4035-1025
3.0	00068-4035-0030	00068-4035-1030

SERIES 58C PLATINUM RTD

Rosemount Series 58C sensors are available in 12-, 24-, 36-, and 48-inch (X) lengths and may be shortened to any desired length with an ordinary tubing cutter. This cut-to-fit feature eliminates the need to stock a large selection of sensors in many specific lengths. Table 23 shows the interchangeability of the Series 58C Sensor.

Table 23. Series 58C Interchangeability (IEC 751 Class B)

±0.55 °C (±0.99 °F) at –50 °C (–58 °F)
±0.30 °C (±0.54 °F) at 0 °C (32 °F)
±0.80 °C (±1.44 °F) at 100 °C (212 °F)
±1.30 °C (±2.34 °F) at 200 °C (392 °F)

Specifications

Performance Specifications

Temperature Range

–50 to 200 °C (–58 to 392 °F)

Maximum Hysteresis

±0.09% of operating temperature range.

Stability

±0.035% maximum ice-point resistance shift following 1,000 hours at maximum specified temperature (200 °C).

Insulation Resistance

500×10^6 ohms minimum insulation resistance when measured at 50 Vdc at room temperature.

Environmental Specifications

Humidity Limits

No permanent rear seal is installed

Quality Assurance

Each sensor is subjected to a resistance accuracy test at 0 °C and an insulation resistance test

Physical Specifications

Sheath Material

316 SST

Lead Wires

PTFE-insulated, nickel-coated, 24-gauge stranded copper wire

Dimensional Drawings

Series 58C Sensor

Do not cut all the way through the sensor sheath when cutting the sensor to length. Damage to the sensor wires could result. To prevent damage to the sensor wires, score the sheath considerably with a tubing cutter and gently break off the excess.

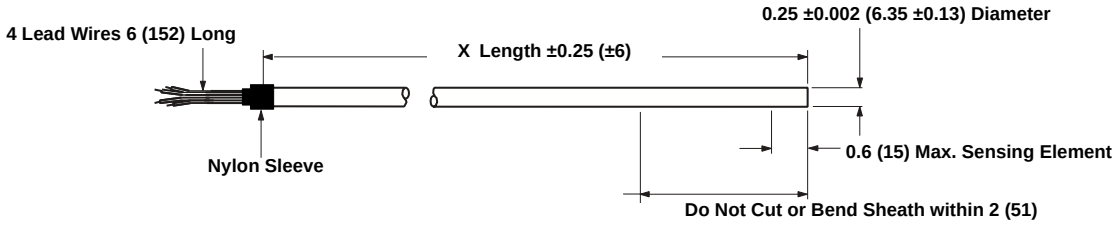

Option Code SNN Spring-Loaded Fitting
303 SST. 1/2–14 ANPT

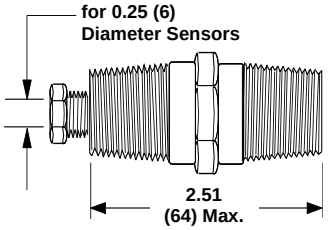

Option Codes C01, C02, Swagelok Compression Fitting
316 SST. 1/2–14 ANPT

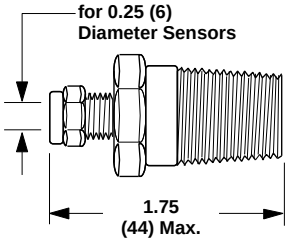

Dimensions are in inches (millimeters)

Calibration

CALIBRATION OPTIONS

Sensor calibration may be required for input to quality systems, or for control system enhancement. More frequently, it is used to improve the overall temperature measurement performance by matching the sensor to a temperature transmitter. Transmitter-Sensor matching is available for RTD sensors used with Rosemount 644, 3144P, and 3244MV temperature transmitters where the inherent stability and repeatability of the RTD technology is well established.

Transmitter-Sensor Matching Using Callendar-Van Dusen Constants

Significant temperature measurement accuracy improvement can be attained using a temperature sensor that is matched to a temperature transmitter. This matching process entails *teaching* the temperature transmitter the relationship between resistance and temperature for a specific RTD sensor. This relationship, approximated by the Callendar-Van Dusen equation, is described as:

$R_t = R_o + R_o\alpha[t - \delta(0.01t - 1)(0.01t) - \beta(0.01t - 1)(0.01t)^3]$, where:

R_t = Resistance (ohms) at Temperature t (°C)
R_o = Sensor-Specific Constant (Resistance at t = 0 °C)
α =Sensor-Specific Constant
δ =Sensor-Specific Constant
β =Sensor-Specific Constant (0 at t > 0 °C, 0.11 at t < 0°C)

The exact values for R_0, α, δ, β, – known as Callendar-Van Dusen (CVD) constants – are specific to each RTD sensor, and are established by testing each individual sensor at various temperatures.

The calibration temperature values using the CVD equation are divided into two major temperature areas: above 0 °C and below 0 °C. The calibration for the temperature range between 0 and 660 °C is obtained from the following formula:

$$R_t = R_0\left\{1 + \alpha\left[t - \delta\left(\frac{t}{100}\right)\left(\frac{t}{100} - 1\right)\right]\right\}$$

Note that this is a modification of the fourth-order CVD equation where $\beta = 0$ for temperatures greater than 0 °C. Since this modified equation is a second-order degree equation, at least three distinct temperature values are needed in order to curve fit the behavior of the RTD. For the temperature range from 0 to 100 °C, only these two end points are used, and an approximation is made to render the constants.

Once the sensor-specific constants are entered, the transmitter uses them to generate a custom curve to best describe the relationship between resistance and temperature for the particular sensor and transmitter system. Matching a Series 68 or 78 RTD sensor to a 644, 3144P, and 3244MV transmitter typically results in a 3- or 4-fold improvement in temperature measurement accuracy for the total system. This substantial system accuracy improvement is realized as a result of the transmitter's ability to use the sensor's *actual* resistance-vs.-temperature curve instead of an *ideal* curve.

An example of the benefits of using the sensor matching capability of a Rosemount 3144P Temperature transmitter along with a matched Series 68 RTD sensor are shown in Typical Transmitter-Sensor Matching Uncertainty Improvements.

Calibration Uncertainty

Calibration uncertainties of the lab are equal to or better than $^1/_{10}$ IEC 751 Class B interchangeability:

$$\textbf{Uncertainty} = \mathbf{0.03} + \mathbf{0.0005} \times |t|$$

$|t|$ = *absolute value of temperature in °C*

TYPICAL TRANSMITTER-SENSOR MATCHING UNCERTAINTY IMPROVEMENTS

Transmitter: 3144 (has built-in sensor matching capabilities), span of 1 to 200 °C, accuracy = 0.1 °C)

Sensor: Series 68 RTD

Callendar van Dusen Option: V2
Process Temperature: 150 °C

Temperature		Sensor Interchangeability Error		Total Calibrated Sensor Uncertainty(1)	
°C	°F	°C	°F	°C	°F
0	32	±0.30	±0.54	±0.10	±0.18
50	122	±0.55	±0.99	±0.17	±0.31
100	212	±0.80	±1.44	±0.22	±0.40
150	302	±1.05	±1.89	±0.18	±0.32
200	392	±1.30	±2.34	±0.16	±0.29

(1) Includes calibration uncertainties of the lab, hysteresis, and repeatability.

System Uncertainty Comparison at 150 °C:

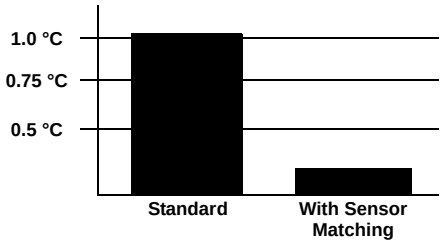

Standard 68 Sensor	
Rosemount 3144:	± 0.10 °C
Standard Series 68 RTD:	± 1.05 °C
Total System(1):	± 1.05 °C
68 Sensor with V2 Option	
Rosemount 3144:	± 0.10 °C
Standard Series 68 RTD:	± 0.18 °C
Total System(1):	± 0.21 °C

(1) Calculated using RSS statistical method:

$$SystemAccuracy = \sqrt{(TransmitterAccuracy)^2 + (SensorAccuracy)^2}$$

ORDERING INFORMATION

Sensor Characterization (Calibration) Schedules– Option Code V

Series 68, 68Q, and 78 RTD sensors can be ordered with an option (V1, V2,...V7, see Option Code “V” Callendar-van Dusen Constants), that provides Callendar-Van Dusen constants that are shipped with the sensor. When you order this option, the values of all four sensor-specific constants are physically attached to each sensor with a wire-on tag. Rosemount 644, 3144P, and 3244MV have a unique, built-in sensor matching capability. To use this capability, the four sensor-specific constants are programmed into the 644, 3144P, and 3244MV at the factory by ordering a C2 option on the transmitter, or easily entered and changed in the field using a Field Communicator or AMS. When these values are entered into a Rosemount 644, 3144P, and 3244MV, the sensor and transmitter become *matched.*

Each “V” option is specific to a particular temperature range for a given sensor type (see Option Code “V” Callendar-van Dusen Constants). As with option code X8Q4, the accuracies associated with each option code represent worst-case conditions when the sensor is used over the entire temperature range.

For applications requiring the increased accuracy obtainable through a matched sensor and transmitter, order the appropriate “V” option (see Option Code “V” Callendar-van Dusen Constants). To ensure optimal performance, select a “V” option such that the sensor’s range of actual operation is between the minimum and maximum calibration points.

The accuracy (uncertainty) of different calibration points varies because each calibration schedule has specific hysteresis and repeatability characteristics. For example, the accuracy of calibration points at 100 °C for options V1 and V2 differs because of the two different temperature ranges.

NOTE
An RTD ordered with the V option is shipped with CVD constants only; it does not include calibration tables.

OPTION CODE “V” CALLENDAR-VAN DUSEN CONSTANTS

Option Code	Temperature Range		Calibration Points		Uncertainty(1) of Calibration Lab		Total Uncertainty(2) of Calibrated Sensor					
							Series 68		Series 78 Standard		Series 78 High Temperature	
	°C	°F	°C	°F	°C	°F	°C	°F	°C	°F	°C	°F
V1(3)	0 to 100	32 to 212	0	32	±0.03	±0.05	±0.06	±0.11	±0.06	±0.11	±0.06	±0.11
			100	212	±0.08	±0.14	±0.10	±0.18	±0.10	±0.18	±0.10	±0.18
V2(3)	0 to 200	32 to 392	0	32	±0.03	±0.05	±0.10	±0.18	±0.09	±0.16	±0.10	±0.18
			100	212	±0.08	±0.14	±0.22	±0.40	±0.15	±0.27	±0.23	±0.41
V3(3)	0 to 400	32 to 752	200	392	±0.13	±0.23	±0.16	±0.29	±0.15	±0.27	±0.16	±0.29
			0	32	±0.03	±0.05	±0.20	±0.29	±0.16	±0.29	±0.20	±0.29
			200	392	±0.13	±0.23	±0.42	±0.76	±0.29	±0.52	±0.44	±0.79
			400	752	±0.23	±0.41	±0.30	±0.54	±0.28	±0.50	±0.30	±0.54
V4(3)(4)	0 to 600	32 to 1112	0	32	±0.03	±0.05	NA	±NA	NA	NA	NA	NA
			200	392	±0.13	±0.23	NA	±NA	NA	NA	NA	NA
			400	752	±0.23	±0.41	NA	±NA	NA	NA	NA	NA
V5(3)	–50 to 100	–58 to 212	0	32	±0.03	±0.05	±0.08	±0.14	±0.06	±0.11	±0.09	±0.16
			100	212	±0.08	±0.14	±0.10	±0.18	±0.10	±0.18	±0.10	±0.18
V6(3)	–50 to 200	–58 to 392	–50	–58	±0.06	±0.10	±0.14	±0.25	±0.11	±0.20	±0.14	±0.25
			0	32	±0.03	±0.05	±0.20	±0.36	±0.14	v0.25	±0.21	±0.38
			100	212	±0.08	±0.14	±0.26	±0.47	±0.18	±0.32	±0.27	±0.49
			200	392	±0.13	±0.23	±0.18	±0.32	±0.16	±0.29	±0.17	±0.3
V7(3)	–50 to 400	–58 to 752	–50	–58	±0.06	±0.10	±0.23	±0.41	±0.19	±0.34	±0.23	±0.41
			0	32	±0.03	±0.05	±0.31	±0.56	±0.22	±0.40	±0.32	±0.58
			200	392	±0.13	±0.23	±0.46	±0.83	±0.31	±0.56	±0.48	±0.86
			400	752	±0.23	±0.41	±0.32	±0.58	±0.29	±0.52	±0.32	±0.58

(1) Includes only the uncertainty of the lab.

(2) Includes the uncertainty of the lab, hysteresis, and repeatability.

(3) Uncertainties are valid for option code X8Q4 when ordered with the corresponding temperature range. The largest error shown in each temperature range is the worst case error for all points not shown in that range.

(4) Only available with Series 78 High Temperature Sensors 10-in. or longer.

Ordering Information

Specify Sensor Model Number with “V” Option Example								
Sensor Model	0068	N	11	N	00	N	120	V2

Figure 13. Typical Sensor Ordered with Option Code V

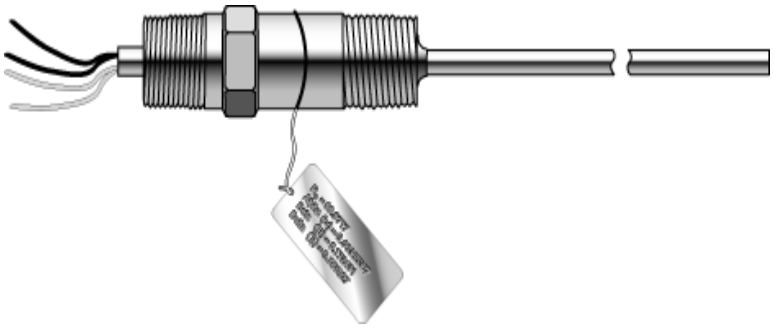

Option Code X8Q4

The X8Q4 option calibrates the sensor to a customer-specified temperature range. The X8Q4 report includes the Callendar-Van Dusen (CVD) constants (R_0, α, δ, β), a resistance-versus-temperature table in one-degree increments, and a graph which includes the maximum errors due to the uncertainty of the calibration equipment, hysteresis, and repeatability. The values in the tables are calculated using Callendar-Van Dusen methodology. Two of the values on this table could be used to perform a two-point trim. The X8Q4 option also provides the CVD constants on a stainless steel tag attached to the sensor.

See Figure 14.

FIGURE 14. Graph of a Typical Two-point Trim

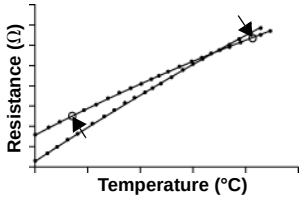

A two-point trim shifts the ideal curve up or down, and changes the slope based on the two characterized points.

Option X8Q4: Sensor Calibrated to a Customer-Specified Temperature Range

When you order an RTD with the X8Q4 option, you must specify a temperature range over which the sensor is to be calibrated. Before specifying the range, take careful note of the sensor temperature limits.

Ordering Example:

	Model	Lead Wire Termination	Sensor Type	Extension Type	Extension Length	Thermowell Material	Immersion Length	Additional Options
Typical Model Number	0068	N	11	N	00	N	045	X8Q4 X8X9Q4

If X8Q4 and X9Q4 are both required, do not repeat the “Q4” code in the model string. Include the following instead:

Calibrate from –10 to 120 °C

Option Code X9Q4

The X9Q4 option calibrates the sensor at a single customer-specified point. A calibration certificate with the resistance value at this point is supplied. This value could be used to perform a one-point trim on the transmitter. All characterizations are traceable to the National Institute of Standards and Technology (NIST). The calibration table is dated and marked with the sensor series and serial number.

See Figure 15.

NOTE
The X9Q4 option can be ordered and used in conjunction with the X8Q4 option.

FIGURE 15. Graph of a Typical One-point Trim

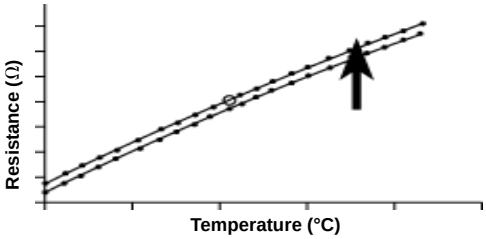

A one-point trim shifts the ideal curve up or down based on the single characterized point.

Option X9Q4: Sensor Calibrated to a Customer-Specified Single Point

When you order an RTD with the X9Q4 option, you must specify a single temperature point at which the sensor is to be calibrated. Before specifying the point, take careful note of the sensor temperature limits.

Ordering Example:

	Model	Lead Wire Termination	Sensor Type	Extension Type	Extension Length	Thermowell Material	Immersion Length	Additional Options
Typical Model Number	0068	N	11	N	00	N	045	X9Q4

If X8Q4 and X9Q4 are both required, do not repeat the “Q4” code in the model string. Include the following instead: X8X9Q4 Calibrate at 50 °C

Table 24. Option Code X9Q4 Calibration Uncertainties for the Series 68 and 78 Standard and High Temperature

Temperature		Uncertainty of Calibration Lab(1)		Total Uncertainty of Calibrated Sensor(2)	
°C	°F	°C	°F	°C	°F
–50	–58	0.06	0.10	0.07	0.13
0	32	0.03	0.05	0.06	0.11
100	212	0.08	0.14	0.09	0.16
200	392	0.13	0.23	0.14	0.25
400	752	0.23	0.41	0.24	0.43

(1) Includes only the uncertainty of the lab.

(2) Includes uncertainty of the lab and repeatability.

Table 25. Resistance vs. Temperature

IEC 751 Platinum 100, α = 0.00385 RTD														
°F	Ohms		°F	Ohms		°F	Ohms		°C	Ohms		°C	Ohms		°C	Ohms
–330	18.04		210	138.08		690	235.15		–200	18.52		90	134.71		380	240.18
–320	20.44		220	140.19		700	237.09		–190	22.83		100	138.51		390	243.64
–310	22.83		230	142.29		710	239.02		–180	27.10		110	142.29		400	247.09
–300	25.20		240	144.39		720	240.95		–170	31.34		120	146.07		410	250.53
–290	27.57		250	146.49		730	242.87		–160	35.54		130	149.83		420	253.96
–280	29.93		260	148.58		740	244.79		–150	39.72		140	153.58		430	257.38
–270	32.27		270	150.67		750	246.71		–140	43.88		150	157.33		440	260.78
–260	34.61		280	152.75		760	248.62		–130	48.00		160	161.05		450	264.18
–250	36.94		290	154.83		770	250.53		–120	52.11		170	164.77		460	267.56
–240	39.26		300	156.91		780	252.44		–110	56.19		180	168.48		470	270.93
–230	41.57		310	158.98		790	254.34		–100	60.26		190	172.17		480	274.29
–220	43.88		320	161.05		800	256.24		–90	64.30		200	175.86		490	277.64
–210	46.17		330	163.12		810	258.14		–80	68.33		210	179.53		500	280.98
–200	48.46		340	165.18		820	260.03		–70	72.33		220	183.17		510	284.30
–190	50.74		350	167.24		840	263.80		–60	76.33		230	186.84		520	287.62
–180	53.02		360	169.30		850	265.68		–50	80.31		240	190.47		530	290.92
–170	55.29		370	171.35		860	267.56		–40	84.27		250	194.10		540	294.21
–160	57.55		380	173.40		870	269.44		–30	88.22		260	197.71		550	297.49
–150	59.81		390	175.45		880	271.31		–20	92.16		270	201.31		560	300.74
–140	62.06		400	177.49		890	273.17		–10	96.09		280	204.90		570	304.01
–130	64.30		410	179.53		900	275.04		0	100.00		290	208.48		580	307.25
–120	66.54		420	181.56		910	276.90		10	103.90		300	212.05		590	310.49
–110	68.77		430	183.59		920	278.75		20	107.79		310	215.61		600	313.71
–100	71.00		380	173.40		930	280.61		30	111.67		320	219.15		610	316.92
–90	73.22		390	175.45		940	282.46		40	115.54		330	222.68		620	320.12
–80	75.44		400	177.49		950	284.30		50	119.40		340	226.21		630	323.30
–70	77.66		410	179.53		960	286.14		60	123.24		350	229.72		640	326.48
–60	79.86		420	181.56		970	287.98		70	127.08		360	233.21		650	329.64
–50	82.07		430	183.59		980	289.82		80	130.90		370	236.70		660	332.79
–40	84.27		450	187.65		990	291.65									
–30	86.47		460	189.67		1000	293.48									
–20	88.66		470	191.68		1010	295.30									
–10	90.85		480	193.70		1020	297.12									
0	93.03		490	195.71		1030	298.94									
10	95.21		500	197.71		1040	300.75									
20	97.39		510	199.71		1050	302.56									
30	99.57		520	201.71		1060	304.37									
40	101.74		530	203.71		1070	306.17									
50	103.90		540	205.70		1080	307.97									
60	106.07		550	207.69		1090	309.77									
70	108.23		560	209.67		1100	311.56									
80	110.38		570	211.66		1110	313.35									
90	112.53		580	213.63		1120	315.14									
100	114.68		590	215.61		1130	316.92									
110	116.83		600	217.58		1140	318.70									
120	118.97		610	219.55		1150	320.47									
130	121.11		620	221.51		1160	322.24									
140	123.24		630	223.47		1170	324.01									
150	125.37		640	225.42		1180	325.77									
160	127.50		650	227.38		1190	327.53									
170	129.62		660	229.33		1200	329.29									
180	131.74		670	231.27		1210	331.04									
190	133.86		680	233.21												
200	135.97															

Note

To convert from °C to °F: {1.8 X (°C)] + 32 = °F
Example: (1.8 X 100) + 32 = 212 °F

To convert from °F to °C: 0.556 [(°F) – 32] = 100 °F
Example: 0.556 (212 – 32) = 100 °C

Mounting Accessories

ROSEMOUNT CONNECTION HEAD

The Rosemount Connection head is for general-purpose and spring-loaded sensors. The terminal block has six terminals for either single or dual element sensors. If the sensor assembly is ordered assembled to a Rosemount 248 or 644H head mount transmitter, then the terminal block is replaced by the transmitters.

Specifications

Sensor Connection

- 1/2–14 ANPT mounting thread. Screw terminals for lead wire connections.

Electrical Connection

- 1/2–14 ANPT conduit

Materials of Construction

- Housing: Low copper aluminum
- Paint: Polyurethane
- Cover O-ring: Buna-N

Weight

- 18.5 oz (524 g)

Enclosure Rating

- NEMA 4X, IP66, and IP68

POLYPROPYLENE CONNECTION HEAD

The polypropylene connection head (part number 00644-4198-0011) is designed for use with sanitary sensors. It is FDA-compliant, and is resistant to attack by acids, alkalies, and organic solvents.

Specifications

Sensor Connection

- 1/2–14 NPT mounting thread. Screw terminals for lead wire connections

Electrical Connection

- 1/2–14 NPT conduit

Materials of Construction

- Housing: White polypropylene polymer
- O-Ring Seal: Silicone rubber
- Terminals: Nickel-plated brass

Temperature Limits

- –73 to 104 °C (–100 to 220 °F)

Weight

- 0.5 lb

CONNECTION HEAD

The Extended Cover Connection Head (P/N 00079-0324-xxxx) provides the additional space required by sensors that have bayonet connectors. This model can also be used with general-purpose and spring-loaded sensors. The terminal block has six terminals for either single- or dual-element sensors.

The Flat Cover Connection Head (P/N 00079-0325-xxxx) is for general-purpose and spring-loaded sensors. The terminal block has six terminals for either single- or dual-element sensors.

Specifications

Sensor Connection

- 1/2–14 ANPT mounting thread. Screw terminals for lead wire connections

Electrical Connection

- 3/4–14 ANPT conduit

Materials of Construction

- Housing: Low-copper aluminum alloy
- O-Ring Seal: Silicone rubber
- Terminals: Nickel-plated brass

Temperature Limits

Head Type	Unapproved	E5 option	E6 option	E1 option
Painted	–100 to 100 °C –148 to 212 °F	–50 to 85 °C –58 to 185 °F	–50 to 85 °C –58 to 185 °F	–40 to 65 °C –40 to 149 °F
Unpainted	–100 to 200 °C –148 to 392 °F	–50 to 85 °C –58 to 185 °F	–50 to 200 °C –58 to 392 °F	–40 to 65 °C –40 to 149 °F

Enclosure Ratings

- When installed properly, painted connection heads are suitable for indoor and outdoor NEMA 4X and CSA Enclosure Type 4X installations. When installed properly, unpainted connection heads are suitable for NEMA 4 and CSA Enclosure Type 4 installations. See Hazardous Area Approvals for complete installation information.

Weight

- 2 lb 8 oz (extended cover)
- 1 lb 9 oz (flat cover)

Connection Head Model Numbers

Model	Description
00644-4410-0011	Rosemount Connection Head, painted aluminum
007903252003	Six Terminals with Flat Cover, Unapproved, Unpainted
007903242003	Six Terminals with Extended Cover, Unapproved, Unpainted
007903250002	Six Terminals with Flat Cover, FM Approved, Unpainted
007903240002	Six Terminals with Extended Cover, FM Approved, Unpainted
007903250003	Six Terminals with Flat Cover, CSA Approved, Unpainted
007903240003	Six Terminals with Extended Cover, CSA Approved, Unpainted
007903252005	Six Terminals with Flat Cover, Unapproved, Painted
007903242005	Six Terminals with Extended Cover, Unapproved, Painted
007903250004	Six Terminals with Flat Cover, FM Approved, Painted
007903240004	Six Terminals with Extended Cover, FM Approved, Painted
007903250005	Six Terminals with Flat Cover, CSA Approved, Painted
007903240005	Six Terminals with Extended Cover, CSA Approved, Painted
00644-4198-0011	No Approval Options, White Polypropylene
00065-0305-0001	Round Terminal Block for Rosemount and Polypropylene heads
006444-4431-0001	External ground Screw Assembly for Rosemount Connection Head
00644-4435-0011	Polypropelyne Connection Head with Terminal Block 1/2 in. NPT entries
00079-0329-0001	Kit of 12 Silicone Rubber O-rings for Flat/Extended Heads

Connection Head Dimensional Drawing

Rosemount Connection Head

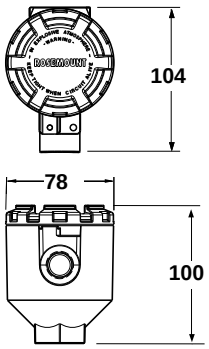

Polypropylene

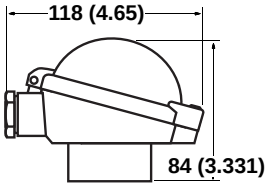

Flat Cover **Extended Cover** **Terminal View**

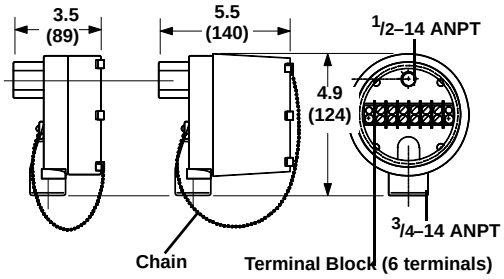

Dimensions are in inches (millimeters)

EXTENSION FITTING ASSEMBLIES

Extension fitting assemblies are available in

- a coupling and nipple assembly
- a union and nipple assembly

FIGURE 16. Extension Fitting

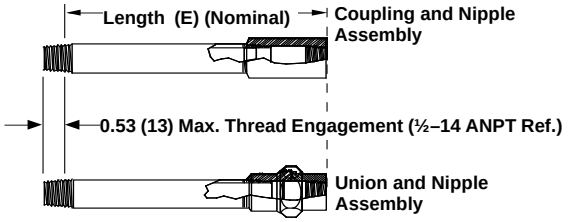

Dimensions are in inches (millimeters)

Table 26. Extension

Coupling and Nipple, SST		Union and Nipple, SST	
Model Number	**Length (E)**	**Model Number**	**Length (E)**
007903540250	2.5-in.	007903550250	2.5-in.
007903540300	3.0-in.(1)	007903550300	3.0-in.(1)
007903540350	3.5-in.	007903550350	3.5-in.
007903540400	4.0-in.	007903550400	4.0-in.
007903540450	4.5-in.	007903550450	4.5-in.
007903540500	5.0-in.	007903550500	5.0-in.
007903540550	5.5-in.	007903550550	5.5-in.
007903540600	6.0-in.(1)	007903550600	6.0-in.(1)
007903540650	6.5-in.	007903550650	6.5-in.
007903540700	7.0-in.	007903550700	7.0-in.
007903540750	7.5-in.	007903550750	7.5-in.
007903540800	8.0-in.	007903550800	8.0-in.
007903540850	8.5-in.	007903550850	8.5-in.
007903540900	9.0-in.	007903550900	9.0-in.

(1) Standard configuration with best delivery. Also available for emergency requirements. Consult factory for information.

Choosing an Extension

Aside from ambient temperature variations, the heat from the process is transferred from the thermowell to the transmitter housing. If the process temperature is near or beyond specification limits, consider the use of additional thermowell lagging, an extension nipple, or a remote mounting configuration to isolate the transmitter from the excessive temperatures. Use Figure 17 and the example below to determine an adequate thermowell extension length.

FIGURE 17. 3144 Transmitter Housing Temperature Rise versus Extension Length for a Test Installation

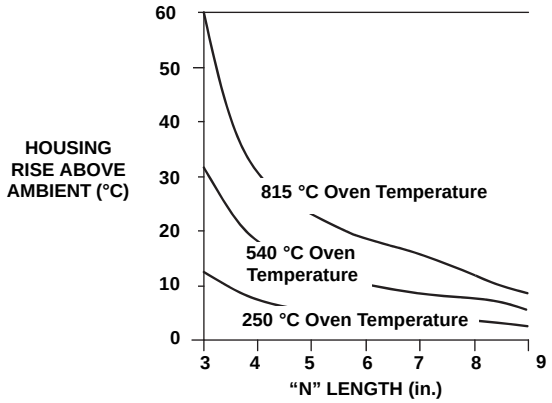

Example

The rated ambient temperature specification is 85 °C. If the maximum ambient temperature is 40 °C and the process temperature to be measured is 540 °C, the maximum allowable housing temperature rise is the rated temperature specification limit minus the existing ambient temperature (85 – 40), or 45 °C.

As shown in Figure 17, an extension (E) dimension of 3.0-in (76 mm) will result in a housing temperature rise of 30 °C. An "E" dimension of 3-in. would therefore be the minimum recommended length, and would provide a safety factor of about 15 °C. A longer "E" dimension, such as 6-in. (152 mm), would be desirable in order to reduce errors caused by transmitter temperature effect, although in that case the transmitter would probably require extra support. If a thermowell with lagging is used, the "E" dimension may be reduced by the length of the lagging.

MOUNTING ADAPTERS FOR SERIES 58, 68, 78, AND 183

M5–M7, Sensor Compression Fittings, 316 SST

- For adjustable sensor length.
- For low pressure applications (100 psig maximum).
- Fits ¼-inch diameter sensors.
- Available with 1/8–27 (M5), ¼–18 (M6), and ½–14 (M7) ANPT process threads.
- Not available on spring-loaded sensors.

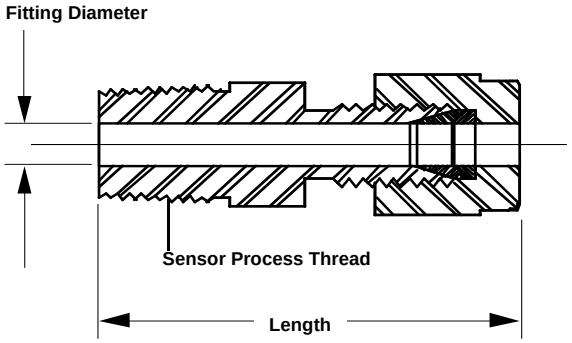

Table 27. Compression Fittings, 316 SST

(for attachment to the stem of the capsule)

Model Number	Option Code	Sensor Process Thread	Fitting Diameter		Length	
			in.	mm	in.	mm
C07961-0005	M5	1/8–27 ANPT	0.25	6.35	1.31	33.27
C07961-0006	M6	1/4–18 ANPT	0.25	6.35	1.5	38.1
C07961-0008	M7	1/2–14 ANPT	0.25	6.35	1.75	44.45

LEAD WIRE EXTENSIONS, CONNECTORS, AND SEALS

The following options are available on most Series 68 and 78 sensors. They are not available for use on Series 58C, 68Q, and 183 sensors or with IECEx or ATEX/ISSeP Flameproof approval (Option Codes E7 or E1).

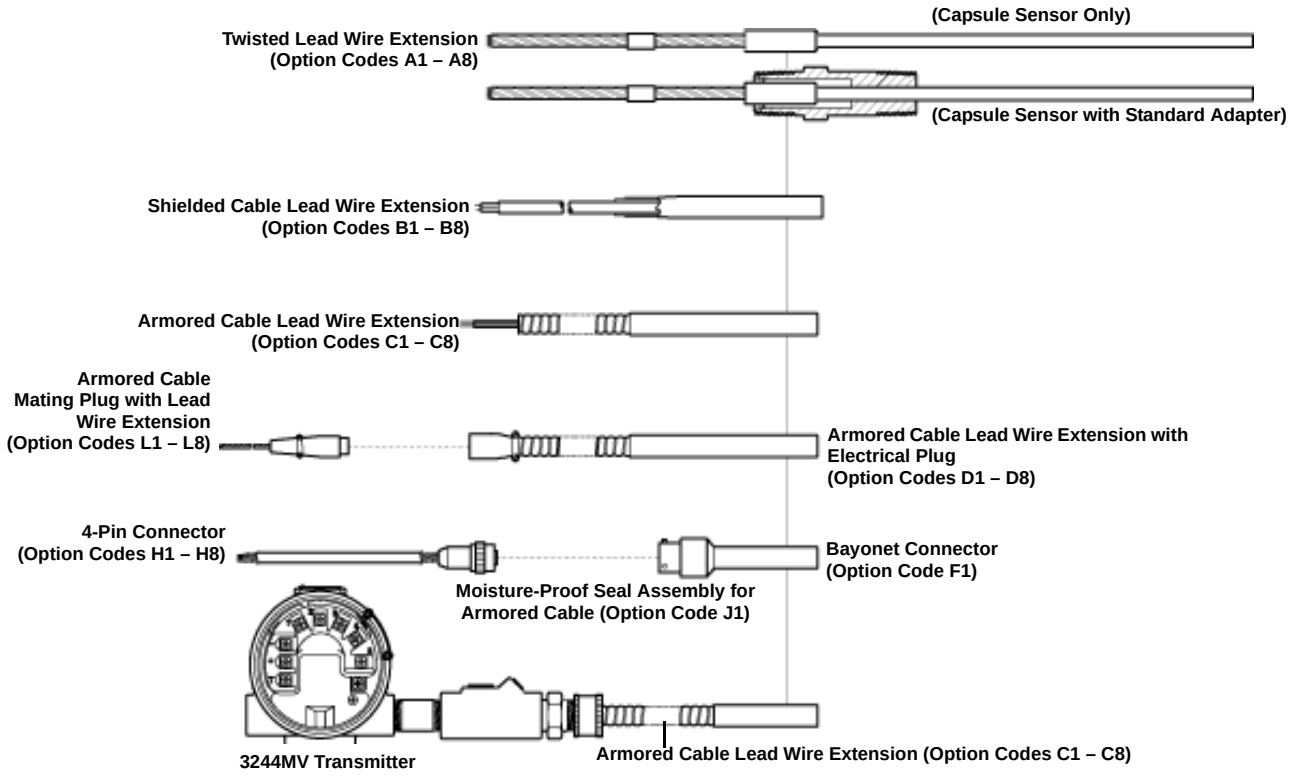

A1–A8, Twisted Lead Wire Extension

- Lead wire connections are silver brazed and individually insulated by shrinkable PTFE tubes
- Withstands 95 percent relative humidity
- 200 °C (392 °F) maximum temperature
- Available with single or dual-element sensors

Option Code	Y Length (ft)
A1	1 1/2
A2	3
A3	6
A4	12

Option Code	Y Length (ft)
A5	24
A6	50
A7	75
A8	100

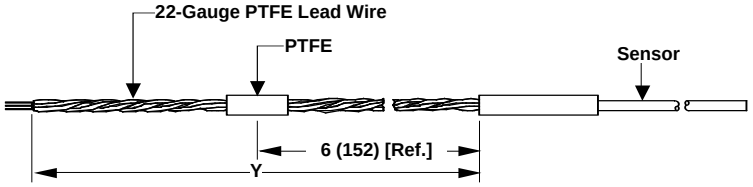

Not available for use with Series 68Q Sanitary RTDs and 183 thermocouples or with IECEx or ATEX/ISSeP flameproof approval (option codes E7 or E1).

Dimensions are in inches (millimeters)

B1–B8, Shielded Cable Lead Wire Extension

- Copper shielded cable prevents electrical noise distortions to sensor signal output
- Withstands 95 percent relative humidity
- 200 °C (392 °F) maximum temperature

Option Code	Y Length (ft)
B1	1 1/2
B2	3
B3	6
B4	12

Option Code	Y Length (ft)
B5	24
B6	50
B7	75
B8	100

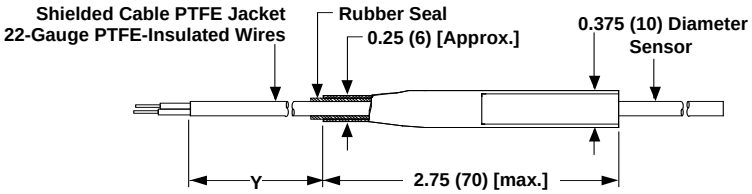

Not available for 58C, 68Q, and 183 sensors or with IECEx or ATEX/ISSeP flameproof approval (option codes E7 or E1)

Dimensions are in inches (millimeters)

C1–C8, Armored Cable Lead Wire Extension

- Provides lead wire protection in heavy duty environments.
- Withstands 95 percent relative humidity
- 200 °C (392 °F) maximum temperature
- Available with single or dual-element sensors

Option Code	Y Length (ft)
C1	1 1/2
C2	3
C3	6
C4	12

Option Code	Y Length (ft)
C5	24
C6	50
C7	75
C8	100

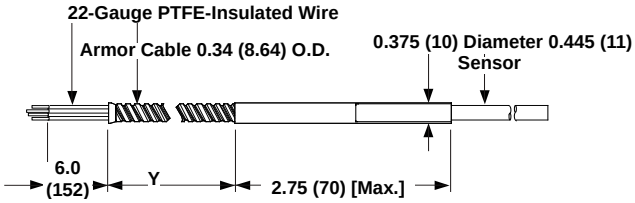

Not available for 58C, 68Q, and 183 sensors or with IECEx or ATEX/ISSeP flameproof approval (option codes E7 or E1)

Dimensions are in inches (millimeters)

D1–D8, ARMORED CABLE LEAD WIRE EXTENSION WITH ELECTRICAL PLUG

- Provides lead wire protection in heavy-duty environments
- Provides quick-disconnect capability
- Withstands 95 percent relative humidity

Option Code	Y Length (ft)
D1	1 1/2
D2	3
D3	6
D4	12

Option Code	Y Length (ft)
D5	24
D6	50
D7	75
D8	100

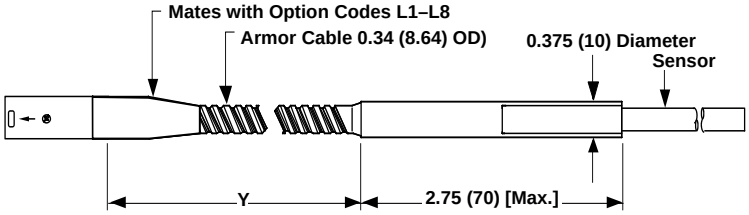

Not available for 58C, 68Q, and 183 sensors or with IECEx or ATEX/ISSeP flameproof approval (option codes E7 or E1)

Dimensions are in inches (millimeters)

L1–L8, ARMORED CABLE MATING PLUG WITH LEAD WIRE EXTENSION

- Completes quick-disconnect capability for armored cable
- Withstands 95 percent relative humidity
- Twisted lead wire extension for lowest cost installation

Option Code	Y Length (ft)
L1	1 1/2
L2	3
L3	6
L4	12

Option Code	Y Length (ft)
L5	24
L6	50
L7	75
L8	100

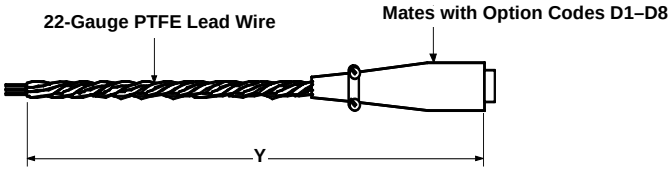

Not available for 58C, 68Q, and 183 sensors or with IECEx or ATEX/ISSeP flameproof approval (option codes E7 or E1)

Dimensions are in inches (millimeters)

F1, 4-PIN BAYONET CONNECTOR

- Provides quick-disconnect capability
- Withstands 100 percent relative humidity with connector mate
- Available for capsule and general purpose with 4-wire lead wire configuration only

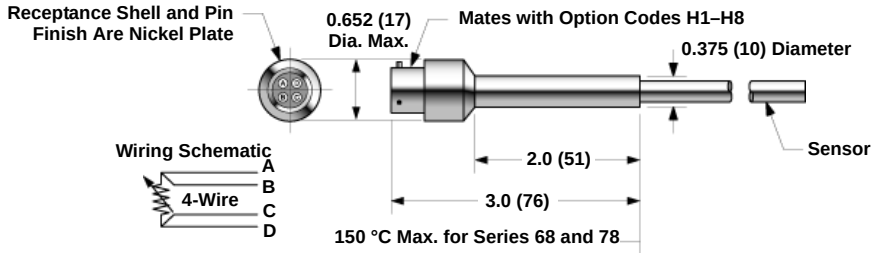

Not available for 58C, 68Q, and 183 sensors, or with FM or CSA explosion-proof, or with IECEx or ATEX/ISSeP flameproof approval (option codes E5, E6, E7, or E1)

Dimensions are in inches (millimeters)

H1–H8, 4-PIN CONNECTOR MATING PLUG WITH LEAD WIRE EXTENSION

- Completes the quick-disconnect capability of connector
- Provides twisted lead wire extension for remote installations
- Withstands 100 percent relative humidity with connector mate
- F1 connector is required if H1–H8 lead wire extension is used

Option Code	Y Length (ft)
H1	1 1/2
H2	3
H3	6
H4	12

Option Code	Y Length (ft)
H5	24
H6	50
H7	75
H8	100

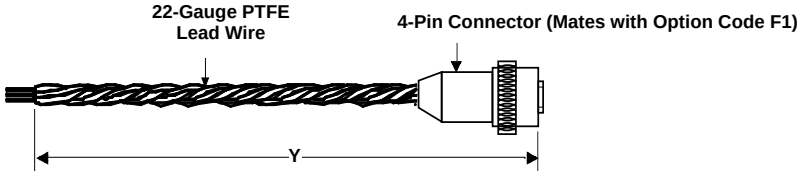

Not available for 58C, 68Q, and 183 sensors, or with FM or CSA explosion-proof, or with IECEx or ATEX/ISSeP flameproof approval (option codes E5, E6, E7, or E1)

Dimensions are in inches (millimeters)

J1, MOISTURE-PROOF SEAL ASSEMBLY FOR ARMORED CABLE

- Prevents moisture migration through armored cable
- For use in humid environments but not for direct liquid immersion
- Non-disconnectable type assembly with armored cable and sensor

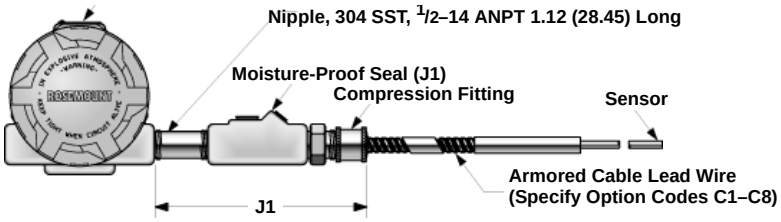

Not available for 58C, 68Q, and 183 sensors, or with FM or CSA explosion-proof, or with IECEx or ATEX/ISSeP flameproof approval (option codes E5, E6, E7, or E1).
Moisture-proof seal assembly must be ordered with armored cable lead wire extension (option codes C1 – C8)

Dimensions are in inches (millimeters)

THERMOWELLS

To simplify ordering, the previous Series 79, 80, and 81 thermowell offerings are all included in the new Series 91 thermowell option.

Materials

Rosemount Thermowells are supplied in most materials required for industrial applications. Standard materials are 316 SST, 304 SST, and C1018 carbon steel. For corrosive environments, special materials such as alloy and Inconel 600 are available. Consult factory for other material availability.

Strength (Pressure and Flow Vibration)

The strength of a thermowell depends on several parameters that relate thermowell construction to the installation environment. For most industrial applications, standard Rosemount thermowells provide the necessary strength if the material, style, and length are correct for the application. The proper selection of a thermowell depends on fluid type, temperature, pressure, and fluid velocity. It is important to note that most thermowell failures are caused by vibration that is induced by fluid flow. If static pressure strength is a major consideration, refer to Table 28 for standard material ratings for a 1/2-inch tip. Tapered thermowells are offered for additional strength.

Strength Calculation

Emerson Process Management has the ability to perform thermowell frequency calculations to verify that the thermowell dimensions you provide are appropriate for your specific application. To take advantage of this calculation, fill out and return the Configuration Data Sheet.

Construction

All thermowell bodies with an overall length less than 42-in. are machined from solid bar stock to ensure water-tightness. Flange mounts are welded to the thermowell body. Standard construction provides immersion lengths (U) from 2½ to 48 inches with overall lengths (L) from 4 to 59 inches respectively. Thermowells with overall lengths larger than 42-in. will be a 3-piece welded construction. Consult the factory for more information on welded 3-piece construction thermowells.

Identification Data

The part number is etched on each thermowell. Additional tagging for specific customer requirements is available.

Installation

For dimensional drawings of Thread Mounted, Weld Mounted, and Flange Mounted Thermowells, refer to Figure 18, 20, and 22.

Table 28. Thermowell Material Rating

		Process Rating(1) (psi) at Temperature (°F)						
Material	**Recommended Usage**	**0 °F**	**300 °F**	**500 °F**	**700 °F**	**900 °F**	**1100 °F**	**1300 °F**
304 SST	Good resistance to oxidation	5600	4800	4700	4600	3400	2400	780
316 SST	Good resistance to corrosion. Better resistance to chemical attack than 304 SST	5600	5400	5300	5200	4400	3200	1250
Carbon Steel	For non-corrosive service	3700	3700	3700	3650	2000	—	—

(1) In case of an explosion, the integrity of the thermowell is maintained to the specified pressures.

Figure 18. Thread Mounted Thermowells

Straight

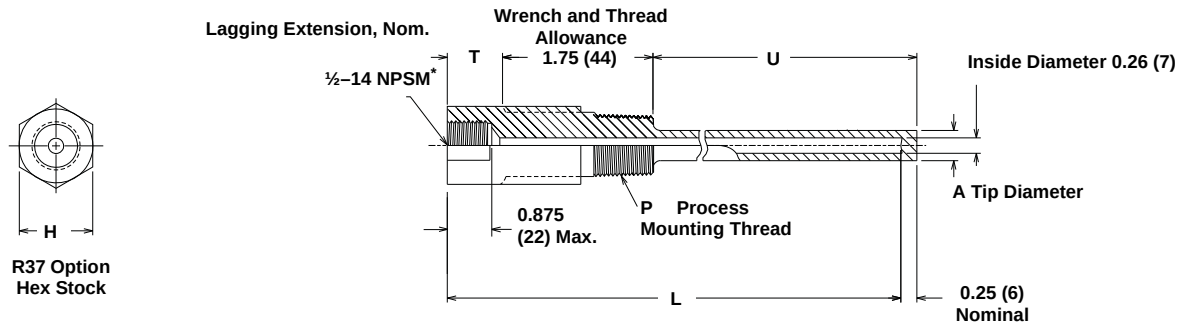

Thread (P)	Hex Size Inches (H)
0.5 – 0.75 ANPT	1.125
1–11.5 ANPT	1.375

Tapered

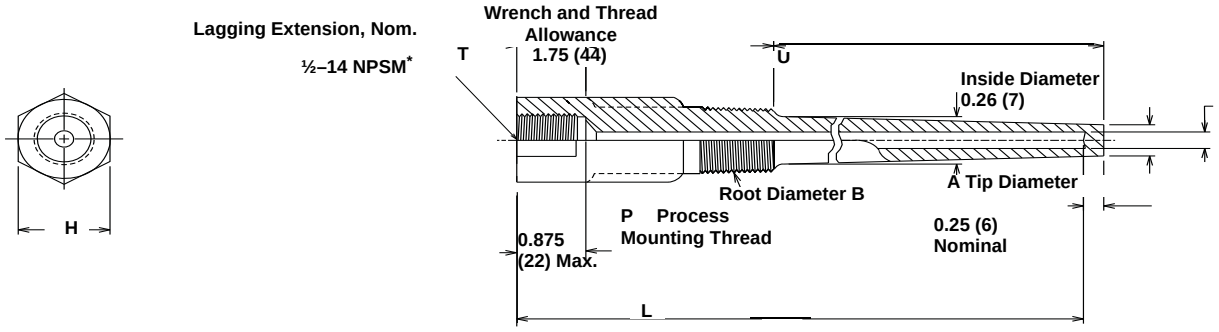

Thread (P)	Hex Size Inches (H)
0.5 – 0.75 ANPT	1.125
1–11.5 ANPT	1.375

** 1/2–14 ANPT threads are available*

Dimensions are in inches (millimeters)

Figure 19. Thread Mounted Thermowells (continued)

Stepped

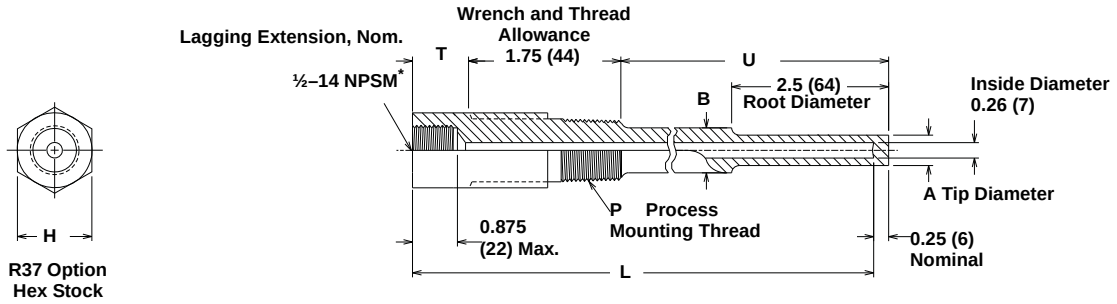

Stepped, For Thermowells with Overall Length Greater than 42-in. (3-Piece Construction)

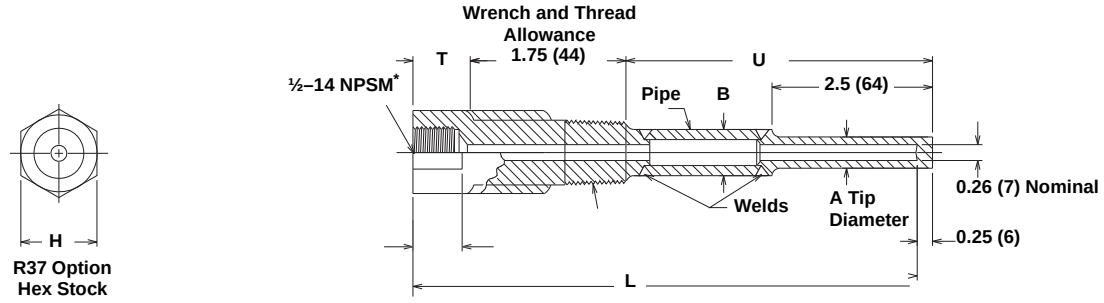

Thread (P)	Hex Size Inches (H)
0.5 – 0.75 ANPT	1.125
1–11.5 ANPT	1.375

** 1/2–14 ANPT threads are available*

Dimensions are in inches (millimeters)

Figure 20. Weld Mounted Thermowells

Straight

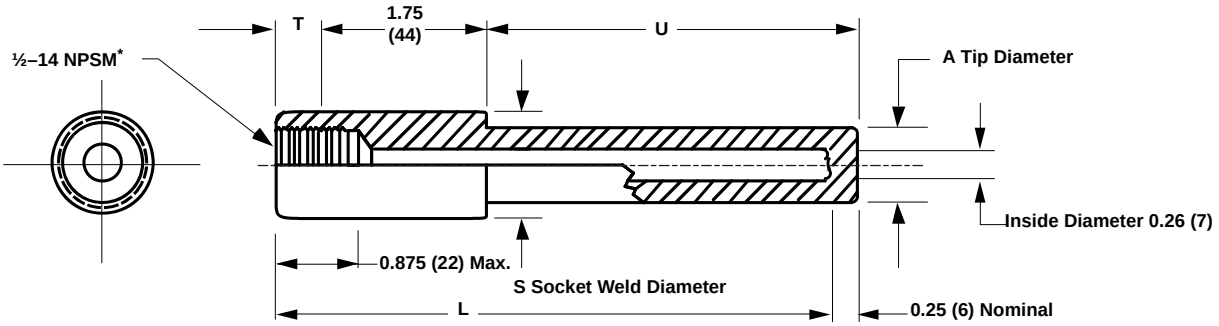

Pipe Size	Socket Size (S) Diameter
0.75-in.	1.050 ±0.010
1-in.	1.315 ±0.010

Tapered

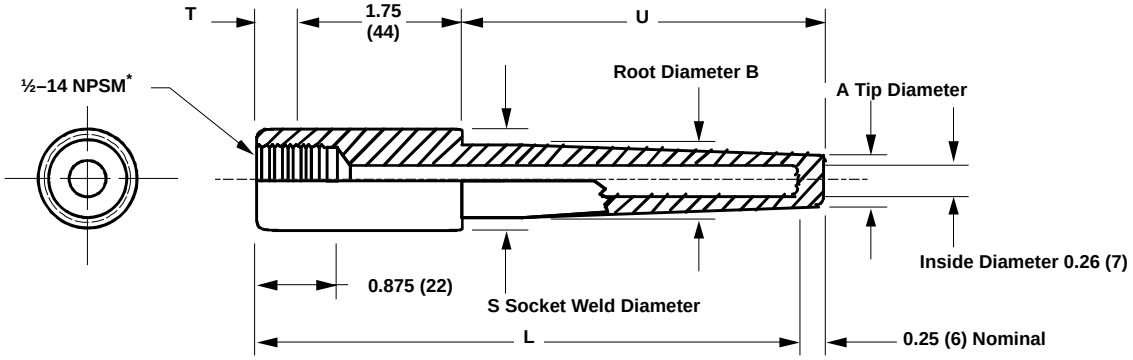

Pipe Size	Socket Size (S) Diameter
0.75-in.	1.050 ±0.010
1-in.	1.315 ±0.010

** 1/2–14 ANPT threads are available*

Dimensions are in inches (millimeters)

Figure 21. Weld Mounted Thermowells (continued)

Stepped

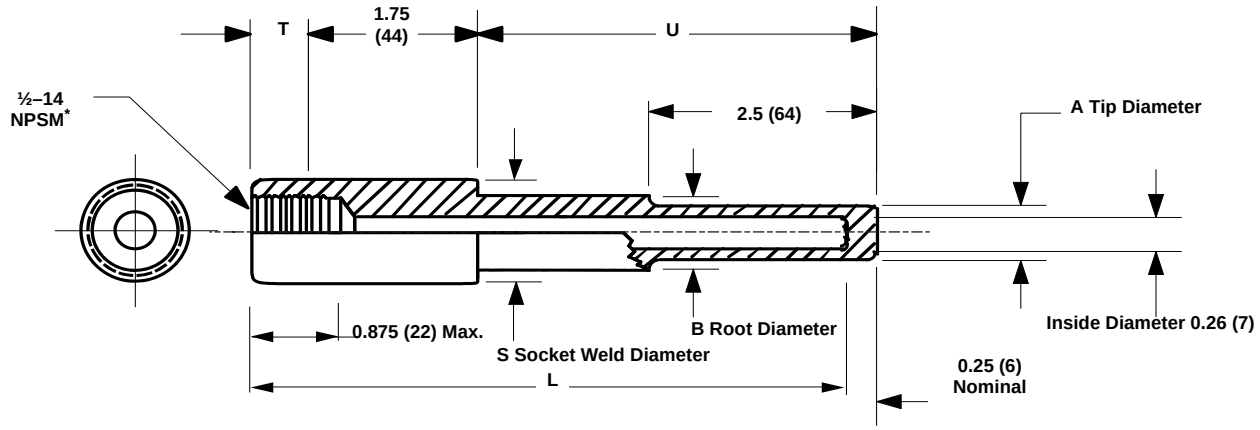

Stepped, For Thermowells with Overall Length Greater than 42-in. (3-Piece Construction)

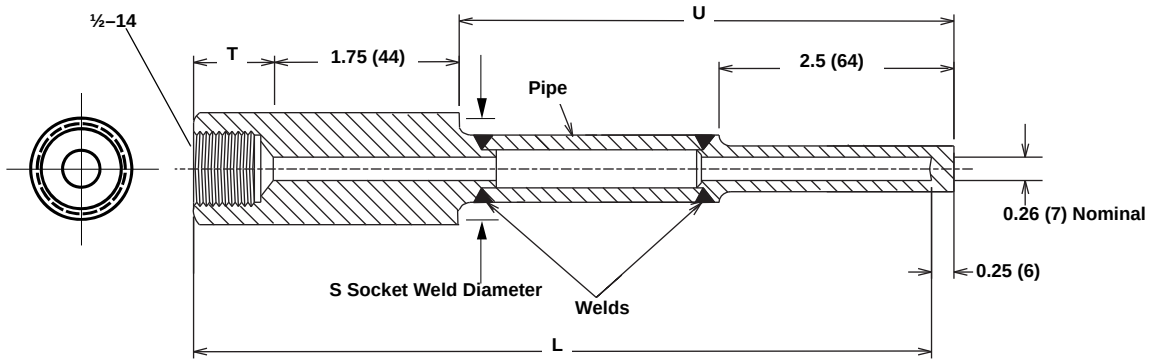

Pipe Size	Socket Size (S) Diameter
0.75-in.	1.050 ±0.010
1-in.	1.315 ±0.010

** 1/2–14 ANPT threads are available*

Dimensions are in inches (millimeters)

Figure 22. Flange Mounted Thermowells

Straight

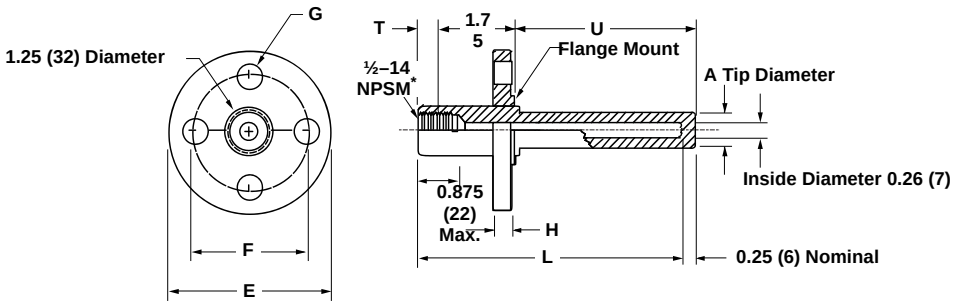

Tapered

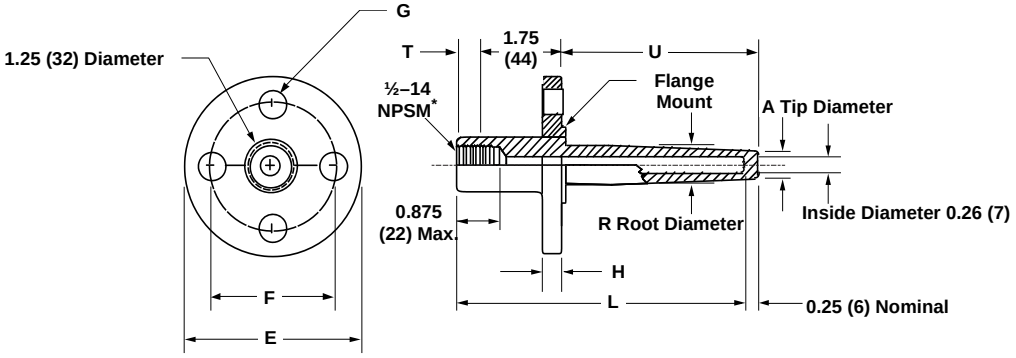

Class 150				
Size (in.)	O.D. (E)	Circle (F)	# of holes and dia. (G)	thickness (in.) (H)
1.0	4.25	3.12	four-0.625	0.5625
1.5	5.0	3.88	four-0.625	0.6875
2.0	6.0	4.75	four-0.75	0.75
3.0	7.5	6.00	four-0.75	0.94
Class 300				
1.0	4.88	3.5	four-0.75	0.69
1.5	6.12	4.5	four-0.88	0.81
2.0	6.5	5.0	eight-0.75	0.88

Class 600				
Size (in.)	O.D. (E)	Circle (F)	# of holes and dia. (G)	thickness (in.) (H)
1.0	4.88	3.5	four-0.75	0.94
1.5	6.12	4.5	four-0.88	1.13
2.0	6.5	5.0	eight-0.75	1.25
Class 900 and 1500				
1.5	7.0	4.88	four-1.12	1.5
Class 2500				
1.5	8.0	5.75	four-1.25	2.0

** 1/2–14 ANPT threads are available*

Dimensions are in inches (millimeters)

Figure 23. Flange Mounted Thermowells (continued)

Stepped

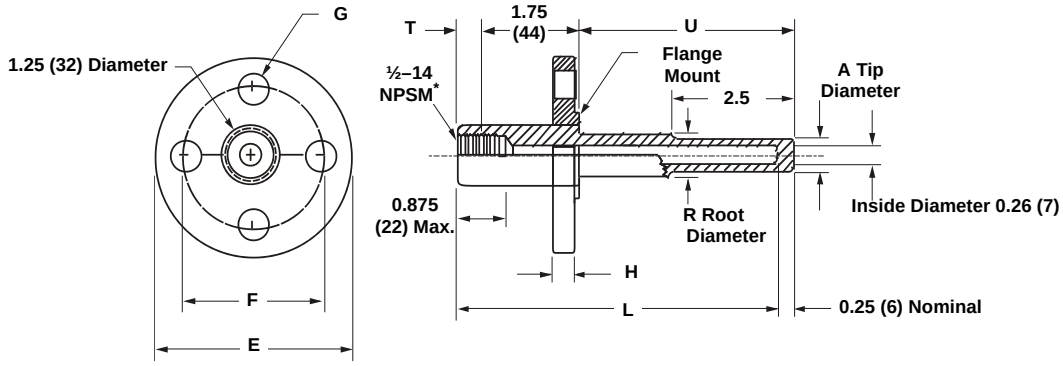

Stepped, For Thermowells with Overall Length Greater than 42-in. (3-Piece Construction)

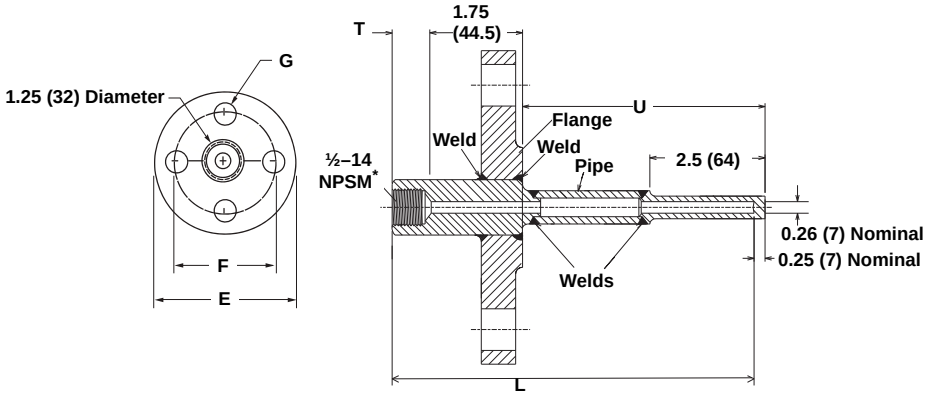

Class 150				
Size (in.)	O.D. (E)	Circle (F)	# of holes and dia. (G)	thickness (in.) (H)
1.0	4.25	3.12	four-0.625	0.5625
1.5	5.0	3.88	four-0.625	0.6875
2.0	6.0	4.75	four-0.75	0.75
3.0	7.5	6.00	four-0.75	0.94
Class 300				
1.0	4.88	3.5	four-0.75	0.69
1.5	6.12	4.5	four-0.88	0.81
2.0	6.5	5.0	eight-0.75	0.88

Class 600				
Size (in.)	O.D. (E)	Circle (F)	# of holes and dia. (G)	thickness (in.) (H)
1.0	4.88	3.5	four-0.75	0.94
1.5	6.12	4.5	four-0.88	1.13
2.0	6.5	5.0	eight-0.75	1.25
Class 900 and 1500				
1.5	7.0	4.88	four-1.12	1.5
Class 2500				
1.5	8.0	5.75	four-1.25	2.0

** 1/2–14 ANPT threads are available*

Dimensions are in inches (millimeters)

Hazardous Area Approvals

SENSORS

Factory Mutual (FM) Approval

E5 Explosion Proof for Class I, Division 1, Groups B, C, and D. Dust-Ignition Proof for Class II/III, Division 1, Groups E, F, and G. Suitable for indoor and outdoor (NEMA 4X) hazardous locations. Install in accordance with Rosemount drawing 00068-0013.

Canadian Standards Association (CSA) Approval

E6 Explosion Proof for Class I, Division 1, Groups B, C, and D. Dust-Ignition Proof for Class II/III, Division 1, Groups E, F, and G. Suitable for Class I, Division 2, Groups A, B, C, and D. Suitable for indoor and outdoor (CSA Enclosure Type 4X) hazardous locations. Install in accordance with Rosemount drawing 00068-0033.

To ensure approval compliance install sensors in exact accordance with the specified installation drawings (see Figure 25).

CONNECTION HEADS

Factory Mutual (FM) Approval

E5 Explosion Proof for Class I, Division 1, Groups B, C, and D. Dust-Ignition Proof for Class II/III, Division 1, Groups E, F, and G. Painted models are suitable for indoor and outdoor (NEMA 4X) hazardous locations. Unpainted models are suitable for indoor and outdoor (NEMA 4) hazardous locations. When used with temperature sensors, connection heads must be installed in accordance with Rosemount drawing 00068-0013.

Canadian Standards Association (CSA) Approval

E6 Explosion Proof for Class I, Division 1, Groups C, and D. Dust-Ignition Proof for Class II/III, Division 1, Groups E, F, and G. Suitable for Class I, Division 2, Groups A, B, C, and D.
Painted models are suitable for indoor and outdoor (CSA Enclosure Type 4X) hazardous locations. Unpainted models are suitable for indoor and outdoor (CSA Enclosure Type 4) hazardous locations. When used with temperature sensors, connection heads must be installed in accordance with Rosemount drawing 00068-0033.

To ensure approval compliance, install connection heads in exact accordance with the specified installation drawings (see Figure 25).

SENSOR AND TRANSMITTER ASSEMBLIES

ATEX Approval

E1 ATEX Explosion- proof
Certificate Number: KEMA99ATEX8715X
ATEX Marking: ⟨Ex⟩ II 2 G
Ex d IIC T6 (– 40 °C ≤ T_{amb} ≤ +65 °C)

Rosemount Series 68 and 78 RTD and Series 183 thermocouple temperature sensors with spring-loaded or general purpose style sensors are approved only for direct mount to the Rosemount 3144P, 644, 248, and 148 or mounted to the Rosemount Connection Head.

To ensure approval compliance, specify the E1 option on both the sensor and the transmitter at the time of ordering.

Special conditions for safe use (X)

For information on the dimensions of the flameproof joints the manufacturer shall be contacted.

NOTE
Rosemount series 68 and 78 RTD and Series 183 Thermocouple Temperature Sensors can be supplied as a replacement part with the E1 option for installation in an existing temperature measurement assembly.

IECEx Flameproof Approval

E7 Ex d IIC T6 (T_{amb} = –20 to 60 °C)
Rosemount Series 68 and 78 RTD and Series 183 thermocouple temperature sensors with spring-loaded or general purpose style sensor adapters are approved for direct mount to the Rosemount 148, 248, 644, and 3144P Temperature Transmitters or mounted to the Rosemount Connection Head.

To ensure approval compliance, specify the E7 option on both the sensor and the transmitter at the time of ordering, and install in exact accordance with Rosemount drawing 03144-0225 (see Figure 28).

Sensors and Accessories (English)

Factory Mutual (FM) Explosion-Proof

Figure 24. Installation Drawing 00068-0013, Rev. AD

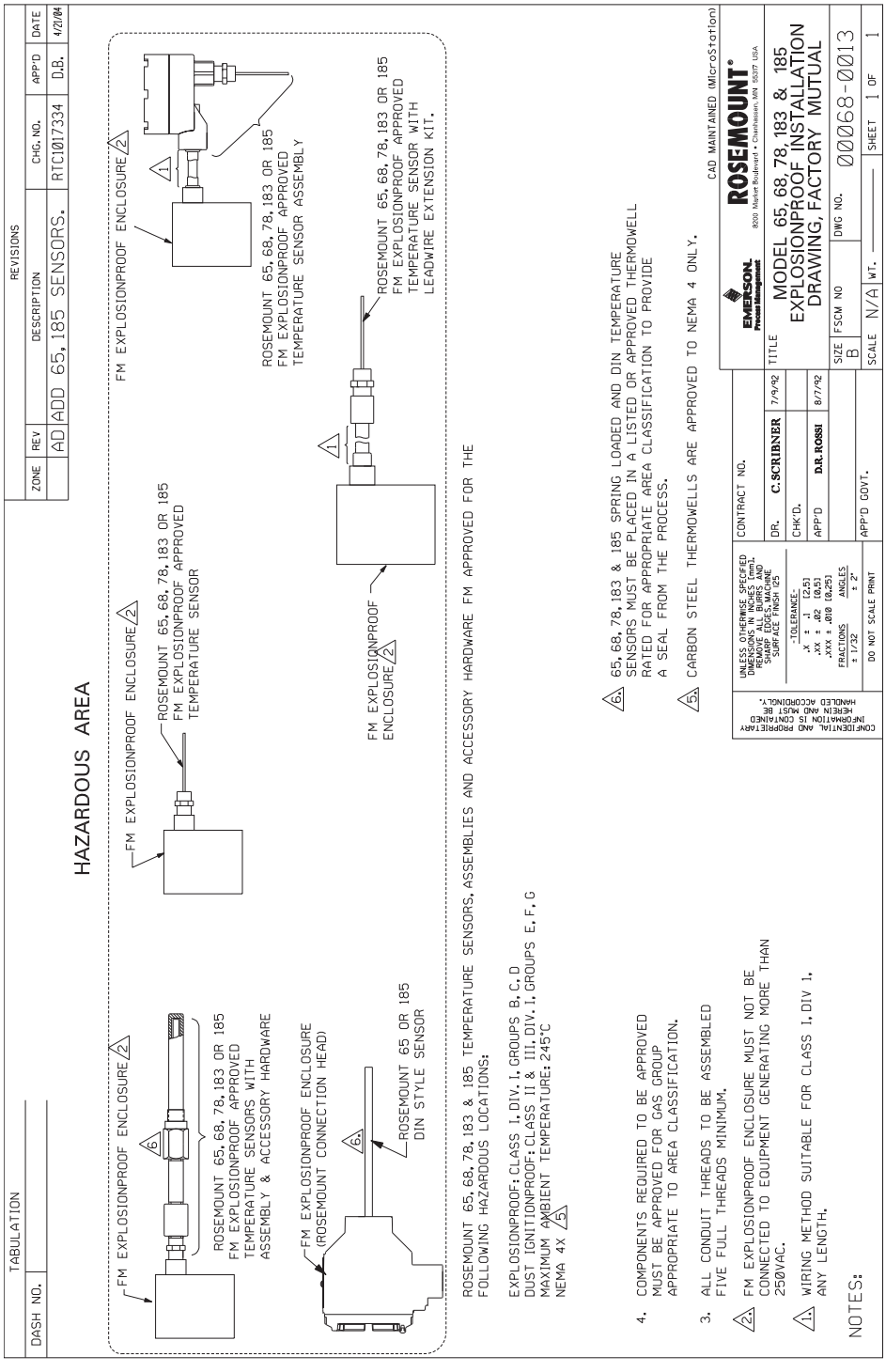

Canadian Standards Association (CSA) Explosion-Proof

Figure 25. Installation Drawing 00068-0033, Rev. AB Page 1 of 2

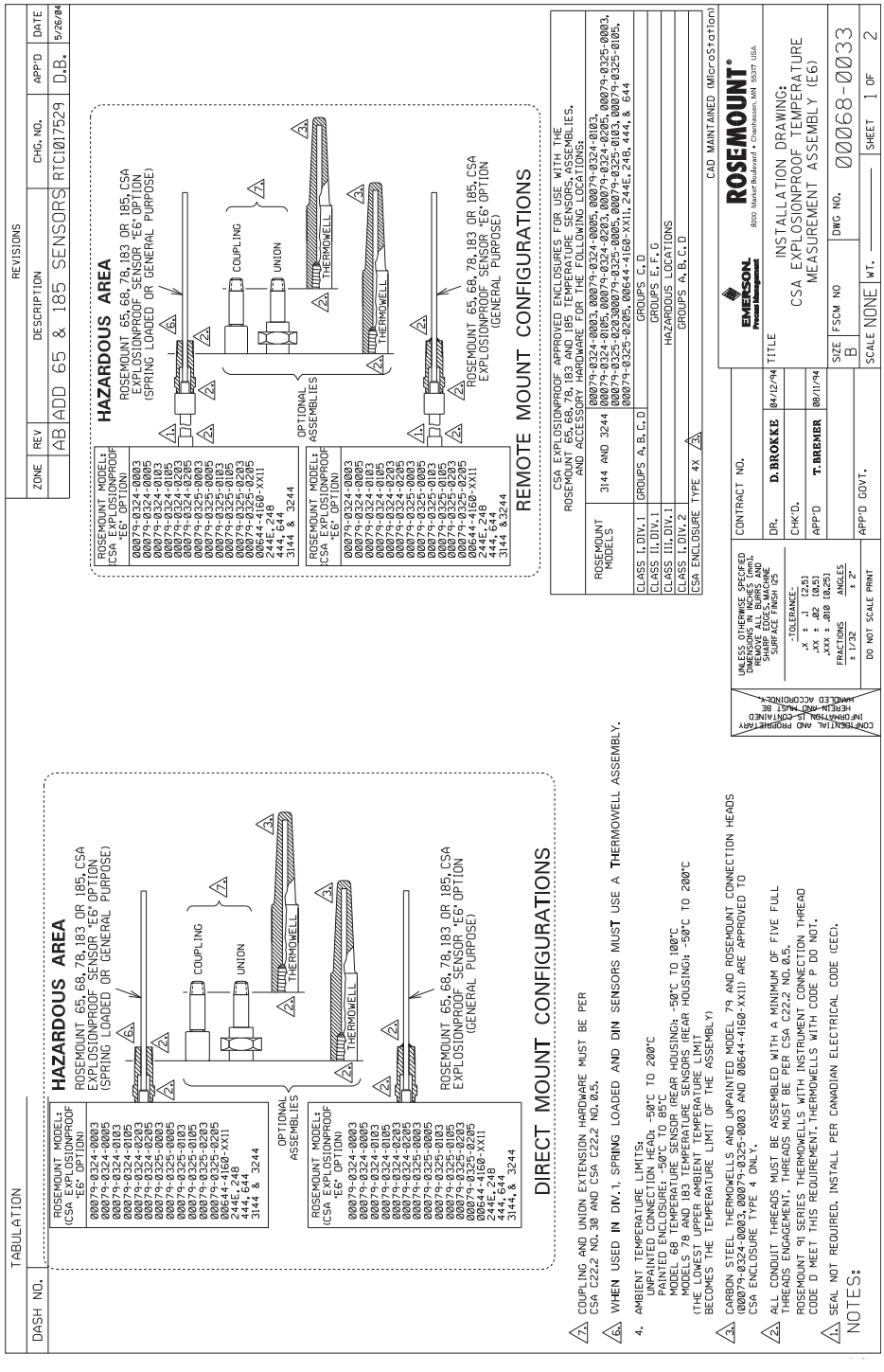

Figure 26. Installation Drawing 00068-0033, Rev. AB Page 2 of 2

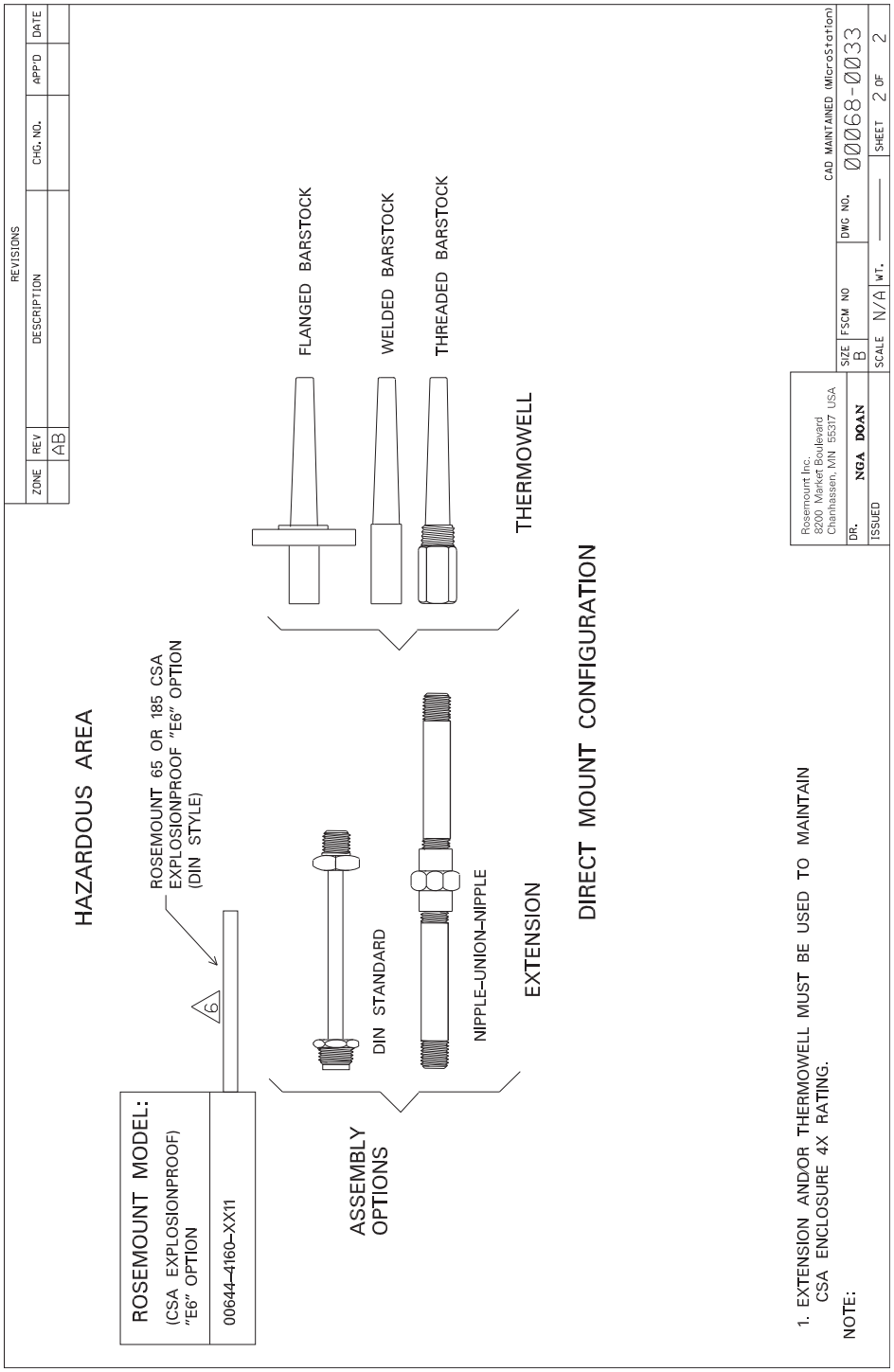

ATEX Flameproof

Figure 27. Installation Drawing 03144-0324, Rev. AB

CONFIDENTIAL AND PROPRIETARY INFORMATION IS CONTAINED HEREIN AND MUST BE HANDLED ACCORDINGLY

REVISIONS

REV	DESCRIPTION	CHG. NO.	APP'D	DATE
AA	NEW RELEASE	RTC1Ø11243	D.B.	7/17/Ø1
AB	CHANGE ISSEP REFERENCES TO KEMA	RTC1Ø11874	D.B.	11/26/Ø1

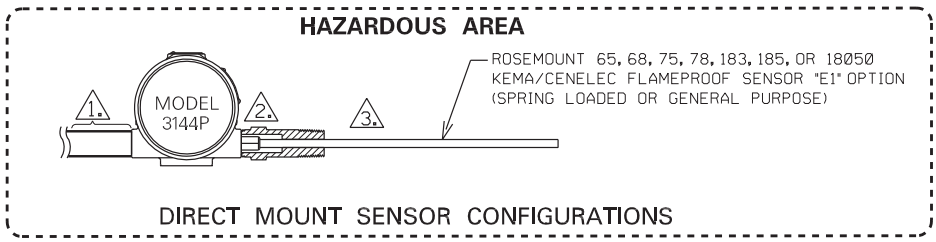

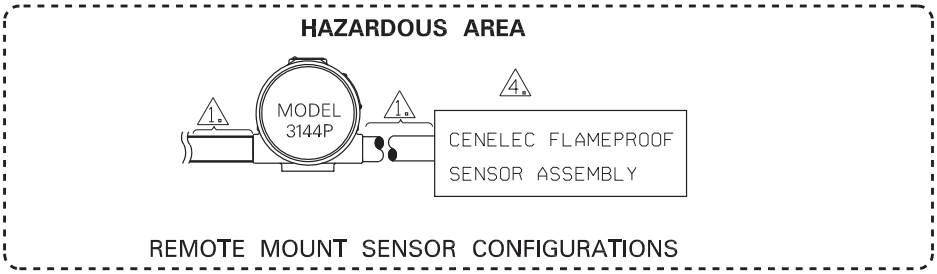

7. WAIT 1Ø SECONDS AFTER DISCONNECTING POWER BEFORE REMOVING COVER.
6. A CONDUIT PLUG MUST BE INSTALLED INTO ANY UNUSED CONDUIT ENTRIES.
5. ROSEMOUNT MODELS 3144P KEMA/CENELEC FLAMEPROOF APPROVAL Ex II 2 G
DESCRIPTION: EEx d IIC T6 (Tamb= -4Ø°C TO +7Ø°C) T5 (-4Ø°C TO +8Ø°C).
IP66

△4. TEMPERATURE SENSOR ASSEMBLY MUST BE CENELEC APPROVED FOR APPROPRIATE AREA CLASSIFICATION.

△3. SPRING LOADED SENSORS MUST USE A THERMOWELL ASSEMBLY.

△2. THREADS MUST BE ASSEMBLED WITH LOCTITE THREAD SEALANT AND HAVE A MINIMUM OF FIVE FULL THREADS ENGAGEMENT AND 8 mm AXIAL LENGTH ENGAGEMENT.

△1. INSTALL PER LOCAL INSTALLATION CODES.
CENELEC APPROVED CABLE ENTRY OR STOPPING BOX REQUIRED.

CAD MAINTAINED (MicroStation)

UNLESS OTHERWISE SPECIFIED DIMENSIONS IN INCHES [mm]. REMOVE ALL BURRS AND SHARP EDGES. MACHINE SURFACE FINISH 125

-TOLERANCE-
.X ± .1 [2,5]
.XX ± .Ø2 [Ø,5]
.XXX ± .Ø1Ø [Ø,25]
FRACTIONS ± 1/32
ANGLES ± 2°

DO NOT SCALE PRINT

CONTRACT NO.

DR. NGA DOAN 6/29/Ø1
CHK'D
APP'D. DIRK BAUSCHKE 7/17/Ø1

APP'D. GOVT.

EMERSON. Process Management
ROSEMOUNT®
8200 Market Boulevard • Chanhassen, MN 55317 USA

TITLE INSTALLATION DRAWING:
KEMA/CENELEC FLAMEPROOF TEMPERATURE MEASUREMENT ASSEMBLY (EI)

SIZE A | FSCM NO | DWG NO. Ø3144-Ø324

SCALE NONE | WT. | SHEET 1 OF 1

IECEx Flameproof

Figure 28. Drawing 03144-0325, Rev. AD

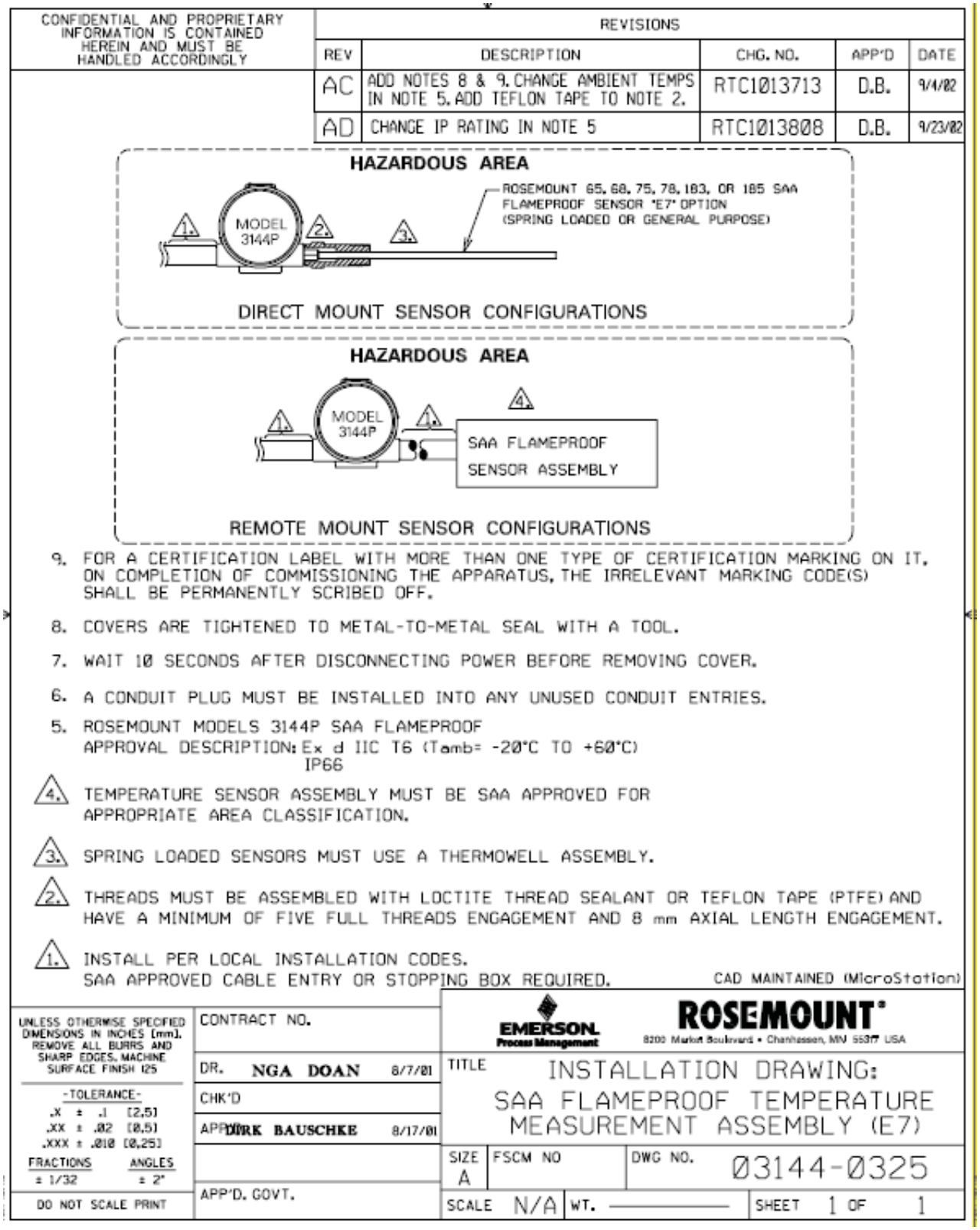

Sensors and Accessories (English)

Product Data Sheet
00813-0100-2654, Rev GE
January 2012

The Emerson logo is a trademark and service mark of Emerson Electric Co.
Rosemount and the Rosemount logotype are registered trademarks of Rosemount Inc.
All other marks are the property of their respective owners.

Standard Terms and Conditions of Sale can be found at www.rosemount.com\terms_of_sale

© 2012 Rosemount, Inc.

Emerson Process Management
Rosemount Inc.
8200 Market Boulevard
Chanhassen, MN 55317 USA
T (U.S.) 1-800-999-9307
T (International) (952) 906-8888
F (952) 906-8889

Emerson Process Management
Heath Place
Bognor Regis
West Sussex PO22 9SH
England
T 44 (1243) 863 121
F 44 (1243) 867 554

Emerson Process Management Asia Pacific Private Limited
1 Pandan Crescent
Singapore 128461
T (65) 6777 8211
F (65) 6777 0947
Enquiries@AP.EmersonProcess.com

www.rosemount.com

00813-0100-2654 Rev GE 1/12

EMERSON™
Process Management

Reference Manual
00809-0100-4021, Rev GC
April 2014

Rosemount® 3144P Temperature Transmitter



ROSEMOUNT

EMERSON.
Process Management

Rosemount® 3144P Temperature Transmitter

NOTICE

Read this manual before working with the product. For personal and system safety, and for optimum product performance, make sure you thoroughly understand the contents before installing, using, or maintaining this product.

Within the United States, Emerson Process Management has two toll-free assistance numbers:

Customer Central
Technical support, quoting, and order-related questions.
1-800-999-9307 (7:00 am to 7:00 pm CST)

North American Response Center
Equipment service needs.
1-800-654-7768 (24 hours)

International
(952)-906-8888

⚠ CAUTION

The products described in this document are NOT designed for nuclear-qualified applications. Using non-nuclear qualified products in applications that require nuclear-qualified hardware or products may cause inaccurate readings.

For information on Rosemount nuclear-qualified products, contact your local Emerson Process Management Sales Representative.

Table of Contents

Section 1: Introduction

1.1 Overview 1
1.1.1 Manual 1
1.1.2 Transmitter 2
1.2 Considerations 3
1.2.1 General 3
1.2.2 Electrical 3
1.2.3 Environmental 3
1.2.4 Moist or corrosive environments 4
1.2.5 Installation 5
1.2.6 Software compatibility 5
1.3 Return of materials 5
1.4 3144P revisions 6
1.5 Confirm HART revision capability 8

Section 2: Installation

2.1 Safety messages 9
2.2 Commissioning 10
2.2.1 Setting the loop to manual 10
2.2.2 Set the switches 11
2.3 Mounting 13
2.4 Installation 15
2.4.1 Typical North American installation 15
2.4.2 Typical European installation 16
2.4.3 In conjunction with a Rosemount 333 HART Tri-Loop™ (HART / 4–20 mA only) 17
2.4.4 LCD display 18
2.4.5 Multichannel installation (HART / 4–20 mA only) 20
2.5 Wiring 20
2.5.1 HART / 4–20 mA 20
2.5.2 Foundation fieldbus 23
2.5.3 Sensor connections 23
2.6 Power supply 24
2.6.1 Surges/transients 25
2.6.2 Grounding 25

Section 3: HART® commissioning

3.1 Overview 29
3.2 Confirm HART revision capability 29
3.3 Safety messages 30
3.4 Field communicator 30
3.4.1 Updating the HART communication software 30
3.4.2 Device dashboard menu tree 32
3.4.3 Device dashboard Fast Key sequences 38
3.5 Review configuration data 40
3.5.1 Review 40
3.6 Check output 40
3.6.1 Analog output 40
3.7 Configuration 40
3.7.1 Variable mapping 41
3.7.2 Sensor configuration 41
3.7.3 Change type and connections 41
3.7.4 Output units 42
3.7.5 Sensor 1 serial number 42
3.7.6 Sensor 2 serial number 42
3.7.7 2-wire RTD offset 42
3.7.8 Terminal (body) temperature 43
3.7.9 Dual-sensor configuration 43
3.8 Device output configuration 91
3.8.1 PV range values 91
3.8.2 Process variable damping 92
3.8.3 Alarm and saturation 93
3.8.4 HART output 94
3.8.5 LCD display options 94
3.9 Device information 94
3.9.1 Tag 94
3.9.2 Long tag 94
3.9.3 Date 95
3.9.4 Descriptor 95
3.9.5 Message 95
3.10 Measurement filtering 95
3.10.1 50/60 Hz filter 95
3.10.2 Master reset 96

3.10.3 Intermittent sensor detect 96
3.10.4 Intermittent threshold 96
3.10.5 Open sensor holdoff 97
3.11 Diagnostics and service 97
3.11.1 Loop test 98
3.12 Multidrop communication 98
3.13 Use with the HART Tri-Loop 99
3.14 Calibration 121
3.14.1 Calibration frequency 121
3.15 Trim the transmitter 122
3.15.1 Sensor input trim 123
3.15.2 Active calibrator and EMF compensation 124
3.15.3 Transmitter-sensor matching 125
3.15.4 D/A output trim or scaled output trim 132
3.15.5 Output trim 132
3.15.6 Scaled output trim 133
3.16 Troubleshooting 133
3.16.1 Overview 133
3.16.2 LCD display 137
3.16.3 Spare parts 138

Section 4: Foundation™ fieldbus configuration

4.1 Overview 139
4.2 Safety messages 139
4.3 General block information 140
4.3.1 Device description 140
4.3.2 Node address 140
4.3.3 Modes 140
4.3.4 Link Active Scheduler 141
4.3.5 Capabilities 142
4.4 Foundation fieldbus function blocks 142
4.5 Resource block 144
4.5.1 Features and Features_Sel 144
4.5.2 PlantWeb™ alerts 145
4.5.3 Recommended actions for PlantWeb alerts 148
4.5.4 Recommended actions for field diagnostics per NE107 149
4.5.5 Resource block diagnostics 149
4.6 Sensor transducer block 150
4.6.1 Sensor transducer block diagnostics 151

4.7 LCD display transducer block 152
4.7.1 Custom meter configuration 152
4.7.2 LCD display transducer block diagnostics 153
4.8 Hot Backup™ transducer 154
4.9 Analog Input (AI) 155
4.9.1 Simulation 155
4.9.2 Configure the AI block 156
4.9.3 Filtering 159
4.9.4 Process alarms 159
4.9.5 Status 160
4.9.6 Advanced features 160
4.9.7 Analog input diagnostics 161
4.10 Operation 162
4.10.1 Overview 162
4.10.2 Trim the transmitter 162
4.10.3 Advanced diagnostics 164
4.10.4 Statistical process monitoring (SPM) 166
4.10.5 SPM configuration 167
4.11 Troubleshooting guides 168
4.11.1 Foundation fieldbus 171
4.11.2 LCD display 172

Section 5: Maintenance

5.1 Safety messages 175
5.2 Maintenance 176
5.2.1 Test terminal (HART / 4–20 mA only) 176
5.2.2 Sensor checkout 176
5.2.3 Electronics housing 176
5.2.4 Transmitter diagnostics logging 177

Section 6: Certified safety instrumented system (safety-certified)

6.1 Safety instrumented systems (SIS) certification 179
6.2 Rosemount® 3144P safety certified identification 179
6.3 Installation 180
6.4 Commissioning 180
6.5 Configuration 180

6.6 Safety messages 180
6.7 Certification. 181
6.8 3144P safety-certified identification 181
6.9 Installation. 181
6.10 Commissioning 181
6.11 Configuration 181
6.12 Operation and maintenance 182
6.12.1 Proof test 182
6.12.2 Inspection 184
6.13 Specifications 184
6.13.1 Failure rate data 184
6.13.2 Product life. 184
6.14 Spare parts 184

Section 7: Prior use (PU) safety instrumented system

7.1 Overview 187
7.2 Safe failure fraction 188
7.3 Installation. 188
7.3.1 Switches 188
7.3.2 Changing switch position 188
7.3.3 Proof test 190

Appendix A: Reference data

A.1 HART® and Foundation™ fieldbus specifications 191
A.1.1 Functional specifications. 191
A.1.2 Physical specifications 191
A.1.3 Performance specifications. 192
A.2 HART / 4–20 mA specifications 198
A.3 Foundation fieldbus specifications 200
A.4 Dimensional drawings. 203
A.5 Ordering information 206
A.6 Spare parts list 211

Appendix B: Product Certifications

B.1 Approved Manufacturing Locations 217
B.2 European Directive Information 217
B.3 Ordinary Location Certification from FM Approvals 217

Section 1 Introduction

Overview . . . . . page 1
Considerations . . . . . page 3
Return of materials . . . . . page 5
3144P revisions . . . . . page 6
Confirm HART revision capability . . . . . page 8

1.1 Overview

1.1.1 Manual

This manual is designed to assist in the installation, operation, and maintenance of the Rosemount® 3144P.

Section 1: Introduction

- Transmitter and Manual overview
- Considerations
- Return of material

Section 2: Installation

- Mounting
- Installation
- Wiring
- Power supply

Section 3: HART® commissioning

- Field communicator
- Configuration
- Multidrop communication
- Calibration
- Trim the transmitter

Section 4: Foundation™ fieldbus configuration

- Calibration
- Hardware maintenance
- Diagnostic messaging
- Trim the transmitter

Section 5: Maintenance

- Maintenance
- Troubleshooting

Section 6: Certified safety instrumented system (safety-certified)

- Information regarding Safety Certified transmitters

Appendix A: Reference data

- Specifications
- Dimensional drawings
- Ordering information

Appendix B: Product Certifications

- Product certifications
- Installation drawings

1.1.2 Transmitter

Industry-leading temperature transmitter delivers unmatched field reliability and innovative process measurement solutions:

- Superior accuracy and stability
- Dual and single sensor capability with universal sensor inputs (RTD, T/C, mV, ohms)
- Comprehensive sensor and process diagnostics offering
- IEC 61508 safety certification
- Dual-compartment housing
- Large LCD display
- Selectable HART Revision (5 and 7) or FOUNDATION fieldbus protocols

Improve efficiency with best-in-class product specifications and capabilities:

- Reduce maintenance and improve performance with industry leading accuracy and stability
- Improve measurement accuracy by 75% with Transmitter-Sensor Matching
- Ensure process health with system alerts and easy to use Device Dashboards
- Easily check device status and values on local LCD display with large percent range graph
- Achieve high reliability and installation ease with the industry's most rugged dual compartment design

Optimize measurement reliability with diagnostics designed for any protocol on any host system.

- **Thermocouple Degradation Diagnostic** monitors the health of a thermocouple loop, enabling preventative maintenance
- **Minimum and Maximum Temperature Tracking** tracks and records temperature extremes of the process sensors and the ambient environment
- **Sensor Drift Alert** detects sensor drift and alerts the user
- the **Hot Backup™** feature provides temperature measurement redundancy

Refer to the following literature for a full range of compatible connection heads, sensors, and thermowells provided by Emerson® Process Management:

- Temperature Sensors and Assemblies Product Data Sheet, Volume 1 (document number 00813-0100-2654)
- Temperature Sensors and Assemblies Product Data Sheet, Metric (document number 00813-0200-2654)

1.2 Considerations

1.2.1 General

Electrical temperature sensors, such as resistance temperature detectors (RTDs) and thermocouples (T/Cs), produce low-level signals proportional to temperature. The 3144P transmitter converts low-level signals to HART or FOUNDATION fieldbus and then transmits the signals to the control system via two power/signal wires.

1.2.2 Electrical

Proper electrical installation is essential to prevent errors due to sensor lead resistance and electrical noise. For HART communications, the current loop must have between 250 and 1100 ohms resistance. Refer to Figure 2-11 on page 22 for sensor and current loop connections. FOUNDATION fieldbus devices must have proper termination and power conditioning for reliable operation. Shielded cables must be used for FOUNDATION fieldbus and may only be grounded in one place.

1.2.3 Environmental

Temperature effects

The transmitter will operate within specifications for ambient temperatures between –40 and 185 °F (–40 and 85 °C). Since heat from the process is transferred from the thermowell to the transmitter housing, if the expected process temperature is near or beyond specification limits, consider using additional thermowell lagging, an extension nipple, or a remote mounting configuration to isolate the transmitter from the process. Figure 1-1 details the relationship between housing temperature rise and extension length.

Figure 1-1. 3144P Transmitter Housing Temperature Rise versus Extension Length for a Test Installation

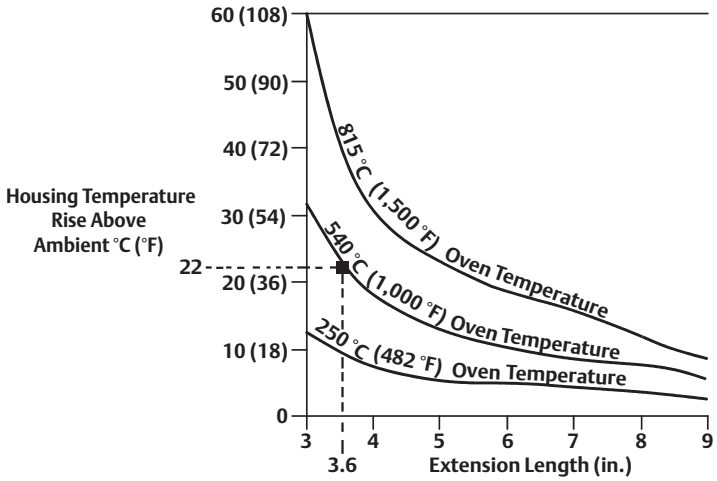

Example:

The maximum permissible housing temperature rise (T) can be calculated by subtracting the maximum ambient temperature (A) from the transmitter's ambient temperature specification limit (S). For instance, if A = 40 °C.

$$T = S - A$$

$$T = 85\ °C - 40\ °C$$

$$T = 45\ °C$$

For a process temperature of 540 °C (1004 °F), an extension length of 3.6 inches (91.4 mm) yields a housing temperature rise (R) of 22 °C (72 °F), providing a safety margin of 23 °C (73 °F). A 6.0 inch (152.4 mm) extension length [R = 10 °C (50 °F)] offers a higher safety margin [35 °C (95 °F)] and reduces temperature-effect errors but would probably require extra transmitter support. Gauge the requirements for individual applications along this scale. If a thermowell with lagging is used, the extension length may be reduced by the length of the lagging.

1.2.4 Moist or corrosive environments

The 3144P temperature transmitter has a highly reliable dual compartment housing designed to resist moisture and corrosion. The sealed electronics module is mounted in a compartment that is isolated from the terminal side with conduit entries. O-ring seals protect the interior when the covers are properly installed. In humid environments, however, it is possible for moisture to accumulate in conduit lines and drain into the housing.

Note
Each transmitter is marked with a tag indicating the approvals. Install the transmitter according to all applicable installation codes, and approval and installation drawings (see Appendix B: Product Certifications). Verify that the operating atmosphere of the transmitter is consistent with the hazardous locations certifications. Once a device labeled with multiple approval types is installed, it should not be reinstalled using any of the other labeled approval types. To ensure this, the approval label should be permanently marked to distinguish the approval type(s) used.

1.2.5 Installation

When choosing an installation location and position, take access to the transmitter into account.

Terminal side of electronics housing

Mount the transmitter so the terminal side is accessible, allowing adequate clearance for cover removal. Best practice is to mount the transmitter with the conduit entries in a vertical position to allow for moisture drainage.

Circuit side of electronics housing

Mount the transmitter so the circuit side is accessible, providing adequate clearance for cover removal. Additional room is required for LCD display installation. The transmitter may be mounted directly to or remotely from the sensor. Using optional mounting brackets, the transmitter may be mounted to a flat surface or a 2.0 inch (50.8 mm) diameter pipe (see “Mounting” on page 192).

1.2.6 Software compatibility

Replacement transmitters may contain revised software that is not fully compatible with the existing software. The latest device descriptors (DD) are available with new field communicators or they can be loaded into existing communicators at any Emerson Process Management Service Center or via the Easy Upgrade process. For more information on upgrading a field communicator, see Section 3.
To download new device drivers, visit www.AMSSuite.com.

1.3 Return of materials

To expedite the return process in North America, call the Emerson Process Management National Response Center (800-654-7768) for assistance with any needed information or materials.

⚠ The center will ask for the following information:

- Product model
- Serial numbers
- The last process material to which the product was exposed

The center will provide

- A Return Material Authorization (RMA) number
- Instructions and procedures to return goods that were exposed to hazardous substances

For other locations, contact an Emerson Process Management representative.

Note
If a hazardous substance is identified, a Material Safety Data Sheet (MSDS), required by law to be available to people exposed to specific hazardous substances, must be included with the returned materials.

1.4 3144P revisions

HART

The initial release of the 3144P HART was device revision 3. Each additional revision had incremental improvements. Table 1-1 summarizes these changes.

Table 1-1. HART 3144P Revisions

Software release date	Identify device		Field device driver		Review instructions
	NAMUR software revision	HART software revision(1)	HART universal revision(2)	Device revision	Manual document number
April-2012	1.1.1	2	7	6(3)	00809-0100-4021
			5	5(3)	
Feb-2007	N/A	1	5	4	00809-0100-4021
Dec 2003	N/A	N/A	5	3	00809-0100-4021

(1) NAMUR Software Revision is located in the hardware tag of the device. HART Software Revision can be read using a HART capable configuration tool.
(2) Device Driver file names use Device and DD Revision, e.g. 10_07. HART Protocol is designed to enable legacy driver revisions to continue to communicate with new HART devices. To access this functionality, the new device driver must be downloaded. It is recommended to download the new device driver to ensure new functionality.
(3) HART Revision 5 and 7 Selectable, Thermocouple Degradation Diagnostic, Min/Max Tracking.

FOUNDATION fieldbus

The following table summarizes the 3144P fieldbus revision history.

Table 1-2. FOUNDATION fieldbus 3144P Revisions

Device rev.	Software rev.	Hardware rev.	Description	Date
Rev 1	1.00.011	5	Initial release	Mar. 2004
Rev 1	1.00.024	5	Minor product maintenance, software	Sep. 2004
Rev 1	1.00.024	6	Minor product maintenance, hardware	Dec. 2004
Rev 1	1.01.004	6	Software update	Oct. 2005
Rev 1	1.01.010	7	Component obsolescence hardware change and software to support the hardware change.	Feb. 2007
Rev 2	2.02.003	7	FF Sensor and Process Diagnostic Release (D01): Thermocouple Degradation Diagnostic and Minimum and Maximum Temperature Tracking	Nov. 2008

Table 1-2. FOUNDATION fieldbus 3144P Revisions

Device rev.	Software rev.	Hardware rev.	Description	Date
Rev 3	3.10.23	7	Device Compliance to ITK 6.0.1. Addition of NE107 device diagnostic information. Ease of use improvements including: ■ Hot Backup functionality has been moved to the transducer block, allowing easier configuration from the DD ■ Device is shipped with the simulate switch ON, allowing device alerts simulation without cover removal ■ Device has unique block names using the last four digits (XXXX) of the output board serial number, e.g. AI_1400_XXXX ■ All blocks are instantiated before shipping, including model option code dependent blocks. The product also has all parameters initialized so that its primary measurement is available with no user changes required. ■ All devices ship will AI block scheduled. ■ Customer will be able to use old DD files when replacing a device with a newer rev device - This is possible for devices with device revision number 3 and above. ■ Wherever possible, the product ships with parameters initialized to common values. The product shall ship with no uninitialized parameters that will keep the transmitter from providing its primary measurement right out of the box. ■ The product's default block tags are be less than or equal to 16 characters in length. ■ Custom function blocks were replaced with enhanced function blocks. ■ Default block tags include underscores, “_”, instead of white spaces. ■ The CF file has a better description of the device, including meaningful defaults and example values. ■ Device provides means to properly range graphs and charts in the device dashboards.	June 2013

1.5 Confirm HART revision capability

If using HART based control or asset management systems, confirm the HART capability of those systems prior to transmitter installation. Not all systems are capable of communicating with HART Revision 7 protocol. This transmitter can be configured for either HART Revision 5 or Revision 7.

Switch HART revision mode

If the HART configuration tool is not capable of communicating with HART Revision 7, the 3144P will load a Generic Menu with limited capability. The following procedures will switch the HART revision mode from the Generic Menu.

1. Manual Setup>Device Information>Identification>Message
    a. To change to HART Revision 5, Enter: “HART5” in the Message field
    b. To change to HART Revision 7, Enter: “HART7” in the Message field

Section 2 Installation

Safety messages . . . . . page 9
Commissioning . . . . . page 10
Mounting . . . . . page 13
Installation . . . . . page 15
Wiring . . . . . page 20
Power supply . . . . . page 24

2.1 Safety messages

Instructions and procedures in this section may require special precautions to ensure the safety of the personnel performing the operations. Information that potentially raises safety issues is indicated by a warning symbol (⚠). Please refer to the following safety messages before performing an operation preceded by this symbol.

⚠ WARNING

Explosions could result in death or serious injury.

- Do not remove the transmitter cover in explosive atmospheres when the circuit is live.
- Before connecting a Field Communicator in an explosive atmosphere, make sure the instruments in the loop are installed in accordance with intrinsically safe or non-incendive field wiring practices.
- Verify that the operating atmosphere of the transmitter is consistent with the appropriate hazardous locations certifications.
- Both transmitter covers must be fully engaged to meet explosion-proof requirements.

Failure to follow these installation guidelines could result in death or serious injury.

- Make sure only qualified personnel perform the installation.

Process leaks could result in death or serious injury.

- Install and tighten thermowells or sensors before applying pressure, or process leakage may result.
- Do not remove the thermowell while in operation. Removing while in operation may cause process fluid leaks.

Electrical shock could cause death or serious injury. If the sensor is installed in a high-voltage environment and a fault or installation error occurs, high voltage may be present on the transmitter leads and terminals.

- Use extreme caution when making contact with the leads and terminals.

2.2 Commissioning

The 3144P must be configured for certain basic variables to operate. In many cases, these variables are pre-configured at the factory. Configuration may be required if the variables need to be changed.

Commissioning consists of testing the transmitter and verifying transmitter configuration data. Rosemount® 3144P transmitters can be commissioned either before or after installation. Commissioning the transmitter on the bench before installation using a field communicator or AMS™ Device Manager ensures that all transmitter components are in working order.

For more information on using the field communicator with the 3144P transmitter, see "HART® commissioning" on page 29. For more information on using the 3144 with FOUNDATION™ fieldbus, see Section 4: Foundation™ fieldbus configuration.

Figure 2-1. Installation Flowchart

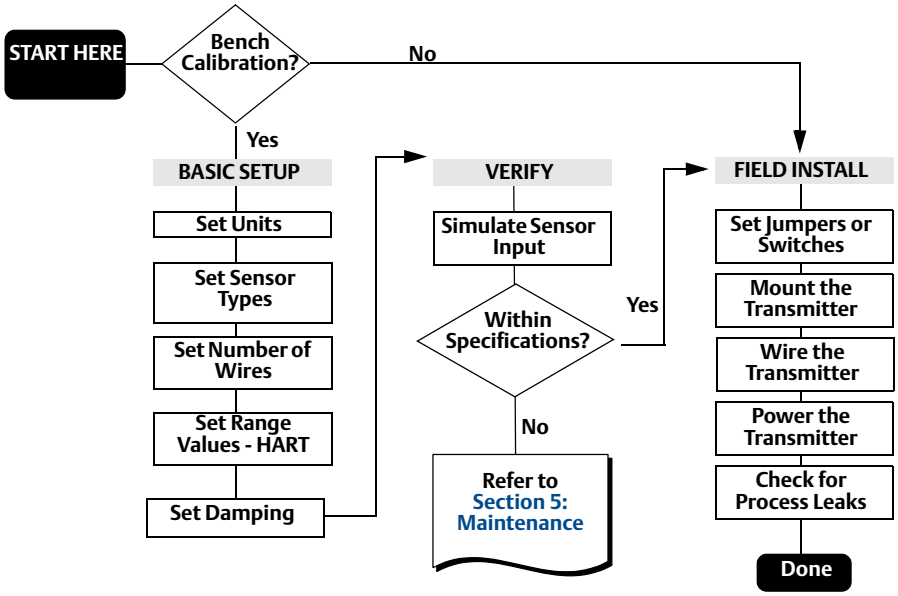

2.2.1 Setting the loop to manual

Set the process application loop to manual when sending or requesting data that would disrupt the loop or change the output of the transmitter. The field communicator or AMS Device Manager will prompt to set the loop to manual, when necessary. Acknowledging the prompt does not set the loop to manual, it is only a reminder. Setting the loop to manual is a separate operation.

2.2.2 Set the switches

HART®

Without an LCD display

1. If the transmitter is installed in a loop, set the loop to manual mode and disconnect the power.
2. ⚠ Remove the housing cover on the electronics side of the transmitter. Do not remove the transmitter cover in explosive atmospheres with a live circuit.
3. Set the switches to the desired position (see Figure 2-2).
4. ⚠ Replace the transmitter cover. Both transmitter covers must be fully engaged to meet explosion-proof requirements.
5. Apply power and set the loop to automatic mode.

With an LCD display

1. If the transmitter is installed in a loop, set the loop to manual mode and disconnect the power.
2. ⚠ Remove the housing cover on the electronics side of the transmitter. Do not remove the transmitter cover in explosive atmospheres with a live circuit.
3. Unscrew the LCD display screws and gently slide the meter straight off.
4. Set the switches to the desired position (see Figure 2-2).
5. Gently slide the LCD display back into place, taking extra precautions with the 10 pin connection.
6. Replace and tighten the LCD display screws to secure the LCD display.
7. ⚠ Replace the transmitter cover. Both transmitter covers must be fully engaged to meet explosion-proof requirements.
8. Apply power and set the loop to automatic mode.

FOUNDATION fieldbus

Without an LCD display

1. If the transmitter is installed in a loop, set the loop to Out-of-Service (OOS) mode (if applicable) and disconnect the power.
2. ⚠ Remove the housing cover on the electronics side of the transmitter. Do not remove the transmitter cover in explosive atmospheres with a live circuit.
3. Set the switches to the desired position (see Figure 2-1).
4. ⚠ Replace the transmitter cover. Both transmitter covers must be fully engaged to meet explosion-proof requirements.
5. Apply power and set the loop to In-Service mode.

With an LCD display

1. If the transmitter is installed in a loop, set the loop to OOS (if applicable) and disconnect the power.
2. ⚠ Remove the housing cover on the electronics side of the transmitter. Do not remove the transmitter cover in explosive atmospheres with a live circuit.
3. Unscrew the LCD display screws and gently pull the meter straight off.
4. Set the switches to the desired position.
5. Replace and tighten the LCD display screws to secure the LCD display.
6. ⚠ Replace the transmitter cover. Both transmitter covers must be fully engaged to meet explosion-proof requirements.
7. Apply power and set the loop to In-Service mode.

Figure 2-2. Transmitter Switch Locations

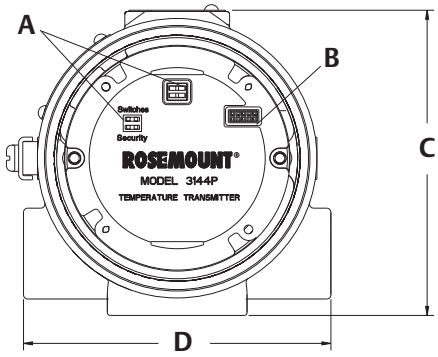

Dimensions are in inches (millimeters).

A. Switches[1]
B. LCD display connector
C. 4.4 (112)
D. 4.4 (112)

(1) Alarm and Security (HART), Simulate and Write Protect (FOUNDATION fieldbus)

Write protect switch (HART and FOUNDATION fieldbus)

The transmitter is equipped with a write-protect switch that can be positioned to prevent accidental or deliberate change of configuration data.

Alarm switch (HART)

An automatic diagnostic routine monitors the transmitter during normal operation. If the diagnostic routine detects a sensor failure or an electronics failure, the transmitter goes into alarm (high or low, depending on the position of the failure mode switch).

The analog alarm and saturation values used by the transmitter depend on whether it is configured to standard or NAMUR-compliant operation. These values are also custom-configurable in both the factory and the field using the HART Communications. The limits are:

- $21.0 \leq I \leq 23$ for high alarm
- $3.5 \leq I \leq 3.75$ for low alarm

Table 2-1. Values for standard and NAMUR operation

Standard operation (factory default)		NAMUR-compliant operation	
Fail High	$21.75\ mA \leq I \leq 23.0\ mA$	Fail High	$21\ mA \leq I \leq 23.0\ mA$
High Saturation	$I \geq 20.5\ mA$	High Saturation	$I \geq 20.5\ mA$
Low Saturation	$I \leq 3.90\ mA$	Low Saturation	$I \leq 3.8\ mA$
Fail Low	$I \leq 3.75\ mA$	Fail Low	$I \leq 3.6\ mA$

Simulate switch (FOUNDATION fieldbus)

Simulate switch is used to replace the channel value coming from the Sensor Transducer Block. For testing purposes, it manually simulates the output of the Analog Input Block to a desired value.

2.3 Mounting

If possible, the transmitter should be mounted at a high point in the conduit run so moisture from the conduits will not drain into the housing. The terminal compartment could fill with water if the transmitter is mounted at a low point in the conduit run. In some instances, the installation of a poured conduit seal, such as the one pictured in Figure 2-4, is advisable. Remove the terminal compartment cover periodically and inspect the transmitter for moisture and corrosion.

Figure 2-3. Incorrect Conduit installation

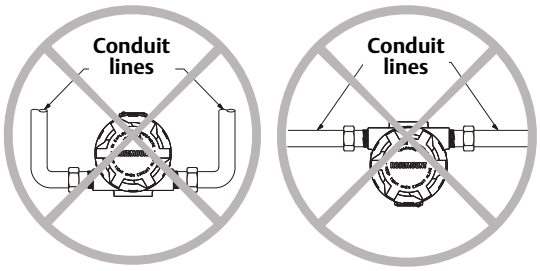

Figure 2-4. Recommended Mounting with Drain Seal

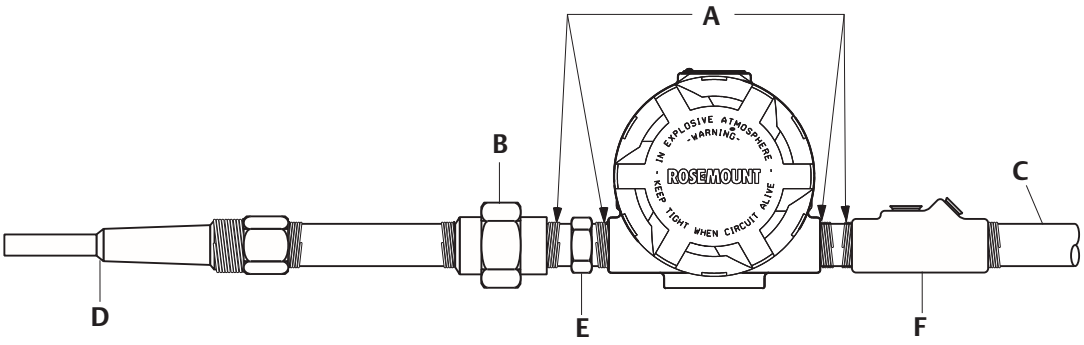

A. Sealing compound
B. Union coupling with extension
C. Conduit for field wiring
D. Thermowell
E. Sensor hex
F. Poured conduit seal (where required)

If mounting the transmitter directly to the sensor assembly, use the process shown in Figure 2-5. If mounting the transmitter apart from the sensor assembly, use conduit between the sensor and transmitter. The transmitter accepts male conduit fittings with $^{1}/_{2}$–14 NPT, M20 × 1.5 (CM 20), PG 13.5 (PG 11), or JIS G$^{1}/_{2}$ threads (M20 × 1.5 (CM 20), PG 13.5 (PG 11), or JIS G$^{1}/_{2}$ threads are provided by an adapter). Make sure only qualified personnel perform the installation.

The transmitter may require supplementary support under high-vibration conditions, particularly if used with extensive thermowell lagging or long extension fittings. Pipe-stand mounting, using one of the optional mounting brackets, is recommended for use in high-vibration conditions.

2.4 Installation

2.4.1 Typical North American installation

⚠ 1. Attach the thermowell to the pipe or process container wall. Install and tighten thermowells and sensors, then apply process pressure to perform a leak test.

2. Attach necessary unions, couplings, and extension fittings. Seal the fitting threads with PTFE tape (if required).

3. Turn the sensor into the thermowell or directly into the process (depending on installation requirements).

4. Verify all sealing requirements for severe environments or to satisfy code requirements.

5. Attach the transmitter to the thermowell/sensor assembly. Seal all threads with PTFE tape (if required).

6. Pull sensor leads through the extensions, unions, or couplings into the terminal side of the transmitter housing.

7. Install field wiring conduit to the remaining transmitter conduit entry.

⚠ 8. Pull the field wiring leads into the terminal side of the transmitter housing.

⚠ 9. Attach the sensor leads to the transmitter sensor terminals. Attach the power leads to the transmitter power terminals.

10. Attach and tighten both transmitter covers since both transmitter covers must be fully engaged to meet explosion-proof requirements.

Figure 2-5. Typical Direct Mounted Configuration

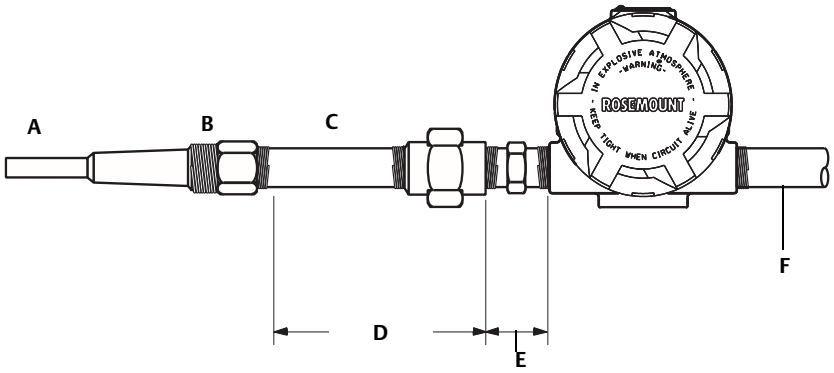

Dimensions are in inches (millimeters).
A. Thermowell
B. Extension
C. Union or coupling
D. Extension fitting length
E. 3.2 (81)
F. Conduit for field wiring (dc power)

Note
The National Electrical Code requires that a barrier or seal be used in addition to the primary (sensor) seal to prevent process fluid from entering the electrical conduit and continuing to the control room. Professional safety assistance is recommended for installation in potentially hazardous processes.

2.4.2 Typical European installation

⚠ 1. Mount the thermowell to the pipe or the process container wall. Install and tighten thermowells and sensors then apply pressure and perform a leak check before starting the process.

2. Attach a connection head to the thermowell.

3. Insert the sensor into the thermowell and wire it to the connection head, using the wiring diagram located on the inside of the connection head.

4. Mount the transmitter to a 2-inch (50 mm) pipe or a suitable panel using one of the optional mounting brackets. The B4 bracket is shown in Figure 2-6.

5. Attach cable glands to the shielded cable running from the connection head to the transmitter conduit entry.

6. Run the shielded cable from the opposite conduit entry on the transmitter back to the control room.

7. Insert the shielded cable leads through the cable entries into the connection head and the transmitter. Connect and tighten the cable glands.

⚠ 8. Connect the shielded cable leads to the connection head terminals, located inside of the connection head, and the sensor wiring terminals, located inside of the transmitter housing. Avoid contact with the leads and the terminals.

Figure 2-6. Typical Remote Mounted Configuration with Cable Glands

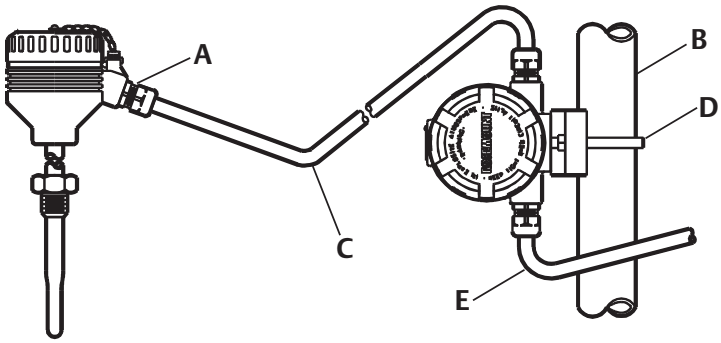

A. Cable gland
B. 2-inch pipe
C. Shielded cable from sensor to transmitter
D. B4 Mounting bracket
E. Shielded cable from transmitter to control room

2.4.3 In conjunction with a Rosemount 333 HART Tri-Loop™ (HART / 4–20 mA only)

Use the dual-sensor option 3144P transmitter that is operating with two sensors in conjunction with a 333 HART Tri-Loop HART-to-Analog Signal Converter to acquire an independent 4–20 mA analog output signal for each sensor input. The 3144P transmitter can be configured to output four of the six following digital process variables:

- Sensor 1
- Sensor 2
- Differential temperature
- Average temperature
- First good temperature
- Transmitter terminal temperature

The HART Tri-Loop reads the digital signal and outputs any or all of these variables into as many as three separate 4–20 mA analog channels.

Refer to Figure 2-7 for basic installation information. Refer to the 333 HART Tri-Loop HART-to-Analog Signal Converter Reference Manual (document number 00809-0100-4754) for complete installation information.

Figure 2-7. HART Tri-Loop Installation Flowchart(1)

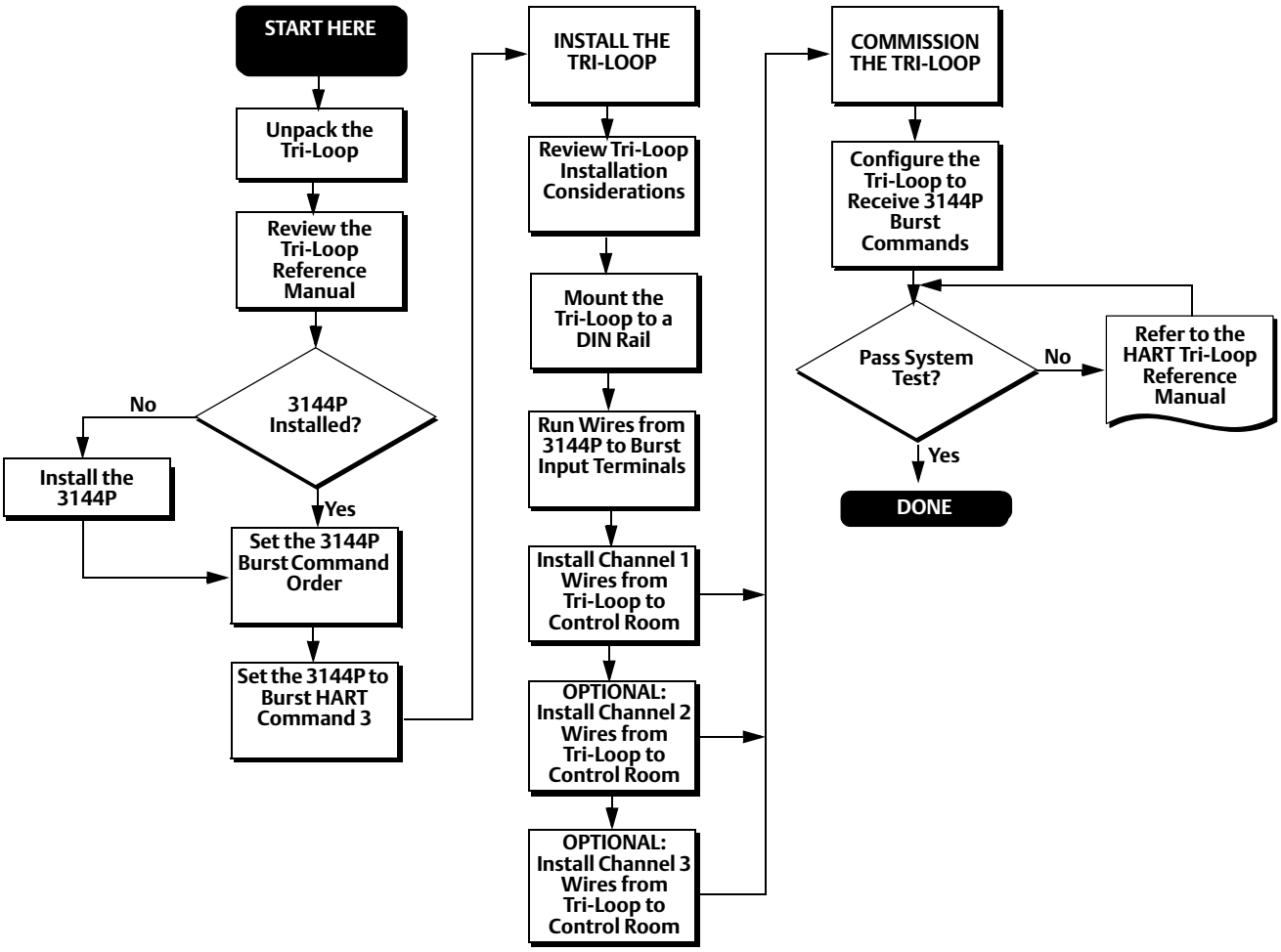

2.4.4 LCD display

Transmitters ordered with the LCD display option (code M5) are shipped with the LCD display installed. After-market installation of the LCD display on a conventional 3144P transmitter requires a small instrument screwdriver and the LCD display kit, which includes:

- LCD display assembly
- Extended cover with cover O-ring in place
- Captive screws (quantity 2)
- 10-pin interconnection header

(1) See *"Use with the HART Tri-Loop" on page 99* for configuration information.

To install the LCD display:

1. If the transmitter is installed in a loop, set the loop to manual (HART) / out-of-service (FOUNDATION fieldbus) mode and disconnect the power.

⚠ 2. Remove the housing cover from the electronics side of the transmitter. Do not remove the transmitter covers in explosive atmospheres with a live circuit.

3. Ensure that the transmitter write protect switch is set to the **Off** position. If transmitter security is **On**, the transmitter cannot be configured to recognize the LCD display. If security **On** is desired, configure the transmitter for the LCD display, and then install the meter.

4. Insert the interconnection header in the 10-pin socket on the face of the electronics module. Insert the pins into the electronics LCD display interface.

5. The meter can be rotated in 90-degree increments for easy viewing. Position one of the four 10-pin sockets on the back of the meter to accept the interconnection header.

6. Attach the LCD display assembly to the interconnection pins, then thread and tighten the LCD display screws into the holes on the electronics module.

⚠ 7. Attach the extended cover; tighten at least one-third turn after the O-ring contacts the transmitter housing. Both transmitter covers must be fully engaged to meet explosion proof requirements.

8. Apply power and set the loop to automatic (HART) / in-service (FOUNDATION fieldbus) mode.

Once the LCD display is installed, configure the transmitter to recognize the meter option. Refer to "LCD display options" on page 94 (HART) or "LCD display transducer block" on page 152 (FOUNDATION fieldbus).

Note
Observe the following LCD display temperature limits:
Operating:–4 to 185 °F (–20 to 85 °C)
Storage:–50 to 185 °F (–45 to 85 °C)

2.4.5 Multichannel installation (HART / 4–20 mA only)

Several transmitters can be connected to a single master power supply (see Figure 2-8). In this case, the system may be grounded only at the negative power supply terminal. In multichannel installations, where several transmitters depend on one power supply and the loss of all transmitters would cause operational problems, consider an uninterrupted power supply or a back-up battery. The diodes shown in Figure 2-8 prevent unwanted charging or discharging of the back-up battery.

Figure 2-8. Multichannel Installations

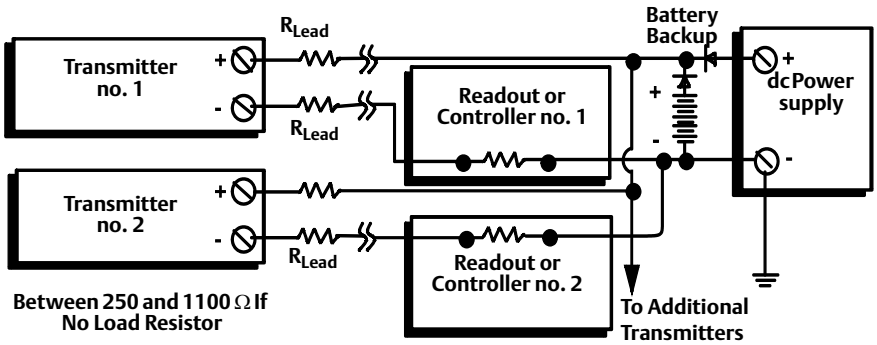

2.5 Wiring

2.5.1 HART / 4–20 mA

Field wiring

⚠ The power to the transmitter is supplied over the signal wiring. Signal wiring does not need to be shielded, but twisted pairs should be used for best results. Do not run unshielded signal wiring in conduit or open trays with power wiring or near heavy electrical equipment because high voltage may be present on the leads and may cause an electrical shock. To wire the transmitter for power:

⚠ 1. Remove the transmitter covers. Do not remove the transmitter covers in an explosive atmosphere when the circuit is live.

2. Connect the positive power lead to the terminal marked "+" and the negative power lead to the terminal marked "–" as shown in Figure 2-9. Crimped lugs are recommended when wiring to screw terminals.

3. Tighten the terminal screws to ensure good contact is made. No additional power wiring is required.

⚠ 4. Replace the transmitter covers making sure both transmitter covers are fully engaged to meet explosion-proof requirements.

Note
Do not apply high voltage (e.g., AC line voltage) to the power or sensor terminals, since high voltage can damage the unit.

Figure 2-9. Transmitter Terminal Block

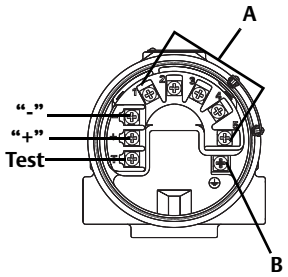

Wiring connections

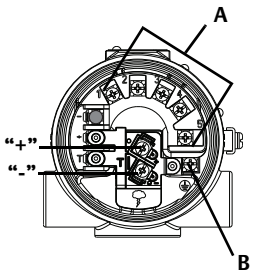

Wiring connections
(with "T1" integral transient protection option)

A. Sensor terminals (1 – 5)
B. Ground

Figure 2-10. Sensor Wiring Diagram for HART / 4–20 mA

3144P Single-sensor connections diagram

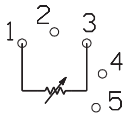

2-wire RTD and Ohms

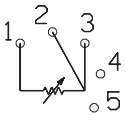

3-wire RTD and Ohms(2)

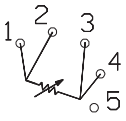

4-wire RTD and Ohms

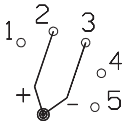

T/Cs and Millivolts

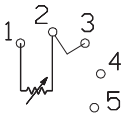

RTD with Compensation Loop(1)

3144P dual-sensor connections diagram



ΔT/Hot Backup/Dual Sensor with 2 RTDs

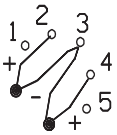

ΔT/Hot Backup/Dual Sensor with 2 Thermocouples

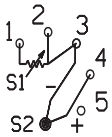

ΔT/Hot Backup/Dual Sensor with RTDs/ Thermocouples(2)

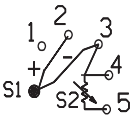

ΔT/Hot Backup/Dual Sensor with RTDs/ Thermocouples(2)



ΔT/Hot Backup/Dual Sensor with 2 RTDs with Compensation Loop(2)

(1) Transmitter must be configured for a 3-wire RTD in order to recognize an RTD with a compensation loop.
(2) Emerson Process Management provides 4-wire sensors for all single-element RTDs. Use these RTDs in 2-wire or 3-wire configurations by leaving the unneeded leads disconnected and insulated with electrical tape.

Power/current loop connections

Use copper wire of a sufficient size to ensure that the voltage across the transmitter power terminals does not go below 12.0 Vdc.

1. Connect the current signal leads as shown in Figure 2-11.
2. Recheck the polarity and connections.
3. Turn the power **ON**.

For information about multichannel installations, refer to page 20.

Note
Do not connect the power/signal wiring to the test terminal. The voltage present on the power/signal leads may burn out the reverse-polarity protection diode built into the test terminal. If the test terminal's reverse polarity protection diode is burned out by the incorrect power/signal wiring, the transmitter can still be operated by jumping the current from the test terminal to the "–" terminal. See "Test terminal (HART / 4–20 mA only)" on page 176 for use of the terminal.

Figure 2-11. Connecting a Field Communicator to a Transmitter Loop (HART/ 4–20 mA).

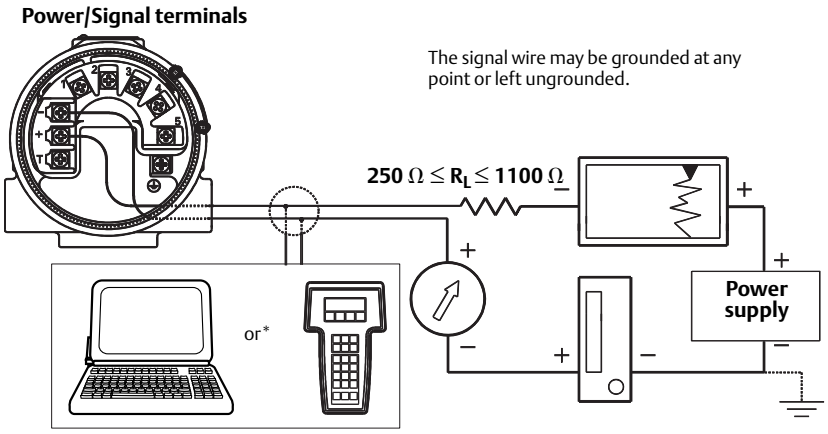

AMS Device Manager software or a Field Communicator can be connected at any termination point in the signal loop. The signal loop must have between 250 and 1100 ohms load for communications.

2.5.2 FOUNDATION fieldbus

Figure 2-12. Transmitter Terminal Block

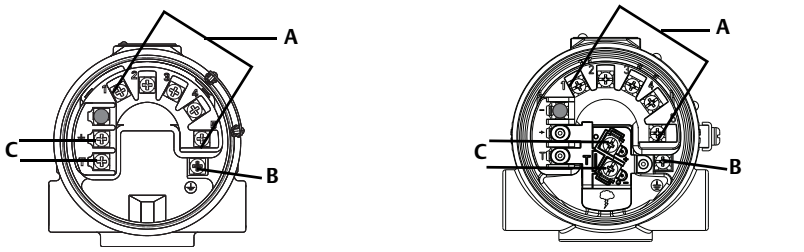

Wiring connections

Wiring connections (with "T1" integral transient protection option)

A. Sensor terminals (1 – 5)
B. Ground
C. Power terminals

Figure 2-13. Sensor Wiring Diagram for FOUNDATION fieldbus

3144P single-sensor connections diagram

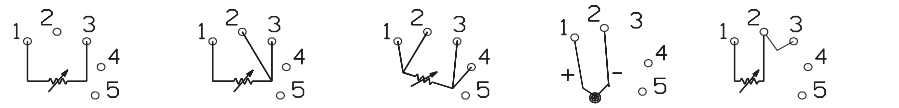

2-wire RTD and Ohms | **3-wire RTD and Ohms**(2) | **4-wire RTD and Ohms** | **T/Cs and Millivolts** | **RTD with Compensation Loop**(1)

3144P dual-sensor connections diagram

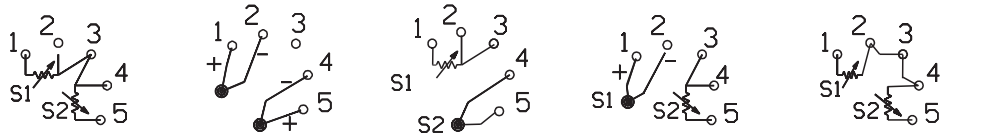

ΔT/Hot Backup/Dual Sens with 2 RTDs | **ΔT/Hot Backup/Dual Sensor with 2 Thermocouples** | **ΔT/Hot Backup/Dual Sensor with RTDs/ Thermocouples**(2) | **ΔT/Hot Backup/Dual Sensor with RTDs/ Thermocouples**(2) | **ΔT/Hot Backup/Dual Sensor with 2 RTDs with Compensation Loop**(2)

(1) Transmitter must be configured for a 3-wire RTD in order to recognize an RTD with a compensation loop.
(2) Emerson Process Management provides 4-wire sensors for all single-element RTDs. Use these RTDs in 2-wire or 3-wire configurations by leaving the unneeded leads disconnected and insulated with electrical tape.

2.5.3 Sensor connections

⚠ The correct sensor wiring connections to the transmitter sensor terminals are shown in Figure 2-9 on page 21 (HART) and Figure 2-14 on page 25 (FOUNDATION fieldbus). To ensure an adequate sensor connection, anchor the sensor lead wires beneath the flat washer on the terminal screw. Do not remove the transmitter cover in explosive atmospheres if the circuit is live. Both transmitter covers must be fully engaged to meet explosion-proof requirements. Use extreme caution when making contact with the leads and terminals.

RTD or ohm inputs

If the transmitter is mounted remotely from a 3- or 4-wire RTD, it will operate within specifications, without recalibration, for lead wire resistances of up to 60 ohms per lead (equivalent to 1,000 feet of 20 AWG wire). In this case, the leads between the RTD and transmitter should be shielded. If using only two leads (or a compensation loop lead wire configuration), both RTD leads are in series with the sensor element, so significant errors can occur if the lead lengths exceed one foot of 20 AWG wire. For longer runs, attach a third or fourth lead as described above. To eliminate 2-wire lead resistance error, the 2-wire offset command can be used. This allows the user to input the measured lead wire resistance, resulting in the transmitter adjusting the temperature to correct the error.

Thermocouple or millivolt inputs

For direct-mount applications, connect the thermocouple directly to the transmitter. If mounting the transmitter remotely from the sensor, use appropriate thermocouple extension wire. Make connections for millivolt inputs with copper wire. Use shielding for long runs of wire.

Note
For HART transmitters, the use of two grounded thermocouples with a dual option 3144P transmitter is not recommended. For applications in which the use of two thermocouples is desired, connect either two ungrounded thermocouples, one grounded and one ungrounded thermocouple, or one dual element thermocouple.

2.6 Power supply

HART

An external power supply is required to operate the 3144P (not included). The input voltage range of the transmitter is 12 to 42.4 Vdc. This is the power required across the transmitter power terminals. The power terminals are rated to 42.4 Vdc. With 250 ohms of resistance in the loop, the transmitter requires a minimum of 18.1 Vdc for communication.

The power supplied to the transmitter is determined by the total loop resistance and should not drop below the lift-off voltage. The lift-off voltage is the minimum supply voltage required for any given total loop resistance. See Figure 2-14 to determine the required supply voltage. If the power drops below the lift-off voltage while the transmitter is being configured, the transmitter may output incorrect information.

The dc power supply should provide power with less than 2% ripple. The total resistance load is the sum of the resistance of the signal leads and the load resistance of any controller, indicator, or related piece of equipment in the loop. Note that the resistance of intrinsic safety barriers, if used, must be included.

Note
Permanent damage to the transmitter could result if the voltage drops below 12.0 Vdc at the power terminals, when changing transmitter configuration parameters.

Figure 2-14. Load Limits

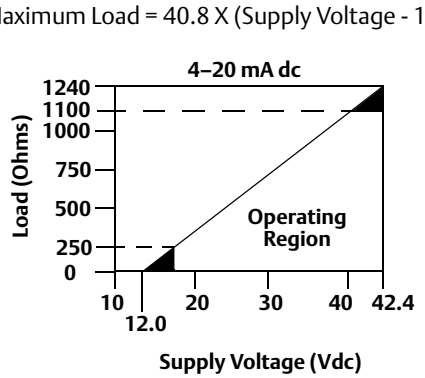

FOUNDATION fieldbus

Powered over FOUNDATION fieldbus with standard fieldbus power supplies, the transmitter operates between 9.0 and 32.0 Vdc, 11 mA maximum. Transmitter power terminals are rated to 42.4 Vdc.

The power terminals on the 3144P with FOUNDATION fieldbus are polarity insensitive.

2.6.1 Surges/transients

The transmitter will withstand electrical transients of the energy level usually encountered in static discharges or induced switching; however, high-voltage transients, such as those induced in wiring from nearby lightning strikes, can damage both the transmitter and the sensor.

The integral transient protection terminal block (option code T1) protects against high-voltage transients. The integral transient protection terminal block is available as an ordered option, or as an accessory. Refer to "Transient protection (option code T1)" on page 198 for more information.

2.6.2 Grounding

Sensor shielding

The currents in the leads induced by electromagnetic interference can be reduced by shielding. Shielding carries the current to ground and away from the leads and electronics. If the ends of the shields are adequately grounded, only a small amount of current will actually enter the transmitter.

If the ends of the shield are left ungrounded, voltage is created between the shield and the transmitter housing and also between the shield and earth at the element end. The transmitter may not be able to compensate for this voltage, causing it to lose communication and/or go into alarm. Instead of the shield carrying the currents away from the transmitter, the currents will now flow through the sensor leads into the transmitter circuitry where it will interfere with the circuit operation.

Shielding recommendations

The following are recommended practices from API Standard 552 (Transmission Standard) section 20.7, and from field and laboratory testing. If more than one recommendation is given for a sensor type, start with the first technique shown or the technique that is recommended for the facility by its installation drawings. If the technique does not eliminate the transmitter alarms, try another technique. If all of the techniques do not eliminate or prevent the transmitter alarms because of high EMI, contact an Emerson Process Management representative.

Ungrounded thermocouple, mV, and RTD/ohm Inputs

Option 1: Recommended for ungrounded transmitter housing

1. Connect the signal wiring shield to the sensor wiring shield.
2. Ensure the two shields are tied together and electrically isolated from the transmitter housing.
3. Ground the shield at the power supply end only.
4. Ensure the shield at the sensor is electrically isolated from the surrounding fixtures that may be grounded.
   a. Connect shields together, electrically isolated from the transmitter.

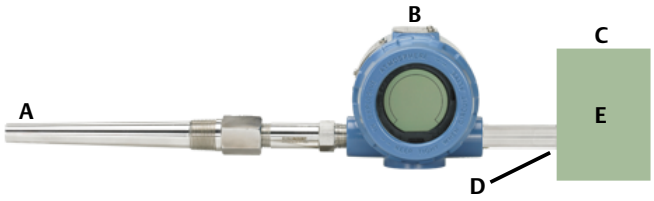

A. Sensor Wires **C. 4-20 mA loop** **E. DCS**
B. Transmitter **D. Shield ground point**

Option 2: Recommended for grounded transmitter housing

1. Ground the transmitter housing then connect the sensor wiring shield to the transmitter housing (see "Transmitter housing" on page 27).
2. Ensure the shield at the sensor end is electrically isolated from surrounding fixtures that may be grounded.
3. Ground the signal wiring shield at the power supply end.

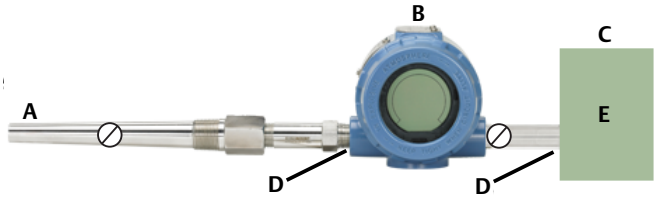

A. Sensor Wires **C. 4-20 mA loop** **E. DCS**
B. Transmitter **D. Shield ground point**

Option 3

1. Ground the sensor wiring shield at the sensor, if possible.
2. Ensure the sensor wiring and signal wiring shields are electrically isolated from the transmitter housing and other fixtures that may be grounded.
3. Ground the signal wiring shield at the power supply end.

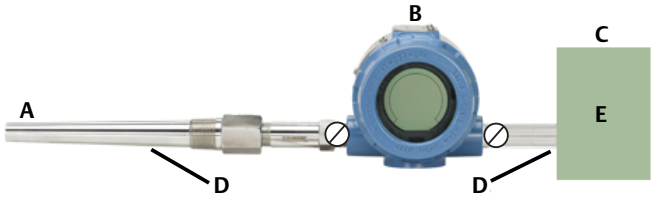

A. Sensor Wires **C. 4-20 mA loop** **E. DCS**
B. Transmitter **D. Shield ground point**

Grounded thermocouple inputs

1. Ground the sensor wiring shield at the sensor.
2. Ensure the sensor wiring and signal wiring shields are electrically isolated from the transmitter housing and other fixtures that may be grounded.
3. Ground the signal wiring shield at the power supply end.

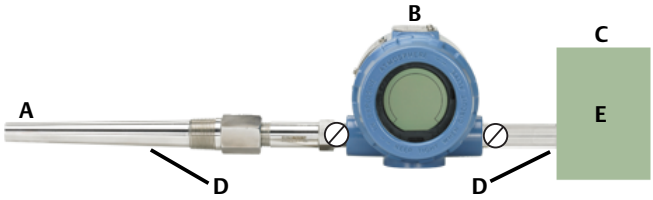

A. Sensor Wires **C. 4-20 mA loop** **E. DCS**
B. Transmitter **D. Shield ground point**

Transmitter housing

Ground the transmitter housing according to local or site electrical requirements. An internal ground terminal is standard. An optional external ground lug assembly (Option Code G1) can also be ordered, if needed. Ordering certain hazardous approvals automatically includes an external ground lug (see Table A-3 on page 206).

Section 3 HART® commissioning

Overview . . . . . page 29
Confirm HART revision capability . . . . . page 29
Safety messages . . . . . page 30
Field communicator . . . . . page 30
Review configuration data . . . . . page 40
Check output . . . . . page 40
Configuration . . . . . page 40
Device output configuration . . . . . page 91
Device information . . . . . page 94
Measurement filtering . . . . . page 95
Diagnostics and service . . . . . page 97
Multidrop communication . . . . . page 98
Use with the HART Tri-Loop . . . . . page 99
Calibration . . . . . page 121
Trim the transmitter . . . . . page 122
Troubleshooting . . . . . page 133

3.1 Overview

This section contains information on commissioning and tasks that should be performed on the bench prior to installation. This section contains 3144P HART configuration information only. The field communicator and instructions are given to perform configuration functions.

For convenience, field communicator fast key sequences are labeled “Fast Keys” for each software function below the appropriate headings.

HART 7 Fast Keys	1, 2, 3, etc.

AMS™ Device Manager help can be found in the AMS Device Manager on-line guides within the AMS Device Manager system.

3.2 Confirm HART revision capability

If using HART based control or asset management systems, confirm the HART capability of those systems prior to transmitter installation. Not all systems are capable of communicating with HART Revision 7 protocol. This transmitter can be configured for either HART Revision 5 or Revision 7.

Switch HART revision mode

If the HART configuration tool is not capable of communicating with HART Revision 7, the 3144P will load a generic menu with limited capability. The following procedures will switch the HART revision mode from the generic menu.

1. Manual Setup>Device Information>Identification>Message.
   a. To change to HART Revision 5, Enter: “HART5” in the Message field
   b. To change to HART Revision 7, Enter: “HART7” in the Message field

3.3 Safety messages

Instructions and procedures in this section may require special precautions to ensure the safety of the personnel performing the operations. Information that raises potential safety issues is indicated by a warning symbol (⚠). Please refer to the following safety messages before performing an operation preceded by this symbol.

⚠ WARNING

Explosions may result in death or serious injury.

- Do not remove the instrument cover in explosive atmospheres when the circuit is live.
- Before connecting a Field Communicator in an explosive atmosphere, make sure the instruments in the loop are installed in accordance with intrinsically safe or non-incendive field wiring practices.
- Both covers must be fully engaged to meet explosion–proof requirements.

Electrical shock could cause death or serious injury. If the sensor is installed in a high-voltage environment and a fault or installation error occurs, high voltage may be present on transmitter leads and terminals.

- Use extreme caution when making contact with the leads and terminals.

3.4 Field communicator

The Menu Tree and Fast Key sequences use the following device revisions:

- Device Dashboard: Device Revision 5 and 6, DD v1

The field communicator exchanges information with the transmitter from the control room, the instrument site, or any wiring termination point in the loop. To facilitate communication, connect the field communicator in parallel with the transmitter (see Figure 2-11) using the loop connection ports on the top of the field communicator. The connections are non-polarized. Do not make connections to the NiCad recharger jack in explosive atmospheres. Before connecting the field communicator in an explosive atmosphere, make sure the instruments in the loop are installed according to intrinsically safe or non-incendive field wiring practices

3.4.1 Updating the HART communication software

The field communicator software may need to be updated to take advantage of the additional features available in the latest 3144P. Perform the following steps to determine if an upgrade is necessary.

1. Choose “Rosemount” from the list of manufacturers 5 and 6 and “3144 Temp” from the list of models.

2. If the Field Device Rev choices include “Dev v1,” “Dev v2,” “Dev v3,” or “Dev v4” (with any DD version), then the user will be able to connect to the device with reduced functionality. To unlock full functionality, download and install the new DD.

Note
The original release of the safety-certified 3144P uses the name “3144P SIS” from the model list and requires “Dev v2, DD v1.”

Note
If communication is initiated with an improved 3144P using a communicator that only has a previous version of the transmitter device descriptors (DDs), the communicator will display the following message:

NOTICE: Upgrade to the field communicator software to access new XMTR functions. Continue with old description?

YES: The communicator will communicate properly with the transmitter using the existing transmitter DDs. However, new software features of the DD in the communicator will not be accessible.
NO: The communicator will default to a generic transmitter functionality.

If **YES** is selected after the transmitter is configured to utilize the new features of the improved transmitters (such as Dual Input configuration or one of the added sensor input types–DIN Type L or DIN Type U), the user will experience trouble communicating with the transmitter and will be prompted to turn the communicator off. To prevent this from happening, either upgrade the communicator to the latest DD or answer **NO** to the above question and default to the generic transmitter functionality.

3.4.2 Device dashboard menu tree

Figure 3-1. 3144P Device Dashboard HART 5- Overview

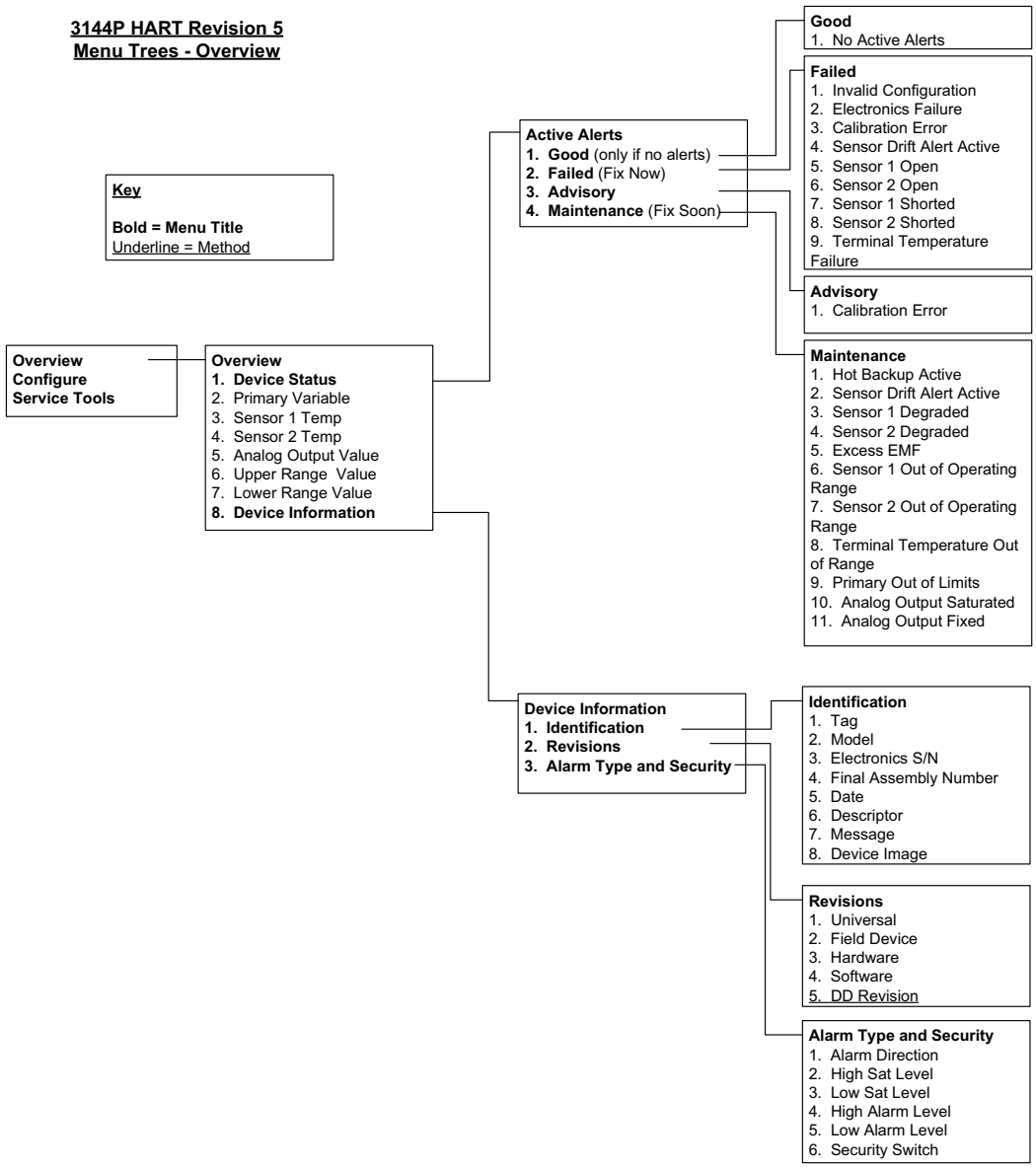

Figure 3-2. 3144P Device Dashboard HART 5 - Configure

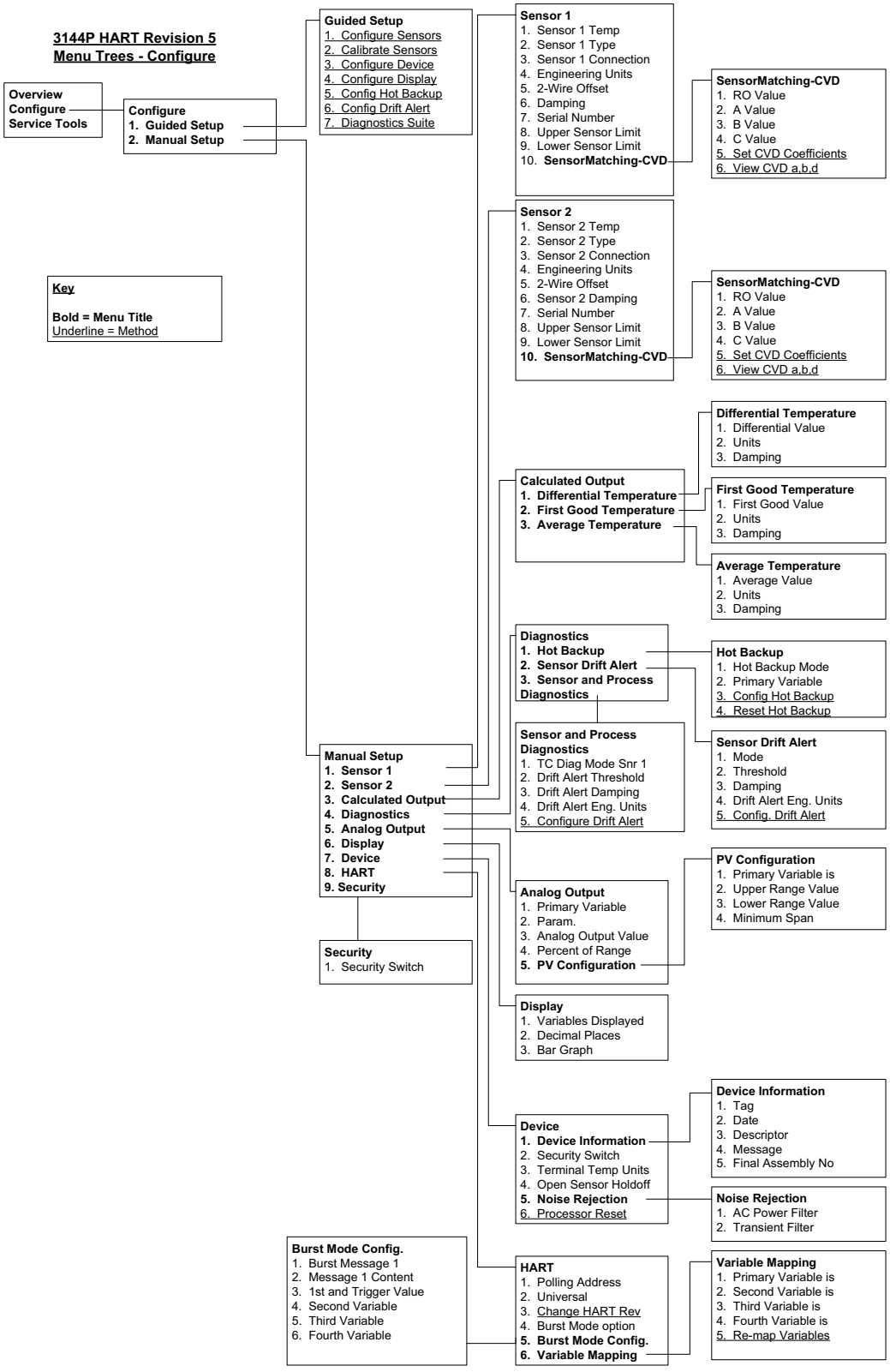

Figure 3-3. 3144P Device Dashboard HART 5- Service Tools

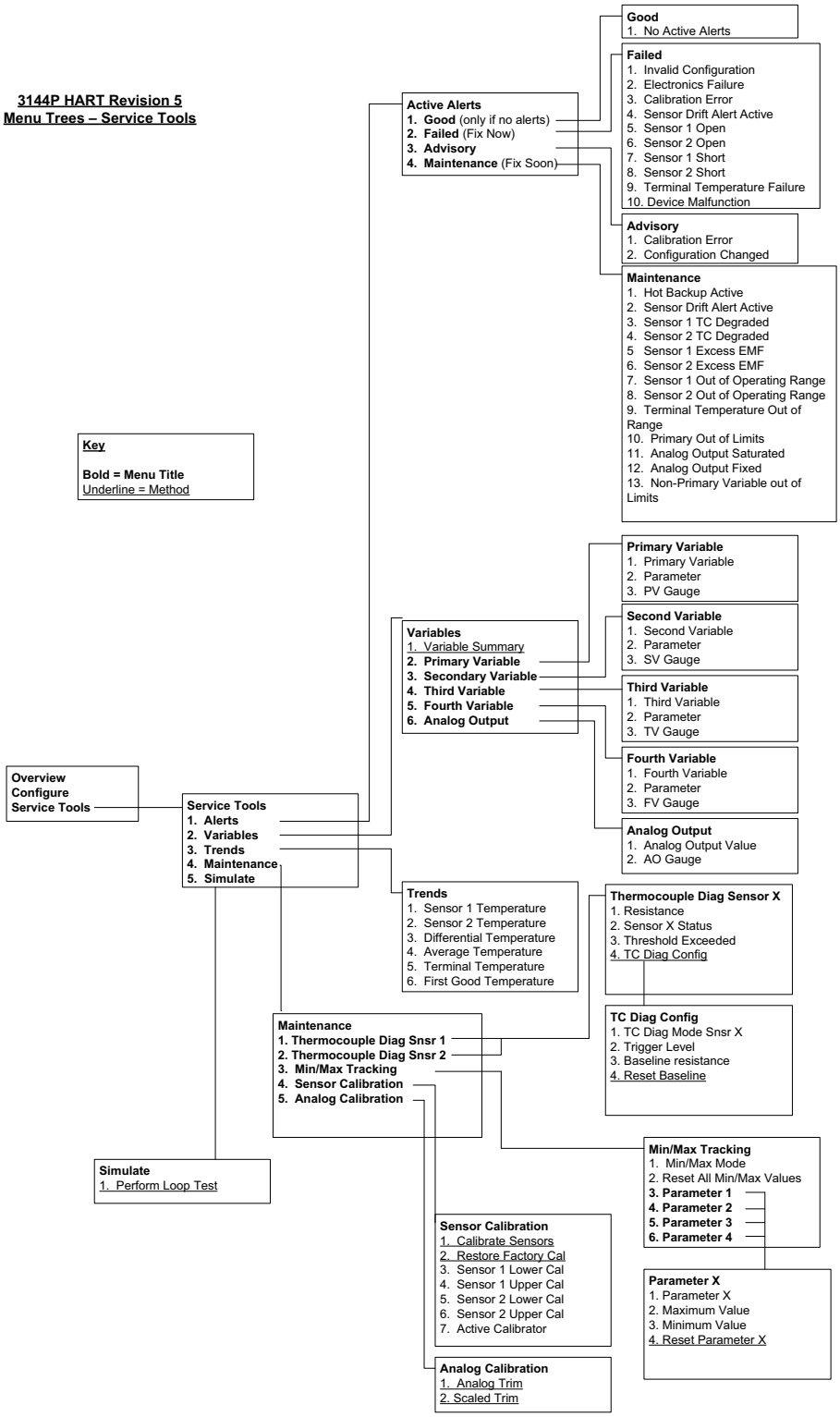

Figure 3-4. 3144P Device Dashboard HART 7- Overview

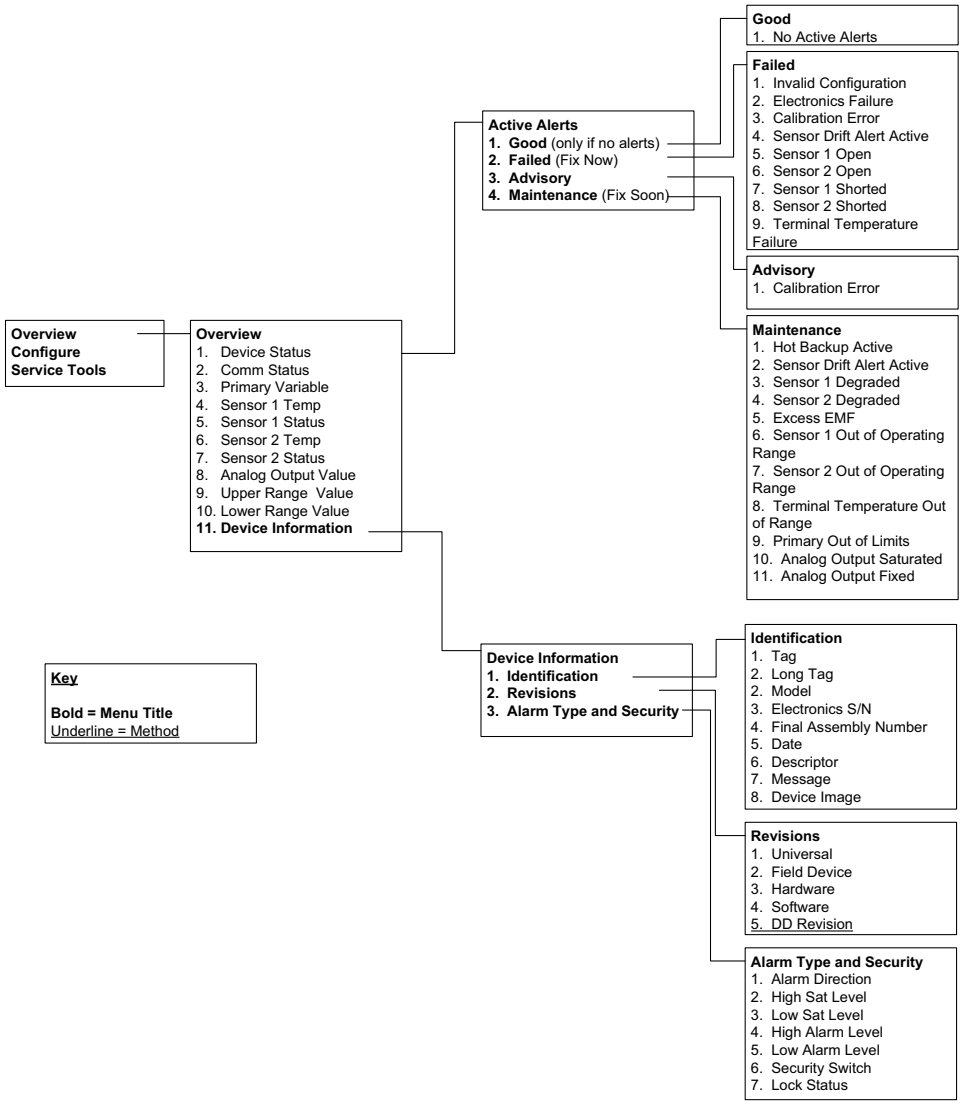

Figure 3-5. 3144P Device Dashboard HART 7- Configure

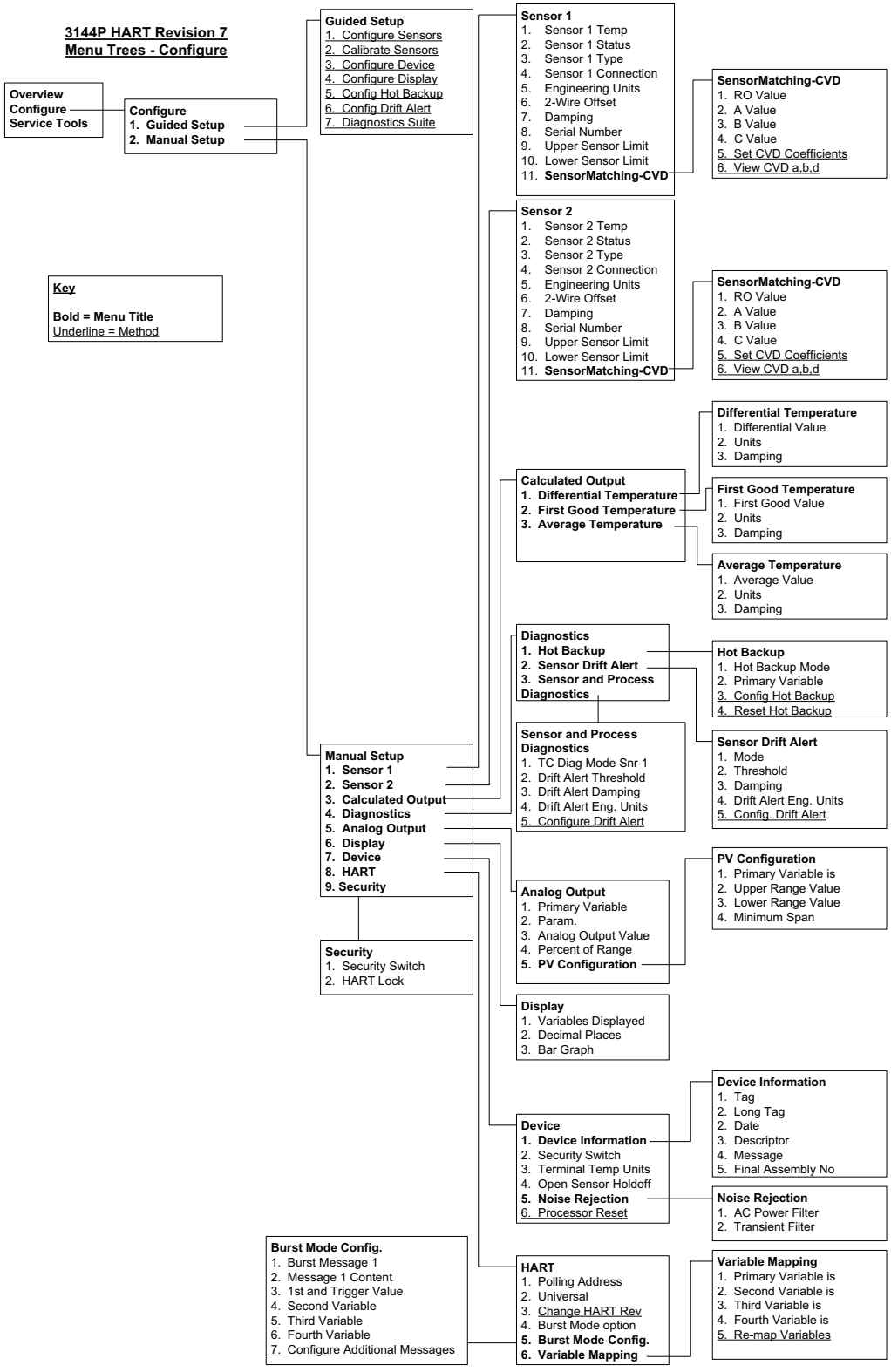

Figure 3-6. 3144P Device Dashboard HART 7- Service Tools

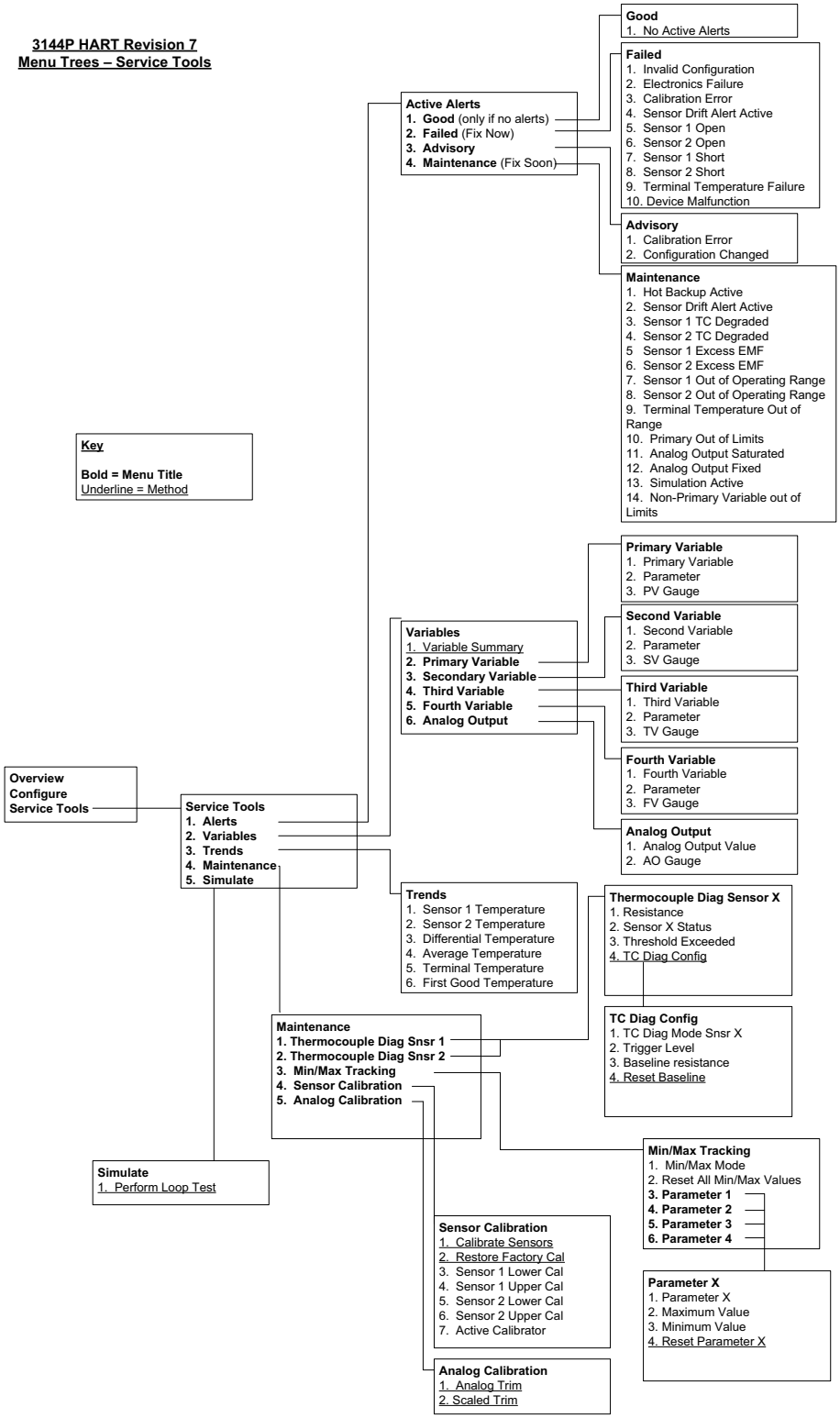

3.4.3 Device dashboard Fast Key sequences

Fast key sequences are listed below for common 3144P transmitter functions.

Note
The fast key sequences assume that "Device Revision Dev 5 (HART 5) or v6 (HART 7), DD v1" is being used. Table 3-1 provides alphabetical function lists for all Field Communicator tasks as well as their corresponding fast key sequences.

Table 3-1. Fast Key Sequences

Function	HART 5 Fast Keys	HART 7 Fast Keys
2-wire Offset Sensor 1	2, 2, 1, 5	2, 2, 1, 6
2-wire Offset Sensor 2	2, 2, 2, 5	2, 2, 2, 6
Alarm Values	2, 2, 5, 6	2, 2, 5, 6
Analog Calibration	3, 4, 5	3, 4, 5
Analog Output	2, 2, 5	2, 2, 5
Average Temperature Setup	2, 2, 3, 3	2, 2, 3, 3
Burst Mode	N/A	2, 2, 8, 4
Comm Status	N/A	1, 2
Configure additional messages	N/A	2, 2, 8, 4, 7
Configure Hot Backup	2, 2, 4, 1, 3	2, 2, 4, 1, 3
Date	2, 2, 7, 1, 2	2, 2, 7, 1, 3
Descriptor	2, 2, 7, 1, 3	2, 2, 7, 1, 4
Device Information	2, 2, 7, 1	2, 2, 7, 1
Differential Temperature Setup	2, 2, 3, 1	2, 2, 3, 1
Filter 50/60 Hz	2, 2, 7, 5, 1	2, 2, 7, 5, 1
Find Device	N/A	3, 4, 6, 2
First Good Temperature Setup	2, 2, 3, 2	2, 2, 3, 2
Hardware Revision	1, 8, 2, 3	1, 11, 2, 3
HART Lock	N/A	2, 2, 9, 2
Intermittent Sensor Detect	2, 2, 7, 5, 2	2, 2, 7, 5, 2
Lock Status	N/A	1, 11, 3, 7
Long Tag	N/A	2, 2, 7, 2
Loop Test	3, 5, 1	3, 5, 1
LRV (Lower Range Value)	2, 2, 5, 5, 3	2, 2, 5, 5, 3
Message	2, 2, 7, 1, 4	2, 2, 7, 1, 5
Open Sensor Holdoff	2, 2, 7, 4	2, 2, 7, 4
Percent Range	2, 2, 5, 4	2, 2, 5, 4

Table 3-1. Fast Key Sequences

Function	HART 5 Fast Keys	HART 7 Fast Keys
Sensor 1 Configuration	2, 2, 1	2, 2, 2
Sensor 1 Serial Number	2, 2, 1, 7	2, 2, 1, 8
Sensor 1 Setup	2, 2, 1	2, 2, 1
Sensor 1 Status	N/A	2, 2, 1, 2
Sensor 1 Type	2, 2, 1, 2	2, 2, 1, 3
Sensor 1 Unit	2, 2, 1, 4	2, 2, 1, 5
Sensor 2 Configuration	2, 2, 2	2, 2, 2
Sensor 2 Serial Number	2, 2, 2, 7	2, 2, 2, 8
Sensor 2 Setup	2, 2, 2	2, 2, 2
Sensor 2 Status	N/A	2, 2, 2, 2
Sensor 2 Type	2, 2, 2, 2	2, 2, 2, 3
Sensor 2 Unit	2, 2, 2, 4	2, 2, 2, 5
Sensor Drift Alert	2, 2, 4, 2	2, 2, 4, 2
Simulate Device Variables	N/A	3, 5, 2
Software Revision	1, 8, 2, 4	1, 11, 2, 4
Tag	2, 2, 7, 1, 1	2, 2, 7, 1, 1
Terminal Temperature Units	2, 2, 7, 3	2, 2, 7, 3
URV (Upper Range Value)	2, 2, 5, 5, 2	2, 2, 5, 5, 2
Variable Mapping	2, 2, 8, 5	2, 2, 8, 5
Thermocouple Diagnostic	2, 1, 7, 1	2, 1, 7, 1
Min/Max Tracking	2, 1, 7, 2	2, 1, 7, 2

3.5 Review configuration data

Before operating the 3144P in an actual installation, review all of the factory-set configuration data to ensure that it reflects the current application.

3.5.1 Review

HART 5 Fast Keys	1, 4
HART 7 Fast keys	2, 2

Field communicator

Review the transmitter configuration parameters set at the factory to ensure accuracy and compatibility with the particular application. After activating the *Review* function, scroll through the data list and check each variable. If changes to the transmitter configuration data are necessary, refer to "Configuration" below.

3.6 Check output

Before performing other transmitter online operations, review the configuration of the 3144P digital output parameters to ensure that the transmitter is operating properly.

3.6.1 Analog output

HART 5 Fast Keys	2, 2, 5
HART 7 Fast Keys	2, 2, 5

Field communicator

The 3144P process variables provide the transmitter output. The PROCESS VARIABLE menu displays the process variables, including sensed temperature, percent range, and analog output. These process variables are continuously updated. The primary variable is 4–20 mA analog signal.

3.7 Configuration

The 3144P must have certain basic variables configured to operate. In many cases, these variables are pre-configured at the factory. Configuration may be required if the configuration variables need revision.

3.7.1 Variable mapping

HART 5 Fast Keys	2, 2, 8, 5
HART 7 Fast Keys	2, 2, 8, 5

Field communicator

The Variable Mapping menu displays the sequence of the process variables. Select *5 Variable Re-Map* to change this configuration. The 3144P single sensor input configuration screens allow selection of the primary variable (PV) and the secondary variable (SV). When the *Select PV* screen appears *Snsr 1* or *terminal temperature* must be selected.

The 3144P dual-sensor option configuration screens allow selection of the primary variable (PV), secondary variable (SV), tertiary variable (TV), and quaternary variable (QV). Variable choices are *Sensor 1*, *Sensor 2*, *Differential Temperature, Average Temperature, First-Good Temperature, Terminal Temperature, and Not Used*. The primary variable is the 4–20 mA analog signal.

3.7.2 Sensor configuration

HART 5 Fast Keys	2, 1, 1
HART 7 Fast Keys	2, 1, 1

Field communicator

Sensor configuration contains information for updating the sensor type, connections, units, and damping.

3.7.3 Change type and connections

HART 5 Fast Keys	Sensor 1: 2, 2, 1 Sensor 2: 2, 2, 2
HART 7 Fast Keys	Sensor 1: 2, 2, 1 Sensor 2: 2, 2, 2

The *Connections* command allows the user to select the sensor type and the number of sensor wires to be connected from the following list:

- 2-, 3-, or 4-wire Pt 100, Pt 200, Pt 500, Pt 1000 (platinum) RTDs (α = 0.00385 Ω/Ω/°C)
- 2-, 3-, or 4-wire Pt 100, Pt 200 (platinum) RTDs (α = 0.003916 Ω/Ω/°C)
- 2-, 3-, or 4-wire Ni 120 (nickel) RTDs
- 2-, 3-, or 4-wire Cu 10 (copper) RTDs
- IEC/NIST/DIN Type B, E, J, K, R, S, T thermocouples
- DIN type L, U thermocouples
- ASTM Type W5Re/W26Re thermocouple
- GOST Type L thermocouples

- –10 to 100 millivolts
- 2-, 3-, or 4-wire 0 to 2000 ohms

Contact an Emerson® Process Management representative for information on temperature sensors, thermowells, and accessory mounting hardware that is available through Emerson.

3.7.4 Output units

HART 5 Fast Keys	Sensor 1: 2, 2, 1, 4 Sensor 2: 2, 2, 2, 4
HART 7 Fast Keys	Sensor 1: 2, 2, 1, 5 Sensor 2: 2, 2, 2, 5

The *Snsr 1 Unit* and *Snsr 2 Unit* commands set the desired primary variable units. The transmitter output can be set to one of the following engineering units:

- Degrees Celsius
- Degrees Fahrenheit
- Degrees Rankine
- Kelvin
- Ohms
- Millivolts

3.7.5 Sensor 1 serial number

HART 5 Fast Keys	2, 2, 1, 7
HART 7 Fast Keys	2, 2, 1, 8

The serial number of the attached sensor can be listed in the *Sensor 1 S/N* variable. It is useful for identifying sensors and tracking sensor calibration information.

3.7.6 Sensor 2 serial number

HART 5 Fast Keys	2, 2, 2, 7
HART 7 Fast Keys	2, 2, 2, 8

The serial number of a second sensor can be listed in the *Sensor 2 S/N* variable.

3.7.7 2-wire RTD offset

HART 5 Fast Keys	Sensor 1: 2, 2, 1, 5 Sensor 2: 2, 2, 2, 5
HART 7 Fast Keys	Sensor 1: 2, 2, 1, 6 Sensor 2: 2, 2, 2, 6

The *2-wire Offset* command allows the measured lead wire resistance to be input, which results in the transmitter adjusting its temperature measurement to correct the error caused by this resistance. Because of a lack of lead wire compensation within the RTD, temperature measurements made with a 2-wire RTD are often inaccurate.

3.7.8 Terminal (body) temperature

HART 5 Fast Keys	2, 2, 7, 3
HART 7 Fast Keys	2, 2, 7, 3

The *Terminal Temp* command sets the temperature units to indicate the temperature at the transmitter terminals.

3.7.9 Dual-sensor configuration

HART 5 Fast Keys	2, 2, 3
HART 7 Fast Keys	2, 2, 3

Dual-sensor configuration sets the functions that can be used with a dual-sensor configured transmitter, including Differential Temperature, Average Temperature, First Good Temperature.

Differential temperature

HART 5 Fast Keys	2, 2, 3, 1
HART 7 Fast Keys	2, 2, 3, 1

Field communicator

The Rosemount 3144P configured for a dual-sensor can accept any two inputs then display the differential temperature between them. Use the following procedure with Traditional Fast Keys to configure the transmitter to measure differential temperature:

Note
This procedure reports the differential temperature as the primary variable analog signal. If this is not needed, assign differential temperature to the secondary, tertiary, or quaternary variable.

Note
The transmitter determines the differential temperature by subtracting the reading of Sensor 2 from Sensor 1 (S1 – S2). Ensure this order of subtraction is consistent with the desired reading for the application. Refer to Figure 2-3 on page 14, or inside the transmitter terminal-side cover for sensor wiring diagrams.

If using an LCD display for local indication, configure the meter to read the appropriate variables by using “LCD display options” on page 94.

Average temperature

HART 5 Fast Keys	2, 2, 3, 3
HART 7 Fast Keys	2, 2, 3, 3

Field communicator

The 3144P transmitter configured for dual-sensors can output and display the average temperature of any two inputs. Use the following procedure with Traditional Fast Keys to configure the transmitter to measure the average temperature:

Configure Sensor 1 and Sensor 2 appropriately. Select *1 Device Setup, 3 Configuration, 2 Sensor Configuration, 1 Change Type and Conn.* to set the sensor type and number of wires for Sensor 1. Repeat for Sensor 2.

Note
This procedure configures the average temperature as the primary variable analog signal. If this is not needed, assign the average temperature to the secondary, tertiary, or quaternary variable.

If using an LCD display, configure it to read the appropriate variables using "LCD display options" on page 94.

Note
If Sensor 1 and/or Sensor 2 should fail while PV is configured for average temperature and the Hot Backup™ feature is *not* enabled, the transmitter will go into alarm. For this reason, it is recommended when PV is Sensor Average, that the Hot Backup feature be enabled when dual-element sensors are used, or when two temperature measurements are taken from the same point in the process. If a sensor failure occurs when the Hot Backup feature is enabled, while PV is Sensor Average, three scenarios could result:

- If Sensor 1 fails, the average will only be reading from Sensor 2, the working sensor
- If Sensor 2 fails, the average will only be reading from Sensor 1, the working sensor
- If both sensors fail simultaneously, the transmitter will go into alarm and the status available (via HART) states that both Sensor 1 and Sensor 2 have failed

In the first two scenarios, the 4-20 mA signal is not disrupted and the status available to the control system (via HART) specifies which sensor has failed.

First good configuration

HART 5 Fast Keys	2, 2, 3, 2
HART 7 Fast Keys	2, 2, 3, 2

Field communicator

The First Good device variable is useful for applications where dual-sensors (or a single dual element sensor) are used in a single process. The first good variable will report the Sensor 1 value, unless Sensor 1 fails. When Sensor 1 fails, the Sensor 2 value will be reported as the first good variable. Once the first good variable has switched to Sensor 2, it will not revert back to Sensor 1 until a master reset occurs or "Suspend Non-PV alarms" is disabled. When the PV is mapped to first good variable and either Sensor 1 or Sensor 2 fails, the analog output will go to the alarm level, but the digital PV value read through the HART interface will still report the proper first good sensor value.

If the user does not want the transmitter to go into analog output alarm when the PV is mapped to first good and Sensor 1 fails, enable "Suspend Non-PV Alarm" mode. This combination prevents the analog output from going to the alarm level unless BOTH sensors fail.

Hot Backup feature configuration

HART 5 Fast Keys	2, 2, 4, 1, 3
HART 7 Fast Keys	2, 2, 4, 1, 3

Field communicator

The *Config Hot BU* command configures the transmitter to automatically use Sensor 2 as the primary sensor if Sensor 1 fails. With the Hot Backup feature enabled, the primary variable (PV) must either be First Good or Sensor Average. See "Average temperature" on page 43 for details on using the Hot Backup feature when PV is Sensor Average. Sensors 1 or 2 can be mapped as the secondary variable (SV), tertiary variable (TV), or quaternary variable (QV). In the event of a primary variable (Sensor 1) failure, the transmitter enters the Hot Backup feature mode and Sensor 2 becomes the PV. The 4–20 mA signal is not disrupted, and a status is available to the control system through HART that Sensor 1 has failed. An LCD display, if attached, displays the failed sensor status.

While configured to the Hot Backup feature, if Sensor 2 fails but Sensor 1 is still operating properly, the transmitter continues to report the PV 4–20 mA analog output signal, while a status is available to the control system through HART that Sensor 2 has failed. In the Hot Backup feature mode, the transmitter will not revert back to Sensor 1 to control the 4–20 mA analog output, until the Hot Backup feature mode is reset by either re-enabling through HART or by briefly powering down the transmitter.

For information on using the Hot Backup feature in conjunction with the HART Tri-Loop™ see "Use with the HART Tri-Loop" on page 99.

Problem description: The unexpected failure of a critical temperature measurement can cause safety issues, environmental or regulatory concerns, and process shutdowns.

Our solution: The Hot Backup feature allows the transmitter to automatically switch the transmitter input from the primary sensor to the secondary sensor should the primary sensor fail. This prevents a process disruption due to the failure of the primary sensor. A maintenance alert is also generated to notify operators that a sensor has failed and the Hot Backup feature is active.

How it works: Two sensors are wired to a dual-input transmitter. The 2 sensors are measured in alternating fashion, so when sensor 1 failure is detected, the transmitter can immediately switch the output to reflect the sensor 2 value. The switch is automatic with no disruption to the analog output. The transmitter sends a digital alert to inform the users that the Hot Backup feature is active and the primary sensor needs investigation.

Take away: "The Hot Backup feature prevents primary sensor failure from disrupting process control."

Target applications: Redundant measurements, critical measurements, trouble spots.

Configure Hot Backup in guided setup

Enable Hot Backup in guided setup: Fast Keys 2-1-5

1. From the Home Screen, choose **2 Configure**.

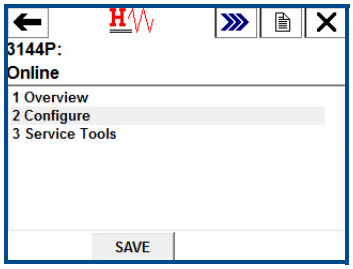

2. Choose **1 Guided Setup**.

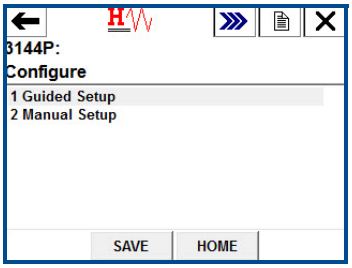

3. Choose **5 Config Hot Backup**.

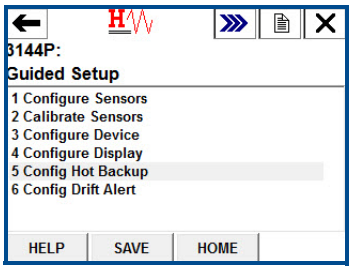

4. When prompted, choose **1 Yes** to enable Hot Backup. To exit, select **2 No**.

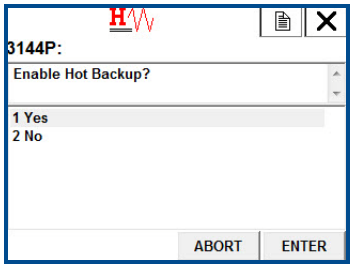

5. When prompted, choose which variable you would like as your primary variable (PV) and press **ENTER**. With Hot Backup enabled, the PV must either be *First Good Temperature* or *Average Temperature*.

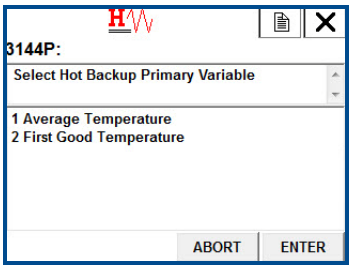

Disable Hot Backup in guided setup: Fast Keys 2-1-5

1. From the Home Screen, choose **2 Configure**.

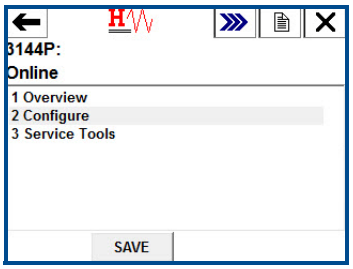

2. Choose **1 Guided Setup**.

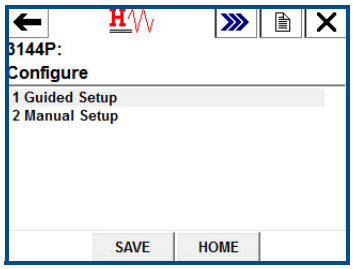

3. Choose **5 Config Hot Backup**.

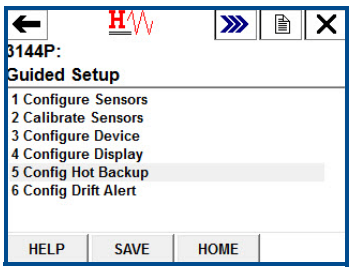

4. When prompted, choose **1 Yes** to disable Hot Backup. To reconfigure Hot Backup, choose **2 No**.

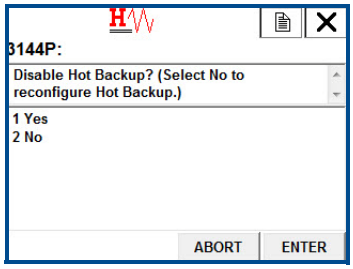

5. When prompted, choose which variable you would like as your primary variable (PV) and press **ENTER**. With Hot Backup disabled, the PV may be *Sensor 1 Temperature*, *Sensor 2 Temperature*, *Differential Temperature*, *Average Temperature*, or *First Good Temperature*.

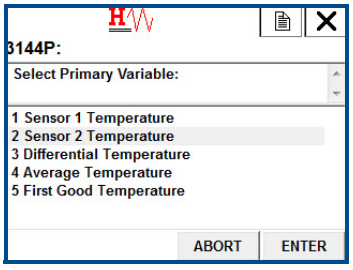

Configure Hot Backup in manual set up

Enabling Hot Backup in manual setup: Fast Keys 2-2-4-1-3

1. From the Home Screen, choose **2 Configure**.

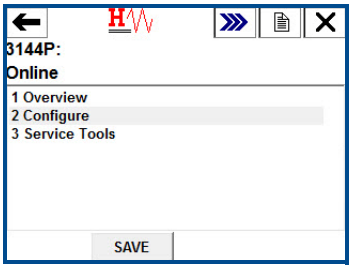

2. Choose **2 Manual Setup**.

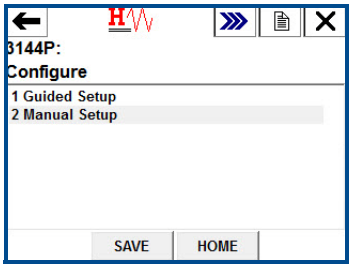

3. Choose **4 Diagnostics**.

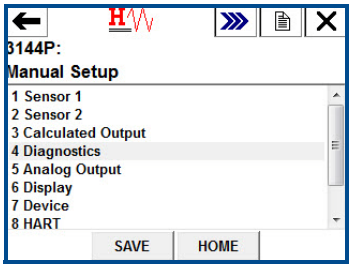

4. Choose **1 Hot Backup**.

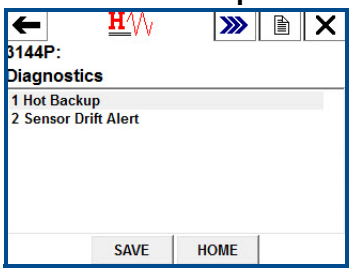

5. Select **3 Config Hot Backup**.

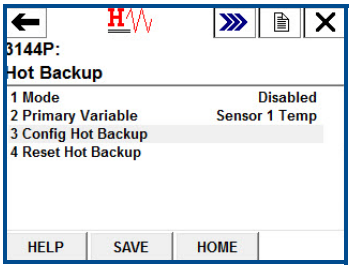

6. When prompted, choose **1 Yes** to enable Hot Backup. To exit, choose **2 No**.

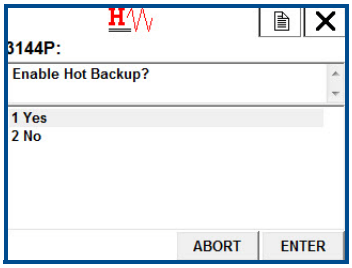

7. When prompted, choose which variable you would like as your primary variable (PV) and choose **ENTER**. With Hot Backup enabled, the PV must either be *First Good Temperature* or *Average Temperature*.

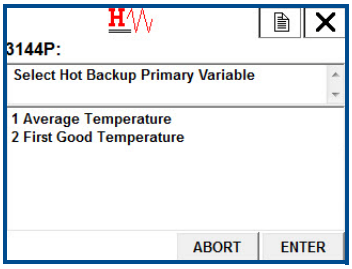

Disabling Hot Backup in manual setup: Fast Keys 2-2-4-1-3

1. From the Home Screen, choose **2 Configure**.

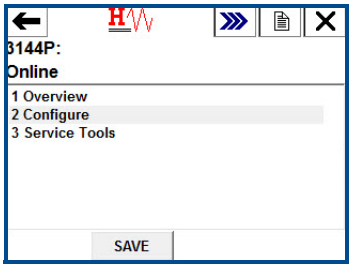

2. Choose **2 Manual Setup**.

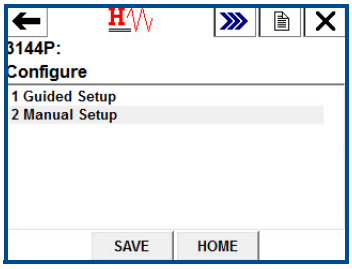

3. Choose **4 Diagnostics**.

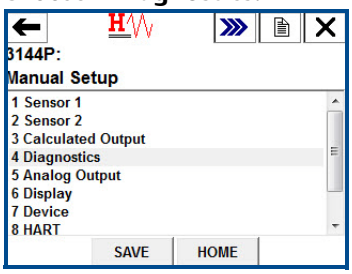

4. Choose **1 Hot Backup**.

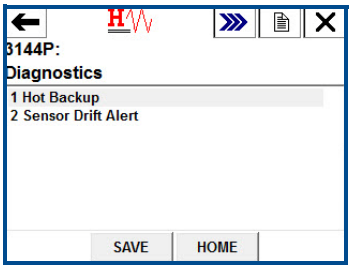

5. Choose **3 Config Hot Backup**.

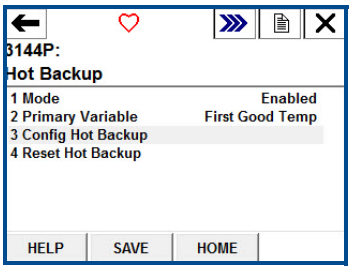

6. When prompted, choose **1 Yes** to disable Hot Backup. To reconfigure Hot Backup, choose **2 No**.

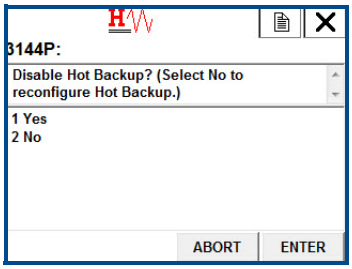

7. When prompted, choose which variable you would like as your primary variable (PV) and choose **ENTER**. With Hot Backup disabled, the PV may be *Sensor 1 Temperature*, *Sensor 2 Temperature*, *Differential Temperature*, *Average Temperature*, or *First Good Temperature*.

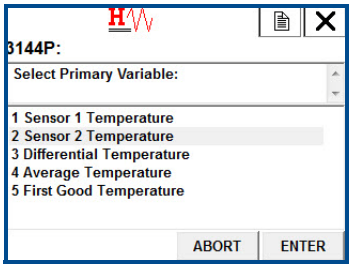

To verify that Hot Backup is enabled: Fast Keys 2-2-4-1

1. From the Home Screen, choose **2 Configure**.

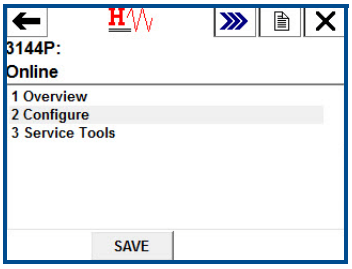

2. Choose **2 Manual Setup**.

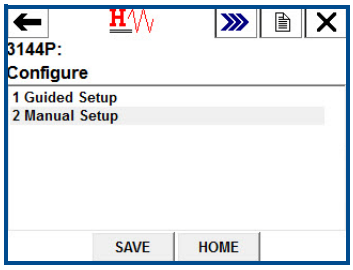

3. Choose **4 Diagnostics**.

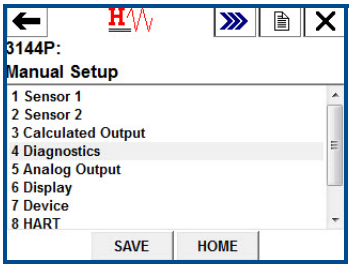

4. Choose **1 Hot Backup**.

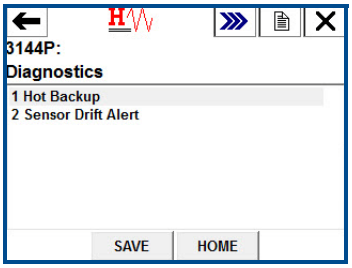

5. You will see this screen. Under *1 Mode*, it will say either *Enabled* or *Disabled*, as well as indicate what your primary variable is.

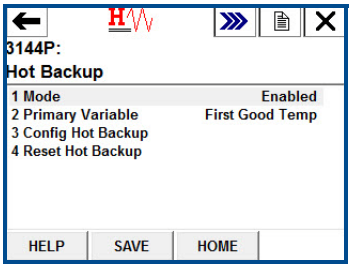

Alerts configuration for Hot Backup

Alerts for Hot Backup when configured with first good temperature

Primary sensor failure

Communicator message

If your primary sensor fails, there will be a seamless transition where your second sensor immediately takes over the process. The transmitter will report a *Failed* device status, indicating Sensor 1 is open and Hot Backup is active. This is shown in the 475 Field Communicator in the Overview section.

Choose **1 Device Status** to view the active alerts.

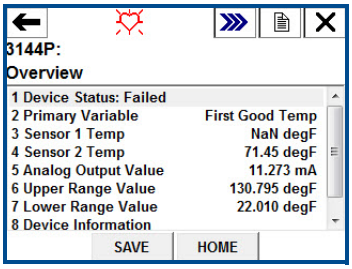

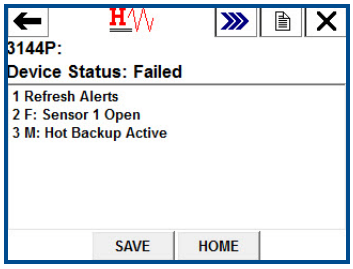

After the sensor has been repaired or replaced, the 475 Field Communicator will display a *Maintenance* Device Status, indicating Hot Backup is still active. This is shown in the 475 Field Communicator in the Overview section.

Choose **1 Device Status** to view the active alerts. Hot Backup is still active even though sensor 1 is repaired.

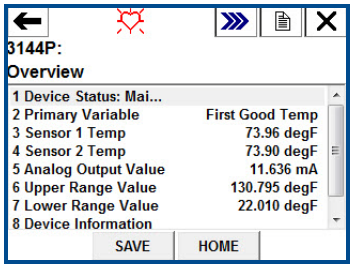

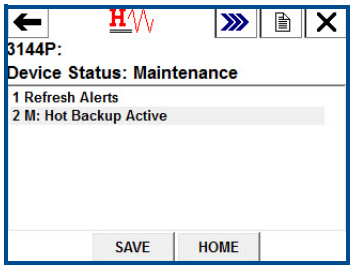

It is recommended Hot Backup be reset immediately after repairing or replacing the affected sensor. See "Reset Hot Backup: Fast Keys 2-2-4-1-4" on page 78. After resetting Hot Backup, the 475 Field Communicator will display an *Advisory* Device Status, indicating that the configuration has changed. This is shown in the *Overview* section. To clear this advisory, clear the configuration changed flag, as shown below.

1. Choose **1 Device Status** to view the active alerts.

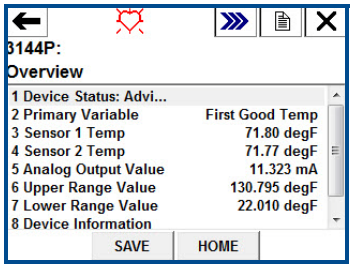

2. Choose **2 A: Configuration Changed**.

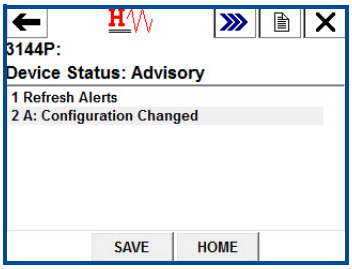

3. Choose **2 Clear Config Changed Flag**.

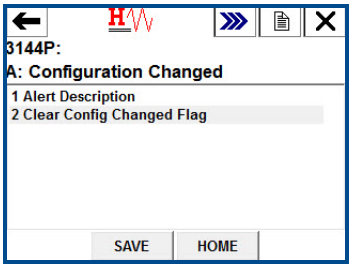

LCD display message

The LCD display on the transmitter will display a message *HOT BU SNSR 1 FAIL* as well as the output of the secondary sensor that has taken over the process.





After the sensor has been repaired or replaced, the LCD display on the transmitter will display a message *WARN HOT BU* as well as the output of the secondary sensor that has taken over the process.



It is recommended that Hot Backup be reset immediately after repairing or replacing the affected sensor. See "Reset Hot Backup: Fast Keys 2-2-4-1-4" on page 78. After repairing or replacing the bad sensor, the LCD display on the transmitter will now display the value of Sensor 1.

DeltaV® message

Alarms will show up on the bottom toolbar, as shown below:



To view the alarm, simply click on the device on the toolbar. A faceplate with further information on the active alarms will appear. It will show an *ADVISE Sensor Summary*, a *FAILED Sensor 1 Open*, and a *MAINTENANCE Hot Backup Active*.

Note
For all of these alarms to appear in DeltaV, all alarms in DeltaV must be configured to *WARNING* status.

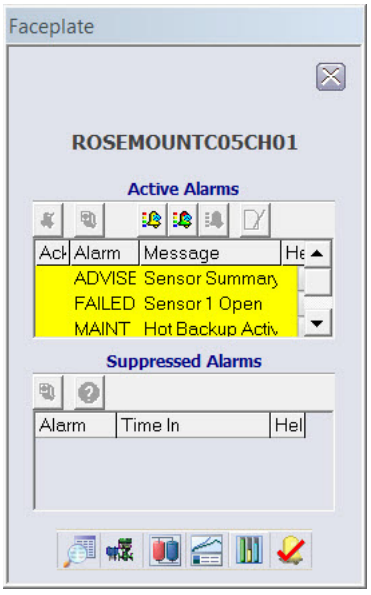

After the sensor has been repaired or replaced, the Faceplate window in DeltaV will display boxes next to each alarm that has been addressed. You must acknowledge each alarm to clear it by checking the ACK box to the left of the alarm.

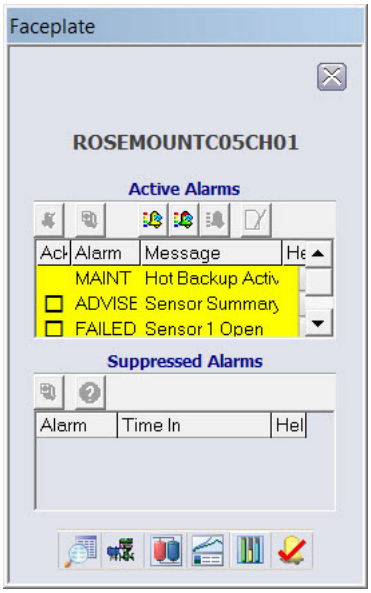

It is recommended Hot Backup be reset immediately after repairing or replacing the affected sensor. See "Reset Hot Backup: Fast Keys 2-2-4-1-4" on page 78. After resetting Hot Backup, the DeltaV Faceplate window indicates the alarms *ADVISE Configuration Change* and *MAINTENANCE Hot Backup Active*. You must acknowledge these alarms in order to clear them by checking the *ACK* boxes next to each alarm.

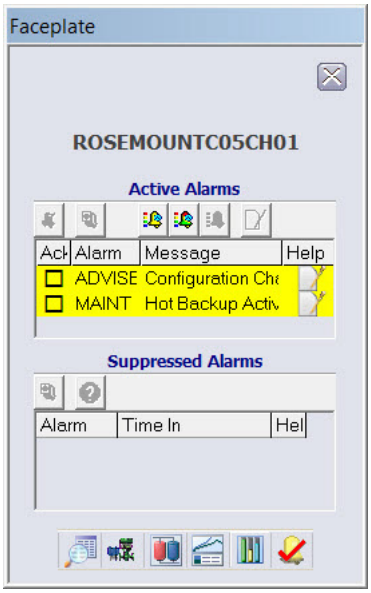

Yokogawa's Centum PRM/DTM™ messages

When the primary sensor fails, alarms will be displayed in the PRM (Plant Resource Manager) via yellow circles next to the device, as shown below. These yellow circles indicate that something in your process needs attention. To investigate this further, right click on the affected device, and choose **DTM Works...** This will open the DTM (Device Task Manager).

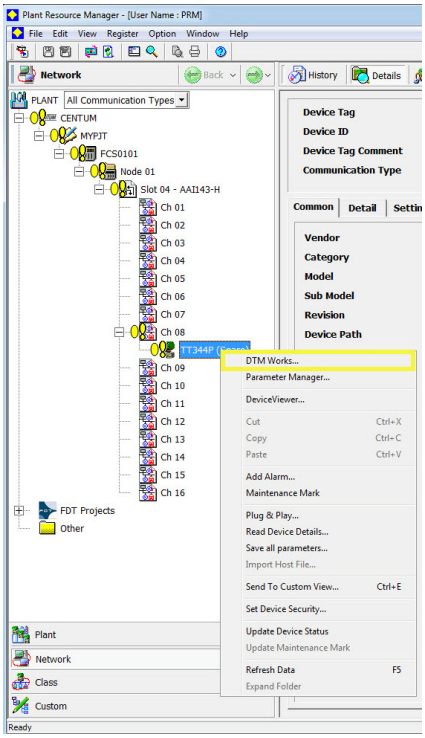

In the DTM, the device status will indicate a *Failed* status in the *Process Variable Overview* section, shown below.

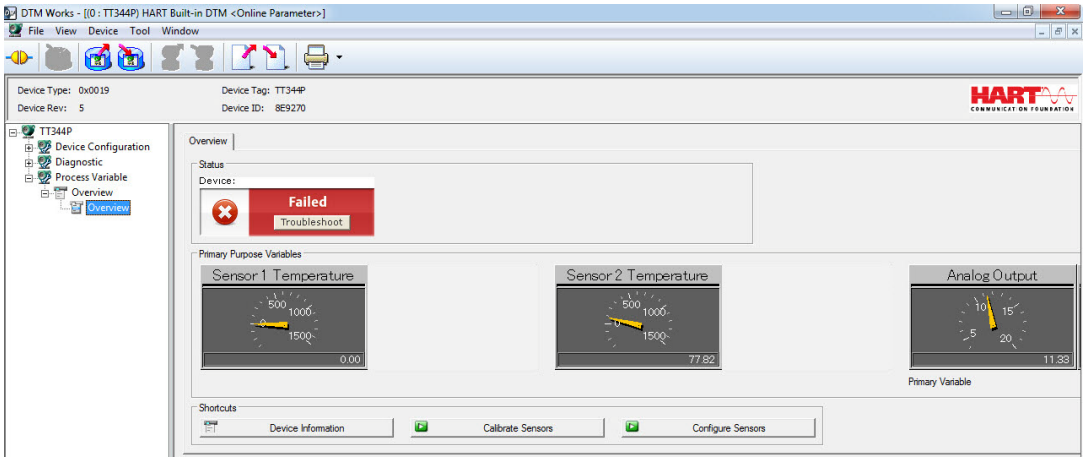

To investigate why the device displays a *Failed* status, choose **Troubleshoot** in the red device status box. Another screen will display the active alerts indicating *FAILED Sensor 1 Open*, and *MAINTENANCE Hot Backup Active*, as shown below.

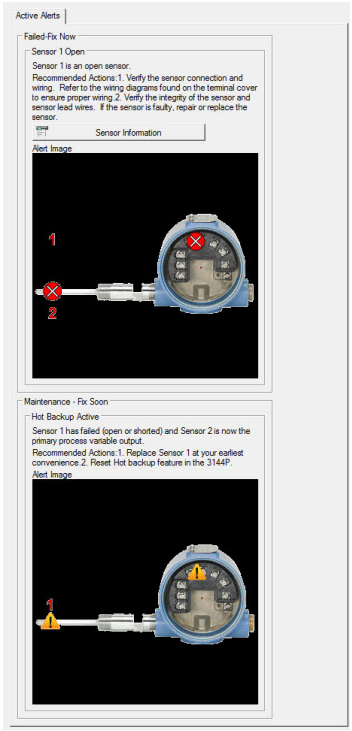

After the sensor has been repaired or replaced, the device status in the *Process Variable Overview* section of the DTM will change from *Failed* to *Maintenance*.

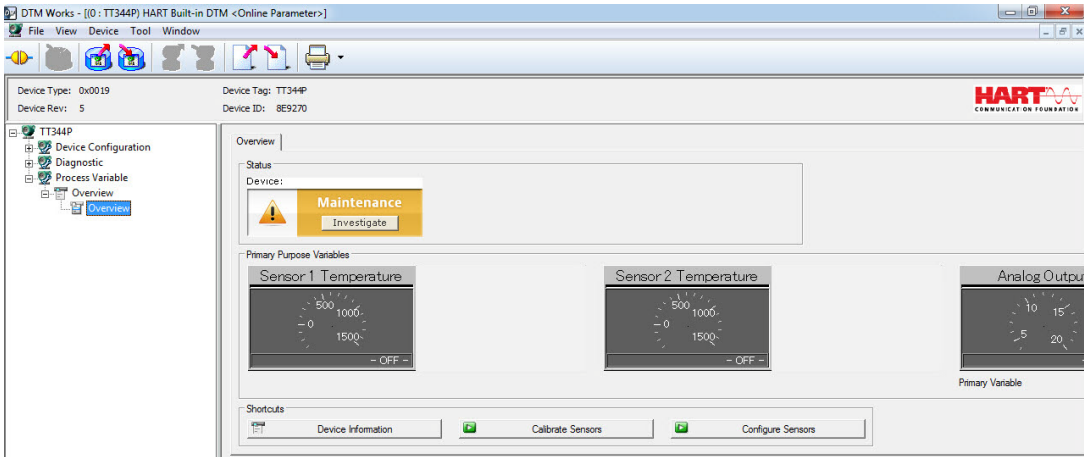

Investigate this Maintenance alert by choosing **Troubleshoot** in the yellow device status box. Another screen will display the active alerts, indicating *MAINTENANCE Hot Backup Active*, as shown below.

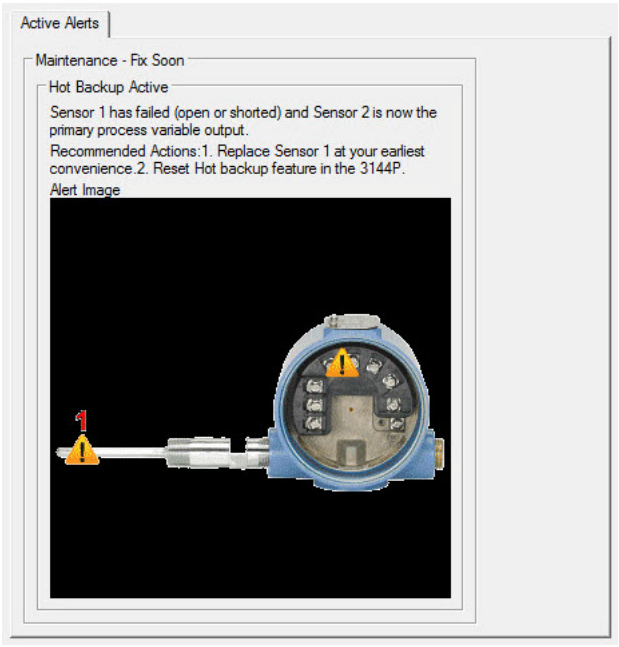

It is recommended that Hot Backup be reset immediately after repairing or replacing the affected sensor. See "Reset Hot Backup: Fast Keys 2-2-4-1-4" on page 78 with a 475 handheld communicator or reset it directly in the DTM by going to the *Diagnostics* tab of the *Manual Setup* section and choosing **Reset Hot Backup**, as shown below.

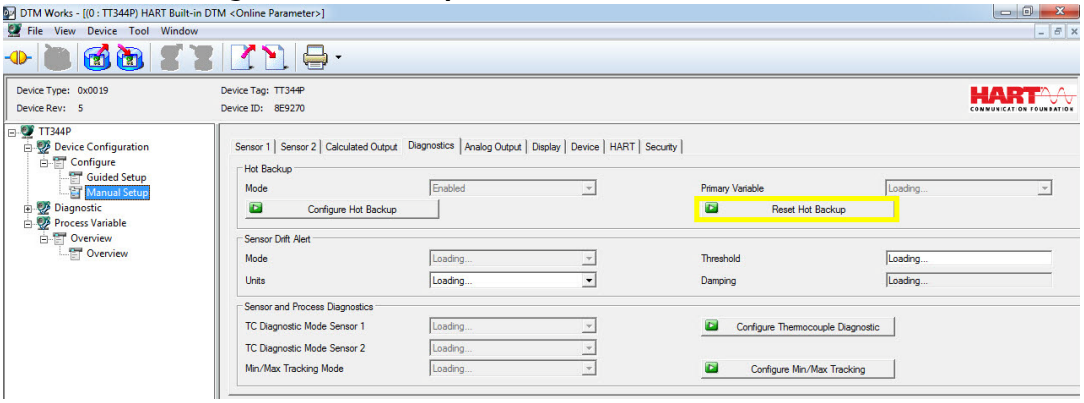

After resetting Hot Backup, the device status in the *Process Variable Overview* section of the DTM will change from *Maintenance* to *Advisory*, as shown below.

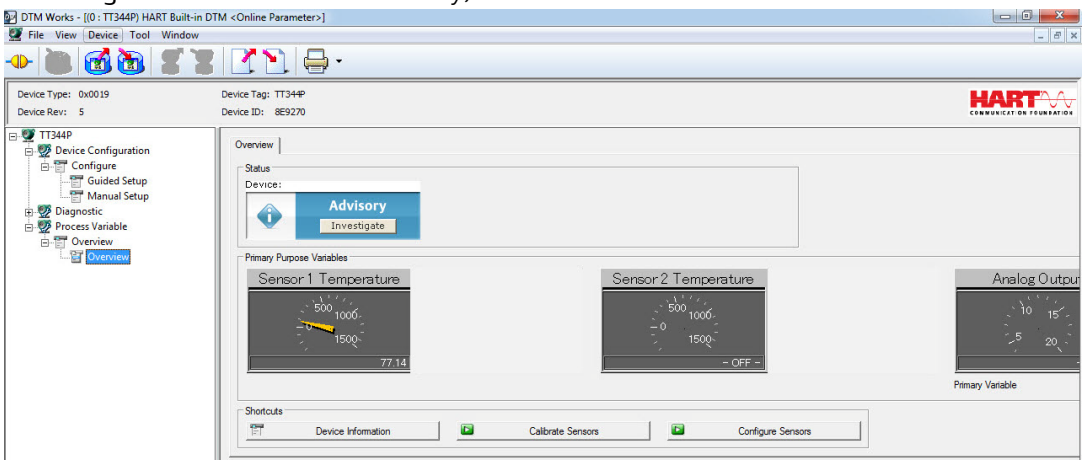

Investigate this advisory alert by clicking Investigate in the blue device status box. Another screen will display the active alerts, indicating *ADVISORY Configuration Changed*, as shown below. To clear this advisory, simply choose **Clear Config Changed Flag** and follow the steps.

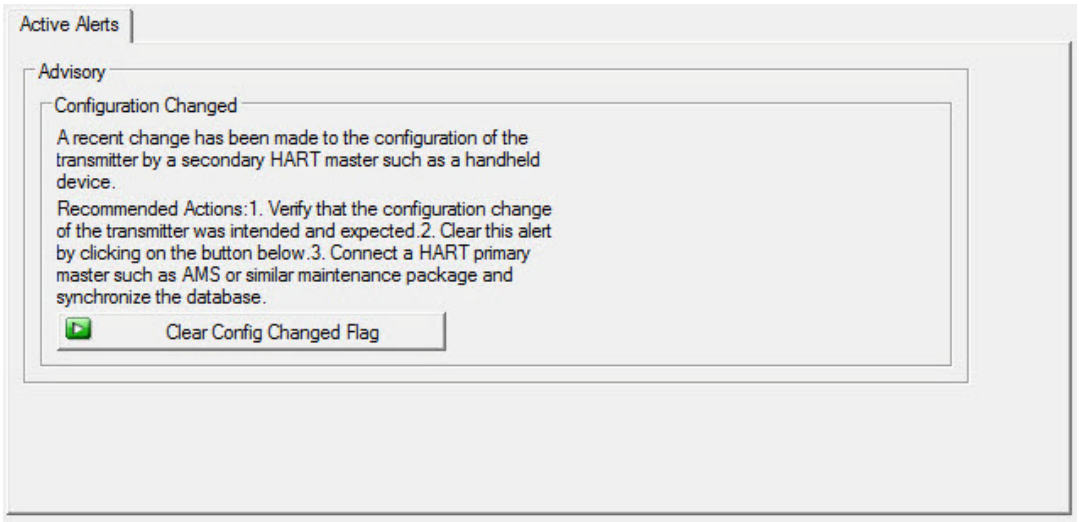

When all of the alerts for this device have been addressed, the yellow circles in the PRM change to green, indicating that everything is good.

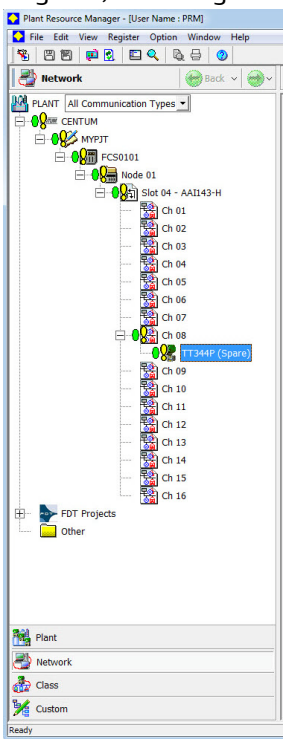

Secondary sensor failure

Communicator message

If Hot Backup is enabled and your secondary sensor fails, your transmitter will report a *Failed* device status, as shown below on the 475 Field Communicator in the *Overview* section.

Choose **1 Device Status** to view the active alerts.

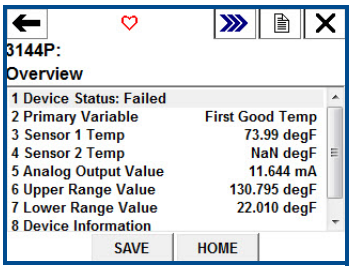

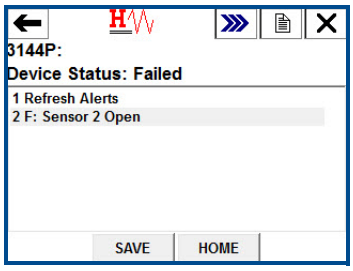

After the sensor has been repaired or replaced, the 475 Field Communicator will display a *Good* Device Status, indicating the problem is solved.

LCD display message

The LCD display on the transmitter will display a message *WARN SNSR 2 FAIL*. It will also continue to display the output of your primary sensor:





After the sensor has been repaired or replaced, the LCD display warning message will clear and display the output of the primary variable.

DeltaV message

Alarms will show up on the bottom toolbar, as shown below:



To view the alarm, simply click on the device on the toolbar. A Faceplate with further information on the active alarms will appear. It will show an *ADVISE Sensor Summary*, a *FAILED Sensor 2 Open*, and a *MAINTENANCE Hot Backup Active*.

Note
For all of these alarms to appear in DeltaV, all alarms in DeltaV must be configured to *WARNING* status.

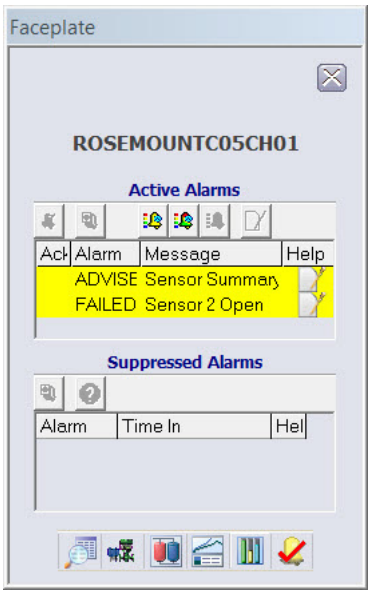

After the sensor has been repaired or replaced, the faceplate in DeltaV will display boxes next to the alarms, shown below. You must acknowledge these alarms by clicking on the boxes in order to clear them.

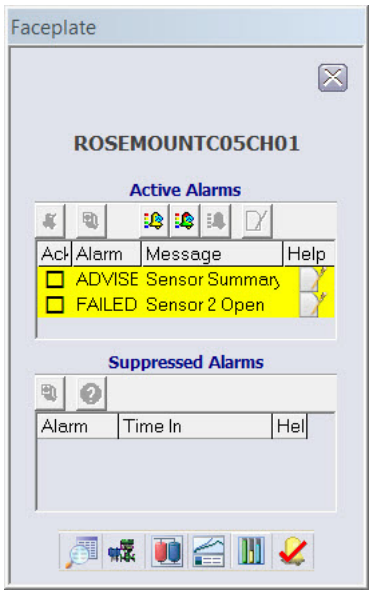

Yokogawa's Centum PRM/DTM messages

When the secondary sensor fails, alarms will be displayed in the PRM (Plant Resource Manager) via yellow circles next to the device, as shown below. These yellow circles indicate that something in your process needs attention. To investigate this further, right click on the affected device, and choose **DTM Works...** This will open the DTM (Device Task Manager).

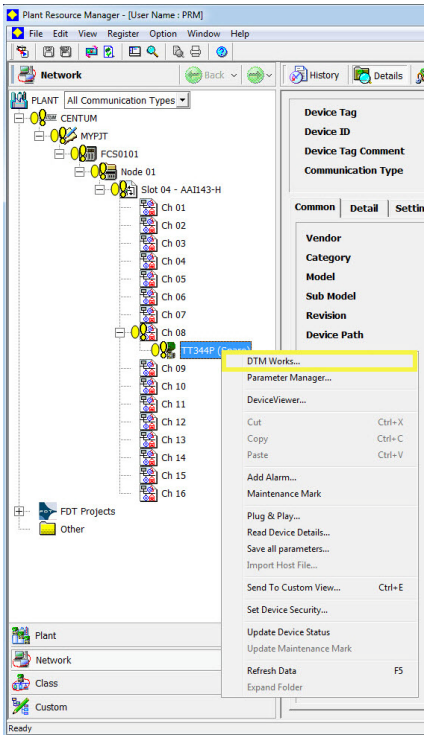

In the DTM, the device status will indicate a *Failed* status in the *Process Variable Overview* section, shown below.

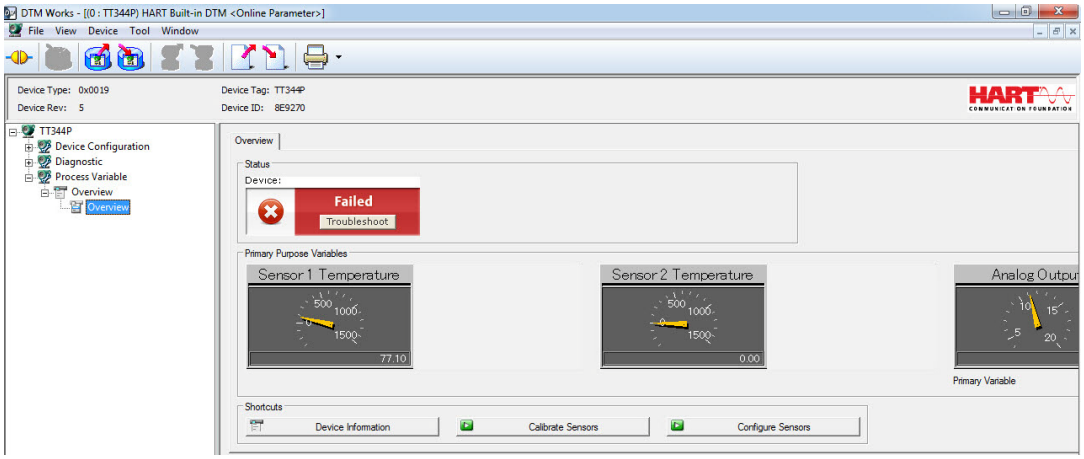

To investigate why the device displays a *Failed* status, choose **Troubleshoot** in the red device status box. Another screen will display the active alerts indicating *FAILED Sensor 2 Open*, as shown below.

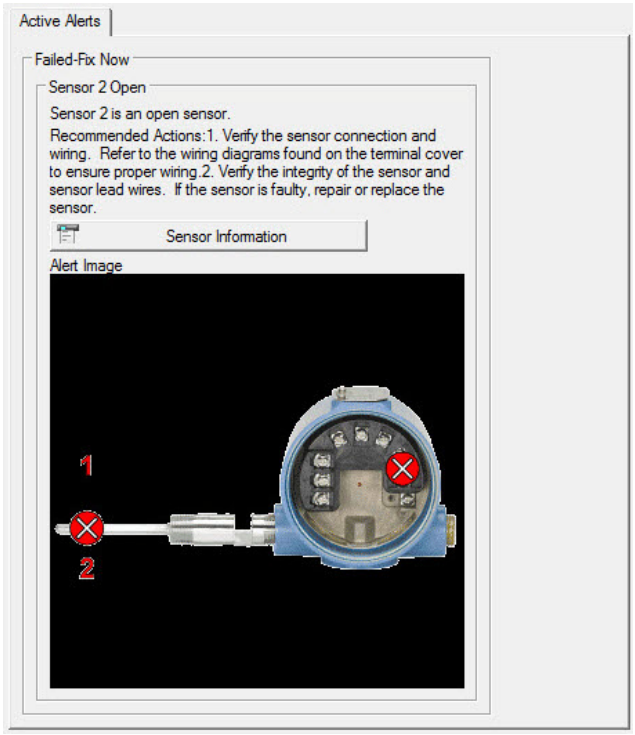

After the sensor has been repaired or replaced, the alerts will clear, and the yellow circles in the PRM change to green, indicating that everything is good. Hot Backup does not need to be reset in this case.

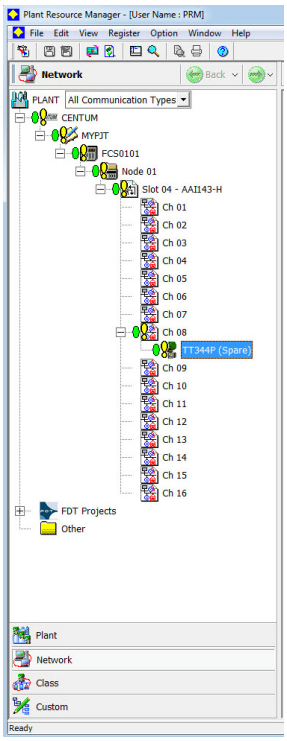

Alerts for Hot Backup when configured with average temperature

Primary sensor failure

Communicator message

If your primary sensor fails, there will be a seamless transition where the second sensor immediately takes over the process. The transmitter will report a *failed* status, indicating Sensor 1 is open and Hot Backup is active. This alert is shown on the 475 Field Communicator in the *Overview* section.

Choose **1 Device Status** to view the active alerts.

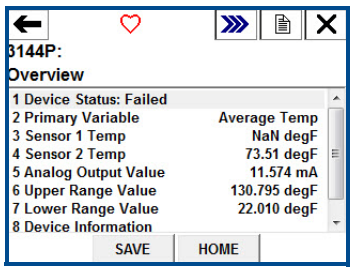

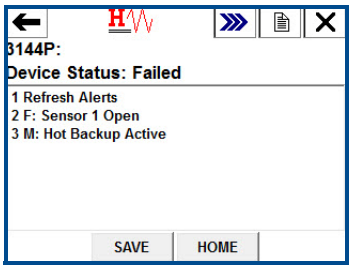

After the sensor has been repaired or replaced, the 475 Field Communicator will display a *Maintenance* Device Status, indicating Hot Backup is still active. This is shown on the 475 Field Communicator in the Overview section.

Hot Backup is still active even though sensor 1 is repaired. Hot Backup is still active even though sensor 1 is repaired.

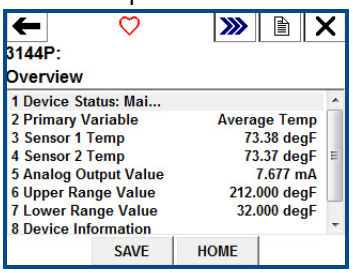

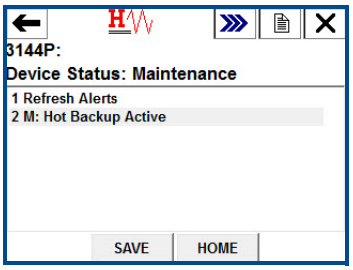

It is recommended that Hot Backup be reset immediately after repairing or replacing the affected sensor. See"Reset Hot Backup: Fast Keys 2-2-4-1-4" on page 78. After resetting Hot Backup, the 475 Field Communicator will display an *Advisory* Device Status, indicating that the configuration has changed. This is shown in the Overview section. To clear this advisory, simply clear the configuration changed flag, as shown below.

1. Choose **1 Device Status** to view the active alerts.

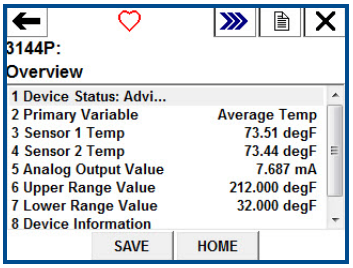

2. Choose **2 A: Configuration Changed.**

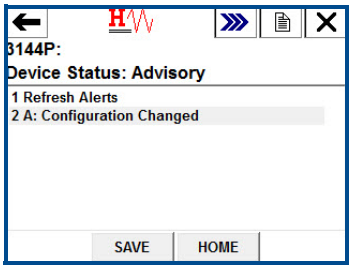

3. Choose **2 Clear Config Changed Flag**.

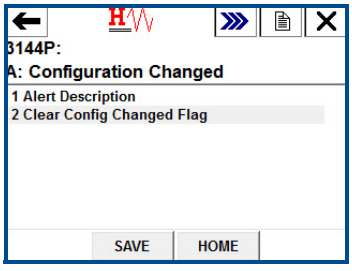

LCD display message

The LCD display on the transmitter will display a message *HOT BU SNSR 1 FAIL; WARN AV DEGRA* as well as the output of the average temperature. Because Sensor 1 has failed, this average temperature output is the value of Sensor 2 only.









After the sensor has been repaired or replaced, the LCD display on the transmitter will display a message *WARN HOT BU*, reminding you that Hot Backup is still active, as well as the normal output of the average temperature. The warning message will clear after you have reset Hot Backup. It is recommended that Hot Backup be reset immediately after repairing or replacing the damaged sensor. See "Reset Hot Backup: Fast Keys 2-2-4-1-4" on page 78.



DeltaV message

Alarms will show up on the bottom toolbar, as shown below:



To view the alarm, simply click on the device on the toolbar. A faceplate with further information on the active alarms will appear. It will show an *ADVISE Sensor Summary*, a *FAILED Sensor 1 Open*, and a *MAINTENANCE Hot Backup Active*.

Note
For all of these alarms to appear in DeltaV, all alarms in DeltaV must be configured to *WARNING* status.

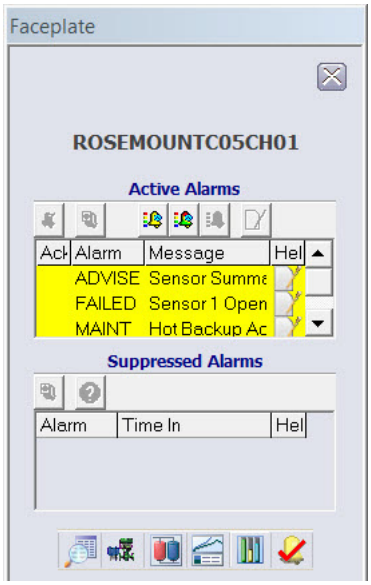

After the sensor has been repaired or replaced, the faceplate window in DeltaV will display boxes next to each alarm that has been addressed. You must acknowledge each alarm to clear it by checking the *ACK* box to the left of the alarm.

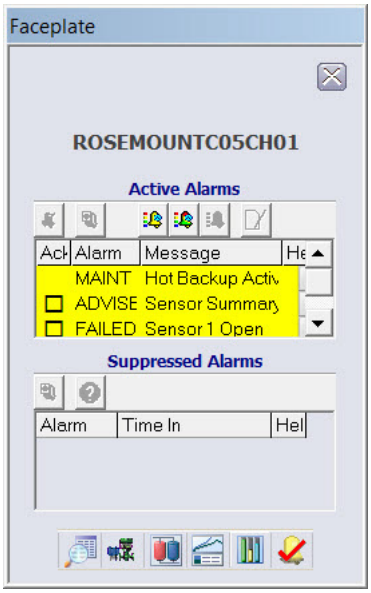

It is recommended that Hot Backup be reset immediately after repairing or replacing the affected sensor. See "Reset Hot Backup: Fast Keys 2-2-4-1-4" on page 78. After resetting Hot Backup, the DeltaV Faceplate window indicates the alarms *ADVISE Configuration Change* and

MAINTENANCE Hot Backup Active. You must acknowledge these alarms in order to clear them by checking the *ACK* boxes next to each alarm.

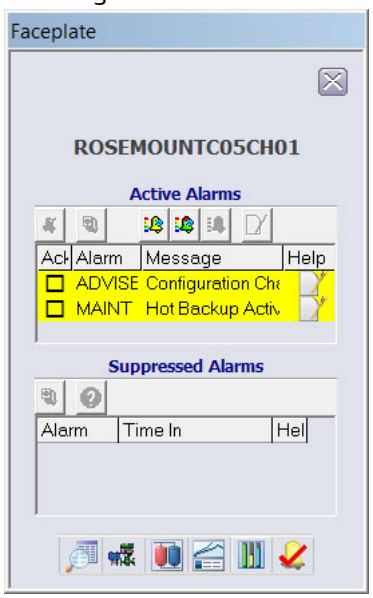

Yokogawa's Centum PRM/DTM messages

When the primary sensor fails, alarms will be displayed in the PRM (Plant Resource Manager) via yellow circles next to the device, as shown below. These yellow circles indicate that something in your process needs attention. To investigate this further, right click on the affected device, and choose **DTM Works...** This will open the DTM (Device Task Manager).

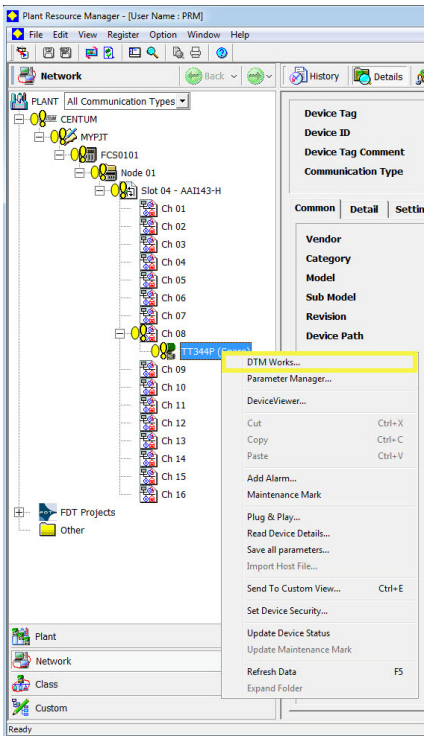

In the DTM, the device status will indicate a *Failed* status in the *Process Variable Overview* section, shown below.

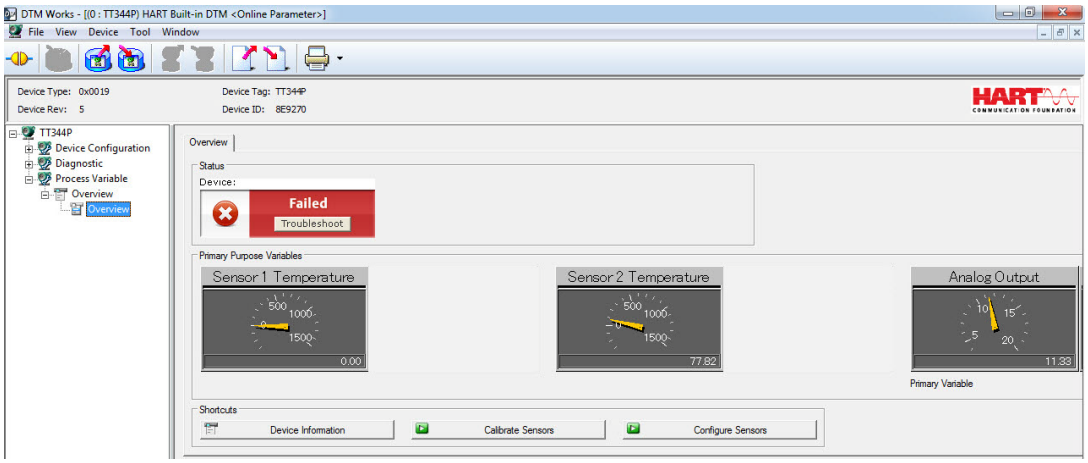

To investigate why the device displays a *Failed* status, choose **Troubleshoot** in the red device status box. Another screen will display the active alerts indicating *FAILED Sensor 1 Open*, and *MAINTENANCE Hot Backup Active*, as shown below.

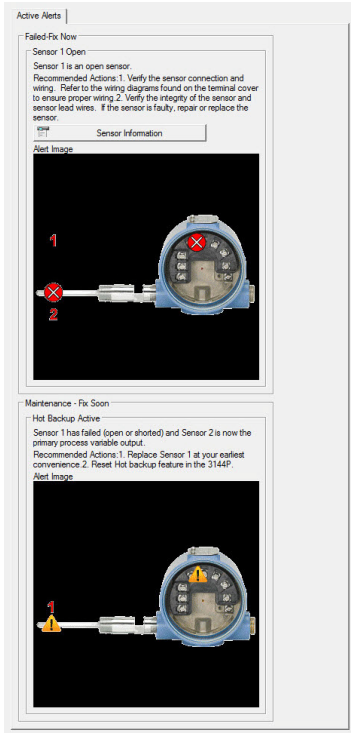

After the sensor has been repaired or replaced, the device status in the Process Variable Overview section of the DTM will change from *Failed* to *Maintenance*.

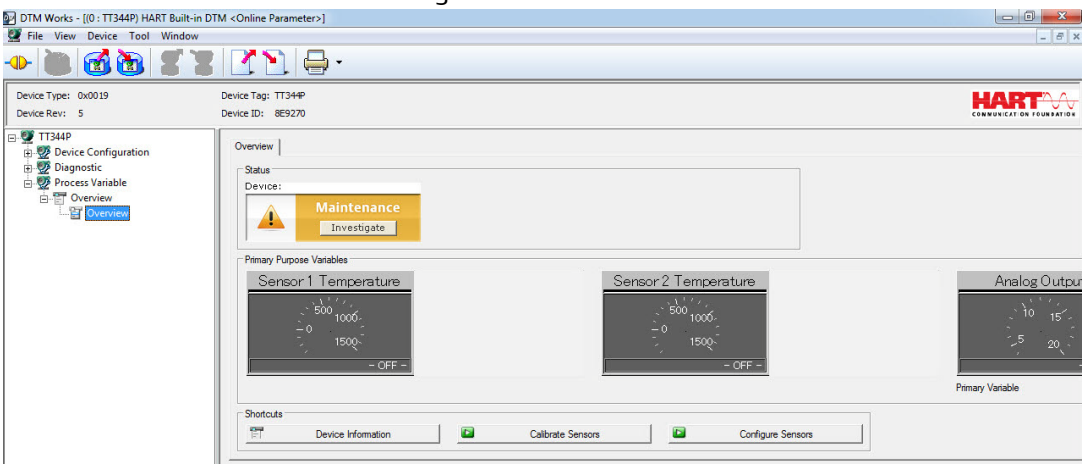

Investigate this Maintenance alert by choosing **Troubleshoot** in the yellow device status box. Another screen will display the active alerts, indicating *MAINTENANCE Hot Backup Active*, as shown below.

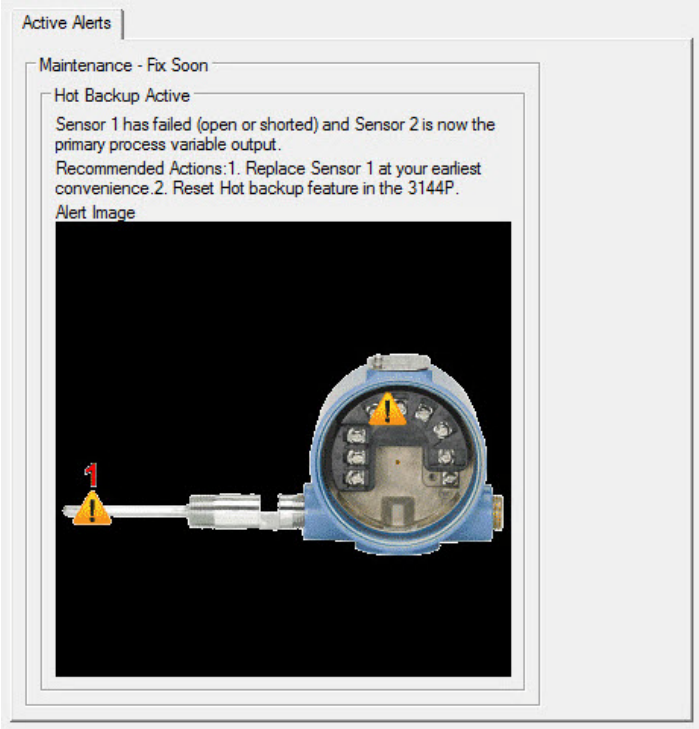

It is recommended that Hot Backup be reset immediately after repairing or replacing the affected sensor. See "Reset Hot Backup: Fast Keys 2-2-4-1-4" on page 78 with a 475 handheld communicator or reset it directly in the DTM by going to the *Diagnostics* tab of the *Manual Setup* section and choosing **Reset Hot Backup**, as shown below.

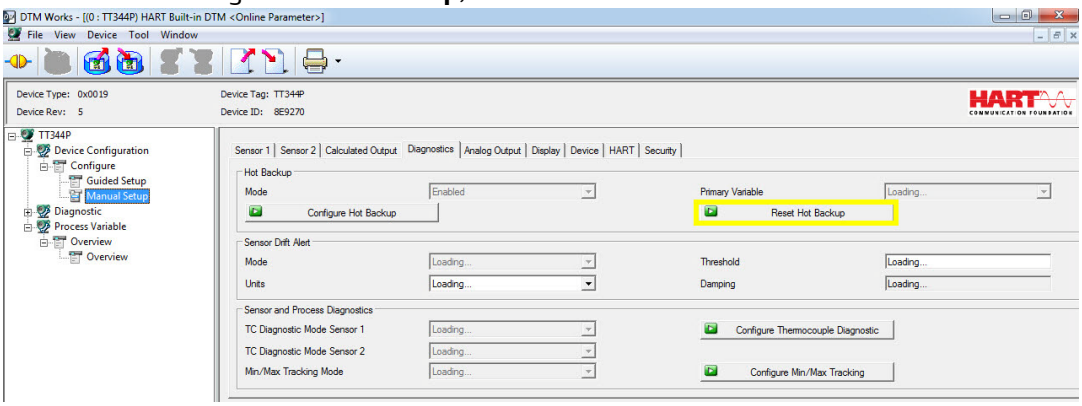

After resetting Hot Backup, the device status in the Process Variable Overview section of the DTM will change from Maintenance to Advisory, as shown below.

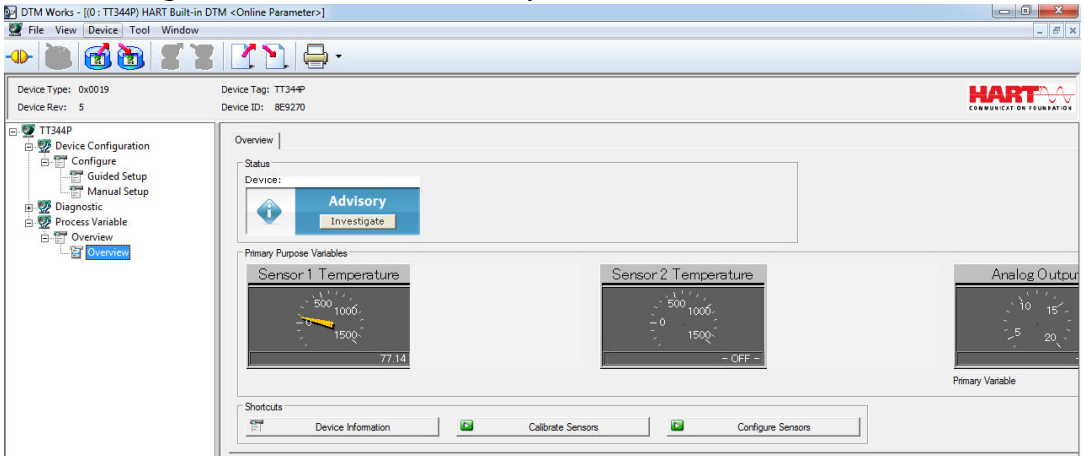

Investigate this advisory alert by choosing **Investigate** in the blue device status box. Another screen will display the active alerts, indicating *ADVISORY Configuration Changed*, as shown below. To clear this advisory, simply choose **Clear Config Changed Flag** and follow the steps.

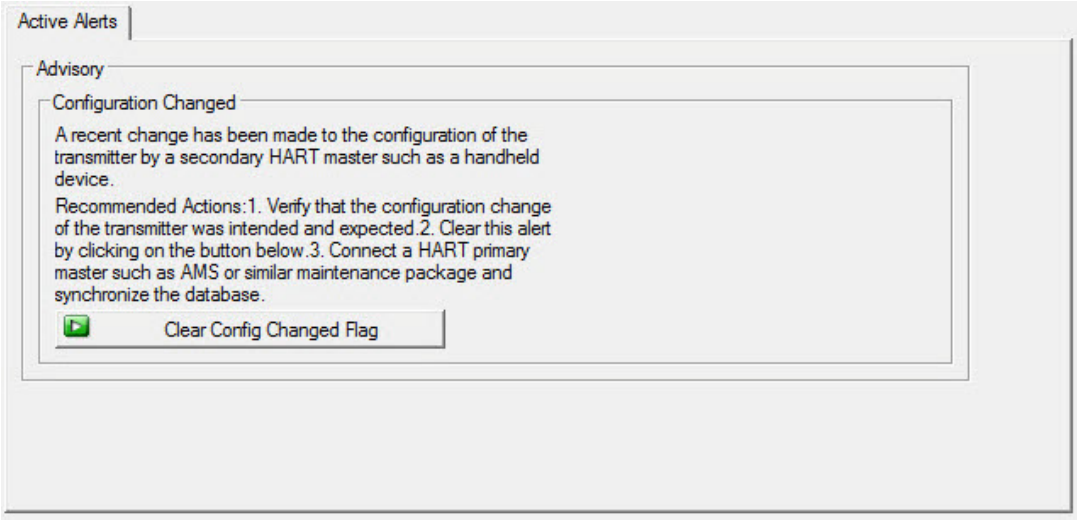

When all of the alerts for this device have been addressed, the yellow circles in the PRM change to green, indicating that everything is good.

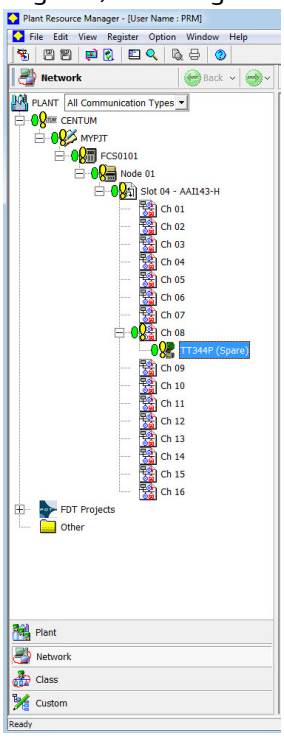

Secondary sensor failure

Communicator message

If Hot Backup is enabled and your secondary sensor fails, your transmitter will report a *Failed* device status. The alerts show that Sensor 2 is open, but Hot Backup is not active, as shown below on the 475 Field Communicator in the *Overview* section:

Choose **1 Device Status** to view the active alerts.

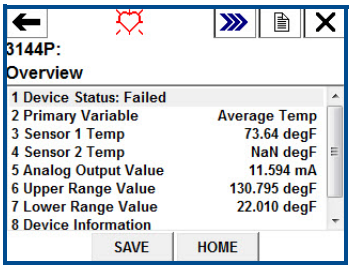

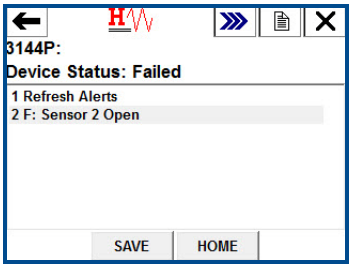

After the sensor has been repaired or replaced, the 475 Field Communicator will display a *Good* Device Status, indicating the problem is solved.

LCD display message

The LCD display on the transmitter will display a message *WARN SNSR 2 FAIL; WARN AV DEGRA* as well as the output of the average temperature. Because Sensor 2 has failed, this average temperature output is the value of Sensor 1 only.



After the sensor has been repaired or replaced, the LCD display warning message will clear and display the output of the primary variable.

DeltaV message

Alarms will show up on the bottom toolbar, as shown below:



To view the alarm, simply click on the device on the toolbar. A faceplate with further information on the active alarms will appear. It will show an *ADVISE Sensor Summary*, and a *FAILED Sensor 2 Open*.

Note
For all of these alarms to appear in DeltaV, all alarms in DeltaV must be configured to *WARNING* status.

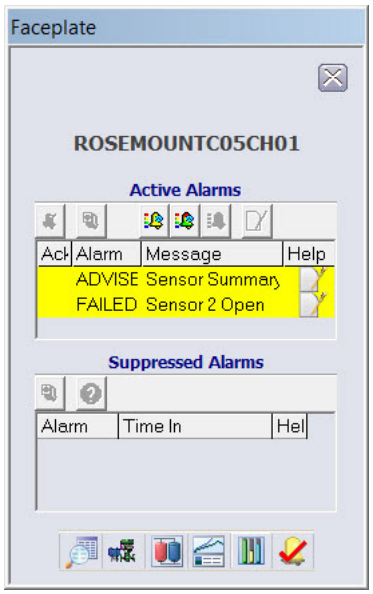

After the sensor has been repaired or replaced, the faceplate in DeltaV will display boxes next to the alarms, shown below. You must acknowledge these alarms by clicking on the boxes in order to clear them.

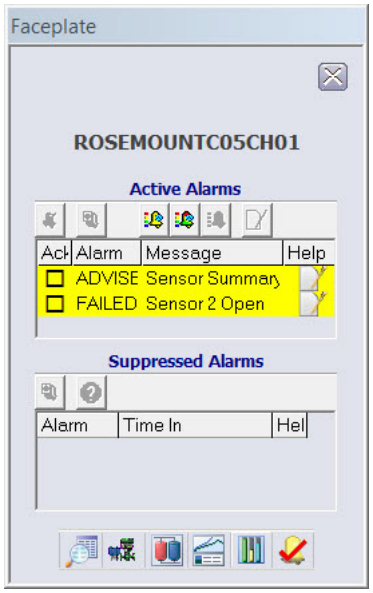

Yokogawa's Centum PRM/DTM messages

When the secondary sensor fails, alarms will be displayed in the PRM (Plant Resource Manager) via yellow circles next to the device, as shown below. These yellow circles indicate that something in your process needs attention. To investigate this further, right click on the affected device, and choose **DTM Works...** This will open the DTM (Device Task Manager).

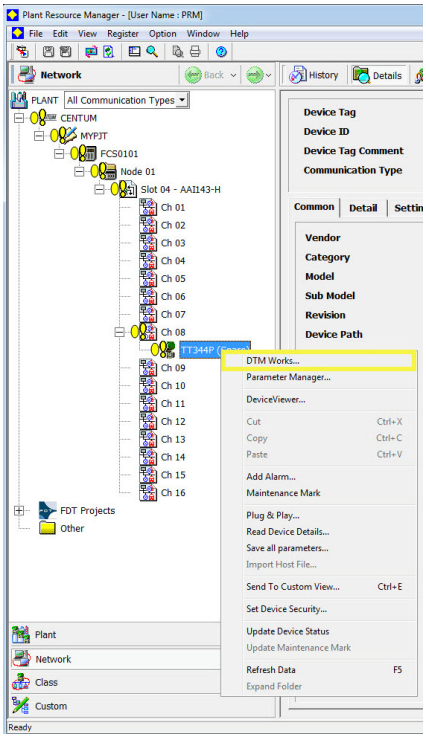

In the DTM, the device status will indicate a *Failed* status in the *Process Variable Overview* section, shown below.

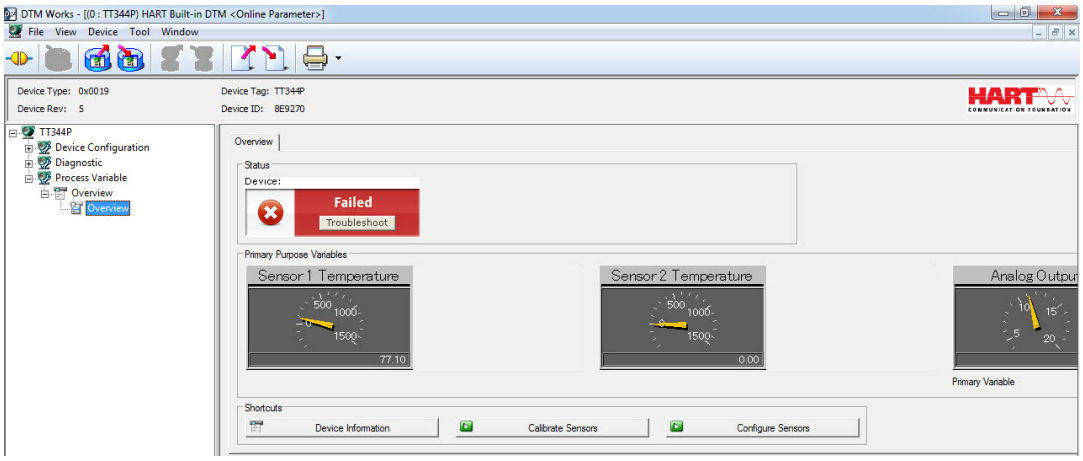

To investigate why the device displays a *Failed* status, choose **Troubleshoot** in the red device status box. Another screen will display the active alerts indicating *FAILED Sensor 2 Open*, as shown below.

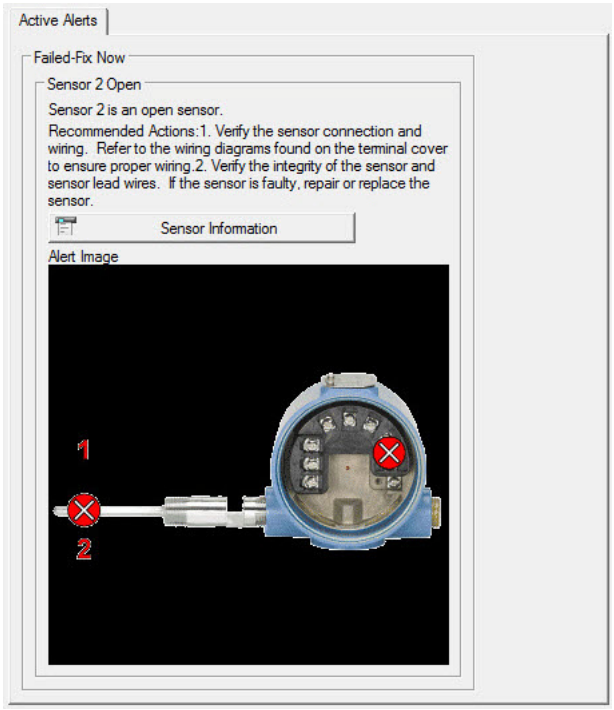

After the sensor has been repaired or replaced, the alerts will clear, and the yellow circles in the PRM change to green, indicating that everything is good. Hot Backup does not need to be reset in this case.

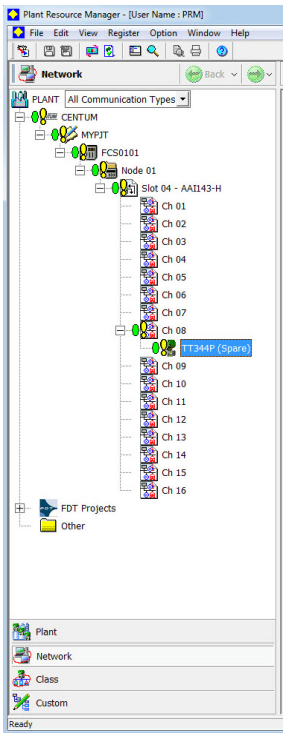

Reset Hot Backup: Fast Keys 2-2-4-1-4

When the Primary Variable is set to First Good Temperature, the secondary sensor will remain on the 4-20 mA output until Hot Backup is reset, even after Sensor 1 has been replaced. Because of this, it is recommended to reset Hot Backup immediately after Sensor 1 is replaced. If Hot Backup is not reset and Sensor 2 fails, the transmitter will go into alarm. It will not transfer back to Sensor 1 even if sensor one has been repaired.

When the Primary Variable is set to Average Temperature, it is also recommended to reset Hot Backup immediately after Sensor 1 is replaced in order to clear the Hot Backup Active alarm. However, with the PV set to Average Temperature, if Hot Backup is not reset and Sensor 2 fails, the transmitter will simply switch to output the average of only Sensor 1.

Steps to reset Hot Backup are shown below.

1. From the Home Screen, choose **2 Configure**.

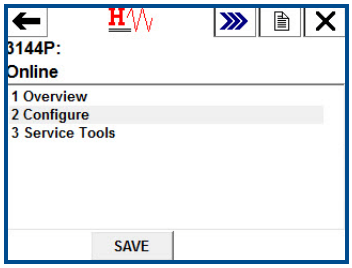

2. Choose **2 Manual Setup**.

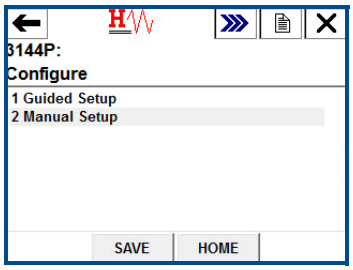

3. Choose **4 Diagnostics**.

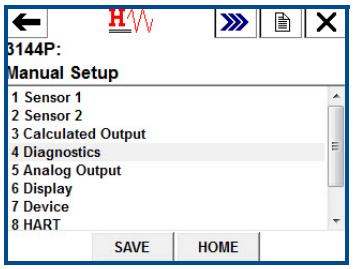

4. Choose **1 Hot Backup**.

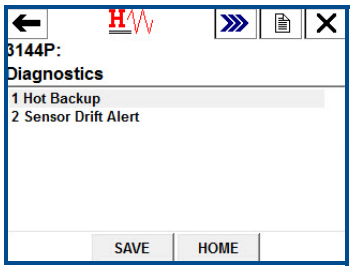

5. Choose **4 Reset Hot Backup**.

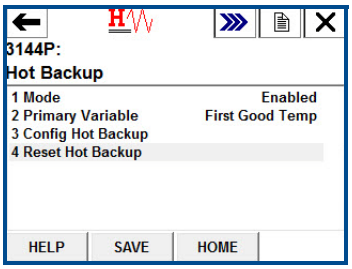

6. Hot Backup has been reset. Choose **OK**.

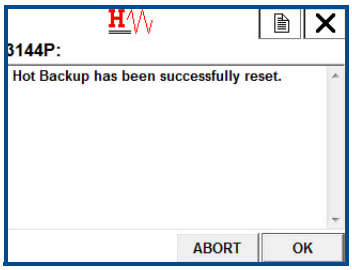

Sensor drift alert configuration

HART 5 Fast Keys	2, 2, 4, 2
HART 7 Fast Keys	2, 2, 4, 2

Field communicator

The Sensor Drift Alert command allows the transmitter to set a warning flag (through HART), or go into analog alarm when the temperature difference between Sensor 1 and Sensor 2 exceeds a user-defined limit. This feature is useful when measuring the same process temperature with two sensors, ideally when using a dual-element sensor. When Sensor Drift Alert mode is enabled, the user sets the maximum allowable difference, in engineering units, between Sensor 1 and Sensor 2. If this maximum difference is exceeded, a Sensor Drift Alert warning flag will be set.

When configuring the transmitter for Sensor Drift Alert, the user also has the option of specifying that the analog output of the transmitter go into alarm when sensor drifting is detected.

Note
Using dual sensor configuration in the 3144P, the temperature transmitter supports the configuration and simultaneous use of the Hot Backup® feature and Sensor Drift Alert. If one sensor fails, the transmitter switches output to use the remaining good sensor. Should the difference between the two sensor readings exceed the configured threshold, the AO will go to alarm indicating the sensor drift condition. The combination of Sensor Drift Alert and the Hot Backup® feature improves sensor diagnostic coverage while maintaining a high level of availability. Refer to the 3144P FMEDA report for the impact on safety.

Problem description: Sensors often drift before they fail. This causes issues because during the drift period, the sensor is not reporting as accurate measurement. In control loops, and especially safety loops this can lead to improper process control and potential safety hazards.

Our solution: The Sensor Drift Alert continuously monitors two sensor readings to detect a drifting sensor. The diagnostic monitors the difference between the two sensors, and when the difference becomes greater than a value entered by the user, the transmitter sends an alert to indicate a sensor drift condition.

How it works: Two sensors are connected to a dual-input transmitter where the difference in sensor readings is continuously being measured. A threshold is set by the user to determine when an excessive drift (i.e. a significant delta) occurs between the two sensors. The temperature delta between the two sensors is calculated by taking the absolute value of the difference between sensor 1 and sensor 2. The user configures the transmitter to send a digital alert or analog alarm when the alert has been triggered. The Sensor Drift Alert does not indicate which sensor is failing. Rather the diagnostic provides an indication of a sensor drifting. The user should view the individual sensor output trends on the host to determine which sensor is drifting.

Take away: “Sensor Drift Alert detects a degrading sensor.”

Target applications: Redundant measurements, critical measurements, severe applications.

Note
Enabling Drift Alert Option Warning only will set a flag (through HART) whenever the maximum acceptable difference between Sensor 1 and Sensor 2 has been exceeded. For the transmitter's analog signal to go into alarm when Drift Alert is detected, select Alarm in Alarm switch (HART) .

Configure Sensor Drift in guided setup

Enable Sensor Drift Alert in guided setup: Fast Keys 2-1-6

1. From the Home Screen, select **2 Configure**.

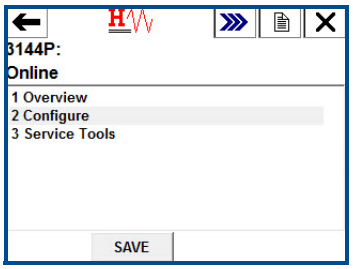

2. Select **1 Guided Setup.**

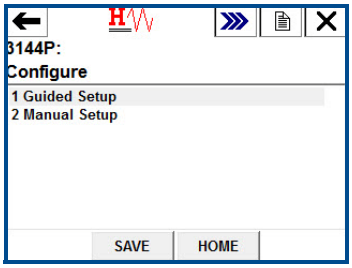

3. Select **6 Config Drift Alert.**

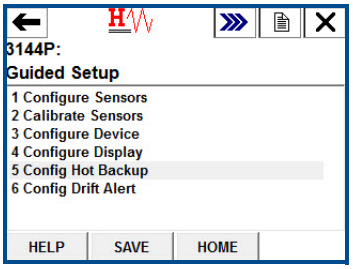

4. Select **1 Enable** to activate Sensor Drift Alert and press **ENTER**.

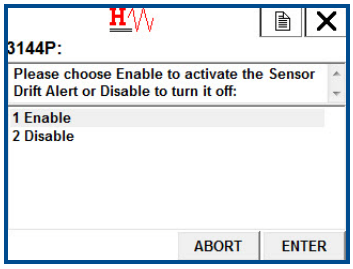

5. When prompted, select whether you want Sensor Drift Alert to put the transmitter into "Alarm" or "Warning", and press **ENTER**. Enabling Drift Alert Option Warning only will set a flag (through HART) whenever the maximum acceptable difference between Sensor 1 and Sensor 2 has been exceeded. Enabling Drift Alert Option Alarm will send the transmitter's analog signal into alarm when Drift Alert is detected.

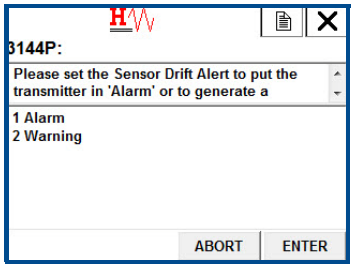

6. Select the engineering units you would like to use and press **ENTER**. Choose from degC, degF, degR, Kelvin, mV, Ohms.

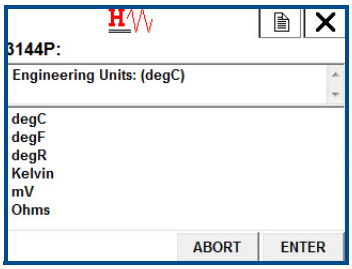

7. Enter the Sensor Drift Alert threshold value and press **ENTER**. This is a digital value that triggers the Drift Alert feature. When this limit is exceeded, the transmitter will go into alarm or generate a warning (depending on the alert mode chosen previously).

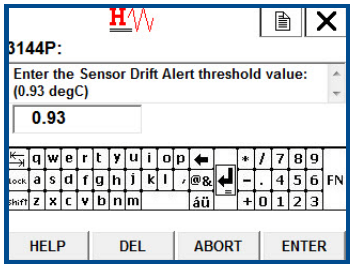

8. Enter a damping value between 0 and 32 and press **ENTER**. This damping value is additional damping applied to the result of (S1-S2) after each sensor's individual damping value has already been applied.

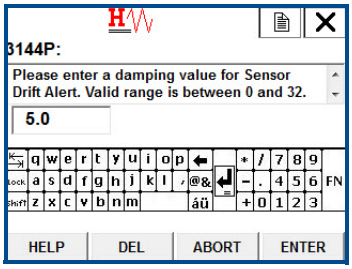

9. Configuration is complete. Press **OK**.

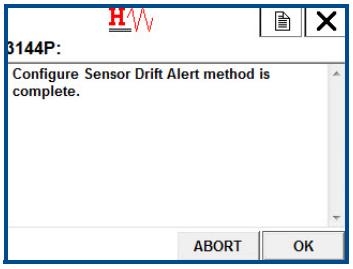

Disable Sensor Drift Alert in guided setup: Fast Keys 2-1-6

1. From the Home Screen, select **2 Configure**.

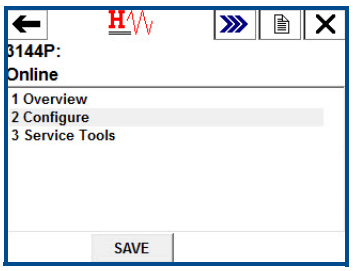

2. Select **1 Guided Setup.**

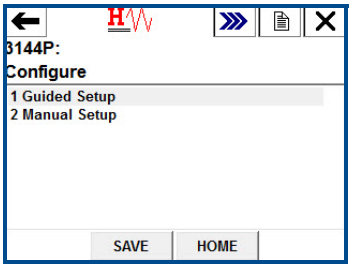

3. Select **6 Config Drift Alert.**

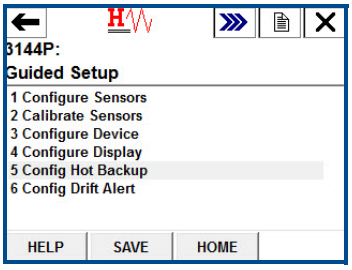

4. Select **2 Disable** to disable Sensor Drift alert and press **ENTER.**

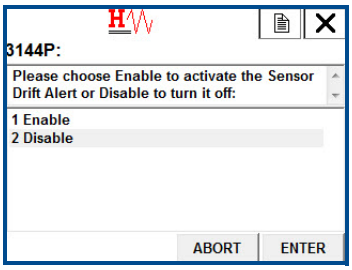

5. Sensor Drift Alert has been disabled. Press **OK**.



Configure Sensor Drift in manual setup

Enable Sensor Drift Alert in manual setup: Fast Keys 2-2-4-2-5

1. From the Home Screen, select **2 Configure**.

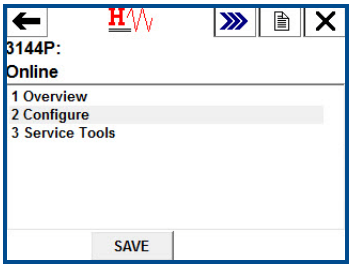

2. Select **2 Manual Setup**.

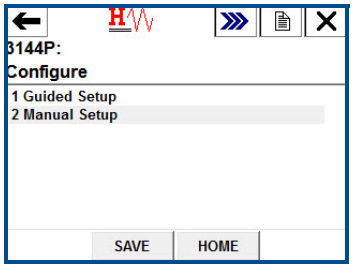

3. Select **4 Diagnostics**.

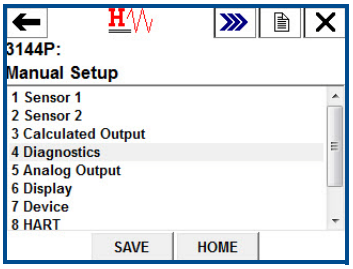

4. Select **2 Sensor Drift Alert**.

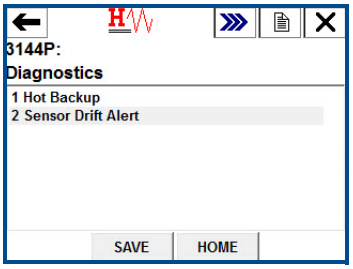

5. Select **5 Config Drift Alert**.

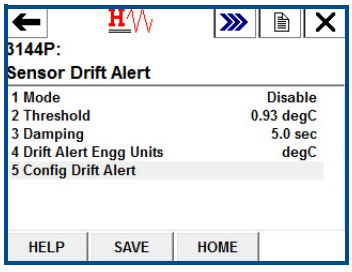

6. Select **1 Enable** to activate Sensor Drift Alert and press **ENTER**.

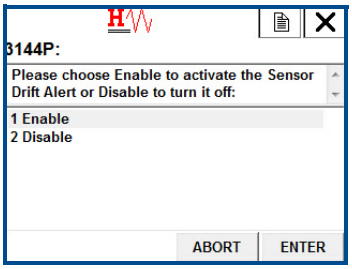

7. When prompted, select whether you want Sensor Drift Alert to put the transmitter into “Alarm” or “Warning”, and press **ENTER**. Enabling Drift Alert Option Warning only will set a flag (through HART) whenever the maximum acceptable difference between Sensor 1 and Sensor 2 has been exceeded. Enabling Drift Alert Option Alarm will send the transmitter's analog signal into alarm when Drift Alert is detected.

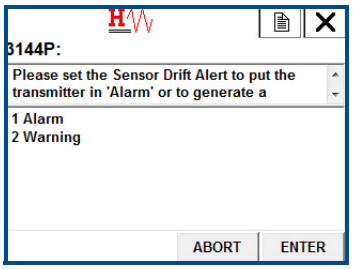

8. Select the engineering units you would like to use and press **ENTER**. Choose from degC, degF, degR, Kelvin, mV, Ohms.

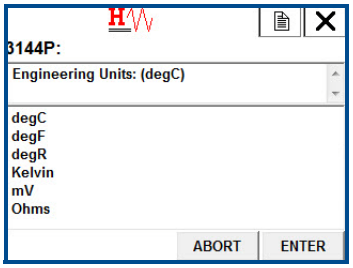

9. Enter the Sensor Drift Alert threshold value and press **ENTER**. This is a digital value that triggers the Drift Alert feature. When this limit is exceeded, the transmitter will go into alarm or generate a warning (depending on the alert mode chosen previously).

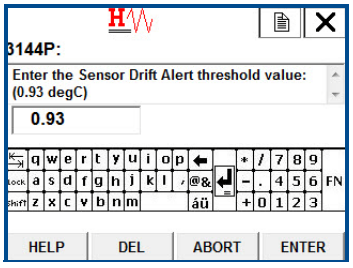

10. Enter a damping value between 0 and 32 and press **ENTER**. This damping value is additional damping applied to the result of (S1-S2) after each sensor's individual damping value has already been applied.

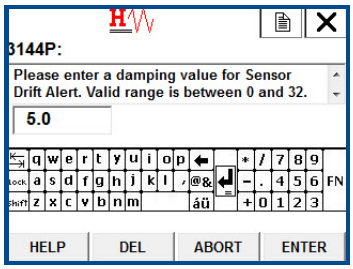

11. Configuration is complete. Press **OK**.

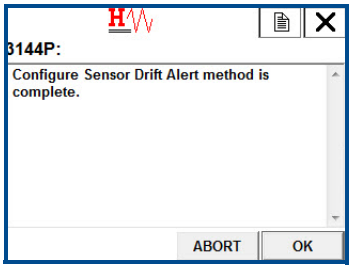

Disable Sensor Drift Alert in manual setup: Fast Keys 2-2-4-2-5

1. From the Home Screen, select **2 Configure**.

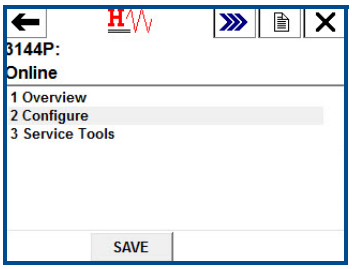

2. Select **2 Manual Setup**.

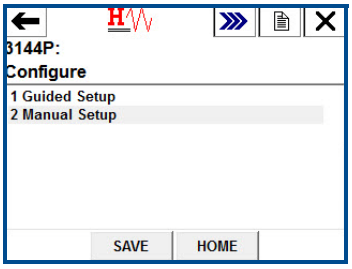

3. Select **4 Diagnostics**.

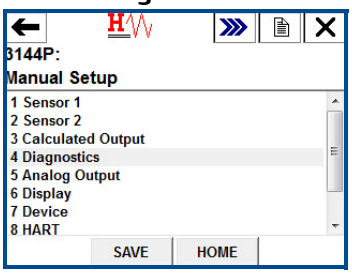

4. Select **2 Sensor Drift Alert**.

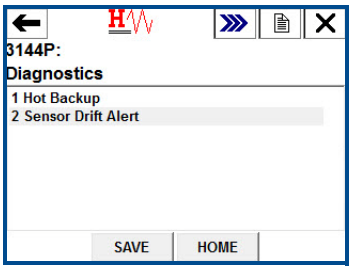

5. Select **5 Config Drift Alert**.

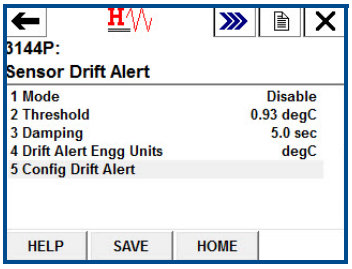

6. Select **2 Disable** to disable Sensor Drift alert and press ENTER.

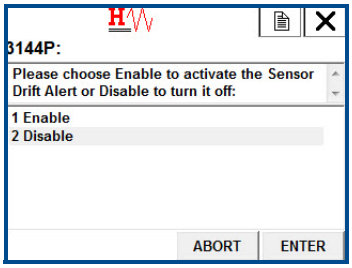

7. Sensor Drift Alert has been disabled. Press **OK**.



To verify that Sensor Drift Alert is enabled: Fast Keys 2-2-4-2

1. From the Home Screen, select **2 Configure**.

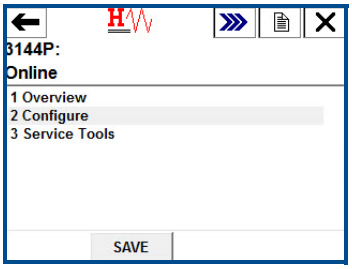

2. Select **2 Manual Setup**.

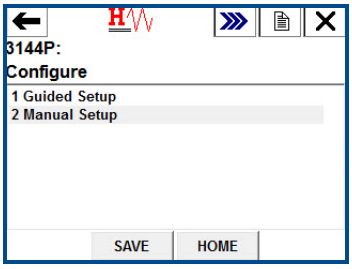

3. Select **4 Diagnostics**.

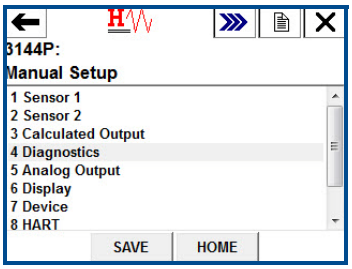

4. Select **2 Sensor Drift Alert**.

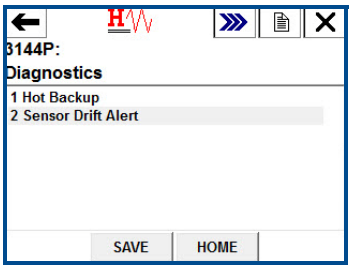

5. You will see this screen. Under **1 Mode**, it will say either Alarm or Warning if enabled, or **Disable**. If enabled, it will also display the current diagnostic values.

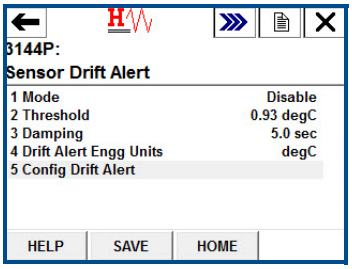

Active Sensor Drift Alerts

Viewing Active Sensor Drift Alerts: Fast Keys 1-1-2

When the Sensor Drift Alert diagnostic detects a drifting sensor, the LCD display will display a message; “ALARM DRIFT ALERT” if configured in Alarm Mode and “WARN DRIFT ALERT” if configured in Warning Mode.





1. Select **1 Overview**.

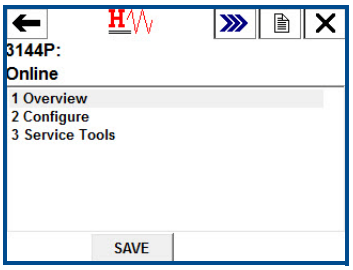

2. If Sensor Drift Alert is configured in Alarm Mode, select **1 Device Status: Failed**.

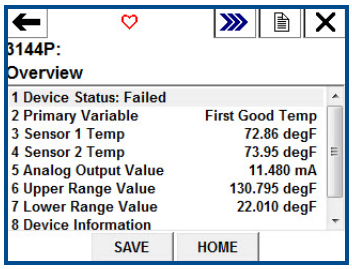

If Sensor Drift Alert is configured in Warning Mode, select **1 Device Status: Maintenance**.

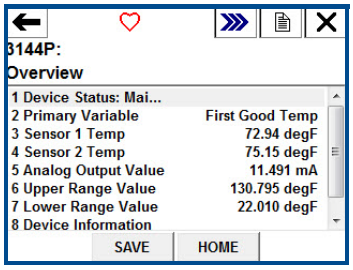

3. Select **2 Sensor Drift Alert Active**.

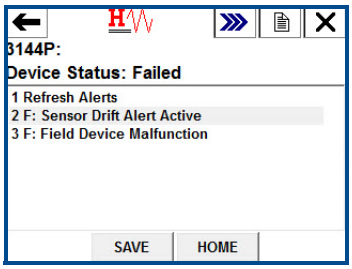

Resetting Active Sensor Drift Alerts: Fast Keys 1-1-1

1. Select **1 Overview**.

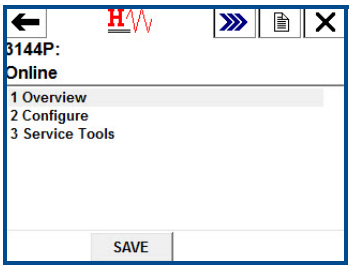

2. Select **1 Device Status: (Maintenance or Failed)**.

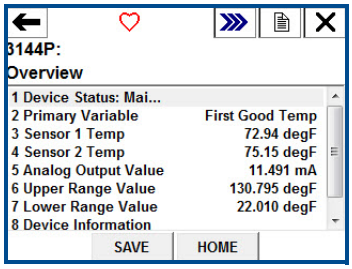

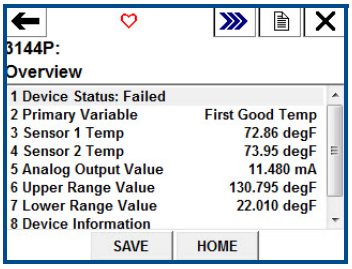

3. Select **1 Refresh Alerts**.

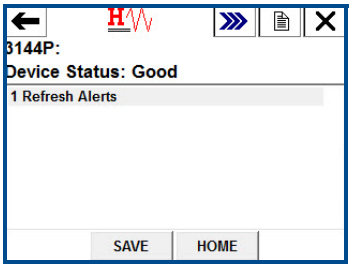

3.8 Device output configuration

Device output configuration contains PV range values, alarm and saturation, HART output, and LCD display options.

3.8.1 PV range values

HART 5 Fast Keys	2, 2, 5, 5
HART 7 Fast Keys	2, 2, 5, 5

Field communicator

The *PV URV* and *PV LRV* commands, found in the *PV Range Values* menu screen, allow the user to set the transmitter's lower and upper range values using limits of expected readings. See Table A-1 on page 196 for unit and range setting limits. The range of expected readings is defined by the Lower Range Value (LRV) and Upper Range Value (URV). The transmitter range values may be reset as often as necessary to reflect changing process conditions. From the *PV Range Values* screen select *1 PV LRV* to change the lower range value and *2 PV URV* to change the upper range value.

Reranging the transmitter sets the measurement range to the limits of the expected readings, which maximizes transmitter performance; the transmitter is most accurate when operated within the expected temperature range for the application.

The re-range functions should not be confused with the trim function. Although re-ranging the transmitter matches a sensor input to a 4-20 mA output, as in conventional calibration, it does not affect the transmitter's interpretation of the input.

3.8.2 Process variable damping

HART 5 Fast Keys	Sensor 1: 2, 2, 1, 6 Sensor 2: 2, 2, 2, 6
HART 7 Fast Keys	Sensor 1: 2, 2, 1, 7 Sensor 1: 2, 2, 2, 7

Field communicator

The *PV Damp* command changes the response time of the transmitter to smooth variations in output readings caused by rapid changes in input. Determine the appropriate damping setting based on the necessary response time, signal stability, and other requirements of the loop dynamics of the system. The default damping value is 5.0 seconds and can be reset to any value between 1 and 32 seconds.

The value chosen for damping affects the response time of the transmitter. When set to zero (disabled), the damping function is off and the transmitter output reacts to changes in input as quickly as the intermittent sensor algorithm allows. Increasing the damping value increases transmitter response time.

Damping

Damping values may be used for, and should equal, the update rate for Sensor 1, Sensor 2, and sensor differential. Sensor configuration automatically calculates a damping value. The default damping value is 5 seconds. Damping may be disabled by setting the parameter damping value to 0 seconds. The maximum damping value allowed is 32 seconds.

An alternate damping value may be entered with the following restrictions:

1. Single Sensor Configuration:
   - 50 Hz or 60 Hz Line Voltage Filters have a minimum user-configurable damping value of 0.5 seconds
2. Dual Sensor Configuration:
   - 50 Hz Line Voltage Filter a minimum user-configurable damping value of 0.9 seconds
   - 60 Hz Line Voltage Filter a minimum user-configurable damping value of 0.7 seconds

Figure 3-7. Change in Input versus Change in Output with Damping Enabled

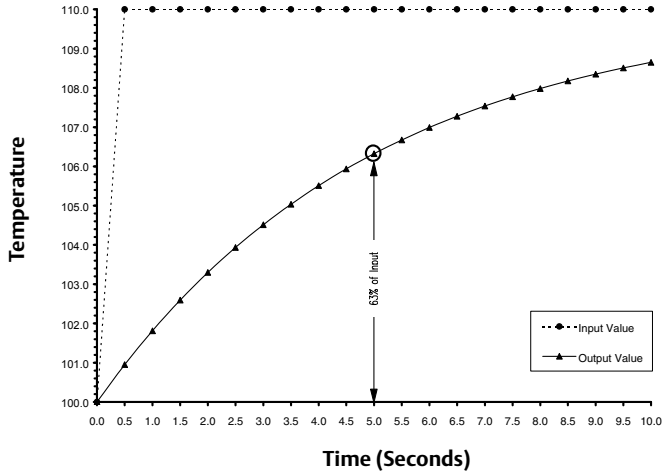

3.8.3 Alarm and saturation

HART 5 Fast Keys	2, 2, 5, 6
HART 7 Fast Keys	2, 2, 5, 6

Field communicator

The *Alarm/Saturation* command allows the user to view the alarm settings (Hi or Low). This command can change the alarm and saturation values. To change the alarm and saturation values, select the value to be changed, either *1 Low Alarm*, *2 High Alarm*, *3 Low Sat*, *4 High Sat,* or *5 Preset Alarms* and enter the desired new value which must fall within the guidelines below:

- The low alarm value must be between 3.50 and 3.75 mA
- The high alarm value must be between 21.0 and 23.0 mA

The low saturation level must be between the low alarm value plus 0.1 mA and 3.9 mA for the standard HART transmitter. For the safety certified transmitter, the lowest saturation setting is 3.7 mA and the highest is 20.9 mA.

Example: The low alarm value has been set to 3.7 mA. Therefore, the low saturation level, S, must be as follows: $3.8 \leq S \leq 3.9$ mA.

The high saturation level must be between 20.5 mA and the high alarm value minus 0.1 mA for the HART transmitter. The highest saturation setting for the transmitter is 20.9 mA.

Example: The high alarm value has been set to 20.8 mA. Therefore, the low saturation level, S, must be as follows: $20.5 \leq S \leq 20.7$ mA.

Preset alarms can either be *1Rosemount* or *2 NAMUR-compliant*. Use the failure mode switch on the front side of the electronics (see "Switch Location" on page 203) to set whether the output will be driven to high or low alarm in the case of failure.

3.8.4 HART output

HART 5 Fast Keys	2, 2, 8
HART 7 Fast Keys	2, 2, 8

The *HART Output* command allows the user to make changes to the multidrop address, initiate burst mode, or make changes to the burst options.

3.8.5 LCD display options

HART 5 Fast Keys	2, 2, 6
HART 7 Fast Keys	2, 2, 6

The *LCD Display Option* command sets the meter options, including engineering units and decimal point. Change the LCD display settings to reflect necessary configuration parameters when adding a LCD display or reconfiguring the transmitter. Transmitters without LCD displays are shipped with the meter configuration set to “Not Used.”

3.9 Device information

Access the transmitter information variables online using the Field Communicator or other suitable communications device. The following is a list of transmitter information variables, including device identifiers, factory-set configuration variables, and other information. A description of each variable, the corresponding fast key sequence, and a review are provided.

3.9.1 Tag

HART 5 Fast Keys	2, 2, 7, 1, 1
HART 7 Fast Keys	2, 2, 7, 1, 1

The *Tag* variable is the easiest way to identify and distinguish between transmitters in multi-transmitter environments. It is used to label transmitters electronically according to the requirements of the application. The defined tag is automatically displayed when a HART-based communicator establishes contact with the transmitter at power-up. The tag may be up to eight characters long and has no impact on the primary variable readings of the transmitter.

3.9.2 Long tag

HART 5 Fast Keys	HART 7 Only
HART 7 Fast Keys	2, 2, 7, 1, 2

Long Tag is similar to Tag. The long tag is different in that the Long tag can be up to 32 Characters instead of the 8 characters in traditional Tag.

3.9.3 Date

HART 5 Fast Keys	2, 2, 7, 1, 2
HART 7 Fast Keys	2, 2, 7, 1, 3

The *Date* command is a user-defined variable that provides a place to save the date of the last revision of configuration information. It has no impact on the operation of the transmitter or the HART-based communicator.

3.9.4 Descriptor

HART 5 Fast Keys	2, 2, 7, 1, 3
HART 7 Fast Keys	2, 2, 7, 1, 4

The *Descriptor* variable provides a longer user-defined electronic label to assist with more specific transmitter identification than is available with tag. The descriptor may be up to 16 characters long and has no impact on the operation of the transmitter or the HART-based communicator.

3.9.5 Message

HART 5 Fast Keys	2, 2, 7, 1, 4
HART 7 Fast Keys	2, 2, 7, 1, 5

The *Message* variable provides the most specific user-defined means for identifying individual transmitters in multi-transmitter environments. It allows for 32 characters of information and is stored with the other configuration data. The message variable has no impact on the operation of the transmitter or the HART-based communicator.

3.10 Measurement filtering

3.10.1 50/60 Hz filter

HART 5 Fast Keys	2, 2, 7, 5, 1
HART 7 Fast Keys	2, 2, 7, 5, 1

The *50/60 Hz Filter* (also known as Line Voltage Filter or AC Power Filter) command sets the transmitter electronic filter to reject the frequency of the AC power supply in the plant. The 60 Hz or 50 Hz mode can be chosen. The factory default for this setting is 60 Hz.

Note
In high noise environments, normal mode is recommended.

3.10.2 Master reset

HART 5 Fast Keys	2, 2, 7, 6
HART 7 Fast Keys	2, 2, 7, 6

Master Reset resets the electronics without actually powering down the unit. It does not return the transmitter to the original factory configuration.

3.10.3 Intermittent sensor detect

HART 5 Fast Keys	2, 2, 7, 5, 2
HART 7 Fast Keys	2, 2, 7, 5, 2

The following steps indicate how to turn the Intermittent Sensor Detect (also knows as Transient Filter) feature **ON** or **OFF**. When the transmitter is connected to a Field Communicator, use the fast key sequence and choose **ON** (normal setting) or **OFF**.

3.10.4 Intermittent threshold

HART 5 Fast Keys	2, 2, 7, 5
HART 7 Fast Keys	2, 2, 7, 5

The threshold value can be changed from the default value of 0.2%. Turning the Intermittent Sensor Detect feature **OFF** or leaving it **ON** and increasing the threshold value above the default does not affect the time needed for the transmitter to output the correct alarm signal after detecting a true open sensor condition. However, the transmitter may briefly output a false temperature reading for up to one update in either direction (see Figure 3-9 on page 98) up to the threshold value (100% of sensor limits if Intermittent Sensor Detect is **OFF**). Unless a rapid response rate is necessary, the suggested setting is **ON** with 0.2% threshold.

Figure 3-8. Open Sensor Response

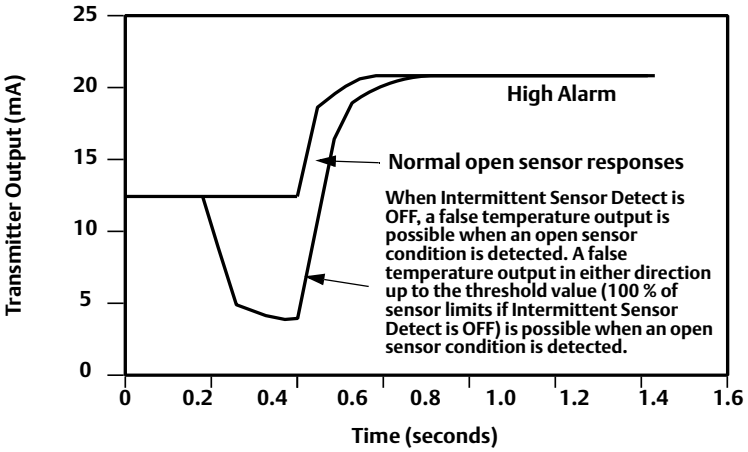

Intermittent Sensor Detect (advanced feature)

The Intermittent Sensor Detect feature is designed to guard against process temperature readings caused by intermittent open sensor conditions. An intermittent sensor condition is an open sensor condition that lasts less than one update. By default, the transmitter is shipped with the Intermittent Sensor Detect feature switched **ON** and the threshold value set at 0.2% of sensor limits. The Intermittent Sensor Detect feature can be switched **ON** or **OFF** and the threshold value can be changed to any value between 0 and 100% of the sensor limits with a Field Communicator.

Transmitter behavior with Intermittent Sensor Detect ON

When the Intermittent Sensor Detect feature is switched **ON**, the transmitter can eliminate the output pulse caused by intermittent open sensor conditions. Process temperature changes (ΔT) within the threshold value will be tracked normally by the transmitter's output. A ΔT greater than the threshold value will activate the intermittent sensor algorithm. True open sensor conditions will cause the transmitter to go into alarm.

The threshold value of the 3144P should be set at a level that allows the normal range of process temperature fluctuations; too high and the algorithm will not be able to filter out intermittent conditions; too low and the algorithm will be activated unnecessarily. The default threshold value is 0.2% of the sensor limits.

Transmitter behavior with Intermittent Sensor Detect OFF

When the Intermittent Sensor Detect feature is switched **OFF**, the transmitter tracks all process temperature changes, even from an intermittent sensor. (The transmitter in effect behaves as though the threshold value had been set at 100%.) The output delay due to the intermittent sensor algorithm will be eliminated.

3.10.5 Open sensor holdoff

HART 5 Fast Keys	2, 2, 7, 4
HART 7 Fast Keys	2, 2, 7, 4

The *Open Sensor Holdoff* option, at the normal setting, enables the 3144P to be more robust under heavy EMI conditions. This is accomplished by the software having the transmitter perform additional verification of the open sensor status prior to activating the transmitter alarm. If the additional verification shows that the open sensor condition is not valid, the transmitter will not go into alarm.

For users of the 3144P that desire a more vigorous open sensor detection, the Open Sensor Holdoff option can be changed to a fast setting where the transmitter will report an open sensor condition without additional verification of the open condition.

3.11 Diagnostics and service

Diagnostics and service functions listed below are primarily for use after field installation. The Transmitter Test feature is designed to verify that the transmitter is operating properly, and can be performed either on the bench or in the field. The Loop Test feature is designed to verify proper loop wiring and transmitter output, and should only be performed after you install the transmitter.

3.11.1 Loop test

HART 5 Fast Keys	3, 5, 1
HART 7 Fast Keys	3, 5, 1

Field Communicator

The Loop Test command verifies the output of the transmitter, the integrity of the loop, and the operations of any recorders or similar devices installed in the loop.

3.12 Multidrop communication

Multidropping refers to the connection of several transmitters to a single communications transmission line. Communication between the host and the transmitters takes place digitally with the analog output of the transmitters deactivated. Many Rosemount transmitters can be multidropped. With the HART communications protocol, up to 15 transmitters can be connected on a single twisted pair of wires, or over leased phone lines.

Multidrop installation requires consideration of the update rate necessary from each transmitter, the combination of transmitter models, and the length of the transmission line. Communication with transmitters can be accomplished with Bell 202 modems and a host implementing HART protocol. Each transmitter is identified by a unique address (1–15) and responds to the commands defined in the HART protocol. Field communicators and AMS Device Manager can test, configure, and format a multidropped transmitter the same way as a transmitter in a standard point-to-point installation.

Figure 3-9. Typical Multidropped Network

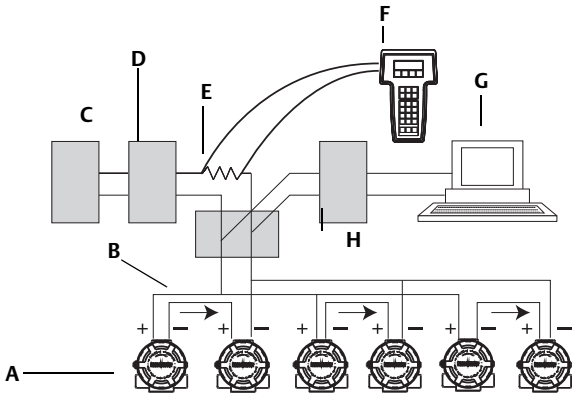

A. 3144P HART transmitter
B. 4–20 mA
C. Power supply
D. Power supply impedance
E. 250 Ω
F. Handheld terminal
G. Computer or DCS
H. HART interface

Figure 3-9 shows an example of a typical multidrop network. Do not use this figure as an installation diagram. Emerson Process Management product support can help with specific requirements for multidrop applications. Note that multidrop is not suitable for safety-certified applications and installations.

A HART-based communicator can test, configure, and format a multidropped 3144P transmitter the same as in a standard point-to-point installation.

Note
The 3144P is set to address 0 at the factory, allowing it to operate in the standard point-to-point manner with a 4–20 mA output signal. To activate multidrop communication, the transmitter address must be changed to a number between 1 and 15, which deactivates the 4–20 mA analog output, sending it to a fixed 4 mA output. The failure mode current is also disabled. It also disables the failure mode alarm signal, which is controlled by the upscale/downscale switch/jumper position. Failure signals in multidropped transmitters are communicated through HART messages.

3.13 Use with the HART Tri-Loop

To prepare the 3144P transmitter with dual-sensor option for use with a Rosemount 333 HART Tri-Loop, the transmitter must be configured to Burst Mode and the process variable output order must be set. In Burst Mode, the transmitter provides digital information for the four process variables to the HART Tri-Loop. The HART Tri-Loop divides the signal into separate 4–20 mA loops for up to three of the following choices:

- primary variable (PV)
- secondary variable (SV)
- tertiary variable (TV)
- quaternary variable (QV)

When using the 3144P transmitter with dual-sensor option in conjunction with the HART Tri-Loop, consider the configuration of the differential, average, first good temperatures, Sensor Drift Alert, and the Hot Backup feature (if applicable).

Note
The procedures are to be used when the sensors and transmitters are connected, powered, and functioning properly. Also, a field communicator must be connected and communicating to the transmitter control loop. For communicator usage instructions, see “Commissioning” on page 10.

Set the transmitter to Burst Mode

HART 5 Fast Keys	2, 2, 8, 4
HART 7 Fast Keys	2, 2, 8, 4

Set process variable output order

HART 5 Fast Keys	2, 2, 8, 5
HART 7 Fast Keys	2, 2, 8, 5

Note
Take careful note of the process variable output order. The HART Tri-Loop must be configured to read the variables in the same order.

Special considerations

To initiate operation between a 3144P transmitter with dual-sensor option and the HART Tri-Loop, consider the configuration of both the differential, average, first good temperatures, Sensor Drift Alert, and the Hot Backup feature (if applicable).

Differential temperature measurement

To enable the differential temperature measurement feature of a dual-sensor 3144P operating in conjunction with the HART Tri-Loop, adjust the range end points of the corresponding channel on the HART Tri-Loop to include zero. For example, if the secondary variable is to report the differential temperature, configure the transmitter accordingly (see "Set process variable output order" on page 99) and adjust the corresponding channel of the HART Tri-Loop so one range end point is negative and the other is positive.

Hot Backup feature

To enable the Hot Backup feature of a 3144P transmitter with dual-sensor option operating in conjunction with the HART Tri-Loop, ensure that the output units of the sensors are the same as the units of the HART Tri-Loop. Use any combination of RTDs or thermocouples as long as the units of both match the units of the HART Tri-Loop.

Using the Tri-Loop to detect sensor drift alert

The dual-sensor 3144P transmitter sets a failure flag (through HART) whenever a sensor failure occurs. If an analog warning is required, the HART Tri-Loop can be configured to produce an analog signal that can be interpreted by the control system as a sensor failure.

Use these steps to set up the HART Tri-Loop to transmit sensor failure alerts.

1. Configure the dual-sensor 3144P variable map as shown.

Variable	Mapping
PV	Sensor 1 or Sensor Average
SV	Sensor 2
TV	Differential Temperature
QV	As Desired

2. Configure Channel 1 of the HART Tri-Loop as TV (differential temperature). If either sensor should fail, the differential temperature output will be +9999 or –9999 (high or low saturation), depending on the position of the Failure Mode Switch (see "Alarm switch (HART)" on page 13).

3. Select temperature units for Channel 1 that match the differential temperature units of the transmitter.

4. Specify a range for the TV such as –100 to 100 °C. If the range is large, then a sensor drift of a few degrees will represent only a small percent of range. If Sensor 1 or Sensor 2 fails, the TV will be +9999 (high saturation) or –9999 (low saturation). In this example, zero is the midpoint of the TV range. If a ΔT of zero is set as the lower range limit (4 mA), then the output could saturate low if the reading from Sensor 2 exceeds the reading from Sensor 1. By placing a zero in the middle of the range, the output will normally stay near 12 mA, and the problem will be avoided.

5. Configure the DCS so that TV < –100 °C or TV > 100 °C indicates a sensor failure and, for example, TV ≤ –3 °C or TV ≥ 3 °C indicates a drift alert. See Figure 3-10.

Figure 3-10. Tracking Sensor Drift and Sensor Failure with Differential Temperature

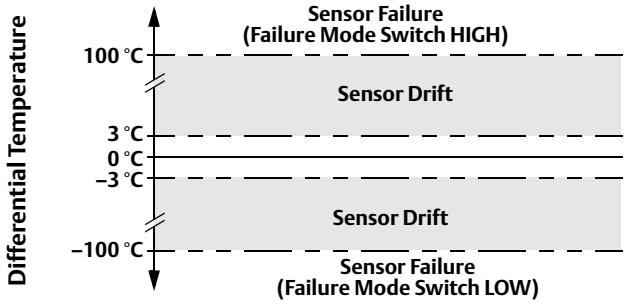

Advanced diagnostic

Thermocouple degradation

Problem description: Thermocouples can fail unexpectedly, potentially causing lost production and increased maintenance costs when unplanned service is performed.

Our solution: Thermocouple Degradation Diagnostic acts as a gauge of general thermocouple health and is indicative of any major changes in the status of the thermocouple or the thermocouple loop. The transmitter monitors for increasing resistance of the thermocouple loop to detect drift conditions or wiring condition changes. The degrading thermocouple can be caused by wire thinning, sensor breakdown, moisture intrusion or corrosion and can be an indication of an eventual sensor failure.

How it works: The thermocouple degradation diagnostic measures the amount of resistance on a thermocouple sensor path. Ideally a thermocouple would have zero resistance, but in reality it has some resistance especially for long thermocouple extension wires. As the sensor loop degrades (including sensor degradation and wire or junctions degradation), the resistance of the loop increases. First, the transmitter is configured to a baseline by the user. Then, at least once per second, the degradation diagnostic monitors the resistance in the loop by sending a pulsed current (in microamps) on the loop, measuring the voltage induced and calculating the effective resistance. As the resistance increases, the diagnostic can detect when the resistance exceeds the threshold set by the user at which the diagnostic will provide a digital alert. This feature is not intended to be a precise measurement of thermocouple status, but is a general indicator of thermocouple and thermocouple loop health by providing trending over time.

The thermocouple degradation diagnostic does not detect shorted thermocouple conditions.

Take away: “Thermocouple Diagnostic monitors the health of a thermocouple loop”

Target applications: Control loops, safety loops, “problem thermocouples”

Configure Thermocouple Degradation in guided setup

Enable Thermocouple Degradation in Guided Setup: Fast Keys 2-1-7-1

1. From the Home Screen, select **2 Configure**.

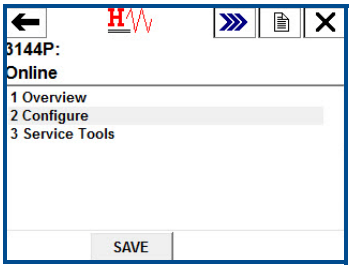

2. Select **1 Guided Setup.**

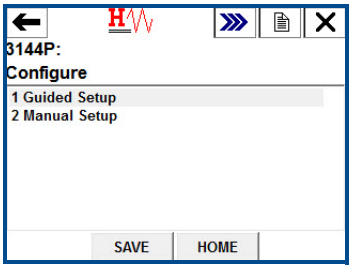

3. Select **7 Diagnostics Suite**.

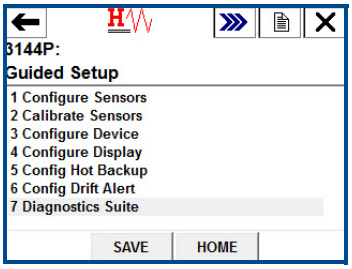

4. Select **1 Config TC Diagnostic**.

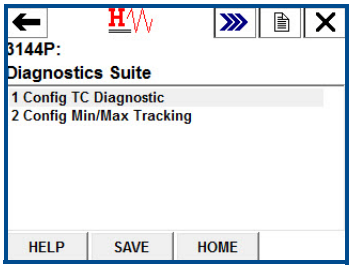

5. Select the sensor for which Thermocouple Diagnostic will be configured. Choose from **1 Sensor 1** or **2 Sensor 2** and press **ENTER**.

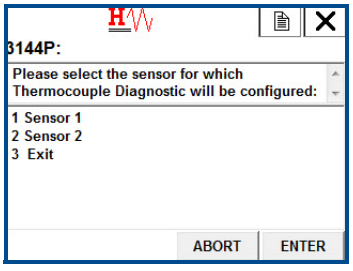

6. Select **1 Enable** to enable Thermocouple Diagnostic and press **ENTER**.

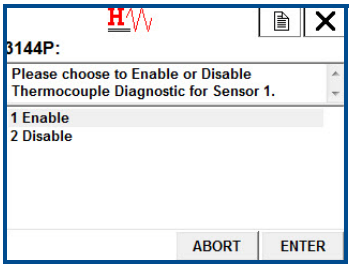

7. Decide if you would like to change the trigger level or the sensor you are configuring. If so, choose **1 Yes**. If not, choose **2 No. Return to Main Screen**.

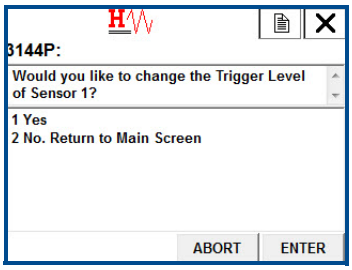

8. **IF YES**: Select a trigger level for the sensor you are configuring and press **ENTER**. Choose between a fixed 5K Ohms, Baseline x 2, Baseline x 3, and Baseline x 4.

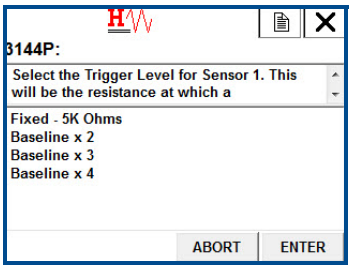

9. Review the summary provided on the communicator and press **OK** when satisfied or **ABORT** to exit.

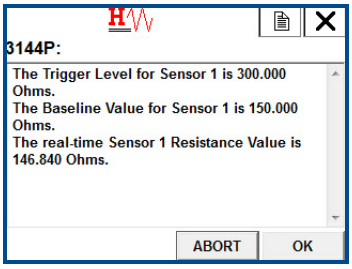

10. Decide if you would like to reset the baseline resistance of the thermocouple you are configuring. If so, choose **1 Yes**. If not, choose **2 No. Return to Main Screen**.

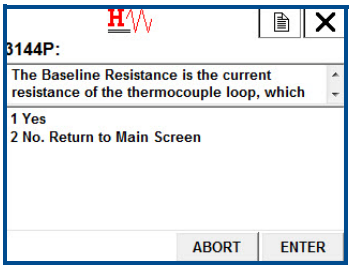

11. **IF YES**: Review the summary provided on the communicator and press **OK** when satisfied or **ABORT** to exit.

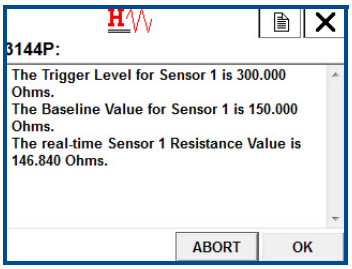

Disable thermocouple degradation in guided setup: Fast Keys 2-1-7-1

1. From the Home Screen, select **2 Configure**.

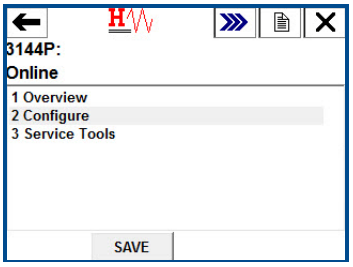

2. Select **1 Guided Setup.**

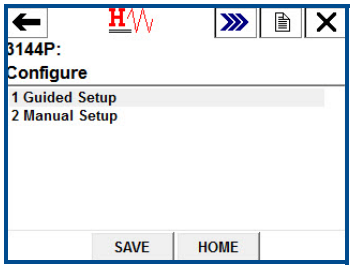

3. Select **7 Diagnostics Suite**.

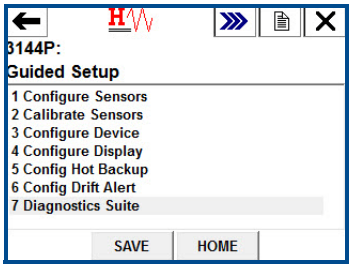

4. Select **1 Config TC Diagnostic**.

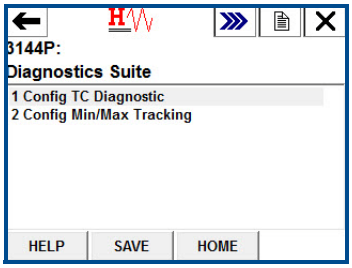

5. Select the sensor for which Thermocouple Diagnostic will be disabled. Choose from **1 Sensor 1** or **2 Sensor 2** and press **ENTER**.

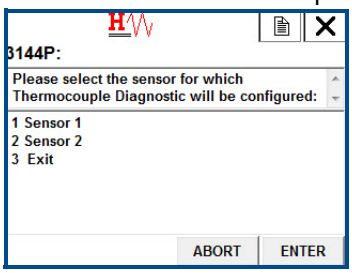

6. Select **2 Disable** to disable Thermocouple Diagnostic and press **ENTER**.

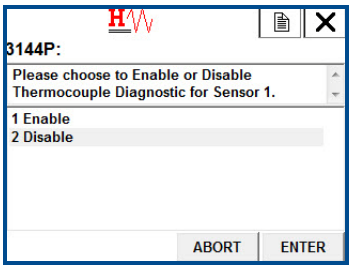

7. Thermocouple Degradation has been disabled for the selected sensor. Press **OK**.

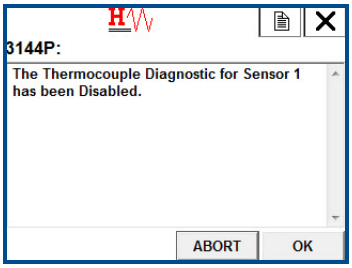

Configure thermocouple degradation in manual setup

Enable thermocouple degradation in manual setup: Fast Keys 2-2-4-3-4

1. From the Home Screen, select **2 Configure**.

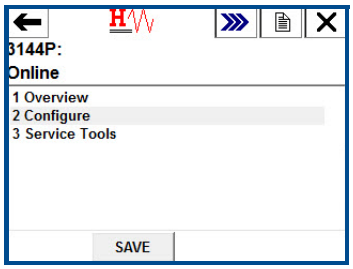

2. Select **2 Manual Setup.**

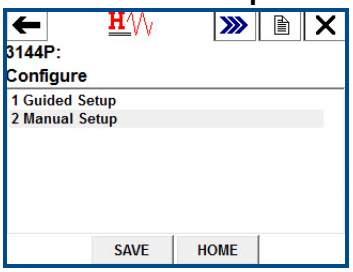

3. Select **4 Diagnostics**.

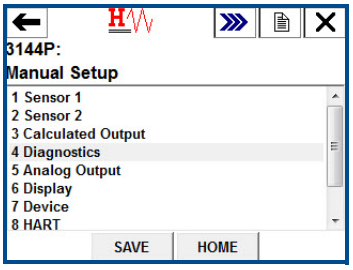

4. Select **3 Sensor and Process Diagnostics**.

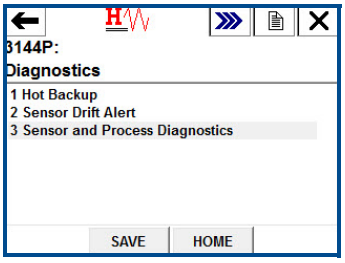

5. Select **4 Config TC Diagnostic**.

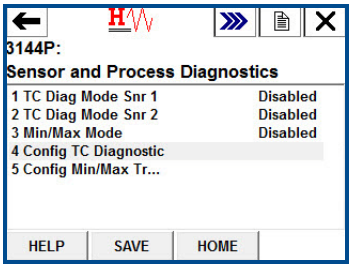

6. Select the sensor for which Thermocouple Diagnostic will be configured. Choose from **1 Sensor 1** or **2 Sensor 2** and press **ENTER**. Select **3 Exit** to exit the setup.

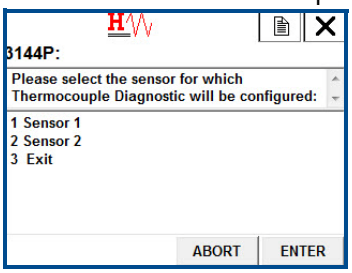

7. Select **1 Enable** to enable Thermocouple Diagnostic and press **ENTER**.

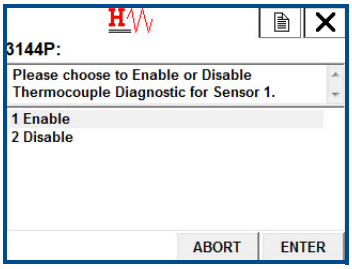

8. Decide if you would like to change the trigger level or the sensor you are configuring. If so, choose **1 Yes**. If not, choose **2 No. Return to Main Screen**.

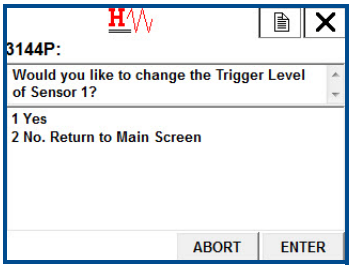

9. **IF YES**: Select a trigger level for the sensor you are configuring and press **ENTER**. Choose between a fixed 5K Ohms, Baseline x 2, Baseline x 3, and Baseline x 4.

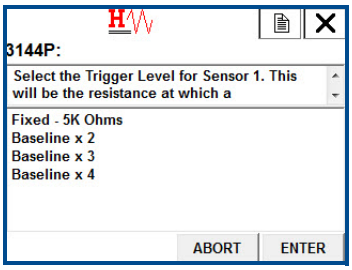

10. Review the summary provided on the communicator and press **OK** when satisfied or **ABORT** to exit.

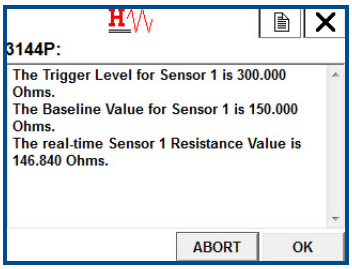

11. Decide if you would like to reset the baseline resistance of the thermocouple you are configuring. If so, choose **1 Yes**. If not, choose **2 No. Return to Main Screen**.

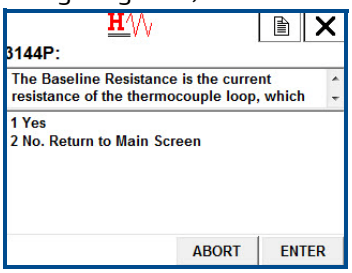

12. **IF YES**: Review the summary provided on the communicator and press **OK** when satisfied or **ABORT** to exit.

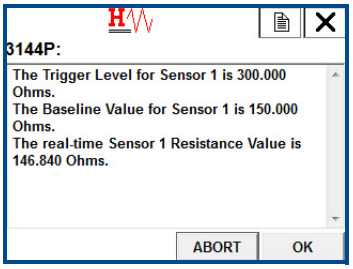

Disable Thermocouple Degradation in Manual Setup: Fast Keys 2-2-4-3-4

1. From the Home Screen, select **2 Configure**.

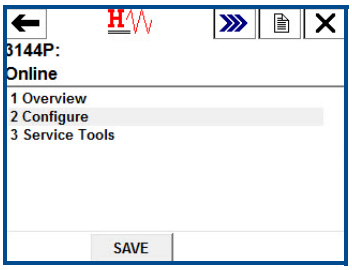

2. Select **2 Manual Setup.**

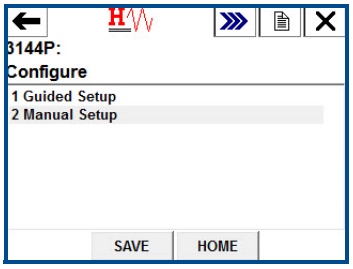

3. Select **4 Diagnostics.**

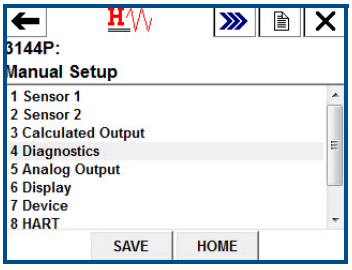

4. Select **3 Sensor and Process Diagnostics**.

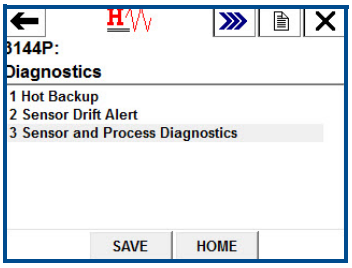

5. Select **4 Config TC Diagnostic**.

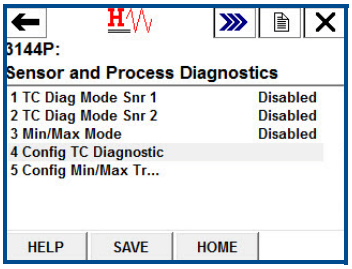

6. Select the sensor for which Thermocouple Diagnostic will be disabled. Choose from **1 Sensor 1** or **2 Sensor 2** and press **ENTER**.

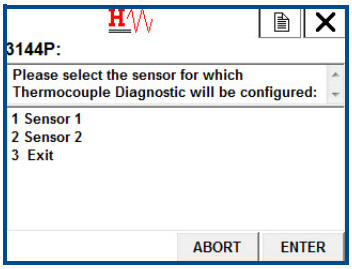

7. Select **2 Disable** to disable Thermocouple Diagnostic and press **ENTER**.

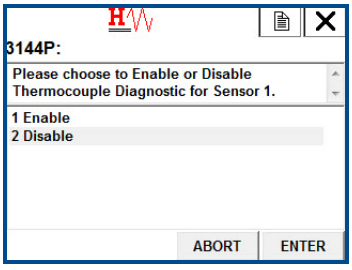

8. Thermocouple Degradation has been disabled for the selected sensor. Press **OK**.

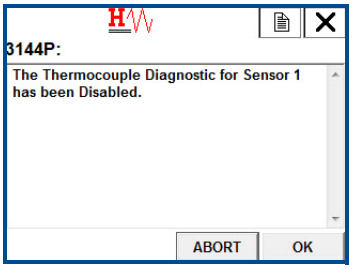

Active Thermocouple Degradation alerts

To verify that Thermocouple Degradation is enabled: Fast Keys 2-2-4

1. From the Home Screen, select **2 Configure**.

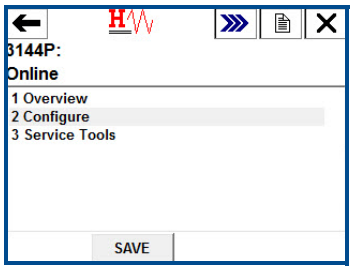

2. Select **2 Manual Setup.**

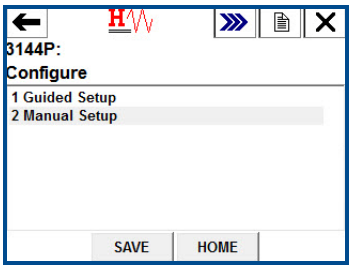

3. Select **4 Diagnostics**.

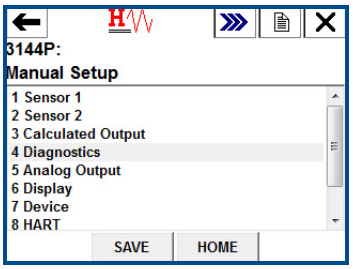

4. Select **3 Sensor and Process Diagnostics**.

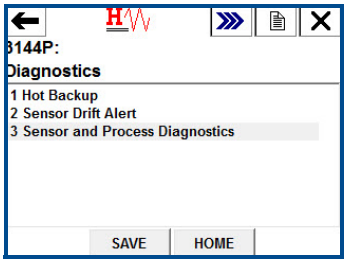

5. **1 TC Diag Mode Snr 1** will show Enabled if Thermocouple Diagnostic is enabled for Sensor 1, and **Disabled** if Thermocouple Diagnostic is disabled.

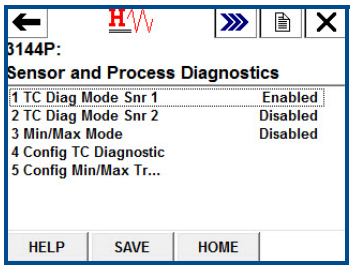

2 TC Diag Mode Snr 2 will show Enabled if Thermocouple Diagnostic is enabled for Sensor 2, and **Disabled** if Thermocouple Diagnostic is disabled.

To review the configuration of the thermocouple diagnostic: Fast Keys 2-2-4

1. From the Home screen, **3 Service Tools**.

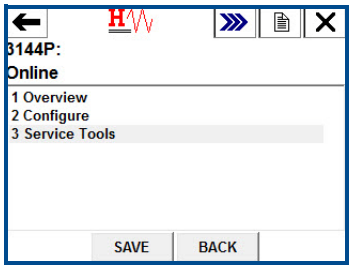

2. Select **4 Maintenance**.

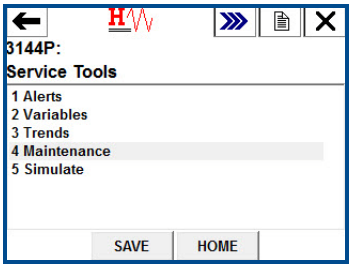

3. Select **1 T/C Diag Snsr 1** or **2 T/C Diag Snsr 2** depending on which sensor you are interested in.

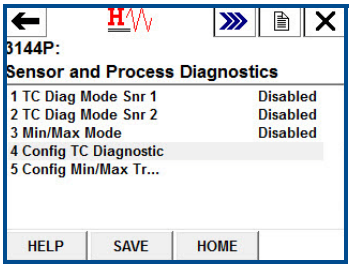

4. Select **3 TC Diag Config** to view the configuration information of your sensor.

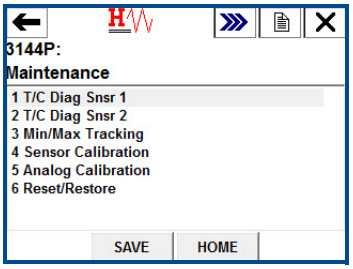

5. To Reset Baseline Value: If you wish to reset the baseline value of your sensor, select **4 Reset Baseline** and press **OK**.

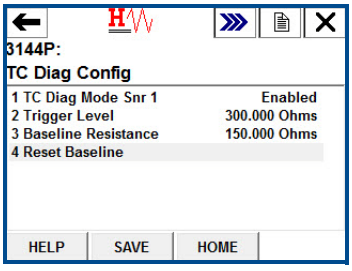

Viewing Thermocouple Diagnostic Alerts: Fast Keys 1-1-2

When the Thermocouple Degradation diagnostic detects a degraded sensor, the LCD display will display a message; “ALARM SNSR 1 FAIL AO”







1. Select **1 Overview**.

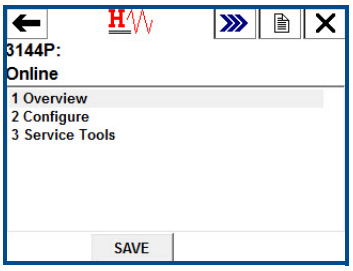

2. Select **1 Device Status: Maintenance**.

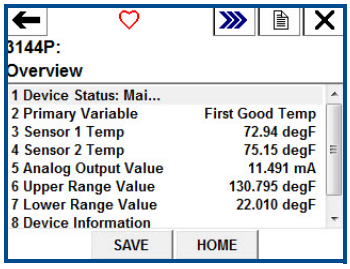

3. If Sensor 1 has degraded, select **2 M: Sensor 1 Degraded.**

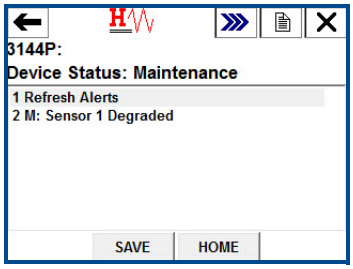

If Sensor 2 has degraded, select **2 M: Sensor 2 Degraded.**

Resetting Thermocouple Degradation Alerts: Fast Keys 1-1-1

1. Select **1 Overview**.

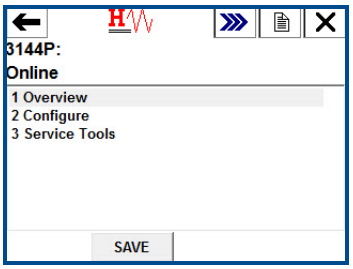

2. Select **1 Device Status: Maintenance**.

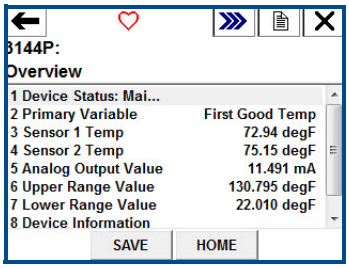

3. Select **1 Refresh Alerts**.

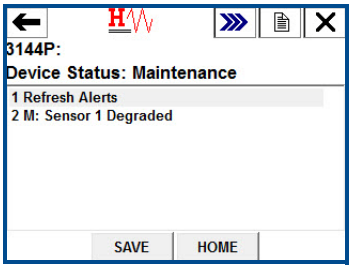

Minimum and maximum temperature tracking

Minimum and Maximum Temperature Tracking (Min/Max Tracking) can record lifetime minimum and maximum temperatures with date and time stamps on Rosemount 3144P Temperature Transmitters. This feature records values for Sensor 1, Sensor 2, differential and terminal (body) temperatures. Min/Max Tracking only records temperature maxima and minima obtained since the last reset, and is not a logging function.

To track maximum and minimum temperatures, Min/Max Tracking must be enabled in the transducer function block using a field communicator, AMS Device Manager, or other communicator. While enabled, this feature allows for a reset of information at any time, and all variables can be reset simultaneously. Additionally, Sensor 1, Sensor 2, differential, and terminal (body) temperature minimum and maximum values may be reset individually. Once a particular field has been reset, the previous values are overwritten.

Equipment: 3144PD1A2NAM5U1DA1, T/C Type K

Problem description: Sometimes it can be difficult to troubleshoot quality issues, or prove compliance. If your plant historian doesn't capture historical data from every temperature point, extreme process or ambient temperature fluctuations cannot be tracked.

Our solution: By utilizing Min/Max Tracking, you can be confident that you will have an easily accessible record of all important temperature extremes. Proving compliance and trouble-shooting quality issues become that much easier.

Take away: "Use Min/Max Tracking to verify installation temperature or to troubleshoot quality issues."

Configure Min/Max Tracking in guided setup

Enable Min/Max Tracking in guided setup: Fast Keys 2-1-7-2

1. From the Home screen, select **2 Configure**.

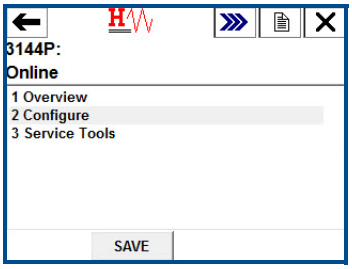

2. Select **1 Guided Setup**.

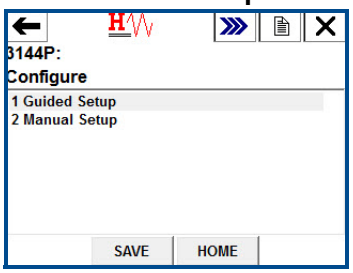

3. Select **7 Diagnostics Suite**.

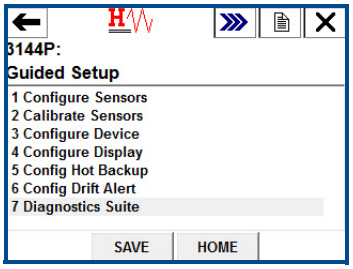

4. Select **2 Config Min/Max Tracking**.

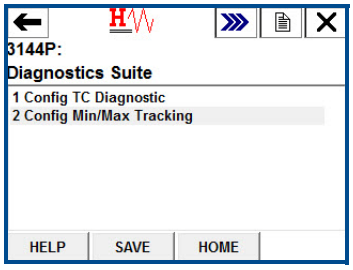

5. Select **1 Enable** to enable the Min/Max Tracking feature and press **ENTER**.

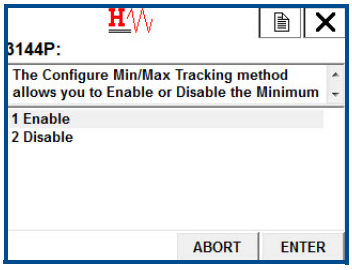

6. Select which parameters you would like to track the minimum and maximum temperatures for. Choose between Parameter 1, Parameter 2, Parameter 3, Parameter 4, or all Parameters.

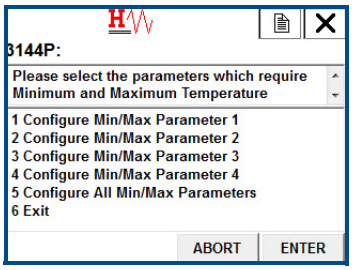

7. Select which variable to track with the selected parameter. Choose between Sensor 1, Sensor 2, Average Temperature, First Good Temperature, Differential Temperature, and Terminal Temperature. Press **ENTER**.

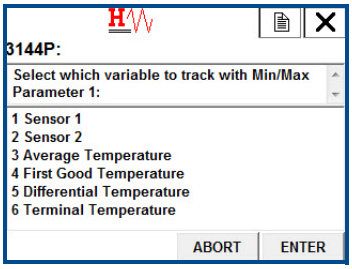

8. Repeat steps 6 - 7 until all desired parameters have been assigned a variable to track. Select **6 Exit** when finished.

Configure Min/Max Tracking in manual setup

Enable Min/Max Tracking in manual setup: Fast Keys 2-2-4-3-5

1. From the Home screen, select **2 Configure**.

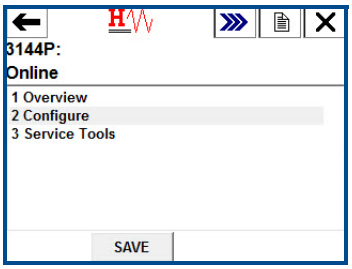

2. Select **2 Manual Setup.**

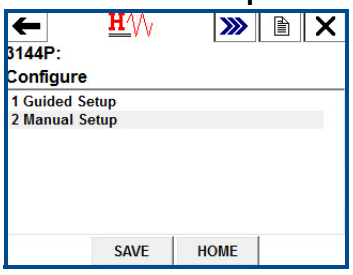

3. Select **4 Diagnostics**.

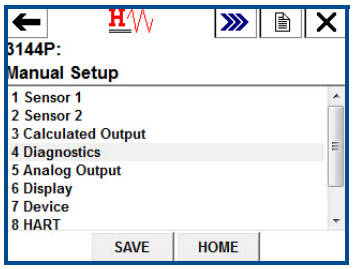

4. Select **3 Sensor and Process Diagnostics**.

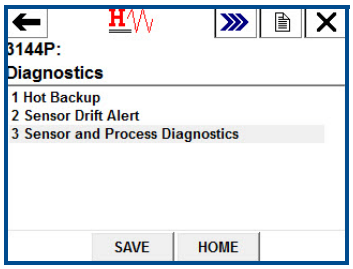

5. Select **5 Config Min/Max Tracking**.

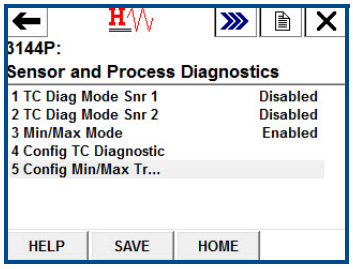

6. Select **1 Enable** to enable the Min/Max Tracking feature and press **ENTER**.

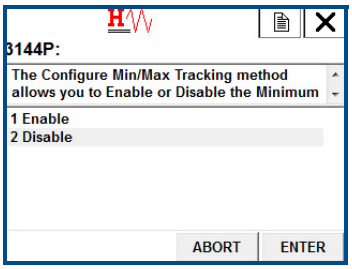

7. Select which parameters you would like to track the minimum and maximum temperatures for. Choose between Parameter 1, Parameter 2, Parameter 3, Parameter 4, or all Parameters.

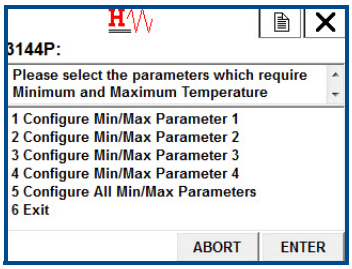

8. Select which variable to track with the selected parameter. Choose between Sensor 1, Sensor 2, Average Temperature, First Good Temperature, Differential Temperature, and Terminal Temperature. Press **ENTER**.

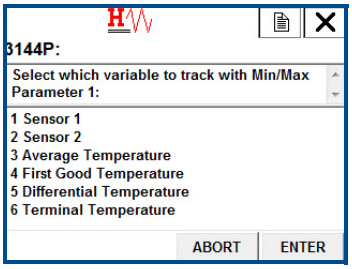

9. Repeat steps 7 - 8 until all desired parameters have been assigned a variable to track. Select **6 Exit** when finished.

To locate the Minimum and Maximum Temperatures and reset values: Fast Keys 3-4-3

1. From the Home screen, select **3 Service Tools**.

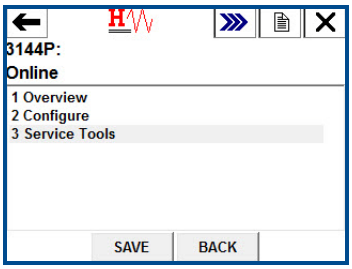

2. Select **4 Maintenance.**

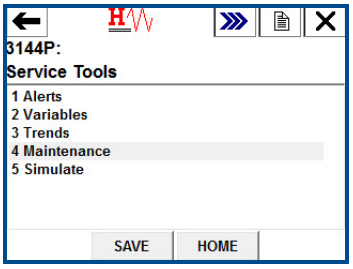

3. Select **3 Min/Max Tracking**.

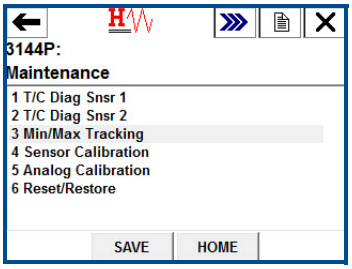

4. To view the minimum and maximum recorded temperatures of a parameter, select the parameter you wish to view.

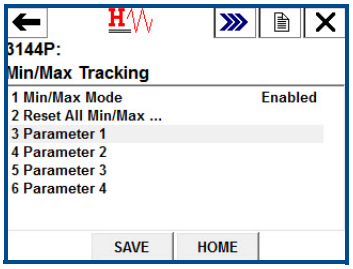

5. To reset all of the minimum and maximum recorded temperature values for all parameters, select **2 Reset All Min/Max**.

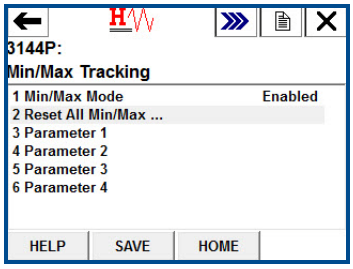

6. To reset the minimum and maximum recorded temperature values for a single parameter, select the parameter you wish to reset, and then select **4 Reset Parameter X**.

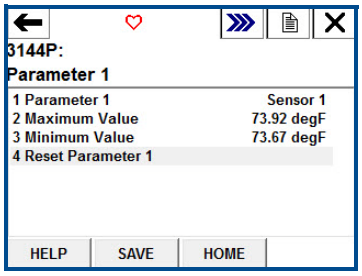

To disable Min/Max Tracking:

1. From the Home screen, select **2 Configure**.

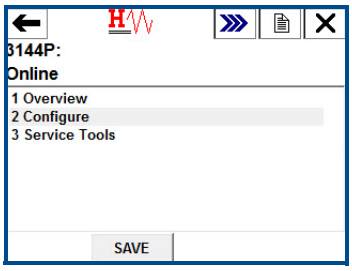

2. Select **1 Guided Setup**.

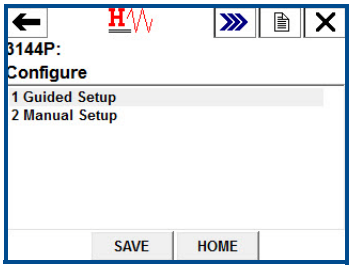

3. Select **7 Diagnostics Suite**.

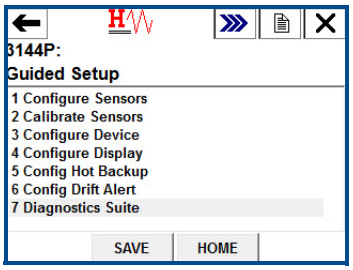

4. Select **2 Config Min/Max Tracking**.

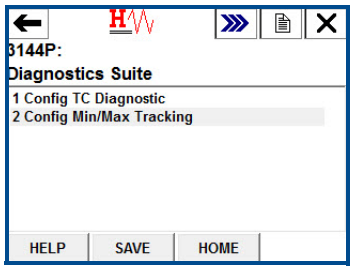

5. Select **2 Disable** to disable the Min/Max Tracking feature and press **ENTER**.

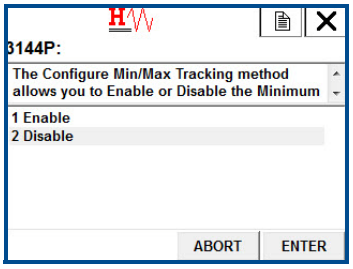

3.14 Calibration

Calibrating the transmitter increases the precision of the measurement system. The user may use one or more of a number of trim functions when calibrating. To understand the trim functions, it is necessary to realize that HART transmitters operate differently from analog transmitters. An important difference is that smart transmitters are factory-characterized; they are shipped with a standard sensor curve stored in the transmitter firmware. In operation, the transmitter uses this information to produce a process variable output, dependent on the sensor input. The trim functions allow the user to make adjustments to the factory-stored characterization curve by digitally altering the transmitter's interpretation of the sensor input.

Calibration of the 3144P may include:

- Sensor Input Trim: digitally alter the transmitter's interpretation of the input signal
- Transmitter-Sensor Matching: generates a special custom curve to match that specific sensor curve, as derived from the Callendar-Van Dusen constants
- Output Trim: calibrates the transmitter to a 4–20 mA reference scale
- Scaled Output Trim: calibrates the transmitter to a user-selectable reference scale

3.14.1 Calibration frequency

Calibration frequency can vary greatly depending on the application, performance requirements, and process conditions. Use the following procedure to determine calibration frequency that meets the needs of your application.

1. Determine the Required Performance
2. Calculate Total Probable Error
   a. Digital Accuracy = °C
   b. D/A Accuracy = (% of transmitter span) x (ambient temperature change) °C
   c. Digital Temp Effects = (°C per 1.0 °C change in ambient temperature) x (ambient temperature change)
   d. D/A Effects = (% of span per 1.0 °C) x (ambient temperature change) x (Process temperature range)
   e. Sensor Accuracy = °C
   f. $TPE = \sqrt{(DigitalAccuracy)^2 + (D/A)^2 + (DigitalTempEffects)^2 + (D/AEffects)^2 + (SensorAccuracy)^2}$
3. Calculate Stability per Month
   - (% per months) x (Process temperature range)
4. Calculate Calibration Frequency
   - $CalFreq = \frac{(RequiredPerformance - TPE)}{StabilityPerMonth}$

Example for Rosemount 3144P Pt 100 (α = 0.00385)

Reference temperature is 20 °F
Process Temperature change is 0-100 °C
Ambient Temperature is 30 °C

1. Required Performance: ± 0.35 °C
2. TPE = 0.102 °C
   a. Digital Accuracy = 0.10 °C
   b. D/A Accuracy = (0.02%) x (30 – 20) °C = ±0.002 °C
   c. Digital Temperature Effects = (0.0015 °C/ °C) x (30-20) °C = 0.015 °C
   d. D/A Effect = (0.001%/ °C) x (100 °C) x (30-20) °C = 00.01 °C
   e. Sensor Accuracy = ± 0.420 °C @ 400 °C for a class A RTD sensor with CVD constants
   f. TPE = $\sqrt{(0.102)^2 + 0.0022^2 + 0.0152^2 + 0.012^2 + 0.4202^2)}$ = 0.102 °C
3. Stability per Month: (0.25%/60 months) x (100 °C) = 0.00416 °C
4. Calibration Frequency: $\frac{0.35 - 0.102}{0.00416}$ = 60 Months (5 Years)

3.15 Trim the transmitter

The trim functions should not be confused with the rerange functions. Although the rerange command matches a sensor input to a 4–20 mA output—as in conventional calibration—it does not affect the transmitter's interpretation of the input.

One or more of the trim functions may be used when calibrating. The trim functions are as follows:

- Sensor Input Trim
- Transmitter-Sensor Matching
- Output Trim
- Output Scaled Trim

Figure 3-11. Trim

Application: Linear Offset

Solution: Single-Point Trim

Method:
1. Connect sensor to transmitter. Place sensor in bath between range points.
2. Enter known bath temperature using the Field Communicator.

Application: Linear Offset and Slope Correction

Solution: Two-Point Trim

Method:
1. Connect sensor to transmitter. Place sensor in bath at low range point.
2. Enter known bath temperature using the Field Communicator.
3. Repeat at high range point.

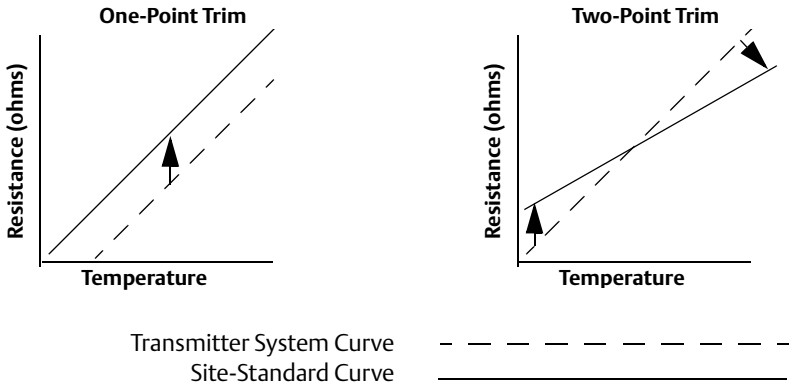

3.15.1 Sensor input trim

HART 5 Fast Keys	3, 4, 4
HART 7 Fast Keys	3, 4, 4

The *Sensor Trim* command allows for alteration of the transmitter's interpretation of the input signal as shown in Figure 3-11 on page 123. The sensor trim command trims, in engineering (°F, °C, °R, K) or raw (Ω, mV) units, the combined sensor and transmitter system to a site standard using a known temperature source. Sensor trim is suitable for validation procedures or for applications that require profiling the sensor and transmitter together.

Perform a sensor trim if the transmitter's digital value for the primary variable does not match the plant's standard calibration equipment. The sensor trim function calibrates the sensor to the transmitter in temperature units or raw units. Unless the site-standard input source is NIST-traceable, the trim functions will not maintain the NIST-traceability of your system.

The trim functions should not be confused with the rerange functions. Although the rerange command matches a sensor input to a 4–20 mA output—as in conventional calibration—it does not affect the transmitter's interpretation of the input.

Note
A warning will appear "Set the Control Loop to Manual" (see "Setting the loop to manual" on page 10.)

3.15.2 Active calibrator and EMF compensation

HART 5 Fast Keys	3, 4, 4, 4
HART 7 Fast Keys	3, 4, 4, 4

The transmitter operates with a pulsating sensor current to allow EMF compensation and detection of open sensor conditions. Because some calibration equipment requires a steady sensor current to function properly, the “Active Calibrator Mode” feature should be used when an active calibrator is connected. Enabling this mode temporarily sets the transmitter to provide steady sensor current unless two sensor inputs are configured. Disable this mode before putting the transmitter back into the process to set the transmitter back to pulsating current. “Active Calibrator Mode” is volatile and will automatically be disabled when a Master Reset is performed (through HART) or when the power is cycled.

EMF compensation allows the transmitter to provide sensor measurements that are unaffected by unwanted voltages, typically due to thermal EMFs in the equipment connected to the transmitter, or by some types of calibration equipment. If this equipment also requires steady sensor current, the transmitter must be set to “Active Calibrator Mode.” However, the steady current does not allow the transmitter to perform EMF compensation and as a result, a difference in readings between the active calibrator and actual sensor may exist.

If a reading difference is experienced and is greater than the plant’s accuracy specification allows, perform a sensor trim with “Active Calibrator Mode” disabled. In this case, an active calibrator capable of tolerating pulsating sensor current must be used or the actual sensors must be connected to the transmitter. When the field communicator or AMS Device Manager asks if an active calibrator is being used when the sensor trim routine is entered, select No to leave the “Active Calibrator Mode” disabled.

In temperature measurement loops using RTDs, small voltages, called EMFs, can be induced on the sensor wires, increasing the effective resistance and causing false temperature readings. For example, a 12 mV reading equates to 390F or 60ohm error for a PT100 385 RTD. The Emerson EMF Compensation detects these externally induced voltages and eliminates the erroneous voltages from the calculations performed by the transmitters. Externally induced voltages come from motors, calibration devices (dry block calibrator), etc.

How it works: Our transmitter provides RTD measurement updates at a rate of less than one second for a single sensor. This measurement update consists of a series of smaller measurement scans. A part of these smaller measurement scans is a check for EMF induced voltage, up to 12 mV, on the sensor loop. The transmitter is designed to compensate out the induced voltage up to 12 mV and provide a corrected temperature value. Beyond 12 mV, the transmitter will notify the user that “Excess EMF” is present and warn them of possible inaccuracies in the temperature measurement due to excessive induced voltage on the RTD sensor loop. In the case of excessive EMF in the transmitter, it is recommended that the user identify the external sources of electromagnetic interference and isolate them from the transmitter and RTD sensor wiring.

3.15.3 Transmitter-sensor matching

HART 7 Fast Keys	Sensor 1 - 2, 2, 1, 11
HART 7 Fast Keys	Sensor 1 - 2, 2, 2, 11

The 3144P accepts Callendar-Van Dusen constants from a calibrated RTD schedule and generates a special custom curve to match that specific sensor resistance vs. temperature performance. Matching the specific sensor curve with the transmitter significantly enhances the temperature measurement accuracy. See the comparison below:

System accuracy comparison at 150 °C using a PT 100 (α=0.00385) RTD with a span of 0 to 200 °C			
Standard RTD		Matched RTD	
3144P	±0.08 °C	3144P	±0.08 °C
Standard RTD	±1.05 °C	Matched RTD	±0.18 °C
Total System(1)	±1.05 °C	Total System(1)	±0.21 °C

(1) Calculated using root-summed-squared (RSS) statistical method.

Problem description: Depending on the process being measured, a certain amount of accuracy may be needed from the sensor.

Our solution: A more precise compensation for RTD inaccuracies is provided by Transmitter-Sensor Matching using the transmitter's factory programmed Callendar-Van Dusen (CVD) equation. This equation describes the relationship between resistance and temperature of platinum resistance thermometers (RTDs). The matching process allows the user to enter the four sensor specific Callendar-Van Dusen (CVD) constants into the transmitter. The transmitter uses these sensor-specific constants in solving the CVD equation to match the transmitter to that specific sensor thus providing outstanding accuracy. See comparison below:

System accuracy comparison at 150 °C using a PT 100 (α=0.00385) RTD with a span of 0 to 200 °C			
Standard RTD		Matched RTD	
3144P	±0.08 °C	3144P	±0.08 °C
Standard RTD	±1.05 °C	Matched RTD	±0.18 °C
Total System(1)	±1.05 °C	Total System(1)	±0.21 °C

(1) Calculated using root-summed-squared (RSS) statistical method.

Take away: "Transmitter-Sensor Matching customizes sensor curves to minimize sensor inaccuracy"

Note
In order to use this diagnostic, the RTD must be set as type **Cal VanDusen**.

Configure Transmitter Sensor Matching in guided setup

Note
The guided setup will take you through the complete sensor configuration. This document will guide you through the specific Transmitter Sensor Matching section.

1. From the Home Screen, select **2 Configure**.

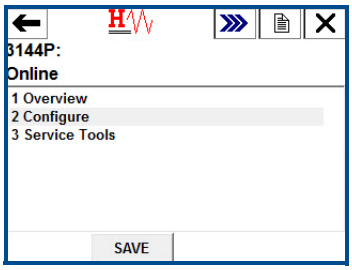

2. Select **1 Guided Setup.**

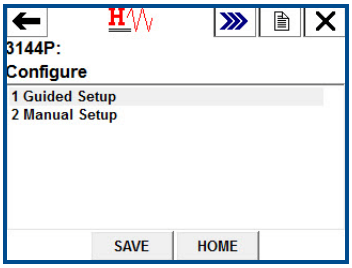

3. Select **1 Configure Sensors**.

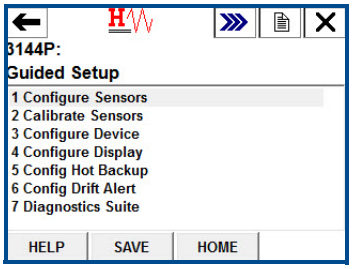

4. When prompted, choose **1 Configure Sensor 1**. If you are using dual RTDs, you may also choose **2 Configure Sensor 2**, or **3 Configure Both Sensors the Same**.

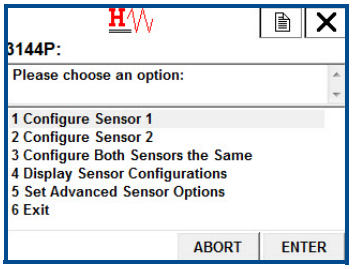

5. When prompted, choose the sensor type. This must be **Cal VanDusen** for this option. Press **Enter**.

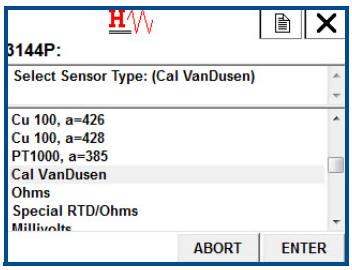

6. This will reset any Min/Max values tracking this sensor and any Min/Max values tracking Differential, Average, or First Good. Press **OK**.

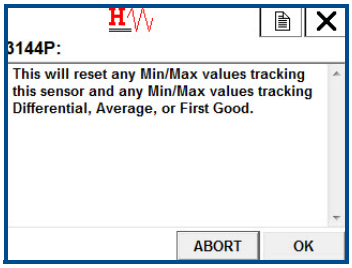

7. It will now display the current Callendar-Van Dusen coefficients for the sensor (Alpha, beta, Delta, R0, A, B, C). Press **OK**.

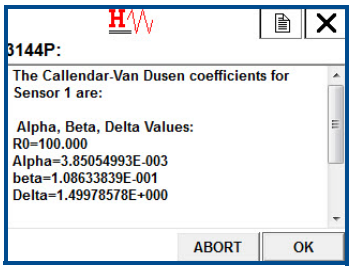

8. Select which set of CVD coefficients you would like to enter for that sensor. Choose between **1 R0, A, B, C**, and **2 R0, Alpha, Beta, Delta**.

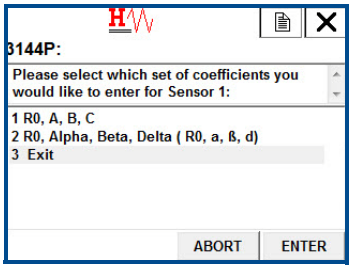

9. When prompted, enter in each constant and press **Enter**.

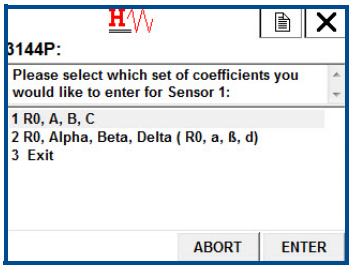

10. After you have completed this, it will display a summary screen with all the coefficient values needed for the CVD equation. Review this information and press **OK**.

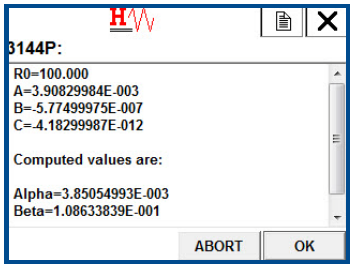

11. Finish the remaining steps of the sensor configuration according to the Communicator. When you are satisfied with your selection, choose **6 Exit** from the main screen, or select **Abort**.

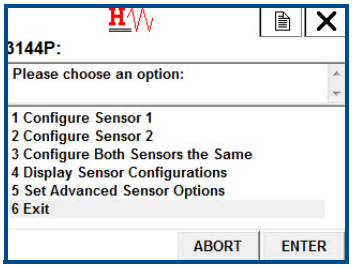

Configure Transmitter Sensor Matching in manual setup

1. From the Home Screen, select **2 Configure**.

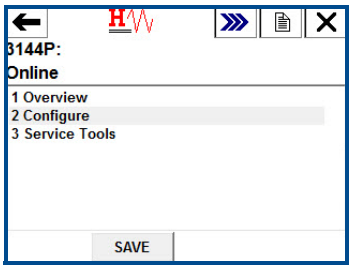

2. Select **2 Manual Setup.**

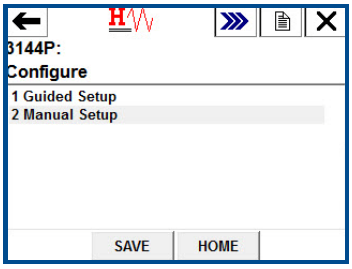

3. Select the sensor you would like to configure.

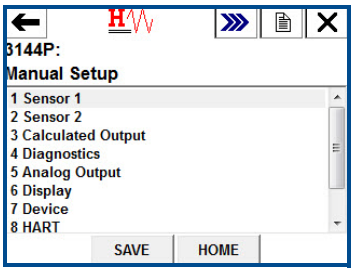

4. Select **9 Sensor Matching-CVD**.

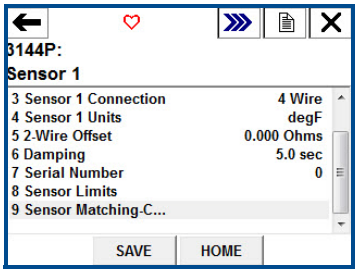

5. The screen would display a summary screen of the coefficients **R0, A, B,** and **C**. Select **5 Set CVD Coefficients** to set these coefficients.

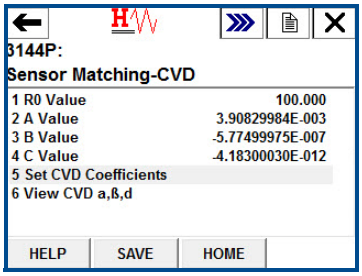

6. When prompted, select which set of coefficients you would like to enter for that sensor. Choose between **1 R0, A, B, C**, and **2 R0, Alpha, Beta, Delta**.

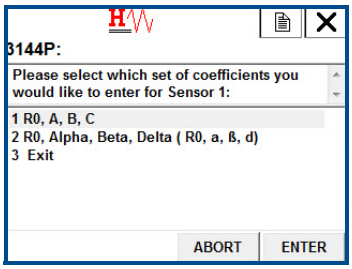

7. When prompted, enter the desired values for each coefficient.

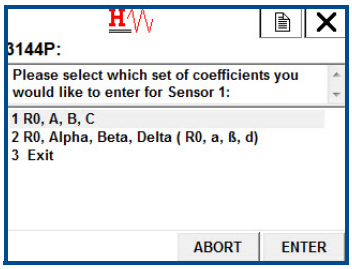

8. When you are done entering in these coefficients, another summary screen will appear. Review this information, and when you are satisfied, press **OK**.

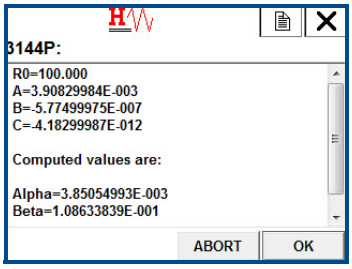

9. The method is complete, select **3 Exit** to exit the method if you are satisfied.

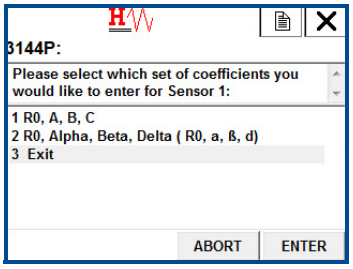

View the set CVD coefficients

1. From the Home Screen, select **2 Configure**.

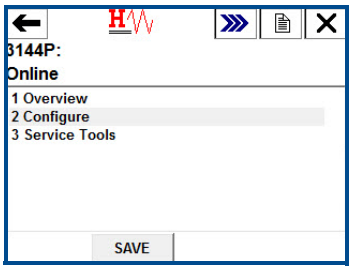

2. Select **2 Manual Setup.**

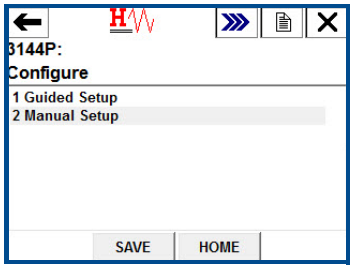

3. Select the sensor you would like to configure.

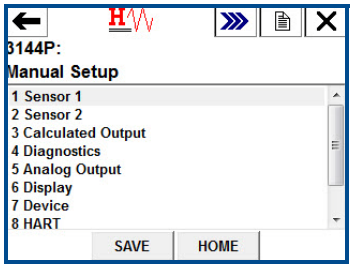

4. Select **9 Sensor Matching-CVD**.

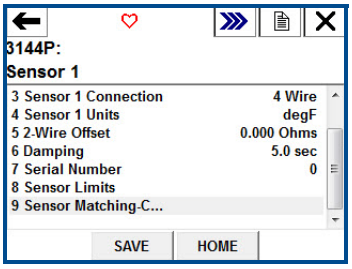

5. The screen would display a summary screen of the coefficients **R0, A, B**, and **C**. Select **6 View CVD** α, β, δ to view those.

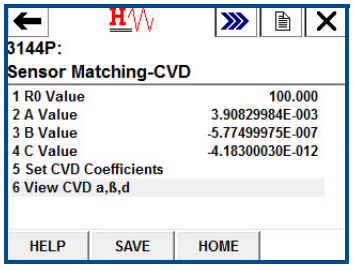

The following input constants, included with specially-ordered Rosemount temperature sensors, are required:

R_0 = Resistance at Ice Point
Alpha = Sensor Specific Constant
Beta = Sensor Specific Constant
Delta = Sensor Specific Constant
Other sensor may have "A, B, or C" values for constants.

Note
When the Transmitter-Sensor Matching is disabled, the transmitter reverts to factory trim input. Make certain the transmitter engineering units default correctly before placing the transmitter into service.

3.15.4 D/A output trim or scaled output trim

Perform a D/A output trim (scaled output trim) if the digital value for the primary variable matches the plant standard, but the transmitter's analog output does not match the digital value on the output device (such as the ampmeter). The output trim function calibrates the transmitter analog output to a 4–20 mA reference scale; the scaled output trim function calibrates to a user-selectable reference scale. To determine the need for an output trim or a scaled output trim, perform a loop test (see "Loop test" on page 98).

Figure 3-12. Dynamics of Smart Temperature Measurement

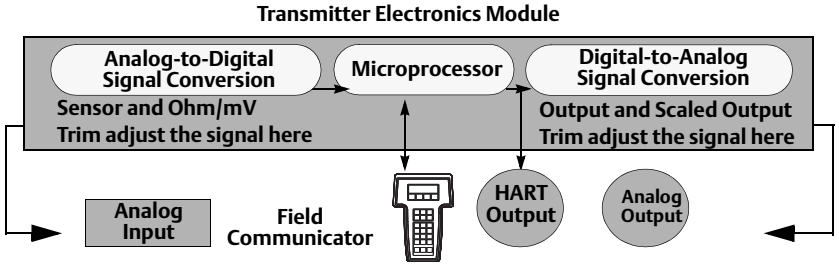

3.15.5 Output trim

HART 5 Fast Keys	3, 4, 5, 1
HART 7 Fast Keys	3, 4, 5, 1

The *D/A Trim* command allows the user to alter the transmitter's conversion of the input signal to a 4–20 mA output (see Figure 3-12 on page 132). Calibrate the analog output signal at regular intervals to maintain measurement precision. To perform a digital-to-analog trim, perform the following procedure with the Traditional Fast Key sequence.

3.15.6 Scaled output trim

HART 5 Fast Keys	3, 4, 5, 2
HART 7 Fast Keys	3, 4, 5, 2

The *Scaled D/A Trim* command matches the 4 and 20 mA points to a user-selectable reference scale other than 4 and 20 mA (2–10 volts, for example). To perform a scaled D/A trim, connect an accurate reference meter to the transmitter and trim the output signal to scale as outlined in the Output trim procedure.

3.16 Troubleshooting

3.16.1 Overview

If a malfunction is suspected despite the absence of a diagnostics message on the field communicator display, follow the procedures described in Table 3-2 to verify that transmitter hardware and process connections are in good working order. Under each of four major symptoms, specific suggestions are offered for solving problems. Always deal with the most likely and easiest-to-check conditions first.

Advanced troubleshooting information for use with field communicators is available in Table 3-3 on page 134.

Table 3-2. HART / 4–20 mA Basic Troubleshooting

Symptom	Potential source	Corrective action
Transmitter Does Not Communicate with Field Communicator	Loop Wiring	• Check the revision level of the transmitter device descriptors (DDs) stored in your communicator. The communicator should report Dev v4, DD v1 (improved), or reference "Field communicator" on page 30 for previous versions. Contact Emerson Process Management Customer Central for assistance. • Check for a minimum of 250 ohms resistance between the power supply and Field Communicator connection. • Check for adequate voltage to the transmitter. If a Field Communicator is connected and 250 ohms resistance is properly in the loop, then the transmitter requires a minimum of 12.0 V at the terminals to operate (over entire 3.5 to 23.0 mA operating range), and 12.5 V minimum to communicate digitally. • Check for intermittent shorts, open circuits, and multiple grounds.
High Output	Sensor Input Failure or Connection	• Connect a Field Communicator and enter the transmitter test mode to isolate a sensor failure. • Check for a sensor open circuit. • Check if the process variable is out of range.
	Loop Wiring	• Check for dirty or defective terminals, interconnecting pins, or receptacles.
	Power Supply	• Check the output voltage of the power supply at the transmitter terminals. It should be 12.0 to 42.4 Vdc (over entire 3.5 to 23.0 mA operating range).
	Electronics Module	• Connect a Field Communicator and enter the transmitter test mode to isolate module failure. • Connect a Field Communicator and check the sensor limits to ensure calibration adjustments are within the sensor range.

Table 3-2. HART / 4–20 mA Basic Troubleshooting

Symptom	Potential source	Corrective action
Erratic Output	Loop wiring	• Check for adequate voltage to the transmitter. It should be 12.0 to 42.4 Vdc at the transmitter terminals (over entire 3.5 to 23.0 mA operating range). • Check for intermittent shorts, open circuits, and multiple grounds. • Connect a Field Communicator and enter the loop test mode to generate signals of 4 mA, 20 mA, and user-selected values.
	Electronics Module	• Connect a Field Communicator and enter the transmitter test mode to isolate module failure.
Low Output or No Output	Sensor Element	• Connect a Field Communicator and enter the transmitter test mode to isolate a sensor failure. • Check if the process variable is out of range.
	Loop Wiring	• Check for adequate voltage to the transmitter. It should be 12.0 to 42.4 Vdc (over entire 3.5 to 23.0 mA operating range). • Check for shorts and multiple grounds. • Check for proper polarity at the signal terminal. • Check the loop impedance. • Connect a Field Communicator and enter the loop test mode. • Check wire insulation to detect possible shorts to ground.
	Electronics Module	• Connect a Field Communicator and check the sensor limits to ensure calibration adjustments are within the sensor range. • Connect a Field Communicator and enter the transmitter test mode to isolate an electronic module failure.

Table 3-3. Field Communicator Error Warning Descriptions – HART[(1)]

Message	Description
Add item for ALL device types or only for this ONE device type	Asks the user whether the hot key item being added should be added for all device types or only for the type of device that is connected.
Command not implemented	The connected device does not support this function.
Communication error	Either a device sends back a response indicating that the message it received was unintelligible, or the Field Communicator cannot understand the response from the device.
Configuration memory not compatible with connected device	The configuration stored in memory is incompatible with the device to which a transfer has been requested.
Device busy	The connected device is busy performing another task.
Device disconnected	Device fails to respond to a command.
Device write protected	Device is in write-protect mode. Data can not be written.
Device write protected. Do you still want to shut off?	Device is in write-protect mode. Press YES to turn the Field Communicator off and lose the unsent data.
Display value of variable on hot key menu?	Asks whether the value of the variable should be displayed adjacent to its label on the hot key menu if the item being added to the hot key menu is a variable.
Download data from configuration memory to device	Prompts user to press SEND softkey to initiate a memory to device transfer.
EEPROM Error	Reset the Device. If the error persists, the device has failed. Contact a Rosemount Service Center.
EEPROM Write Error	Reset the Device. If the error persists, the device has failed. Contact a Rosemount Service Center.

Table 3-3. Field Communicator Error Warning Descriptions – HART[(1)]

Message	Description
Exceed field width	Indicates that the field width for the current arithmetic variable exceeds the device-specified description edit format.
Exceed precision	Indicates that the precision for the current arithmetic variable exceeds the device-specified description edit format.
Ignore next 50 occurrences of status?	Asked after displaying device status. Softkey answer determines whether next 50 occurrences of device status will be ignored or displayed.
Illegal character	An invalid character for the variable type was entered.
Illegal date	The day portion of the date is invalid.
Illegal month	The month portion of the date is invalid.
Illegal year	The year portion of the date is invalid.
Incomplete exponent	The exponent of a scientific notation floating point variable is incomplete.
Incomplete field	The value entered is not complete for the variable type.
Looking for a device	Polling for multidropped devices at addresses 1–15.
Mark as read only variable on hotkey menu?	Asks whether the user should be allowed to edit the variable from the hotkey menu if the item being added to the hotkey menu is a variable.
No device configuration in configuration memory	There is no configuration saved in memory available to re-configure off-line or transfer to a device.
No device found	Poll of address zero fails to find a device, or poll of all addresses fails to find a device if auto-poll is enabled.
No hotkey menu available for this device.	There is no menu named “hotkey” defined in the device description for this device.
No offline devices available	There are no device descriptions available to be used to configure a device offline.
No simulation devices available	There are no device descriptions available to simulate a device.
No UPLOAD_VARIABLES in ddl for this device	There is no menu named “upload_variables” defined in the device description for this device. This menu is required for offline configuration.
No valid items	The selected menu or edit display contains no valid items.
OFF KEY DISABLED	Appears when the user attempts to turn the Field Communicator off before sending modified data or before completing a method.
Online device disconnected with unsent data. RETRY or OK to lose data.	There is unsent data for a previously connected device. Press RETRY to send data, or press OK to disconnect and lose unsent data.
Out of memory for hotkey configuration. Delete unnecessary items.	There is no more memory available to store additional hotkey items. Unnecessary items should be deleted to make space available.
Overwrite existing configuration memory	Requests permission to overwrite existing configuration either by a device-to-memory transfer or by an offline configuration. User answers using the softkeys.
Press OK	Press the OK softkey. This message usually appears after an error message from the application or as a result of HART communications.
Restore device value?	The edited value that was sent to a device was not properly implemented. Restoring the device value returns the variable to its original value.

Table 3-3. Field Communicator Error Warning Descriptions – HART(1)

Message	Description
Save data from device to configuration memory	Prompts user to press SAVE softkey to initiate a device-to-memory transfer.
Saving data to configuration memory	Data is being transferred from a device to configuration memory.
Sending data to device	Data is being transferred from configuration memory to a device.
There are write only variables which have not been edited. Please edit them.	There are write-only variables that have not been set by the user. These variables should be set or invalid values may be sent to the device.
There is unsent data. Send it before shutting off?	Press YES to send unsent data and turn the Field Communicator off. Press NO to turn the Field Communicator off and lose the unsent data.
Too few data bytes received	Command returns fewer data bytes than expected as determined by the device description.
Transmitter fault	Device returns a command response indicating a fault with the connected device.
Units for <variable label> has changed. Unit must be sent before editing, or invalid data will be sent.	The engineering units for this variable have been edited. Send engineering units to the device before editing this variable.
Unsent data to online device. SEND or LOSE data	There is unsent data for a previously connected device which must be sent or thrown away before connecting to another device.
Use up/down arrows to change contrast. Press DONE when done.	Gives direction to change the contrast of the Field Communicator display.
Value out of range	The user-entered value is either not within the range for the given type and size of variable or not within the min/max specified by the device.
<message> occurred reading/writing <variable label>	Either a read/write command indicates too few data bytes received, transmitter fault, invalid response code, invalid response command, invalid reply data field, or failed pre- or post-read method; or a response code of any class other than SUCCESS is returned reading a particular variable.
<variable label> has an unknown value. Unit must be sent before editing, or invalid data will be sent.	A variable related to this variable has been edited. Send related variable to the device before editing this variable.

(1) Variable parameters within the text of a message are indicated with <variable parameter>. Reference to the name of another message is identified by [another message].

3.16.2 LCD display

The LCD displays abbreviated diagnostic messages for troubleshooting the transmitter. To accommodate two word messages, the display alternates between the first and second word. Some diagnostic messages have a higher priority than others, so messages appear according to priority, with normal operating messages appearing last. Messages on the *Process Variable* line refer to general device conditions, while messages on the *Process Variable Unit* line refer to specific causes for these conditions. A description of each diagnostic message follows.

Table 3-4. LCD Display Error Warning Descriptions

Message	Description
[BLANK]	If the meter does not appear to function, make sure the transmitter is configured for the meter option you desire. The meter will not function if the LCD Display option is set to Not Used.
FAIL -or- HDWR FAIL	This message indicates one of several conditions including: The transmitter has experienced an electronics module failure. The transmitter self-test has failed. If diagnostics indicate a failure of the electronics module, replace the electronics module with a new one. Contact the nearest Emerson Process Management Field Service Center if necessary.
SNSR 1 FAIL -or- SNSR 2 FAIL	The transmitter has detected an open or shorted sensor condition. The sensor(s) might be disconnected, connected improperly, or malfunctioning. Check the sensor connections and sensor continuity.
SNSR 1 SAT -or- SNSR 2 SAT	The temperature sensed by the transmitter exceeds the sensor limits for this particular sensor type.
HOUSG SAT	The transmitter operating temperature limits (–40 to 185 °F (40 to 85 °C)) have been exceeded.
LOOP FIXED	During a loop test or a 4–20 mA output trim, the analog output defaults to a fixed value. The *Process Variable* line of the display alternates between the amount of current selected in milliamperes and “WARN.” The *Process Variable Unit* line toggles between “LOOP,” “FIXED,” and the amount of current selected in milliamperes.
OFLOW	The location of the decimal point, as configured in the meter setup, is not compatible with the value to be displayed by the meter. For example, if the meter is measuring a process temperature greater than 9.9999 degrees, and the meter decimal point is set to 4 digit precision, the meter will display an “OFLOW” message because it is only capable of displaying a maximum value of 9.9999 when set to 4 digit precision.
HOT BU	Hot Backup is enabled and Sensor 1 has failed. This message is displayed on the *Process Variable* line and is always accompanied by a more descriptive message on the *Process Variable Unit* line. In the case of a Sensor 1 failure with Hot Backup enabled, for example, the *Process Variable* line displays “HOT BU,” and the *Process Variable Unit* line alternates between “SNSR 1” and “FAIL.”
WARN DRIFT ALERT	Drift Alert warning is enabled and the difference between Sensor 1 and Sensor 2 has exceeded the user-specified limit. One of the sensors may be malfunctioning. The *Process Variable* line displays “WARN” and the *Process Variable Unit* line alternates between “DRIFT” and “ALERT.”
ALARM DRIFT ALERT	The analog output is in alarm. Drift Alert alarm is enabled and the difference between Sensor 1 and Sensor 2 has exceeded the user-specified limit. The transmitter is still operating, but one of the sensors may be malfunctioning. The *Process Variable* line displays “ALARM” and the *Process Variable Unit* line alternates between “DRIFT” and “ALERT.”
ALARM	The digital and analog outputs are in alarm. Possible causes of this condition include, but are not limited to, an electronics failure or an open sensor. This message is displayed on the *Process Variable* line and is always accompanied by a more descriptive message on the *Process Variable Unit* line. In the case of a Sensor 1 failure, for example, the *Process Variable* line displays “ALARM,” and the *Process Variable Unit* line alternates between “SNSR 1” and “FAIL.”
WARN	The transmitter is still operating, but something is not correct. Possible causes of this condition include, but are not limited to, an out-of-range sensor, a fixed loop, or an open sensor condition. In the case of a Sensor 2 failure with Hot Backup enabled, the *Process Variable* line displays “WARN,” and the *Process Variable Unit* line alternates between “SNSR 2” and “RANGE.”

3.16.3 Spare parts

This spare part is available for the 3144P Transmitter.

Description	Part number
Replacement electronics module assembly	03144-3111-0001

Section 4 FOUNDATION™ fieldbus configuration

Overview . . . . . page 139
Safety messages . . . . . page 139
General block information . . . . . page 140
Foundation fieldbus function blocks . . . . . page 142
Resource block . . . . . page 144
Sensor transducer block . . . . . page 150
LCD display transducer block . . . . . page 152
Analog Input (AI) . . . . . page 155
Operation . . . . . page 162
Troubleshooting guides . . . . . page 168

4.1 Overview

This section provides information on configuring, troubleshooting, operating, and maintaining the Rosemount® 3144P transmitter using FOUNDATION fieldbus protocol. There are many common attributes with the HART® transmitter, and if the information cannot be found in this section, refer to Section 3: HART® commissioning.

4.2 Safety messages

Instructions and procedures in this section may require special precautions to ensure the safety of the personnel performing the operations. Information that potentially raises safety issues is indicated by a warning symbol (⚠). Please refer to the following safety messages before performing an operation preceded by this symbol.

⚠ WARNING

Failure to follow these installation guidelines could result in death or serious injury.

- Make sure only qualified personnel perform the installation.

Explosions could result in death or serious injury.

- Do not remove the connection head cover in explosive atmospheres when the circuit is live.
- Before powering a FOUNDATION fieldbus segment in an explosive atmosphere, make sure the instruments in the loop are installed in accordance with intrinsically safe or non-incendive field wiring practices.
- Verify that the operating atmosphere of the transmitter is consistent with the appropriate hazardous locations certifications.
- All connection head covers must be fully engaged to meet explosion-proof requirements.

Process leaks could result in death or serious injury.

- Do not remove the thermowell while in operation.
- Install and tighten thermowells and sensors before applying pressure.

Electrical shock could cause death or serious injury.

- Use extreme caution when making contact with the leads and terminals.

4.3 General block information

4.3.1 Device description

Before configuring the device, ensure the host has the appropriate Device Description file revision. The device descriptor can be found on the FOUNDATION fieldbus page on www.rosemount.com. As of February 2011, the current revision of the Rosemount 3144P with FOUNDATION fieldbus protocol is device revision 3.

4.3.2 Node address

The transmitter is shipped at a temporary (248) address, to enable FOUNDATION fieldbus host systems to automatically recognize the device and move it to a permanent address.

4.3.3 Modes

The resource, transducer, and all function blocks in the device have modes of operation that govern the operation of the block. Every block supports both automatic (AUTO) and out of service (OOS) modes, and other modes may also be supported.

⚠ Changing modes

To change the operating mode, set the MODE_BLK.TARGET to the desired mode. After a short delay, the parameter MODE_BLOCK.ACTUAL should reflect the mode change, if the block is operating properly.

Permitted modes

It is possible to prevent unauthorized changes to the operating mode of a block by configuring MODE_BLOCK.PERMITTED to allow only the desired operating modes. It is recommended that OOS always be selected as one of the permitted modes.

Types of modes

For the procedures described in this manual, it is helpful to understand the following modes:

AUTO

The functions performed by the block will execute. If the block has any outputs, these will continue to update. This is typically the normal operating mode.

Out of service (OOS)

The functions performed by the block will not execute. If the block has any outputs, these will typically not update and the status of any values passed to downstream blocks will be "BAD". To make changes to the configuration of the block, change the mode of the block to OOS, and when the changes are complete, change the mode back to AUTO.

MAN

In this mode, variables that are passed out of the block can be manually set for testing or override purposes.

Other types of modes

Other types of modes are Cas, RCas, ROut, IMan, and LOW. Some of these may be supported by different function blocks in the 3144P. For more information, see the Function Block manual (Document No. 00809-0100-4783).

Note

When an upstream block is set to OOS, it will impact the output status of all downstream blocks. The figure below depicts the hierarchy of blocks:

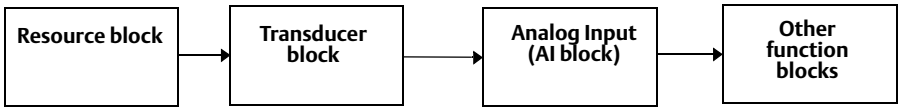

4.3.4 Link Active Scheduler

The 3144P can be designated to act as the backup Link Active Scheduler (LAS) in the event that the designated LAS is disconnected from the segment. As the backup LAS, the 3144P takes over the management of communications until the host is restored.

The host system provides a configuration tool specifically designed to designate a particular device as a backup LAS. Otherwise, this can be configured manually as follows:

⚠ 1. Access the Management Information Base (MIB) for the 3144P.
To activate the LAS capability, enter 0x02 to the BOOT_OPERAT_FUNCTIONAL_CLASS object (Index 605). To deactivate, enter 0x01.

2. Restart the device.

4.3.5 Capabilities

Virtual Communication Relationship (VCRs)

There are 20 VCRs, where one is permanent and 19 are fully configurable by the host system. Also, thirty link objects are available.

Table 4-1. Network Parameters

Network parameter	Value
Slot Time	8
Maximum Response Delay	2
Maximum Inactivity to Claim LAS Delay	32
Minimum Inter DLPDU Delay	8
Time Sync class	4 (1 ms)
Maximum Scheduling Overhead	10
Per CLPDU PhL Overhead	4
Maximum Inter-channel Signal Skew	0
Required Number of Post-transmission-gab-ext Units	0
Required Number of Preamble-extension Units	1

Block execution times

Block	Execution time
Resource	–
Transducer	–
LCD display Block	–
Advanced Diagnostics	–
Analog Input 1, 2, 3	60 ms
PID 1 and 2 with Autotune	90 ms
Input Selector	65 ms
Signal Characterizer	60 ms
Arithmetic	60 ms
Output Splitter	60 ms

4.4 FOUNDATION fieldbus function blocks

For reference information on the resource, sensor transducer, AI, LCD display transducer blocks refer to "Function blocks" on page 201. Reference information on the PID block can be found in the function block manual (Document No. 00809-0100-4783).

Resource block (index number 1000)

The resource function block (RB) contains diagnostic, hardware, and electronics information. There are no linkable inputs or outputs to the resource block.

Sensor transducer block (index number 1100)

The Sensor Transducer Function Block (STB) temperature measurement data, includes sensor and terminal (body) temperature. The STB also includes information about sensor type, engineering units, linearization, reranging, damping, temperature compensation, and diagnostics. Transmitter Revision 3 and above also contain Hot Backup™ functionality in the STB.

LCD display transducer block (index number 1200)

The LCD display transducer block is used to configure the LCD display.

Analog input block (index number 1400, 1500, 1600, and 1700)

The Analog Input Function Block (AI) processes the measurements from the sensor and makes them available to other function blocks. The output value from the AI block is in engineering units and contains a status indicating the quality of the measurement. The AI block is used for scaling functionality.

PID block (index number 1800 and 1900)

The PID function block combines all of the necessary logic to perform proportional/integral/derivative (PID) control. The block supports mode control, signal scaling and limiting, feed forward control, override tracking, alarm limit detection, and signal status propagation.

The block supports two forms of the PID equation: Standard and Series. Choose the appropriate equation using the MATHFORM parameter. The Standard ISA PID equation is the default selection and autotune.

Input selector (index number 2000)

The signal selector block provides selection of up to four inputs and generates an output based on the configured action. This block normally receives its inputs from AI blocks. The block performs maximum, minimum, middle, average, and 'first good' signal selection.

Output splitter (index number OSPL 2300)

The output splitter block provides the capability to drive two control outputs from a single input. Each output is a linear function of some portion of the input.

Arithmetic (index number 2200)

This block is designed to permit simple use of popular measurement math functions. The user does not have to know how to write equations. The math algorithm is selected by name, chosen by the user for the function to be done.

Signal characterizer (index number 2100)

The signal characterizer block has two sections, each with an output that is a non-linear function of the respective input. The non-linear function is determined by a single look-up table with 21 arbitrary x-y pairs. The status of an input is copied to the corresponding output, so the block may be used in the control or process signal path.

4.5 Resource block

4.5.1 Features and Features_Sel

The FEATURES and FEATURE_SEL parameters determine optional behavior of the 3144P.

FEATURES

The FEATURES parameter is read only and defines which features are supported by the 3144P. The list of FEATURES the 3144P supports is listed below.

UNICODE

All configurable string variables in the 3144P, except tag names, are octet strings. Either ASCII or Unicode may be used. If the configuration device is generating Unicode octet strings, you must set the Unicode option bit.

REPORTS

The 3144P supports alert reports. To use this feature, the Reports option bit must be set in the features bit string. If it is not set, the host must poll for alerts.

SOFT W LOCK and HARD W LOCK

Inputs to the security and write lock functions include the hardware security switch, the hardware and software write lock bits of the FEATURE_SEL parameter, the WRITE_LOCK parameter, and the DEFINE_WRITE_LOCK parameter.

The WRITE_LOCK parameter prevents modification of parameters within the device except to clear the WRITE_LOCK parameter. The block will function normally updating inputs and outputs and executing algorithms while WRITE_LOCK is in use. When the WRITE_LOCK condition is cleared, a WRITE_ALM alert is generated with a priority that corresponds to the WRITE_PRI parameter.

The FEATURE_SEL parameter enables the user to select a hardware or software write lock or no write lock capability. To use the hardware security function, enable the HW_SEL bit in the FEATURE_SEL parameter. When this bit has been enabled, the WRITE_LOCK parameter becomes read only and reflects the state of the hardware switch. In order to enable the software write lock, the SW_SEL bit must be set in the FEATURE_SEL parameter. Once this bit is set, the WRITE_LOCK parameter may be set to “Locked” or “Not Locked.” Once the WRITE_LOCK parameter is set to “Locked” by either the software or the hardware lock, all user requested writes as determined by the DEFINE_WRITE_LOCK parameter will be rejected.

The DEFINE_WRITE_LOCK parameter allows the user to configure whether the write lock functions (both software and hardware) control writing to all blocks, or only to the resource and transducer blocks. Internally updated data such as process variables and diagnostics will not be restricted by the security switch.

The following table displays all possible configurations of the WRITE_LOCK parameter.

FEATURE_SEL HW_SEL bit	FEATURE_SEL SW_SEL bit	SECURITY SWITCH	WRITE_LOCK	WRITE_LOCK Read/Write	DEFINE_WRITE _LOCK	Write access to blocks
0 (off)	0 (off)	N/A	1 (unlocked)	Read only	N/A	All
0 (off)	1 (on)	N/A	1 (unlocked)	Read/Write	N/A	All
0 (off)	1 (on)	N/A	2 (locked)	Read/Write	Physical	Function Blocks only
0 (off)	1 (on)	N/A	2 (locked)	Read/Write	Everything	None

FEATURE_SEL HW_SEL bit	FEATURE_SEL SW_SEL bit	SECURITY SWITCH	WRITE_LOCK	WRITE_LOCK Read/Write	DEFINE_WRITE _LOCK	Write access to blocks
1 (on)	0 (off)(1)	0 (unlocked)	1 (unlocked)	Read only	N/A	All
1 (on)	0 (off)	1 (locked)	2 (locked)	Read only	Physical	Function Blocks only
1 (on)	0 (off)	1 (locked)	2 (locked)	Read only	Everything	None

(1) The hardware and software write lock select bits are mutually exclusive and the hardware select has the highest priority. When the HW_SEL bit is set to 1 (on), the SW_SEL bit is automatically set to 0 (off) and is read only.

FEATURES_SEL

FEATURES_SEL turns on any of the supported features. The default setting of the 3144P does not select any of these features. Choose one of the supported features, if any.

MAX_NOTIFY

The MAX_NOTIFY parameter value is the maximum number of alert reports that the resource can send without getting a confirmation, corresponding to the amount of buffer space available for alert messages. The number can be set lower to control alert flooding by adjusting the LIM_NOTIFY parameter value. If LIM_NOTIFY is set to zero, then no alerts are reported.

4.5.2 PlantWeb™ alerts

The alerts and recommended actions should be used in conjunction with "Operation" on page 162.

The Resource Block acts as a coordinator for PlantWeb alerts. There will be three alarm parameters (FAILED_ALARM, MAINT_ALARM, and ADVISE_ALARM) which contain information regarding some of the device errors detected by the transmitter software. There will be a RECOMMENDED_ACTION parameter used to display the recommended action text for the highest priority alarm and a HEALTH_INDEX parameters (0 - 100) indicating the overall health of the transmitter. FAILED_ALARM has the highest priority, followed by MAINT_ALARM, and ADVISE_ALARM is the lowest priority.

FAILED_ALARMS

A failure alarm indicates the device or some part of the device is non-operational, and the device is in need of repair. There are five parameters associated with FAILED_ALARMS.

FAILED_ENABLED

This parameter contains a list of failures that makes the device non-operational and causes an alert to be sent. Below is a list of the failures with the highest priority first.

1. Electronics
2. NV Memory
3. HW / SW Incompatible
4. Primary Value
5. Secondary Value

FAILED_MASK

This parameter masks any of the failed conditions listed in FAILED_ENABLED. A bit on means the condition is masked from alarming and will not be reported.

FAILED_PRI
Designates the alerting priority of the FAILED_ALM, see "Alarm priority" on page 159. The default is 0, and the recommended values are between 8 and 15.

FAILED_ACTIVE
This parameter displays the active alarms. Only the highest priority alarm will be displayed. This priority is not the same as the FAILED_PRI parameter described above, but is hard coded within the device and is not user configurable.

FAILED_ALM
Alarm indicating a failure within a device which makes the device non-operational.

MAINT_ALARMS
A maintenance alarm indicates the device, or some part of the device, needs maintenance soon. If the condition is ignored, the device will eventually fail. There are five parameters associated with MAINT_ALARMS:

MAINT_ENABLED
The MAINT_ENABLED parameter contains a list of conditions indicating the device, or some part of the device, needs maintenance soon.

Below is a list of the conditions, with the highest priority first.

1. Primary Value Degraded
2. Secondary Value Degraded
3. Configuration Error
4. Calibration Error

MAINT_MASK
The MAINT_MASK parameter masks any of the failed conditions listed in MAINT_ENABLED. A bit on means that the condition is masked out from alarming and will not be reported.

MAINT_PRI
MAINT_PRI designates the alarming priority of the MAINT_ALM, see "Process alarms" on page 159. The default is 0 and the recommended values is 3 to 7.

MAINT_ACTIVE
The MAINT_ACTIVE parameter displays which of the alarms is active. Only the condition with the highest priority will be displayed. This priority is not the same as the MAINT_PRI parameter described above. This priority is hard coded within the device and is not user configurable.

MAINT_ALM
An alarm indicating the device needs maintenance soon. If the condition is ignored, the device will eventually fail.

Advisory alarms
An advisory alarm indicates informative conditions that do not have a direct impact on the device's primary functions. There are five parameters associated with ADVISE_ALARMS. They are described below.

ADVISE_ENABLED

The ADVISE_ENABLED parameter contains a list of informative conditions that do not have a direct impact on the device's primary functions. Below is a list of the advisories with the highest priority first.

1. NV Writes Deferred
2. SPM Process Anomaly detected

ADVISE_MASK

The ADVISE_MASK parameter will mask any of the failed conditions listed in ADVISE_ENABLED. A bit on means the condition is masked from alarming and will not be reported.

ADVISE_PRI

ADVISE_PRI designates the alarming priority of the ADVISE_ALM, see "Process alarms" on page 159. The default is 0, and the recommended values are 1 or 2.

ADVISE_ACTIVE

The ADVISE_ACTIVE parameter displays the active advisories. Only the advisory with the highest priority is displayed. This priority is not the same as the ADVISE_PRI parameter described above, but is hard coded within the device and is not user configurable.

ADVISE_ALM

ADVISE_ALM indicates advisory alarms. These conditions do not have a direct impact on the process or device integrity.

4.5.3 Recommended actions for PlantWeb alerts

RECOMMENDED_ACTION

The RECOMMENDED_ACTION parameter displays a text string that gives a recommended course of action based on the type and specific event of the PlantWeb alerts are active.

Table 4-2. RB.RECOMMENDED_ACTION

	Alarm type	Failed/maint/advise active event	Recommended action text string
PlantWeb alerts	None	None	No action required
	Advisory	NV Writes Deferred	Non-volatile writes have been deferred, leave the device powered until the advisory goes away
	Maintenance	Configuration Error	Re-write the Sensor Configuration
		Primary Value Degraded	Confirm the operating range of the applied sensor and/or verify the sensor connection and device environment
		Calibration Error	Retrim the device
		Secondary Value Degraded	Verify the ambient temperature is within operating limits
	Failed	Electronics Failure	Replace the Device
		HW / SW Incompatible	Verify the Hardware Revision is compatible with the Software Revision
		NV Memory Failure	Reset the device then download the Device Configuration.
		Primary Value Failure	Verify the instrument process is within the Sensor range and/or confirm sensor configuration and wiring.
		Secondary Value Failure	Verify sensor range and/or confirm sensor configuration and wiring
	Diagnostic Error	Sensor Drift Alert or Hot BU active	Confirm the operating range of the supplied sensor and/or verify the sensor connection and device environment
		Primary Value Degraded	Confirm the operating range of the supplied sensor and/or verify the sensor connection and device environment

4.5.4 Recommended actions for field diagnostics per NE107

Alarm type	Active event name	Recommended Action text string
Maintenance Required	Diagnostic Error	Device sensor diagnostic has been triggered
	Process Anomoly Detected	N/A
Out of Specification	Configuration Error	Re-write the Sensor Configuration
	Primary Value Degraded	Confirm the operating range of the applied sensor and/or verify the sensor connection and device environment
	Calibration Error	Retrim the device
	Secondary Value Degraded	Verify the ambient temperature is within operating limits
Failed	Electronics Failure	Replace the Device
	Asic Failure	Replace the Device
	HW / SW Incompatible	Verify the Hardware Revision is compatible with the Software Revision
	NV Memory Failure	Reset the device then download the Device Configuration
	Primary Value Failure	Verify the instrument process is within the Sensor range and/or confirm sensor configuration and wiring
	Secondary Value Failure	Verify sensor range and/or confirm sensor configuration and wiring
Function Check	Check	Transducer Block is under maintenance

4.5.5 Resource block diagnostics

Block errors

Table 4-3 lists conditions reported in the BLOCK_ERR parameter.

Table 4-3. Resource Block BLOCK_ERR messages

Condition name and description
Other
Device Needs Maintenance Now
Memory Failure: A memory failure has occurred in FLASH, RAM, or EEPROM memory
Lost NV Data: Non-volatile data that is stored in non-volatile memory has been lost
Device Needs Maintenance Now
Out of Service: The actual mode is out of service

Table 4-4. Resource Block RB.FD_EXTENDED_ACTIVE

RB.DETAILED_STATUS	Description
Sensor Transducer block error	Active when any SENSOR_DETAILED_STATUS bit is on
Manufacturing Block integrity error	The manufacturing block size, revision, or checksum is wrong
Hardware/software incompatible	Verify the manufacturing block revision and the hardware revision are correct/compatible with the software revision
Non-volatile memory integrity error	Invalid checksum on a block of NV data
ROM integrity error	Invalid application code checksum

4.6 Sensor transducer block

Note
When the engineering units of the XD_SCALE in the associated AI Block are selected, the engineering units in the Transducer Block change to the same units.
THIS IS THE ONLY WAY TO CHANGE THE ENGINEERING UNITS IN THE SENSOR TRANSDUCER BLOCK.

Damping

Damping values may be used for, and should equal, the update rate for Sensor 1, Sensor 2, and sensor differential. Sensor configuration automatically calculates a damping value. The default damping value is 5 seconds. Damping may be disabled by setting the parameter damping value to 0 seconds. The maximum damping value allowed is 32 seconds.

An alternate damping value may be entered with the following restrictions.

1. Single sensor configuration
   - 50 Hz or 60 Hz line voltage filters have a minimum user-configurable damping value of 0.5 seconds
2. Dual sensor configuration
   - 50 Hz line voltage filter a minimum user-configurable damping value of 0.9 seconds
   - 60 Hz line voltage filter a minimum user-configurable damping value of 0.7 seconds

⚠ The damping parameter in the transducer block may be used to filter measurement noise. By increasing the damping time, the transmitter will have a slower response time, but will decrease the amount of process noise that is translated to the Transducer Block Primary Value. Because both the LCD display and AI Block get input from the transducer block, adjusting the damping parameter affects the values passed to both blocks.

Note
The AI block has a filtering parameter called PV_FTIME. For simplicity, it is better to do filtering in the transducer block as damping will be applied to primary value on every sensor update. If filtering is done in AI block, damping will be applied to output every macrocycle. The LCD display will display value from Transducer block.

4.6.1 Sensor transducer block diagnostics

Table 4-5. Sensor Transducer Block BLOCK_ERR messages

Condition name and description
Other
Out of Service: The actual mode is out of service

Table 4-6. Sensor Transducer Block XD_ERR messages

Condition name and description
Electronics Failure: An electrical component failed
I/O Failure: An I/O failure occurred
Software Error: The software has detected an internal error
Calibration Error: An error occurred during calibration of the device
Algorithm Error: The algorithm used in the transducer block produced an error due to overflow, data reasonableness failure, etc.

Table lists the potential errors and the possible corrective actions for the given values. The corrective actions are in order of increasing system level compromises. The first step should always be to reset the transmitter and then if the error persists, try the steps in Table . Start with the first corrective action and then try the second.

Table 4-7. Sensor Transducer Block STB.SENSOR_DETAILED_ STATUS messages

STB.SENSOR_DETAILED_STATUS	Description
Invalid Configuration	Wrong sensor connection with wrong sensor type
ASIC RCV Error	The micro detected a chksum or start/stop bit failure with ASIC communication
ASIC TX Error	The ASIC detected a communication error
ASIC Interrupt Error	ASIC interrupts are too fast or slow
Reference Error	Reference resistors are greater than 25% of known value
ASIC Configuration Error	ASIC registers were not written correctly. (Also CALIBRATION_ERR)
Drift Alert	Difference between sensor values has exceeded user specified limit
Hot Backup Active	The device is currently operating in Hot Backup mode, meaning the primary sensor has failed
Sensor Open	Open sensor detected
Sensor Shorted	Shorted sensor detected
Terminal (Body) Temperature Failure	Open or shorted PRT detected
Sensor Out of Operating Range	Sensor readings have gone beyond PRIMARY_VALUE_RANGE values
Sensor beyond operating limits	Sensor readings have gone below 2% of lower range or above 6% of upper range of sensor

Table 4-7. Sensor Transducer Block STB.SENSOR_DETAILED_ STATUS messages

STB.SENSOR_DETAILED_STATUS	Description
Terminal (Body) Temperature Out of Operating Range	PRT readings have gone beyond SECONDARY_VALUE_RANGE values
Terminal (Body) Temperature Beyond Operating Limits	PRT readings have gone below 2% of lower range or above 6% of upper range of PRT. (These ranges are calculated and are not the actual range of the PRT which is a PT100 A385)
Sensor Degraded	For RTDs, this is excessive EMF detected. For Thermocouples, the loop resistance has drifted beyond the user-configured threshold limit.
Calibration Error	The user trim has failed due to excessive correction or sensor failure during the trim method

4.7 LCD display transducer block

The LCD display connects directly to the 3144P electronics FOUNDATION fieldbus output board. The meter indicates output and abbreviated diagnostic messages.

The first line of five characters displays the sensor being measured.

If the measurement is in error, “Error” appears on the first line. The second line indicates if the device or the sensor is causing the error.

Each parameter configured for display will appear on the LCD display for a brief period before the next parameter is displayed. If the status of the parameter goes bad, the LCD display will also cycle diagnostics following the displayed variable:

4.7.1 Custom meter configuration

Parameter #1 (Sensor 1) is factory configured to display the Primary Variable (temperature) from the LCD display transducer block. When shipping with dual sensors, Sensor 2 will be configured not to display. To change the configuration of Parameter #1, #2, or to configure additional parameters use the configuration parameters below. The LCD display Transducer Block can be configured to sequence four different process variables as long as the parameters are sourced from a function block scheduled to execute within the 3144P temperature transmitter. If a function block is scheduled in the 3144P that links a process variable from another device on the segment, that process variable can be displayed on the LCD display.

DISPLAY_PARAM_SEL

The DISPLAY_PARAM_SEL specifies how many process variables will be displayed, where up to four display parameters can be selected.

BLK_TAG_#(1)

Enter the Block Tag of the function block containing the parameter to be displayed. The default function block tags from the factory are:

TRANSDUCER
AI 1400, 1500, 1600, 1700
PID 1800 and 1900
ISEL 2000
CHAR 2100
ARTH 2200
Output Splitter OSPL 2300

(1) # represents the specified parameter number.

BLK_TYPE_#(1)

Enter the Block Type of the function block containing the parameter to be displayed. This parameter is generally selected by a drop-down menu with a list of possible function block types (e.g. Transducer, PID, AI, etc.).

PARAM_INDEX_#(1)

The PARAM_INDEX_# parameter is selected by a drop-down menu with a list of possible parameter names, based upon availability in the function block type selected. Choose the parameter to be displayed.

CUSTOM_TAG_#(1)

The CUSTOM_TAG_# is an optional user-specified tag identifier that can be configured to be displayed with the parameter instead of the block tag. A tag of up to five characters can be entered.

UNITS_TYPE_#(1)

The UNITS_TYPE_# parameter is selected by a three option drop-down menu: AUTO, CUSTOM, or NONE. AUTO is only when the parameter to be displayed is pressure, temperature, or percent. For other parameters, select CUSTOM, making sure to configure the CUSTOM_UNITS_# parameter. Select NONE if the parameter should be displayed without associated units.

CUSTOM_UNITS_#(1)

Specify custom units to be displayed with the parameter, entering up to six characters. To display Custom Units the UNITS_TYPE_# must be set to CUSTOM.

4.7.2 LCD display transducer block diagnostics

Table 4-8. LCD display Transducer Block BLOCK_ERR messages

Condition name and description
Other
Out of Service: The actual mode is out of service

Symptom	Possible causes	Recommended action
The LCD display displays “DSPLY#INVLID.” Read the BLOCK_ERR and if it says “BLOCK CONFIGURATION” perform the Recommended Action	One or more of the display parameters are not configured properly	See “LCD display transducer block” on page 152.
The Bar Graph and the AI.OUT readings do not match	The OUT_SCALE of the AI block is not configured properly	See “Analog Input (AI)” on page 155 and “Field communicator” on page 30.
“3144P” is being displayed or not all of the values are being displayed	The LCD display block parameter “DISPLAY_PARAMETER_SELECT” is not properly configured	See “LCD display transducer block” on page 152.
The display reads OOS	The resource and or the LCD display Transducer block are OOS	Verify that both blocks are in “AUTO”.
The display is hard to read	Some of the LCD display segments may have gone bad	See page 153; if some of the segment is bad, replace the LCD display.
	Device is out of the temperature limit for the LCD display. (-20 to 85 °C)	Check ambient temperature of the device.

4.8 Hot Backup™ transducer

Hot Backup parameters	Sub parameter	Description	Values to be set
FEATURE_CONFIG	FEATURE_ENABLE	Select the feature	Hot Backup
	DEFAULT_SENSOR	Set default sensor, either Sensor 1 or Sensor 2	Sensor 1
	UNIT_INDEX	Set unit of measurement	Deg C
FEATURE_VALUE	FEATURE_STATUS	This value changes dynamically	N/A
	FEATURE_VAL	This value changes dynamically	N/A

Note
Primary Value 1 indicates Sensor 1 value and Primary Value 2 indicates Sensor 2 value.

Sensor 1 as a default sensor

Primary value 1 status	Primary value 2 status	FEATURE_VAL / FEATURE_STATUS	Recommended action
Good	Good	Primary Value 1/Good	No Error
Good	Uncertain	Primary Value 1/Good	Sensor 2 out of operating range or Sensor 2 Degraded.
Good	Bad	Primary Value 1/Good	Sensor 2 Open or short or Beyond operating range
Uncertain	Good	Primary Value 2/Good	Hot Backup Active and (Sensor 1 out of operating range or Sensor 1 Degraded)
Uncertain	Uncertain	Primary Value 1/Uncertain	((Sensor 1 out of operating range or Sensor 1 Degraded) and (Sensor 2 out of operating range or Sensor 2 Degraded)) or Drift Alert
Uncertain	Bad	Primary Value 1/Uncertain	(Sensor 1 out of operating range or Sensor1 Degraded) and (Sensor 2 Open or short or Beyond operating range)
Bad	Good	Primary Value 2/Good	Hot Backup Active and Sensor 1 open or short or Beyond operating range
Bad	Uncertain	Primary Value 2/Uncertain	Hot Backup Active and Sensor 1 open or short or Beyond operating range and (Sensor 2 out of operating range or Sensor 2 Degraded)
Bad	Bad	None (Last good value)/Bad	Hot Backup Active and (Sensor 1 open or short or beyond operating range) and (Sensor 2 open or short or beyond operating range)

Sensor 2 as a default sensor

Primary value 1 status	Primary value 2 status	FEATURE_VAL / FEATURE_STATUS	Recommended action
Good	Good	Primary Value 2/Good	No Error
Good	Uncertain	Primary Value 1/Good	Hot Backup Active and Sensor 2 out of operating range or Sensor2 Degraded
Good	Bad	Primary Value 1/Good	Hot Backup Active and Sensor 2 Open or short or Beyond Operating range
Uncertain	Good	Primary Value 2/Good	Sensor 1 out of operating range or Sensor 1 Degraded
Uncertain	Uncertain	Primary Value 2/Uncertain	((Sensor 1 out of operating range or Sensor 1 Degraded) and (Sensor 2 out of operating range or Sensor 2 Degraded)) or Drift Alert
Uncertain	Bad	Primary Value 1/Uncertain	Hot Backup Active and (Sensor 1 out of operating range or Sensor 1 Degraded) and (Sensor 2 Open or short or Beyond operating range)
Bad	Good	Primary Value 2/Good	Sensor 1 open or short or Beyond operating range
Bad	Uncertain	Primary Value 2/Uncertain	Sensor 1 open or short or Beyond operating range and (Sensor 2 out of operating range or Sensor 2 Degraded)
Bad	Bad	None (Last good value)/Bad	Hot Backup Active and (Sensor 1 open or short or beyond operating range) and (Sensor 2 open or short or beyond operating range)

4.9 Analog Input (AI)

4.9.1 Simulation

⚠ Simulate replaces the channel value coming from the sensor transducer block. For testing purposes, there are two ways to manually drive the output of the Analog Input Block to a desired value.

Manual mode

To change only the OUT_VALUE and not the OUT_STATUS of the AI Block, place the TARGET MODE of the block to MANUAL, then change the OUT_VALUE to the desired value.

Simulate

1. If the SIMULATE switch is in the OFF position, move it to the ON position. If the SIMULATE switch is already in the ON position, move it to OFF and switch it back to the ON position.

Note
As a safety measure, the switch must be reset every time power is interrupted to the device to enable SIMULATE. This prevents a device that is tested on the bench from being installed in the process with SIMULATE still active.

2. To change both the OUT_VALUE and OUT_STATUS of the AI Block, set the TARGET MODE to AUTO.

3. Set SIMULATE_ENABLE_DISABLE to ‘Active.’

4. Enter the desired SIMULATE_VALUE to change the OUT_VALUE and SIMULATE_STATUS_QUALITY to change the OUT_STATUS.
If errors occur when performing the above steps, make sure that the SIMULATE jumper has been reset after powering the device.

4.9.2 Configure the AI block

⚠ A minimum of four parameters are required to configure the AI block. The parameters are described below, with example configurations shown at the end of this section.

CHANNEL

Select the channel that corresponds to the desired sensor measurement .

Channel	Measurement
1	Input 1
2	Input 2
3	Differential
4	Terminal (Body) Temperature
5	Input 1 Minimum Value
6	Input 1 Maximum Value
7	Input 2 Minimum Values
8	Input 2 Maximum Values
9	Differential Minimum Value
10	Differential Maximum Value
11	Terminal (Body) Minimum Value
12	Terminal (Body) Maximum Value
13	Hot Backup Value

L_TYPE

The L_TYPE parameter defines the relationship of the sensor measurement (sensor temperature) to the desired output temperature of the AI block. The relationship can be direct or indirect.

Direct

Select direct when the desired output will be the same as the sensor measurement (sensor temperature).

Indirect

Select indirect when the desired output is a calculated measurement based on the sensor measurement (e.g. ohm or mV). The relationship between the sensor measurement and the calculated measurement will be linear.

XD_SCALE and OUT_SCALE

The XD_SCALE and OUT_SCALE each include four parameters: 0%, 100%, engineering units, and precision (decimal point). Set these based on the L_TYPE:

L_TYPE is Direct

When the desired output is the measured variable, set the XD_SCALE to represent the operating range of the process. Set OUT_SCALE to match XD_SCALE.

L_TYPE is Indirect

When an inferred measurement is made based on the sensor measurement, set the XD_SCALE to represent the operating range that the sensor will see in the process. Determine the inferred measurement values that correspond to the XD_SCALE 0 and 100% points and set these for the OUT_SCALE.

Note

To avoid configuration errors, only select Engineering Units for XD_SCALE and OUT_SCALE that are supported by the device. The supported units are:

Temperature (channel 1 and 2)	Terminal (body) temperature
°C	°C
°F	°F
K	K
°R	R
Ω	
mV	

When the engineering units of the XD_SCALE are selected, this changes the engineering units of the PRIMARY_VALUE_RANGE in the Transducer Block to the same units.
THIS IS THE ONLY WAY TO CHANGE THE ENGINEERING UNITS IN THE SENSOR TRANSDUCER BLOCK, PRIMARY_VALUE_RANGE PARAMETER.

Configuration examples

Sensor Type: 4-wire, Pt 100 α = 385.
Desired measurement process temperature in the –200 to 500 °F range. Monitor the transmitter electronics temperature in the –40 to 185 °F range.

Transducer block

If host system supports methods:

1. Click on Methods.
2. Choose Sensor Connections.[(1)]
3. Follow on-screen instruction to setup Sensor 1 as a 4-wire, Pt 100 α = 385.

If host system does not support methods:

1. Put transducer block into OOS mode.
   a. Go to MODE_BLK.TARGET.
   b. Choose OOS (0x80).

(1) Some choices may not be available due to the current configuration of the device.
Examples:
a) Sensor 2 cannot be configured at all if Sensor 1 is set up as a 4-wire sensor
b) If Sensor 2 is configured, Sensor 1 can not be set up as a 4-wire sensor (and vise-versa)
c) When selecting a thermocouple as the sensor type, a 3- or 4-wire connection cannot be selected.
In this situation, configure the other sensor as "Not used." This will clear the dependencies that are preventing the configuration of the desired sensor.

2. Go to SENSOR_CONNECTION.
   a. Choose 4-wire (0x4).
3. Go to SENSOR_TYPE.
   a. Choose PT100A385.
4. Put the transducer block back into Auto mode.

AI blocks (basic configuration)

AI1 as Process Temperature

1. Put the AI Block into OOS mode.
   a. Go to MODE_BLK.TARGET.
   b. Choose OOS (0x80).
2. Go to CHANNEL.
   a. Choose Sensor 1.
3. Go to L_TYPE.
   a. Choose Direct.
4. Go to XD_Scale.
   a. Choose UNITS_INDEX to be °F.
   b. Set 0% = –200, set 100% = 500.
5. Go to OUT_SCALE.
   a. Choose UNITS_INDEX to be °F.
   b. Set the 0 and 100 scale to be the same as in Step 4b.
6. Put the AI block back into Auto mode.
7. Follow Host Procedure to download schedule into Block AI2 as Terminal Temperature (body temperature).
8. Put the AI block into OOS mode.
   a. Go to MODE_BLK.TARGET.
   b. Choose OOS (0x80).
9. Go to CHANNEL.
   a. Choose Terminal (Body) Temperature.
10. Go to L_TYPE.
    a. Choose Direct.
11. Go to XD_Scale.
    a. Choose UNITS_INDEX to be °F.
    b. Set 0% = –40, set 100% = 185.

12. Go to OUT_SCALE.
    a. Choose UNITS_INDEX to be °F.
    b. Set the 0 and 100 scale to be the same as in step 4b.
13. Put the AI block back into Auto mode.
14. Follow Host Procedure to download schedule into block.

4.9.3 Filtering

Note
If damping has already been configured in the transducer block, setting a non-zero value for PV_FTIME will add to that damping.

⚠ The filtering feature changes the response time of the device to smooth variations in output readings caused by rapid changes in input. Adjust the filter time constant (in seconds) using the PV_FTIME parameter. To disable the filter feature, set the filter time constant to zero.

4.9.4 Process alarms

Process alarm detection is based on the OUT value. Configure the alarm limits of the following standard alarms:

- High (HIGH_LIM)
- High high (HIGH_HIGH_LIM)
- Low (LOW_LIM)
- Low low (LOW_LOW_LIM)

To avoid alarm chattering when the variable is oscillating around the alarm limit, an alarm hysteresis in percent of the PV span can be set using the ALARM_HYS parameter. The priority of each alarm is set in the following parameters:

- HIGH_PRI
- HIGH_HIGH_PRI
- LOW_PRI
- LOW_LOW_PRI

Alarm priority

Alarms are grouped into five levels of priority.

Priority number	Priority description
0	The alarm condition is not used.
1	An alarm condition with a priority of 1 is recognized by the system, but is not reported to the operator.
2	An alarm condition with a priority of 2 is reported to the operator.
3-7	Alarm conditions of priority 3 to 7 are advisory alarms of increasing priority.
8-15	Alarm conditions of priority 8 to 15 are critical alarms of increasing priority.

4.9.5 Status

When a PV is passed from one function block to another, it passes a STATUS along with the PV. The STATUS can be: GOOD, BAD, or UNCERTAIN. When a fault occurs in the device, the PV will look at the last value with a STATUS of GOOD and the STATUS will change from GOOD to BAD, or from GOOD to UNCERTAIN. It is important that the control strategy that uses the PV also monitors the STATUS to take appropriate action when the STATUS changes from GOOD to either BAD or UNCERTAIN.

Status options

Status Options (STATUS_OPTS) supported by the AI block are shown below:

Propagate fault forward

If the status from the sensor is *Bad, Device failure* or *Bad, Sensor failure*, propagate it to OUT without generating an alarm. The use of these sub-status in OUT is determined by this option. Through this option, the user determines whether alarming (sending of an alert) will be done by the block or propagated downstream for alarming.

Uncertain if limited

Set the output status of the Analog Input block to *uncertain* if the measured or calculated value is limited.

BAD

Set the output status to *Bad* if the sensor is violating a high or low limit.

Uncertain if man mode

Set the output status of the Analog Input block to *uncertain* if the actual mode of the block is Man.

Note
The instrument must be in Out of Service mode to set the status option.

4.9.6 Advanced features

The following parameters provide the capabilities to drive a discrete output alarm in the event that a process alarm (HI_HI_LIM, HI_LIM, LO_LO_LIM, LO_LIM) has been exceeded.

ALARM_TYPE

ALARM_TYPE allows one or more of the process alarm conditions (HI_HI_LIM, HI_LIM, LO_LO_LIM, LO_LIM) detected by the AI function block to be used in setting its OUT_D parameter.

OUT_D

OUT_D is the discrete output of the AI function block based on the detection of process alarm condition(s). This parameter may be linked to other function blocks that require a discrete input based on the detected alarm condition.

4.9.7 Analog input diagnostics

Table 4-9. AI BLOCK_ERR Conditions

Condition number	Condition name and description
0	Other
1	Block Configuration Error: the selected channel carries a measurement that is incompatible with the engineering units selected in XD_SCALE, the L_TYPE parameter is not configured, or CHANNEL = zero.
3	Simulate Active: Simulation is enabled and the block is using a simulated value in its execution.
7	Input Failure/Process Variable has Bad Status: The hardware is bad, or a bad status is being simulated.
14	Power Up: Block is not scheduled.
15	Out of Service: The actual mode is out of service.

Table 4-10. Troubleshooting the AI block

Symptom	Possible causes	Recommended actions
Bad or no temperature readings (Read the AI "BLOCK_ERR" parameter)	BLOCK_ERR reads OUT OF SERVICE (OOS)	1. AI Block target mode target mode set to OOS. 2. Resource Block OUT OF SERVICE.
	BLOCK_ERR reads CONFIGURATION ERROR	1. Check CHANNEL parameter (see "CHANNEL" on page 156) 2. Check L_TYPE parameter (see "L_TYPE" on page 156) 3. Check XD_SCALE engineering units. (see "XD_SCALE and OUT_SCALE" on page 156)
	BLOCK_ERR reads POWERUP	Download schedule into block. Refer to host for downloading procedure.
	BLOCK_ERR reads BAD INPUT	1. Sensor Transducer Block Out Of Service (OOS) 2. Resource Block Out of Service (OOS)
	No BLOCK_ERR but readings are not correct. If using Indirect mode, scaling could be wrong.	1. Check XD_SCALE parameter. 2. Check OUT_SCALE parameter. (see "XD_SCALE and OUT_SCALE" on page 156)
	No BLOCK_ERR. Sensor needs to be calibrated or Zero trimmed.	See Section 3: HART® commissioning to determine the appropriate trimming or calibration procedure.
OUT parameter status reads UNCERTAIN and substatus reads EngUnitRangViolation.	Out_ScaleEU_0 and EU_100 settings are incorrect.	See "XD_SCALE and OUT_SCALE" on page 156.

4.10 Operation

4.10.1 Overview

This section contains information on operation and maintenance procedures.

Methods and manual operation

Each FOUNDATION fieldbus host or configuration tool has different ways of displaying and performing operations. Some hosts use DD Methods to complete device configuration and display data consistently across platforms. There is no requirement that a host or configuration tool support these features.

In addition, if your host or configuration tool does not support methods this section covers manually configuring the parameters involved with each method operation. For more detailed information on the use of methods, see the host or configuration tool manual.

4.10.2 Trim the transmitter

Calibrating the transmitter increases the precision of the measurement system. The user may use one or more of a number of trim functions when calibrating. The trim functions allow the user to make adjustments to the factory-stored characterization curve by digitally altering the transmitter's interpretation of the sensor input.

Figure 4-1. Trim

Application: Linear Offset	*Application*: Linear Offset and Slope Correction
Solution: Single-Point Trim	*Solution*: Two-Point Trim
Method:	*Method*:
1.Connect sensor to transmitter. Place sensor in bath between range points.	1.Connect sensor to transmitter. Place sensor in bath at low range point.
2.Enter known bath temperature using the field communicator.	2.Enter known bath temperature using the field communicator.
	3.Repeat at high range point.

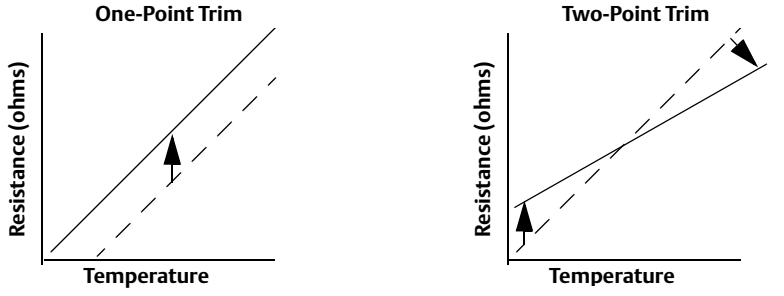

Sensor calibration, lower and upper trim methods

⚠ In order to calibrate the transmitter, run the Lower and Upper Trim Methods. If your system does not support methods, manually configure the Transducer Block parameters listed below.

1. Set MODE_BLK.TARGET_X to OOS.
2. Set SENSOR_CAL_METHOD_X to User Trim.
3. Set CAL_UNIT_X to supported engineering units in the transducer block.
4. Apply temperature that corresponds to the lower calibration point and allow the temperature to stabilize. The temperature must be between the range limits defined in PRIMRY_VALUE_RANGE_X.
5. Set values of CAL_POINT_LO_X to correspond to the temperature applied by the sensor.
6. Apply temperature, temperature corresponding to the upper calibration.
7. Allow temperature to stabilize.
8. Set CAL_POINT_HI_X.

Note
CAL_POINT_HI_X must be within PRIMARY_VALUE_RANGE_X and greater than CAL_POINT_LO_X + CAL_MIN_SPAN_X.

9. Set SENSOR_CAL_DATE_X to the current date.
10. Set SENSOR_CAL_WHO_X to the person responsible for the calibration.
11. Set SENSOR _CAL_LOC_X to the calibration location.
12. Set MODE_BLK.TARGET_X to AUTO.

Note
If trim fails the transmitter will automatically revert to factory trim.
Excessive correction or sensor failure could cause device status to read “calibration error.” To clear this, trim the transmitter.

Recall factory trim

⚠ To recall a factory trim on the transmitter, run the Recall Factory Trim. If your system does not support methods, manually configure the transducer block parameters listed below.

1. Set MODE_BLK.TARGET_X to OOS.
2. Set SENSOR_CAL_METHOD_X to Factory Trim.
3. Set SET_FACTORY_TRIM_X to Recall.
4. Set SENSOR_CAL_DATE_X to the current date.
5. Set SENSOR_CAL_WHO_X to the person responsible for the calibration.

6. Set SENSOR _CAL_LOC_X to the calibration location.

7. Set MODE_BLK.TARGET_X to AUTO.

Note
When changing the sensor type, the transmitter reverts to the factory trim and any other trim performed on the transmitter is lost.

4.10.3 Advanced diagnostics

Thermocouple degradation diagnostic

Thermocouple Degradation Diagnostic acts as a gauge of general thermocouple health and is indicative of any major changes in the status of the thermocouple or the thermocouple loop. The transmitter monitors for increasing resistance of the thermocouple loop to detect drift conditions or wiring condition changes. The degrading thermocouple can be caused by wire thinning, sensor breakdown, moisture intrusion or corrosion and can be an indication of an eventual sensor failure.

How it works: The thermocouple degradation diagnostic measures the amount of resistance on a thermocouple sensor path. Ideally a thermocouple would have zero resistance, but in reality it has some resistance especially for long thermocouple extension wires. As the sensor loop degrades (including sensor degradation and wire or junctions degradation), the resistance of the loop increases. First, the transmitter is configured to a baseline by the user. Then, at least once per second, the degradation diagnostic monitors the resistance in the loop by sending a pulsed current (in microamps) on the loop, measuring the voltage induced and calculating the effective resistance. As the resistance increases, the diagnostic can detect when the resistance exceeds the threshold set by the user at which the diagnostic will provide a digital alert. This feature is not intended to be a precise measurement of thermocouple status, but is a general indicator of thermocouple and thermocouple loop health by providing trending over time.

The thermocouple degradation diagnostic does not detect shorted thermocouple conditions.

Thermocouple diagnostic must be connected, configured, and enabled to read a thermocouple. Once the diagnostic has been activated, a Baseline resistance value is calculated. Then a threshold Trigger must be selected, which can be two, three, or four times the Baseline resistance, or the default of 5000 ohms. If the thermocouple loop resistance reaches the Trigger Level, a maintenance alert is generated.

Caution
The Thermocouple Degradation Diagnostic monitors the health of the entire thermocouple loop, including wiring, terminations, junctions, and the sensor itself. Therefore, it is imperative that the diagnostic baseline resistance be measured with the sensor fully installed and wired in the process, and not on the bench.

Note
The thermocouple resistance algorithm does not calculate resistance values while the active calibrator mode is enabled.

Glossary of AMS Device Manager terms

Trigger Level: Threshold resistance value for the thermocouple loop. The Trigger Level may be set for 2, 3, or 4 x Baseline or the default of 5000 Ohms. If the resistance of the thermocouple loop surpasses the Trigger Level, a PlantWeb maintenance alert will be generated.

Resistance: This is the existing resistance reading of the thermocouple loop.

Baseline Value: The resistance of the thermocouple loop obtained after installation, or after resetting the Baseline value. The Trigger Level may be calculated from the Baseline Value.

Trigger Setting: May be set for 2, 3, or 4 x Baseline or the default of 5000 Ohms.

Sensor 1 Degraded: A PlantWeb maintenance alert generated when the Thermocouple Degradation Diagnostic is enabled and the resistance in the loop exceeds the user-configured Trigger Level. This alert indicates maintenance may be necessary or that the thermocouple may have degraded.

Configure: Launches a method so the user can enable or disable the Thermocouple Degradation Diagnostic, select the Trigger Level, and automatically calculates the Baseline value (which may take several seconds).

Reset Baseline Value: Launches a method to recalculate the Baseline value (which may take several seconds).

Enabled: Indicates when the Thermocouple Degradation Diagnostic is enabled for the sensor.

Learning: Indicates when checked that the Baseline Value is being calculated.

Licensed: The check box indicates if Thermocouple Degradation Diagnostic is available for the specific transmitter.

Minimum and maximum temperature tracking

Minimum and Maximum Temperature Tracking (Min/Max Tracking) can record lifetime minimum and maximum temperatures with date and time stamps on Rosemount 3144P Temperature Transmitters. This feature records values for Sensor 1, Sensor 2, differential and terminal (body) temperatures. Min/Max Tracking only records temperature maxima and minima obtained since the last reset, and is not a logging function.

To track maximum and minimum temperatures, Min/Max Tracking must be enabled in the transducer function block using a field communicator, AMS Device Manager, or other communicator. While enabled, this feature allows for a reset of information at any time, and all variables can be reset simultaneously. Additionally, Sensor 1, Sensor 2, differential, and terminal (body) temperature minimum and maximum values may be reset individually. Once a particular field has been reset, the previous values are overwritten.

4.10.4 Statistical process monitoring (SPM)

SPM algorithm provides basic information regarding the behavior of process measurements such as PID control block and actual valve position. The algorithm can monitor up to four user selected variables. All variables must reside in a scheduled function block contained in the device. This algorithm can perform higher levels of diagnostics by distribution of computational power to field devices. The two statistical parameters monitored by the SPM are mean and standard deviation. By using the mean and standard deviation, the process or control levels and dynamics can be monitored for change over time. The algorithm also provides:

- Configurable limits/alarms for High variation, low dynamics, and mean changes with respect to the learned levels
- Necessary statistical information for Regulatory Control Loop Diagnostics, Root Cause Diagnostics, and Operations Diagnostics

Note
Fieldbus devices offer a wealth of information to the user. Both process measurement and control is feasible at the device level. The devices contain both the process measurements and control signals that are necessary to not only control the process, but to determine if the process and control is healthy. By looking at the process measurement data and control output over time, additional insight into the process can be gained. Under some load conditions and process demands, changes could be interpreted as degradation of instruments, valves, or major components such as pumps, compressors, heat exchangers, etc. This degradation may indicate that the loop control scheme should be re-tuned or re-evaluated. By learning a healthy process and continually comparing current information to the known healthy information, problems from degradation and eventual failure can be remedied ahead of time. These diagnostics aid in the engineering and maintenance of the devices. False alarms and missed detections may occur. If a reoccurring problem in the process exists, contact Emerson Process Management for assistance.

Configuration phase

The configuration phase is an inactive state when the SPM algorithm can be configured. In this phase, the block tags, block type, parameter, limits for high variation, low dynamics, and mean change detection can be set by the user. The “Statistical Process Monitoring Activation” parameter must be set to “disabled” to configure any SPM parameter. SPM can monitor any linkable input or output parameter of a scheduled function block that resides in the device.

Learning phase

In the learning phase of SPM, the algorithm establishes a baseline of the mean and dynamics of a SPM variable. The baseline data is compared to current data for calculating any changes in mean or dynamics of the SPM variables.

Monitoring phase

The monitoring phase starts once the learning process is complete. The algorithm compares the current values to the baseline values of the mean and standard deviation. During this phase the algorithm computes the percent change in mean and standard deviation to determine if the defined limits are violated.

4.10.5 SPM configuration

SPM_Bypass_Verification

"Yes" means that the verification of the baseline is turned off while "No" indicates the learned baseline is compared to the next current calculated value to ensure a good baseline value. The recommended value is NO.

SPM_Monitoring_Cycle

SPM_Monitoring_Cycle is the length of time the process values are taken and used in each calculation. A longer monitoring cycle may provide a more stable mean value with the default set at 15 minutes.

SPM#_Block_Tag

Enter the Block Tag of the function block containing the parameter to be monitored. Block tag must be entered, since there is no pull-down menu to select the tag. The tag must be a valid "Block Tag" in the device. The default block tags from the factory are:

- AI 1400
- AI 1500
- PID 1600
- ISEL 1700
- CHAR 1800
- ARITH 1900

SPM can also monitor "out" parameters from other devices. Link the "out" parameter to an input parameter of a function block residing in the device, and set up SPM to monitor the input parameter.

SPM#_Block Type

Enter the Block Type of the function block containing the parameter to be monitored.

SPM#_Parameter Index

Enter the Parameter Index of the parameter to be monitored.

SPM#_Thresholds

The SPM#_Thresholds allow alerts to be sent when the values are beyond the threshold values that set for each parameter.

Mean limit

Alert Limit value in percent change of the Mean compared with the baseline mean value.

High variation

Alert Limit value in percent change of the Stdev compared with the baseline Stdev value.

Low dynamics

Alert Limit value in percent change of the Stdev compared with the baseline Stdev value.

SPM_Active

SPM_Active parameter that starts the SPM when “Enabled”. “Disabled” turns the diagnostic monitoring off. It must be set to “Disabled” for configuration, and only set to “Enabled” after fully configuring the SPM.

SPM#_User command

Select “Learn” after all of the parameters have been configured to begin the Learning Phase. The monitoring phase starts after the learning process is complete. Select “Quit” to stop the SPM. “Detect” may be selected to return to the monitoring phase.

Baseline values

The Baseline Values are the calculated values from the process over the Learning Cycle.

SPM#_Baseline_Mean

SPM#_Baseline_Mean is the calculated average of the process variable over the Learning Cycle.

SPM#_Baseline_Standard_Deviation

SPM#_Baseline_Standard_Deviation is the square root of the variance of the process variable over the Learning Cycle.

4.11 Troubleshooting guides

Figure 4-2. 3144P troubleshooting flowchart

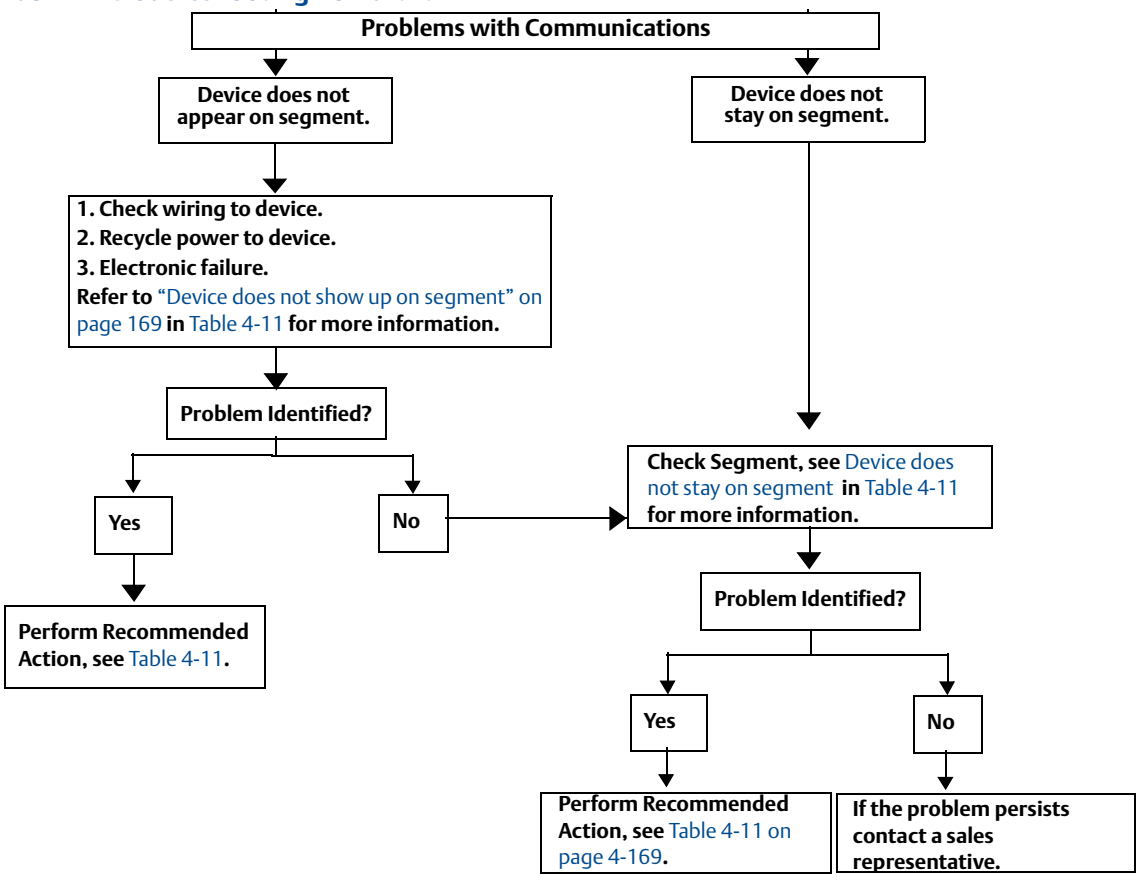

Table 4-11. Troubleshooting guide

Symptom[1]	Cause	Recommended actions
Device does not show up on segment	Unknown	Recycle power to device
	No power to device	1. Ensure the device is connected to the segment. 2. Check voltage at terminals. There should be 9–32 Vdc. 3. Check to ensure the device is drawing current. There should be approximately 11 mA.
	Segment problems	1. Check wiring (see Figure 2-13 on page 23).
	Electronics failing	1. Replace device.
	Incompatible network settings	1. Change host network parameters (refer to host documentation for procedure).
Device does not stay on segment[2]	Incorrect signal levels. Refer to host documentation for procedure.	1. Check for two terminators. 2. Excess cable length. 3. Bad Power supply or conditioner
	Excess noise on segment. Refer to host documentation for procedure.	1. Check for incorrect grounding. 2. Check for correct shielded wire. 3. Tighten wire connections. 4. Check for corrosion or moisture on terminals. 5. Check for Bad power supply.
	Electronics failing	1. Replace device.
	Other	1. Check for water around the transmitter.

(1) The corrective actions should be done with consultation of your system integrator.
(2) Wiring and installation 31.25 kbit/s, voltage mode, wire medium application guide AG-140 available from the FOUNDATION fieldbus.

Figure 4-3. Problems with communications flowchart

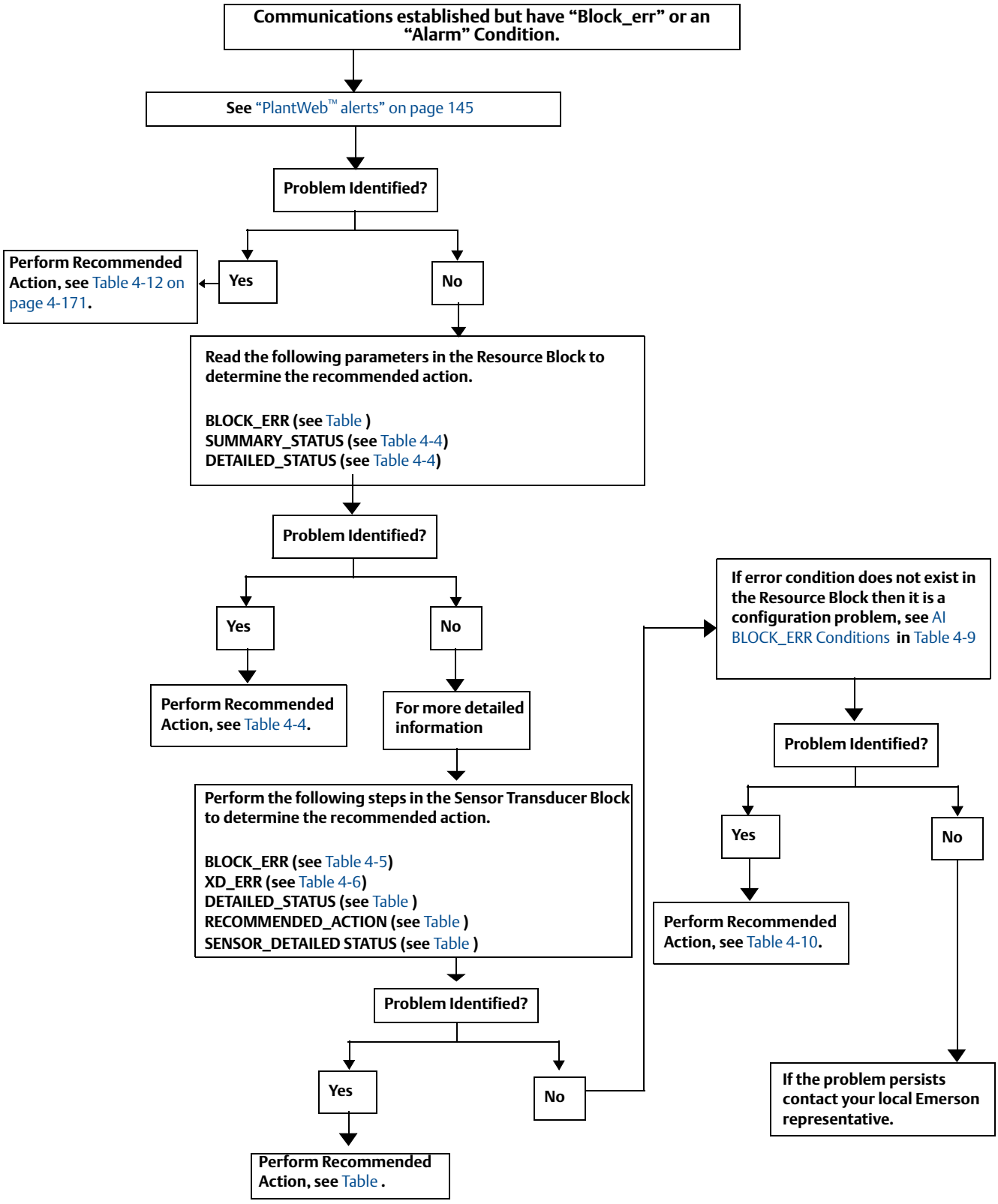

4.11.1 FOUNDATION fieldbus

If a malfunction is suspected despite the absence of a diagnostics message, follow the procedures described in Table 4-12 to verify that transmitter hardware and process connections are in good working order. Under each of the symptoms, specific suggestions for solving problems are offered. Always deal with the most likely and easiest-to-check conditions first.

Table 4-12. FOUNDATION fieldbus Troubleshooting

Symptom	Potential source	Corrective action
Transmitter does not Communicate with the Configuration Interface	Loop Wiring	• Check for adequate voltage to the transmitter. The transmitter requires between 9.0 and 32.0 V at the terminals to operate and provide complete functionality • Check for intermittent wire shorts, open circuits, and multiple grounds.
	Network parameters	• See "Failure mode switch" on page 188.
High Output	Sensor Input Failure or Connection	• Enter the transmitter test mode to isolate a sensor failure. • Check for a sensor open circuit. • Check the process variable to see if it is out of range.
	Loop Wiring	• Check for dirty or defective terminals, interconnecting pins, or receptacles.
	Electronics Module	• Enter the transmitter test mode to isolate a module failure. • Check the sensor limits to ensure calibration adjustments are within the sensor range.
Erratic Output	Loop Wiring	• Check for adequate voltage to the transmitter. The transmitter requires between 9.0 and 32.0 V at the terminals to operate and provide complete functionality. • Check for intermittent wire shorts, open circuits, and multiple grounds.
	Electronics Module	• Enter the transmitter test mode to isolate module failure.
Low Output or No Output	Sensor Element	• Enter the transmitter test mode to isolate a sensor failure. • Check the process variable to see if it is out of range.
	Loop Wiring	• Check for adequate voltage to the transmitter. The transmitter requires between 9.0 and 32.0 V at the terminals to operate and provide complete functionality. • Check for wire shorts and multiple grounds. • Check the loop impedance. • Check wire insulation to detect possible shorts to ground.
	Electronics Module	• Check the sensor limits to ensure calibration adjustments are within the sensor range. • Enter the transmitter test mode to isolate an electronics module failure.

4.11.2 LCD display

Note
For Rosemount 3144P transmitters with FOUNDATION fieldbus, the following LCD display options are not used: Bar graph, Sensor 1, Sensor 2, Differential, Multidrop, and Burst Mode."

Table 4-13. LCD Display Error Warning Descriptions

Message	LCD display top line	LCD display bottom line
RB.DETAILED_STATUS		
Sensor Transducer Block Error	"Error"	"DVICE"
Manufacturing Block Integrity Error	"Error"	"DVICE"
Hardware/Software Incompatible	"Error"	"DVICE"
Non-volatile Memory Integrity Error	"Error"	"DVICE"
ROM Integrity Error	"Error"	"DVICE"
Lost Deferred NV Data	"Error"	"DVICE"
NV Writes Deferred	No Errors Displayed	
ADB Transducer Block Error	No Errors Displayed	
STB.SENSR_DETAILED_STATUS		
Invalid Configuration	"Error"	"SNSOR"
ASIC RCV Error	"Error"	"SNSOR"
ASIC TX Error	"Error"	"SNSOR"
ASIC Interrupt Error	"Error"	"SNSOR"
Reference Error	"Error"	"SNSOR"
ASIC Configuration Error	"Error"	"SNSOR"
Sensor 1 Open	"Error"	"SNSOR"
Sensor 1 Shorted	"Error"	"SNSOR"
Terminal (Body) Temperature Failure	"Error"	"SNSOR"
Sensor 1 Out of Operating Range	No Errors Displayed	
Sensor 1 Beyond Operating Limits	"Error"	"SNSOR"
Terminal (Body) Temperature Out of Operating Range	No Errors Displayed	
Terminal (Body) Temperature Beyond Operating Limits	"Error"	"SNSOR"
Sensor 1 Degraded	"Error"	"SNSOR"
Calibration Error	"Error"	"SNSOR"
Sensor 2 Open	"Error"	"SNSOR"
Sensor 2 Shorted	"Error"	"SNSOR"
Sensor 2 Out of Operating Range	No Errors Displayed	
Sensor 2 Beyond Operating Limits	"Error"	"SNSOR"
Sensor 2 Degraded	"Error"	"SNSOR"

Table 4-13. LCD Display Error Warning Descriptions

Message	LCD display top line	LCD display bottom line
Sensor Drift Alert	“Error”	“SNSOR”
Hot Backup Active	“Error”	“SNSOR”
Thermocouple Degradation Alert	“Error”	“SNSOR”

The following are the default tags for each of the possible Function blocks which display data on the LCD display.

Block name	LCD display bottom line
Transducer	“TRANS”
AI 1400	“AI 14”
AI 1500	“AI 15”
AI 1600	“AI 16”
PID 1700	“PID 1”
PID 1800	“PID 1”
ISEL 1900	“ISEL”
CHAR 2000	“CHAR”
ARITH 2100	“ARITH”
OSPL 2200	“OSPL”

All other custom tags that are entered must be: numbers 0 - 9, letters A - Z, and/or spaces.

The following are the standard temperature units codes displayed on the LCD display.

Units	LCD display bottom line
Degrees C	“DEG C”
Degrees F	“DEG F”
Degrees K	“DEG K”
Degrees R	“DEG R”
Ohms	“OHMS”
Millivolts	“MV”
Percent (%)	Uses the percent symbol

All other custom units that are entered must be: numbers 0 - 9, letters A - Z, and/or spaces.

If the value of the process variable displayed has a bad or uncertain status, the following is shown:

Status	LCD display bottom line
Bad	“BAD”
Uncertain	“UNCTN”

When power is first applied, the LCD display will display the following:

LCD display top line	LCD display bottom line
“3144”	blank

If the device goes from “Auto” mode to Out-of-Service (OOS) mode, the LCD display will display the following:

LCD display top line	LCD display bottom line
“OOS”	blank

Section 5 Maintenance

Safety messages . . . . . page 175
Maintenance . . . . . page 176

5.1 Safety messages

Instructions and procedures in this section may require special precautions to ensure the safety of the personnel performing the operations. Information that raises potential safety issues is indicated by a warning symbol (⚠). Please refer to the following safety messages before performing an operation preceded by this symbol.

⚠ WARNING

Explosions may result in death or serious injury.

- Do not remove the instrument cover in explosive atmospheres when the circuit is live.
- Before connecting a Field Communicator in an explosive atmosphere, make sure the instruments in the loop are installed in accordance with intrinsically safe or non-incendive field wiring practices.
- Both transmitter covers must be fully engaged to meet explosion-proof requirements.

Electrical shock could cause death or serious injury. If the sensor is installed in a high-voltage environment and a fault or installation error occurs, high voltage may be present on transmitter leads and terminals.

- Use extreme caution when making contact with the leads and terminals.

Failure to follow these installation guidelines could result in death or serious injury:

- Make sure only qualified personnel perform the installation.

Process leaks could result in death or serious injury:

- Install and tighten thermowells or sensors before applying pressure, or process leakage may result.
- Do not remove the thermowell while in operation. Removing while in operation may cause process fluid leaks.

5.2 Maintenance

The 3144P Transmitter has no moving parts and requires a minimum amount of scheduled maintenance and features a modular design for easy maintenance. If a malfunction is suspected, check for an external cause before performing the diagnostics discussed in this section.

5.2.1 Test terminal (HART / 4–20 mA only)

The test terminal, marked as TEST or (“T”) on the terminal block, and the negative (-) terminal accept MINIGRABBER™, or alligator clips, facilitate in-process checks (see Figure 2-9 on page 21). The test and the negative terminals are connected across a diode through the loop signal current. The current measuring equipment shunts the diode when connected across the test (T) and negative (-) terminals; so as long as the voltage across the terminals is kept below the diode threshold voltage, no current passes through the diode. To ensure there is no leakage current through the diode while making a test reading, or while an indicating meter is connected, the resistance of the test connection or meter should not exceed 10 ohms. A resistance value of 30 ohms will cause an error of approximately 1.0 percent of reading.

5.2.2 Sensor checkout

⚠ If the sensor is installed in a high-voltage environment and a fault condition or installation error occurs, the sensor leads and transmitter terminals could carry lethal voltages. Use extreme caution when making contact with the leads and terminals.

To determine whether the sensor is at fault, replace it with another sensor or connect a test sensor locally at the transmitter to test remote sensor wiring. Transmitters with Option Code C7 (Trim to Special Sensor), are matched to a specific sensor. Select a standard, off-the-shelf sensor for use with the transmitter, or consult the factory for a replacement special sensor/transmitter combination.

5.2.3 Electronics housing

The transmitter is designed with a dual-compartment housing. One compartment contains the electronics module, and the other contains all wiring terminals and communication receptacles.

Removing the electronics module

Note
The electronics are sealed in a moisture-resistant plastic enclosure referred to as the electronics module. This module is a non-repairable unit and the entire unit must be replaced if a malfunction occurs.

The 3144P electronics module is located in the compartment opposite the wiring terminals.

Use the following procedure to remove the electronics module:

1. Disconnect the power to the transmitter.
2. ⚠ Remove the cover from the electronics side of the transmitter housing (see “Transmitter Exploded View” on page 203). Do not remove the covers in explosive atmospheres with a live circuit. Remove the LCD display, if applicable.
3. Loosen the two screws anchoring the electronics module assembly to the transmitter housing.

4. Firmly grasp the screws and assembly and pull straight out of the housing, taking care not to damage the interconnecting pins.

Note
If you are replacing the electronics module with a new one, make sure that the alarm switches are set in the same positions.

Replacing the electronics module

Use the following procedure to reassemble the electronics housing for the 3144P Transmitter.

1. Examine the electronics module to ensure that the failure mode and transmitter security switches are in the desired positions.
2. Carefully insert the electronics module lining up the interconnecting pins with the necessary receptacles on the electronics board.
3. Tighten the two mounting screws. Replace the LCD display, if applicable.
4. Replace the cover. Tighten $^{1}/_{6}$ of a revolution after the cover begins to compress the O-ring. Both transmitter covers must be fully engaged to meet explosion proof requirements.

5.2.4 Transmitter diagnostics logging

The Transmitter Diagnostics Logging feature stores advanced diagnostic information between device resets, such as what caused the transmitter to go into alarm, even if that event has disappeared. For example, if the transmitter detects an open sensor from a loose terminal connection, the transmitter will go into alarm. If wire vibration causes that wire to begin making a good connection, the transmitter will come out of alarm. This jumping in and out of alarm is frustrating when trying to determine what is causing the problem. However, the Transmitter Diagnostics Logging feature keeps track of what caused the transmitter to go into alarm and saves valuable debugging time. The log may be viewed using an asset management software, such as AMS™ Device Manager.

Section 6 Certified safety instrumented system (safety-certified)

Safety instrumented systems (SIS) certification . . . . . page 179
Rosemount® 3144P safety certified identification . . . . . page 179
Installation . . . . . page 180
Commissioning . . . . . page 180
Configuration . . . . . page 180
Safety messages . . . . . page 180
Certification . . . . . page 181
3144P safety-certified identification . . . . . page 181
Installation . . . . . page 181
Commissioning . . . . . page 181
Configuration . . . . . page 181
Operation and maintenance . . . . . page 182
Specifications . . . . . page 184
Spare parts . . . . . page 184

Note
This section applies to 4–20 mA only.

6.1 Safety instrumented systems (SIS) certification

The 3144P Temperature Transmitter is a two wire, 4-20 mA smart device. For safety instrumented systems usage it is assumed that the 4-20 mA output is used as the primary safety variable. The transmitter can be equipped with or without the display. The 3144P is classified as a Type B device according to IEC61508, having a hardware fault tolerance of 0.

The 3144P HART® Head Mount transmitter is certified to IEC 61508 for single transmitter use in Safety Instrumented Systems up to SIL 2 and redundant transmitter use in Safety Instrumented Systems up to SIL 3.

6.2 Rosemount® 3144P safety certified identification

All 3144P HART transmitters must be identified as safety certified before installing into SIS systems.

To identify a safety certified Rosemount 3144P, make sure the device satisfies number 1 below as well as at least one of options 2, 3 or 4.

1. Verify the transmitter was ordered with Output Option code “A”. This signifies that it is a 4-20mA/HART device.
   a. For example: MODEL 3144PDxA.....
2. See a Yellow Tag affixed to the outside of the transmitter, or the option code QT in the transmitter model string.

3. Check the Namur Software Revision located on the adhesive transmitter tag. “SW Rev _._._”.

   If the Device label software revision is 1.1.1 or higher, the device is safety certified.

4. You can also identify a certified 3144P by its Device Revision which can be found using any HART compliant communicator.

   For the 3144P, certified device revisions are as follows:

   – Device Revision 5.x (HART 5)
   – Device Revision 6.x (HART 7)

6.3 Installation

No special installation is required in addition to the standard installation practices outlined in this document. Always ensure a proper seal by installing the electronics housing cover(s) so that metal contacts metal.

The loop should be designed so the terminal voltage does not drop below 12 Vdc when the transmitter output is 24.5 mA.

Environmental limits are available in the 3144P Product Data Sheet (Document No. 00813-0100-4728). This document can be found at http://www2.emersonprocess.com/en-US/documentation/Pages/DocSearch.aspx.

6.4 Commissioning

The 3144P Safety Certified Transmitter can be commissioned by a person with average knowledge of Rosemount temperature transmitters and the configuration device being used. Please refer to “Confirm HART revision capability” on page 8 to confirm your system's HART Revision capability and to confirm the installation of the correct device drivers (separate drivers required for HART 5 and HART 7).

To commission the 3144P Safety Certified Transmitter using a 375/475 Field Communicator, use the Table 3-1 on page 3-38.

For more information on the field communicator visit http://www2.emersonprocess.com/en-US/brands/fieldcommunicator/Pages/fieldcommunicators.aspx.

6.5 Configuration

Use any HART capable configuration tool or the optional local operator interface to communicate with and verify the initial configuration or any configuration changes made to the 3144P prior to operating in Safety Mode. All configuration methods outlined in Section 3 are the same for the safety certified 3144P temperature transmitter with any differences noted.

6.6 Safety messages

Procedures and instructions in this section may require special precautions to ensure the safety of the personnel performing the operations. Information that raises potential safety issues is indicated by a warning symbol (⚠). Refer to the following safety messages before performing an operation preceded by this symbol.

⚠ WARNING

Explosions can result in death or serious injury.

Electrical shock can result in death or serious injury.

6.7 Certification

The 3144P is certified to IEC61508 for single transmitter use in Safety Instrumented Systems up to SIL 2 and redundant transmitter use in Safety Instrumented Systems up to SIL 3. The software is suitable for SIL 3 application.

6.8 3144P safety-certified identification

To identify Safety Instrumented System (SIS) safety-certified 3144P transmitters, verify one of the following:

1. See a yellow tag affixed to outside of transmitter.
2. Verify the option code QT in the model string.

6.9 Installation

No special installation is required in addition to the standard installation practices outlined in this document. Always ensure a proper seal by installing the electronics housing cover(s) so that metal contacts metal.

Environmental limits are available in the 3144P Product Data Sheet (Document No. 00813-0100-4021). This document can be found at *http://www.emersonprocess.com/rosemount/safety/safetyCertTemp.htm.*

The loop should be designed so the terminal voltage does not drop below 12 Vdc when the transmitter output is 24.5 mA.

6.10 Commissioning

The 3144P Safety Certified Transmitter can be commissioned by a person with average knowledge of Rosemount temperature transmitters and the configuration device being used.

To commission the 3144P Safety Certified Transmitter, use the HART "Fast Key Sequences" on page 38.

For more information on the Field Communicator see Document No. 00809-0100-4276. AMS™ Device Manager help can be found in the AMS Device Manager on-line guides within the AMS Device Manager system.

6.11 Configuration

All configuration methods outlined in Section 3 are the same for the safety certified 3144P temperature transmitter with any differences noted.

Damping and alarm levels

User-adjustable damping affects the transmitters ability to respond to changes in the applied process. The *damping value + response time* should not exceed the loop requirements.

Notes

1. Transmitter output is not safety-rated during: configuration changes, multidrop, fixed current mode, simulation mode, active calibrator mode, and loop test. Alternative means should be used to ensure process safety during transmitter configuration and maintenance activities. Loop test, simulation, and active calibrator modes are normally disabled automatically through the user interface. However, cycling power or performing a Processor Reset is recommended to ensure these functions are disabled. This action is effective regardless of the Security switch setting.
2. DCS, or safety logic solver, should be configured to match transmitter configuration. Figure 6-1 identifies the Emerson standard alarm and saturation levels. Alarm and saturation values are user-configurable.
   Setting the alarm values is a two step process:
   a. With a field communicator, select the alarm and saturation levels using the following Device Dashboard Fast Key sequence: 2, 2, 5, 6.
   b. Position the alarm switch to the required HI or LO position.

Figure 6-1. Rosemount Standard Alarm Levels

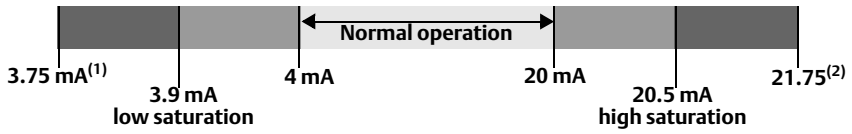

(1) Transmitter Failure, hardware alarm in LO position.
(2) Transmitter Failure, hardware alarm in HI position.

Security switch

Position the security switch to the “ON” position to prevent accidental or deliberate change of configuration data during normal operation. Be sure to take transmitter out of fixed current (loop test) and simulation before setting security switch to “ON”. Alternatively, the Processor Reset function may be used to restore normal operation while security switch is “ON”.

6.12 Operation and maintenance

6.12.1 Proof test

The following proof tests are recommended. In the event that an error is found in the safety functionality, proof test results and corrective actions taken must be documented at www.rosemount.com/safety.

Use "Table 3-1: Fast Key Sequences" to perform Loop Test, Review – Device Variables, and view Status.

The required proof test intervals depends upon the transmitter configuration and the temperature sensor(s) in use. Guidance is available in Table 6-1 on page 6-183. Refer to the FMEDA report for further information.

Abbreviated proof test

Conducting the abbreviated proof test detects approximately 63% of transmitter DU failures, and approximately 90% of temperature sensor(s) DU failures, not detected by the 3144P safety-certified automatic diagnostics, for a typical overall assembly coverage of 67%.

1. Using Loop Test, enter the milliampere value representing a high alarm state.
2. Check the reference meter to verify the mA output corresponds to the entered value.
3. Using Loop Test, enter the milliampere value representing a low alarm state.
4. Check the reference meter to verify the mA output corresponds to the entered value.
5. Use a Field Communicator to view detailed device status to ensure no alarms or warnings are present in the transmitter.
6. Check that sensor value(s) are reasonable in comparison to a basic process control system (BPCS) value.
7. Document the test results per the plant's requirements.

Extended proof test

Conducting the extended proof test, which includes the abbreviated proof test, detects approximately 96% of transmitter DU failures and approximately 99% of temperature sensor(s) DU failures, not detected by the 3144P safety-certified automatic diagnostics, for a typical overall assembly coverage of 96%.

1. Execute the abbreviated proof test.
2. Perform a minimum two point sensor verification check. If two sensors are used, repeat for each sensor. If calibration is required for the installation, it may be done in conjunction with this verification.
3. Verify that the housing temperature value is reasonable.
4. Document the test results per the plant's requirements.

Table 6-1. Proof test interval guideline

Sensors	SFF	Abbreviated proof test	Extended proof test	Notes
4-wire RTD	90.8%	10 years	10 years	
T/C	92.0%	10 years	10 years	
Dual T/C	92.9%	10 years	10 years	Using U3 Drift Alert & HotBackup
Dual 3-wire RTD	92.5%	10 years	10 years	Using U3 Drift Alert & HotBackup
T/C & 3-wire RTD	91.2%	10 years	10 years	Using U3 Drift Alert & HotBackup

Proof test intervals are based on typical sensor failure rates from the *Electrical and Mechanical Component Reliability Handbook* Second Edition, exida.com, 2008. A low stress environment without extension wire is assumed, with 30% of SIL 2 PFDavg limit budgeted for the transmitter and sensor element. See the FMEDA report for additional details or references.

6.12.2 Inspection

The 3144P is repairable by major component replacement.

Visual inspection

Not required

Special tools

Not required

Product repair

All failures detected by the transmitter diagnostics or by the proof-test must be reported. Feedback can be submitted electronically at *http://www.emersonprocess.com/rosemount/safety/safetyCertTemp.htm (Contact Us button)*.

6.13 Specifications

The 3144P must be operated according to the functional and performance specifications provided in the 3144P Product Data Sheet (Document No. 00813-0100-4021) or in Appendix A: Reference data.

6.13.1 Failure rate data

The FMEDA report includes failure rates, common cause Beta factor estimates, and independent information on generic sensor models.

The report is available at *http://www.emersonprocess.com/rosemount/safety/safetyCertTemp.htm*

6.13.2 Product life

50 years – based on worst case component wear-out mechanisms – not based on wear-out of process sensors.

Report any safety related product information at *http://www.emersonprocess.com/rosemount/safety/safetyCertTemp.htm*

6.14 Spare parts

This spare part is available for the 3144P Temperature Transmitter.

Description	Part number
Safety Certified electronics module assembly	03144-3111-1007

Section 7 Prior use (PU) safety instrumented system

Overview . . . . . page 187
Safe failure fraction . . . . . page 188
Installation . . . . . page 188

Note
This section applies to 4–20 mA only.

7.1 Overview

This section details the requirements for using the 3144P in Prior Use (PU) Safety Instrumented Systems (safety-certified). Although the 3144P is certified for functional safety per IEC61508, the non-certified transmitter may also be used in Safety Applications using the PU. The complete Failure Modes, Effects, and Diagnosis Analysis (FMEDA) was completed to determine the safe failure fraction (SFF) when using this device in a safety-certified application.

FMEDA are the device characteristics that are taken into account when attempting to achieve functional safety certification per IEC61508 of a device. From the FMEDA, failure rates are determined for all temperature sensing device options. Furthermore, the Safe Failure Fraction is calculated for each of the four different input device configurations.

The non-certified 3144P is an isolated 2-wire 4-20 mA SMART device classified as Type B according to IEC61508. It contains self-diagnostics and is programmed to send its output to either a high or low failure state upon internal detection of a failure.

The analysis shows that the device has a safe failure fraction greater than 90% (assuming that the logic solver is programmed to detect over-scale and under-scale currents). The device also has a safe failure fraction of over 90% when used with a temperature sensing device, such as thermocouple or RTD. The device can detect open and short circuit failures of these temperature sensing devices.

Refer to the 3144P safety-certified FMEDA report for failure rate data.

Notes

1. Transmitter output is not Prior Use safety-rated during: configuration changes, multidrop, simulation, active calibrator mode, and loop test. Alternative means should be used to ensure process safety during transmitter configuration and maintenance activities. Loop test, simulation and active calibrator modes are normally disabled automatically through the user interface. However, cycling power or performing a Processor Reset is recommended to ensure these functions are disabled. This action is effective regardless of the Security switch setting.
2. DCS, or safety logic solver, should be configured to match transmitter configuration.
3. Figure 6-1 identifies the Emerson® standard alarm and saturation levels. Alarm and saturation values are user-configurable.

   Setting the alarm values is a two step process.

   1. With a field communicator, select the alarm and saturation levels.
   2. Position the alarm switch to the required HI or LO position.

7.2 Safe failure fraction

The Safe Failure Fraction calculation for the combination of the 3144P and the process sensor must consider the effects of the transmitter's process sensor diagnostics. The 3144P FMEDA report should be consulted for calculated transmitter failure rates. Sensor failure data may be found in various references, or may be based on the user's experience history. A copy of the FMEDA can be found at *http://www.emersonprocess.com/rosemount/safety/safetyCertTemp.htm*

7.3 Installation

No special installation practices are necessary with the 3144P in a PU Safety Instrumented System. However, a full review of the Failure Mode and Security switches is required. Follow the standard installation requirements (see Section 2: Installation).

7.3.1 Switches

Failure mode switch

The transmitter monitors itself during normal operation using an automatic diagnostic routine. If the diagnostic routine detects a sensor failure or an electronics failure, the transmitter goes into high or low alarm, depending on the position of the failure mode switch.

The analog alarm and saturation values used by the transmitter depends on whether it is configured to standard (set by the factory) or NAMUR-compliant operation. These values are also custom-configurable in both the factory and the field using the Field Communicator. The limits are:

- $21.0 \leq I \leq 23$ for high alarm
- $3.5 \leq I \leq 3.75$ for low alarm

The values for standard and NAMUR operation are as follows:

Characteristics	Standard operation	NAMUR-compliant operation
Fail High	$21.75\ mA \leq I \leq 23.0\ mA$	$21.0\ mA \leq I \leq 23.0\ mA$
High Saturation	$I \geq 20.5\ mA$	$I \geq 20.5\ mA$
Low Saturation	$I \leq 3.90\ mA$	$I \leq 3.8\ mA$
Fail Low	$I \leq 3.75\ mA$	$I \leq 3.6\ mA$

Transmitter security switch

The transmitter is equipped with a write-protect switch that can be positioned to prevent accidental and deliberate change of configuration data.

7.3.2 Changing switch position

The Failure Mode and Security switches are located on the top center of the electronics module (see Figure 7-1 on page 189) which is on the electronics side of the transmitter housing. For transmitters with an LCD display, the electronics module is located behind the LCD display faceplate.

Without an LCD display

1. If the transmitter is installed, set the loop to manual.
2. ⚠ Remove the housing cover on the electronics side of the transmitter. Do not remove the transmitter cover in explosive atmospheres with a live circuit.
3. Set the switches to the desired position (see Figure 7-1).
4. ⚠ Replace the transmitter cover. Both covers must be fully engaged to meet explosion-proof requirements.
5. Set the loop to automatic control.

With an LCD display

1. If the transmitter is installed, set the loop to manual.
2. ⚠ Remove the housing cover on the electronics side of the transmitter. Do not remove the transmitter cover in explosive atmospheres with a live circuit.
3. Remove the housing cover, then unscrew the LCD display screws and gently slide the meter straight off.
4. Set the switches to the desired position. The simulate switch is default set to the “on” position (see Figure 7-1).
5. Gently slide the LCD display back into place, making sure to line up the 10 pin connection.
6. Secure the LCD display with replacing the LCD display screws.
7. ⚠ Replace the transmitter cover. Both covers must be fully engaged to meet explosion-proof requirements.
8. Set the loop to automatic control.

Figure 7-1. Transmitter Jumper Locations

Switch location	LCD display faceplate
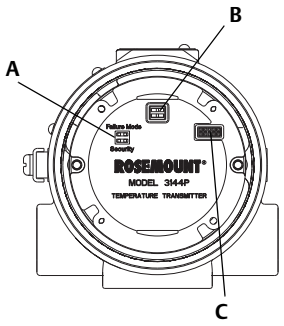	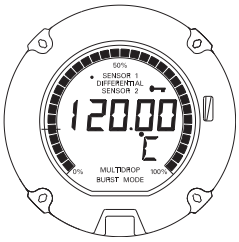

A. Diagram of switches
B. Fail mode and security switch
C. LCD display connector

7.3.3 Proof test

The following proof tests are recommended. In the event that an error is found in the safety functionality, proof test results and corrective actions taken must be documented at www.rosemont.com/safety.

Use Table 3-1: Fast Key Sequences to perform Loop Test, Review – Device Variables, and view Status.

The required proof test intervals will depend on the transmitter configuration and the temperature sensor(s) in use. Guidance is available in Table 6-1: Proof test interval guideline Refer to the FMEDA report for further information.

Abbreviated proof test

Conducting the abbreviated proof test detects approximately 63% of transmitter DU failures and approximately 90% of temperature sensor(s) DU failures, not detected by the 3144P safety-certified automatic diagnostics, for a typical overall assembly coverage of 67%.

1. Using Loop Test, enter the milliampere value representing a high alarm state.
2. Check the reference meter to verify the mA output corresponds to the entered value.
3. Using Loop Test, enter the milliampere value representing a low alarm state.
4. Check the reference meter to verify the mA output corresponds to the entered value.
5. Use a field communicator to view detailed device status to ensure no alarms or warnings are present in the transmitter.
6. Check that sensor value(s) are reasonable in comparison to a basic process control system (BPCS) value.
7. Document the test results per the plant's requirements.

Extended proof test

Conducting the extended proof test, which includes the abbreviated proof test, detects approximately 96% of transmitter DU failures and approximately 99% of temperature sensor(s) DU failures, not detected by the 3144P safety-certified automatic diagnostic, for a typical overall assembly coverage of 96%.

1. Execute the abbreviated proof test.
2. Perform a minimum two point sensor verification check. If two sensors are used, repeat for each sensor. If calibration is required for the installation, it may be done in conjunction with this verification.
3. Verify the housing temperature value is reasonable.
4. Document the test results per the plant's requirements.

Appendix A Reference data

HART® and Foundation™ fieldbus specifications . . . . . page 191
HART / 4–20 mA specifications . . . . . page 198
Foundation fieldbus specifications . . . . . page 200
Dimensional drawings . . . . . page 203
Ordering information . . . . . page 206
Spare parts list . . . . . page 211

A.1 HART® and FOUNDATION™ fieldbus specifications

A.1.1 Functional specifications

Inputs

User-selectable. See Accuracy on page 194 for sensor options.

Output

2-wire device with either 4–20 mA/HART, linear with temperature or input. Completely digital output with FOUNDATION fieldbus communication (ITK 4.5 compliant).

Isolation

Input/output isolation tested up to 500 V rms (707 Vdc).

Humidity limits

0–99% Relative Humidity (Non-condensing).

Update time

Approximately 0.5 seconds for a single sensor (1 second for dual sensors).

A.1.2 Physical specifications

Conduit connections

The standard field mount housing has ½–14 NPT conduit entries. Additional conduit entry types are available, including PG13.5 (PG11), M20 X 1.5 (CM20), or JIS G ½. When any of these additional entry types are ordered, adapters are placed in the standard field housing so these alternative conduit types fit correctly. See Dimensional drawings on page 203 for dimensions.

Materials of construction

Electronics Housing

- Low-copper aluminum or CF-8M (cast version of 316 Stainless Steel)

Paint

- Polyurethane

Cover o-rings
Buna-N

Mounting
Transmitters may be attached directly to the sensor. Optional mounting brackets (codes B4 and B5) permit remote mounting. See Optional Transmitter Mounting Brackets on page 204.

Weight

Aluminum[1]	Stainless Steel[1]
3.1 lb. (1.4 kg)	7.8 lb. (3.5 kg)

(1) Add 0.5 lb. (0.2 kg) for meter or 1.0 lb. (0.5 kg) for bracket options.

Enclosure ratings
NEMA 4X, CSA Enclosure Type 4X, IP66, and IP68.

A.1.3 Performance specifications

Stability
- ±0.1% of reading or 0.1 °C, whichever is greater, for 24 months for RTDs.
- ±0.1% of reading or 0.1 °C, whichever is greater, for 12 months for thermocouples.

5 year stability
- ±0.25% of reading or 0.25 °C, whichever is greater, for 5 years for RTDs.
- ±0.5% of reading or 0.5 °C, whichever is greater, for 5 years for thermocouples.

Vibration effect
Tested to the following with no effect on performance:

Frequency	Acceleration
10–60 Hz	0.21 mm peak displacement
60–2000 Hz	3 g

Self calibration
The analog-to-digital measurement circuitry automatically self-calibrates for each temperature update by comparing the dynamic measurement to extremely stable and accurate internal reference elements.

RFI effect
Worst case RFI effect is equivalent to the transmitter's nominal accuracy specification, according to Accuracy on page 194, when tested in accordance with ENV 50140, "30 V/m (HART) / 20 V/m (HART T/C)" / 10 V/m (FOUNDATION fieldbus), 80 to 1000 MHz, with unshielded cable.

CE electromagnetic compatibility compliance testing
The 3144P meets all requirements listed under IEC 61326: Amendment 1, 2006.

External ground screw assembly

The external ground screw assembly can be ordered by specifying code G1 when an enclosure is specified. However, some approvals include the ground screw assembly in the transmitter shipment, hence it is not necessary to order code G1. The table below identifies which approval options include the external ground screw assembly.

Approval type	External ground screw assembly included(1)
E5, I1, I2, I5, I6, I7, K5, K6, KB, NA	No–Order option code G1
E1, E2, E4, E7, K1, K7, KA, N1, N7, ND	Yes

(1) The parts contained with the G1 option are included with the Integral Protector option code T1. When ordering T1, the G1 option code does not need to be ordered separately.

Hardware tag

- No charge
- 2 lines of 28 characters (56 characters total)
- Tags are stainless steel
- Permanently attached to transmitter
- Character height is $^{1}/_{16}$-in. (1.6mm)
- A wire-on tag is available upon request. 5 lines of 12 characters (60 characters total)

Software tag

- HART transmitter can store up to 8 characters in HART 5 mode and 32 characters in HART 7 mode. FOUNDATION fieldbus transmitters can store up to 32 characters.
- Can be ordered with different software and hardware tags.
- If no software tag characters are specified, the first 8 characters of the hardware tag are the default.

Accuracy

Sensor options	Sensor reference	Input ranges		Minimum span[1]		Digital accuracy[2]		Enhanced accuracy [3]	D/A accuracy[4][5]
2-, 3-, 4-wire RTDs		°C	°F	°C	°F	°C	°F	°C	
Pt 100 (α = 0.00385)	IEC 751	–200 to 850	–328 to 1562	10	18	± 0.10	± 0.18	± 0.08	±0.02% of span
Pt 200 (α = 0.00385)	IEC 751	–200 to 850	–328 to 1562	10	18	± 0.22	± 0.40	±0.176	±0.02% of span
Pt 500 (α = 0.00385)	IEC 751	–200 to 850	–328 to 1562	10	18	± 0.14	± 0.25	±0.112	±0.02% of span
Pt 1000 (α = 0.00385)	IEC 751	–200 to 300	–328 to 572	10	18	± 0.10	± 0.18	± 0.08	±0.02% of span
Pt 100 (α = 0.003916)	JIS 1604	–200 to 645	–328 to 1193	10	18	± 0.10	± 0.18	± 0.08	±0.02% of span
Pt 200 (α = 0.003916)	JIS 1604	–200 to 645	–328 to 1193	10	18	± 0.22	± 0.40	±0.176	±0.02% of span
Ni 120	Edison Curve No. 7	–70 to 300	–94 to 572	10	18	± 0.08	± 0.14	±0.64	±0.02% of span
Cu 10	Edison Copper Winding No. 15	–50 to 250	–58 to 482	10	18	±1.00	± 1.80	± 0.08	±0.02% of span
Pt 50 (α=0.00391)	GOST 6651-94	–200 to 550	–328 to 1022	10	18	±0.20	±0.36	± 0.16	±0.02% of span
Pt 100 (α=0.00391)	GOST 6651-94	–200 to 550	–328 to 1022	10	18	±0.10	±0.18	± 0.08	±0.02% of span
Cu 50 (α=0.00426)	GOST 6651-94	–50 to 200	–58 to 392	10	18	±0.34	±0.61	± 0.272	±0.02% of span
Cu 50 (α=0.00428)	GOST 6651-94	–185 to 200	–301 to 392	10	18	±0.34	±0.61	± 0.272	±0.02% of span
Cu 100 (α=0.00426)	GOST 6651-94	–50 to 200	–58 to 392	10	18	±0.17	±0.31	±0.136	±0.02% of span
Cu 100 (α=0.00428)	GOST 6651-94	–185 to 200	–301 to 392	10	18	±0.17	±0.31	±0.136	±0.02% of span
Thermocouples[6]									
Type B[7]	NIST Monograph 175, IEC 584	100 to 1820	212 to 3308	25	45	± 0.75	± 1.35		±0.02% of span
Type E	NIST Monograph 175, IEC 584	–50 to 1000	–58 to 1832	25	45	± 0.20	± 0.36		±0.02% of span
Type J	NIST Monograph 175, IEC 584	–180 to 760	–292 to 1400	25	45	± 0.25	± 0.45		±0.02% of span
Type K[8]	NIST Monograph 175, IEC 584	–180 to 1372	–292 to 2501	25	45	± 0.25	± 0.45		±0.02% of span
Type N	NIST Monograph 175, IEC 584	–200 to 1300	–328 to 2372	25	45	± 0.40	± 0.72		±0.02% of span
Type R	NIST Monograph 175, IEC 584	0 to 1768	32 to 3214	25	45	± 0.60	± 1.08		±0.02% of span

Sensor options	Sensor reference	Input ranges		Minimum span[9]		Digital accuracy[10]		Enhanced accuracy [11]	D/A accuracy[12][13]
Type S	NIST Monograph 175, IEC 584	0 to 1768	32 to 3214	25	45	± 0.50	± 0.90		±0.02% of span
Type T	NIST Monograph 175, IEC 584	–200 to 400	–328 to 752	25	45	± 0.25	± 0.45		±0.02% of span
DIN Type L	DIN 43710	–200 to 900	–328 to 1652	25	45	± 0.35	± 0.63		±0.02% of span
DIN Type U	DIN 43710	–200 to 600	–328 to 1112	25	45	± 0.35	± 0.63		±0.02% of span
Type W5Re/W26Re	ASTM E 988-96	0 to 2000	32 to 3632	25	45	± 0.70	± 1.26		±0.02% of span
GOST Type L	GOST R 8.585-2001	–200 to 800	–328 to 1472	25	45	± 0.25	± 0.45		±0.02% of span
Other input types									
Millivolt Input		–10 to 100 mV		3 mV		±0.015 mV			±0.02% of span
2-, 3-, 4-wire Ohm Input		0 to 2000 ohms		20 ohm		±0.35 ohm			±0.02% of span

(1) No minimum or maximum span restrictions within the input ranges. Recommended minimum span will hold noise within accuracy specification with damping at zero seconds.
(2) Digital accuracy: Digital output can be accessed by the Field Communicator.
(3) Enhanced accuracy can be ordered using the P8 Model Code.
(4) Total Analog accuracy is the sum of digital and D/A accuracies.
(5) Applies to HART / 4-20 mA devices.
(6) Total digital accuracy for thermocouple measurement: sum of digital accuracy +0.25 °C (0.45 °F) (cold junction accuracy).
(7) Digital accuracy for NIST Type B is ±3.0 °C (±5.4 °F) from 100 to 300 °C (212 to 572 °F).
(8) Digital accuracy for NIST Type K is ±0.50 °C (±0.9 °F) from –180 to –90 °C (–292 to –130 °F).
(9) No minimum or maximum span restrictions within the input ranges. Recommended minimum span will hold noise within accuracy specification with damping at zero seconds.
(10) Digital accuracy: Digital output can be accessed by the Field Communicator.
(11) Enhanced accuracy can be ordered using the P8 Model Code.
(12) Total Analog accuracy is the sum of digital and D/A accuracies.
(13) Applies to HART / 4-20 mA devices.

Reference accuracy example (HART only)

When using a Pt 100 (α = 0.00385) sensor input with a 0 to 100 °C span: Digital Accuracy would be ±0.10 °C, D/A accuracy would be ±0.02% of 100 °C or ±0.02 °C, Total = ±0.12 °C.

$$\text{TotalSystemAccuracy} = \sqrt{(\text{TransmitterAccuracy})^2 + (\text{SensorAccuracy})^2}$$

Differential capability exists between any two sensor types (dual-sensor option)

For all differential configurations, the input range is X to Y where:

- X = Sensor 1 minimum – Sensor 2 maximum *and*
- Y = Sensor 1 maximum – Sensor 2 minimum.

Digital accuracy for differential configurations (dual-sensor option, HART only)

- Sensor types are similar (e.g., both RTDs or both T/Cs): Digital Accuracy = 1.5 times worst case accuracy of either sensor type.
- Sensor types are dissimilar (e.g., one RTD, one T/C): Digital Accuracy = Sensor 1 Accuracy + Sensor 2 Accuracy.

Ambient temperature effect

Table A-1. Ambient Temperature Effect

Sensor options	Digital accuracy per 1.0 °C (1.8 °F) change in ambient[1]	Range	D/A effect[2]
2-, 3-, or 4- Wire RTDs			
Pt 100 (α = 0.00385)	0.0015 °C (0.0027 °F)	Entire Sensor Input Range	0.001% of span
Pt 200 (α = 0.00385)	0.0023 °C (0.00414 °F)	Entire Sensor Input Range	0.001% of span
Pt 500 (α = 0.00385)	0.0015 °C (0.0027 °F)	Entire Sensor Input Range	0.001% of span
Pt 1000 (α = 0.00385)	0.0015 °C (0.0027 °F)	Entire Sensor Input Range	0.001% of span
Pt 100 (a = 0.003916)	0.0015 °C (0.0027 °F)	Entire Sensor Input Range	0.001% of span
Pt 200 (a = 0.003916)	0.0023 °C (0.00414 °F)	Entire Sensor Input Range	0.001% of span
Ni 120	0.0010 °C (0.0018 °F)	Entire Sensor Input Range	0.001% of span
Cu 10	0.015 °C (0.027 °F)	Entire Sensor Input Range	0.001% of span
Pt 50 (a = 0.00391)	0.003 °C (0.0054 °F)	Entire Sensor Input Range	0.001% of span
Pt 100 (a = 0.00391)	0.0015 °C (0.0027 °F)	Entire Sensor Input Range	0.001% of span
Cu 50 (a = 0.00426)	0.003 °C (0.0054 °F)	Entire Sensor Input Range	0.001% of span
Cu 50 (a = 0.00428)	0.003 °C (0.0054 °F)	Entire Sensor Input Range	0.001% of span
Cu 100 (a = 0.00426)	0.0015 °C (0.0027 °F)	Entire Sensor Input Range	0.001% of span
Cu 100 (a = 0.00428)	0.0015 °C (0.0027 °F)	Entire Sensor Input Range	0.001% of span
Thermocouples			
Type B	0.014 °C 0.029 °C – (0.0021% of (T – 300)) 0.046 °C – (0.0086% of (T – 100))	R ≥ 1000 °C 300 °C ≤ R < 1000 °C 100 °C ≤ R < 300 °C	0.001% of span
Type E	0.004 °C + (0.00043% of T)		0.001% of span
Type J	0.004 °C + (0.00029% of T) 0.004 °C + (0.0020% of absolute value T)	T ≥ 0 °C T< 0 °C	0.001% of span
Type K	0.005 °C + (0.00054% of T) 0.005 °C + (0.0020% of absolute value T)	T ≥ 0 °C T < 0 °C	0.001% of span
Type N	0.005 °C + (0.00036% of T)	All	0.001% of span
Types R	0.015 °C 0.021 °C – (0.0032% of T)	T ≥ 200 °C T < 200 °C	0.001% of span
Types S	0.015 °C 0.021 °C – (0.0032% of T)	T ≥ 200 °C T < 200 °C	0.001% of span
Type T	0.005 °C 0.005 °C + (0.0036% of absolute value) T)	T ≥ 0 °C T < 0 °C	0.001% of span
DIN Type L	0.0054 °C + (0.00029% of T) 0.0054 °C + (0.0025% of absolute value T)	T ≥ 0 °C T < 0 °C	0.001% of span
DIN Type U	0.0064 °C 0.0064 °C + (0.0043% of absolute value T)	T ≥ 0 °C T < 0 °C	0.001% of span
Type W5Re/W26Re	0.016 °C 0.023 °C + (0.0036% of T)	T ≥ 200 °C T < 200 °C	0.001% of span

Sensor options	Digital accuracy per 1.0 °C (1.8 °F) change in ambient[1]	Range	D/A effect[2]
GOST Type L	0.005 °C 0.005 °C + (0.003% of T)	T ³ 0 °C T < 0 °C	0.001% of span
Millivolt Input	0.00025 mV	Entire Sensor Input Range	0.001% of span
2-, 3-, 4-wire Ohm Input	0.007 ohms	Entire Sensor Input Range	0.001% of span

(1) Change in ambient is in reference to the calibration temperature of the transmitter (20 °C [68 °F]).
(2) Applies to HART / 4-20 mA devices.

Transmitters may be installed in locations where the ambient temperature is between –40 and 85 °C (–40 and 185 °F).

To maintain excellent accuracy performance, each transmitter is individually characterized over this ambient temperature range at the factory.

Temperature effects example

When using a Pt 100 (α = 0.00385) sensor input with a 0 to 100 °C span at 30 °C ambient temperature, the following statements would be true:

Digital temp effects

$$0.0015\frac{^\circ C}{^\circ C} \times (30^\circ - 20^\circ) = 0.015^\circ C$$

D/A effects (HART / 4–20 mA only)

$$0.001\frac{\%}{^\circ C} \text{ x Temperature Span } \text{x}|(\text{Amb Temp - Cal Temp})^\circ C| = \text{DA Effect}$$

$$0.001\frac{\%}{^\circ C} \text{x} 100^\circ C \text{ x}|(30 - 20)^\circ C| = ^\circ C \text{ DA Effect}$$

$$0.00001/_{^\circ C} \text{ X } 100^\circ C \text{ x}|(30 - 20)^\circ C| = 0.001^\circ C \text{ DA Effect}$$

Worst case error

Digital + D/A + Digital Temp Effects + D/A Effects = 0.10 °C + 0.02 °C + 0.015 °C + 0.01 °C

= 0.145 °C

Total probable error

$$\sqrt{0.10^2 + 0.02^2 + 0.015^2 + 0.01^2} = 0.10^\circ C$$

A.2 HART / 4–20 mA specifications

Power supply

External power supply is required. Transmitters operate on 12.0 to 42.4 Vdc transmitter terminal voltage (with 250 ohm load, 18.1 Vdc power supply voltage is required). Transmitter power terminals are rated to 42.4 Vdc.

Wiring diagram

See Figure A-1 on page 205.

Alarms

Custom factory configurations of alarm and saturation levels are available for valid values with option code C1. These values can also be configured in the field using a field communicator.

Transient protection (option code T1)

The transient protector helps prevent damage to the transmitter from transients induced on the loop wiring by lightning, welding, heavy electrical equipment, or switch gears. The transient protection electronics are contained in an add-on assembly that attaches to the standard transmitter terminal block. The external ground lug assembly (code G1) is included with the Transient Protector. The transient protector has been tested per the following standard:

- IEEE C62.41-1991 (IEEE 587)/ Location Categories B3.
  6kV/3kA peak (1.2 × 50 µS Wave 8 × 20 µS Combination Wave)
  6kV/0.5kA peak (100 kHz Ring Wave)
  EFT, 4kVpeak, 2.5kHz, 5*50nS
- Loop resistance added by protector: 22 ohms max.
- Nominal clamping voltages: 90 V (common mode), 77 V (normal mode)

LCD display

Optional five-digit LCD display includes 0–100% bar graph. Digits are 0.4 inches (8 mm) high. Display options include engineering units (°F, °C, °R, K, ohms, and millivolts), percent, and milliamperes. The display can also be set to alternate between engineering units/milliamperes, Sensor 1/Sensor 2, Sensor 1/Sensor 2/Differential Temperature, and Sensor 1/Sensor2/Average Temperature. All display options, including the decimal point, may be reconfigured in the field using a field communicator or AMS Device Manager.

Turn-on time

Specification performance is achieved less than six seconds after power is applied to the transmitter when the damping value is set to 0 seconds.

Power supply effect

Less than ±0.005% of span per volt.

SIS safety transmitter failure values

IEC 61508 Safety Certified SIL 2 Claim Limit

- Safety accuracy: Span ≥ 100 °C: ±2%(1) of process variable span
  Span < 100 °C: ± 2 °C
- Safety response time: 5 seconds

(1) A 2% variation of the transmitter mA output is allowed before a safety trip. Trip values in the DCS or safety logic solver should be derated by 2%.

Temperature limits

Description	Operating limit	Storage limit
Without LCD display	–40 to 185 °F –40 to 85 °C	–60 to 250 °F –50 to 120 °C
With LCD display Meter	–4 to 185 °F –20 to 85 °C	–50 to 185 °F –45 to 85 °C

Field communicator connections

Field communicator connections are permanently fixed to power/signal block.

Failure mode

The 3144P features software and hardware failure mode detection. An independent circuit is designed to provide backup alarm output if the microprocessor hardware or software fails.

The alarm level is user-selectable using the failure mode switch. If failure occurs, the position of the hardware switch determines the direction in which the output is driven (HIGH or LOW). The switch feeds into the digital-to-analog (D/A) converter, which drives the proper alarm output even if the microprocessor fails. The values at which the transmitter drives its output in failure mode depends on whether it is configured to standard, or NAMUR-compliant (NAMUR recommendation NE 43, 2003) operation. The values for standard and NAMUR-compliant operation are as follows:

Table A-2. Operation Parameters

	Standard (1)	NAMUR-Compliant(1)
Linear Output:	$3.9 \le I \le 20.5$	$3.8 \le I \le 20.5$
Fail HIGH:	$21.75 \le I \le 23$ (default)	$21.5 \le I \le 23$ (default)
Fail Low:	$I \le 3.75$	$I \le 3.6$

(1) Measured in milliamperes

Load limitations

Maximum Load = 40.8 X (Supply Voltage - 12.0)(1)

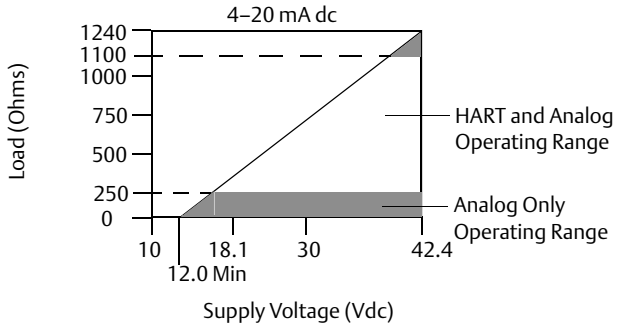

(1) Without transient protection (optional).

Note

HART Communication requires a loop resistance between 250 and 1100 ohms. Do not communicate with the transmitter when power is below 12 Vdc at the transmitter terminals.

A.3 FOUNDATION fieldbus specifications

Power supply

Powered over FOUNDATION fieldbus with standard fieldbus power supplies. Transmitters operate on 9.0 to 32.0 Vdc, 11 mA maximum. Transmitter power terminals are rated to 42.4 Vdc.

Wiring diagram

See Figure A-2 on page 205.

Alarms

The AI function block allows the user to configure the alarms to HIGH-HIGH, HIGH, LOW, or LOW-LOW with a variety of priority levels and hysteresis settings.

Transient protection (option code T1)

The transient protector helps prevent damage to the transmitter from transients induced on the loop wiring by lightning, welding, heavy electrical equipment, or switch gears. The transient protection electronics are contained in an add-on assembly that attaches to the standard

transmitter terminal block. The transient terminal block is not polarity insensitive. The transient protector has been tested to the following standard:

- IEEE C62.41-1991 (IEEE 587), Location Categories B3.
- Combinational Wave, 6kV/3kA peak, 1.2*50uS/8*20uS.
- Ring Wave, 100kHz, 6kV/0.5kA peak
- EFT, 4kV, 2.5kHz, 5*50nS
- Loop resistance added by protector: 22 ohms max.
- Nominal clamping voltages: 90 V (common mode), 77 V (normal mode)

Local display

Displays all DS_65 measurements in the transducer and function blocks including Sensor 1, Sensor 2, differential and terminal (body) temperatures. The display alternates up to four selected items and can display up to five digits in engineering units (°F, °C, °R, K, Ω, and millivolts). Display settings are configured at the factory according to the transmitter configuration (standard or custom), and these settings can be reconfigured in the field using a Field Communicator or DeltaV. In addition, the LCD display can display DS_65 parameters from other devices. Besides the configuration of the meter, sensor diagnostic data is displayed. If the measurement status is good, the measured value is shown. If the measurement status is uncertain, “uncertain” is shown in addition to the measured value. If the measurement status is Bad, the reason for the bad measurement is shown.

Note
When ordering a spare electronics module assembly, the LCD display transducer block will display the default parameter.

Turn-on time

Specification performance is achieved less than 20 seconds after power is applied to the transmitter when the damping value is set to 0 seconds.

Status

Device is compliant to NAMUR NE 107, ensuring consistent, reliable and standardized device diagnosti.c information.

The new standard is designed to improve the way device status and diagnostic information is communicated to operators and maintenance personnel in order to increase productivity and reduce costs

If self-diagnostics detect a sensor burnout or a transmitter failure, the status of the measurement will be updated accordingly. The status may also send the PID output to a safe value.

FOUNDATION fieldbus parameters

Schedule entries	25 (max.)
Links	30 (max.)
Virtual Communications Relationships (VCR)	20 (max.)

Backup Link Active Scheduler (LAS)

The transmitter is classified as a device link master, meaning it can function as a Link Active Scheduler (LAS) if the current link master device fails or is removed from the segment. The host or other configuration tool downloads the schedule for the application to the link master device. In the absence of a primary link master, the transmitter will claim the LAS and provide permanent control for the H1 segment.

Function blocks

Resource block

- Contains physical transmitter information including available memory, manufacture identification, device type, software tag, and unique identification
- PlantWeb™ Alerts enable the full power of the PW digital architecture by diagnosing instrumentation issues, communicating the details, and recommending a solution

Transducer block

- Contains the actual temperature measurement data, including Sensor 1, Sensor 2, and terminal (body) temperature
- Includes information about sensor type and configuration, engineering units, linearization, range, damping, and diagnostics

LCD display block (when an LCD display is used)

- Configures the local display

Analog input (AI)

- Processes the measurement and makes it available on the fieldbus segment
- Allows filtering, engineering unit, and alarm changes

PID block (provides control functionality)

- Performs single loop, cascade, or feedforward control in the field

Block	Execution time
Resource	–
Transducer	–
LCD display Block	–
Advanced Diagnostics	–
Analog Input 1, 2, 3	60 milliseconds
PID 1 and 2 with Autotune	90 milliseconds
Input Selector	65 milliseconds
Signal Characterizer	45 milliseconds
Arithmetic	60 milliseconds
Output Splitter	60 milliseconds

A.4 Dimensional drawings

Transmitter Exploded View

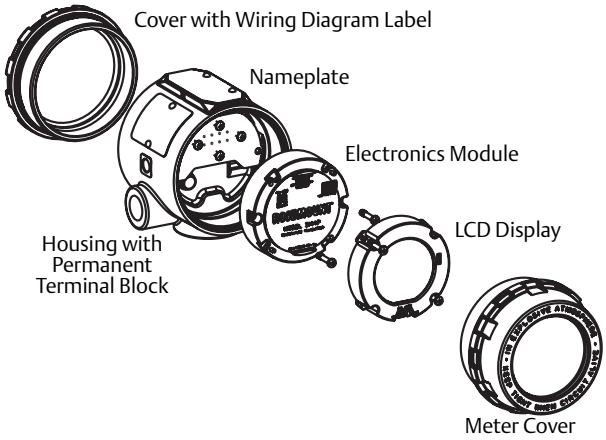

Switch Location

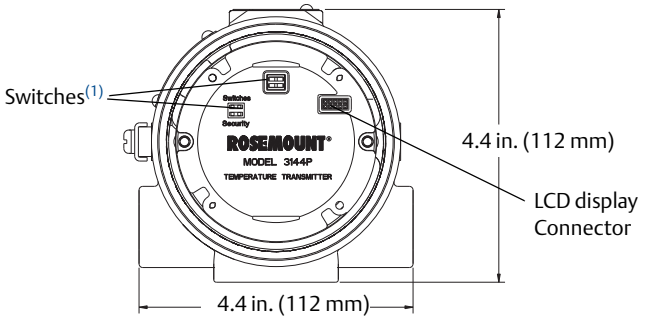

(1) Alarm and Write Protect (HART), Simulate and Write Protect (FOUNDATION fieldbus)

LCD Display Faceplate

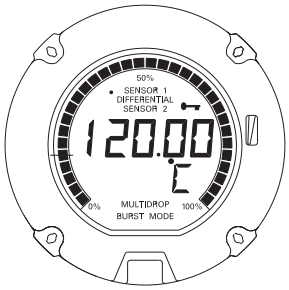

Transmitter Dimensional Drawing

Top view

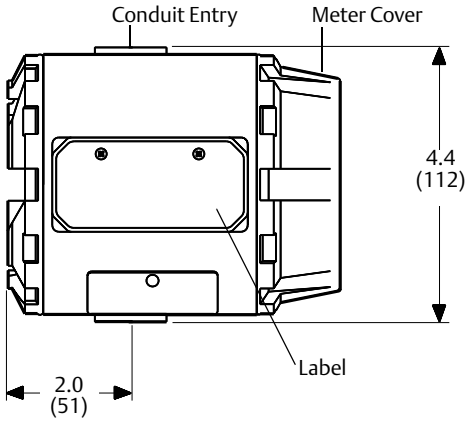

Side view

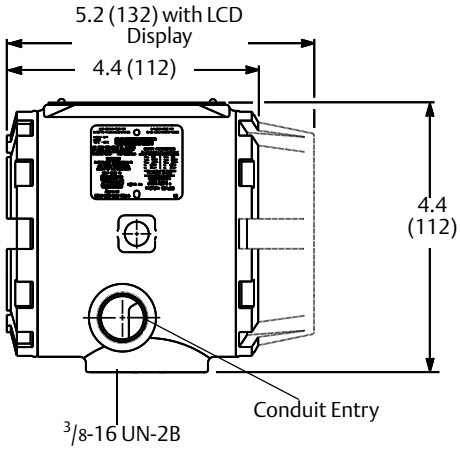

Dimensions are in inches (millimeters).

Transmitter Dimensional Drawing for Conduits with M20 x 1.5, PG 13.5, and JIS G1/2 Entries

Top view

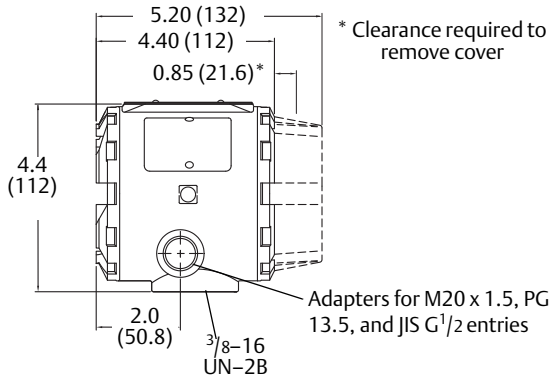

Front view

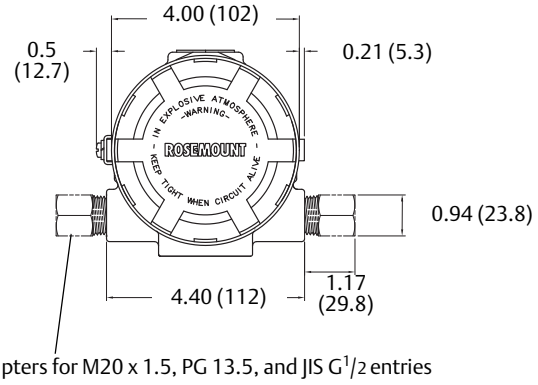

Dimensions are in inches (millimeters).

Optional Transmitter Mounting Brackets

Option Code B4 Bracket

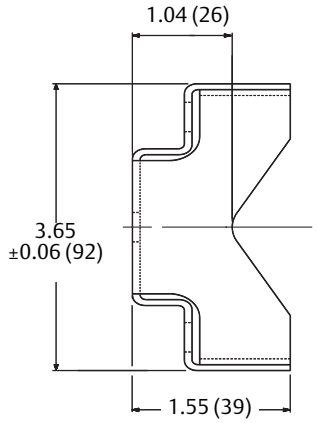

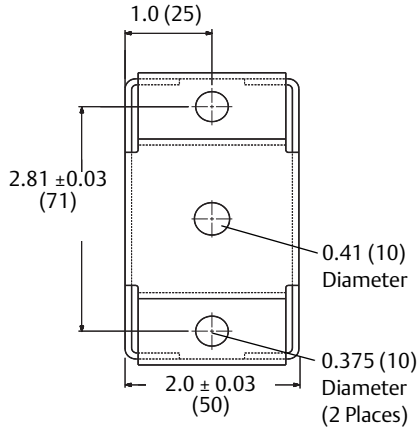

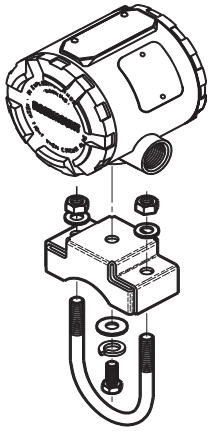

Option Code B5 Bracket

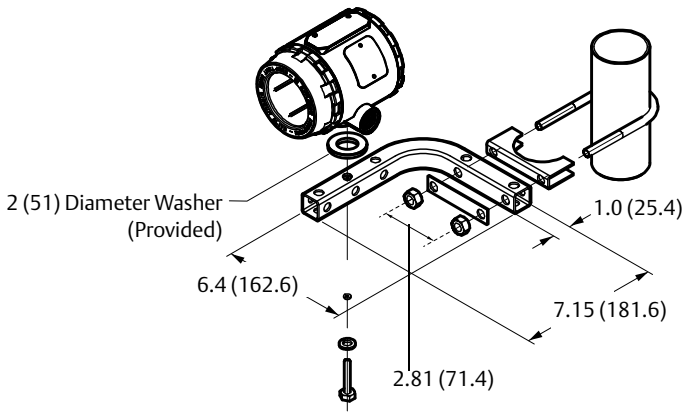

Dimensions are in inches (millimeters).

Figure A-1. HART / 4–20 mA Wiring Diagram

3144P Single-Sensor connections diagram

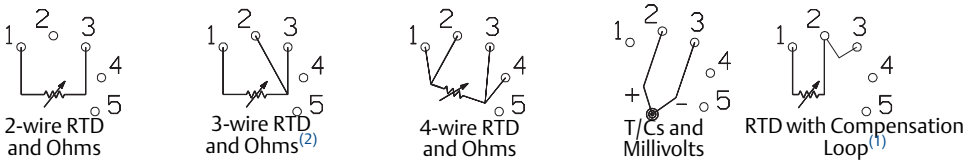

3144P Dual-Sensor connections diagram

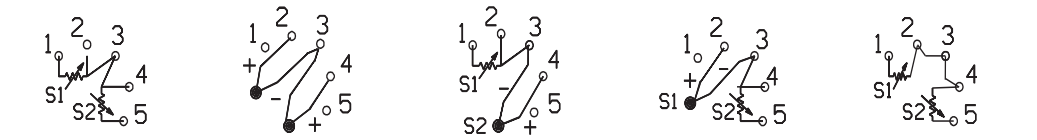

(1) Transmitter must be configured for a 3-wire RTD in order to recognize an RTD with a compensation loop.
(2) Emerson Process Management provides 4-wire sensors for all single-element RTDs. You can use these RTDs in 3-wire configurations by leaving the unneeded leads disconnected and insulated with electrical tape.

Figure A-2. FOUNDATION fieldbus Wiring Diagram

3144P Single-Sensor connections diagram

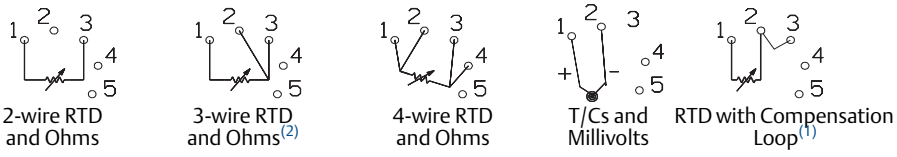

3144P Dual-Sensor connections diagram

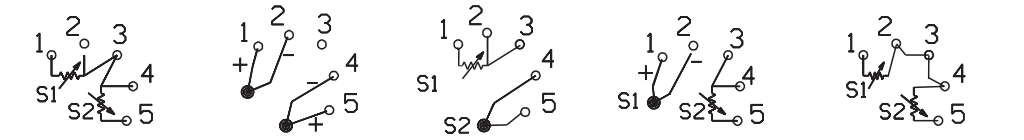

(1) Transmitter must be configured for a 3-wire RTD in order to recognize an RTD with a compensation loop.
(2) Emerson Process Management provides 4-wire sensors for all single-element RTDs. You can use these RTDs in 3-wire configurations by leaving the unneeded leads disconnected and insulated with electrical tape.

A.5 Ordering information

Table A-3. Rosemount® 3144P Temperature Transmitter Ordering Information

★ The Standard offering represents the most common options. The starred options (★) should be selected for best delivery. The Expanded offering is subject to additional delivery lead time.

Model	Product description			
3144P	Temperature Transmitter			
Housing style		**Material**	**Conduit entry size**	
Standard				**Standard**
D1	Field Mount Housing, Dual-Compartment Housing	Aluminum	1/2–14 NPT	★
D2	Field Mount Housing, Dual-Compartment Housing	Aluminum	M20 x 1.5 (CM20)	★
D3	Field Mount Housing, Dual-Compartment Housing	Aluminum	PG 13.5 (PG11)	★
D4	Field Mount Housing, Dual-Compartment Housing	Aluminum	JIS G 1/2	★
D5	Field Mount Housing, Dual-Compartment Housing	Stainless Steel	1/2–14 NPT	★
D6	Field Mount Housing, Dual-Compartment Housing	Stainless Steel	M20 x 1.5 (CM20)	★
D7	Field Mount Housing, Dual-Compartment Housing	Stainless Steel	PG 13.5 (PG11)	★
D8	Field Mount Housing, Dual-Compartment Housing	Stainless Steel	JIS G 1/2	★
Transmitter output				
Standard				**Standard**
A	4-20 mA with digital signal based on HART protocol			★
F	FOUNDATION fieldbus digital signal (includes 3 AI function block and Backup Link Active Scheduler)			★
Measurement configuration				
Standard				**Standard**
1	Single-Sensor Input			★
2	Dual-Sensor Input			★
Product certifications				
Standard				**Standard**
NA	No Approval			★
E5	FM Explosion-proof, Dust Ignition-Proof, and Non-incendive approval			★
I5(1)	FM Intrinsically Safe and Non-incendive (includes standard IS and FISCO for fieldbus units)			★
K5(1)	FM IS, Non-incendive & Explosion-proof combo (includes standard IS and FISCO for fieldbus units)			★
KB(1)	FM and CSA IS, Explosion-proof, and Non-incendive combo (includes standard IS and FISCO for FF units)			★
I6(1)	CSA Intrinsically Safe/FISCO and Division 2 (includes standard IS and FISCO for fieldbus units)			★
K6(1)	CSA IS, FISCO Division 2 and Explosion-proof combo (includes standard IS, FISCO for fieldbus units)			★
E1	ATEX Flameproof approval			★
N1	ATEX type n approval			★
I1(1)	ATEX intrinsic safety approval (includes standard IS and FISCO for fieldbus units)			★

Table A-3. Rosemount® 3144P Temperature Transmitter Ordering Information

★ The Standard offering represents the most common options. The starred options (★) should be selected for best delivery. The Expanded offering is subject to additional delivery lead time.

Product certifications		
Standard		**Standard**
K1[1]	ATEX IS, Flameproof, Dust Ignition-Proof and type n combo (includes standard IS and FISCO for fieldbus units)	★
ND	ATEX Dust Ignition-Proof approval	★
KA[1]	ATEX/CSA intrinsic safety, Explosion-proof combo (includes standard IS and FISCO for fieldbus units)	★
E7	IECEx Flameproof approval	★
N7	IECEx Type 'n' approval	★
I7[1][2]	IECEx Intrinsic Safety	★
K7[1][2]	IECEx Intrinsic Safety, Flameproof, Dust Ignition-Proof and Type n combination	★
E2[1]	INMETRO Flameproof	★
I2[1][5]	INMETRO Intrinsic safety	★
E4[2]	TIIS Flameproof approval	★
E3[2]	NEPSI Flameproof approval	★
I3[1][2]	NEPSI Intrinsic safety	★

Options (Include with selected model number)

PlantWeb control functionality		
Standard		**Standard**
A01	FOUNDATION fieldbus Advanced Control Function Block Suite	★
PlantWeb advanced diagnostic functionality		
Standard		**Standard**
D01	FOUNDATION fieldbus Sensor and Process Diagnostic Suite: Thermocouple Diagnostic, Min/Max Tracking	★
DA1	HART Sensor and Process Diagnostic Suite: Thermocouple Diagnostic, Min/Max Tracking	★
Enhanced performance		
Standard		**Standard**
P8	Enhanced Transmitter Accuracy	★
Mounting bracket		
Standard		**Standard**
B4	“U” Mounting Bracket for 2-inch pipe mounting - All SST	★
B5	“L” Mounting Bracket for 2-inch pipe or panel mounting - All SST	★
Display		
Standard		**Standard**
M5	LCD Display	★

Table A-3. Rosemount® 3144P Temperature Transmitter Ordering Information

★ The Standard offering represents the most common options. The starred options (★) should be selected for best delivery. The Expanded offering is subject to additional delivery lead time.

External ground		
Standard		**Standard**
G1	External Ground Lug Assembly (See "External ground screw assembly" on page 193.)	★
Transient protector		
Standard		**Standard**
T1	Integral Transient Protector	★
Software configuration		
Standard		**Standard**
C1[(2)]	Custom Configuration of Date, Descriptor and Message (Requires CDS with order)	★
Line filter		
Standard		**Standard**
F5	50 Hz Line Voltage Filter	★
Alarm level configuration		
Standard		**Standard**
A1	NAMUR Alarm and Saturation Levels, High Alarm	★
CN	NAMUR Alarm and Saturation Levels, Low Alarm	★
Low alarm		
Standard		**Standard**
C8	Low Alarm (Standard Rosemount Alarm and Saturation Values)	★
Sensor trim		
Standard		**Standard**
C2	Transmitter-Sensor Matching – Trim to PT100 RTD Calibration Schedule (CVD constants)	★
Expanded		**Expanded**
C7	Trim to Non-Standard Sensor (Special Sensor–Customer must provide sensor information)	
5-Point calibration		
Standard		**Standard**
C4	5-Point Calibration (Requires the Q4 option code to generate a Calibration Certificate)	★
Calibration certification		
Standard		**Standard**
Q4	Calibration Certificate (3-Point Calibration)	★
QP	Calibration Certificate and Tamper Evident Seal	★

Table A-3. Rosemount® 3144P Temperature Transmitter Ordering Information

★ The Standard offering represents the most common options. The starred options (★) should be selected for best delivery. The Expanded offering is subject to additional delivery lead time.

Dual-input custom configuration (only with measurement type Option Code 2)		
Standard		**Standard**
U1[3]	Hot Backup™	★
U2[4]	Average temperature with Hot Backup and Sensor Drift Alert – warning mode	★
U3[4]	Average temperature with Hot Backup and Sensor Drift Alert – alarm mode	★
U5	Differential temperature	★
U6[4]	Average temperature	★
U7[3]	First good temperature	★
Expanded		**Expanded**
U4	Two independent sensors	
Custody transfer		
Expanded		**Expanded**
D3	Custody Transfer Approval (Canada)	
D4	MID Custody Transfer (Europe)	
Quality certification for safety		
Standard		**Standard**
QS	Prior-use certificate of FMEDA data (HART Only)	★
QT	Safety-certified to IEC 61508 with certificate of FMEDA data (HART only)	★
Shipboard certification		
Standard		**Standard**
SBS	American Bureau of Shipping (ABS) Type Approval	★
SBV	Bureau Veritas (BV) Type Approval	★
SDN	Det Norske Veritas (DNV) Type Approval	★
SLL	Lloyd's Register (LR) Type Approval	★
Conduit electrical connector		
Standard		**Standard**
GE[5]	M12, 4-pin, Male Connector (*eurofast*®)	★
GM[5]	A size Mini, 4-pin, Male Connector (*minifast*®)	★
HART Revision configuration		
Standard		**Standard**
HR7	Configured for HART Revision 7	★

Table A-3. Rosemount® 3144P Temperature Transmitter Ordering Information

★ The Standard offering represents the most common options. The starred options (★) should be selected for best delivery. The Expanded offering is subject to additional delivery lead time.

Assemble to options		
Standard		**Standard**
XA	Sensor Specified Separately and Assembled to Transmitter	★
Typical model number: 3144P D1 A 1 E5 B4 M5		

(1) Consult factory for availability when ordering with HART or FOUNDATION fieldbus models.
(2) Consult factory for availability when ordering with FOUNDATION fieldbus models.
(3) Codes U1 and U6 for HART transmitters will not have drift alert enabled; option codes U1, U6, U7, U8, and U9 for FOUNDATION fieldbus transmitters will have drift alert enabled.
(4) Not available for FOUNDATION fieldbus.
(5) Available with Intrinsically Safe approvals only. For FM Intrinsically Safe or non-incendive approval (option code I5), install in accordance with Rosemount drawing 03151-1009 to maintain 4X rating.

A.6 Spare parts list

Parts description	Part number
Electronics module	
Rosemount 3144P Hart Electronics Spare Kit	03144-3111-0007
Rosemount 3144P Hart SIS Electronics Spare Kit	03144-3111-1007
Rosemount 3144P Fieldbus Device Rev. 2 Electronic Spare Kit (Configured as Single Sensor)	03144-5601-0003
M5 meter kit (Includes meter display, captive mounting hardware, 10-pin interconnection header and cover)	
M5 Meter Kit - Aluminum	03144-3120-0001
M5 Meter Kit - Stainless Steel	03144-3120-0011
Meter (includes meter, captive mounting hardware, and 10-pin interconnection header)	03144-3120-0002
Meter cover kit	
Aluminum Meter Cover Kit (includes cover and O-ring)	03144-1043-0001
Mounting bracket kit	
B4 Mounting Bracket Kit SST	03044-2131-0001
B5 Mounting Bracket Kit SST	03144-1081-0001
B5 Mounting Bracket Kit 316 SST	03144-1081-1001
Housing cover (Includes O-ring and wiring diagram label)	
Rosemount 3144P Aluminum Housing Cover	03144-1142-0001
Rosemount 3144P Stainless Steel Housing Cover	03144-1142-0002
O-ring for cover (pkg of 12)	01151-0033-0003
Housing kit (does not include covers)	
Rosemount 3144P Aluminum Housing Kit	03144-1141-0001
Rosemount 3144P Aluminum Housing Kit with External Ground Lug Assembly	03144-1141-0002
Rosemount 3144P Stainless Steel Housing Kit	03144-1141-0003
Rosemount 3144P Stainless Steel Housing Kit with External Ground Lug Assembly	03144-1141-0004
Rosemount 3144P Cover Clamp Kit	03144-1048-0001
Screw/Washer combination for Sensor/ Power Terminals (pkg of 12)	03144-1044-0001
Jumper (10 pin) - Meter interconnection header (pkg of 12)	03144-1146-0001
External Ground Lug Assembly (includes all hardware to be used with existing ground lug installed in transmitter - including knurled insert)	03144-1047-0001
Integral Transient Protector Kit - HART Only (includes terminal screws, transient protector and external ground lug assembly)	03144-3045-0001
Integral Transient Protector Kit - Fieldbus Only (includes terminal screws, transient protector and external ground lug assembly)	03144-3045-0002

Standard configuration

Both standard and custom configuration settings may be changed. Unless specified, the transmitter will be shipped as follows:

Standard configuration	Description
4 mA value / Lower Range (HART / 4–20 mA)	0 °C
20 mA value / Upper Range (HART / 4–20 mA)	100 °C
Damping	5 seconds
Output	Linear with temperature / FOUNDATION fieldbus
Failure Mode (HART / 4–20 mA)	High
Line Voltage Filter	60 Hz
Software Tag	If a Hardware Tag is specified it will be entered into the software tag as well. Otherwise it will be left blank.
Optional Integral Meter	Units and mA / Sensor 1 units
Single sensor option	**Description**
Sensor Type	4-wire Pt 100 α = 0.00385 RTD
Primary Variable (HART / 4–20 mA)	Sensor 1
Secondary Variable	Terminal (Body) Temperature
Tertiary Variable	Not Available
Quaternary Variable	Not Available
Dual sensor option	**Description**
Sensor Type	Two 3-wire Pt 100 α = 0.00385 RTD
Primary Variable (HART / 4–20 mA)	Sensor 1
Secondary Variable	Sensor 2
Tertiary Variable	Terminal Temperature
Quaternary Variable	Not Used

Custom configuration

The 3144P transmitter can be ordered with custom configuration. The table below lists the requirements necessary to specify a custom configuration.

Option code	Requirements/specifications
C1: Factory Data[(1)]	Date: day/month/year Descriptor: 32 alphanumeric character Message: 32 alphanumeric character Custom Alarm Levels can be specified for configuration at the factory.
C2: Transmitter-Sensor Matching	The transmitters are designed to accept Callendar-van Dusen constants from a calibrated RTD schedule and generate a custom curve to match any specific sensor curve. Specify a Series 68, 65, or 78 RTD sensor on the order with a special characterization curve (V or X8Q4 option). These constants will be programmed into the transmitter with this option.
C4: Five Point Calibration	Will include five-point calibration at 0, 25, 50, 75, and 100% analog and digital output points. Use with option code Q4 to obtain a Calibration Certificate.
C7: Special Sensor	Used for non-standard sensor, adding a special sensor or expanding input. Customer must supply the non-standard sensor information. Additional special curve will be added to sensor curve input choices.
A1: NAMUR-Compliant, high alarm	Analog output levels compliant with NAMUR. Alarm is set to fail high.
CN: NAMUR-Compliant, low alarm	Analog output levels compliant with NAMUR. Alarm is set to fail low.
C8: Low Alarm	Analog output levels compliant with Rosemount standard. Alarm is set to fail low.
F5: 50 Hz Line Filter	Calibrated to 50 Hz line voltage filter.

(1)CDS required

To custom configure the 3144P with the dual-sensor option transmitter for one of the applications described below, indicate the appropriate option code in the model number. If a sensor type is not specified, the transmitter will be configured for two 3-wire Pt 100 (α = 0.00385) RTDs if any of the following option codes are selected.

Option Code U1 **Hot Backup configuration**	
Primary Usage	Primary usage sets the transmitter to automatically use sensor 2 as the primary input if sensor 1 fails. Switching from sensor 1 to sensor 2 is accomplished without any effect on the analog signal.
Primary Variable	Sensor 1
Secondary Variable	Sensor 2
Tertiary Variable	Terminal (Body) Temperature
Quaternary Variable	Not Used

Option Code U2 **Average temperature with Hot Backup and sensor drift alert – Warning Mode**	
Primary Usage	Critical applications, such as safety interlocks and control loops. Outputs the average of two measurements and alerts if temperature difference exceeds the set maximum differential (Sensor Drift Alert). If a sensor fails, an alert will be sent and the primary variable will hold working sensor measurement.
Primary Variable	Sensor Average
Secondary Variable	Sensor 1
Tertiary Variable	Sensor 2
Quaternary Variable	Terminal Temperature

Option Code U3 **Average temperature with Hot Backup and sensor drift alert – Alarm Mode**	
Primary Usage	Critical applications, such as safety interlocks and control loops. Outputs the average of two measurements and alerts if temperature difference exceeds the set maximum differential (Sensor Drift Alert).
Primary Variable	Sensor Average
Secondary Variable	Sensor 1
Tertiary Variable	Sensor 2
Quaternary Variable	Terminal Temperature

Option Code U4 **Two independent sensors**	
Primary Usage	Used in non-critical applications where the digital output is used to measure two separate process temperatures.
Primary Variable	Sensor 1
Secondary Variable	Sensor 2
Tertiary Variable	Terminal Temperature
Quaternary Variable	Not Used

Option Code U5 **Differential temperature**	
Primary Usage	The differential temperature of two process temperatures are configured as the primary variable.
Primary Variable	Differential Temperature
Secondary Variable	Sensor 1
Tertiary Variable	Sensor 2
Quaternary Variable	Terminal Temperature

Appendix B Product Certifications

Approved Manufacturing Locations . . . . . page 217
European Directive Information . . . . . page 217
Ordinary Location Certification from FM Approvals . . . . . page 217
Installation Drawings . . . . . page 226

B.1 Approved Manufacturing Locations

Rosemount Inc. – Chanhassen, Minnesota, USA

Rosemount Temperature GmbH – Germany

Emerson Process Management Asia Pacific – Singapore

B.2 European Directive Information

A copy of the EC Declaration of Conformity can be found at the end of the Quick Start Guide. The most recent revision of the EC Declaration of Conformity can be found at www.rosemount.com.

B.3 Ordinary Location Certification from FM Approvals

As standard, the transmitter has been examined and tested to determine that the design meets the basic electrical, mechanical, and fire protection requirements by FM Approvals, a nationally recognized test laboratory (NRTL) as accredited by the Federal Occupational Safety and Health Administration (OSHA).

North America

E5 FM Explosionproof, Dust-Ignitionproof, and Nonincendive
Certificate: 3012752
Standards Used: FM Class 3600: 1998, FM Class 3611: 2004, FM Class 3615: 1989, FM Class 3810: 2005, NEMA-250: 1991, ANSI/ISA 60079-0: 2009, ANSI/ISA 60079-11: 2009
Markings: **XP** CL I, DIV 1, GP A, B, C, D; T5(–50 °C ≤ T_a ≤ +85 °C); **DIP** CL II/III, DIV 1, GP E, F, G; T5(–50 °C ≤ T_a ≤ +75 °C); T6(–50 °C ≤ T_a ≤ +60 °C); when installed per Rosemount drawing 03144-0320; **NI** CL I, DIV 2, GP A, B, C, D; T5(–60 °C ≤ T_a ≤ +75 °C); T6(–60 °C ≤ T_a ≤ +50 °C); when installed per Rosemount drawing 03144-0321, 03144-5075;

I5 FM Intrinsic Safety and Nonincendive
Certificate: 3012752
Standards Used: FM Class 3600: 1998, FM Class 3610: 2010, FM Class 3611: 2004, FM Class 3810: 2005, NEMA-250: 1991, ANSI/ISA 60079-0: 2009, ANSI/ISA 60079-11: 2009
Markings: **IS** CL I / II / III, DIV 1, GP A, B, C, D, E, F, G; T4 (–60 °C ≤ T_a ≤ +60 °C); **IS** [Entity] CL I, Zone 0, AEx ia IIC T4(–60 °C ≤ T_a ≤ +60 °C); **NI** CL I, DIV 2, GP A, B, C, D; T5(–60 °C ≤ T_a ≤ +75 °C); T6(–60 °C ≤ T_a ≤ +50 °C); when installed per Rosemount drawing 03144-0321, 03144-5075;

I6 CSA Intrinsic Safety and Division 2
Certificate: 1242650
Standards Used: CAN/CSA C22.2 No. 0-M91 (R2001), CAN/CSA-C22.2 No. 94-M91, CSA Std C22.2 No. 142-M1987, CAN/CSA-C22.2 No. 157-92, CSA Std C22.2 No. 213-M1987;
Markings: Intrinsically Safe for Class I Groups A, B, C, D; Class II, Groups E, F, G; Class III;
[HART only zone markings]: Intrinsically Safe for Class I Zone 0 Group IIC;
T4(–50 °C ≤ T_a ≤ +60 °C); Type 4X; Suitable for Class I, Div. 2, Groups A, B, C, D;
[HART only zone markings]: Suitable for Class I Zone 2 Group IIC; T6(–60 °C ≤ T_a ≤ +60 °C); T5 (–60 °C ≤ T_a ≤ +85 °C); when installed per Rosemount drawing 03144-5076;

K6 CSA Explosionproof, Intrinsic Safety and Division 2
Certificate: 1242650
Standards Used: CAN/CSA C22.2 No. 0-M91 (R2001), CSA Std C22.2 No. 30-M1986; CAN/CSA-C22.2 No. 94-M91, CSA Std C22.2 No. 142-M1987, CAN/CSA-C22.2 No. 157-92, CSA Std C22.2 No. 213-M1987;
Markings: Explosionproof for Class I, Groups A, B, C, D; Class II, Groups E, F, G; Class III;
[HART only zone markings]: Suitable for Class I Zone 1 Group IIC; Intrinsically Safe for Class I Groups A, B, C, D; Class II, Groups E, F, G; Class III;
[HART only zone markings]: Suitable for Class I Zone 0 Group IIC; T4(–50 °C ≤ T_a ≤ +60 °C); Type 4X; Suitable for Class I, Div. 2, Groups A, B, C, D;
[HART only zone markings]: Suitable for Class I Zone 2 Group IIC; T6(–60 °C ≤ T_a ≤ +60 °C); T5(–60 °C ≤ T_a ≤ +85 °C); when installed per Rosemount drawing 03144-5076;

Europe

E1 ATEX Flameproof
Certificate: FM12ATEX0065X
Standards Used: EN 60079-0: 2012, EN 60079-1: 2007, EN 60529:1991 +A1:2000
Markings: ⟨Ex⟩ II 2 G Ex d IIC T6...T1 Gb, T6(–50 °C ≤ T_a ≤ +40 °C), T5...T1(–50 °C ≤ T_a ≤ +60 °C);
See Table B-2 at the end of the Product Certifications section for process temperatures.

Special Conditions for Safe Use (X):

1. See certificate for ambient temperature range.
2. The non-metallic label may store an electrostatic charge and become a source of ignition in Group III environments.
3. Guard the LCD display cover against impact energies greater than 4 joules.
4. Consult the manufacturer if dimensional information on the flameproof joints is necessary.

I1 ATEX Intrinsic Safety
Certificate: BAS01ATEX1431X [HART]; Baseefa03ATEX0708X [Fieldbus];
Standards Used: EN 60079-0: 2012; EN 60079-11: 2012;
Markings: HART: ⟨Ex⟩ II 1 G Ex ia IIC T5/T6 Ga; T6(–60 °C ≤ T_a ≤ +50 °C), T5(–60 °C ≤ T_a ≤ +75 °C); Fieldbus: ⟨Ex⟩ II 1 G Ex ia IIC T4 Ga; T4(–60 °C ≤ T_a ≤ +60 °C)
See Table B-3 at the end of the Product Certifications section for Entity Parameters.

Special Conditions for Safe Use (X):

1. When fitted with the transient terminal options, the equipment is not capable of passing the 500 V insulation test. This must be taken into account during installation.
2. The enclosure may be made from aluminum alloy with a protective polyurethane paint finish; however, care should be taken to protect it from impact or abrasion when located in Zone 0.

N1 ATEX Type n
Certificate: BAS01ATEX3432X [HART]; Baseefa03ATEX0709X [Fieldbus]
Standards Used: EN 60079-0: 2012, EN 60079-15: 2010
Markings: HART: ⟨Ex⟩ II 3G Ex nA IIC T5/T6 Gc; T6(–40 °C ≤ T_a ≤ +50 °C), T5(–40 °C ≤ T_a ≤ +75 °C); Fieldbus: ⟨Ex⟩ II 3G Ex nA IIC T5 Gc; T5(–40 °C ≤ T_a ≤ +75 °C);

Special Condition for Safe Use (X):

1. When fitted with the transient terminal options, the equipment is not capable of withstanding the 500 V electrical strength test as defined in clause 6.5.1 of EN 60079-15: 2010. This must be taken into account during installation.

ND ATEX Dust
Certificate Number: FM12ATEX0065X
Standards Used: EN 60079-0: 2012, EN 60079-31: 2009, EN 60529:1991 +A1:2000
Markings: ⟨Ex⟩ II 2D Ex tb IIIC T130 °C Db, (–40 °C ≤ T_a ≤ +70 °C); IP66
See Table B-2 at the end of the Product Certifications section for process temperatures.

Special Conditions for Safe Use (X):

1. See certificate for ambient temperature range.
2. The non-metallic label may store an electrostatic charge and become a source of ignition in Group III environments.
3. Guard the LCD display cover against impact energies greater than 4 joules.
4. Consult the manufacturer if dimensional information on the flameproof joints is necessary.

International

E7 IECEx Flameproof
Certificate: IECEx FMG 12.0022X
Standards Used: IEC 60079-0:2011, IEC 60079-1: 2007-04, IEC 60079-31: 2008
Markings: Ex d IIC T6...T1 Gb, T6(–50 °C ≤ T_a ≤ +40 °C), T5...T1(–50 °C ≤ T_a ≤ +60 °C);
Ex tb IIIC T130 °C Db, (–40 °C ≤ T_a ≤ +70 °C); IP66;
See Table B-2 at the end of the Product Certifications section for process temperatures.

Special Conditions for Safe Use (X):

1. See certificate for ambient temperature range.
2. The non-metallic label may store an electrostatic charge and become a source of ignition in Group III environments.
3. Guard the LCD display cover against impact energies greater than 4 joules.
4. Consult the manufacturer if dimensional information on the flameproof joints is necessary.

I7 IECEx Intrinsic Safety
Certificate: IECEx BAS 07.0002X [HART]; IECEx BAS 07.0004X [Fieldbus]
Standards Used: IEC 60079-0: 2011; IEC 60079-11: 2011;
Markings: HART: Ex ia IIC T5/T6 Ga; T6(–60 °C ≤ T_a ≤ +50 °C), T5(–60 °C ≤ T_a ≤ +75 °C);
Fieldbus: Ex ia IIC T5/T6 Ga; T4(–60 °C ≤ T_a ≤ +60 °C)
See Table B-3 at the end of the Product Certifications section for entity parameters.

Special Conditions for Safe Use (X):

1. When fitted with the transient terminal options, the apparatus is not capable of withstanding the 500 V electrical strength test as defined in Clause 6.3.13 of IEC 60079-11: 2011. This must be taken into account during installation.
2. The enclosure may be made from aluminum alloy with a protective polyurethane paint finish; however, care should be taken to protect it from impact or abrasion when located in Zone 0.

N7 IECEx Type n
Certificate: IECEx BAS 070003X [HART]; IECEx BAS 07.0005X [Fieldbus]
Standards Used: IEC 60079-0: 2011, IEC 60079-15: 2010
Markings: HART: Ex nA IIC T5/T6 Gc; T6(–40 °C ≤ T_a ≤ +50 °C), T5(–40 °C ≤ T_a ≤ +75 °C);
Fiedlbus: Ex nA IIC T5 Gc; T5(–40 °C ≤ T_a ≤ +75 °C);

Brazil

E2 INMETRO Flameproof
Certificate: CEPEL 04.0307X
Standards Used: ABNT NBR IEC 60079-0:2008, ABNT NBR IEC 60079-1:2009, ABNT NBR IEC 60079-26:2008, ABNT NBR IEC 60529:2009
Markings: Ex d IIC T* Gb; T6(–40 °C ≤ T_a ≤ +65 °C), T5(–40 °C ≤ T_a ≤ +80 °C)

Special Conditions for Safe Use (X):

1. The accessory of cable entries or conduit must be certified as flameproof and needs to be suitable for use conditions.
2. For ambient temperature above 60 °C, cable wiring must have minimum isolation for temperature 90 °C, to be in accordance to equipment operation temperature.
3. Where electrical entry is via conduit, the required sealing device must be assembled immediately close to enclosure.

I2 INMETRO Intrinsic Safety
Certificate: CEPEL 05.0723X
Standards Used: ABNT NBR IEC 60079-0:2008, ABNT NBR IEC 60079-11:2009, ABNT NBR IEC 60079-26:2008, ABNT NBR IEC 60529:2009
Markings: Ex ia IIC T* Ga; T6(–60 °C ≤ T_a ≤ +50 °C), T5(–60 °C ≤ T_a ≤ 75 °C),
T4(–60 °C ≤ T_a ≤ +60 °C); IP66(Aluminum enclosures), IP66W (Stainless Steel enclosures)
See Table B-3 at the end of the Product Certifications section for entity parameters.

Special Conditions for Safe Use (X):

1. The apparatus enclosure may contain light metals. The apparatus must be installed in such a manner as to minimize the risk of impact or friction with other metal surfaces.
2. A transient protection device can be fitted as an option, in which the equipment will not pass the 500 V test.

China

E3 China Flameproof
Certificate: GYJ11.1650X
Standards Used: GB3836.1-2000, GB3836.2-2010
Markings: Ex d IIC T5/T6 Gb

Special Conditions for Safe Use (X):

1. Symbol "X" is used to denote specific conditions of use: For information on the dimensions of the flameproof joints the manufacturer shall be contacted. This shall be mentioned in the manual.
2. Relation between T code and ambient temperature range is:

T Code	Ambient temperature
T6	$-40\ °C \le T_a \le +70\ °C$
T5	$-40\ °C \le T_a \le +80\ °C$

3. The earth connection facility in the enclosure should be connected reliably.
4. During installation, there should be no mixture harmful to flameproof housing.
5. During installation in hazardous location, Cable glands, conduits and blanking plugs, certified by state-appointed inspection bodies with Ex d IIC Gb degree, should be used.
6. During installation, use and maintenance in explosive gas atmospheres, observe the warning "Do not open when energized".
7. End users are not permitted to change any components insides, but to settle the problem in conjunction with manufacturer to avoid damage to the product.
8. When installation, use and maintenance of this product, observe following standards:

   GB3836.13-1997 "Electrical apparatus for explosive gas atmospheres Part 13: Repair and overhaul for apparatus used in explosive gas atmospheres"

   GB3836.15-2000 "Electrical apparatus for explosive gas atmospheres Part 15: Electrical installations in hazardous area (other than mines)"

   GB3836.16-2006 "Electrical apparatus for explosive gas atmospheres Part 16: Inspection and maintenance of electrical installation (other than mines)"

   GB50257-1996 "Code for construction and acceptance of electric device for explosion atmospheres and fire hazard electrical equipment installation engineering"

I3 China Intrinsic Safety
Certificate: GYJ11.1536X
Standards Used: GB3836.1-2000, GB3836.4-2010
Markings: Ex ia IIC T4/T5/T6

Special Conditions for Safe Use (X):

1. Symbol "X" is used to denote specific conditions of use:
   a. The enclosure may contain light metal, attention should be taken to avoid ignition hazard due to impact or friction when used in Zone 0.
   b. When fitted with the "Transient Terminal Option", this apparatus is not capable of withstanding the 500V r.m.s. insulation test required by Clause 6.3.12 of GB3836.4-2010.

2. Relation between T code and ambient temperature range is:

Output	T Code	Ambient temperature
HART	T6	$-60\ °C \le T_a \le +50\ °C$
	T5	$-60\ °C \le T_a \le +70\ °C$
Fieldbus	T4	$-60\ °C \le T_a \le +60\ °C$

3. Parameters:

Power/Loop terminals (+ and -)

Output	Maximum input voltage	Maximum input current	Maximum input power	Maximum internal parameters	
	U_i (V)	I_i (mA)	P_i (W)	C_i (nF)	L_i (µH)
HART	30	300	1	5	0
Fieldbus	30	300	1.3	2.1	0

Sensor terminal (1 to 5)

Output	Maximum input voltage	Maximum input current	Maximum input power	Maximum internal parameters	
	U_o (V)	I_o (mA)	P_o (W)	C_i (nF)	L_i (µH)
HART	13.6	56	0.19	78	0
Fieldbus	13.9	23	0.079	7.7	0

Load connected to sensor terminals (1 to 5)

Output	Group	Maximum external parameters	
		C_o (µF)	L_o (mH)
HART	IIC	0.74	11.7
	IIB	5.12	44
	IIA	18.52	94
Fieldbus	IIC	0.73	30.2
	IIB	4.8	110.9
	IIA	17.69	231.2

Temperature transmitters comply to the requirements for FISCO field devices specified in GB3836.19-2010. FISCO parameters are as follows:

Maximum input voltage	Maximum input current	Maximum input power	Maximum internal parameters	
U_i (V)	I_i (mA)	P_i (W)	C_i (nF)	L_i (µH)
17.5	380	5.32	2.1	0

4. The product should be used with Ex-certified associated apparatus to establish explosion protection system that can be used in explosive gas atmospheres. Wiring and terminals should comply with the instruction manual of the product and associated apparatus.

5. The cables between this product and associated apparatus should be shielded cables (the cables must have insulated shield). The shielded cable has to be grounded reliably in non-hazardous area.

6. End users are not permitted to change any components insides, but to settle the problem in conjunction with manufacturer to avoid damage to the product.

7. When installation, use and maintenance of this product, observe following standards:

   GB3836.13-1997 “Electrical apparatus for explosive gas atmospheres Part 13: Repair and overhaul for apparatus used in explosive gas atmospheres”

   GB3836.15-2000 “Electrical apparatus for explosive gas atmospheres Part 15: Electrical installations in hazardous area (other than mines)”

   GB3836.6-2006 “Electrical apparatus for explosive gas atmospheres Part 16: Inspection and maintenance of electrical installation (other than mines)”

   GB50257-1996 “Code for construction and acceptance of electric device for explosion atmospheres and fire hazard electrical equipment installation engineering”

Japan

E4 TIIS Flameproof
Certificate: TC16120, TC16121
Markings: Ex d IIb T6 (-20 °C ≤ T_a ≤ +55 °C)

Certificate: TC16127, TC16128, TC16129, TC16130
Markings: Ex d IIb T4 (-20 °C ≤ T_a ≤ +55 °C)

Combinations

K1 Combination of E1, I1, N1, and ND
K2 Combination of E2 and I2
K5 Combination of E5 and I5
K7 Combination of E7, I7, and N7
KA Combination of K1and K6
KB Combination of K5, I6, and K6

Additional certifications

SBS American Bureau of Shipping (ABS) Type Approval
Certificate Number: 02-HS289101/1-PDA

Intended Service: Measurement of temperature applications on ABS Classed Vessels, Marine and Offshore installations.

ABS Rule: 2009 Steel Vessels Rules: 1-1-4/7.7. 4-8-3/1.11, 4-8-3/13.1, 4-8-3/13.3; 2008 MODU Rules 4-3-3/3.1.1, 4-3-3-/9.3.1, 4-3-3/9.3.2

SBV Bureau Veritas (BV) Type Approval Shipboard

Certificate: 23154/AO BV

Requirements: Bureau Veritas Rules for the Classification of Steel Ship

Application: Approval valid for ships intended to be granted with the following additional class notations: AUT-UMS, AUT-CCS, AUT-PORT and AUT-IMS. Cannot be installed on diesel engines.

SDN Det Norske Veritas (DNV) Type Approval Certificate

Certificate: A-12019

Intended Service: The Rosemount 3144P is found to comply with Det Norske Veritas' Rules for Classification of Ships, High Speed & Light Craft and Det Norske Veritas' Offshore Standards.

Table B-1. Applications

Location	Class
Temperature	D
Humidity	B
Vibration	A
EMC	A
Enclosure	D

SLL Lloyd's Register Type Approval Certificate

Certificate: 11/60002

Application: Marine, offshore and industrial use. Suitable for use in environmental categories ENV1, ENV2, ENV3 and ENV5 as defined in LR Test Specification No. 1: 2002.

GOSTANDART

Tested and approved by Russian Metrological Institute.

Measuring Instruments Directive Parts Certification

The Rosemount 3144P Temperature Transmitter and Rosemount 0065 RTD Temperature Sensor have been certified to meet the European Union Measurement Instrument Directive (MID) for Custody Transfer metering of liquids and gases.(1) Choosing Rosemount Temperature for a MID solution ensures that critical temperature measurement equipment will meet high expectations for unmatched system accuracy and reliability. For more information, please contact your local Emerson Process Management Representative.

(1) Limited global availability. Consult factory for available ordering locations.

Tables

Table B-2. Process Temperatures

Temperature class	Ambient temperature	Process temperature w/o LCD display cover (°C)			
		No ext.	3 in.	6 in.	9 in.
T6	– 50 °C to +40 °C	55	55	60	65
T5	– 50 °C to +60 °C	70	70	70	75
T4	– 50 °C to +60 °C	100	110	120	130
T3	– 50 °C to +60 °C	170	190	200	200
T2	– 50 °C to +60 °C	280	300	300	300
T1	– 50 °C to +60 °C	440	450	450	450

Table B-3. Entity Parameters

	Fieldbus/Profibus	HART 5
Voltage U_i (V)	30	30
Current I_i (mA)	300	300
Power P_i (W)	1	1.3
Capacitance C_i (nF)	5	2.1
Inductance L_i (mH)	0	0

Figure B-1. FM Intrinsically Safe (Fieldbus) Installation Drawing 03144-5075, Rev. AD

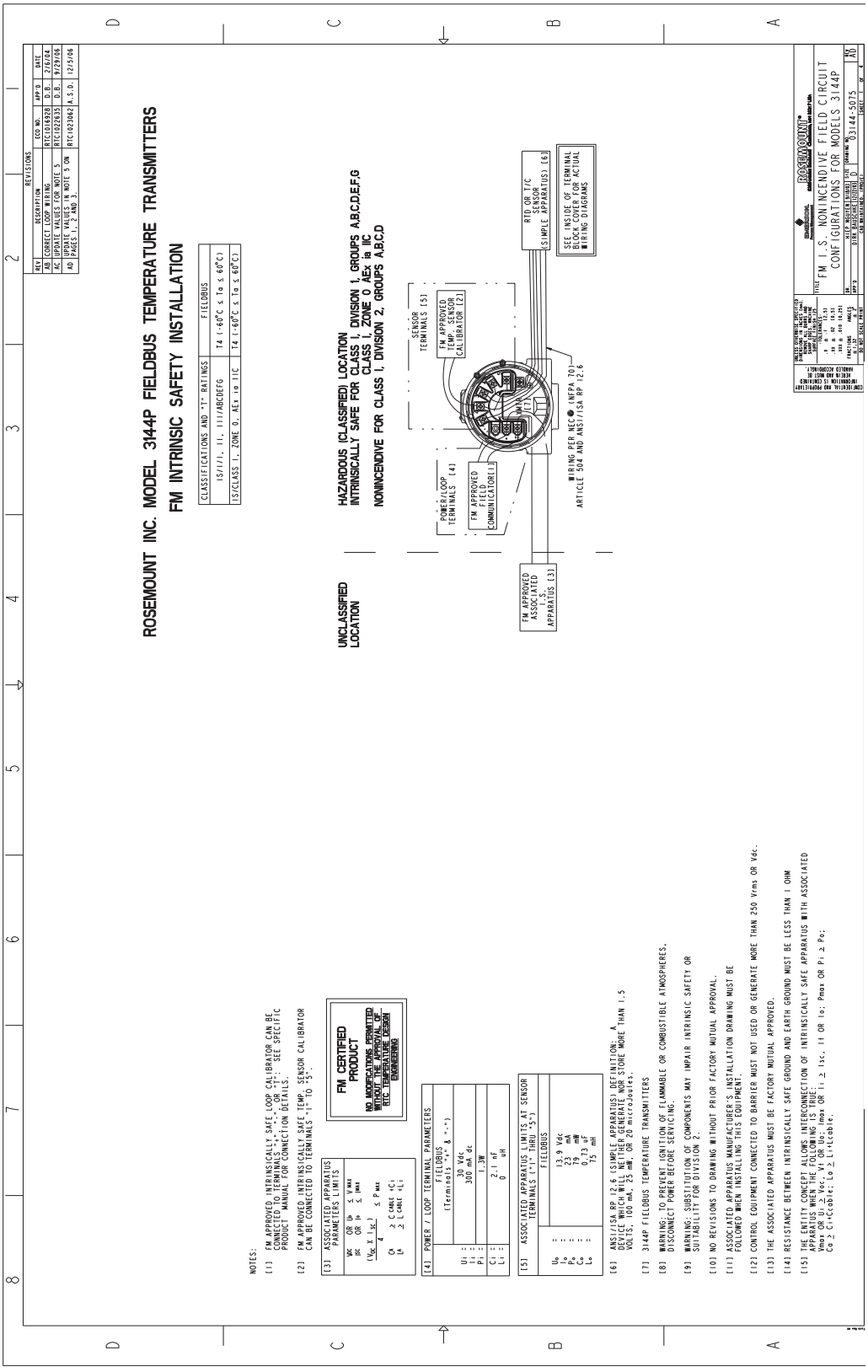

ROSEMOUNT INC. MODEL 3144P FIELDBUS TEMPERATURE TRANSMITTERS
FM FISCO SAFETY INSTALLATION

CLASSIFICATIONS AND "T" RATINGS	FIELDBUS
IS/I/I, II, III/ABCDEFG	T4 (-60°C ≤ Ta ≤ 60°C)
IS/CLASS I, ZONE 0, AEx ia IIC	T4 (-60°C ≤ Ta ≤ 60°C)

NOTES:

[1] FM APPROVED INTRINSICALLY SAFE LOOP CALIBRATOR CAN BE CONNECTED TO TERMINALS "+", "-", OR "T": SEE SPECIFIC PRODUCT MANUAL FOR CONNECTION DETAILS.

[2] FM APPROVED INTRINSICALLY SAFE TEMP. SENSOR CALIBRATOR CAN BE CONNECTED TO TERMINALS "1" TO "5".

[3] ASSOCIATED APPARATUS PARAMETERS LIMITS

V_{OC} OR $U_0 \leq V_{MAX}$
I_{SC} OR $I_0 \leq I_{MAX}$
$\frac{(V_{OC} \times I_{SC})}{4} \leq P_{MAX}$
$C_A \geq C_{CABLE} + C_i$
$L_A \geq L_{CABLE} + L_i$

FM CERTIFIED PRODUCT

NO MODIFICATIONS PERMITTED WITHOUT THE APPROVAL OF RTC TEMPERATURE DESIGN ENGINEERING

[4] POWER / LOOP TERMINAL PARAMETERS

	FIELDBUS (Terminals "+" & "-")
Ui =	17.5 V
Ii =	380 mA
Pi =	5.32W
Ci =	2.1 nF
Li =	0

[5] ASSOCIATED APPARATUS LIMITS AT SENSOR TERMINALS ("1" THRU "5")

	FIELDBUS
U_0 =	13.9 Vdc
I_0 =	23 mA
Po:max =	79 mW
C_0 =	0.73 uF
L_0 =	75 mH

[6] ANSI/ISA RP 12.6 (SIMPLE APPARATUS) DEFINITION: A DEVICE WHICH WILL NEITHER GENERATE NOR STORE MORE THAN 1.5 VOLTS, 100 mA, 25 mW, OR 20 microJoules.

[7] 3144P FIELDBUS TEMPERATURE TRANSMITTERS

[8] WARNING: TO PREVENT IGNITION OF FLAMMABLE OR COMBUSTIBLE ATMOSPHERES, DISCONNECT POWER BEFORE SERVICING.

[9] WARNING: SUBSTITUTION OF COMPONENTS MAY IMPAIR INTRINSIC SAFETY OR SUITABILITY FOR DIVISION 2.

[10] NO REVISIONS TO DRAWING WITHOUT PRIOR FACTORY MUTUAL APPROVAL.

[11] ASSOCIATED APPARATUS MANUFACTURER'S INSTALLATION DRAWING MUST BE FOLLOWED WHEN INSTALLING THIS EQUIPMENT.

[12] CONTROL EQUIPMENT CONNECTED TO BARRIER MUST NOT USED OR GENERATE MORE THAN 250 Vrms OR Vdc.

[13] THE ASSOCIATED APPARATUS MUST BE FACTORY MUTUAL APPROVED.

[14] RESISTANCE BETWEEN INTRINSICALLY SAFE GROUND AND EARTH GROUND MUST BE LESS THAN 1 OHM

[15] THE ENTITY CONCEPT ALLOWS INTERCONNECTION OF INTRINSICALLY SAFE APPARATUS WITH ASSOCIATED APPARATUS WHEN THE FOLLOWING IS TRUE:
Vmax OR Ui ≥ Voc, Vt OR Uo; Imax OR Ii ≥ Isc, It OR Io; Pmax OR Pi ≥ Po;
Ca ≥ Ci+Ccable; La ≥ Li+Lcable.

UNCLASSIFIED LOCATION

HAZARDOUS (CLASSIFIED) LOCATION
FISCO FOR CLASS I, DIVISION 1, GROUPS A,B,C,D,E,F,G
CLASS I, ZONE 0 AEx ia IIC
NONINCENDIVE FOR CLASS I, DIVISION 2, GROUPS A,B,C,D

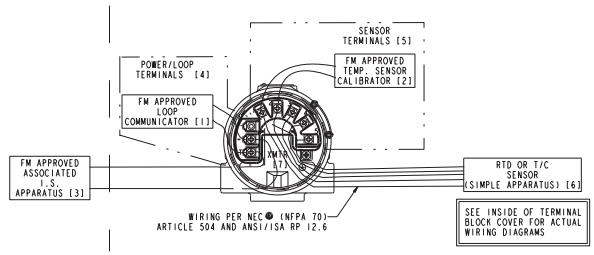

ROSEMOUNT
SIZE D | 03144-5075 | REV AD
CAD Maintained, (Pro/E) SHEET 2 OF 4

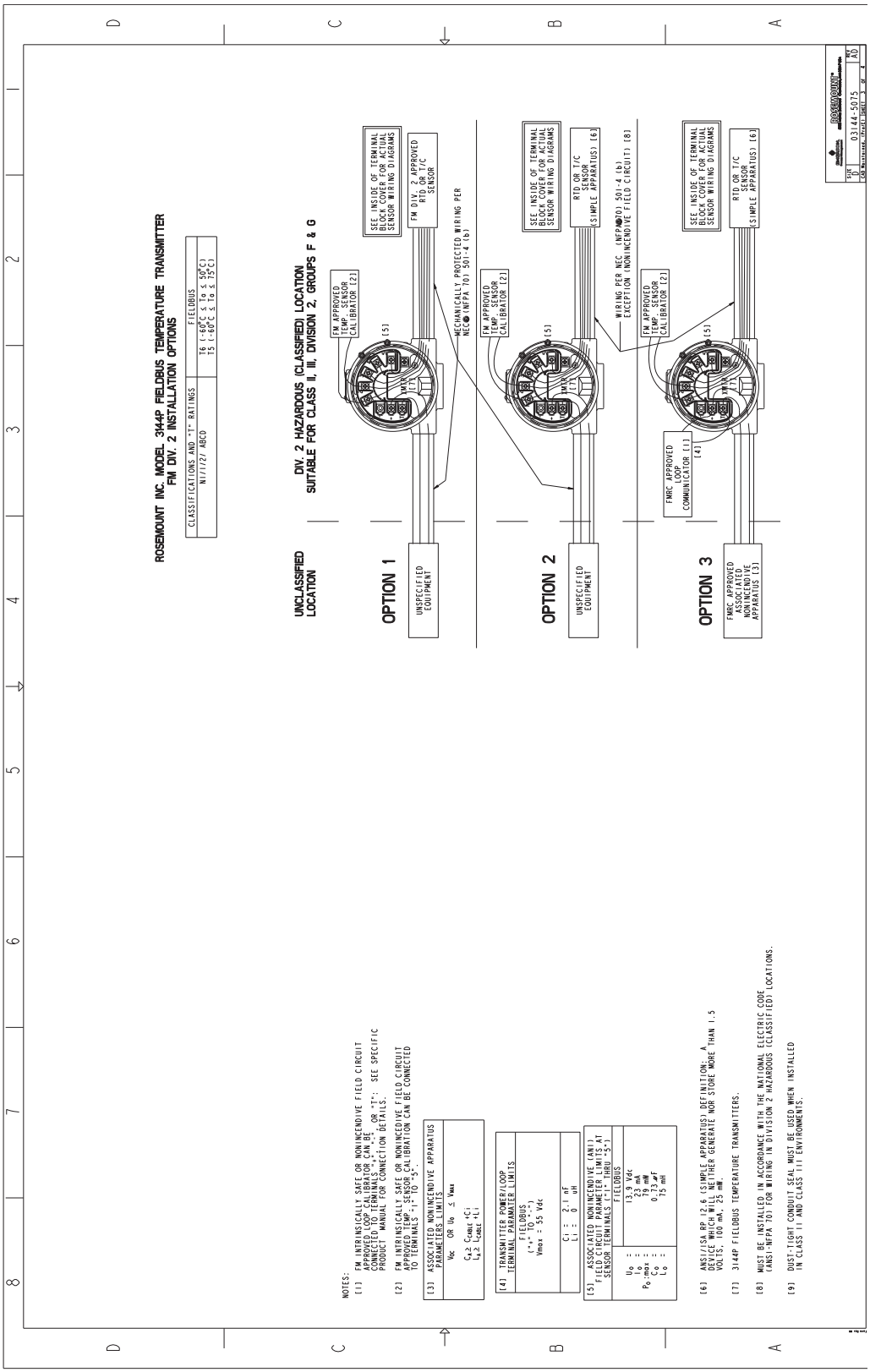
ROSEMOUNT INC. MODEL 3144P FIELDBUS TEMPERATURE TRANSMITTER
FM DIV. 2 INSTALLATION OPTIONS
CLASSIFICATIONS AND "T" RATINGS
N1/1/2/ ABCD
FIELDBUS
T6 (-60°C ≤ Ta ≤ 50°C)
T5 (-60°C ≤ Ta ≤ 75°C)
UNCLASSIFIED LOCATION
DIV. 2 HAZARDOUS (CLASSIFIED) LOCATION
SUITABLE FOR CLASS II, III, DIVISION 2, GROUPS F & G
OPTION 1
OPTION 2
OPTION 3
UNSPECIFIED EQUIPMENT
FM APPROVED TEMP. SENSOR CALIBRATOR [2]
SEE INSIDE OF TERMINAL BLOCK COVER FOR ACTUAL SENSOR WIRING DIAGRAMS
FM DIV. 2 APPROVED RTD OR T/C SENSOR
MECHANICALLY PROTECTED WIRING PER NEC® (NFPA 70) 501-4 (b)
RTD OR T/C SENSOR (SIMPLE APPARATUS) [6]
WIRING PER NEC (NFPA 70) 501-4 (b) EXCEPT ON (NONINCENDIVE FIELD CIRCUIT) [8]
FMRC APPROVED LOOP COMMUNICATOR [1] [4]
FMRC APPROVED ASSOCIATED NONINCENDIVE APPARATUS [3]
NOTES:
[1] FM INTRINSICALLY SAFE OR NONINCENDIVE FIELD CIRCUIT APPROVED LOOP CALIBRATOR CAN BE CONNECTED TO TERMINALS "+", "-", OR "T": SEE SPECIFIC PRODUCT MANUAL FOR CONNECTION DETAILS.
[2] FM INTRINSICALLY SAFE OR NONINCEDIVE FIELD CIRCUIT APPROVED TEMP. SENSOR CALIBRATION CAN BE CONNECTED TO TERMINALS "+" TO "-".
[3] ASSOCIATED NONINCENDIVE APPARATUS PARAMETERS LIMITS
Vac OR Uo ≤ Vmax
Ca ≥ Ccable +Ci
La ≥ Lcable +Li
[4] TRANSMITTER POWER/LOOP TERMINAL PARAMETER LIMITS
FIELDBUS ("+" TO "-")
Vmax = 55 Vdc
Ci = 2.1 nF
Li = 0 uH
[5] ASSOCIATED NONINCENDIVE (ANI) FIELD CIRCUIT PARAMETER LIMITS AT SENSOR TERMINALS ("+" THRU "-5")
FIELDBUS
Uo = 13.9 Vdc
Io = 23 mA
Po:max = 79 mW
Co = 0.73 uF
Lo = 75 mH
[6] ANSI/ISA RP 12.6 (SIMPLE APPARATUS) DEFINITION: A DEVICE WHICH WILL NEITHER GENERATE NOR STORE MORE THAN 1.5 VOLTS, 100 mA, 25 mW.
[7] 3144P FIELDBUS TEMPERATURE TRANSMITTERS.
[8] MUST BE INSTALLED IN ACCORDANCE WITH THE NATIONAL ELECTRIC CODE (ANSI-NFPA 70) FOR WIRING IN DIVISION 2 HAZARDOUS (CLASSIFIED) LOCATIONS.
[9] DUST-TIGHT CONDUIT SEAL MUST BE USED WHEN INSTALLED IN CLASS II AND CLASS III ENVIRONMENTS.
03144-5075
AD

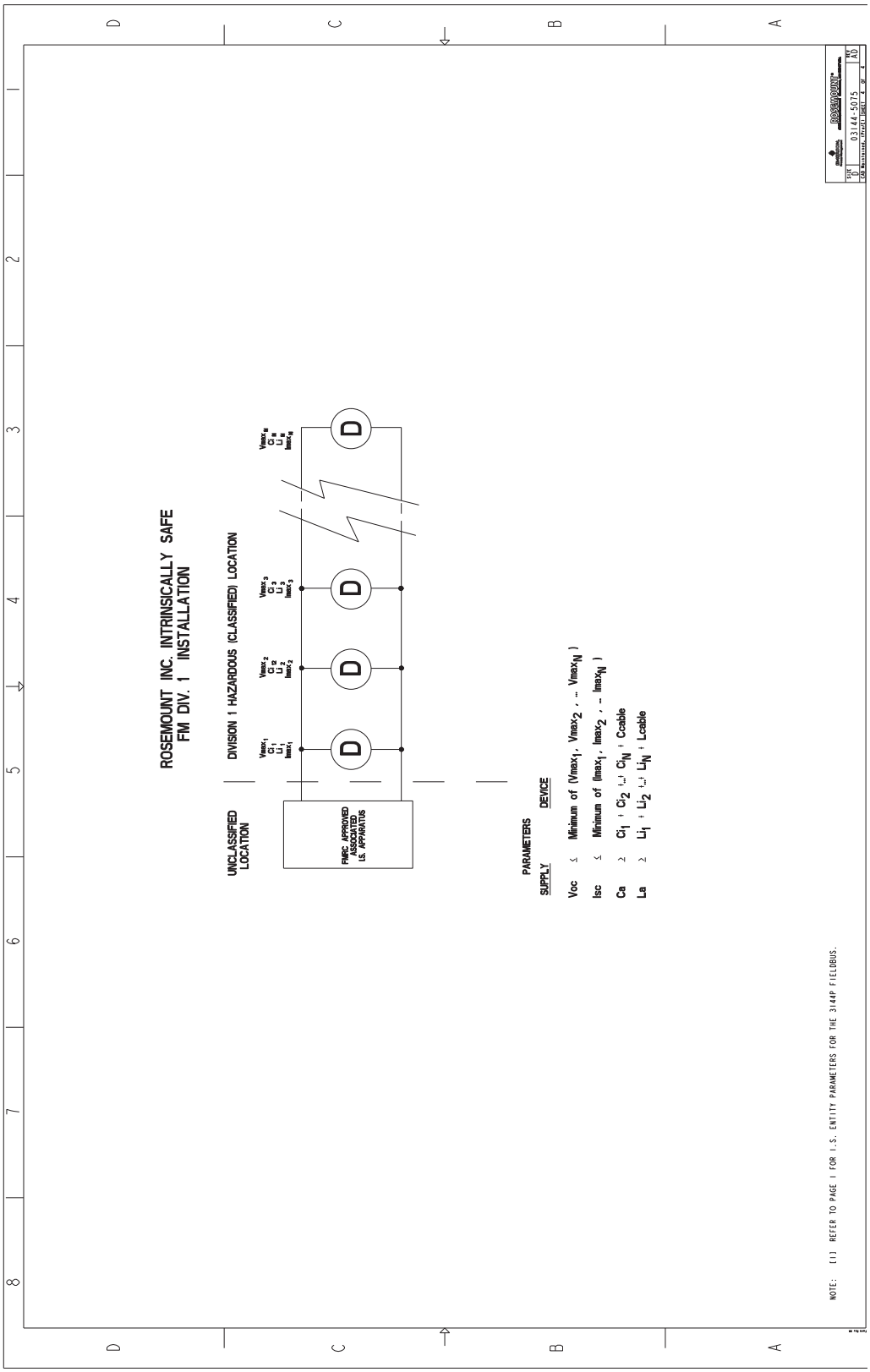
ROSEMOUNT INC. INTRINSICALLY SAFE
FM DIV. 1 INSTALLATION
DIVISION 1 HAZARDOUS (CLASSIFIED) LOCATION
UNCLASSIFIED LOCATION
FMRC APPROVED ASSOCIATED I.S. APPARATUS
D
PARAMETERS
SUPPLY
DEVICE
Voc ≤ Minimum of (Vmax1, Vmax2, ... VmaxN)
Isc ≤ Minimum of (Imax1, Imax2, ... ImaxN)
Ca ≥ Ci1 + Ci2 +...+ CiN + Ccable
La ≥ Li1 + Li2 +...+ LiN + Lcable
NOTE: (1) REFER TO PAGE 1 FOR I.S. ENTITY PARAMETERS FOR THE 3144P FIELDBUS.

Figure B-2. FM Intrinsically Safe and Nonincendive (HART) Field Circuit Configuration Installation Drawing 03144-0321, Rev AC

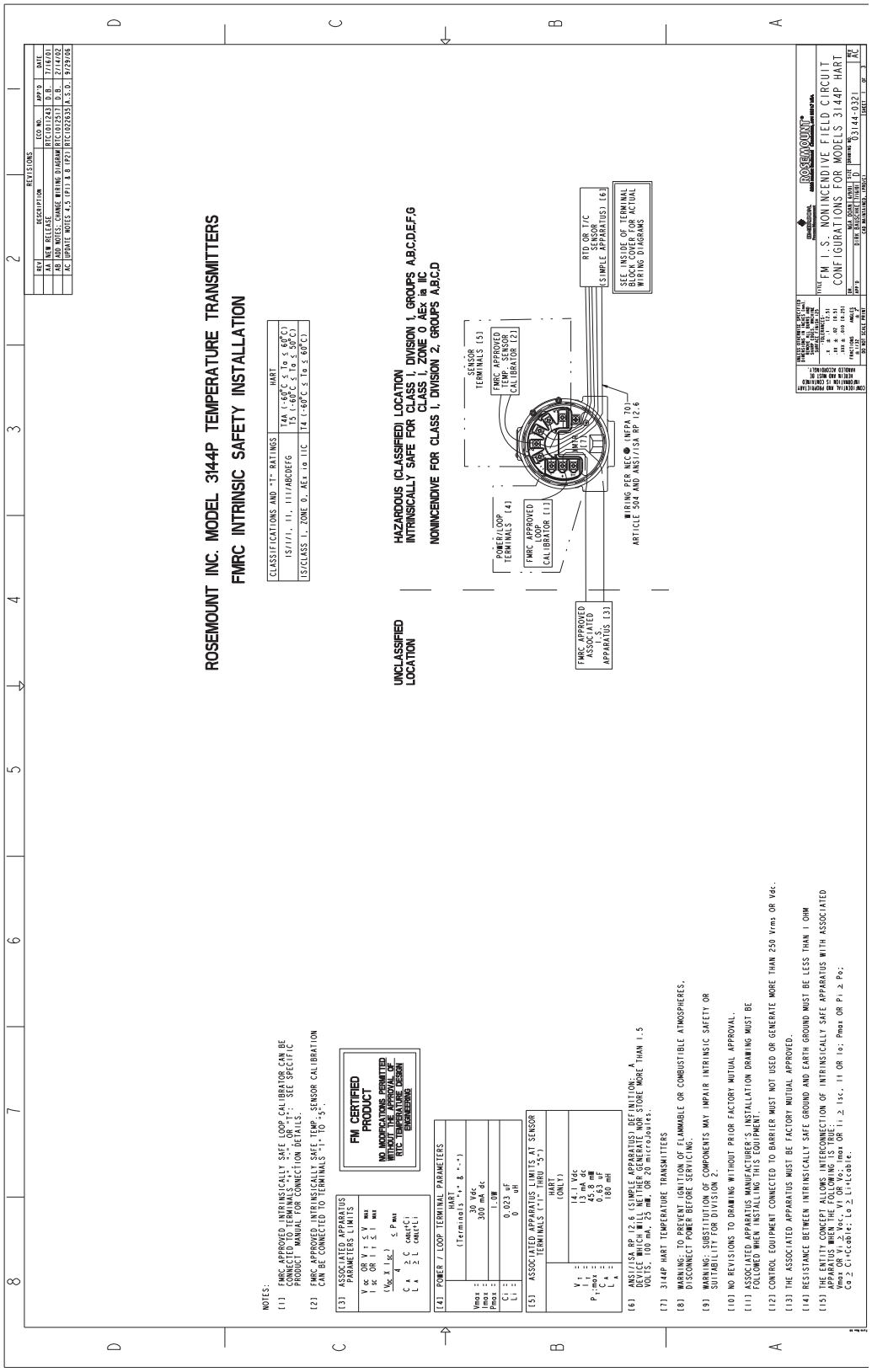

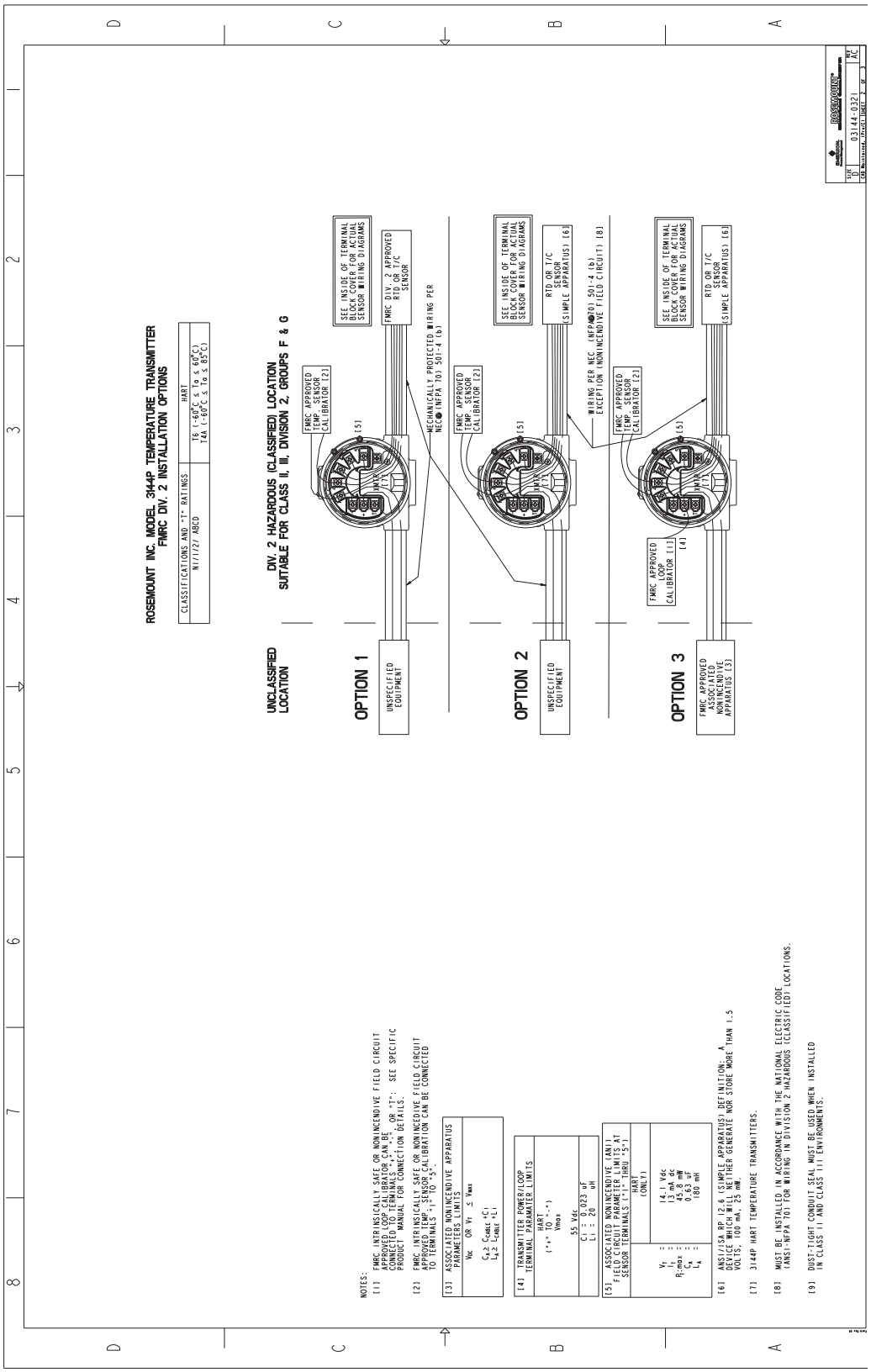
ROSEMOUNT INC. MODEL 3144P TEMPERATURE TRANSMITTER
FMRC DIV. 2 INSTALLATION OPTIONS
CLASSIFICATIONS AND "T" RATINGS
N/I/I/2/ ABCD
HART
T6 (-60°C ≤ Ta ≤ 60°C)
T4A (-60°C ≤ Ta ≤ 85°C)
DIV. 2 HAZARDOUS (CLASSIFIED) LOCATION
SUITABLE FOR CLASS II, III, DIVISION 2, GROUPS F & G
UNCLASSIFIED LOCATION
OPTION 1
OPTION 2
OPTION 3
UNSPECIFIED EQUIPMENT
FMRC APPROVED ASSOCIATED NONINCENDIVE APPARATUS [3]
FMRC APPROVED TEMP. SENSOR CALIBRATOR [2]
FMRC APPROVED CONDUIT SEAL CALIBRATOR [1]
[4]
[5]
SEE INSIDE OF TERMINAL BLOCK COVER FOR ACTUAL SENSOR WIRING DIAGRAMS
FMRC DIV. 2 APPROVED RTD OR T/C SENSOR
RTD OR T/C SENSOR (SIMPLE APPARATUS) [6]
MECHANICALLY PROTECTED WIRING PER NEC® (NFPA 70) 501-4 (b)
WIRING PER NEC (NFPA 70) 501-4 (b) EXCEPTION (NONINCENDIVE FIELD CIRCUIT) [8]
NOTES:
[1] FMRC INTRINSICALLY SAFE OR NONINCENDIVE FIELD CIRCUIT APPROVED LOOP CALIBRATOR CAN BE CONNECTED TO TERMINALS "+" OR "-": SEE SPECIFIC PRODUCT MANUAL FOR CONNECTION DETAILS.
[2] FMRC INTRINSICALLY SAFE OR NONINCENDIVE FIELD CIRCUIT APPROVED TEMP. SENSOR CALIBRATION CAN BE CONNECTED TO TERMINALS "+" TO "-".
[3] ASSOCIATED NONINCENDIVE APPARATUS PARAMETERS LIMITS
Voc OR Vt ≤ Vmax
Ca ≥ Ccable +Ci
La ≥ Lcable +Li
[4] TRANSMITTER POWER/LOOP TERMINAL PARAMETER LIMITS
HART
("+" TO "-")
Vmax
55 Vdc
Ci = 0.023 uF
Li = 20 uH
[5] ASSOCIATED NONINCENDIVE (ANI) FIELD CIRCUIT PARAMETER LIMITS AT SENSOR TERMINALS ("+" THRU "-")
HART (ONLY)
Vt = 14.1 Vdc
It = 13.8 mAdc
Rt,max = 45.8 mΩ
Ca = 0.63 uF
La = 180 mH
[6] ANSI/ISA RP 12.6 (SIMPLE APPARATUS) DEFINITION: A DEVICE WHICH WILL NEITHER GENERATE NOR STORE MORE THAN 1.5 VOLTS, 100 mA, 25 mW.
[7] 3144P HART TEMPERATURE TRANSMITTERS.
[8] MUST BE INSTALLED IN ACCORDANCE WITH THE NATIONAL ELECTRIC CODE (ANSI-NFPA 70) FOR WIRING IN DIVISION 2 HAZARDOUS (CLASSIFIED) LOCATIONS.
[9] DUST-TIGHT CONDUIT SEAL MUST BE USED WHEN INSTALLED IN CLASS II AND CLASS III ENVIRONMENTS.
ROSEMOUNT
03144-0321
AC

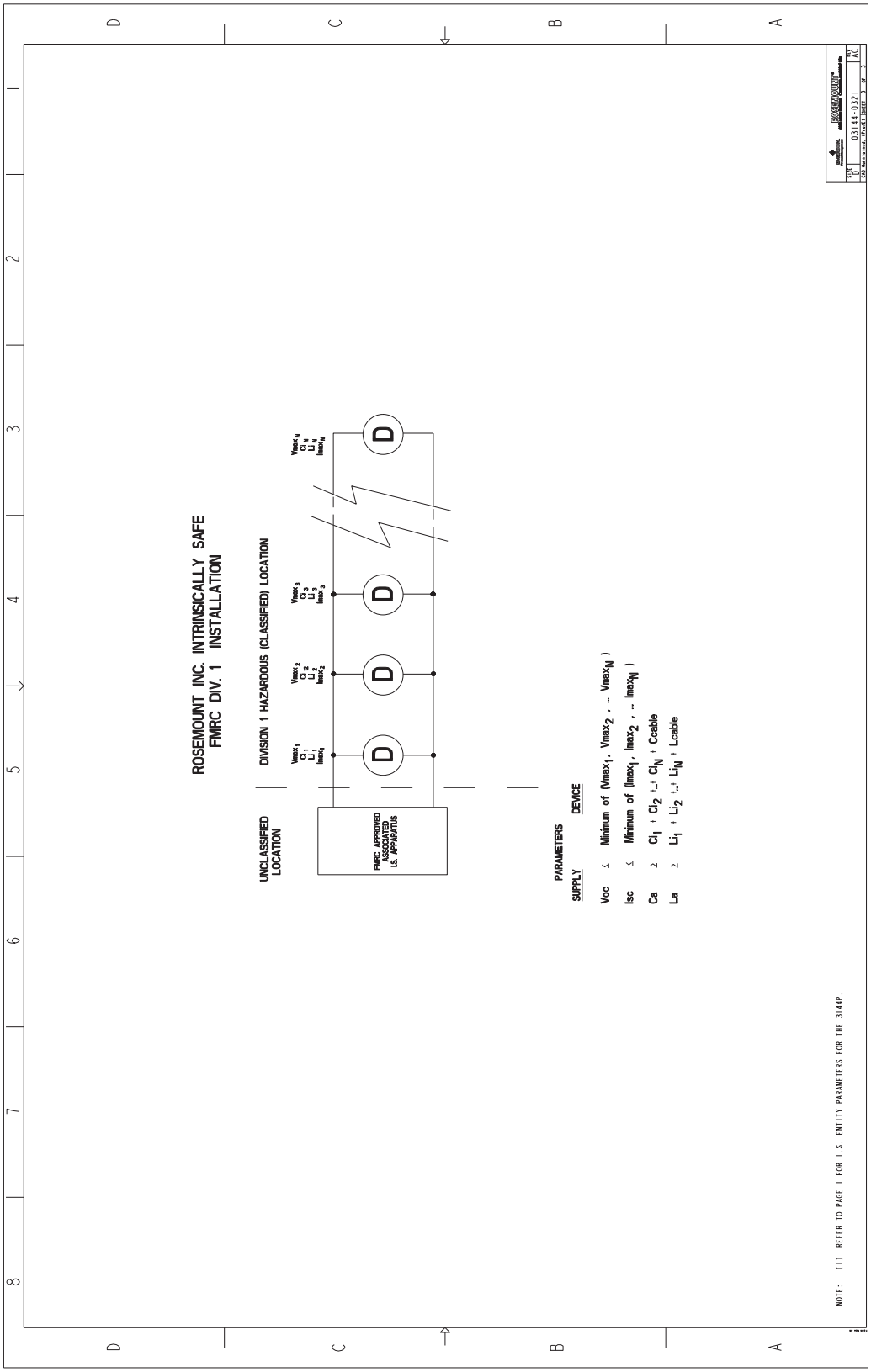
ROSEMOUNT INC. INTRINSICALLY SAFE
FMRC DIV. 1 INSTALLATION
DIVISION 1 HAZARDOUS (CLASSIFIED) LOCATION
UNCLASSIFIED LOCATION
FMRC APPROVED ASSOCIATED I.S. APPARATUS
D
PARAMETERS
SUPPLY
DEVICE
Voc ≤ Minimum of (Vmax1, Vmax2 , ... VmaxN)
Isc ≤ Minimum of (Imax1, Imax2 , ... ImaxN)
Ca ≥ Ci1 + Ci2 +... CiN + Ccable
La ≥ Li1 + Li2 +... LiN + Lcable
NOTE: [1] REFER TO PAGE 1 FOR I.S. ENTITY PARAMETERS FOR THE 3144P.

Figure B-3. 3144P FM Explosion-proof Approval Installation Drawing 03144-0320

CONFIDENTIAL AND PROPRIETARY INFORMATION IS CONTAINED HEREIN AND MUST BE HANDLED ACCORDINGLY

REVISIONS				
REV	DESCRIPTION	CHG. NO.	APP'D	DATE
AB	ADD T5 TO NOTE 5	RTC1012632	D.B.	2/21/02

HAZARDOUS (CLASSIFIED) LOCATION

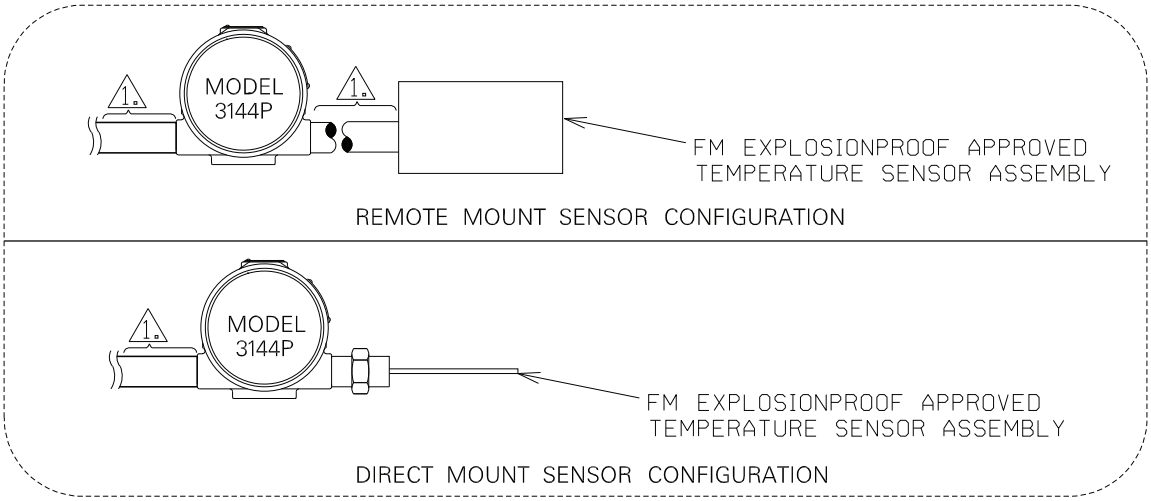

5. MODEL 3144P FM APPROVAL CLASSIFICATION:
   EXPLOSION PROOF FOR CLASS I, DIVISION 1, GROUPS A, B, C, & D (T5)
   DUST-IGNITION PROOF FOR CLASS II/III, DIVISION 1, GROUPS E, F, & G;
   NONINCENDIVE FOR CLASS I, DIVISION 2, GROUPS A, B, C, & D (T4A).
   NEMA ENCLOSURE TYPE 4X
   AMBIENT TEMP. LIMITS: -50°C TO +85°C.
4. FOR FIELD WIRING CONNECTIONS IN AMBIENT TEMPERATURES ABOVE 60°, USE WIRING RATED FOR AT LEAST 90°C.
3. TEMPERATURE SENSOR ASSEMBLY MUST BE FM APPROVED FOR APPROPRIATE AREA CLASSIFICATION.
2. ALL CONDUIT THREADS MUST BE ASSEMBLED WITH A MINIMUM OF FIVE FULL THREADS ENGAGEMENT.
1. INSTALL PER NATIONAL ELECTRICAL CODE (NEC). FOR GROUP A, SEAL ALL CONDUITS WITHIN 18 INCHES OF ENCLOSURE; OTHERWISE, CONDUIT SEAL NOT REQUIRED FOR COMPLIANCE WITH NEC 501-5a(1).

NOTES:

CAD MAINTAINED (MicroStation)

UNLESS OTHERWISE SPECIFIED DIMENSIONS IN INCHES [mm]. REMOVE ALL BURRS AND SHARP EDGES. MACHINE SURFACE FINISH 125

-TOLERANCE-
.X ± .1 [2,5]
.XX ± .02 [0,5]
.XXX ± .010 [0,25]
FRACTIONS ± 1/32
ANGLES ± 2°

DO NOT SCALE PRINT

CONTRACT NO.

DR. NGA DOAN 6/29/01
CHK'D
APP'D. D. BAUSCHKE 7/17/01
APP'D. GOVT.

EMERSON. Process Management
ROSEMOUNT®
8200 Market Boulevard • Chanhassen, MN 55317 USA

TITLE INSTALLATION DRAWING:
MODEL 3144P
FACTORY MUTUAL (FM) EXPLOSIONPROOF

SIZE A | FSCM NO | DWG NO. 03144-0320

SCALE N/A | WT. ——— | SHEET 1 OF 1

Form Rev AC

Figure B-4. 3144P (HART) CSA Intrinsic Safety Approval Installation Drawing 03144-0322

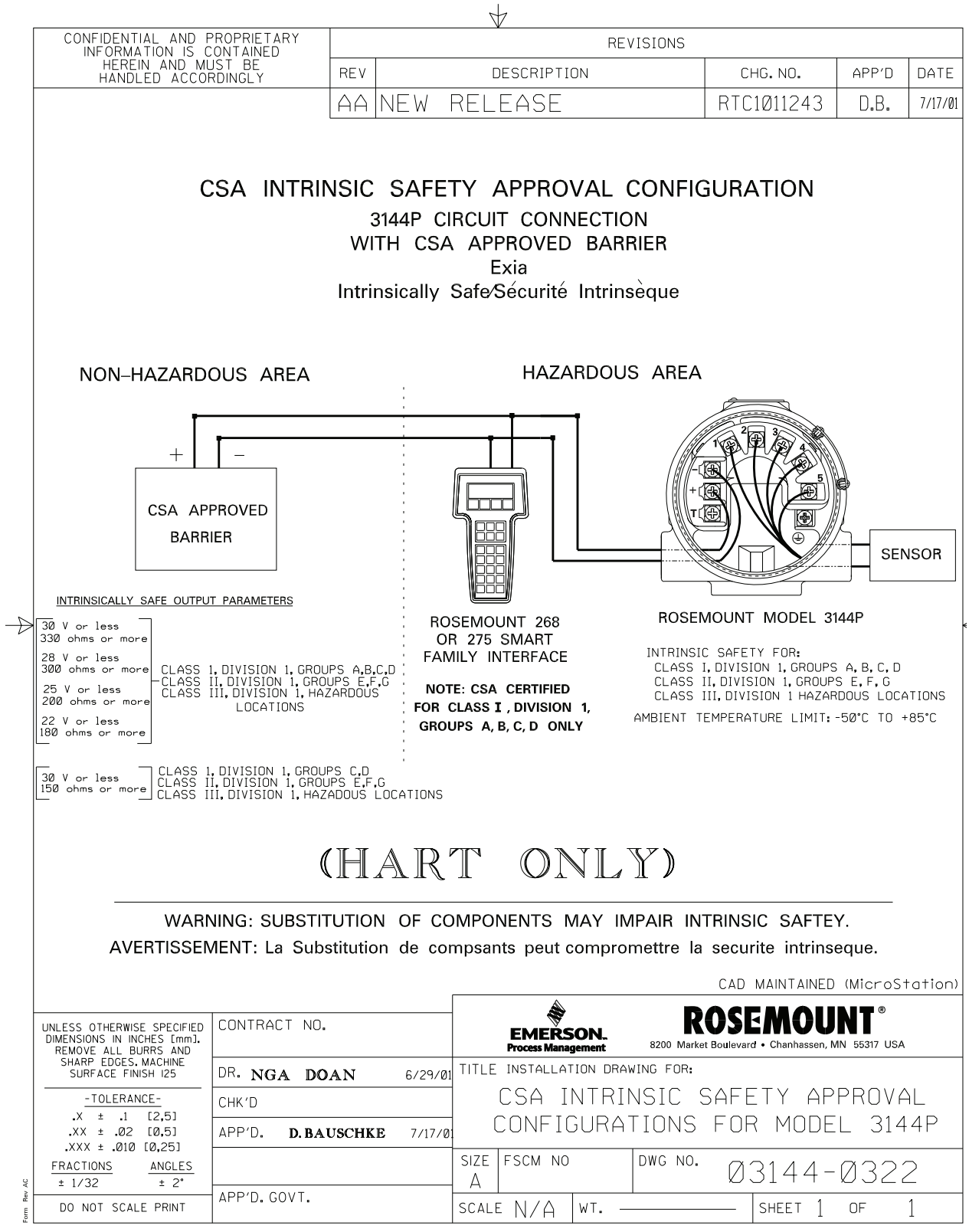

Figure B-5. 3144P SAA Flameproof Approval Installation Drawing 03144-0325

CONFIDENTIAL AND PROPRIETARY INFORMATION IS CONTAINED HEREIN AND MUST BE HANDLED ACCORDINGLY

REVISIONS

REV	DESCRIPTION	CHG. NO.	APP'D	DATE
AC	ADD NOTES 8 & 9. CHANGE AMBIENT TEMPS IN NOTE 5. ADD TEFLON TAPE TO NOTE 2.	RTC1Ø13713	D.B.	9/4/Ø2
AD	CHANGE IP RATING IN NOTE 5	RTC1Ø138Ø8	D.B.	9/23/Ø2

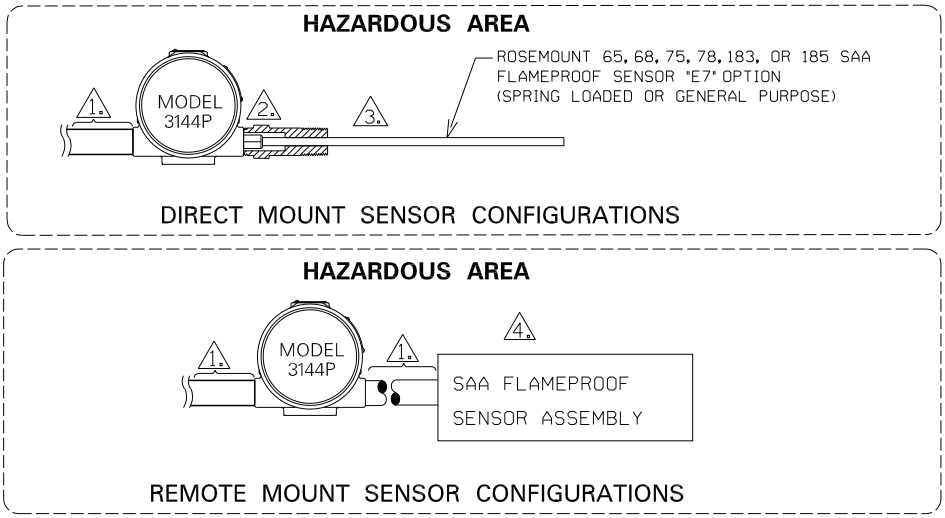

9. FOR A CERTIFICATION LABEL WITH MORE THAN ONE TYPE OF CERTIFICATION MARKING ON IT, ON COMPLETION OF COMMISSIONING THE APPARATUS, THE IRRELEVANT MARKING CODE(S) SHALL BE PERMANENTLY SCRIBED OFF.

8. COVERS ARE TIGHTENED TO METAL-TO-METAL SEAL WITH A TOOL.

7. WAIT 1Ø SECONDS AFTER DISCONNECTING POWER BEFORE REMOVING COVER.

6. A CONDUIT PLUG MUST BE INSTALLED INTO ANY UNUSED CONDUIT ENTRIES.

5. ROSEMOUNT MODELS 3144P SAA FLAMEPROOF
APPROVAL DESCRIPTION: Ex d IIC T6 (Tamb= -20°C TO +60°C)
IP66

4. TEMPERATURE SENSOR ASSEMBLY MUST BE SAA APPROVED FOR APPROPRIATE AREA CLASSIFICATION.

3. SPRING LOADED SENSORS MUST USE A THERMOWELL ASSEMBLY.

2. THREADS MUST BE ASSEMBLED WITH LOCTITE THREAD SEALANT OR TEFLON TAPE (PTFE) AND HAVE A MINIMUM OF FIVE FULL THREADS ENGAGEMENT AND 8 mm AXIAL LENGTH ENGAGEMENT.

1. INSTALL PER LOCAL INSTALLATION CODES.
SAA APPROVED CABLE ENTRY OR STOPPING BOX REQUIRED.

CAD MAINTAINED (MicroStation)

UNLESS OTHERWISE SPECIFIED DIMENSIONS IN INCHES [mm]. REMOVE ALL BURRS AND SHARP EDGES. MACHINE SURFACE FINISH 125

-TOLERANCE-
.X ± .1 [2,5]
.XX ± .02 [Ø,5]
.XXX ± .Ø1Ø [Ø,25]
FRACTIONS ± 1/32
ANGLES ± 2°

DO NOT SCALE PRINT

CONTRACT NO.

DR. NGA DOAN 8/7/Ø1

CHK'D

APP'D DIRK BAUSCHKE 8/17/Ø1

APP'D. GOVT.

EMERSON. Process Management

ROSEMOUNT®
8200 Market Boulevard • Chanhassen, MN 55317 USA

TITLE INSTALLATION DRAWING: SAA FLAMEPROOF TEMPERATURE MEASUREMENT ASSEMBLY (E7)

SIZE A | FSCM NO | DWG NO. Ø3144-Ø325

SCALE N/A | WT. | SHEET 1 OF 1

Form Rev AC

Figure B-6. 3144P CSA Explosion-proof Approval Installation Drawing 03144-0326

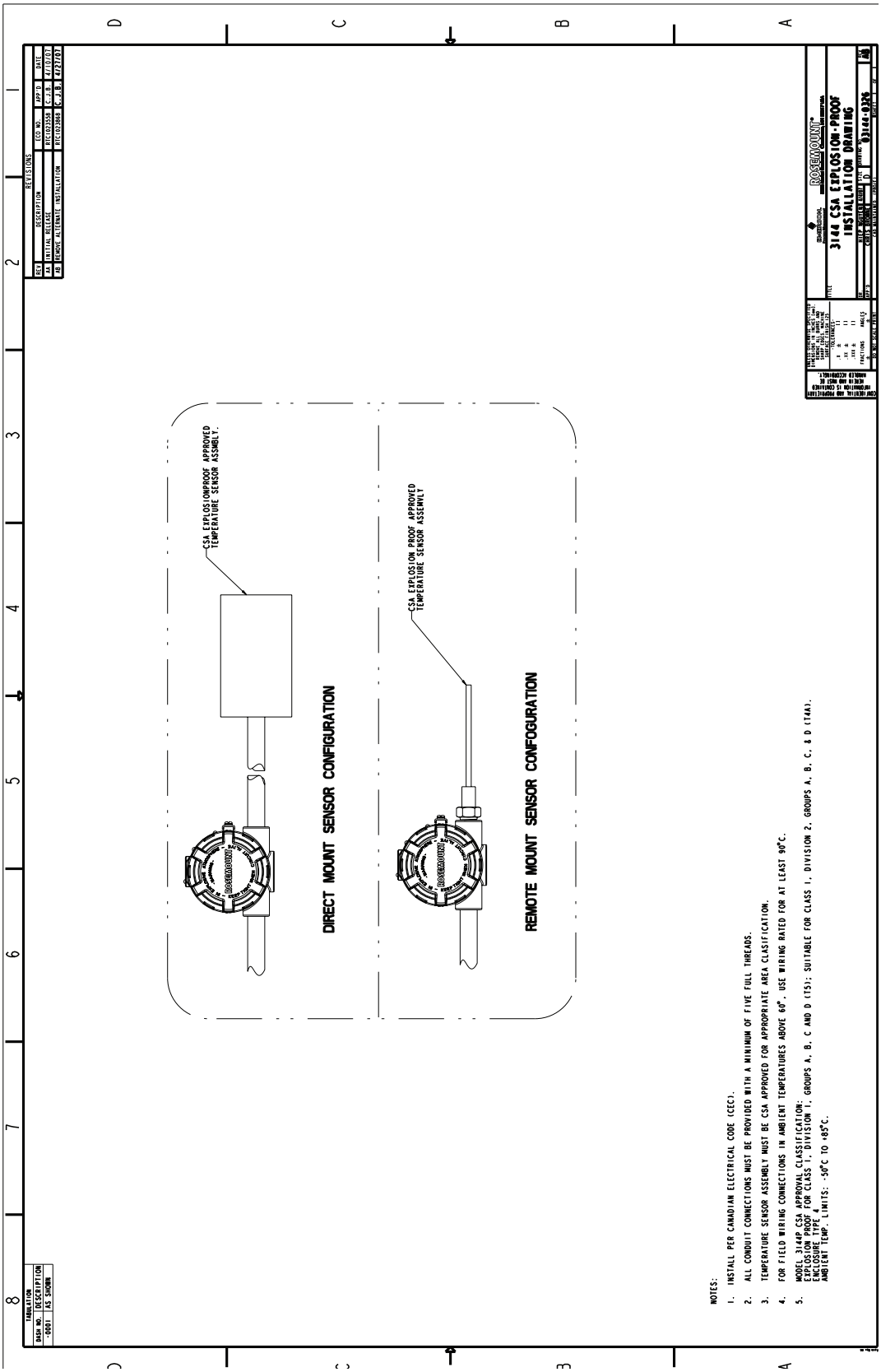

Figure B-7. 3144P (Fieldbus) CSA Intrinsically Safe Approval Installation Drawing 03144-5076

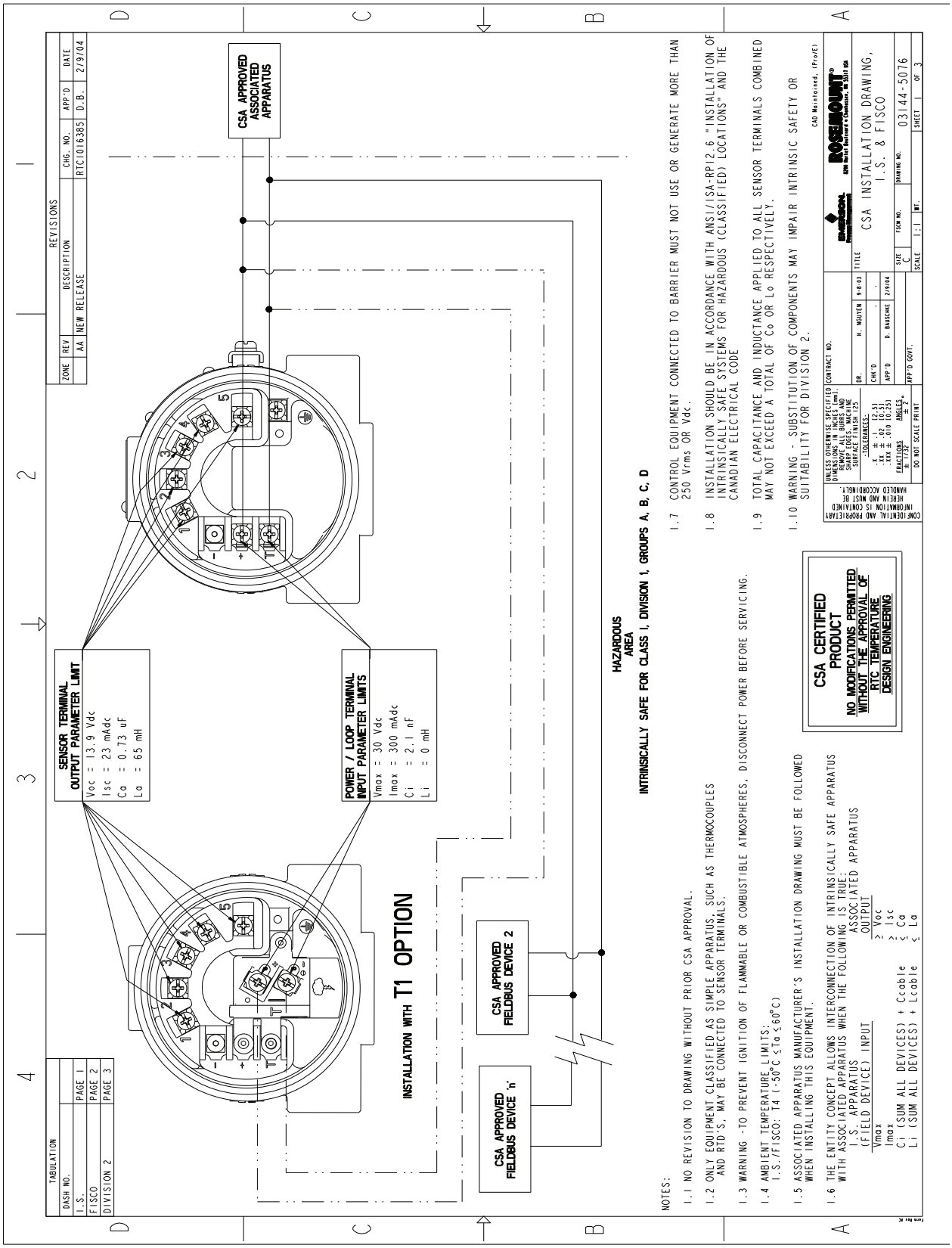

Index

A

Alarm Switch . . . 13
Ambient temperature effect . . . 192
AMS . . . 40
  Configuration
    2-Wire RTD Offset . . . 43
    Hot Backup Configuration . . . 46
    Sensor 1 Serial Number . . . 42
    Variable Mapping . . . 41
  Device Output Configuration
    Alarm and Saturation . . . 94
    Process Variable Damping . . . 93
  HART Tri-Loop . . . 100
  Measurement Filtering
    Intermittent Threshold . . . 96
    Master Reset . . . 96
    Open Sensor Holdoff . . . 97
Analog Input . . . 155
  Advanced Features . . . 160
    alarm_type . . . 160
    out_d . . . 160
  Configure . . . 156
    channel . . . 156
    L_type . . . 156
    out_scale . . . 156
    xd_scale . . . 156
  Diagnostics . . . 161
  Filtering . . . 159
  Process Alarms . . . 159
    Alarm Priority . . . 159
  Simulation . . . 155
    Manual Mode . . . 155
    Simulate . . . 155
  Status . . . 160
    Options . . . 160
Approvals
  Australian . . . 219
  Combination . . . 224
  DNV . . . 224
  GOSTANDART . . . 224

B

Block Information
  Capabilities . . . 142
  Device Description . . . 140
  Link Active Scheduler . . . 141
  Modes . . . 140
  Node Address . . . 140

C

Calibration . . . 121
Check Output
  Process Variables . . . 40
Commissioning . . . 10
  Flowchart . . . 10
Configuration
  2-Wire RTD Offset . . . 42
  Average Temperature . . . 43
  Change Connections . . . 41
  Change Type . . . 41
  Differential Temperature . . . 43
  Drift Alert Configuration . . . 80
  Dual Sensor Configuration . . . 43
  First-Good Configuration . . . 44
  Output Units . . . 42
  Sensor 1 Serial Number . . . 42
  Sensor 2 Serial Number . . . 42
  Sensor Configuration . . . 41
  Terminal Temperature . . . 43
  Variable Mapping . . . 41
Considerations . . . 3
  Corrosive Environments . . . 4
  Electrical . . . 3
  Environmental . . . 3
    Temperature Effects . . . 3
  General . . . 3
  Moist Environments . . . 4
  Mounting . . . 5
  Software Compatibility . . . 5
Corrosive Environments . . . 4
Custom Meter Configuration . . . 152
  blk_tag_# . . . 152
  blk_type_# . . . 153
  custom_tag_#(1) . . . 153
  custom_units_# . . . 153
  Display_param_sel . . . 152
  param_index_# . . . 153
  units_type_# . . . 153

D

Device Information
  Date . . . 95
  Descriptor . . . 95
  Message . . . 95
  Tag . . . 94
Device Output Configuration
  Alarm and Saturation . . . 93
  HART Output . . . 94
  LCD Display Options . . . 94
  Process Variable Damping . . . 92
  PV Range Values . . . 91
Diagnostics and Service
  Loop Test . . . 98
  Test Device . . . 97
Dimensional drawings . . . 203

E

Electrical Considerations 3
Environmental Considerations 3
European Installation 16

F

Fieldbus
  See Foundation Fieldbus 139
Flowchart
  Commissioning 10
  Installation with Tri-Loop 18
  Troubleshooting 170
Foundation Fieldbus
  Block Information
    Capabilities 142
    Device Description 140
    Link Active Scheduler 141
    Modes 140
    Node Address 140
  Function Block
    Analog Input 155
    Information 140
    LCD Transducer Block 152
    Resource Block 144
    Sensor Transducer Block 150
  LCD Display
    Troubleshooting 172
  Operation 162
  Power supply 25
  SPM Configuration 167
  Statistical Process Monitoring 164
  Trim the Transmitter 162
    Lower Trim 163
    Recall Factory 163
    Sensor Calibration 163
    Upper Trim 163
  Troubleshooting 171
    Flowchart 170
Foundations Fieldbus
  Set the switches
    With LCD display 12
    Without LCD display 12
Function Block
  Analog Input 155
  LCD Transducer Block 152
  Resource Block 144
  Sensor Transducer Block 150
Function Block Information 140
Functional specifications 191

G

General Consideration 3
Grounding 25
  Sensor Shield 25
  Shield Recommendations 26
  Transmitter Housing 27

H

HART
  Check Output
    Process Variables 40
  Configuration
    2-Wire RTD Offset 42
    Average Temperature 43
    Change Type. HART Configuration
    Change Connections 41
    Differential Temperature 43
    Drift Alert Configuration 80
    Dual Sensor Configuration 43
    First-Good Configuration 44
    Output Units 42
    Sensor 1 Serial Number 42
    Sensor 2 Serial Number 42
    Sensor Configuration 41
    Terminal Temperature 43
    Variable Mapping 41
  Current Loop Connection 22
  Device Information
    Date 95
    Descriptor 95
    Message 95
    Tag 94
  Device Output Configuration
    Alarm and Saturation 93
    HART Output 94
    LCD Display Options 94
    Process Variable Damping 92
    PV Range Values 91
  Diagnostics and Service
    Loop Test 98
    Test Device 97
  field wiring 20
  LCD Display
    Troubleshooting 137
  Maintenance
    Test Terminal 176
  Measurement Filtering
    50/60 Hz Filter 95
    Intermittent Sensor Detect 96
    Intermittent Threshold 96
    Master Reset 96
    Open Sensor Holdoff 97
  Power Connections 22
  Power supply 24
  Review Configuration Data
    Review 40
  Safety Instrumented Systems 179, 187
  Safety Instrumented Systems (SIS)
    Installation 188
    Changing Switch Position 188

Switches 188
Overview 187
Set the switches
With LCD display 11
Without LCD display 11
Trim the Transmitter
Active Calibrator 124
EMF Compensation 124
Output Trim 132
Scaled Output Trim 132, 133
Trim the Trasmitter 122
Troubleshooting 133
Updating the Software 30
HART Tri-Loop 99
Set PV Output Order 99
Set to Burst Mode 99
Special Considerations 100
Differential Temperature 100
Hot Backup 100
Hazardous location certification 217

I

Installation 10, 15
European 16
LCD Display 18
Multichannel 20
North American 15
With a 333 Tri-Loop 17
Installation Flowchart 10

L

LCD Display
Installation 18
Troubleshooting 137, 172
LCD Transducer Block 152
Custom Meter Configuration 152
Diagnostics 153
Self Test Procedure 153
Loop to Manual 10

M

Maintenance 176
Electronics Housing 176
Remove 176
Replace 177
Sensor Checkout 176
Test Terminal 176
Material Return 5
Measurement Filtering
50/60 Hz Filter 95
Intermittent Sensor Detect 96
Intermittent Threshold 96
Master Reset 96
Open Sensor Holdoff 97
Moist Environments 4
Mounting 13
Considerations 5
Incorrect Conduit Installation 14
With Drain Seal 14
Multichannel Installation 20
Multidrop CommunicationHART
Multidrop communication 98

N

North American Installation 15

O

Operation 162
Overview 162
SPM Configuration 167
SPM_bypass_verification 167
SPM_monitoring cycle 167
SPM#_active 168
SPM#_baseline values 168
SPM#_block_tag 167
SPM#_block_type 167
SPM#_parameter_index 167
SPM#_threshold 167
SPM#_user command 168
Statistical Process Monitoring 164
Configuration Phase 166
Learning Phase 166
Monitoring Phase 166
Trim the Transmitter 162
Ordering Information 206
Overview 1
Manual 1
Transmitter 2

P

Performance specifications 192
Power Supply
Foundation Fieldbus 25
Grounding 25
Sensor Shield 25
Shield recommendations 26
Transmitter Housing 27
HART 24
Surges 25
Transients 25
Power supply 198, 200

R

Resource Block 144
Diagnostics 149
Block Errors 149
Features 144
Features 144
features_sel 145
hard w lock 144
max_notify 145
reports 144
soft w lock 144
Unicode 144
Features_sel
Features 144
features_sel 145
hard w lock 144
max_notify 145
reports 144
soft w lock 144
Unicode 144
PlantWeb Alerts
Recommended Actions 148
PlantWeb™ Alerts
advisory alarms 146
failed_alarms 145
maint_alarms 146
Return of Materials 5
Review Configuration Data
Review 40
RFI effect 192

S

Safety Instrumented System 179, 187
Installation 188
Changing Switch Position 188
Switches 188
Overview 187
Safety Instrumented Systems
Installation
Switches 188
Sensor Transducer Block 150
Damping 150
Diagnostics 151
Set the Switches 11
Alarm 13
Foundation Fieldbus
With a LCD display 12
Without a LCD display 12
HART
With a LCD display 11
Without a LCD display 11
locations 12
Setting the Loop to Manual 10
Simulate Switch
Set the Switches
Simulate Switch 13
SIS
See Safety Instrumented Systems 179, 187
Software
Compatibility 5
Updating the HART software 30
Specifications
Functional 191
HART and Foundation Fieldbus 191
Performance 192
SPM Configuration 167
SPM_bypass_verification 167
SPM_monitoring_cycle 167
SPM#_active 168
SPM#_baseline values 168
SPM#_block_tag 167
SPM#_block_type 167
SPM#_parameter_index 167
SPM#_threshold 167
SPM#_user command 168
Stability 192
Statistical Process Monitoring 164
Configuration Phase 166
Learning Phase 166
Monitoring Phase 166

T

Terminal (Body) Temperature 43
Trim the Transmitter
HART 122
Active Calibrator 124
EMF Compensation 124
Sensor Input Trim HART
Trim the Transmitter
Sensor Input Trim 123
Sensor MatchingHART
Trim the Trasmitter
Sensor Matching 125
Trim the Trasmitter
Foundation Fieldbus 162
Lower Trim 163
Recall Trim 163
Sensor Calibration 163
UpperTrim 163
HART
Output Trim 132
Scaled Output Trim 133
Scaled Output Trim 132
Troubleshooting
Foundation Fieldbus 171
LCD Display 172
HART 133
LCD Display 137

V

Vibration effect 192

W

Wiring 20
Connecting to a Loop 22
HART
Current Loop Connection 22
Field Wiring 20
Power Connections 22
Sensor Connections 23
Millivolt Inputs 24
Ohm Inputs 24
RTD Inputs 24
Thermocouple Inputs 24

Reference Manual
00809-0100-4021, Rev GC
April 2014

Standard Terms and Conditions of Sale can be found at www.rosemount.com/terms_of_sale
The Emerson logo is a trademark and service mark of Emerson Electric Co.
Rosemount. the Rosemount logotype, and SMART FAMILY are registered trademarks of Rosemount Inc.
Coplanar is a trademark of Rosemount Inc.
Halocarbon is a trademark of the Halocarbon Products Corporation.o.
Fluorinert is a registered trademark of Minnesota Mining and Manufacturing Company Corporation
Syltherm 800 and D.C. 200 are registered trademarks of Dow Corning Corporation.
Neobee M-20 is a registered trademark of PVO International, Inc.
HART is a registered trademark of the HART Communication Foundation.
FOUNDATION fieldbus is a registered trademark of the Fieldbus Foundation.
All other marks are the property of their respective owners.

© April 2014 Rosemount, Inc. All rights reserved.

Emerson Process Management
Rosemount Measurement
8200 Market Boulevard
Chanhassen MN 55317 USA
Tel (USA) 1 800 999 9307
Tel (International) +1 952 906 8888
Fax +1 952 906 8889

Emerson Process Management
GmbH & Co.
Argelsrieder Feld 3
82234 Wessling
Germany
Tel 49 (8153) 9390
Fax 49 (8153) 939172

Emerson Process Management Asia
Pacific Private Limited
1 Pandan Crescent
Singapore 128461
T (65) 6777 8211
F (65) 6777 0947
Enquiries@AP.EmersonProcess.com

Beijing Rosemount Far East
Instrument Co., Limited
No. 6 North Street,
Hepingli, Dong Cheng District
Beijing 100013, China
T (86) (10) 6428 2233
F (86) (10) 6422 8586

ROSEMOUNT

EMERSON.
Process Management

Product Data Sheet
January 2014
00813-0100-4021, Rev MA

Rosemount 3144P Temperature Transmitter



- Industry-leading temperature transmitter delivers unmatched field reliability and innovative process measurement solutions
- Improve efficiency with Best-in-Class product specifications and capabilities
- Optimize measurement reliability with diagnostics designed for any protocol on any host system
- Explore the benefits of a Complete Point Solution from Rosemount Temperature

ROSEMOUNT

EMERSON.
Process Management

Rosemount 3144P Temperature Transmitter

Industry-leading temperature transmitter delivers unmatched field reliability and innovative process measurement solutions



- Superior accuracy and stability
- Dual and single sensor capability with universal sensor inputs (RTD, T/C, mV, ohms)
- Comprehensive sensor and process diagnostics offering
- IEC 61508 safety certification
- Dual-compartment housing
- Large LCD display
- 4-20 mA /HART® with Selectable Revisions (5 and 7)
- FOUNDATION Fieldbus, compliant to ITK 6.0 and NE107 standards

Improve efficiency with best-in-class product specifications and capabilities

- Reduce maintenance and improve performance with industry leading accuracy and stability
- Improve measurement accuracy by 75% with Transmitter-Sensor Matching
- Ensure process health with system alerts and easy to use Device Dashboards
- Easily check device status and values on local LCD display with large percent range graph
- Achieve high reliability and installation ease with the industry's most rugged dual compartment design



Optimize measurement reliability with diagnostics designed for any protocol on any host system

- Thermocouple Degradation Diagnostic monitors the health of a thermocouple loop, enabling preventative maintenance
- Minimum and Maximum Temperature Tracking tracks and records temperature extremes of the process sensors and the ambient environment
- Sensor Drift Alert detects sensor drift and alerts the user
- Hot Backup® provides temperature measurement redundancy

Content

Rosemount 3144P Temperature Transmitter . . . . . page 2
Transmitter specifications . . . . . page 8
Product certifications . . . . . page 16
Dimensional drawings . . . . . page 21

Explore the benefits of a complete point solution from Rosemount Temperature

- An “Assemble To Sensor” option enables Emerson to provide a complete point temperature solution, delivering an installation-ready transmitter and sensor assembly
- Emerson offers a selection of RTDs, thermocouples, and thermowells that bring superior durability and Rosemount reliability to temperature sensing, complementing the Rosemount Transmitter portfolio

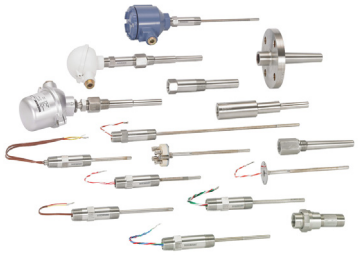

Experience global consistency and local support from numerous worldwide Rosemount Temperature manufacturing sites



- World-class manufacturing provides globally consistent product from every factory and the capacity to fulfill the needs of any project, large or small
- Experienced Instrumentation Consultants help select the right product for any temperature application and advise on best installation practices
- An extensive global network of Emerson service and support personnel can be on-site when and where they are needed

- Looking for a wireless temperature solution? For wireless applications that require superior performance and unmatched reliability, consider the **Rosemount 648 Wireless** temperature transmitter.
- A demanding high temperature application requires an innovative temperature solution. Pair the Rosemount 3144P Thermocouple Diagnostic with the **Rosemount 1075 High Temperature Thermocouple**.

Rosemount 3144P Temperature Transmitter



The industry-leading Rosemount 3144P Single Point temperature transmitter delivers unmatched field reliability and innovative process measurement solutions and diagnostics

Transmitter features include:

- Dual and Single Sensor Input Capabilities
- Transmitter-Sensor Matching (Option Code C2)
- Integral Transient Protector (Option Code T1)
- IEC 61508 Safety Certificate of Compliance (Option Code QT)
- Advanced Sensor and Process Diagnostics (Option Codes D01 and DA1)
- Large, Easy to Read LCD Display (Option Code M5)
- "Assemble to Sensor" option (Option Code XA)

Table 1. Rosemount 3144P Temperature Transmitter ordering information

★ The Standard offering represents the most common options. The starred options (★) should be selected for best delivery. The Expanded offering is subject to additional delivery lead time.

Model	Product description			
3144P	Temperature Transmitter			
Housing style		**Material**	**Conduit entry size**	
Standard				**Standard**
D1	Field Mount Housing, Dual-Compartment Housing	Aluminum	1/2–14 NPT	★
D2	Field Mount Housing, Dual-Compartment Housing	Aluminum	M20 x 1.5 (CM20)	★
D3	Field Mount Housing, Dual-Compartment Housing	Aluminum	PG 13.5 (PG11)	★
D4	Field Mount Housing, Dual-Compartment Housing	Aluminum	JIS G 1/2	★
D5	Field Mount Housing, Dual-Compartment Housing	Stainless Steel	1/2–14 NPT	★
D6	Field Mount Housing, Dual-Compartment Housing	Stainless Steel	M20 x 1.5 (CM20)	★
D7	Field Mount Housing, Dual-Compartment Housing	Stainless Steel	PG 13.5 (PG11)	★
D8	Field Mount Housing, Dual-Compartment Housing	Stainless Steel	JIS G 1/2	★
Transmitter output				
Standard				**Standard**
A	4-20 mA with digital signal based on HART protocol			★
F	FOUNDATION Fieldbus digital signal (includes 3 AI function block and Backup Link Active Scheduler)			★
Measurement configuration				
Standard				**Standard**
1	Single-Sensor Input			★
2	Dual-Sensor Input			★
Product certifications				
Standard				**Standard**
NA	No Approval			★
E5	FM Explosion-proof, Dust Ignition-Proof, and Non-incendive approval			★
I5[(1)]	FM Intrinsically Safe and Non-incendive (includes standard IS and FISCO for fieldbus units)			★
K5[(1)]	FM IS, Non-incendive & Explosion-proof combo (includes standard IS and FISCO for fieldbus units)			★
KB[(1)]	FM and CSA IS, Explosion-proof, and Non-incendive combo (includes standard IS and FISCO for FF units)			★
I6[(1)]	CSA Intrinsically Safe/FISCO and Division 2 (includes standard IS and FISCO for fieldbus units)			★

Table 1. Rosemount 3144P Temperature Transmitter ordering information

★ The Standard offering represents the most common options. The starred options (★) should be selected for best delivery. The Expanded offering is subject to additional delivery lead time.

Standard		**Standard**
K6[(1)]	CSA IS, FISCO Division 2 and Explosion-proof combo (includes standard IS, FISCO for fieldbus units)	★
E1	ATEX Flameproof approval	★
N1	ATEX type n approval	★
I1[(1)]	ATEX intrinsic safety approval (includes standard IS and FISCO for fieldbus units)	★
K1[(1)]	ATEX IS, Flameproof, Dust Ignition-Proof and type n combo (includes standard IS and FISCO for fieldbus units)	★
ND	ATEX Dust Ignition-Proof approval	★
KA[(1)]	ATEX/CSA intrinsic safety, Explosion-proof combo (includes standard IS and FISCO for fieldbus units)	★
E7	IECEx Flameproof approval	★
N7	IECEx Type 'n' approval	★
I7[(1)(2)]	IECEx Intrinsic Safety	★
K7[(1)(2)]	IECEx Intrinsic Safety, Flameproof, Dust Ignition-Proof and Type n combination	★
E2[(2)]	INMETRO Flameproof	★
I2[(2)(6)]	INMETRO Intrinsic safety	★
E4[(2)]	TIIS Flameproof approval	★
E3[(2)]	NEPSI Flameproof approval	★
I3[(1)(2)]	NEPSI Intrinsic safety	★

Options (include with selected model number)

PlantWeb control functionality		
Standard		**Standard**
A01	FOUNDATION Fieldbus Advanced Control Function Block Suite	★
PlantWeb advanced diagnostic functionality		
Standard		**Standard**
D01	FOUNDATION Fieldbus Sensor and Process Diagnostic Suite: Thermocouple Diagnostic, Min/Max Tracking	★
DA1	HART Sensor and Process Diagnostic Suite: Thermocouple Diagnostic, Min/Max Tracking	★
Enhanced performance		
Standard		**Standard**
P8[(3)]	Enhanced Transmitter Accuracy	★
Mounting bracket		
Standard		**Standard**
B4	“U” Mounting Bracket for 2-inch pipe mounting - All SST	★
B5	“L” Mounting Bracket for 2-inch pipe or panel mounting - All SST	★
Display		
Standard		**Standard**
M5	LCD Display	★
External ground		
Standard		**Standard**
G1	External Ground Lug Assembly	★
Transient protector		
Standard		**Standard**
T1	Integral Transient Protector	★
Software configuration		
Standard		**Standard**
C1[(4)]	Custom Configuration of Date, Descriptor and Message (Requires CDS with order)	★

Table 1. Rosemount 3144P Temperature Transmitter ordering information

★ The Standard offering represents the most common options. The starred options (★) should be selected for best delivery. The Expanded offering is subject to additional delivery lead time.

Line filter		
Standard		**Standard**
F5	50 Hz Line Voltage Filter	★
Alarm level configuration		
Standard		**Standard**
A1	NAMUR Alarm and Saturation Levels, High Alarm	★
CN	NAMUR Alarm and Saturation Levels, Low Alarm	★
Low alarm		
Standard		**Standard**
C8	Low Alarm (Standard Rosemount Alarm and Saturation Values)	★
Sensor trim		
Standard		**Standard**
C2	Transmitter-Sensor Matching – Trim to PT100 RTD Calibration Schedule (CVD constants)	★
Expanded		
C7	Trim to Non-Standard Sensor (Special Sensor–Customer must provide sensor information)	
5-point calibration		
Standard		**Standard**
C4	5-Point Calibration (Requires the Q4 option code to generate a Calibration Certificate)	★
Calibration certification		
Standard		**Standard**
Q4	Calibration Certificate (3-Point Calibration)	★
QG	Calibration Certificate and GOST Verification Certificate	★
QP	Calibration Certificate and Tamper Evident Seal	★
Dual-input custom configuration (only with measurement type option code 2)		
Standard		**Standard**
U1[(5)]	Hot Backup	★
U2[(5)]	Average temperature with Hot Backup and Sensor Drift Alert – warning mode	★
U3[(6)]	Average temperature with Hot Backup and Sensor Drift Alert – alarm mode	★
U5	Differential temperature	★
U6[(5)]	Average temperature	★
U7[(5)]	First good temperature	★
Expanded		
U4	Two independent sensors	
Customer transfer		
Expanded		
D3[(6)(5)]	Custody Transfer Approval (Canada)	
D4[(6)]	MID Custody Transfer (Europe)	
Quality certification for safety		
Standard		**Standard**
QS	Prior-use certificate of FMEDA data (HART Only)	★
QT	Safety-certified to IEC 61508 with certificate of FMEDA data (HART only)	★

Table 1. Rosemount 3144P Temperature Transmitter ordering information

★ The Standard offering represents the most common options. The starred options (★) should be selected for best delivery. The Expanded offering is subject to additional delivery lead time.

Shipboard certification		
Standard		**Standard**
SBS	American Bureau of Shipping (ABS) Type Approval	★
SBV	Bureau Veritas (BV) Type Approval	★
SDN	Det Norske Veritas (DNV) Type Approval	★
SLL	Lloyd's Register (LR) Type Approval	★
Conduit electrical connector		
Standard		**Standard**
GE(7)	M12, 4-pin, Male Connector (*eurofast*®)	★
GM(7)	A size Mini, 4-pin, Male Connector (*minifast*®)	★
HART revision configuration		
Standard		**Standard**
HR7	Configured for HART Revision 7	★
Assemble to options		
Standard		**Standard**
XA	Sensor Specified Separately and Assembled to Transmitter	★
Typical model number: 3144P D1 A 1 E5 B4 M5		

(1) When IS approval is ordered on a FOUNDATION Fieldbus, both standard IS and FISCO IS approvals apply. The device label is marked appropriately.

(2) Consult factory for availability when ordering with HART or FOUNDATION Fieldbus models.

(3) Enhanced accuracy only applies to RTDs, however the option can be ordered with any sensor type.

(4) Consult factory for availability when ordering with FOUNDATION Fieldbus models.

(5) Option code D3 is only available to be ordered in Canada.

(6) Option code D4 is only available to be ordered in Europe.

(7) Available with Intrinsically Safe approvals only. For FM Intrinsically Safe or non-incendive approval (option code I5), install in accordance with Rosemount drawing 03151-1009 to maintain 4X rating.

Transmitter specifications

HART® and FOUNDATION™ Fieldbus

Functional specifications

Inputs
User-selectable. See Table 2 on page Wireless-9 for sensor options.

Output
2-wire device with either 4–20 mA/HART, linear with temperature or input, or completely digital output with FOUNDATION Fieldbus communication (ITK 6.0.1 compliant).

Isolation
Input/output isolation specified to 500 Vdc (500 Vrms 707 V peak) at 50/60 Hz.

Humidity limits
0–99% relative humidity.

Update time
Approximately 0.5 seconds for a single sensor (1 second for dual sensors).

Physical specifications

Conduit connections
The standard field mount housing has ½–14 NPT conduit entries. Additional conduit entry types are available, including PG13.5 (PG11), M20 X 1.5 (CM20), or JIS G ½. When any of these additional entry types are ordered, adapters are placed in the standard field housing so these alternative conduit types fit correctly. See "Dimensional drawings" on page 21 for dimensions.

Materials of construction
Electronics housing

- Low-copper aluminum or CF-8M (cast version of 316 Stainless Steel)

Paint

- Polyurethane

Cover O-rings
Buna-N

Mounting
Transmitters may be attached directly to the sensor. Optional mounting brackets (codes B4 and B5) allow for remote mounting. See "Optional Transmitter Mounting Brackets" on page 22.

Weight

Aluminum[1]	Stainless steel[1]
3.1 lb (1.4 kg)	7.8 lb (3.5 kg)

(1) Add 0.5 lb (0.2 kg) for local display or 1.0 lb (0.5 kg) for bracket options.

Enclosure ratings
Type 4X
IP66 and IP68

Stability

- RTDs: - ±0.1% of reading or 0.1 °C, whichever is greater, for 24 months.
- Thermocouples: - ±0.1% of reading or 0.1 °C, whichever is greater, for 12 months.

5 Year stability

- RTDs: - ±0.25% of reading or 0.25 °C, whichever is greater, for 5 years.
- Thermocouples: - ±0.5% of reading or 0.5 °C, whichever is greater, for 5 years.

Vibration effect
Tested to the following with no effect on performance per IEC 60770-1, 1999:

Frequency	Acceleration
10–60 Hz	0.21 mm peak displacement
60–2000 Hz	3 g

Self calibration
The analog-to-digital measurement circuitry automatically self-calibrates for each temperature update by comparing the dynamic measurement to extremely stable and accurate internal reference elements.

RFI effect
Worst case RFI effect is equivalent to the transmitter's nominal accuracy specification, according toTable 2 on page 9, when tested in accordance with IEC 61000-4-3, 30 V/m (HART) / 20 V/m (HART T/C) /10 V/m (FOUNDATION Fieldbus), 80 to 1000 MHz, with unshielded cable.

CE electromagnetic compatibility compliance testing
The Rosemount 3144P meets or exceeds all requirements listed under IEC 61326: 2006.

External ground screw assembly

The external ground screw assembly can be ordered by specifying code G1. However, some approvals include the ground screw assembly in the transmitter shipment, hence it is not necessary to order code G1. The table below identifies which approval options include the external ground screw assembly.

Approval type	External ground screw assembly included?(1)
E5, I1, I2, I5, I6, I7, K5, K6, KB, NA	No–Order option code G1
E1, E2, E3, E4, E7, K1, K7, KA, N1, N7, ND, NF	Yes

(1) The parts contained with the G1 option are included with the Integral Protector option code T1. When ordering T1, the G1 option code does not need to be ordered separately.

Hardware tag

- No charge
- 2 lines of 28 characters (56 characters total)
- Tags are stainless steel
- Permanently attached to transmitter
- Character height is $^{1}/_{16}$-in. (1.6mm)
- A wire-on tag is available upon request. 5 lines of 12 characters (60 characters total)

Software tag

- HART transmitter can store up to 8 characters in HART 5 mode and 32 characters in HART 7 mode. FOUNDATION Fieldbus transmitters can store up to 32 characters.
- Can be ordered with different software and hardware tags.
- If no software tag characters are specified, the first 8 characters of the hardware tag are the default.

Table 2. Transmitter accuracy

Sensor options	Sensor reference	Input ranges		Minimum span(1)		Digital accuracy(2)		Enhanced accuracy(3)	D/A accuracy(4)(5)
2-, 3-, 4-wire RTDs		°C	°F	°C	°F	°C	°F	°C	
Pt 100 (α = 0.00385)	IEC 751	–200 to 850	–328 to 1562	10	18	± 0.10	± 0.18	± 0.08	±0.02% of span
Pt 200 (α = 0.00385)	IEC 751	–200 to 850	–328 to 1562	10	18	± 0.22	± 0.40	± 0.176	±0.02% of span
Pt 500 (α = 0.00385)	IEC 751	–200 to 850	–328 to 1562	10	18	± 0.14	± 0.25	± 0.112	±0.02% of span
Pt 1000 (α = 0.00385)	IEC 751	–200 to 300	–328 to 572	10	18	± 0.10	± 0.18	± 0.08	±0.02% of span
Pt 100 (α = 0.003916)	JIS 1604	–200 to 645	–328 to 1193	10	18	± 0.10	± 0.18	± 0.08	±0.02% of span
Pt 200 (α = 0.003916)	JIS 1604	–200 to 645	–328 to 1193	10	18	± 0.22	± 0.40	± 0.176	±0.02% of span
Ni 120	Edison Curve No. 7	–70 to 300	–94 to 572	10	18	± 0.08	± 0.14	± 0.064	±0.02% of span
Cu 10	Edison Copper Winding No. 15	–50 to 250	–58 to 482	10	18	±1.00	± 1.80	± 0.08	±0.02% of span
Pt 50 (α=0.00391)	GOST 6651-94	–200 to 550	–328 to 1022	10	18	±0.20	±0.36	± 0.16	±0.02% of span
Pt 100 (α=0.00391)	GOST 6651-94	–200 to 550	–328 to 1022	10	18	±0.10	±0.18	± 0.08	±0.02% of span
Cu 50 (α=0.00426)	GOST 6651-94	–50 to 200	–58 to 392	10	18	±0.34	±0.61	± 0.272	±0.02% of span
Cu 50 (α=0.00428)	GOST 6651-94	–185 to 200	–301 to 392	10	18	±0.34	±0.61	± 0.272	±0.02% of span
Cu 100 (α=0.00426)	GOST 6651-94	–50 to 200	–58 to 392	10	18	±0.17	±0.31	± 0.136	±0.02% of span
Cu 100 (α=0.00428)	GOST 6651-94	–185 to 200	–301 to 392	10	18	±0.17	±0.31	± 0.136	±0.02% of span

Thermocouples[6]									
Type B[7]	NIST Monograph 175, IEC 584	100 to 1820	212 to 3308	25	45	± 0.75	± 1.35		±0.02% of span
Type E	NIST Monograph 175, IEC 584	–50 to 1000	–58 to 1832	25	45	± 0.20	± 0.36		±0.02% of span
Type J	NIST Monograph 175, IEC 584	–180 to 760	–292 to 1400	25	45	± 0.25	± 0.45		±0.02% of span
Type K[8]	NIST Monograph 175, IEC 584	–180 to 1372	–292 to 2501	25	45	± 0.25	± 0.45		±0.02% of span
Type N	NIST Monograph 175, IEC 584	–200 to 1300	–328 to 2372	25	45	± 0.40	± 0.72		±0.02% of span
Type R	NIST Monograph 175, IEC 584	0 to 1768	32 to 3214	25	45	± 0.60	± 1.08		±0.02% of span
Type S	NIST Monograph 175, IEC 584	0 to 1768	32 to 3214	25	45	± 0.50	± 0.90		±0.02% of span
Type T	NIST Monograph 175, IEC 584	–200 to 400	–328 to 752	25	45	± 0.25	± 0.45		±0.02% of span
DIN Type L	DIN 43710	–200 to 900	–328 to 1652	25	45	± 0.35	± 0.63		±0.02% of span
DIN Type U	DIN 43710	–200 to 600	–328 to 1112	25	45	± 0.35	± 0.63		±0.02% of span
Type W5Re/W26Re	ASTM E 988-96	0 to 2000	32 to 3632	25	45	± 0.70	± 1.26		±0.02% of span
GOST Type L	GOST R 8.585-2001	–200 to 800	–392 to 1472	25	45	± 0.25	± 0.45		±0.02% of span
Other input types									
Millivolt Input		–10 to 100 mV		3 mV		±0.015 mV			±0.02% of span
2-, 3-, 4-wire Ohm Input		0 to 2000 ohms		20 ohm		±0.35 ohm			±0.02% of span

(1) No minimum or maximum span restrictions within the input ranges. Recommended minimum span will hold noise within accuracy specification with damping at zero seconds.

(2) Digital accuracy: Digital output can be accessed by the Field Communicator.

(3) Enhanced accuracy can be ordered using the P8 Model Code.

(4) Total Analog accuracy is the sum of digital and D/A accuracies.

(5) Applies to HART / 4-20 mA devices.

(6) Total digital accuracy for thermocouple measurement: sum of digital accuracy +0.25 °C (0.45 °F) (cold junction accuracy).

(7) Digital accuracy for NIST Type B is ±3.0 °C (±5.4 °F) from 100 to 300 °C (212 to 572 °F).

(8) Digital accuracy for NIST Type K is ±0.50 °C (±0.9 °F) from –180 to –90 °C (–292 to –130 °F).

Reference accuracy example (HART only)

When using a Pt 100 (α = 0.00385) sensor input with a 0 to 100 °C span: Digital Accuracy would be ±0.10 °C, D/A accuracy would be ±0.02% of 100 °C or ±0.02 °C, Total = ±0.12 °C.

Differential capability exists between any two sensor types (dual-sensor option)

For all differential configurations, the input range is X to Y where:

- X = Sensor 1 minimum – Sensor 2 maximum *and*
- Y = Sensor 1 maximum – Sensor 2 minimum.

Ambient temperature effect

Transmitters may be installed in locations where the ambient temperature is between –40 and 85 °C (–40 and 185 °F). To maintain excellent accuracy performance, each transmitter is individually characterized over this ambient temperature range at the factory.

Table 3. Ambient temperature effect on digital accuracy

Sensor options	Sensor reference	Effect per 1.0 °C (1.8 °F) change in ambient[(1)]	Input temperature (T)	D/A effect[(2)]
2-, 3-, or 4- Wire RTDs				
Pt 100 (α = 0.00385)	IEC 751	0.0015 °C (0.0027 °F)	Entire Sensor Input Range	0.001% of span
Pt 200 (α = 0.00385)	IEC 751	0.0023 °C (0.00414 °F)	Entire Sensor Input Range	0.001% of span
Pt 500 (α = 0.00385)	IEC 751	0.0015 °C (0.0027 °F)	Entire Sensor Input Range	0.001% of span
Pt 1000 (α = 0.00385)	IEC 751	0.0015 °C (0.0027 °F)	Entire Sensor Input Range	0.001% of span
Pt 100 (α = 0.003916)	JIS 1604	0.0015 °C (0.0027 °F)	Entire Sensor Input Range	0.001% of span
Pt 200 (α = 0.003916)	JIS 1604	0.0023 °C (0.00414 °F)	Entire Sensor Input Range	0.001% of span
Ni 120	Edison Curve No. 7	0.0010 °C (0.0018 °F)	Entire Sensor Input Range	0.001% of span
Cu 10	Edison Copper Winding No. 15	0.015 °C (0.0027 °F)	Entire Sensor Input Range	0.001% of span
Pt 50 (α = 0.00391)	GOST 6651-94	0.003 °C (0.0054 °F)	Entire Sensor Input Range	0.001% of span
Pt 100 (α = 0.00391)	GOST 6651-94	0.0015 °C (0.0027 °F)	Entire Sensor Input Range	0.001% of span
Cu 50 (α =0.00426)	GOST 6651-94	0.003 °C (0.0054 °F)	Entire Sensor Input Range	0.001% of span
Cu 50 (α =0.00428)	GOST 6651-94	0.003 °C (0.0054 °F)	Entire Sensor Input Range	0.001% of span
Cu 100 (α =0.00426)	GOST 6651-94	0.0015 °C (0.0027 °F)	Entire Sensor Input Range	0.001% of span
Cu 100 (α =0.00428)	GOST 6651-94	0.0015 °C (0.0027 °F)	Entire Sensor Input Range	0.001% of span
Thermocouples				
Type B	NIST Monograph 175, IEC 584	0.014 °C 0.029 °C – 0.0021% of (T – 300) 0.046 °C – 0.0086% of (T – 100)	T ≥ 1000 °C 300 °C ≤ T < 1000 °C 100 °C ≤ T < 300 °C	0.001% of span
Type E	NIST Monograph 175, IEC 584	0.004 °C + 0.00043% of T		0.001% of span
Type J	NIST Monograph 175, IEC 584	0.004 °C + 0.00029% of T 0.004 °C + 0.0020% of abs. val. T	T ≥ 0 °C T < 0 °C	0.001% of span
Type K	NIST Monograph 175, IEC 584	0.005 °C + 0.00054% of T 0.005 °C + 0.0020% of abs. val. T	T ≥ 0 °C T < 0 °C	0.001% of span
Type N	NIST Monograph 175, IEC 584	0.005 °C + 0.00036% of T	All	0.001% of span
Types R	NIST Monograph 175, IEC 584	0.015 °C 0.021 °C – 0.0032% of T	T ≥ 200 °C T < 200 °C	0.001% of span
Types S	NIST Monograph 175, IEC 584	0.015 °C 0.021 °C – 0.0032% of T	T ≥ 200 °C T < 200 °C	0.001% of span
Type T	NIST Monograph 175, IEC 584	0.005 °C 0.005 °C + 0.0036% of abs. val. T	T ≥ 0 °C T < 0 °C	0.001% of span
DIN Type L	DIN 43710	0.0054 °C + 0.00029% of R 0.0054 °C + 0.0025% of abs. val. T	T ≥ 0 °C T < 0 °C	0.001% of span
DIN Type U	DIN 43710	0.0064 °C 0.0064 °C + 0.0043% of abs. val. T	T ≥ 0 °C T < 0 °C	0.001% of span
Type W5Re/W26Re	ASTM E 988-96	0.016 °C 0.023 °C + 0.0036% of T	T ≥ 200 °C T < 200 °C	0.001% of span
GOST Type L	GOST R 8.585-2001	0.005 > 0 °C 0.005 - 0.003% < 0 °C		0.001% of span

Sensor options	Sensor reference	Effect per 1.0 °C (1.8 °F) change in ambient[1]	Input temperature (T)	D/A effect[2]
Other input types				
Millivolt Input		0.00025 mV	Entire Sensor Input Range	0.001% of span
2-, 3-, 4-wire Ohm Input		0.007 Ω	Entire Sensor Input Range	0.001% of span

(1) Change in ambient is in reference to the calibration temperature of the transmitter (20 °C [68 °F]).

(2) Applies to HART / 4-20 mA devices.

Temperature effects example

When using a Pt 100 (α = 0.00385) sensor input with a 0 to 100 °C span at 30 °C ambient temperature, the following statements would be true:

Digital temp effects

- $0.0015 \frac{^\circ C}{^\circ C} \times (30\ ^\circ C - 20\ ^\circ C) = 0.015\ ^\circ C$

D/A effects (HART / 4–20 mA only)%

- [0.01% / °C of span] x |(Ambient temp - Calibrated temp)| = D/A Effects
- [0.01% / °C x 100] x |(30 - 20)| = 0.01 °C

Worst case error

- Digital + D/A + Digital Temp Effects + D/A Effects = 0.10 °C + 0.02 °C + 0.015 °C + 0.01 °C = 0.145 °C

HART / 4–20 mA specifications

Power supply

External power supply required. Transmitters operate on 12.0 to 42.4 Vdc transmitter terminal voltage (with 250 ohm load, 18.1 Vdc power supply voltage is required). Transmitter power terminals rated to 42.4 Vdc.

Wiring diagram

See Figure 1 on page 23.

Alarms

Custom factory configurations of alarm and saturation levels are available for valid values with option code C1. These values can also be configured in the field using a Field Communicator.

Transient protection (option code T1)

The transient protector helps to prevent damage to the transmitter from transients induced on the loop wiring by lightning, welding, heavy electrical equipment, or switch gears. The transient protection electronics are contained in an add-on assembly that attaches to the standard transmitter terminal block. The external ground lug assembly (code G1) is included with the Transient Protector. The transient protector has been tested per the following standard:

- IEEE C62.41-1991 (IEEE 587)/ Location Categories B3. 6kV/3kA peak (1.2 × 50 µS Wave 8 × 20 µS Combination Wave) 6kV/0.5kA peak (100 kHz Ring Wave) EFT, 4kVpeak, 2.5kHz, 5*50nS
- Loop resistance added by protector: 22 ohms max.
- Nominal clamping voltages: 90 V (common mode), 77 V (normal mode)

Local display

Optional five-digit LCD display includes 0–100% bar graph. Digits are 0.4 inches (8 mm) high. Display options include engineering units (°F, °C, °R, K, ohms, and millivolts), percent, and milliamperes. The display can also be set to alternate between engineering units/milliamperes, Sensor 1/Sensor 2, Sensor 1/Sensor 2/Differential Temperature, and Sensor 1/Sensor2/Average Temperature. All display options, including the decimal point, may be reconfigured in the field using a Field Communicator or AMS.

Turn-on time

Performance within specifications is achieved less than 6 seconds after power is applied to the transmitter when the damping value is set to 0 seconds.

Power supply effect

Less than ±0.005% of span per volt.

SIS safety transmitter failure values

IEC 61508 Safety Certified SIL 2 and SIL 3 Claim Limit

- Safety accuracy: Span ≥ 100 °C: ± 2% of process variable span
- Span < 100 °C: ± 2 °C
- Safety response time: 5 seconds
- Safety specifications and FMEDA Report available at www. rosemount.com/safety
- Software suitable for SIL3 Applications

Temperature limits

Description	Operating limit	Storage limit
Without LCD	–40 to 185 °F –40 to 85 °C	–60 to 250 °F –50 to 120 °C
With LCD(1)	–40 to 185 °F –40 to 85 °C	–40 to 185 °F –40 to 85 °C

(1) LCD display may not be readable and LCD updates will be slower at temperatures below -4 °F (-20 °C).

Field communicator connections

Field Communicator connections are permanently fixed to power/signal block.

Failure mode

The Rosemount 3144P features software and hardware failure mode detection. An independent circuit is designed to provide backup alarm output if the microprocessor hardware or software fails.

The alarm level is user-selectable using the failure mode switch. If failure occurs, the position of the hardware switch determines the direction in which the output is driven (HIGH or LOW). The switch feeds into the digital-to-analog (D/A) converter, which drives the proper alarm output even if the microprocessor fails. The values at which the transmitter drives its output in failure mode depends on whether it is configured to standard, or NAMUR-compliant (NAMUR recommendation NE 43) operation. The values for standard and NAMUR-compliant operation are as follows:

Table 4. Operation parameters

	Standard (1)	NAMUR-compliant(1)
Linear Output:	3.9 ≤ I ≤ 20.5	3.8 ≤ I ≤ 20.5
Fail HIGH:	21.75 ≤ I ≤ 23 (default)	21.5 ≤ I ≤ 23 (default)
Fail Low:	I ≤ 3.75	I ≤ 3.6

(1) Measured in milliamperes.

Load limitations

Maximum load = 40.8 X (supply voltage - 12.0)(1)

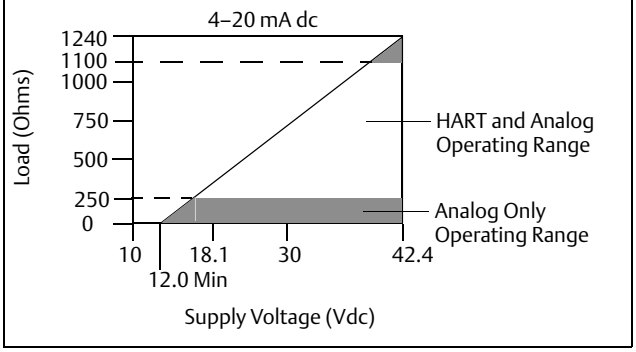

(1) Without transient protection (optional).

Note

HART Communication requires a loop resistance between 250 and 1100 ohms. Do not communicate with the transmitter when power is below 12 Vdc at the transmitter terminals.

FOUNDATION Fieldbus specifications

Fieldbus Foundation Device Registration

Device Tested and Registered to ITK 6.0.1

Power supply

Powered over FOUNDATION Fieldbus with standard fieldbus power supplies. Transmitters operate on 9.0 to 32.0 Vdc, 12 mA maximum. Transmitter power terminals are rated to 42.4 Vdc.

Wiring diagram

See Figure 2 on page 23.

Alarms

The AI function block allows the user to configure the alarms to HIGH-HIGH, HIGH, LOW, or LOW-LOW with a variety of priority levels and hysteresis settings.

Transient protection (option code T1)

The transient protector helps to prevent damage to the transmitter from transients induced on the loop wiring by lightning, welding, heavy electrical equipment, or switch gears. The transient protection electronics are contained in an add-on assembly that attaches to the standard transmitter terminal block. The transient terminal block is not polarity insensitive. The transient protector has been tested to the following standard:

- IEEE C62.41-1991 (IEEE 587)/ Location Categories B3.
  6kV/3kA peak (1.2 × 50 μS Wave 8 × 20 μS Combination Wave)
  6kV/0.5kA peak (100 kHz Ring Wave)
  EFT, 4kVpeak, 2.5kHz, 5*50nS
- Loop resistance added by protector: 22 ohms maximum
- Nominal clamping voltages: 90 V (common mode), 77 V (normal mode)

Diagnostics suite for FOUNDATION Fieldbus (option code D01)

The 3144P Diagnostics Suite for FOUNDATION Fieldbus provides advanced functionality in the form of Statistical Process Monitoring (SPM), a thermocouple Diagnostic, and Sensor Drift Alert. SPM technology calculates the mean and standard deviation of the process variable and makes them available to the user. This may be used to detect abnormal process situations.

The Thermocouple Diagnostic enables the 3144P to measure and monitor the resistance of thermocouple loops in order to detect drift or changing wiring connections.

Sensor Drift Alert allows the user to monitor the difference in measurement between two sensors installed in one process point. A change in this differential value may indicate drifting sensors.

Local display

Displays all DS_65 measurements in the Transducer and Function Blocks including Sensor 1, Sensor 2, differential, and terminal temperatures. The display alternates up to four selected items. The meter can display up to five digits in engineering units (°F, °C, °R, K, Ω, and millivolts). Display settings are configured at the factory according to the transmitter configuration (standard or custom). These settings can be reconfigured in the field using a Field Communicator or DeltaV. In addition, the LCD provides the ability to display DS_65 parameters from other devices. In addition to the configuration of the meter, sensor diagnostic data is displayed. If the measurement status is Good, the measured value is shown. If the measurement status is Uncertain, the status indicating uncertain is shown in addition to the measured value. If the measurement status is Bad, the reason for the bad measurement is shown.

Note: When ordering a spare electronics module assembly, the LCD transducer block will display the default parameter.

Turn-on time

Performance within specifications is achieved less than 20 seconds after power is applied to the transmitter when the damping value is set to 0 seconds.

Status

The device is compliant to NAMUR NE 107, ensuring consistent, reliable and standardized device diagnostic information.

The new standard is designed to improve the way device status and diagnostic information is communicated to operators and maintenance personnel in order to increase productivity and reduce costs.

If self-diagnostics detect a sensor burnout or a transmitter failure, the status of the measurement will be updated accordingly. The status may also send the PID output to a safe value.

FOUNDATION Fieldbus parameters

Schedule Entries	25 (max.)
Links	30 (max.)
Virtual Communications Relationships (VCR)	20 (max.)

Backup Link Active Scheduler (LAS)

The transmitter is classified as a device link master, which means it can function as a Link Active Scheduler (LAS) if the current link master device fails or is removed from the segment. The host or other configuration tool is used to download the schedule for the application to the link master device. In the absence of a primary link master, the transmitter will claim the LAS and provide permanent control for the H1 segment.

Function blocks

- All blocks will ship with unique block names, e.g. AI_1400_XXXX
- All blocks shall be instantiated to avoid invalid defaults
- All Rosemount 3144P FF have parameter COMPATIBILITY_REV for backward compatibility
- Parameters will be initialized to common values for easier bench configuration
- All default block tags are less than or equal to 16 characters in length to avoid inconvenience of apparently identical tags
- Default block tags include underscores, "_", instead of whitespaces for easier configuration

Resource block

- Contains physical transmitter information including available memory, manufacture identification, device type, software tag, and unique identification.
- PlantWeb Alerts enable the full power of the PW digital architecture by diagnosing instrumentation issues, communicating the details, and recommending a solution.

Transducer block

- Contains the actual temperature measurement data, including sensor 1, sensor 2, and terminal temperature.
- Includes information about sensor type and configuration, engineering units, linearization, range, damping, and diagnostics.
- Device Revision 3 and above includes Hot Backup functionality in the transducer block

LCD block (when an LCD display is used)

- Configures the local display.

Analog input (AI)

- Processes the measurement and makes it available on the fieldbus segment.
- Allows filtering, engineering unit, and alarm changes.
- All devices ship with the AI blocks scheduled, meaning no configuration is needed if the factory default channels are used

PID block (provides control functionality)

- Performs single loop, cascade, or feedforward control in the field.

Block	Execution time
Resource	–
Transducer	–
LCD Block	–
Advanced Diagnostics	–
Analog Input 1, 2, 3, 4	60 milliseconds
PID 1 and 2 with Autotune	90 milliseconds
Input Selector	65 milliseconds
Signal Characterizer	60 milliseconds
Arithmetic	60 milliseconds
Output Splitter	60 milliseconds

Product certifications

European Directive Information

A copy of the EC Declaration of Conformity can be found at the end of the Quick Start Guide. The most recent revision of the EC Declaration of Conformity can be found at www.rosemount.com.

Ordinary Location Certification from FM Approvals

As standard, the transmitter has been examined and tested to determine that the design meets the basic electrical, mechanical, and fire protection requirements by FM Approvals, a nationally recognized test laboratory (NRTL) as accredited by the Federal Occupational Safety and Health Administration (OSHA).

North America

E5 FM Explosionproof, Dust-Ignitionproof, and Nonincendive

Certificate: 3012752

Standards Used: FM Class 3600: 1998, FM Class 3611: 2004, FM Class 3615: 1989, FM Class 3810: 2005, NEMA-250: 1991, ANSI/ISA 60079-0: 2009, ANSI/ISA 60079-11: 2009

Markings: XP CL I, DIV 1, GP A, B, C, D; T5(-50 °C ≤ Ta ≤ +85 °C); DIP CL II/III, DIV 1, GP E, F, G; T5(-50 °C ≤ Ta ≤ +75 °C); T6(-50 °C ≤ Ta ≤ +60 °C); when installed per Rosemount drawing 03144-0320; NI CL I, DIV 2, GP A, B, C, D; T5(-60 °C ≤ Ta ≤ +75 °C); T6(-60 °C ≤ Ta ≤ +50 °C); when installed per Rosemount drawing 03144-0321, 03144-5075;

I5 FM Intrinsic Safety and Nonincendive

Certificate: 3012752

Standards Used: FM Class 3600: 1998, FM Class 3610: 2010, FM Class 3611: 2004, FM Class 3810: 2005, NEMA-250: 1991, ANSI/ISA 60079-0: 2009, ANSI/ISA 60079-11: 2009

Markings: IS CL I / II / III, DIV 1, GP A, B, C, D, E, F, G; T4(-60 °C ≤ Ta ≤ +60 °C); IS [Entity] CL I, Zone 0, AEx ia IIC T4(-60 °C ≤ Ta ≤ +60 °C); NI CL I, DIV 2, GP A, B, C, D; T5(-60 °C ≤ Ta ≤ +75 °C); T6(-60 °C ≤ Ta ≤ +50 °C); when installed per Rosemount drawing 03144-0321, 03144-5075;

I6 CSA Intrinsic Safety and Division 2

Certificate: 1242650

Standards Used: CAN/CSA C22.2 No. 0-M91 (R2001), CAN/CSA-C22.2 No. 94-M91, CSA Std C22.2 No. 142-M1987, CAN/CSA-C22.2 No. 157-92, CSA Std C22.2 No. 213-M1987;

Markings: Intrinsically Safe for Class I Groups A, B, C, D; Class II, Groups E, F, G; Class III;

Intrinsically Safe for Class I Zone 0 Group IIC; T4

(-50 °C ≤ Ta ≤ +60 °C); Type 4X;

Suitable for Class I, Div. 2, Groups A, B, C, D;

Suitable for Class I Zone 2 Group IIC; T6(-60 °C ≤ Ta ≤ +60 °C); T5(-60 °C ≤ Ta ≤ +85 °C); when installed per Rosemount drawing 03144-5076;

K6 CSA Explosionproof, Intrinsic Safety and Division 2

Certificate: 1242650

Standards Used: CAN/CSA C22.2 No. 0-M91 (R2001), CSA Std C22.2 No. 30-M1986; CAN/CSA-C22.2 No. 94-M91, CSA Std C22.2 No. 142-M1987, CAN/CSA-C22.2 No. 157-92, CSA Std C22.2 No. 213-M1987;

Markings: Explosionproof for Class I, Groups A, B, C, D; Class II, Groups E, F, G; Class III;

Suitable for Class I Zone 1 Group IIC;

Intrinsically Safe for Class I Groups A, B, C, D; Class II, Groups E, F, G; Class III;

Suitable for Class I Zone 0 Group IIC; T4(-50 °C ≤ Ta ≤ +60 °C); Type 4X;

Suitable for Class I, Div. 2, Groups A, B, C, D;

Suitable for Class I Zone 2 Group IIC; T6(-60 °C ≤ Ta ≤ +60 °C); T5(-60 °C ≤ Ta ≤ +85 °C); when installed per Rosemount drawing 03144-5076;

Europe

E1 ATEX Flameproof

Certificate: FM12ATEX0065X

Standards Used: EN 60079-0: 2012, EN 60079-

1: 2007, EN 60529:1991 +A1:2000

Markings: ⟨Ex⟩ II 2 G Ex d IIC T6...T1 Gb, T6(-50 °C ≤ Ta ≤ +40 °C), T5...T1(-50 °C ≤ Ta ≤ +60 °C);

See Table 5 at the end of the Product Certifications section for Process Temperatures.

Special conditions for safe use (X):

1. See certificate for ambient temperature range.
2. The non-metallic label may store an electrostatic charge and become a source of ignition in Group III environments.
3. Guard the LCD cover against impact energies greater than 4 joules.
4. Consult the manufacturer if dimensional information on the flameproof joints is necessary.

I1 ATEX Intrinsic Safety

Certificate: BAS01ATEX1431X

Standards Used: EN 60079-0: 2012; EN 60079-11:2012;

Markings: ⟨Ex⟩ II 1 G Ex ia IIC T5/T6 Ga; T6(-60 °C ≤ Ta ≤ +50 °C), T5(-60 °C ≤ Ta ≤ +75 °C);

See Table 6 at the end of the Product Certifications section for Entity Parameters

Special conditions for safe use (X):

1. When fitted with the transient terminal options, the equipment is not capable of passing the 500 V insulation test. This must be taken into account during installation.
2. The enclosure may be made from aluminum alloy with a protective polyurethane paint finish; however, care should be taken to protect it from impact or abrasion when located in Zone 0.

N1 ATEX Type n

Certificate: BAS01ATEX3432X

Standards Used: EN 60079-0:2012, EN 60079-15:2010

Markings: ⟨Ex⟩ II 3 G Ex nA IIC T5/T6 Gc; T6

(-40 °C ≤ Ta ≤ +50 °C), T5(-40 °C ≤ Ta ≤ +75 °C);

Special conditions for safe use (X):

1. When fitted with the transient terminal options, the equipment is not capable of withstanding the 500 V electrical strength test as defined in clause 6.5.1 of EN 60079-15: 2010. This must be taken into account during installation.

ND ATEX Dust

Certificate: FM12ATEX0065X

Standards Used: EN 60079-0: 2012, EN 60079-31: 2009, EN 60529:1991 +A1:2000

Markings: ⟨Ex⟩ II 2 D Ex tb IIIC T130°C Db, (-40 °C ≤ Ta ≤ +70 °C); IP66

See Table 5 at the end of the Product Certifications section for Process Temperatures.

Special conditions for safe use (X):

1. See certificate for ambient temperature range
2. The non-metallic label may store an electrostatic charge and become a source of ignition in Group III environments.
3. Guard the LCD cover against impact energies greater than 4 joules.
4. Consult the manufacturer if dimensional information on the flameproof joints is necessary.

International

E7 IECEx Flameproof

Certificate: IECEx FMG 12.0022X

Standards Used: IEC 60079-0:2011, IEC 60079-1:2007-04, IEC 60079-31:2008

Markings: Ex d IIC T6...T1 Gb, T6(-50 °C ≤ Ta ≤ +40 °C), T5...T1(-50 °C ≤ Ta ≤ +60 °C);

Ex tb IIIC T130 °C Db, (-40 °C ≤ Ta ≤ +70 °C); IP66;

See Table 5 at the end of the Product Certifications section for Process Temperatures.

Special conditions for safe use (X):

1. See certificate for ambient temperature range
2. The non-metallic label may store an electrostatic charge and become a source of ignition in Group III environments
3. Guard the LCD cover against impact energies greater than 4 joules
4. Consult the manufacturer if dimensional information on the flameproof joints is necessary

I7 IECEx Intrinsic Safety

Certificate: IECEx BAS 07.0002X

Standards Used: IEC 60079-0: 2011; IEC 60079-11: 2011;

Markings: Ex ia IIC T5/T6 Ga; T6(-60 °C ≤ Ta ≤ +50 °C), T5(-60 °C ≤ Ta ≤ +75 °C);

See Table 6 at the end of the Product Certifications section for Entity Parameters.

Special conditions for safe use (X):

1. When fitted with the transient terminal options, the apparatus is not capable of withstanding the 500 V electrical strength test as defined in Clause 6.3.13 of IEC 60079-11: 2011. This must be taken into account during installation.
2. The enclosure may be made from aluminum alloy with a protective polyurethane paint finish; however, care should be taken to protect it from impact or abrasion when located in Zone 0.

N7 IECEx Type n

Certificate: IECEx BAS 070003X

Standards: IEC 60079-0:2011, IEC 60079-15:2010

Markings: Ex nA IIC T5/T6 Gc; T6(-40 °C ≤ Ta ≤ +50 °C), T5(-40 °C ≤ Ta ≤ +75 °C);

Brazil

E2 INMETRO Flameproof

Certificate: CEPEL 04.0307X

Standards Used: ABNT NBR IEC 60079-0:2008, ABNT NBR IEC 60079-1:2009, ABNT NBR IEC 60079-26:2008, ABNT NBR IEC 60529:2009

Markings: Ex d IIC T* Gb; T6(-40 °C ≤ Ta ≤ +65 °C), T5(-40 °C ≤ Ta ≤ +80 °C)

Special conditions for safe use (X):

1. The accessory of cable entries or conduit must be certified as flameproof and needs to be suitable for use conditions.

2. For ambient temperature above 60 °C, cable wiring must have minimum isolation for temperature 90 °C, to be in accordance to equipment operation temperature.
3. Where electrical entry is via conduit, the required sealing device must be assembled immediately close to enclosure.

I2 INMETRO Intrinsic Safety

Certificate: CEPEL 05.0723X

Standards: ABNT NBR IEC 60079-0:2008, ABNT NBR IEC 60079-11:2009, ABNT NBR IEC 60079-26:2008, ABNT NBR IEC 60529:2009

Markings: Ex ia IIC T* Ga; T6(-60 ° C ≤ Ta ≤ +50 °C), T5(-60 °C ≤ Ta ≤ +75 °C), T4(-60 °C ≤ Ta ≤+60 °C); IP66(Aluminum enclosures), IP66W (Stainless Steel enclosures)

See Table 6 at the end of the Product Certifications section for Entity Parameters.

Special conditions for safe use (X):

1. The apparatus enclosure may contain light metals. The apparatus must be installed in such a manner as to minimize the risk of impact or friction with other metal surfaces.
2. A transient protection device can be fitted as an option, in which the equipment will not pass the 500 V test.

China

E3 China Flameproof

Certificate: GYJ11.1650X

Standards: GB3836.1-2000, GB3836.2-2010

Markings: Ex d IIC T5/T6 Gb

Special conditions for safe use (X):

1. Symbol “X” is used to denote specific conditions of use: For information on the dimensions of the flameproof joints the manufacturer shall be contacted. This shall be mentioned in the manual.
2. Relation between T code and ambient temperature range is:

T Code	Ambient Temperature
T6	-40 °C ≤ Ta ≤ +70 °C
T5	-40 °C ≤ Ta ≤ +80 °C

3. The earth connection facility in the enclosure should be connected reliably.
4. During installation, there should be no mixture harmful to flameproof housing.
5. During installation in hazardous location. Cable glands, conduits and blanking plugs, certified by state-appointed inspection bodies with Ex d IIC Gb degree, should be used.
6. During installation, use and maintenance in explosive gas atmospheres, observe the warning “Do not open when energized”.
7. End users is not permitted to change any components insides, but to settle the problem in conjunction with manufacturer to avoid damage to the product.
8. When installation, use and maintenance of this product, observe following standards:

   GB3836.13-1997 “Electrical apparatus for explosive gas atmospheres Part 13: Repair and overhaul for apparatus used in explosive gas atmospheres”

   GB3836.15-2000 “Electrical apparatus for explosive gas atmospheres Part 15: Electrical installations in hazardous area (other than mines)”

   GB3836.16-2006 “Electrical apparatus for explosive gas atmospheres Part 16: Inspection and maintenance of electrical installation (other than mines)”

   GB50257-1996 “Code for construction and acceptance of electric device for explosion atmospheres and fire hazard electrical equipment installation engineering”

I3 China Intrinsic Safety

Certificate: GYJ11.1536X

Standards Used: GB3836.1-2000, GB3836.4-2010

Markings: Ex ia IIC T4/T5/T6

Special conditions for safe use (X):

1. Symbol “X” is used to denote specific conditions of use:
   a. The enclosure may contain light metal, attention should be taken to avoid ignition hazard due to impact or friction when used in Zone 0.
   b. When fitted with the “Transient Terminal Option”, this apparatus is not capable of withstanding the 500 V r.m.s. insulation test required by Clause 6.3.12 of GB3836.4-2010

2. Relation between T code and ambient temperature range is:

T Code	Ambient Temperature
T6	-60 °C ≤ Ta ≤ +50 °C
T5	-60 °C ≤ Ta ≤ +70 °C

3. Parameters:

Power/loop terminals (+ and -)

Maximum input Voltage: U_i (V)	Maximum input Current: I_i (mA)	Maximum input Power: P_i (W)	Maximum internal parameters:	
			C_i (nF)	L_i (µH)
30	300	1	5	0

Sensor Terminal (1 to 5)

Maximum Input Voltage: U_o (V)	Maximum input Current: I_o (mA)	Maximum input Power: P_o (W)	Maximum internal parameters:	
			C_i (nF)	L_i (µH)
13.6	56	0.19	78	0

Load connected to sensor terminals (1 to 5)

Group	Maximum external parameters	
	C_o (µF)	L_o (µH)
IIC	0.74	11.7
IIB	5.12	44
IIA	18.52	94

Temperature transmitters comply to the requirements for FISCO field devices specified in GB3836.19-2010. FISCO parameters are as follows:

Maximum input Voltage: U_i (V)	Maximum input Current: I_i (mA)	Maximum input Power: P_i (W)	Maximum internal parameters:	
			C_i (nF)	L_i (µH)
17.5	380	5.32	2.1	0

4. The product should be used with Ex-certified associated apparatus to establish explosion protection system that can be used in explosive gas atmospheres. Wiring and terminals should comply with the instruction manual of the product and associated apparatus.

5. The cables between this product and associated apparatus should be shielded cables (the cables must have insulated shield). The shielded has to be grounded reliably in non-hazardous area.

6. End users are not permitted to change any components insides, but to settle the problem in conjunction with manufacturer to avoid damage to the product.

7. When installation, use and maintenance of this product, observe following standards:

   GB3836.13-1997 “Electrical apparatus for explosive gas atmospheres Part 13: Repair and overhaul for apparatus used in explosive gas atmospheres”

   GB3836.15-2000 “Electrical apparatus for explosive gas atmospheres Part 15: Electrical installations in hazardous area (other than mines)”

   GB3836.6-2006 “Electrical apparatus for explosive gas atmospheres Part 16: Inspection and maintenance of electrical installation (other than mines)”

   GB50257-1996 “Code for construction and acceptance of electric device for explosion atmospheres and fire hazard electrical equipment installation engineering”

Japan

E4 TIIS Flameproof

Certificate: TC16120, TC16121

Markings: Ex d IIB T6 (-20 °C ≤ Ta ≤ +55 °C)

Certificate: TC16127, TC16128, TC16129, TC16130

Markings: Ex d IIB T4 (-20 °C ≤ Ta ≤ +55 °C)

Combinations

K1 Combination of E1, I1, N1, and ND
K2 Combination of E2 and I2
K5 Combination of E5 and I5
K7 Combination of E7, I7, N7
KA Combination of K1 and K6
KB Combination of K5, I6, and K6

Tables

Table 5. Process temperatures

Temperature class	Ambient temperature	Process temperature w/o LCD cover (°C)			
		No ext.	3 in.	6 in.	9 in.
T6	-50 °C to +40 °C	55	55	60	65
T5	-50 °C to +60 °C	70	70	70	75
T4	-50 °C to +60 °C	100	110	120	130
T3	-50 °C to +60 °C	170	190	200	200
T2	-50 °C to +60 °C	280	300	300	300
T1	-50 °C to +60 °C	440	450	450	450

Table 6. Entity parameters

	Fieldbus/Profibus	HART 5
Voltage U_i (V)	30	30
Current I_i (mA)	300	300
Power P_i (W)	1	1.3
Capacitance C_i (nF)	5	2.1
Inductance L_i (mH)	0	0

Dimensional drawings

Transmitter exploded view

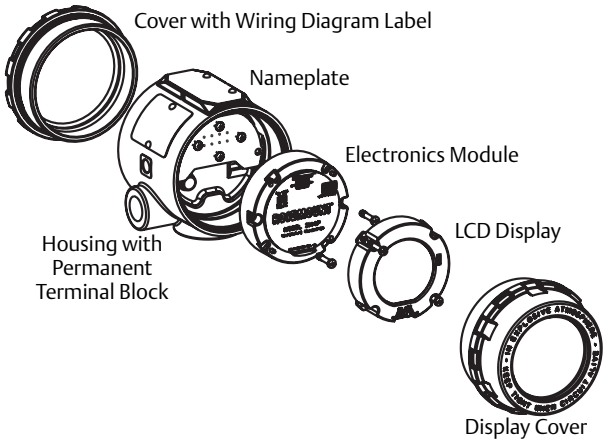

Switch location

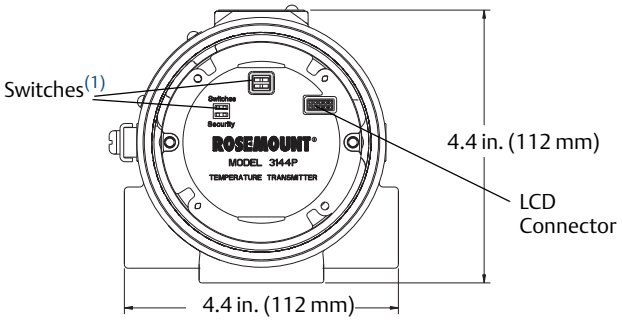

(1) Alarm and Write Protect (HART), Simulate and Write Protect (FOUNDATION Fieldbus)

LCD display faceplate

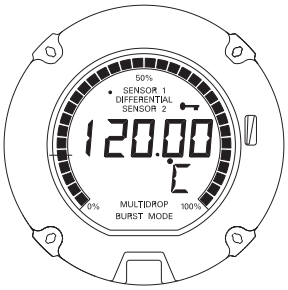

Transmitter dimensional drawing

Top view

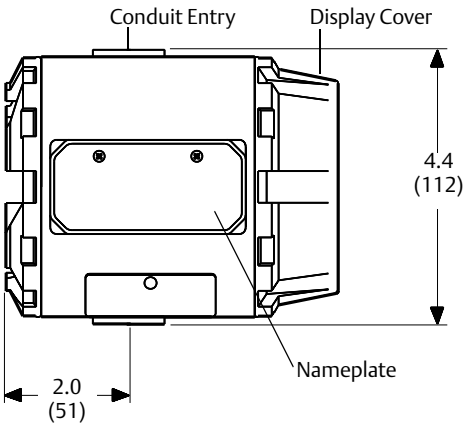

Side view

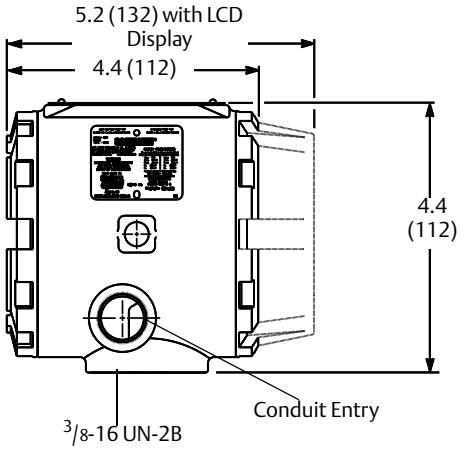

Dimensions are in inches (millimeters).

Transmitter dimensional drawing for conduits with M20 x 1.5, PG 13.5, and JIS G 1/2 entries

Top view

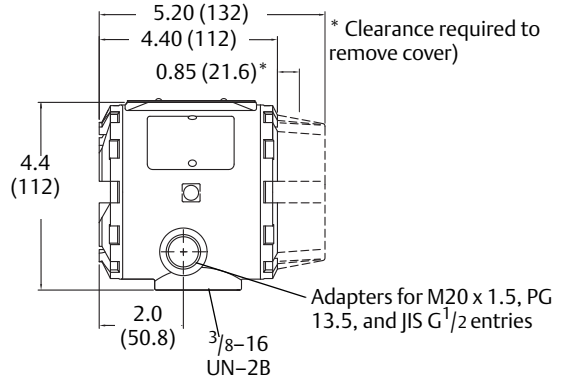

Front view

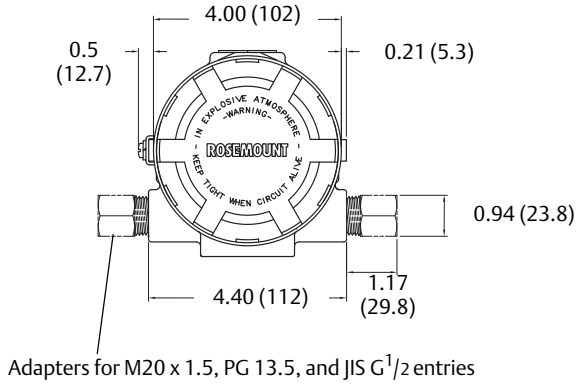

Dimensions are in inches (millimeters).

Optional transmitter mounting brackets

Option Code B4 bracket

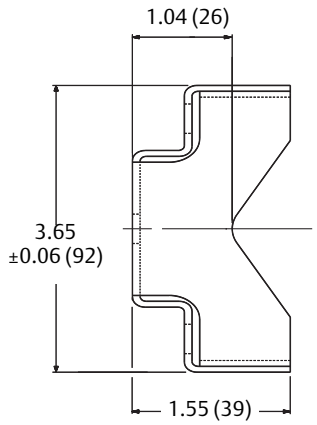

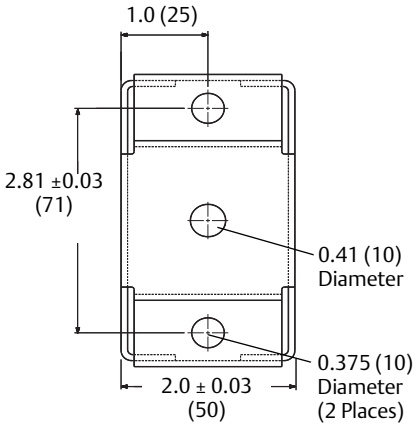

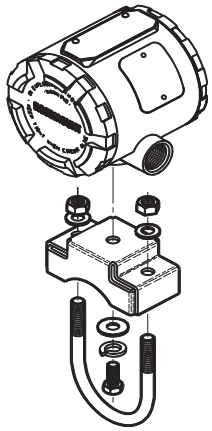

Option Code B5 bracket

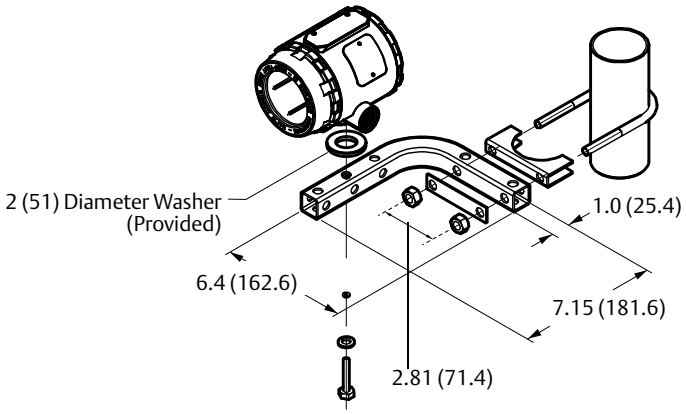

Dimensions are in inches (millimeters).

Figure 1. HART / 4–20 mA

3144P Single-Sensor connections diagram

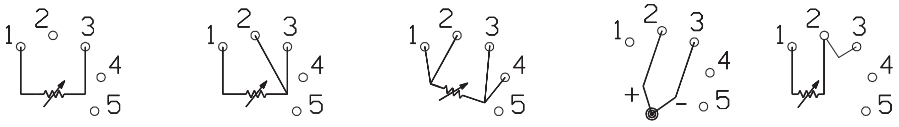

2-wire RTD and Ohms | 3-wire RTD and Ohms** | 4-wire RTD and Ohms | T/Cs and Millivolts | RTD with Compensation Loop*

3144P Dual-Sensor connections diagram

ΔT/Hot Backup/Dual Sensor with 2 RTDs | ΔT/Hot Backup/Dual Sensor with 2 Thermocouples | ΔT/Hot Backup/Dual Sensor with RTDs/ Thermocouples ** | ΔT/Hot Backup/Dual Sensor with RTDs/ Thermocouples ** | ΔT/Hot Backup/Dual Sensor with 2 RTDs with Compensation Loop **

* Transmitter must be configured for a 3-wire RTD in order to recognize an RTD with a compensation loop.

** Emerson Process Management provides 4-wire sensors for all single-element RTDs. Use these RTDs in 2-wire or 3-wire configurations by leaving the unneeded leads disconnected and insulated with electrical tape.

Figure 2. FOUNDATION Fieldbus

3144P Single-Sensor connections diagram

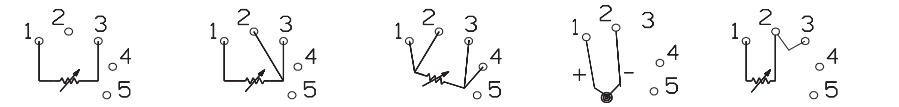

2-wire RTD and Ohms | 3-wire RTD and Ohms** | 4-wire RTD and Ohms | T/Cs and Millivolts | RTD with Compensation Loop*

3144P Dual-Sensor connections diagram

ΔT/Hot Backup/Du Sensor with 2 RTD | ΔT/Hot Backup/Dual Sensor with 2 Thermocouples | ΔT/Hot Backup/Dual Sensor with RTDs/ Thermocouples ** | ΔT/Hot Backup/Dual Sensor with RTDs/ Thermocouples ** | ΔT/Hot Backup/Dual Sensor with 2 RTDs with Compensation Loop **

* Transmitter must be configured for a 3-wire RTD in order to recognize an RTD with a compensation loop.

** Emerson Process Management provides 4-wire sensors for all single-element RTDs. Use these RTDs in 2-wire or 3-wire configurations by leaving the unneeded leads disconnected and insulated with electrical tape.

Standard configuration

Both standard and custom configuration settings may be changed. Unless specified, the transmitter will be shipped as follows:

Standard configuration	
4 mA value / Lower Range (HART / 4–20 mA) Measurement Point LO (FOUNDATION Fieldbus)	0 °C
20 mA value / Upper Range (HART / 4–20 mA) Measurement Point HI (FOUNDATION Fieldbus)	100 °C
Damping	5 seconds
Output	Linear with temperature
Failure Mode (HART / 4–20 mA)	High
Line Voltage Filter	60 Hz
Software Tag	See “Software tag” on page 9
Optional Integral Display	Units and mA / Sensor 1 units
Single-sensor option	
Sensor Type	4-wire, Pt 100 α = 0.00385 RTD
Primary Variable (HART / 4–20 mA) AI 1400 (FOUNDATION Fieldbus)	Sensor 1
Secondary Variable AI 1600 (FOUNDATION Fieldbus)	Terminal Temperature
Tertiary Variable	Not Used
Quaternary Variable	Not Used
Dual-sensor option	
Sensor Type	Two 3-wire, Pt 100 α = 0.00385 RTD
Primary Variable (HART / 4–20 mA) AI 1400 (FOUNDATION Fieldbus)	Sensor 1
Secondary Variable AI 1500 (FOUNDATION Fieldbus)	Sensor 2
Tertiary Variable AI 1600 (FOUNDATION Fieldbus)	Terminal Temperature
Quaternary Variable	Not Used

Custom configuration

The Rosemount 3144P transmitter can be ordered with custom configuration. The table below lists the requirements necessary to specify a custom configuration.

Option code	Requirements/specification
C1: Factory Data(1)	Date: day/month/year Descriptor: 16 alphanumeric character Message: 32 alphanumeric character Custom Alarm Levels can be specified for configuration at the factory.
C2: Transmitter-Sensor Matching	The 3144P transmitter is designed to accept Callendar-van Dusen constants from a calibrated RTD schedule and generate a custom curve to match any specific sensor curve. Specify a Series 68, 65, or 78 RTD sensor on the order with a special characterization curve (V or X8Q4 option). These constants will be programmed into the 3144P when this option is selected.
C4: Five Point Calibration	Will include five-point calibration at 0, 25, 50, 75, and 100% analog and digital output points. Use with option code Q4 to obtain a Calibration Certificate.
C7: Special Sensor	Used for non-standard sensor, adding a special sensor or expanding input. Customer must supply the non-standard sensor information. Additional special curve will be added to sensor curve input choices.
A1: NAMUR-Compliant, high alarm	Analog output levels compliant with NAMUR. Alarm is set to fail high.
CN: NAMUR-Compliant, low alarm	Analog output levels compliant with NAMUR. Alarm is set to fail low.
C8: Low Alarm	Analog output levels compliant with Rosemount standard. Alarm is set to fail low.
F5: 50 Hz Line Voltage Filter	Calibrated to 50 Hz line voltage filter.

(1) CDS required.

To custom configure the 3144P with the dual-sensor option transmitter for one of the applications described below, indicate the appropriate option code in the model number. If a sensor type is not specified, the transmitter will be configured for two 3-wire Pt 100 (α = 0.00385) RTDs if any of the following option codes are selected.

Option Code U1: Hot Backup	
Primary Usage	Primary usage sets the transmitter to automatically use sensor 2 as the primary input if sensor 1 fails. Switching from sensor 1 to sensor 2 is accomplished without any effect on the analog signal. A digital alert will be sent in the event of a failed sensor.
Primary Variable	1st good
Secondary Variable	Sensor 1
Tertiary Variable	Sensor 2
Quaternary Variable	Terminal Temperature

Option Code U2: Average Temperature with Hot Backup and Sensor Drift Alert – Warning Mode	
Primary Usage	Critical applications, such as safety interlocks and control loops. Outputs the average of two measurements and sends a digital alert if temperature difference exceeds the set maximum differential (Sensor Drift Alert – warning mode). If a sensor fails, an alert will be sent digitally and the primary variable will be reported as the remaining good sensor value.
Primary Variable	Sensor Average
Secondary Variable	Sensor 1
Tertiary Variable	Sensor 2
Quaternary Variable	Terminal Temperature

Option Code U3: Average temperature with Hot Backup and Sensor Drift Alert – Alarm Mode	
Primary Usage	Critical applications, such as safety interlocks and control loops. Outputs the average of two measurements and sets the analog output into alarm if temperature difference exceeds the set maximum differential (Sensor Drift Alert – alarm mode). If a sensor fails, an alert will be sent digitally and the primary variable will be reported as the remaining good sensor value.
Primary Variable	Sensor Average
Secondary Variable	Sensor 1
Tertiary Variable	Sensor 2
Quaternary Variable	Terminal Temperature

Option Code U4: Two Independent Sensors	
Primary Usage	Used in non-critical applications where the digital output is used to measure two separate process temperatures.
Primary Variable	Sensor 1
Secondary Variable	Sensor 2
Tertiary Variable	Terminal Temperature
Quaternary Variable	Not Used

Option Code U5: Differential Temperature	
Primary Usage	The differential temperature of two process temperatures is configured as the primary variable. If the temperature difference exceeds the maximum differential, the analog output will go into alarm. Primary Variable will be reported as a bad sensor value.
Primary Variable	Differential Temperature
Secondary Variable	Sensor 1
Tertiary Variable	Sensor 2
Quaternary Variable	Terminal Temperature

Option Code U6: Average Temperature	
Primary Usage	When average measurement of two different process temperatures is required. If a sensor fails, the analog output will go into alarm and the primary variable will report the measurement of the remaining good sensor.
Primary Variable	Sensor Average
Secondary Variable	Sensor 1
Tertiary Variable	Sensor 2
Quaternary Variable	Terminal Temperature

Emerson Process Management
Rosemount Inc.
8200 Market Boulevard
Chanhassen, MN 55317 USA
T (U.S.) 1-800-999-9307
T (International) (952) 906-8888
F (952) 906-8889
www.rosemount.com

Emerson Process Management
Blegistrasse 23
P.O. Box 1046
CH 6341 Baar
Switzerland
T +41 (0) 41 768 6111
F +41 (0) 41 768 6300
www.rosemount.com

Emerson Process Management
Asia Pacific Pte Ltd
1 Pandan Crescent
Signapore 128461
T +65 6777 8211
F +65 6777 0947
Service Support Hotline: +65 6770 8711
Email: Enquiries@AP.EmersonProcess.com
www.rosemount.com

Emerson Process Management
Latin America
1300 Concord Terrace, Suite 400
Sunrise Florida 33323 USA
T + 1 954 846 5030
www.rosemount.com

Standard Terms and Conditions of Sale can be found at www.rosemount.com\terms_of_sale
The Emerson logo is a trade mark and service mark of Emerson Electric Co.
Rosemount and the Rosemount logotype are registered trademarks of Rosemount Inc.
PlantWeb is a registered trademark of one of the Emerson Process Management group of companies.
HART and WirelessHART are registered trademarks of the HART Communication Foundation
Modbus is a trademark of Modicon, Inc.
All other marks are the property of their respective owners.
© 2014 Rosemount Inc. All rights reserved.

ROSEMOUNT

EMERSON.
Process Management

Quick Start Guide
00825-0100-4021, Rev JA
January 2014

Rosemount 3144P Temperature Transmitter with HART® Protocol



ROSEMOUNT

EMERSON.
Process Management

NOTICE

This installation guide provides basic guidelines for the Rosemount 3144P. It does not provide instructions for detailed configuration, diagnostics, maintenance, service, troubleshooting, Explosion-proof, Flameproof, or intrinsically safe (I.S.) installations. Refer to the 3144P reference manual (document number 00809-0100-4021) for more instruction. The manual and this QIG are also available electronically on www.emersonprocess.com.

WARNING

Explosions could result in death or serious injury:

Installation of this transmitter in an explosive environment must be in accordance with the appropriate local, national, and international standards, codes, and practices. Please review the approvals section of this manual for any restrictions associated with a safe installation,

Process leaks may cause harm or result in death.

- Install and tighten thermowells or sensors before applying pressure.
- Do not remove the thermowell while in operation.

Electrical shock can result in death or serious injury.

- Avoid contact with the leads and the terminals. High voltage that may be present on leads can cause electrical shock.

Conduit/Cable Entries

- The conduit/cable entries in the transmitter housing use a 1/2-14 NPT thread form.
- When installing in a Hazardous Location, use only appropriately listed or Ex certified plugs, glands, or adaptors in cable/conduit entries.

Contents

System readiness 3
Verify configuration 3
Set the switches 6
Mount the transmitter. 7
Wire and apply power 9
Perform a loop test 12
Safety Instrumented System (SIS) 13
Product Certifications 14

Step 1: System readiness

Confirm HART revision capability

- If using HART based control or asset management systems, please confirm the HART capability of those systems prior to transmitter installation. Not all systems are capable of communicating with HART Revision 7 protocol. This transmitter can be configured for either HART Revision 5 or 7.
- For instructions on how to change the HART revision of your transmitter, refer to page 4.

Software Release Date	Identify Device		Field Device Driver		Review Instructions
	NAMUR Software Revision	HART Software Revision	HART Universal Revision	Device Revision	Manual Document Number
Mar-2012	1.1.1	2	7	6	00809-0100-4021
			5	5	
Feb-2007	N/A	1	5	4	00809-0100-4021

Step 2: Verify configuration

The Rosemount 3144P communicates using a Field Communicator (communication requires a loop resistance between 250 and 1100 ohms) or AMS Device Manager. Do not operate when power is below 12 Vdc at the transmitter terminal. Refer to the 3144P Reference Manual (document number 00809-0100-4021) and Field Communicator Reference Manual (document number 00809-0100-4276) for more information.

Update the Field Communicator software

The latest Field Communicator Field Device Revision Dev v5 or v6, DD v1 or greater is required to fully communicate with the 3144P. The Device Descriptors are available with new communicators at www.emersonprocess.com or can be loaded into existing communicators at any Emerson Process Management Service Center.

The Device Descriptors are as follows:

Device in HART 5 mode: Device v5 DD v1

Device in HART 7 mode: Device v6 DD v1

Perform the following steps to determine if an upgrade is required. Refer to Figure 1.

1. Connect the sensor (see the wiring diagram located on the inside of the housing cover).
2. Connect the bench power supply to the power terminals (“+” or “–”).
3. Connect a Field Communicator to the loop across a loop resistor or at the power/signal terminals on the transmitter.
4. The following message will appear if the communicator has a previous version of the device descriptors (DDs):

NOTICE: Upgrade the communicator software to access new XMTR functions. Continue with old description?

Note:
If this notice does not appear, the latest DD is installed.

If the latest version is not available, the communicator will communicate properly, but when the transmitter is configured some new capabilities may not be visible.

To prevent this from happening, upgrade to the latest DD or answer NO to the question and default to the generic transmitter functionality.

Figure 1. Connecting a Communicator to a Bench Loop.

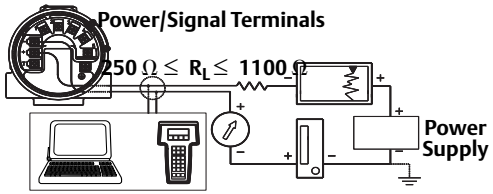

Switch HART revision mode

If the HART configuration tool is not capable of communicating with HART Revision 7, the 3144P will load a Generic Menu with limited capability. The following procedures will switch the HART revision mode from the Generic Menu:

1. Manual Setup>Device Information>Identification>Message.
   a. To change to HART Revision 5, Enter: “HART5” in the Message field
   b. To change to HART Revision 7, Enter: “HART7” in the Message field

Function	HART 5 Fast Keys	HART 7 Fast Keys
2-wire Offset Sensor 1	2, 2, 1, 5	2, 2, 1, 6
2-wire Offset Sensor 2	2, 2, 2, 5	2, 2, 2, 6
Alarm Values	2, 2, 5, 6	2, 2, 5, 6
Analog Calibration	3, 4, 5	3, 4, 5
Analog Output	2, 2, 5	2, 2, 5
Average Temperature Setup	2, 2, 3, 3	2, 2, 3, 3
Burst Mode		2, 2, 8, 4
Comm Status		1, 2
Configure additional messages		2, 2, 8, 4, 7
Configure *Hot Backup*	2, 2, 4, 1, 3	2, 2, 4, 1, 3
Date	2, 2, 7, 1, 2	2, 2, 7, 1, 3
Descriptor	2, 2, 7, 1, 3	2, 2, 7, 1, 4
Device Information	2, 2, 7, 1	2, 2, 7, 1
Differential Temperature Setup	2, 2, 3, 1	2, 2, 3, 1
Filter 50/60 Hz	2, 2, 7, 5, 1	2, 2, 7, 5, 1
Find Device		3, 4, 6, 2
First Good Temperature Setup	2, 2, 3, 2	2, 2, 3, 2
Hardware Revision	1, 8, 2, 3	1, 11, 2, 3
HART Lock		2, 2, 9, 2
Intermittent Sensor Detect	2, 2, 7, 5, 2	2, 2, 7, 5, 2
Lock Status		1, 11, 3, 7
Long Tag		2, 2, 7, 2
Loop Test	3, 5, 1	3, 5, 1
LRV (Lower Range Value)	2, 2, 5, 5, 3	2, 2, 5, 5, 3
Message	2, 2, 7, 1, 4	2, 2, 7, 1, 5
Open Sensor Holdoff	2, 2, 7, 4	2, 2, 7, 4
Percent Range	2, 2, 5, 4	2, 2, 5, 4
Sensor 1 Configuration	2, 2, 1	2, 2, 2
Sensor 1 Serial Number	2, 2, 1, 7	2, 2, 1, 8
Sensor 1 Setup	2, 2, 1	2, 2, 1

Function	HART 5 Fast Keys	HART 7 Fast Keys
Sensor 1 Status		2, 2, 1, 2
Sensor 1 Type	2, 2, 1, 2	2, 2, 1, 3
Sensor 1 Unit	2, 2, 1, 4	2, 2, 1, 5
Sensor 2 Configuration	2, 2, 2	2, 2, 2
Sensor 2 Serial Number	2, 2, 2, 7	2, 2, 2, 8
Sensor 2 Setup	2, 2, 2	2, 2, 2
Sensor 2 Status		2, 2, 2, 2
Sensor 2 Type	2, 2, 2, 2	2, 2, 2, 3
Sensor 2 Unit	2, 2, 2, 4	2, 2, 2, 5
Sensor Drift Alert	2, 2, 4, 2	2, 2, 4, 2
Simulate Device Variables		3, 5, 2
Software Revision	1, 8, 2, 4	1, 11, 2, 4
Tag	2, 2, 7, 1, 1	2, 2, 7, 1, 1
Terminal Temperature Units	2, 2, 7, 3	2, 2, 7, 3
URV (Upper Range Value)	2, 2, 5, 5, 2	2, 2, 5, 5, 2
Variable Mapping	2, 2, 8, 5	2, 2, 8, 5
Thermocouple Diagnostic	2, 1, 7, 1	2, 1, 7, 1
Min/Max Tracking	2, 1, 7, 2	2, 1, 7, 2

Step 3: Set the switches

Switch HART revision mode

The 3144P comes with hardware switches to configure alarms and lock the device. Use the following procedure to set the switches.

Without a LCD display

1. Set the loop to manual (if applicable) and disconnect the power.
2. Remove the electronics housing cover.
3. Set the alarm and security switches to the desired position. Reattach housing cover.
4. Apply power and set the loop to automatic control.

With a LCD display

1. Set the loop to manual (if applicable) and disconnect the power.
2. Remove the electronics housing cover.

3. Unscrew the LCD display screws and slide the meter straight off.
4. Set the alarm and security switches to the desired position.
5. Reattach the LCD display and electronics housing cover (consider LCD display orientation – rotate in 90 degree increments).
6. Apply power and set the loop to automatic control.

Step 4: Mount the transmitter

Mount the transmitter at a high point in the conduit run to prevent moisture from draining into the transmitter housing.

Typical field mount installation

1. Mount the thermowell to the process container wall. Install and tighten thermowells. Perform a leak check.
2. Attach any necessary unions, couplings, and extension fittings. Seal the fitting threads with an approved thread sealant, such as silicone or PTFE tape (if required).
3. Screw the sensor into the thermowell or directly into the process (depending on installation requirements).
4. Verify all sealing requirements.
5. Attach the transmitter to the thermowell/sensor assembly. Seal all threads with an approved thread sealant, such as silicone or PTFE tape (if required).
6. Install field wiring conduit into the open transmitter conduit entry (for remote mounting) and feed wires into the transmitter housing.
7. Pull the field wiring leads into the terminal side of the housing.
8. Attach the sensor leads to the transmitter sensor terminals (the wiring diagram is located inside the housing cover).
9. Attach and tighten both transmitter covers.

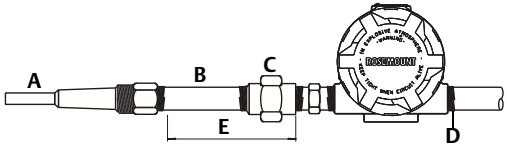

A = Thermowell	D = Conduit for Field Wiring (dc power)
B = Extension (Nipple)	E = Extension Fitting Length
C = Union or Coupling	

Step 4 continued...

Typical remote mount installation

1. Mount the thermowell to the process container wall. Install and tighten thermowells. Perform a leak check.
2. Attach a connection head to the thermowell.
3. Insert sensor into the thermowell and wire the sensor to the connection head (the wiring diagram is located inside the connection head).
4. Mount the transmitter to a 2-in. (50 mm) pipe or a panel using one of the optional mounting bracket (B4 bracket is shown below).
5. Attach cable glands to the shielded cable running from the connection head to the transmitter conduit entry.
6. Run the shielded cable from the opposite conduit entry on the transmitter back to the control room.
7. Insert shielded cable leads through the cable entries into the connection head / transmitter. Connect and tighten cable glands.
8. Connect the shielded cable leads to the connection head terminals (located inside the connection head) and to the sensor wiring terminals (located inside the transmitter housing).

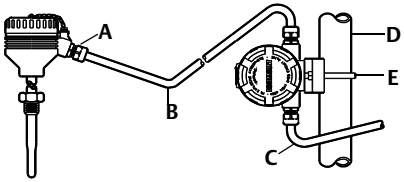

A = Cable Gland
B = Shielded Cable from Sensor to Transmitter
C = Shielded Cable from Transmitter to Control Room
D = 2-in. (50 mm) pipe
E = B4 Mounting Bracket

Step 5: Wire and apply power

Wire the transmitter

- Wiring diagrams are located inside the terminal block cover. See 3144P Single-Sensor below.

3144P Single-Sensor



2-wire RTD and Ohms



3-wire RTD and Ohms**



4-wire RTD and Ohms



T/Cs and Millivolts



RTD with Compensation

* *Transmitter must be configured for a 3-wire RTD in order to recognize an RTD with a compensation loop.*

** *Rosemount provides 4-wire sensors for all single-element RTDs. You can use these RTDs in 3-wire configurations by leaving the unneeded leads disconnected and insulated with electrical tape.*

3144P Dual-Sensor



ΔT/Hot Backup/Dual Sensor with 2 RTDs*



ΔT/Hot Backup/Dual Sensor with 2 Thermocouples*



ΔT/Hot Backup/Dual Sensor with RTDs/ Thermocouples*



ΔT/Hot Backup/Dual Sensor with RTDs/ Thermocouples*



ΔT/ Hot Backup/Dual Sensor with 2 RTDs with Compensation Loop*

* *Rosemount provides 4-wire sensors for all single-element RTDs. You can use these RTDs in 3-wire configurations by leaving the unneeded leads disconnected and insulated with electrical tape.*

Step 5 continued...

Power the transmitter

- An external power supply is required to operate the transmitter.

1. Remove the terminal block cover.
2. Connect the positive power lead to the "+" terminal. Connect the negative power lead to the "–" terminal.
3. Tighten the terminal screws.
4. Reattach and tighten the cover.
5. Apply power.

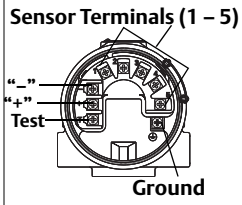

Load limitations

- The power required across the transmitter power terminals is 12 to 42.4 Vdc (the power terminals are rated to 42.4 Vdc). To prevent the possibility of damaging the transmitter, do not allow terminal voltage to drop below 12.0 Vdc when changing the configuration parameters.

Maximum Load = 40.8 X (Supply Voltage - 12.0)[1]

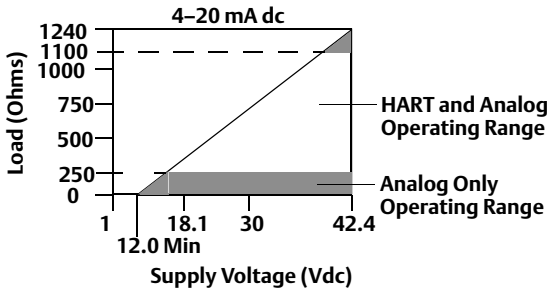

1.Without transient protection (optional)

Ground the transmitter

Ungrounded thermocouple, mV, and RTD/ohm Inputs

Each process installation has different requirements for grounding. Use the grounding options recommended by the facility for the specific sensor type or begin with grounding Option 1 (the most common).

Option 1 (recommended for ungrounded transmitter housing):

1. Connect signal wiring shield to the sensor wiring shield.
2. Ensure the two shields are tied together and electrically isolated from the transmitter housing.

3. Ground shield at the power supply end only.

- Ensure that the sensor shield is electrically isolated from the surrounding grounded fixtures.

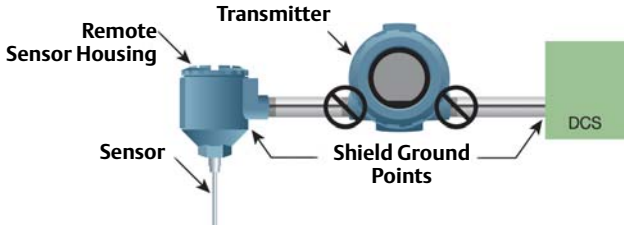

Option 2 (recommended for grounded transmitter housing):

1. Connect sensor wiring shield to the transmitter housing (only if the housing is grounded).
2. Ensure the sensor shield is electrically isolated from surrounding fixtures that may be grounded.
3. Ground signal wiring shield at the power supply end.

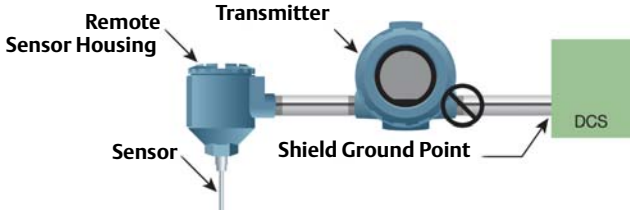

Option 3:

1. Ground sensor wiring shield at the sensor, if possible.
2. Ensure that the sensor wiring and signal wiring shields are electrically isolated from the transmitter housing and other fixtures that may be grounded.
3. Ground signal wiring shield at the power supply end.

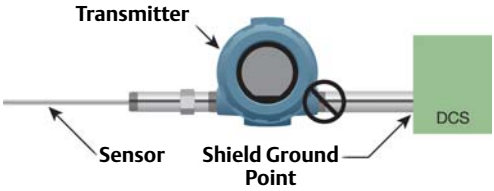

Grounded thermocouple inputs

1. Ground sensor wiring shield at the sensor.
2. Ensure that the sensor wiring and signal wiring shields are electrically isolated from the transmitter housing and other fixtures that may be grounded.

3. Ground signal wiring shield at the power supply end.

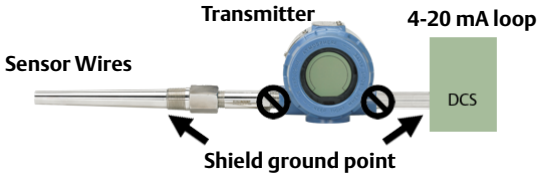

Step 6: Perform a loop test

The Loop Test verifies transmitter output, loop integrity, and operation of any recorders or similar devices installed in the loop.

Device Dashboard - Device Revision 5 and 6, DD v1

Initiate a loop test

1. Connect an external ampere meter in series with the transmitter loop (so the power to the transmitter goes through the meter at some point in the loop).
2. From the *Home* screen, select 3 Service Tools, 5 Simulate, 1 Perform Loop Test. The communicator displays the loop test menu.
3. Select a discreet milliampere level for the transmitter to output. At *Choose Analog Output* select 1 4mA, 2 20mA, or select 4 Other to manually input a value between 4 and 20 milliamperes. Select Enter to show the fixed output. Select OK.
4. In the test loop, check that the transmitter's actual mA output and the HART mA reading are the same value. If the readings do not match, either the transmitter requires an output trim or the current meter is malfunctioning.
5. After completing the test, the display returns to the loop test screen and allows the user to choose another output value. To end the Loop Test, Select 5 End and Enter.

Initiate simulation alarm

1. From the Home screen, select 3 Service Tools, 5 Simulate, 1 Perform Loop Test, 3 Simulate Alarm.
2. The transmitter will output the alarm current level based on the configured alarm parameter and switch settings.
3. Select 5 End to return the transmitter to normal conditions.

Safety Instrumented System (SIS)

For Safety Certified installations, please refer to the Rosemount 3144P reference manual (document number 00809-0100-4021). The manual is available electronically on www.rosemount.com or by contacting an Emerson Process Management representative.

Product Certifications

European Directive Information

A copy of the EC Declaration of Conformity can be found at the end of the Quick Start Guide. The most recent revision of the EC Declaration of Conformity can be found at www.rosemount.com.

Ordinary Location Certification from FM Approvals

As standard, the transmitter has been examined and tested to determine that the design meets the basic electrical, mechanical, and fire protection requirements by FM Approvals, a nationally recognized test laboratory (NRTL) as accredited by the Federal Occupational Safety and Health Administration (OSHA).

North America

E5 FM Explosionproof, Dust-Ignitionproof, and Nonincendive
Certificate: 3012752
Standards Used: FM Class 3600: 1998, FM Class 3611: 2004, FM Class 3615: 1989, FM Class 3810: 2005, NEMA-250: 1991, ANSI/ISA 60079-0: 2009, ANSI/ISA 60079-11: 2009
Markings: XP CL I, DIV 1, GP A, B, C, D; T5(-50 °C ≤ Ta ≤ +85 °C); DIP CL II/III, DIV 1, GP E, F, G; T5(-50 °C ≤ Ta ≤ +75 °C); T6(-50 °C ≤ Ta ≤ +60 °C); when installed per Rosemount drawing 03144-0320; NI CL I, DIV 2, GP A, B, C, D; T5(-60 °C ≤ Ta ≤ +75 °C); T6(-60 °C ≤ Ta ≤ +50 °C); when installed per Rosemount drawing 03144-0321, 03144-5075;

I5 FM Intrinsic Safety and Nonincendive
Certificate: 3012752
Standards Used: FM Class 3600: 1998, FM Class 3610: 2010, FM Class 3611: 2004, FM Class 3810: 2005, NEMA-250: 1991, ANSI/ISA 60079-0: 2009, ANSI/ISA 60079-11: 2009
Markings: IS CL I / II / III, DIV 1, GP A, B, C, D, E, F, G; T4(-60 °C ≤ Ta ≤ +60 °C); IS [Entity] CL I, Zone 0, AEx ia IIC T4(-60 °C ≤ Ta ≤ +60 °C); NI CL I, DIV 2, GP A, B, C, D; T5(-60 °C ≤ Ta ≤ +75 °C); T6(-60 °C ≤ Ta ≤ +50 °C); when installed per Rosemount drawing 03144-0321, 03144-5075;

I6 CSA Intrinsic Safety and Division 2
Certificate: 1242650
Standards Used: CAN/CSA C22.2 No. 0-M91 (R2001), CAN/CSA-C22.2 No. 94-M91, CSA Std C22.2 No. 142-M1987, CAN/CSA-C22.2 No. 157-92, CSA Std C22.2 No. 213-M1987;
Markings:Intrinsically Safe for Class I Groups A, B, C, D; Class II, Groups E, F, G; Class III; Intrinsically Safe for Class I Zone 0 Group IIC; T4(-50 °C ≤ Ta ≤ +60 °C); Type 4X;
Suitable for Class I, Div. 2, Groups A, B, C, D;
Suitable for Class I Zone 2 Group IIC; T6(-60 °C ≤ Ta ≤ +60 °C); T5(-60 °C ≤ Ta ≤ +85 °C); when installed per Rosemount drawing 03144-5076;

K6 CSA Explosionproof, Intrinsic Safety and Division 2
Certificate: 1242650
Standards Used: CAN/CSA C22.2 No. 0-M91 (R2001), CSA Std C22.2 No. 30-M1986; CAN/CSA-C22.2 No. 94-M91, CSA Std C22.2 No. 142-M1987, CAN/CSA-C22.2 No. 157-92, CSA Std C22.2 No. 213-M1987;

Markings: Explosionproof for Class I, Groups A, B, C, D; Class II, Groups E, F, G; Class III; Suitable for Class I Zone 1 Group IIC;
Intrinsically Safe for Class I Groups A, B, C, D; Class II, Groups E, F, G; Class III; Suitable for Class I Zone 0 Group IIC; T4(-50 °C ≤ Ta ≤ +60 °C); Type 4X;
Suitable for Class I, Div. 2, Groups A, B, C, D;
Suitable for Class I Zone 2 Group IIC; T6(-60 °C ≤ Ta ≤ +60 °C); T5(-60 °C ≤ Ta ≤ +85 °C); when installed per Rosemount drawing 03144-5076;

Europe

E1 ATEX Flameproof
Certificate: FM12ATEX0065X
Standards Used: EN 60079-0: 2012, EN 60079-1: 2007, EN 60529:1991 +A1:2000
Markings: ⟨Ex⟩ II 2 G Ex d IIC T6...T1 Gb, T6(-50 °C ≤ Ta ≤ +40 °C), T5...T1(-50 °C ≤ Ta ≤ +60 °C);
See Table 1 at the end of the Product Certifications section for Process Temperatures

Special Conditions for Safe Use (X):

1. See certificate for ambient temperature range.
2. The non-metallic label may store an electrostatic charge and become a source of ignition in Group III environments.
3. Guard the LCD cover against impact energies greater than 4 joules.
4. Consult the manufacturer if dimensional information on the flameproof joints is necessary.

I1 ATEX Intrinsic Safety
Certificate: BAS01ATEX1431X;
Standards Used: EN 60079-0: 2012; EN 60079-11:2012;
Markings: ⟨Ex⟩ II 1 G Ex ia IIC T5/T6 Ga; T6(-60 °C ≤ Ta ≤ +50 °C), T5(-60 °C ≤ Ta ≤ +75 °C);
See Table 2 at the end of the Product Certifications section for Entity Parameters

Special Conditions for Safe Use (X):

1. When fitted with the transient terminal options, the equipment is not capable of passing the 500V insulation test. This must be taken into account during installation.
2. The enclosure may be made from aluminum alloy with a protective polyurethane paint finish; however, care should be taken to protect it from impact or abrasion when located in Zone 0.

N1 ATEX Type n
Certificate: BAS01ATEX3432X
Standards: EN 60079-0:2012, EN 60079-15:2010
Markings: ⟨Ex⟩ II 3 G Ex nA IIC T5/T6 Gc; T6(-40 °C ≤ Ta ≤ +50 °C), T5(-40 °C ≤ Ta ≤ +75 °C);

Special Conditions for Safe Use (X):

1. When fitted with the transient terminal options, the equipment is not capable of withstanding the 500 V electrical strength test as defined in clause 6.5.1 of EN 60079-15: 2010. This must be taken into account during installation.

ND ATEX Dust

Certificate: FM12ATEX0065X

Standards Used: EN 60079-0: 2012, EN 60079-31: 2009, EN 60529:1991 +A1:2000

Markings: ⟨Ex⟩ II 2 D Ex tb IIIC T130 °C Db, (-40 °C ≤ Ta ≤ +70 °C); IP66

See Table 1 at the end of the Product Certifications section for Process Temperatures

Special Conditions for Safe Use (X):

1. See certificate for ambient temperature range.
2. The non-metallic label may store an electrostatic charge and become a source of ignition in Group III environments.
3. Guard the LCD cover against impact energies greater than 4 joules.
4. Consult the manufacturer if dimensional information on the flameproof joints is necessary.

International

E7 IECEx Flameproof

Certificate: IECEx FMG 12.0022X

Standards Used: IEC 60079-0:2011, IEC 60079-1:2007-04, IEC 60079-31:2008

Markings: Ex d IIC T6...T1 Gb, T6(-50 °C ≤ Ta ≤ +40 °C), T5...T1(-50 °C ≤ Ta ≤ +60 °C); Ex tb IIIC T130°C Db, (-40 °C ≤ Ta ≤ +70 °C); IP66;

See Table 1at the end of the Product Certifications section for Process Temperatures

Special Conditions for Safe Use (X):

1. See certificate for ambient temperature range.
2. The non-metallic label may store an electrostatic charge and become a source of ignition in Group III environments.
3. Guard the LCD cover against impact energies greater than 4 joules.
4. Consult the manufacturer if dimensional information on the flameproof joints is necessary.

I7 IECEx Intrinsic Safety

Certificate: IECEx BAS 07.0002X

Standards Used: IEC 60079-0: 2011; IEC 60079-11: 2011;

Markings: Ex ia IIC T5/T6 Ga; T6(-60 °C ≤ Ta ≤ +50 °C), T5(-60 °C ≤ Ta ≤ +75 °C);

See Table 2 at the end of the Product Certifications section for Entity Parameters

Special Conditions for Safe Use (X):

1. When fitted with the transient terminal options, the apparatus is not capable of withstanding the 500V electrical strength test as defined in Clause 6.3.13 of IEC 60079-11: 2011. This must be taken into account during installation.
2. The enclosure may be made from aluminum alloy with a protective polyurethane paint finish; however, care should be taken to protect it from impact or abrasion when located in Zone 0.

N7 IECEx Type n
Certificate: IECEx BAS 070003X
Standards Used: IEC 60079-0:2011, IEC 60079-15:2010
Markings: Ex nA IIC T5/T6 Gc; T6(-40 °C ≤ Ta ≤ +50 °C), T5(-40 °C ≤ Ta ≤ +75 °C);

Brazil

E2 INMETRO Flameproof
Certificate: CEPEL 04.0307X
Standards Used: ABNT NBR IEC 60079-0:2008, ABNT NBR IEC 60079-1:2009, ABNT NBR IEC 60079-26:2008, ABNT NBR IEC 60529:2009
Markings: Ex d IIC T* Gb; T6(-40 °C ≤ Ta ≤ +65 °C), T5(-40 °C ≤ Ta ≤ +80 °C)

Special Conditions for Safe Use (X):

1. The accessory of cable entries or conduit must be certified as flameproof and needs to be suitable for use conditions.
2. For ambient temperature above 60 °C, cable wiring must have minimum isolation for temperature 90 °C, to be in accordance to equipment operation temperature.
3. Where electrical entry is via conduit, the required sealing device must be assembled immediately close to enclosure.

I2 INMETRO Intrinsic Safety
Certificate: CEPEL 05.0723X
Standards Used: ABNT NBR IEC 60079-0:2008, ABNT NBR IEC 60079-11:2009, ABNT NBR IEC 60079-26:2008, ABNT NBR IEC 60529:2009
Markings: Ex ia IIC T* Ga; T6(-60 °C ≤ Ta ≤ +50 °C), T5(-60 °C ≤ Ta ≤ +75 °C), T4(-60 °C ≤ Ta ≤ +60 °C); IP66(Aluminum enclosures), IP66W (Stainless Steel enclosures)
See Table 2 at the end of the Product Certifications section for Entity Parameters

Special Conditions for Safe Use (X):

1. The apparatus enclosure may contain light metals. The apparatus must be installed in such a manner as to minimize the risk of impact or friction with other metal surfaces.
2. A transient protection device can be fitted as an option, in which the equipment will not pass the 500 V test.

China

E3 China Flameproof
Certificate: GYJ11.1650X
Standards Used: GB3836.1-2000, GB3836.2-2010
Markings: Ex d IIC T5/T6 Gb

Special Conditions for Safe Use (X):

1. Symbol "X" is used to denote specific conditions of use: For information on the dimensions of the flameproof joints the manufacturer shall be contacted. This shall be mentioned in the manual.
2. Relation between T code and ambient temperature range is:

T Code	Ambient Temperature
T6	-40 °C ≤ Ta ≤ +70 °C
T5	-40 °C ≤ Ta ≤ +80 °C

3. The earth connection facility in the enclosure should be connected reliably.
4. During installation, there should be no mixture harmful to flameproof housing.
5. During installation in hazardous location. Cable glands, conduits and blanking plugs, certified by state-appointed inspection bodies with Ex d IIC Gb degree, should be used.
6. During installation, use and maintenance in explosive gas atmospheres, observe the warning "Do not open when energized".
7. End users is not permitted to change any components insides, but to settle the problem in conjunction with manufacturer to avoid damage to the product.
8. When installation, use and maintenance of this product, observe following standards:
   GB3836.13-1997 "Electrical apparatus for explosive gas atmospheres Part 13: Repair and overhaul for apparatus used in explosive gas atmospheres"
   GB3836.15-2000 "Electrical apparatus for explosive gas atmospheres Part 15: Electrical installations in hazardous area (other than mines)"
   GB3836.16-2006 "Electrical apparatus for explosive gas atmospheres Part 16: Inspection and maintenance of electrical installation (other than mines)"
   GB50257-1996 "Code for construction and acceptance of electric device for explosion atmospheres and fire hazard electrical equipment installation engineering"

I3 China Intrinsic Safety
Certificate: GYJ11.1536X
Standards Used: GB3836.1-2000, GB3836.4-2010
Markings: Ex ia IIC T4/T5/T6

Special Conditions for Safe Use (X):

1. Symbol "X" is used to denote specific conditions of use:
   a. The enclosure may contain light metal, attention should be taken to avoid ignition hazard due to impact or friction when used in Zone 0.
   b. When fitted with the "Transient Terminal Option", this apparatus is not capable of withstanding the 500V r.m.s. insulation test required by Clause 6.3.12 of GB3836.4-2010.
2. Relation between T code and ambient temperature range is:

T Code	Ambient Temperature
T6	-60 °C ≤ Ta ≤ +50 °C
T5	-60 °C ≤ Ta ≤ +70 °C

3. Parameters:

Power/Loop terminals (+ and -)

Maximum Input Voltage: U_i (V)	Maximum Input Current: I_i (mA)	Maximum Input Power: P_i (W)	Maximum Internal Parameters:	
			C_i (nF)	L_i (μH)
30	300	1	5	0

Sensor terminal (1 to 5)

Maximum Input Voltage: U_o (V)	Maximum Input Current: I_o (mA)	Maximum Input Power: P_o (W)	Maximum Internal Parameters:	
			C_i (nF)	L_i (μH)
13.6	56	0.19	78	0

Load connected to sensor terminals (1 to 5)

Group	Maximum External Parameters	
	C_o (μF)	L_o (mH)
IIC	0.74	11.7
IIB	5.12	44
IIA	18.52	94

Temperature transmitters comply to the requirements for FISCO field devices specified in GB3836.19-2010. FISCO parameters are as follows:

Maximum Input Voltage: U_i (V)	Maximum Input Current: I_i (mA)	Maximum Input Power: P_i (W)	Maximum Internal Parameters:	
			C_i (nF)	L_i (μH)
17.5	380	5.32	2.1	0

4. The product should be used with Ex-certified associated apparatus to establish explosion protection system that can be used in explosive gas atmospheres. Wiring and terminals should comply with the instruction manual of the product and associated apparatus.
5. The cables between this product and associated apparatus should be shielded cables (the cables must have insulated shield). The shielded has to be grounded reliably in non-hazardous area.
6. End users are not permitted to change any components insides, but to settle the problem in conjunction with manufacturer to avoid damage to the product.
7. When installation, use and maintenance of this product, observe following standards:

GB3836.13-1997 “Electrical apparatus for explosive gas atmospheres Part 13: Repair and overhaul for apparatus used in explosive gas atmospheres”
GB3836.15-2000 “Electrical apparatus for explosive gas atmospheres Part 15: Electrical installations in hazardous area (other than mines)”
GB3836.6-2006 “Electrical apparatus for explosive gas atmospheres Part 16: Inspection and maintenance of electrical installation (other than mines)”
GB50257-1996 “Code for construction and acceptance of electric device for explosion atmospheres and fire hazard electrical equipment installation engineering”

Japan

E4 TIIS Flameproof
Certificate: TC16120, TC16121
Markings: Ex d IIB T6 (-20 °C ≤ Ta ≤ +55 °C)

Certificate: TC16127, TC16128, TC16129, TC16130
Markings: Ex d IIB T4 (-20 °C ≤ Ta ≤ +55 °C)

Combinations

K1 Combination of E1, I1, N1, and ND
K2 Combination of E2 and I2
K5 Combination of E5 and I5
K7 Combination of E7, I7, N7
KA Combination of K1 and K6
KB Combination of K5, I6, and K6

Tables

Table 1. Process Temperatures

Temperature Class	Ambient Temperature	Process Temperature w/o LCD Cover (°C)			
		No ext.	3 in.	6 in.	9 in.
T6	-50 °C to +40 °C	55	55	60	65
T5	-50 °C to +60 °C	70	70	70	75
T4	-50 °C to +60 °C	100	110	120	130
T3	-50 °C to +60 °C	170	190	200	200
T2	-50 °C to +60 °C	280	300	300	300
T1	-50 °C to +60 °C	440	450	450	450

Table 2. Entity Parameters

	Fieldbus/Profibus	HART 5
Voltage U_i (V)	30	30
Current I_i (mA)	300	300
Power P_i (W)	1	1.3
Capacitance C_i (nF)	5	2.1
Inductance L_i (mH)	0	0

ROSEMOUNT

EC Declaration of Conformity

No: RMD 1045 Rev. G

We,

Rosemount Inc.
8200 Market Boulevard
Chanhassen, MN 55317-9685
USA

declare under our sole responsibility that the product,

Model 3144P Temperature Transmitter

manufactured by,

Rosemount Inc.
8200 Market Boulevard
Chanhassen, MN 55317-9685
USA

to which this declaration relates, is in conformity with the provisions of the European Community Directives, including the latest amendments, as shown in the attached schedule.

Assumption of conformity is based on the application of the harmonized standards and, when applicable or required, a European Community notified body certification, as shown in the attached schedule.

(signature)

Vice President of Global Quality
(function name - printed)

Kelly Klein
(name - printed)

6 May 2013
(date of issue)

EMERSON.
Process Management

Page 1 of 3

Document Rev: 2013_A

ROSEMOUNT

EC Declaration of Conformity

No: RMD 1045 Rev. G

EMC Directive (2004/108/EC)

All Models

Harmonized Standards: EN61326-1:2006, EN61326-2-3: 2006

ATEX Directive (94/9/EC)

Model 3144P Temperature Transmitter (4-20mA/Hart Output)

BAS01ATEX1431X – Intrinsic Safety Certificate
Equipment Group II, Category 1 G (Ex ia IIC T6/T5 Ga)
Harmonized Standards Used:
EN60079-0:2012, EN60079-11:2012

BAS01ATEX3432X – Type n Certificate
Equipment Group II, Category 3 G (Ex nA IIC T6/T5 Gc)
Harmonized Standards Used:
EN60079-0:2012, EN60079-15:2010

Model 3144P Temperature Transmitter (Fieldbus Output)

Baseefa03ATEX0708X – Intrinsic Safety Certificate
Equipment Group II, Category 1 G (Ex ia IIC T4 Ga)
Harmonized Standards Used:
EN60079-0:2012, EN60079-11:2012

Baseefa03ATEX0709 – Type n Certificate
Equipment Group II, Category 3 G (Ex nA IIC T5 Gc)
Harmonized Standards Used:
EN60079-0:2012, EN60079-15:2010

EMERSON. Process Management

Page 2 of 3

Document Rev: 2013_A

ROSEMOUNT

EC Declaration of Conformity

No: RMD 1045 Rev. G

Model 3144P Temperature Transmitter (all Output Protocols)

FM12ATEX0065X – Dust Certificate
Equipment Group II, Category 2 D (Ex tb IIIC T130°C Db)
Harmonized Standards Used:
EN 60079-0:2012, EN 60079-31:2009

FM12ATEX0065X – Flameproof Certificate
Equipment Group II, Category 2 G (Ex d IIC T6…T1)
Harmonized Standards Used:
EN 60079-0:2012, EN 60079-1:2007

ATEX Notified Bodies for EC Type Examination Certificate

BASEEFA Limited [Notified Body Number: 1180]
Rockhead Business Park
Staden Lane
Buxton, Derbyshire SK17 9RZ
United Kingdom

FM Approvals Ltd. [Notified Body Number: 1725]
1 Windsor Dials
Windsor, Berkshire, SL4 1RS
United Kingdom

ATEX Notified Body for Quality Assurance

BASEEFA Limited [Notified Body Number: 1180]
Rockhead Business Park
Staden Lane
Buxton, Derbyshire SK17 9RZ
United Kingdom

EMERSON.
Process Management

Document Rev: 2013_A

Quick Start Guide
00825-0100-4021, Rev JA
January 2014

Rosemount Inc.
8200 Market Boulevard
Chanhassen, MN USA 55317
T (US) (800) 999-9307
T (Intnl) (952) 906-8888
F (952) 906-8889

Emerson Process Management Asia Pacific Private Limited
1 Pandan Crescent
Singapore 128461
T (65) 6777 8211
F (65) 6777 0947/65 6777 0743

Emerson Process Management GmbH & Co. OHG
Argelsrieder Feld 3
82234 Wessling Germany
T 49 (8153) 9390, F49 (8153) 939172

Beijing Rosemount Far East Instrument Co., Limited
No. 6 North Street, Hepingli,
Dong Cheng District
Beijing 100013, China
T (86) (10) 6428 2233
F (86) (10) 6422 8586

Emerson Process Management (India) Private Ltd.
Delphi Building, B Wing, 6th Floor
Hiranandani Gardens, Powai
Mumbai 400076, India
T (91) 22 6662-0566
F (91) 22 6662-0500

Emerson Process Management, Brazil
Av. Hollingsworth, 325 - Iporanga
Sorocaba, SP – 18087-000, Brazil
T (55) 15 3238-3788
F (55) 15 3228-3300

Emerson Process Management, Russia
29 Komsomolsky prospekt
Chelyabinsk, 454138
Russia
T (7) 351 798 8510
F (7) 351 741 8432

Emerson Process Management, Dubai
Emerson FZE
P.O. Box 17033,
Jebel Ali Free Zone - South 2
Dubai, U.A.E.
T (971) 4 8118100
F (971) 4 8865465

Emerson Process Management Latin America
1300 Concord Terrace, Suite 400
Sunrise Florida 33323 USA
Tel + 1 954 846 5030

© 2014 Rosemount Inc. All rights reserved. All marks property of owner.
The Emerson logo is a trade mark and service mark of Emerson Electric Co
Rosemount and the Rosemount logotype are registered trademarks of Rosemount Inc.

ROSEMOUNT

EMERSON.
Process Management

Product Data Sheet
00813-0100-4733, Rev NB
January 2011

Rosemount Manifolds

- *Factory assembled, leak-tested, and calibrated*
- *Full breadth of offering including integral, conventional, and inline designs*
- *Integral design enables “flangeless” valve integration*
- *2, 3, and 5 valve configurations*
- *Compact, lightweight design*
- *Easy in-process calibration*
- *Direct-mount capability*



Contents

Rosemount Manifolds Selection Guide . . . . . page 2
Valve Configuration . . . . . page 3
Ordering Information . . . . . page 5
Specifications . . . . . page 11
Dimensional Drawings. . . . . page 17

Rosemount Manifolds Selection Guide

ROSEMOUNT 304 CONVENTIONAL MANIFOLD

See “Options” on page 27.

- Attaches to transmitter flange
- 2, 3, and 5-valve configurations
- Traditional (Flange x Flange, Flange x NPT) & Wafer styles
- Factory assembled, seal-tested, and calibrated

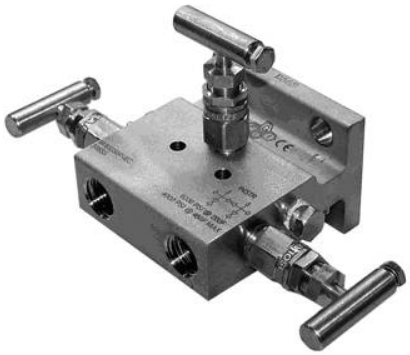

Rosemount 304 Conventional Manifold-Traditional Style



Rosemount 304 Conventional Manifold-Wafer Style

ROSEMOUNT 305 INTEGRAL MANIFOLD

See “Options” on page 27.

- Assembles directly to transmitter, eliminating need for flange
- 2, 3, and 5-valve configuration
- Available in Coplanar™ and traditional styles
- Compact, lightweight assembly
- Factory assembled, seal-tested, and calibrated
- 50% fewer leak points than conventional transmitter / flange / manifold interface



Rosemount 305 Integral Manifold Coplanar Style

ROSEMOUNT 306 INLINE MANIFOLD

See “Options” on page 27.

- Assembled directly to inline pressure transmitters
- Block-and-Bleed and 2-valve configurations
- Male or Female threaded NPT process connection



Rosemount 306 Inline Manifold

Valve Configuration

BLOCK-AND-BLEED

The block-and-bleed configuration is available on the Rosemount 306 Manifold for use with inline gage and absolute pressure transmitters. A single block valve provides instrument isolation and a plug provides drain/vent capabilities.

306 Manifold

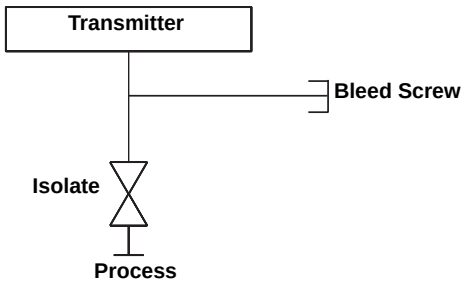

TWO-VALVE

The two-valve configuration is available on Rosemount 304, 305, and 306 Manifolds for use with absolute and gage pressure transmitters. A block valve provides instrument isolation and a drain/vent valve allows venting, draining, or calibration.

304 Manifold

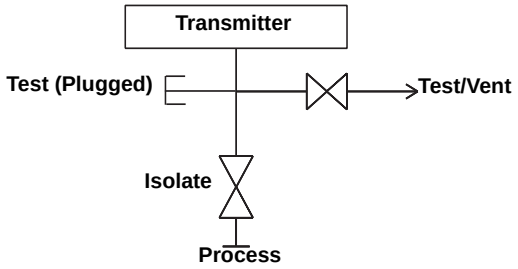

305 & 306 Manifolds

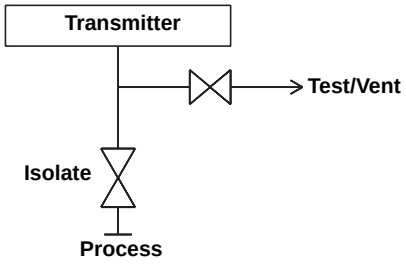

THREE-VALVE

The three-valve configuration is available on Rosemount 304 and 305 Manifolds for use with differential pressure and multivariable transmitters. Two block valves provide instrument isolation, and one equalize valve is positioned between the high and low transmitter process connections.

304 (Traditional) Manifold

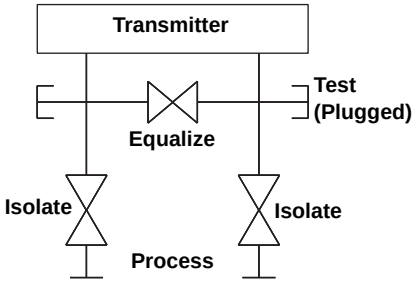

304 (Wafer) Manifold

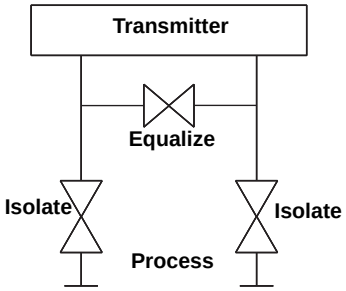

305 Manifold

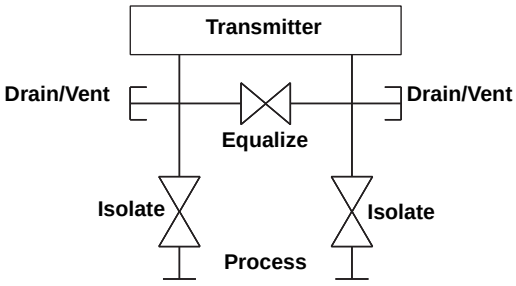

NOTE
Test/Vents receive plastic caps to protect threaded connections unless otherwise noted.

NOTE
Test (Plugged) connections receive ¼-in. NPT plugs unless otherwise noted.

FIVE-VALVE

The five-valve configuration is available on Rosemount 304 and 305 Manifolds for use with differential pressure and multivariable transmitters. Two block valves provide instrument isolation and one equalize valve is positioned between the high and low transmitter process connections. In addition, two drain/vent valves allow for controlled venting, 100% capture of vented or drained process, and simplified in-process calibration capability.

304 (Wafer) & 305 Manifolds

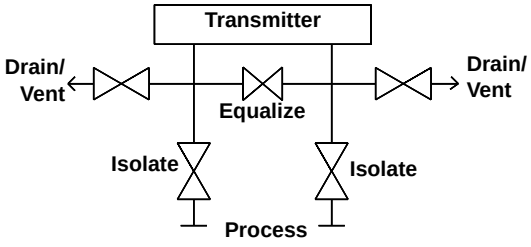

FIVE-VALVE NATURAL GAS

The five-valve natural gas configuration is available on the Rosemount 304 and 305 Manifolds for use with differential pressure and multivariable transmitters. Two block valves provide instrument isolation and a single drain/vent valve allows for controlled venting, 100% capture of vented or drained process, and simplified in-process calibration capability. In addition, two equalize valves provide extra protection from leaking to ensure DP signal integrity.

304 (Traditional) & 305 Manifolds

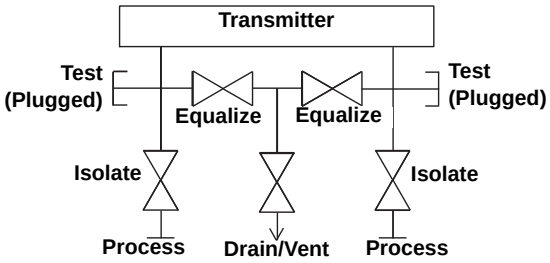

NOTE
Test/Vents receive plastic caps to protect threaded connections unless otherwise noted.

NOTE
Test (Plugged) connections receive ¼-in. NPT plugs unless otherwise noted.

Ordering Information

Rosemount Manifolds can be ordered as a stand-alone product or as an integrated assembly that is attached to a transmitter.

Stand-Alone Manifold:

1. Reference the “Rosemount Manifolds Selection Guide” (see page 2) for assistance on choosing the type of manifold needed.
2. Specify a completed model number by referencing the applicable ordering table for the selected manifold type:

   a. Rosemount 304 Conventional Manifold, see page 6.

   b. Rosemount 305 Integral Manifold, see page 8.

   c. Rosemount 306 Inline Manifold, see page 10.

Transmitter / Manifold Assembly:

1. Specify a completed Rosemount transmitter model number by referencing the applicable product data sheet.
2. Specify a completed manifold model number by referencing the applicable ordering table for the selected manifold type:

   a. Rosemount 304 Conventional Manifold, see page 6.

   b. Rosemount 305 Integral Manifold, see page 8.

   c. Rosemount 306 Inline Manifold, see page 10.
3. Verify the transmitter model number contains the correct “Process Connection” code or “Manifold Option” code for the desired transmitter manifold assembly (see Table 1).

Table 1. Ordering Codes for a Transmitter / Manifold Assembly

Transmitter	Manifold	Process Connection Code	“Manifold” Option Code
3051S	304	A12	–
	305	A11	–
	306	A11	–
3051/2051/3095	304	–	S6
	305	–	S5
	306	–	S5
1151	304	S6	–
	305	–	–
	306	–	–
2088	304	–	–
	305	–	–
	306	–	S5

Rosemount 304 Conventional Manifolds

Table 2. Rosemount 304 Conventional Manifold Ordering Information

★ The Standard offering represents the most common options. The starred options (★) should be selected for best delivery.
The Expanded offering is subject to additional delivery lead time.

Model	Product Description				
0304	Conventional Manifold				
Manufacturer					
Standard					**Standard**
R	Rosemount Inc.				★
Manifold Style					
Standard					**Standard**
T	Traditional (Flange x Flange or Flange x NPT)				★
Expanded					
W(1)	Wafer				
Manifold Type					
Standard					**Standard**
2(2)	2-valve				★
3	3-valve				★
5(3)	5-valve				★
6(2)	5-valve Natural Gas Metering Pattern				★
Expanded					
7(2)(4)	2-valve (per ASME B31.1 [ANSI] Power and Piping Code)				
8(2)(4)	3-valve (per ASME B31.1 [ANSI] Power and Piping Code)				
	Body	**Bonnet**	**Stem**	**Tip**	
Standard					**Standard**
2	316 SST	316 SST	316 SST	316 SST	★
5	CS	316 SST	316 SST	316 SST	★
Process Connection Style					
Standard					**Standard**
B	1/2-14 NPT				★
F(2)	Flanged				★
Packing Material					
Standard					**Standard**
1	PTFE				★
Expanded					
2(1)	Graphite-based				
Bolts					
Standard					**Standard**
1	For assembly to 2051/3051 Traditional Flange				★
2	For assembly to 2051/3051/3095 DIN Compliant Traditional Flange				★
3	For assembly to 2051/3051/3095 Coplanar Flange				★
Expanded					
4	For assembly to 1151 (Ranges 3-5)				

Options

Mounting Brackets		
Standard		**Standard**
VC(2)	Manifold Heavy Duty Mounting Bracket, CS for Traditional Style	★
VS(2)	Manifold Heavy Duty Mounting Bracket, SST for Traditional Style	★
B4(3)	Manifold SST Mounting Bracket for 2-in. pipe mount with series 300 SST bolts for wafer style	★
Adapters		
Standard		**Standard**
DF(5)	1/2-14 NPT Female Flange Adapter	★
DT(5)	1/2-in. ferrule flange adapter	★
DQ(5)	12 mm ferrule flange adapter	★

Table 2. Rosemount 304 Conventional Manifold Ordering Information

★ The Standard offering represents the most common options. The starred options (★) should be selected for best delivery.
The Expanded offering is subject to additional delivery lead time.

Bolt Material		
Standard		**Standard**
L4[6]	Austenitic 316 SST Bolts	★
L5	ASTM A 193, Grade B7M Bolts	★
L8	ASTM A 193, Class 2, Grade B8M Bolts	★
Material Recommendations for NACE		
Standard		**Standard**
SG[1][7]	Sour Gas (Meets NACE MR 0175 / ISO 15156, MR 0103)	★
Cleanings		
Expanded		
P2[8]	Cleaning for special service	
Heater Block Kits		
Standard		**Standard**
SB	Steam block kit, ¼-in. NPT connection	★
Typical Model Number:_ 0304_R_T_3_2_B_1_1_VS		

(1) Only allowed with Material of Construction code 2.

(2) Not available with Wafer Manifold Style code W.

(3) Not available with Traditional Manifold Style code T.

(4) Only available with 316 SST materials of construction code 2 and graphite based packing code 2.

(5) Only allowed with both Manifold Style code T and Process Connection code F. Not allowed with Graphite-based Packing Code 2.

(6) Not available with Manifold Type codes 7, 8.

(7) Materials of construction comply with recommendations per NACE MR 0175 / ISO 1516 for sour oil field production environments. Environmental limits apply to certain materials. Consult latest standard for details. Selected materials also conform to NACE MR 0103 for sour refining environments.

(8) Not available with Graphite-Based Packing Material code 2.

Rosemount 305 Integral Manifolds

Table 3. Rosemount 305 Integral Manifold Ordering Information

★ The Standard offering represents the most common options. The starred options (★) should be selected for best delivery.
The Expanded offering is subject to additional delivery lead time.

Model	Product Description			
0305	Integral Manifold			
Manufacturer				
Standard				**Standard**
R	Rosemount			★
Manifold Style				
Standard				**Standard**
C	Coplanar			★
T	Traditional			★
M	Traditional (Rosemount 3095-compatible; DIN-compliant flange)			★
Manifold Type				
Standard				**Standard**
2	2-valve			★
3	3-valve			★
5(1)	5-valve			★
6(2)	5-valve Natural Gas Metering Pattern			★
Expanded				
7(2)(3)	2-valve (per ASME B31.1 [ANSI] Power and Piping Code)			
8(2)(3)	3-valve (per ASME B31.1 [ANSI] Power and Piping Code)			
9(2)(3)	5-valve (per ASME B31.1 [ANSI] Power and Piping Code)			
	Body	**Bonnet**	**Stem and Tip / Ball**	
Standard				**Standard**
2	316 SST	316 SST	316 SST	★
Expanded				
3(4)	Alloy C-276	Alloy C-276	Alloy C-276	
4	Alloy 400	Alloy 400	Alloy 400 / K-500	
Process Connection Style				
Standard				**Standard**
A(5)	1/4–18 NPT female			★
B(6)	1/2–14 NPT female			★
Packing Material				
Standard				**Standard**
1	PTFE			★
Expanded				
2(7)	Graphite-based			
Valve Seat				
Standard				**Standard**
1	Integral			★
5	Soft delrin (only available with natural gas metering pattern)			★

Options

Mounting Brackets		
Standard		**Standard**
B1	Bracket for 2-in. pipe mounting, CS bolts	★
B3(8)	Flat bracket for 2-in. pipe mounting, CS bolts	★
B4	SST Mounting Bracket for 2-in. pipe mounting, 300 SST bolts	★
B7	B1 bracket with series 300 SST bolts	★
B9(8)	B3 bracket with series 300 SST bolts	★
BA	SST B1 bracket with series 300 SST bolts	★
BC(8)	SST B3 bracket with series 300 SST bolts	★

Table 3. Rosemount 305 Integral Manifold Ordering Information

★ The Standard offering represents the most common options. The starred options (★) should be selected for best delivery.
The Expanded offering is subject to additional delivery lead time.

Bolt Materials		
Standard		**Standard**
L4[9]	Austenitic 316 SST bolts	★
L5	ASTM-A-193-B7M bolts	★
L8	ASTM-A-193, Class 2, Grade B8M bolts	★
Cleanings		
Standard		**Standard**
P2[10]	Cleaning for special services	★
Material Recommendations for NACE		
Standard		**Standard**
SG[4][11]	Sour Gas (Meets NACE MR 0175 / ISO 15156, MR 0103)	★
Adapters		
Standard		**Standard**
DF[12]	1/2-14 NPT female flange adapter	★
Expanded		
DQ[12]	12 mm ferrule flange adapter	
Process Flange Bolting Connection		
Standard		**Standard**
HK[13]	10 mm (M10) process flange bolting connection	★
HL[13]	12 mm (M12) process flange bolting connection	★
Typical Coplanar Integral Manifold Model Number: 305RC32B11B4		
Typical Transmitter Model Number: 3051CD2A02A1AS5		

(1) Not available with traditional manifold style T.

(2) Only available with Coplanar manifold style code C.

(3) Only available with 316 SST materials of construction code 2 and graphite based backing code 2.

(4) Materials of Construction comply with recommendations per NACE MR 0175/ISO 15156 for sour oil field production environments. Environmental limits apply to certain materials. Consult latest standard for details. Selected materials also conform to NACE MR0103 for sour refining environments.

(5) Only available with traditional manifold style codes T and M.

(6) Not available with traditional manifold style code M.

(7) Includes graphite tape on drain/vent valves and plugs.

(8) Not compatible with the Rosemount 3095 transmitter.

(9) Not available with ASME B31.1 manifold type codes 7, 8, and 9.

(10) Not available with Graphite-Based Packing Material code 2.

(11) Only available with 316 SST Materials of Construction Code 2: 316 SST body and bonnets; Alloy C-276 stems, tip/balls, and drain/vents.

(12) Only allowed with Manifold Style code T. Not allowed with Graphite-Based Packing code 2.

(13) Only available with traditional manifold style code M.

Rosemount 306 Inline Manifolds

Table 4. Rosemount 306 Inline Pressure Manifold Ordering Information

★ The Standard offering represents the most common options. The starred options (★) should be selected for best delivery.
The Expanded offering is subject to additional delivery lead time.

Model	Product Description			
0306	Pressure Manifold			
Manufacturer				
Standard				**Standard**
R	Rosemount Inc.			★
Manifold Style				
Standard				**Standard**
T	Threaded			★
Manifold Type				
Standard				**Standard**
1	Block and bleed			★
2	2-valve			★
Expanded				
3(1)	2-valve (per ASME B31.1 Power Piping Code)			
	Body	**Bonnet**	**Stem and Tip / Ball**	
Standard				**Standard**
2	316 SST	316 SST	316 SST	★
Expanded				
3(2)(3)	Alloy C-276	Alloy C-276	Alloy C-276	
Process Connection				
Standard				**Standard**
AA	1/2–14 male NPT			★
BA(2)	1/2–14 female NPT			★
Packing Material				
Standard				**Standard**
1	PTFE			★
Expanded				
2(4)	Graphite-based			
Valve Seat				
Standard				**Standard**
1	Integral			★

Options

Cleanings		
Expanded		
P2(5)	Cleaning for special services	
Material Recommendations for NACE		
Standard		**Standard**
SG(3)(6)	Sour Gas (Meets NACE MR 0175 / ISO 15156, MR 0103)	★
Typical Integral Manifold Model Number: 3 0 6 R T 2 2 B A 1 1		
Typical Transmitter Model Number: 3051TG3A2B21AS5B4		

(1) Only available with 316 SST materials of construction and graphite-based packing.

(2) Not available with block-and-bleed manifold type

(3) Materials of Construction comply with recommendations per NACE MR0175/ISO 15156 for sour oil field production environments. Environmental limits apply to certain materials. Consult latest standard for details. Selected materials also conform to NACE MR0103 for sour refining environments.

(4) Includes graphite tape on plugs.

(5) Not available with Graphite-Based Packing Material code 2.

(6) Only available with 316 SST material of construction code 2. Manifolds with SG option are built with 316 SST body and bonnets; Alloy C-276 stems, tips/balls.

Specifications

Pressure and Temperature Ratings

Figure 1. 304 Conventional Manifolds - Pressure vs. Temperature

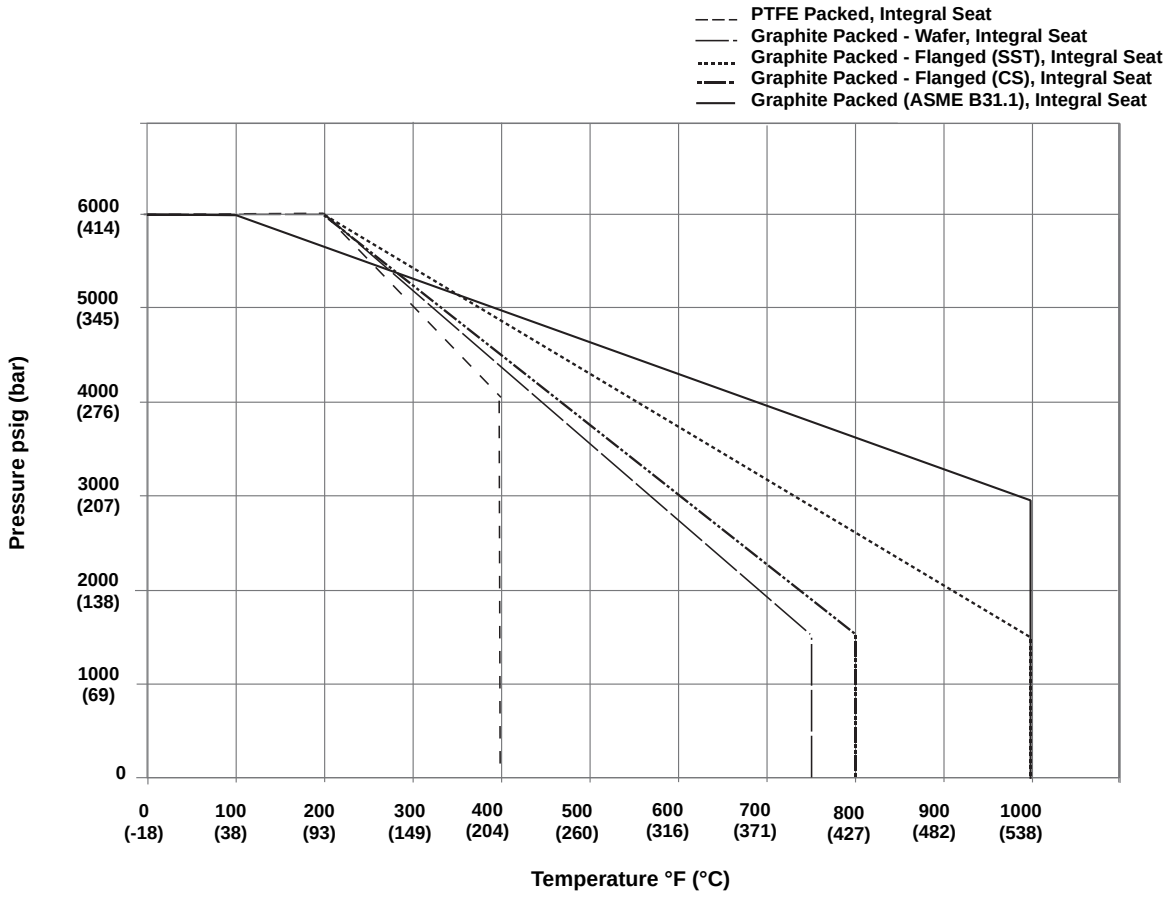

Table 5. 304 Conventional Manifolds - Pressure and Temperature Ratings

Packing	Seat	Pressure and Temperature Ratings
PTFE	Integral	6000 psi @ 200 °F (414 bar @ 93 °C) 4000 psi @ 400 °F (276 bar @ 204 °C)
Graphite - Wafer	Integral	6000 psi @ 200 °F (414 bar @ 93 °C) 1500 psi @ 750 °F (103 bar @ 399 °C)
Graphite - Flanged (SST)	Integral	6000 psi @ 200 °F (414 bar @ 93 °C) 1500 psi @ 1000 °F (103 bar @ 538 °C)
Graphite - Flanged (CS)	Integral	6000 psi @ 200 °F (414 bar @ 93 °C) 1500 psi @ 800 °F (103 bar @ 427 °C)
Graphite (ASME B31.1)	Integral	6000 psi @ 100 °F (414 bar @ 38 °C) 2915 psi @ 1000 °F (201 bar @ 538 °C)

Figure 2. 305 Integral Manifolds - Pressure vs. Temperature

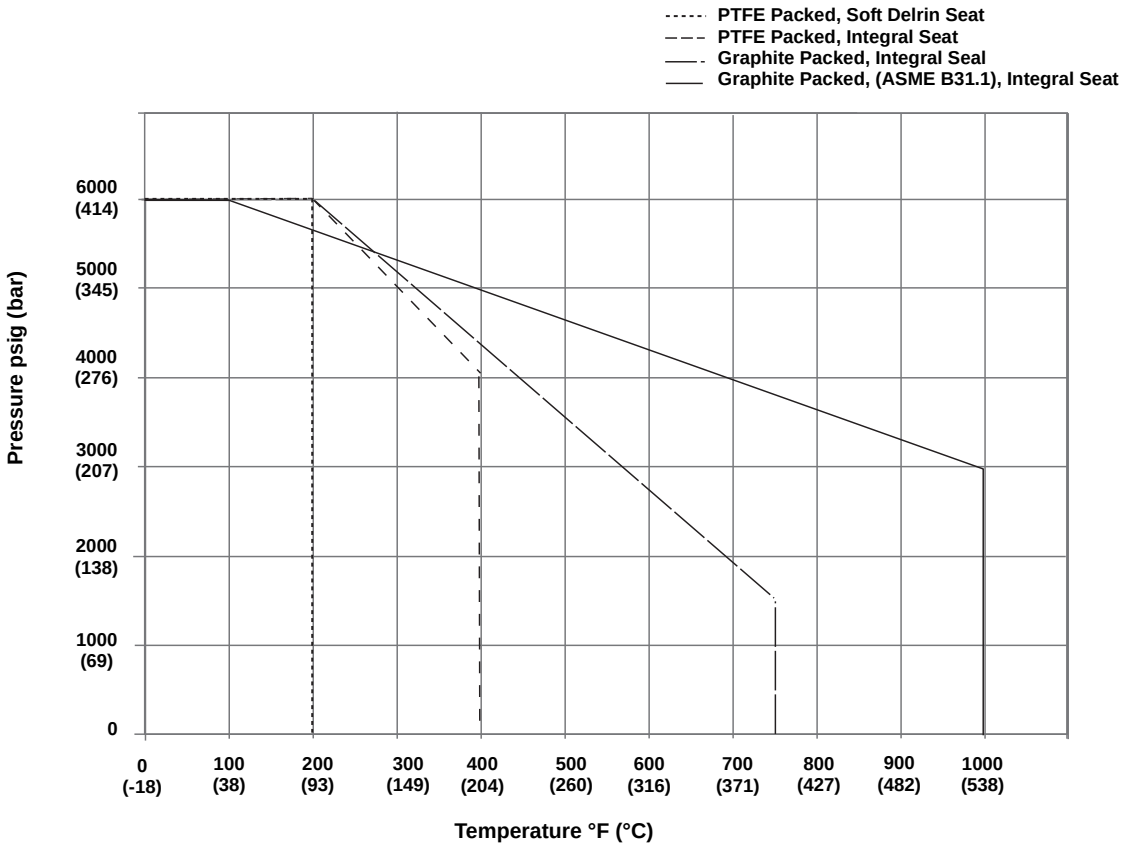

Table 6. 305 Integral Manifolds - Pressure and Temperature Ratings[(1)]

Packing[(1)]	Seat	Pressure and Temperature Ratings
PTFE	Integral	6092 psi @ 200 °F (420 bar @ 93 °C) 4000 psi @ 400 °F (276 bar @ 204 °C)
PTFE	Soft Delrin	6092 psi @ 200 °F (420 bar @ 38 °C)
Graphite	Integral	6092 psi @ 200 °F (420 bar @ 93 °C) 1500 psi @ 750 °F (103 bar @ 399 °C)
Graphite (ASME B31.1)	Integral	6092 psi @ 100 °F (420 bar @ 38 °C) 2915 psi @ 1000 °F (201 bar @ 538 °C)

(1) Except option HK:
PTFE, Integral seat: 2324 psi @ 200 °F (160 bar @ 93 °C), 1680 psi @ 400 °F (116 bar @ 204 °C)
Graphite, Integral seat: 2324 psi @ 200 °F (160 bar @ 93 °C), 1125 psi @ 750 °F (78 bar @ 399 °C)

Figure 3. 306 Integral Manifolds - Pressure vs. Temperature

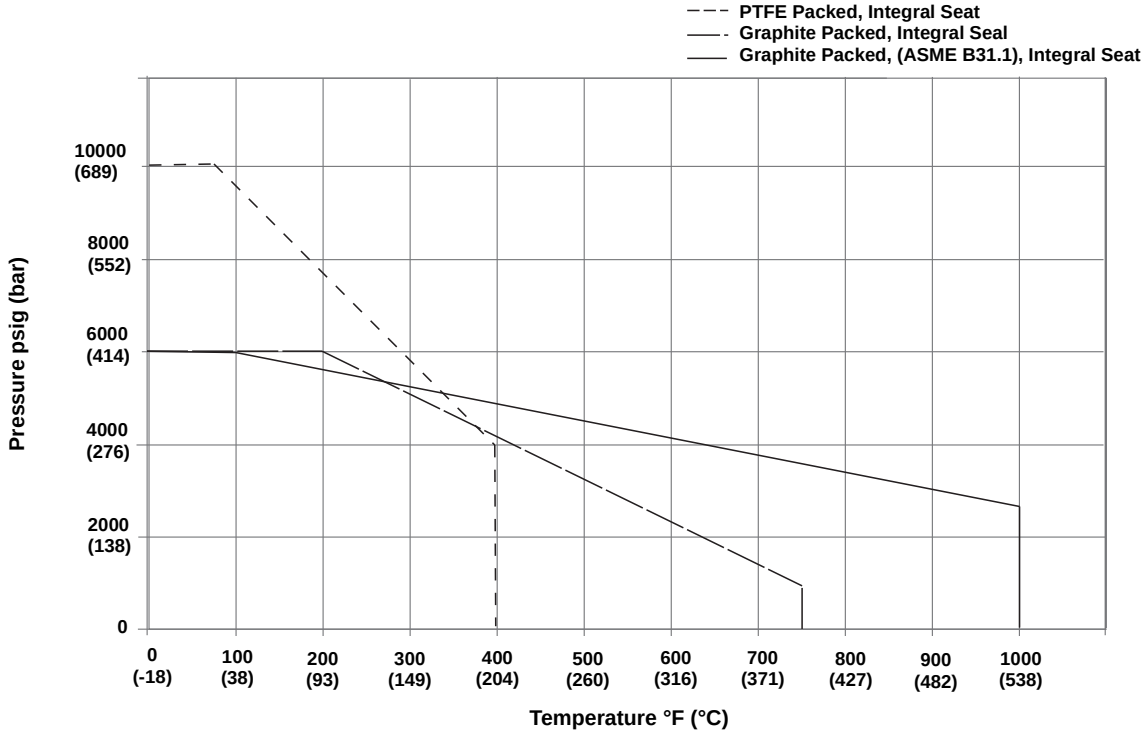

Table 7. 306 Integral Manifolds - Pressure and Temperature Ratings

Packing	Seat	Pressure and Temperature Ratings
PTFE	Integral	10000 psi @ 85 °F (689 bar @ 29 °C) 4000 psi @ 400 °F (276 bar @ 204 °C)
Graphite	Integral	6000 psi @ 200 °F (414 bar @ 93 °C) 1500 psi @ 750 °F (103 bar @ 399 °C)
Graphite (ASME B31.1)	Integral	6000 psi @ 100 °F (414 bar @ 38 °C) 2915 psi @ 1000 °F (201 bar @ 538 °C)

Process Connections

Table 8. Process Connections

Model and Style	Connection
304 Flange by Pipe Flange by Flange Wafer	 1/2 - 14 Female NPT 2 1/8-in. (54 mm) center-to-center connection (Process Adapters required) 1/2 - 14 Female NPT Process Adapters 1/2 - 14 Female NPT Flange Adapter 1/2-in. Ferrule Flange Adapter 12-mm Ferrule Flange Adapter
305 Coplanar Traditional	 1/2 - 14 Female NPT 1/4 - 18 Female NPT (Process Adapters optional) Optional Process Adapters 1/2 - 14 Female NPT Flange Adapter 12 mm Ferrule Flange Adapter
306 Block-and-Bleed 2-Valve	 1/2 - 14 Male NPT 1/2 - 14 NPT (Male or Female)

Instrument Connections

Table 9. Manifold - Transmitter Interface

Model	Connection
304	Mounted to traditional transmitter flange, 2 1/8-in. (54 mm) center-to-center connection per IEC 61518, Type B shut-off device (without SPIGOT)
305	Mounted directly to Coplanar sensor module of transmitter, 1.3-in. (287 mm) center-to-center process isolators
306	1/2 - 14 Male NPT

Test / Vent Connections

1/4-18 Female NPT

Manifold Bolts

Standard material is plated carbon steel per ASTM A449, Type 1

Alternative bolt materials offered through Option Codes

- L4 Austenitic 316 Stainless Steel Bolts
- L5 ASTM-A-193, Grade B7M Bolts
- L8 ASTM-A-193, Class 2, Grade B8M Bolts

O-Rings

Figure 4. 304 Manifold O-Rings

Manifold-to-Flange O-Rings
Same material as specified by manifold "Packing Material" selection:

- **"1" = PTFE**
- **"2" = Graphite**

Flange Adapter O-Rings
Glass-filled PTFE

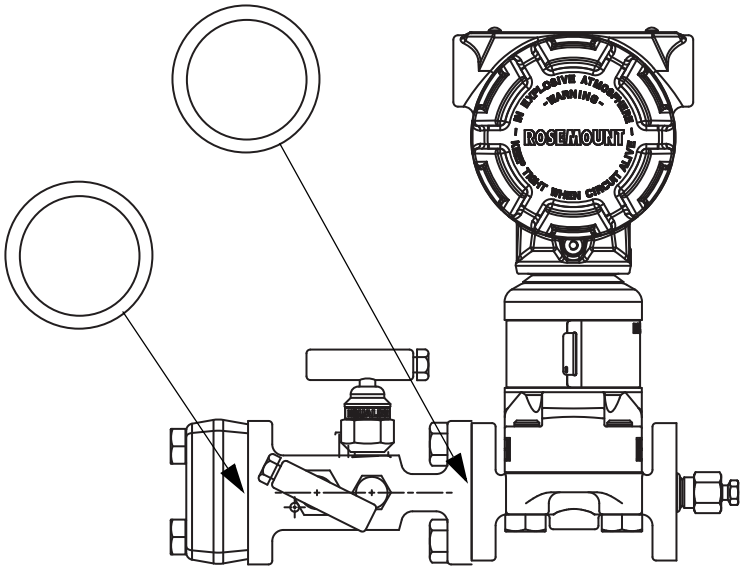

Figure 5. 305 Manifold O-Rings

Sensor Module-to-Manifold O-Rings
Specified in the transmitter model number

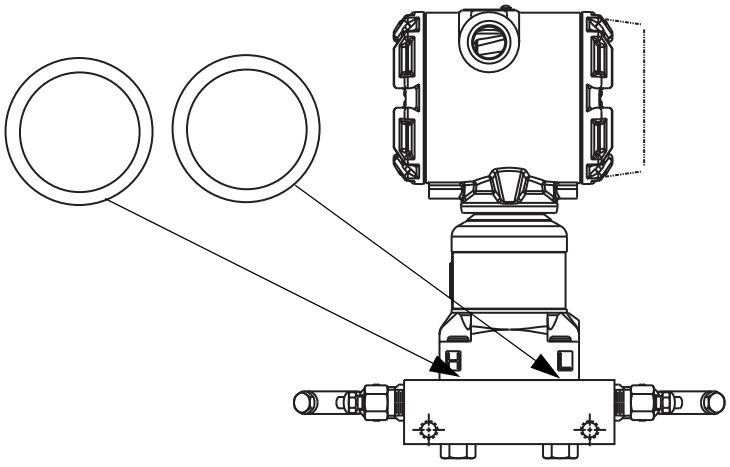

Table 10. 304 Conventional Manifolds - Process Wetted Materials of Construction

Component	SST	CS	SST with SG Option	
Body	316 SST	CS	316 SST	
Ball / Tip	316 SST /316Ti SST	316 SST	Alloy C-276	
Stem	316 SST	316 SST	Alloy C-276	
Packing	PTFE / Graphite	PTFE	PTFE / Graphite	
Bonnet	316 SST	316 SST	316 SST	
Pipe Plug	316 SST	CS	316 SST	

Table 11. 305 Integral Manifolds - Process Wetted Materials of Construction

Component	SST	Alloy C-276	316 SST with SG option	
Body	316 SST	Alloy C-276	316 SST	
Ball / Tip	316 SST /316Ti SST	Alloy C-276	Alloy C-276	
Stem	316 SST	Alloy C-276	Alloy C-276	
Packing	PTFE / Graphite	PTFE / Graphite	PTFE / Graphite	
Bonnet	316 SST	Alloy C-276	316 SST	
Pipe Plug	316 SST	Alloy C-276	316 SST	
Drain / Vent Valve	316 SST	Alloy C-276	Alloy C-276	

Table 12. 306 Inline Manifolds - Process Wetted Materials of Construction

Component	SST	Alloy C-276	316 SST with SG option	
Body	316 SST	Alloy C-276	316 SST	
Ball / Tip	316 SST /316Ti SST	Alloy C-276	Alloy C-276	
Stem	316 SST	Alloy C-276	Alloy C-276	
Packing	PTFE / Graphite	PTFE / Graphite	PTFE / Graphite	
Bonnet	316 SST	Alloy C-276	316 SST	
Pipe Plug	316 SST	Alloy C-276	316 SST	
Bleed Screw	316 SST / 316Ti SST	Alloy C-276	Alloy C-276	

Materials of Construction - Typical

Figure 6. Typical Rosemount Manifold Valve

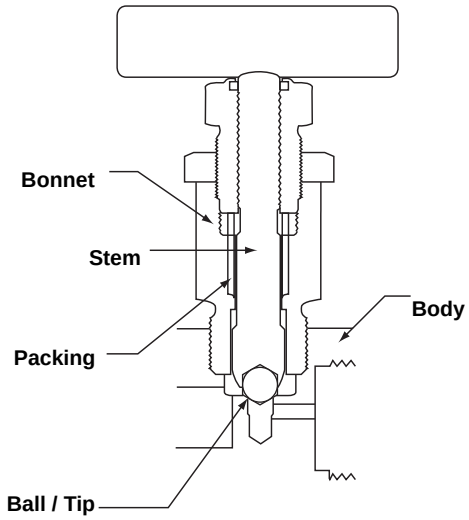

Estimated Weight

Model and Description	Weight
304	
2-valve traditional flange x NPT	5.0 lbs (2.3 kg)
2-valve traditional flange-x flange	5.5 lbs (2.5 kg)
3-valve traditional flange x NPT	5.2 lbs (2.4 kg)
3-valve traditional flange x flange	5.7 lbs (2.6 kg)
3-valve wafer flange x NPT	4.0 lbs (1.8 kg)
5-valve wafer flange x NPT	5.7 lbs (2.6 kg)
5-valve traditional flange x NPT	5.7 lbs (2.6 kg)
5-valve traditional flange x flange	5.7 lbs (2.6 kg)
305	
2-valve Coplanar	4.5 lbs (2.0 kg)
2-valve traditional	6.0 lbs (2.7 kg)
3-valve Coplanar	4.7 lbs (2.1 kg)
3-valve traditional	6.0 lbs (2.7 kg)
5-valve Coplanar	6.5 lbs (3.0 kg)
306	
Block-and-Bleed	1.1 lbs (0.5 kg)
2-valve	2.5 lbs (1.1 kg)

Dimensional Drawings

Rosemount 304 Two-Valve Flange X NPT Conventional Manifold

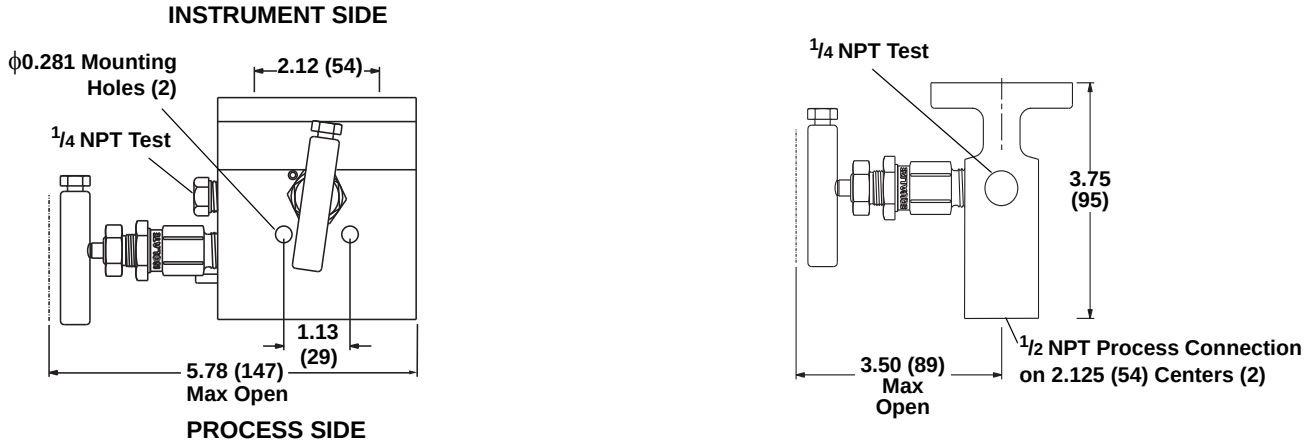

Dimensions are in inches (millimeters)

Rosemount 304 Two-Valve Flange X Flange Conventional Manifold

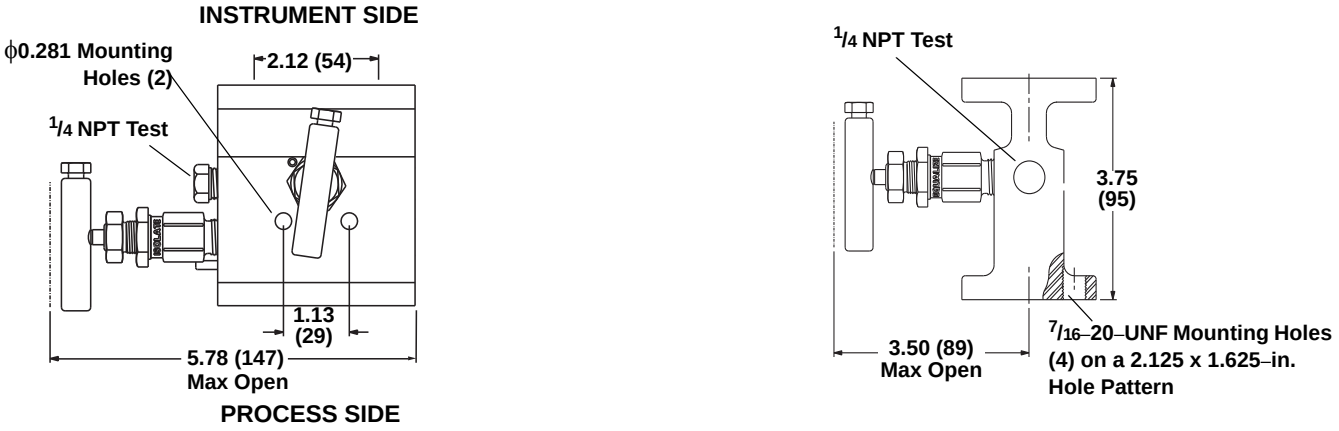

Dimensions are in inches (millimeters)

Rosemount 304 Three-Valve Flange X NPT Conventional Manifold

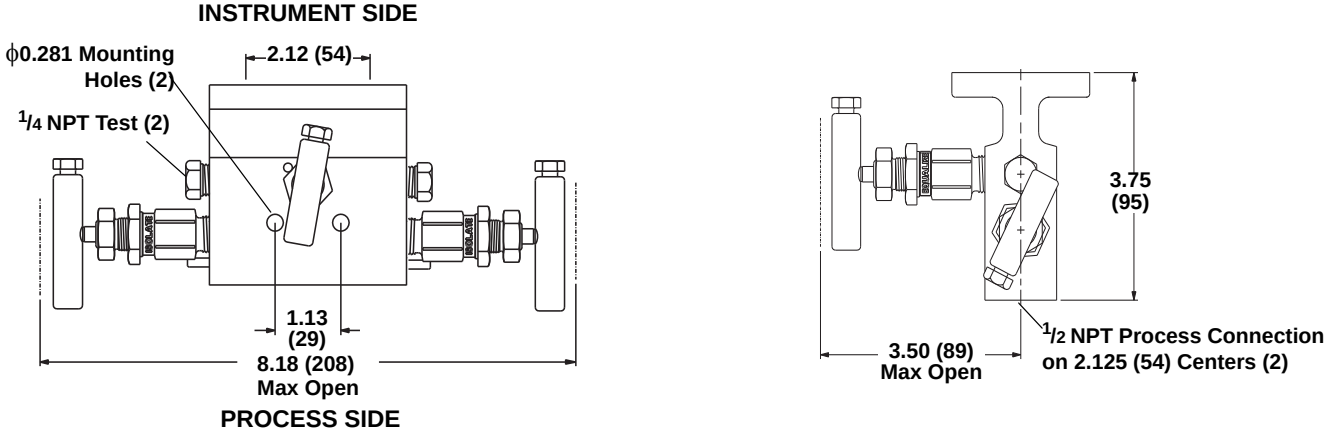

Dimensions are in inches (millimeters)

Rosemount 304 Three-Valve Flange X Flange Conventional Manifold

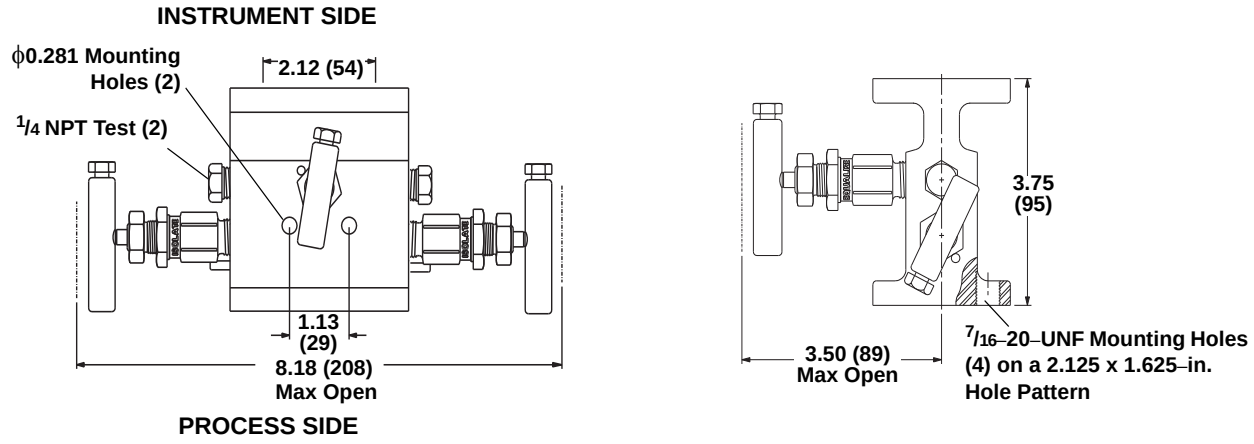

Dimensions are in inches (millimeters)

Rosemount 304 Natural Gas Five-Valve Flange X NPT Conventional Manifold

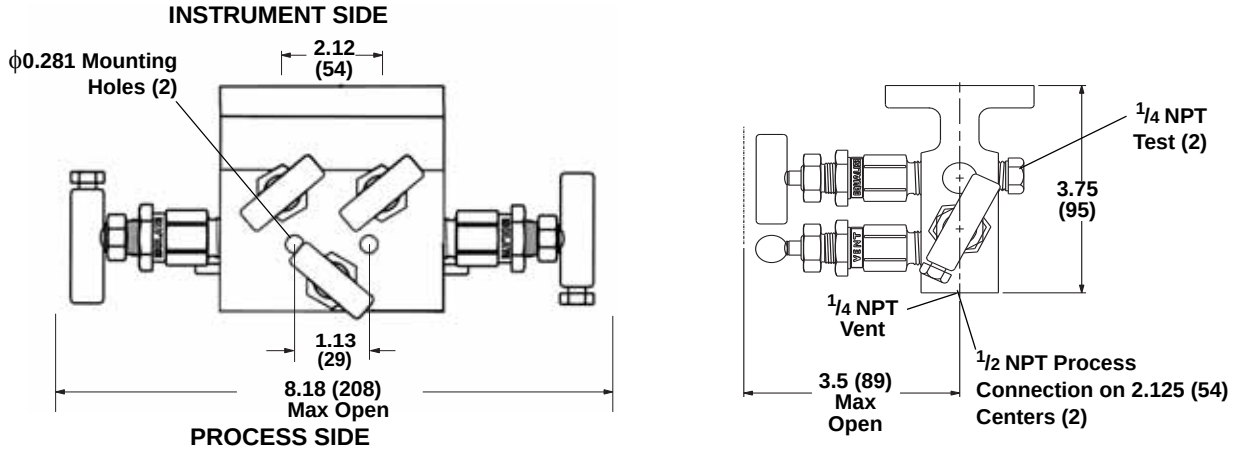

Dimensions are in inches (millimeters)

Rosemount 304 Natural Gas Five-Valve Flange X Flange Conventional Manifold

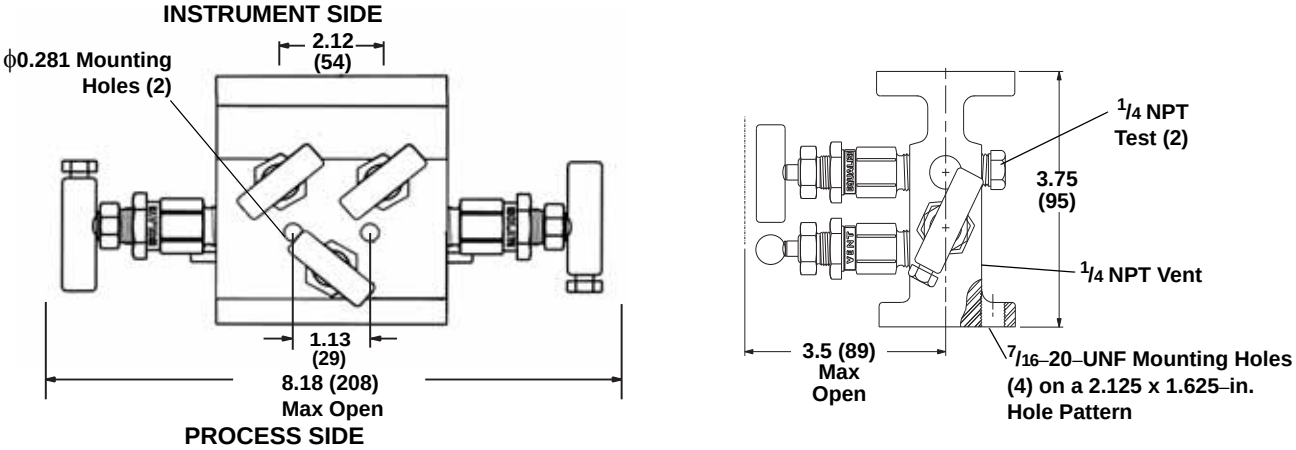

Dimensions are in inches (millimeters)

Rosemount 304 Three-Valve Wafer Manifold

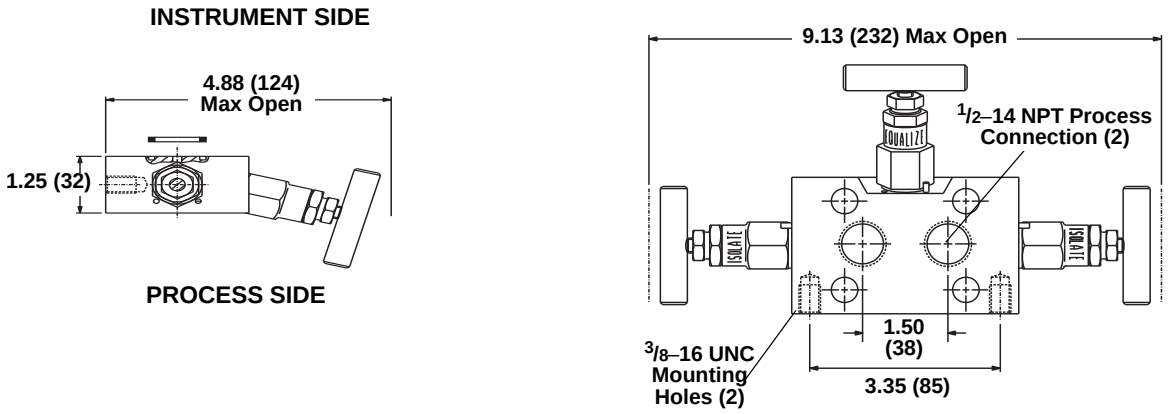

Dimensions are in inches (millimeters)

Rosemount 304 Five-Valve Wafer Manifold

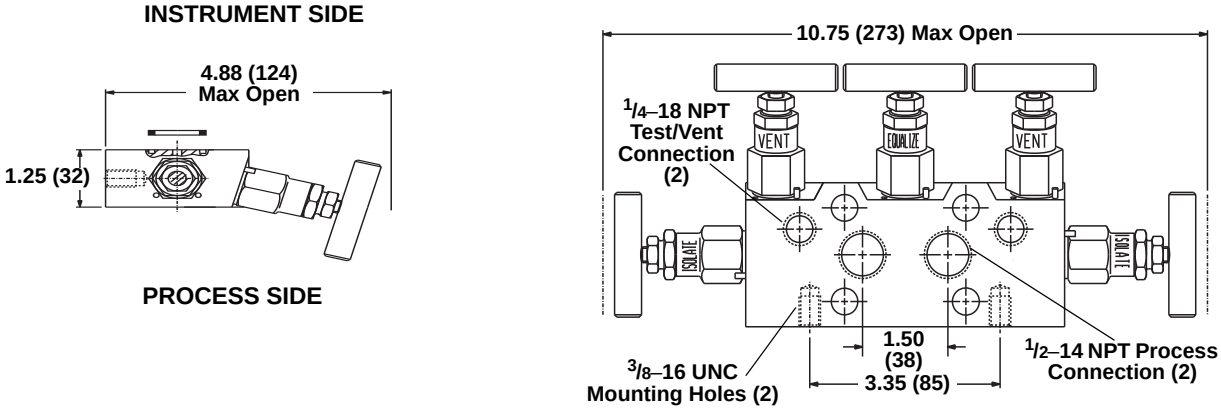

Dimensions are in inches (millimeters)

Rosemount 305R Two-Valve Coplanar Style Manifold

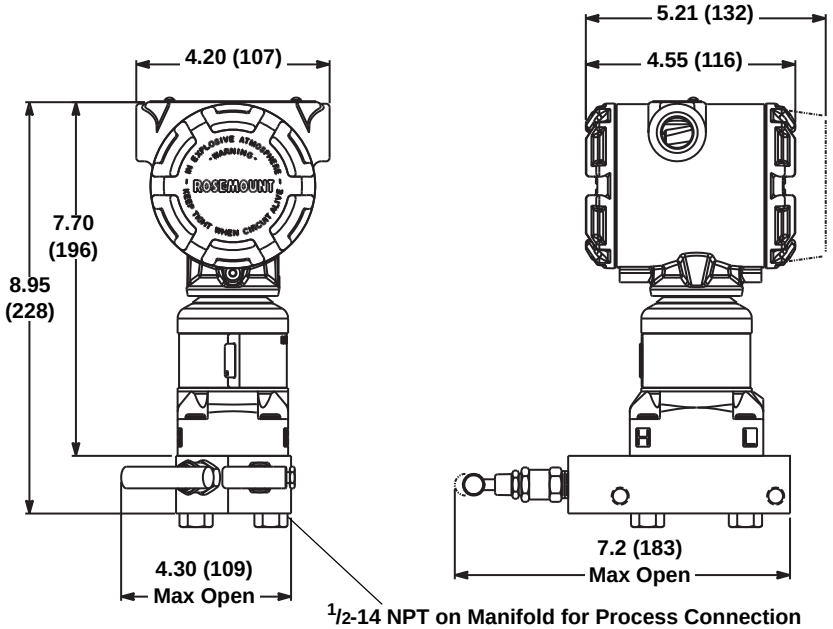

Dimensions are in inches (millimeters)

Rosemount 305R Three-Valve Coplanar Style Manifolds

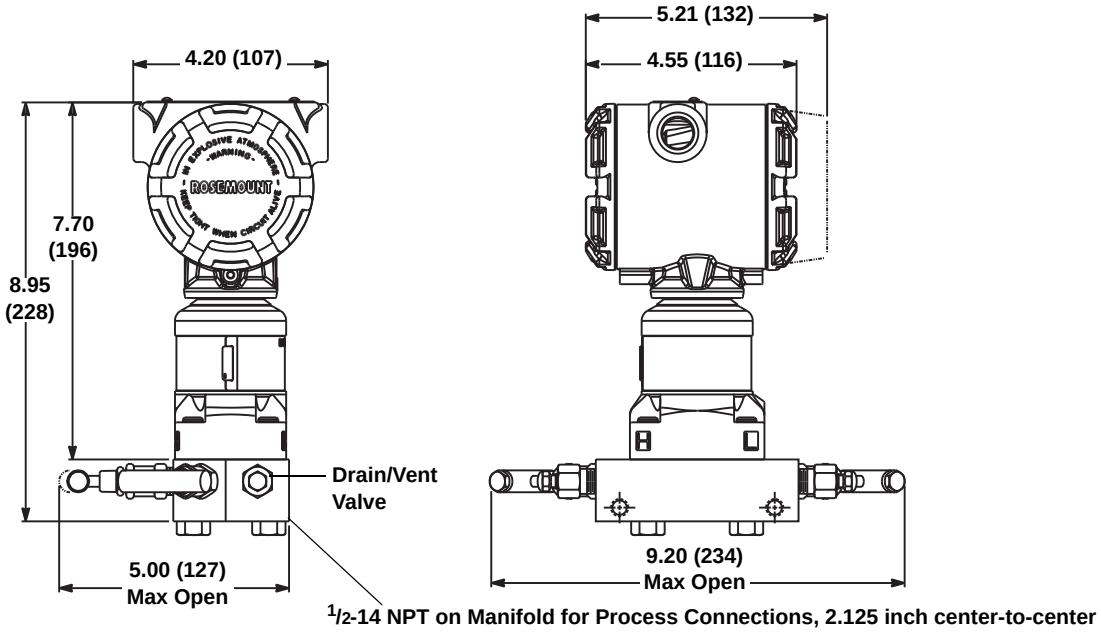

Dimensions are in inches (millimeters)

Rosemount 305R Five-Valve Coplanar Style Manifold

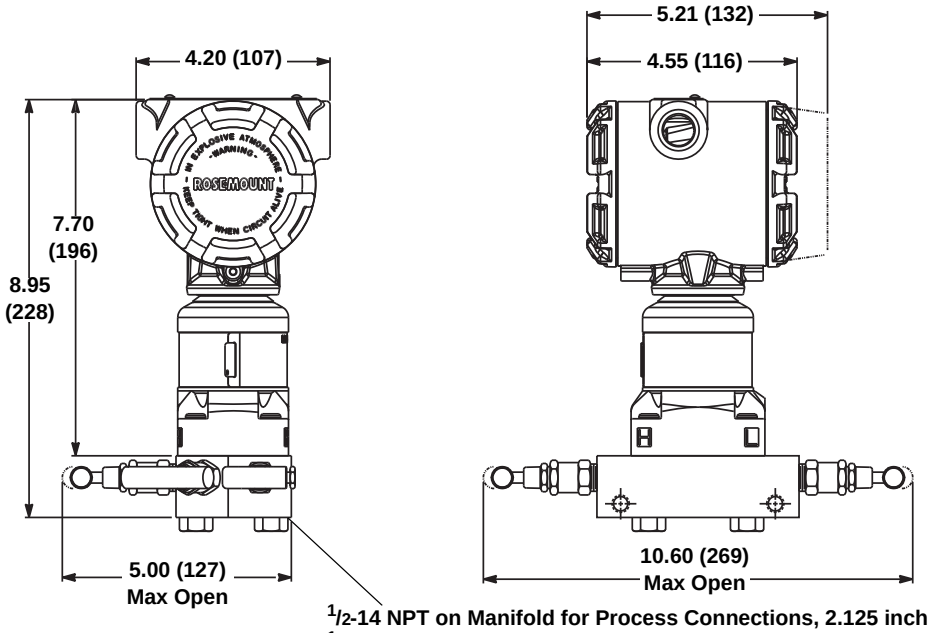

Dimensions are in inches (millimeters)

Rosemount 305RT Two-Valve Traditional Style Manifold

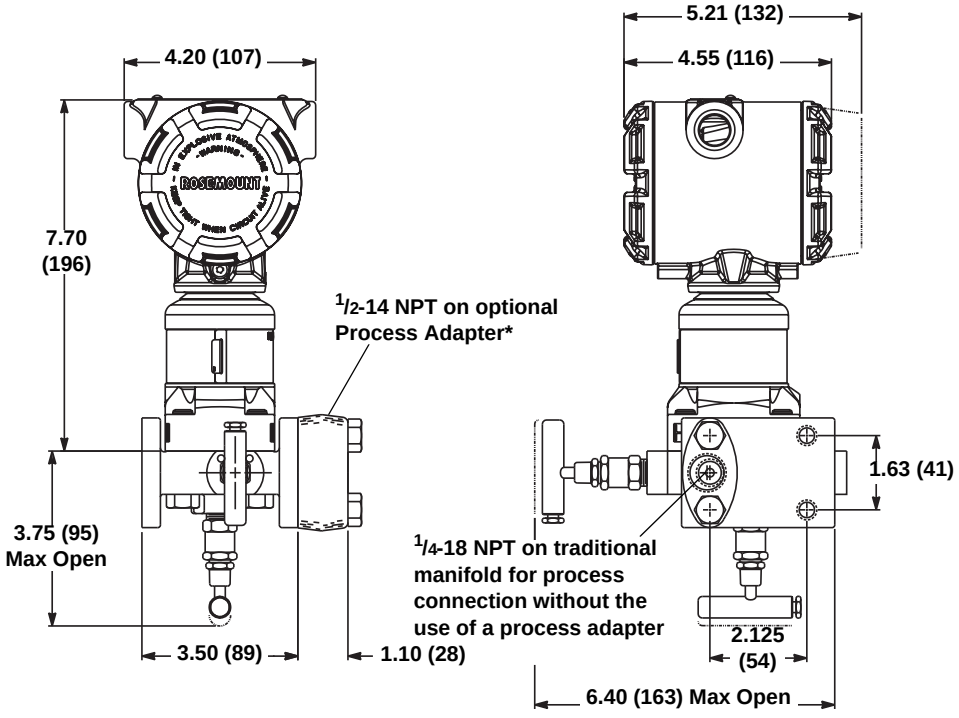

Dimensions are in inches (millimeters)

Rosemount 305RT Three-Valve Traditional Style Manifold

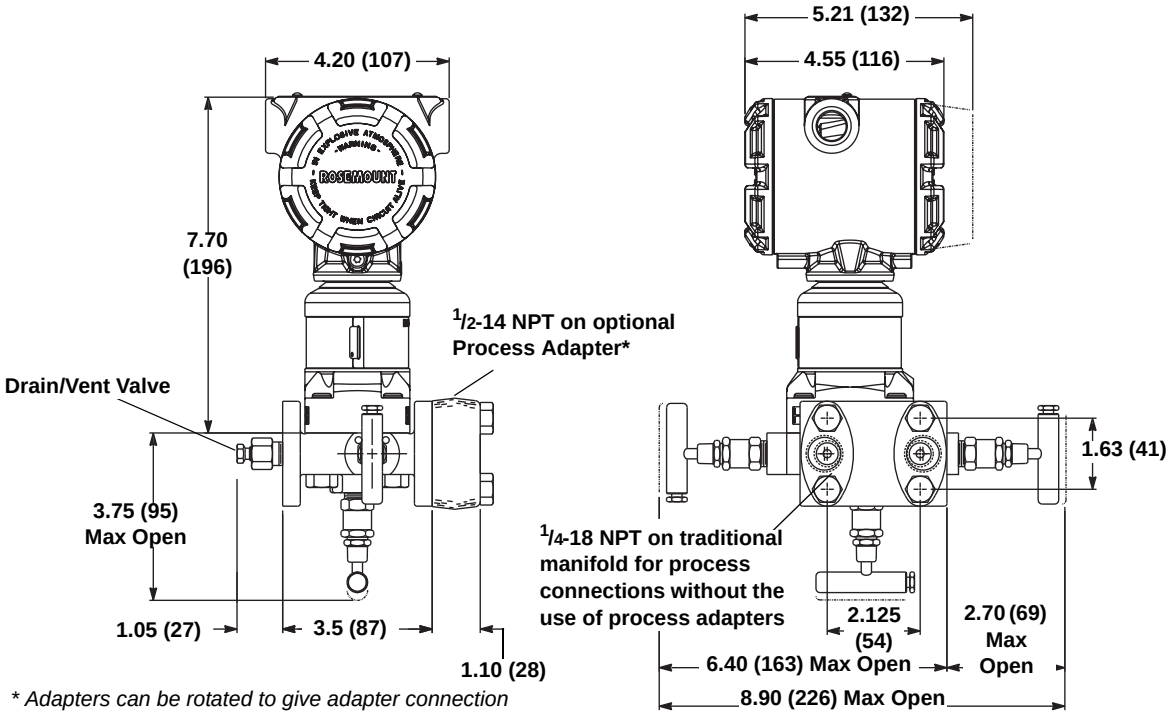

** Adapters can be rotated to give adapter connection centers of 2.0 (51), 2.125 (54), or 2.25 (57).*

Dimensions are in inches (millimeters)

Rosemount 305RM Two-Valve Traditional Style Manifold

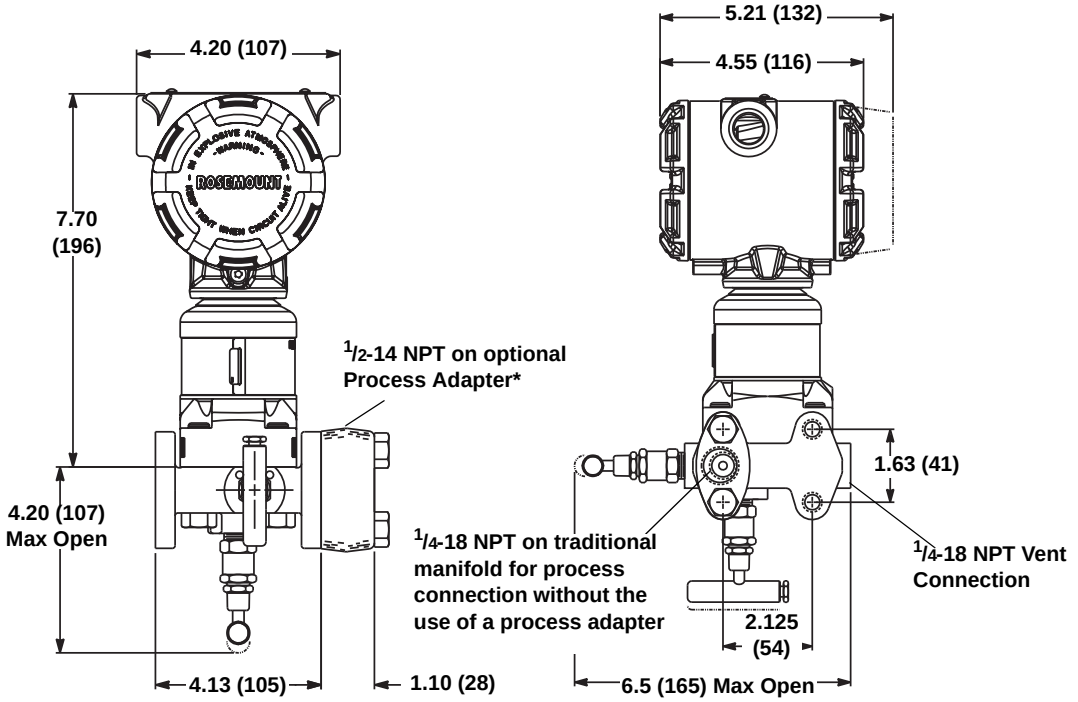

Dimensions are in inches (millimeters)

Rosemount 305RM Three-Valve Traditional Style Manifold

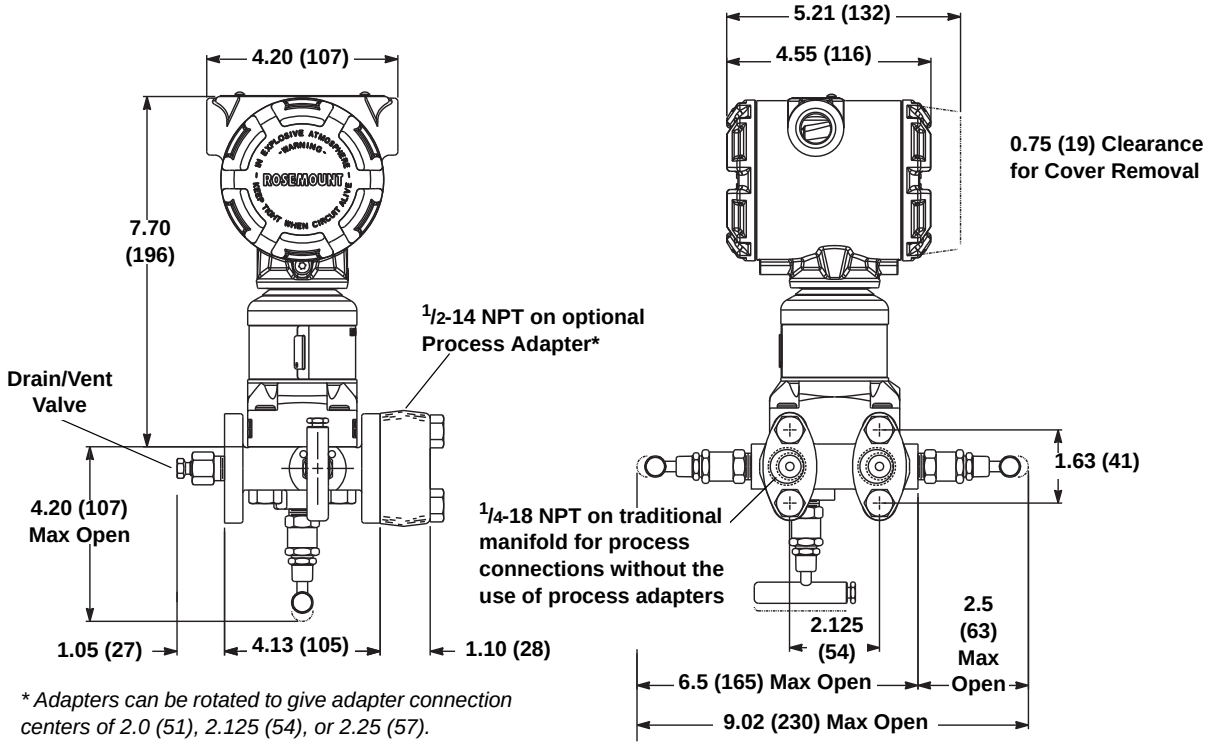

** Adapters can be rotated to give adapter connection centers of 2.0 (51), 2.125 (54), or 2.25 (57).*

Dimensions are in inches (millimeters)

Rosemount 305RM Five-Valve Traditional Style Manifold

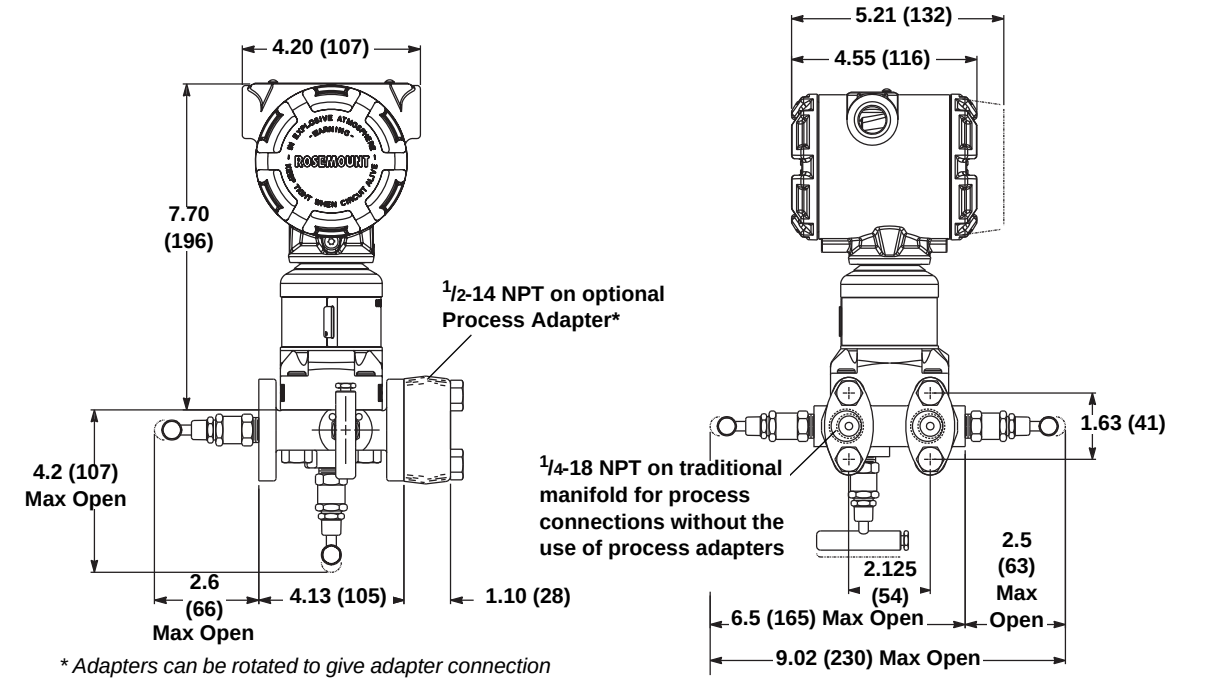

** Adapters can be rotated to give adapter connection centers of 2.0 (51), 2.125 (54), or 2.25 (57).*

Dimensions are in inches (millimeters)

Rosemount 306R Pressure Style Manifold (3051S_T Shown)

BLOCK AND BLEED STYLE

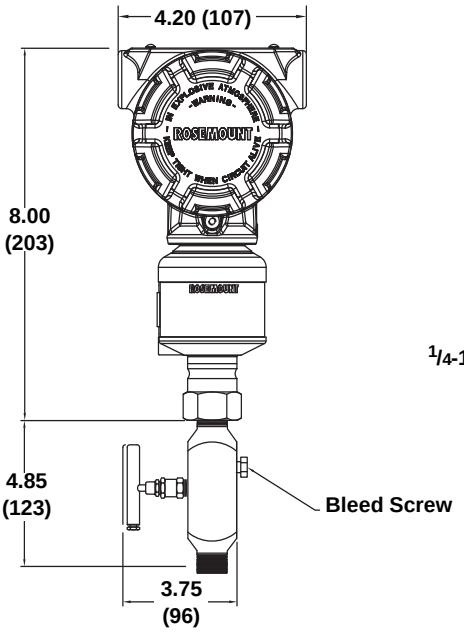

TWO-VALVE STYLE

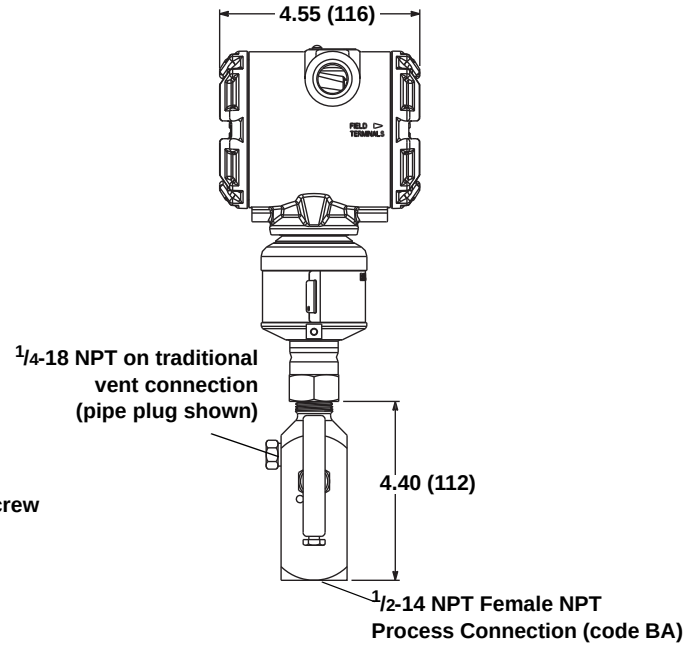

Manifold valve orientation may vary with respect to transmitter mounting holes.

Dimensions are in inches (millimeters)

Installations for Rosemount 3051T and 3051S_T Transmitters for Panel Mounting

ROSEMOUNT 3051T

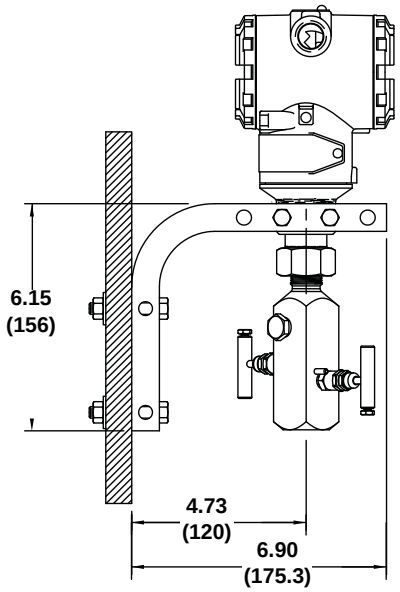

ROSEMOUNT 3051S_T

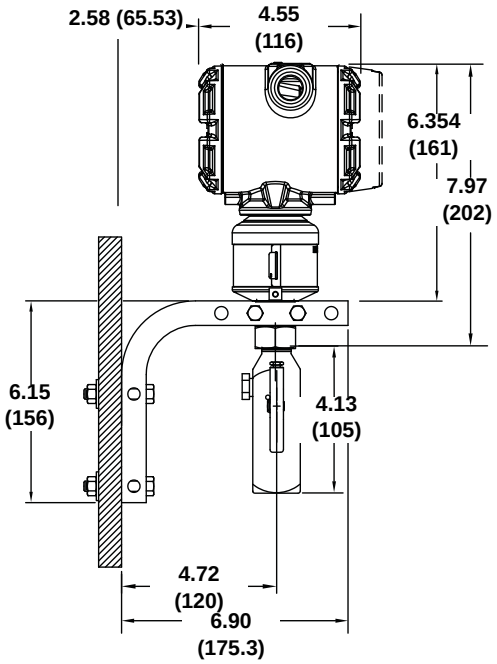

Manifold valve orientation may vary with respect to transmitter mounting holes.

Dimensions are in inches (millimeters)

Installations for Rosemount 3051T and 3051S_T Transmitters for 2-in. Pipe Mounting

ROSEMOUNT 3051T

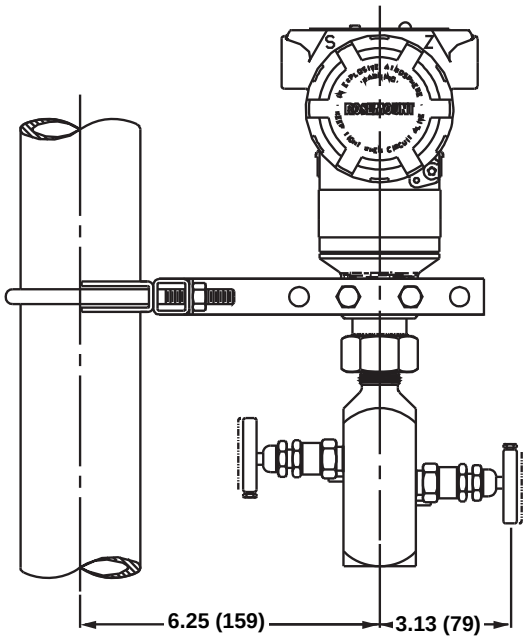

ROSEMOUNT 3051S_T

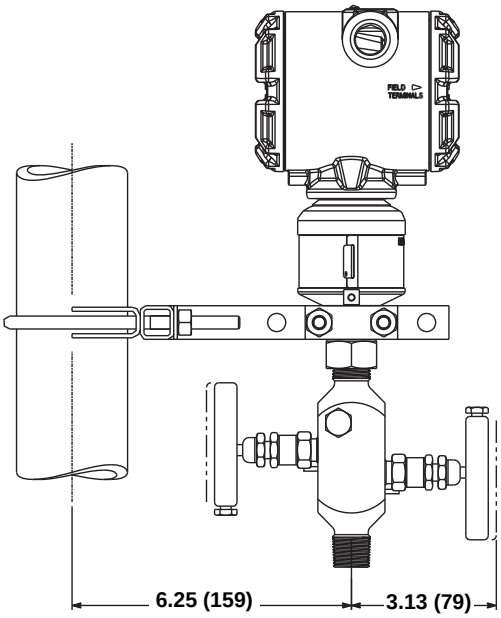

Manifold valve orientation may vary with respect to transmitter mounting holes.

Dimensions are in inches (millimeters)

Coplanar Manifold with Optional Bracket for 2-in. Pipe Mounting

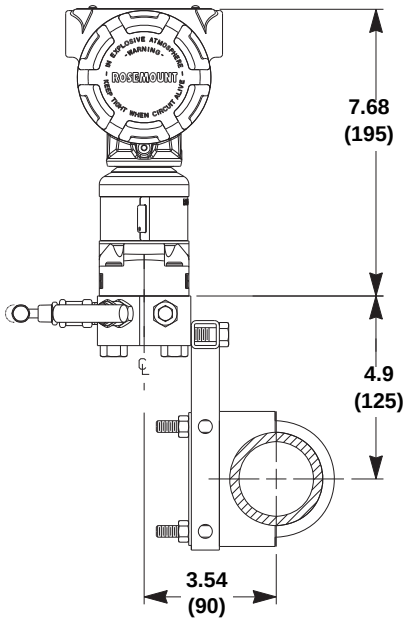

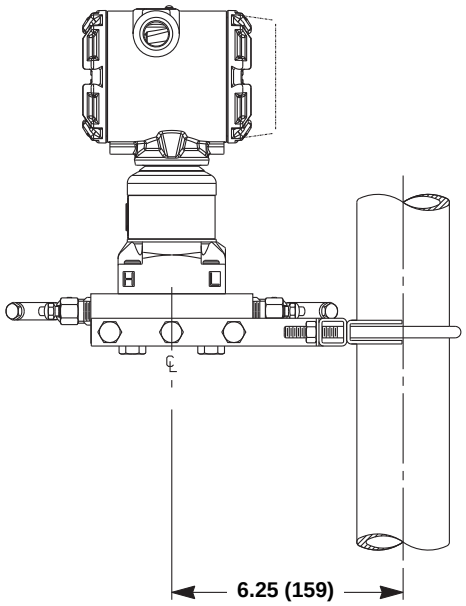

OPTION CODE B4

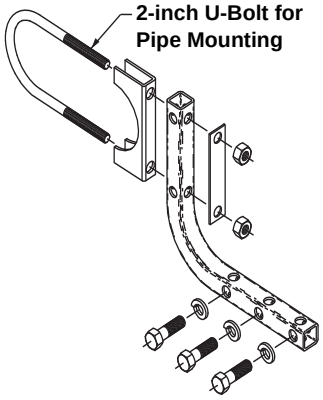

Dimensions are in inches (millimeters)

Traditional Manifold with Optional Brackets for 2-in. Pipe Mounting

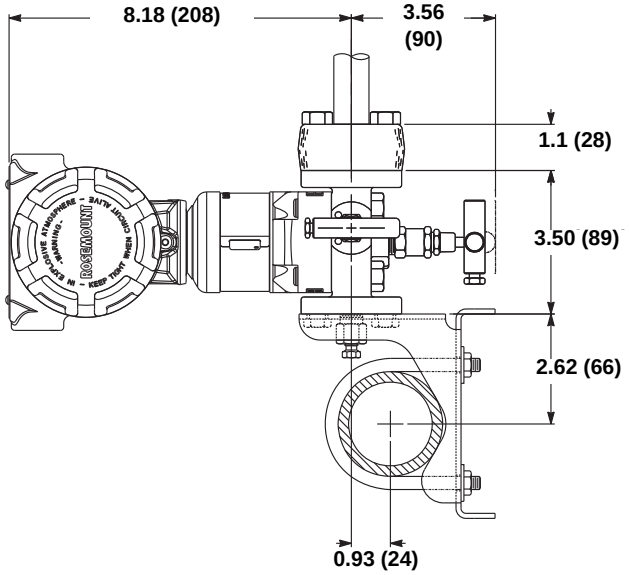

B3/B9/BC MOUNTING BRACKET

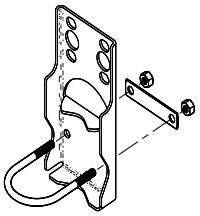

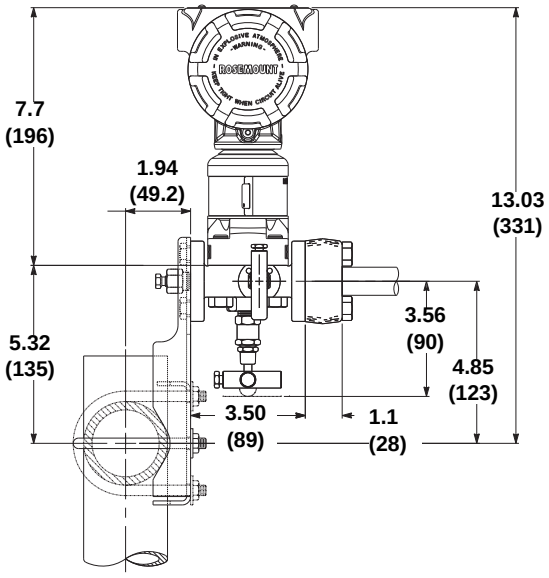

B1/B7/BA MOUNTING BRACKET

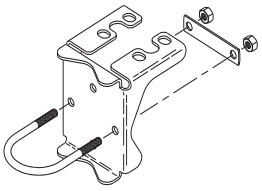

Dimensions are in inches (millimeters)

VS/VC Heavy Duty Manifold Mounting Bracket

2-IN. PIPE MOUNT

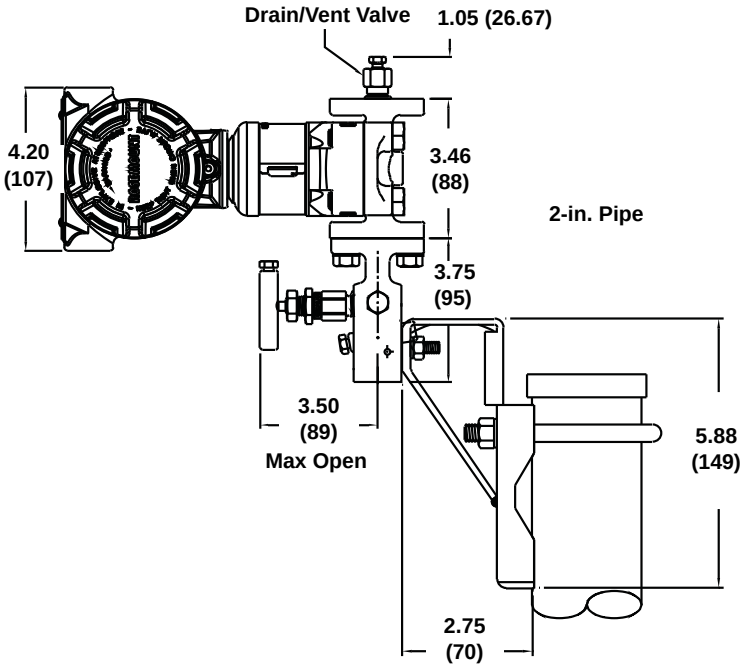

PANEL MOUNT

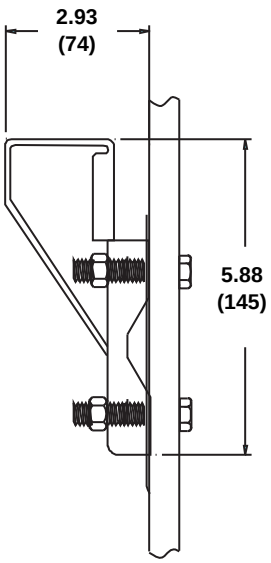

Dimensions are in inches (millimeters)

OPTIONS

Module Guard

A sensor module guard is available to protect the transmitter process isolating diaphragms. This guard should be used whenever the transmitter is removed from the integral manifold to avoid damage to the isolating diaphragms.

- Part number: 00305-1000-0001 (5/pack)

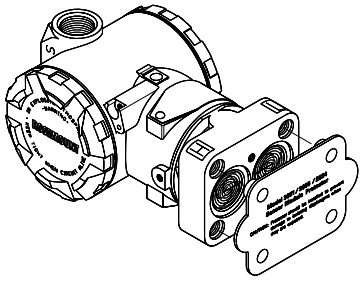

P2 Cleaning for Special Services

Per ASTM G93-96, this option minimizes process contaminants by cleaning wetted surfaces with a suitable detergent.

SG Sour Gas

Materials of Construction comply with recommendations per NACE MR 0175/ISO 15156 for sour oil field production environments. Environmental limits apply to certain materials. Consult latest standard for details. Selected materials also conform to NACE MR0103 for sour refining environments.

Heat Block Kits

Rosemount 304 Manifolds are available with steam heat block kits for cold environments and services. The steam block attaches directly to the manifold to prevent the process from freezing.

ASME B31.1 Power Piping Code

Rosemount Manifolds are available in configurations that meet the requirements of the ASME B31.1 Power Piping Code. This code specifies design criteria for most air, gas, steam, water, and oil systems used in electric generating systems, central and district heating systems, industrial power plants, and geothermal plants. ASME B31.1 includes requirements for manifolds, valves, and piping. Transmitters and other measuring devices do not fall within the scope of this code.

Marking

Manifolds are tagged with a part number, schematic drawing, temperature, and pressure limits.

Other Publications

For additional information, go to www.rosemount.com.

SPARE PARTS LIST

Table 13. Rosemount 304 Conventional Manifold

Part Description	Part Number (Traditional Style)	Part Number (Wafer Style)
Mounting Brackets (qty. 1)		
Manifold Heavy Duty Mounting Bracket, CS	01166-8005-0002	NA
Manifold Heavy Duty Mounting Bracket, SST	01166-8005-0001	NA
Manifold SST Mounting Bracket for 2-in. Pipe Mount	NA	00305-0405-0001
O-Rings (set of 12)		
Manifold-to-Flange O-Ring, Glass-filled PTFE	03031-0019-0003	03031-0019-0003
Manifold-to-Flange O-Ring, Graphite-filled PTFE	03031-1302-0002	03031-1302-0002
Manifold-to-Flange Bolt Kits (set of 4)		
Consult factory for part numbers	Consult Factory	Consult Factory
Heater Block Kits (qty. 1)		
Steam Block Kit	00305-0406-0001	NA

Table 14. Rosemount 305 Integral Manifold

Part Description	Part Number (Traditional Style)	Part Number (Coplanar Style)
Mounting Brackets (qty. 1)		
Manifold SST Mounting Bracket for 2-in Pipe Mount	NA	00305-0405-0001
Bolt Kits (set of 4)		
CS Bolt Kit	03031-0312-0001	03031-0311-0001
SST Bolt Kit	03031-0312-0002	03031-0311-0002
ANSI/ASTM-A-193-B7M Bolt Kit	03031-0312-0003	03031-0311-0003
Drain/Vents (qty. 1)		
316 SST Drain/Vent for use with 3-valve 305 Manifold	01151-0028-0012	01151-0028-0012
Alloy C-276 Drain/Vent for use with 3-valve 305 Manifold	01151-0028-0013	01151-0028-0013
Coplanar Flange Kits (qty. 1)		
Differential Flange Kit, SST	NA	00305-1001-0001
Gauge Flange Kit, SST	NA	00305-1001-1001
O-Rings (set of 12)		
Manifold-to-Module O-Ring, Glass-filled PTFE	03031-0234-0001	03031-0234-0001
Manifold-to-Module O-Ring, Graphite-filled PTFE	03031-0234-0002	03031-0234-0002
Sensor Guard (set of 5)		
Coplanar Module Sensor Guard	00305-1000-0001	00305-1000-0001

Rosemount Manifolds

Product Data Sheet
00813-0100-4733, Rev NB
January 2011

Standard Terms and Conditions of Sale can be found at www.rosemount.com\terms_of_sale
The Emerson logo is a trade mark and service mark of Emerson Electric Co.
Rosemount and the Rosemount logotype are registered trademarks of Rosemount Inc.
Coplanar is a trademark of Rosemount Inc.
© 2010 Rosemount, Inc. All rights reserved.

Emerson Process Management
Rosemount Measurement
8200 Market Boulevard
Chanhassen MN 55317 USA
Tel (USA) 1 800 999 9307
Tel (International) +1 952 906 8888
Fax +1 952 949 7001

Emerson Process Management
Blegistrasse 23
P.O. Box 1046
CH 6341 Baar
Switzerland
Tel +41 (0) 41 768 6111
Fax +41 (0) 41 768 6300

Emerson FZE
P.O. Box 17033
Jebel Ali Free Zone
Dubai UAE
Tel +971 4 811 8100
Fax +971 4 886 5465

Emerson Process Management Asia Pacific Pte Ltd
1 Pandan Crescent
Singapore 128461
Tel +65 6777 8211
Fax +65 6777 0947
Service Support Hotline : +65 6770 8711
Email : Enquiries@AP.EmersonProcess.com

00813-0100-4733 Rev NB, 1/11

EMERSON™
Process Management

Quick Start Guide
00825-0100-4001, rev. JA
March 2013

Rosemount 3051 Pressure Transmitter

with 4-20 mA HART and 1-5 Vdc Low Power Protocol

Rosemount 3051CF Series Flowmeter Transmitter

with 4-20 mA HART and 1-5 Vdc Low Power Protocol





ROSEMOUNT

EMERSON.
Process Management

© 2013 Rosemount Inc. All rights reserved. All marks property of owner. Rosemount and the Rosemount logotype are registered trademarks of Rosemount Inc.

NOTICE

This installation guide provides basic guidelines for Rosemount 3051 transmitters. It does not provide instructions for configuration, diagnostics, maintenance, service, troubleshooting, Explosion-Proof, Flame-Proof, or intrinsically safe (I.S.) installations. Refer to the 3051 reference manual (document number 00809-0100-4001) for more instruction. This manual is also available electronically on www.emersonprocess.com/rosemount.

⚠ WARNING

Explosions could result in death or serious injury:

Installation of this transmitter in an explosive environment must be in accordance with the appropriate local, national, and international standards, codes, and practices. Please review the approvals section of the 3051 reference manual for any restrictions associated with a safe installation.

- Before connecting a HART-based communicator in an explosive atmosphere, make sure the instruments in the loop are installed in accordance with intrinsically safe or non-incendive field wiring practices.
- In an Explosion-Proof/Flame-Proof installation, do not remove the transmitter covers when power is applied to the unit.

Process leaks may cause harm or result in death.

- To avoid process leaks, only use the o-ring designed to seal with the corresponding flange adapter.

Electrical shock can result in death or serious injury.

- Avoid contact with the leads and the terminals. High voltage that may be present on leads can cause electrical shock.

Conduit/Cable Entries

- Unless marked, the conduit/cable entries in the transmitter housing use a $^{1}/_{2}$-14 NPT thread form. Only use plugs, adapters, glands, or conduit with a compatible thread form when closing these entries.

Contents

Mount the transmitter . . . . . page 3
Consider housing rotation . . . . page 7
Set the jumpers . . . . . page 8
Connect the wiring and power up . . . page 8
Verify configuration . . . . . page 12
Trim the transmitter . . . . . page 15
Safety Instrumented Systems page 17
Product certifications . . . . . page 20

Step 1: Mount the transmitter

Liquid Flow Applications

1. Place taps to the side of the line.
2. Mount beside or below the taps.
3. Mount the transmitter so that the drain/vent valves are oriented upward.

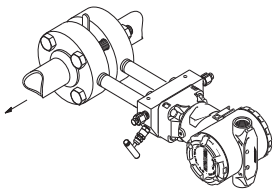

Gas Flow Applications

1. Place taps in the top or side of the line.
2. Mount beside or above the taps.

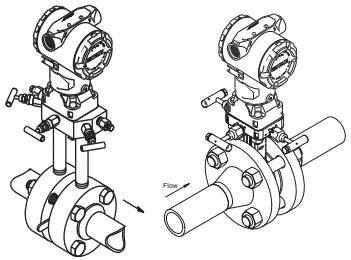

Steam Flow Applications

1. Place taps to the side of the line.
2. Mount beside or below the taps.
3. Fill impulse lines with water.

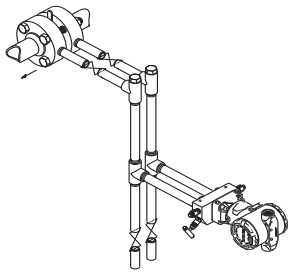

Step 1 continued...

Panel Mount[1]	Pipe Mount
Coplanar Flange	
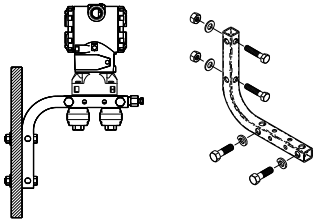	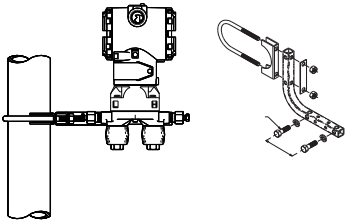
Traditional Flange	
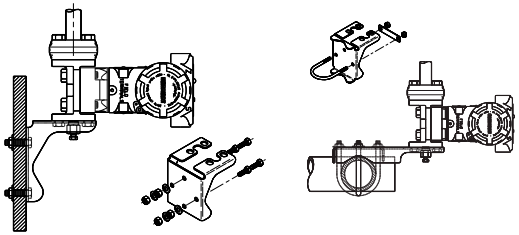	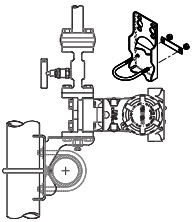
Rosemount 3051T	
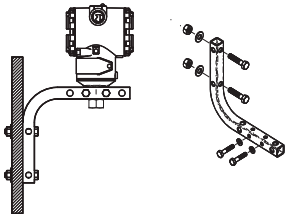	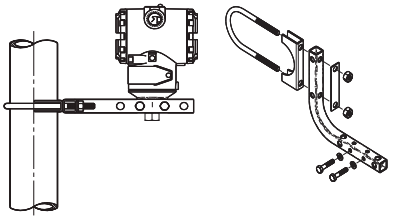
Rosemount 3051H	
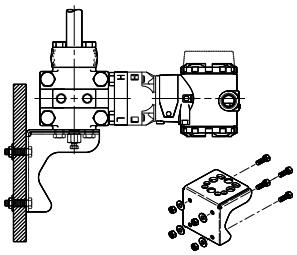	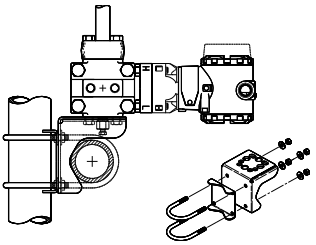

1.Panel bolts are customer supplied.

Step 1 continued...

Bolting considerations

If the transmitter installation requires assembly of the process flanges, manifolds, or flange adapters, follow these assembly guidelines to ensure a tight seal for optimal performance characteristics of the transmitters. Use only bolts supplied with the transmitter or sold by Emerson as spare parts. Figure 1 illustrates common transmitter assemblies with the bolt length required for proper transmitter assembly.

Figure 1. Common Transmitter Assemblies

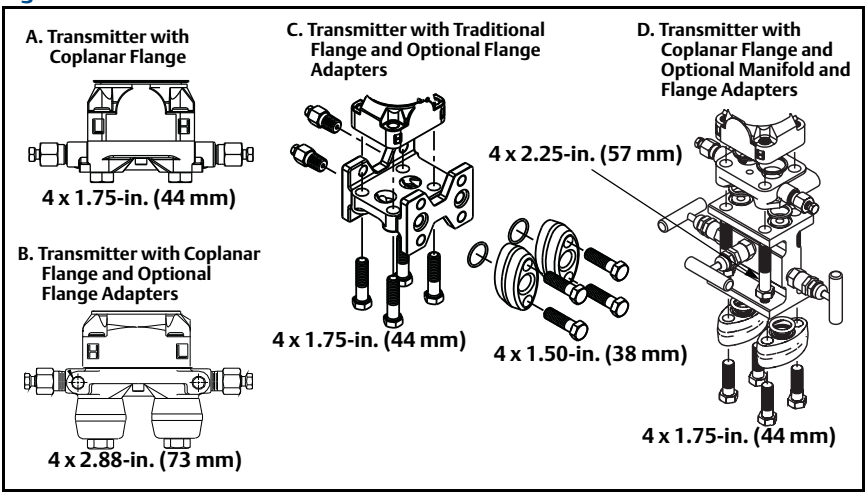

Bolts are typically carbon steel or stainless steel. Confirm the material by viewing the markings on the head of the bolt and referencing Figure 2. If bolt material is not shown in Figure 2, contact the local Emerson Process Management representative for more information.

Use the following bolt installation procedure:

1. Carbon steel bolts do not require lubrication and the stainless steel bolts are coated with a lubricant to ease installation. However, no additional lubricant should be applied when installing either type of bolt.
2. Finger-tighten the bolts.
3. Torque the bolts to the initial torque value using a crossing pattern. See Figure 2 for initial torque value.
4. Torque the bolts to the final torque value using the same crossing pattern. See Figure 2 for final torque value.
5. Verify that the flange bolts are protruding through the isolator plate before applying pressure.

Step 1 continued...

Figure 2. Torque values for the flange and flange adapter bolts

Bolt Material	Head Markings	Initial Torque	Final Torque
Carbon Steel (CS)		300 in.-lbs.	650 in.-lbs.
Stainless Steel (SST)	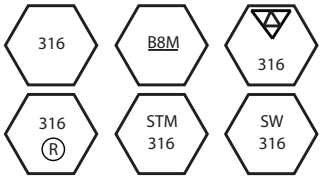	150 in.-lbs.	300 in.-lbs.

O-rings with Flange Adapters

⚠ WARNING

Failure to install proper flange adapter O-rings may cause process leaks, which can result in death or serious injury. The two flange adapters are distinguished by unique O-ring grooves. Only use the O-ring that is designed for its specific flange adapter, as shown below.

Rosemount 3051S / 3051 / 2051 / 3001 / 3095

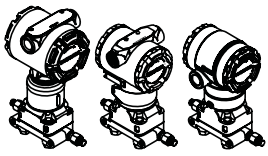

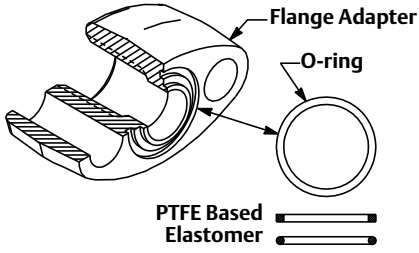

Rosemount 1151



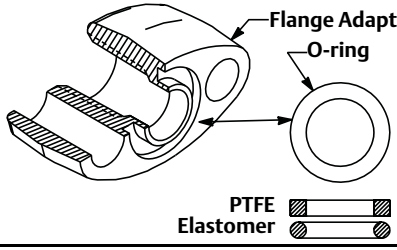

Step 1 continued...

⚠ Whenever the flanges or adapters are removed, visually inspect the o-rings. Replace them if there are any signs of damage, such as nicks or cuts. If you replace the o-rings, re-torque the flange bolts and alignment screws after installation to compensate for seating of the PTFE o-ring.

Inline gage transmitter orientation

The low side pressure port (atmospheric reference) on the inline gage transmitter is located in the neck of the transmitter, behind the housing. The vent path is 360° around the transmitter between the housing and sensor. (See Figure 3.)

Keep the vent path free of any obstruction, including but not limited to paint, dust, and lubrication by mounting the transmitter so that the process can drain away.

Figure 3. Inline Gage Low Side Pressure Port

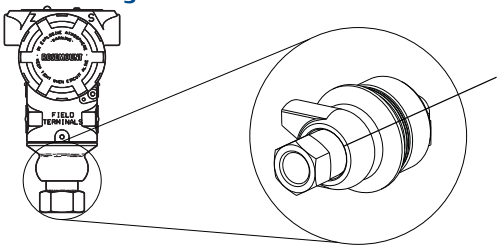

Step 2: Consider housing rotation

To improve field access to wiring or to better view the optional LCD display:

1. Loosen the housing rotation set screw.
2. First rotate the housing clockwise to the desired location. If the desired location cannot be achieved due to thread limit, rotate the housing counter clockwise to the desired location (up to 360° from thread limit).
3. Retighten the housing rotation set screw.

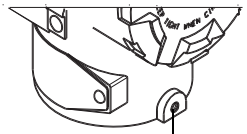

Step 3: Set the jumpers

If alarm and security jumpers are not installed, the transmitter will operate normally with the default alarm condition alarm *high* and the security *off*.

1. If the transmitter is installed, secure the loop, and remove power.
2. Remove the housing cover opposite the field terminal side. Do not remove the instrument cover in explosive atmospheres when the circuit is live.
3. Reposition the jumper. Avoid contact with the leads and the terminals. See Figure 4 for the location of the jumper and the ON and OFF positions.

Reattach the transmitter cover. The cover must be fully engaged to comply with explosion-proof requirements.

Figure 4. Transmitter Electronics Board

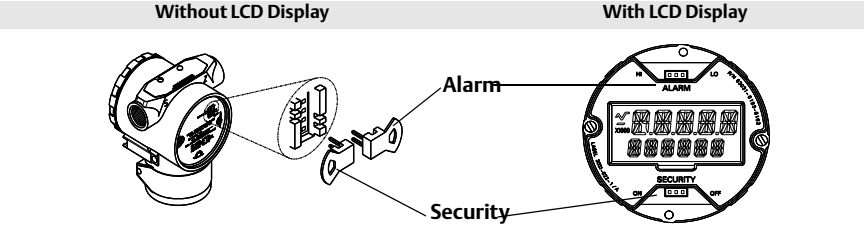

Step 4: Connect the wiring and power up

Use the following steps to wire the transmitter:

1. Remove the housing cover on the FIELD TERMINALS side.
2. Connect the positive lead to the "+" terminal (PWR/COMM) and the negative lead to the "–" terminal.
3. Ensure proper grounding. It is important that the instrument cable shield:
   - be trimmed close and insulated from touching the transmitter housing
   - be connected to the next shield if cable is routed through a junction box
   - be connected to a good earth ground at the power supply end

Note

Do not connect the powered signal wiring to the test terminals. Power could damage the test diode in the test connection. Shielded twisted pair cable should be used for best results. Use 24 AWG or larger wire and do not exceed 5,000 feet (1500 meters).

4. Plug and seal unused conduit connections.
5. If applicable, install wiring with a drip loop. Arrange the drip loop so the bottom is lower than the conduit connections and the transmitter housing.
6. Replace the housing cover.

Step 4 continued...

Figure 5 shows wiring connections necessary to power a 3051 and enable communications with a hand-held Field Communicator. For low-power transmitters, refer to the reference manual.

Figure 5. Transmitter Wiring Diagrams (4–20 mA)

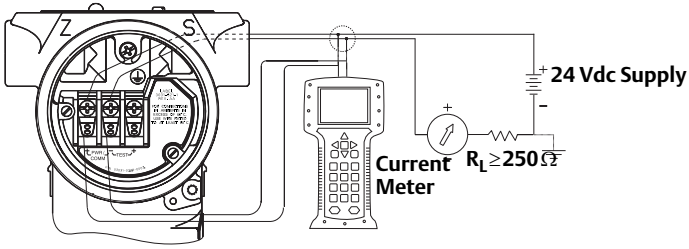

Figure 6. Low Power Transmitter Wiring

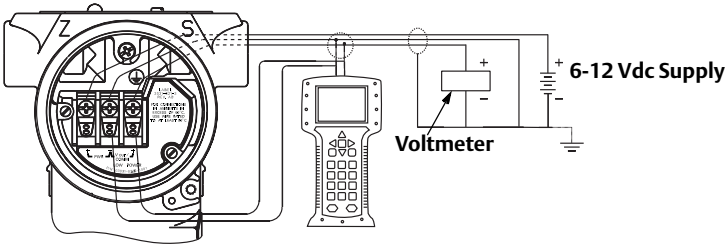

Installation of the transient protection terminal block does not provide transient protection unless the 3051 case is properly grounded.

Step 4 continued...

Signal wiring grounding

Do not run signal wiring in conduit or open trays with power wiring, or near heavy electrical equipment. Grounding terminations are provided on the outside of the electronics housing and inside the Terminal Compartment. These grounds are used when transient protect terminal blocks are installed or to fulfill local regulations. See Step 2 below for more information on how the cable shield should be grounded.

1. Remove the Field Terminals housing cover.
2. Connect the wiring pair and ground as indicated in Figure 7. The cable shield should:
   a. Be trimmed close and insulated from touching the transmitter housing.
   b. Continuously connect to the termination point.
   c. Be connected to a good earth ground at the power supply end.

Figure 7. Wiring

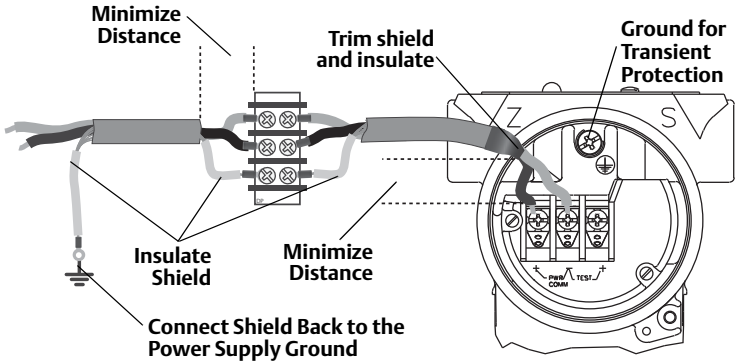

3. Replace the housing cover. It is recommended that the cover be tightened until there is no gap between the cover and the housing.
4. Plug and seal unused conduit connections.

Power Supply for 4-20 mA HART

Transmitter operates on 10.5 - 42.4 Vdc. The dc power supply should provide power with less than two percent ripple.

Figure 8. Load Limitation

Maximum Loop Resistance = 43.5 * (Power Supply Voltage – 10.5)

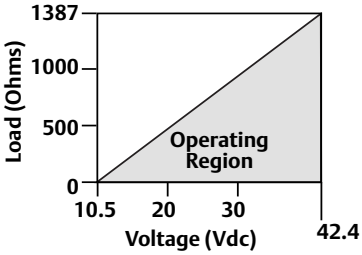

The Field Communicator requires a minimum loop resistance of 250W for communication.

The total resistance load is the sum of the resistance of the signal leads and the load resistance of the controller, indicator, and related pieces. Note that the resistance of intrinsic safety barriers, if used, must be included.

Power Supply for 1-5 Vdc HART Low Power

Low power transmitters operate on 6–12 Vdc. The dc power supply should provide power with less than two percent ripple. The V_{out} load should be 100 kW or greater.

Step 5: Verify configuration

Field Communicator user interface

The Traditional Interface - Device Revision 3 and DD Revision 2 Fast Key Sequence can be found on page 13.

Figure 9. Traditional Interface - Device Revision 3 and DD Revision 2

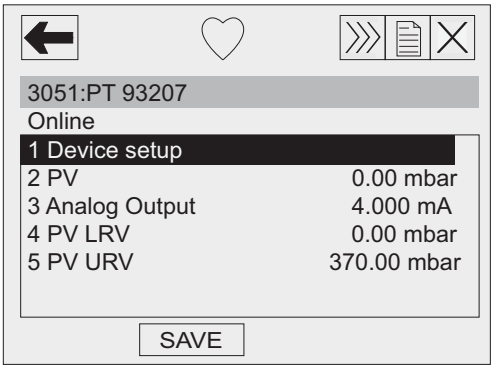

The Device Dashboard - Device Revision 3 and DD Revision 6 Fast Key Sequence can be found on page 14.

Figure 10. Device Dashboard - Device Revision 3 and DD Revision 6

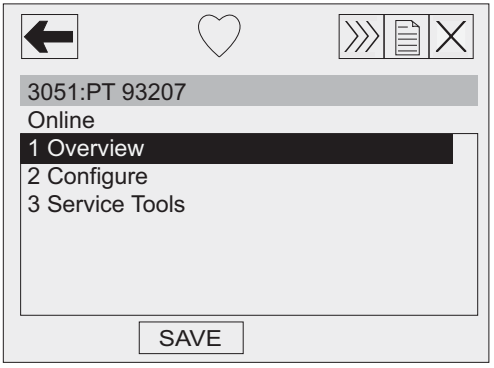

Note:
A check (✓) indicates the basic configuration parameters. At minimum, these parameters should be verified as part of the configuration and startup procedure.

Table 1. Traditional Interface - Device Revision 3 and DD Revision 2 Fast Key Sequence

	Function	Fast Key Sequence
✓	Alarm and Saturation Levels	1, 4, 2, 7
	Analog Output Alarm Type	1, 4, 3, 2, 4
	Burst Mode Control	1, 4, 3, 3, 3
	Burst Operation	1, 4, 3, 3, 3
	Custom Meter Configuration	1, 3, 7, 2
	Custom Meter Value	1, 4, 3, 4, 3
✓	Damping	1, 3, 6
	Date	1, 3, 4, 1
	Descriptor	1, 3, 4, 2
	Digital To Analog Trim (4-20 mA Output)	1, 2, 3, 2, 1
	Disable Local Span/Zero Adjustment	1, 4, 4, 1, 7
	Field Device Information	1, 4, 4, 1
	Full Trim	1, 2, 3, 3
	Keypad Input – Rerange	1, 2, 3, 1, 1
	Local Zero and Span Control	1, 4, 4, 1, 7
	Loop Test	1, 2, 2
	Lower Sensor Trim	1, 2, 3, 3, 2
	Message	1, 3, 4, 3
	Meter Options	1, 4, 3, 4
	Number of Requested Preambles	1, 4, 3, 3, 2
	Poll Address	1, 4, 3, 3, 1
	Poll a Multidropped Transmitter	Left Arrow, 4, 1, 1
✓	Range Values	1, 3, 3
	Rerange	1, 2, 3, 1
	Scaled D/A Trim (4–20 mA Output)	1, 2, 3, 2, 2

	Function	Fast Key Sequence
	Self Test (Transmitter)	1, 2, 1, 1
	Sensor Info	1, 4, 4, 2
	Sensor Temperature	1, 1, 4
	Sensor Trim Points	1, 2, 3, 3, 5
	Status	1, 2, 1, 1
✓	Tag	1, 3, 1
✓	Transfer Function (Setting Output Type)	1, 3, 5
	Transmitter Security (Write Protect)	1, 3, 4, 4
	Trim Analog Output	1, 2, 3, 2
✓	Units (Process Variable)	1, 3, 2
	Upper Sensor Trim	1, 2, 3, 3, 3
	Zero Trim	1, 2, 3, 3, 1

Table 2. Device Dashboard - Device Revision 3 and DD Revision 6 Fast Key Sequence

	Function	Fast Key Sequence
✓	Alarm and Saturation Levels	1,7,5
	Burst Mode Control	2,2,4,1
	Burst Option	2,2,4,2
	Custom Display Configuration	2,2,3
✓	Damping	2,2,1,2
	Date	2,2,6,1,4
	Descriptor	2,2,6,1,5
	Digital to Analog Trim (4 - 20 mA Output)	3,4,2,1
	Disable Zero & Span Adjustment	2,2,5,2
	Rerange with Keypad	2,2,2,1
	Loop Test	3,5,1
	Lower Sensor Trim	3,4,1,2
	Message	2,2,6,1,6
✓	Range Values	2,2,2
	Scaled D/A Trim (4 - 20 mA Output)	3,4,2,2

	Function	Fast Key Sequence
	Sensor Temperature/Trend (3051S)	2,2,1,6
✓	Tag	2,2,6,1,1
✓	Transfer Function	2,2,1,3
	Transmitter Security (Write Protect)	2,2,5,1
✓	Units	2,2,1,1
	Upper Sensor Trim	3,4,1,1
	Zero Trim	3,4,1,3

Step 6: Trim the transmitter

Note
Transmitters are shipped fully calibrated per request or by the factory default of full scale (span = upper range limit).

Zero Trim

A zero trim is a single-point adjustment used for compensating mounting position effects. When performing a zero trim, ensure that the equalizing valve is open and all wet legs are filled to the correct level.

There are two methods to compensate for mounting effects:

- Field Communicator
- Transmitter Zero Adjustment Buttons

Select the appropriate method and follow instructions below.

Using the Field Communicator

If zero offset is within 3% of URL, follow the Using the Field Communicator instructions below. This zero trim will affect the 4-20 mA value, the HART PV, and the display value.

Steps

1. Equalize or vent the transmitter and connect Field Communicator.
2. At the menu, input the HART Fast Key sequence (refer to Table 1 or Table 2).
3. Follow the commands to perform a zero trim.

Using the Transmitter Zero Adjustment Buttons

Using the Transmitter Zero Adjustment Buttons, the Lower Range Value (LRV) will be set to the pressure applied to the transmitter. This adjustment will affect the 4-20 mA value only. Perform the following steps to perform a rerange using the zero adjustment buttons.

1. Loosen the certifications label screw and slide the label to expose the zero adjustment buttons.
2. Set the 4 mA point by pressing the zero button for 2 seconds. Verify that the output is 4 mA. The optional LCD will display ZERO PASS.

Zero Adjustment Buttons

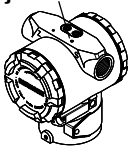

Safety Instrumented Systems

The following section applies to 3051C transmitters used in SIS applications.

Installation

No special installation is required in addition to the standard installation practices outlined in this document. Always ensure a proper seal by installing the electronics housing cover(s) so that metal contacts metal.

The loop must be designed so the terminal voltage does not drop below 10.5 Vdc when the transmitter output is 22.5 mA.

Position the security switch to the “ON” position to prevent accidental or deliberate change of configuration data during normal operation.

Configuration

Use any HART-compliant master to communicate with and verify configuration of the 3051.

User-selected damping will affect the transmitters ability to respond to changes in the applied process. The *damping value + response time* must not exceed the loop requirements.

Notes

1. Transmitter output is not safety-rated during the following: configuration changes, multidrop, loop test. Alternative means should be used to ensure process safety during transmitter configuration and maintenance activities.

2. DCS or safety logic solver must be configured to match transmitter configuration. Figure 11 identifies the two alarm levels available and their operation values. Position the alarm switch to the required HI or LO alarm position.

Figure 11. Alarm Levels

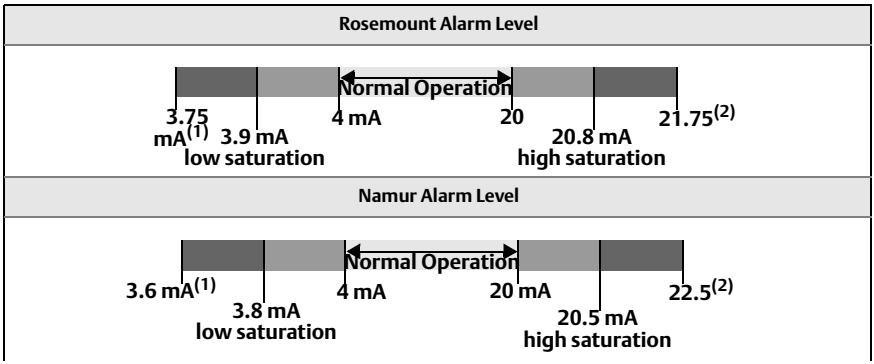

(1) Transmitter Failure, hardware alarm in LO position.

(2) Transmitter Failure, hardware alarm in HI position.

Note

Some detected faults are indicated on the analog output at a level above high alarm regardless of the alarm switch selection.

Operation and maintenance

Proof Test and Inspection

The following proof tests are recommended. Proof test results and corrective actions taken must be documented at *http://rosemount.d1asia.ph/rosemount/safety/ReportAFailure_newweb.asp* in the event that an error is found in the safety functionality.

Use the fast key sequences in Table 1 on page 1-13 or Table 2 on page 1-14 to perform a Loop Test, Analog Output Trim, or Sensor Trim. See the 3051 reference manual (00809-0100-4001) for additional information.

Proof Test 1 [1]

This proof test will detect 59.6% of DU failures not detected by the 3051 automatic diagnostics.

1. Execute the Master Reset command to initiate start-up diagnostics.
2. Enter the milliampere value representing a high alarm state
3. Check the reference meter to verify the mA output corresponds to the entered value.
4. Enter the milliampere value representing a low alarm state
5. Check the reference meter to verify the mA output corresponds to the entered value.

1. *This test will detect approximately 59.6% of possible DU failures in the transmitter.*

Proof-Test 2 [1]

This proof test, when combined with the Five-year Proof-Test, will detect 94.6% of DU failures not detected by the 3051 automatic diagnostics.

1. Execute the Master Reset command to initiate start-up diagnostics.
2. Perform a minimum two point sensor calibration check using the 4-20 mA range points as the calibration points.
3. Check the reference mA meter to verify the mA output corresponds to the pressure input value.
4. If necessary, use one of the "Trim" procedures available in the 3051 reference manual to calibrate.

Note
The user determines the proof-test requirements for impulse piping.

Visual Inspection

Not required.

Special Tools

Not required

Product Repair

All failures detected by the transmitter diagnostics or by the proof-test must be reported. Feedback can be submitted electronically at http://rosemount.d1asia.ph/rosemount/safety/ReportAFailure_newweb.asp.

The 3051 is repairable by major component replacement. Follow the instructions in the 3051 reference manual (document number 00809-0100-4001) for additional information.

1. *This test will detect approximately 94.6% of possible DU failures in the transmitter.*

Reference

Specifications

The 3051 must be operated in accordance to the functional and performance specifications provided in the 3051 reference manual.

Failure Rate Data

The FMEDA report includes failure rates and common cause Beta factor estimates. This report is available at www.emersonprocess.com/rosemount.

3051 Safety Failure Values

Safety accuracy: 0.065%
Safety response time: 100 msec

Product Life

50 years – based on worst case component wear-out mechanisms – not based on wear-out process wetted materials

Product certifications

European Directive Information

The EC declaration of conformity can be found on page 26. The most recent revision can be found at www.emersonprocess.com.

Ordinary Location Certification for Factory Mutual

As standard, the transmitter has been examined and tested to determine that the design meets basic electrical, mechanical, and fire protection requirements by FM, a nationally recognized testing laboratory (NRTL) as accredited by the Federal Occupational Safety and Health Administration (OSHA).

Hazardous locations certifications

North American certifications

FM approvals

E5 Explosion-Proof and Dust Ignition Proof
Certificate No: 0T2H0.AE
Applicable Standards: FM Class 3600 – 1998, FM Class 3615 – 2006, FM Class 3810 – 2005, ANSI/NEMA 250 - 2003
Markings: Explosion-Proof for Class I, Division 1, Groups B, C, and D.
Dust-Ignition-Proof for Class II, Division 1, Groups E, F, G, and Class III, Division 1.
T5 (T_a = -50 °C to +85 °C), Factory Sealed, Enclosure Type 4x.

I5 Intrinsically Safe and Non-Incendive
Certificate No: 1Q4A4.AX
Applicable Standards: FM Class 3600 – 1998, FM Class 3610 – 2010, FM Class 3611 – 2004, FM Class 3810 – 2005
Markings: Intrinsically Safe for use in Class I, Division 1, Groups A, B, C, and D; Class II, Division 1, Groups E, F, and G; Class III, Division 1 when connected per Rosemount drawing 03031-1019 and 00375-1130 (When used with a Field Communicator); Non-incendive for Class I, Division 2, Groups A, B, C, and D.
Temperature Code: T4 (Ta = -50°C to +70°C), T5 (Ta = -50°C to +40°C), Enclosure Type 4x.

Special Conditions for Safe Use (X):

1.) The Model 3051 transmitter housing contains aluminum and is considered a potential risk of ignition by impact or friction. Care must be taken into account during installation and use to prevent impact and friction.

2.) The Model 3051 transmitter with the transient terminal block (Option code T1) will not pass the 500Vrms dielectric strength test and this must be taken into account during installation.

Canadian Standards Association (CSA)

All CSA hazardous approved transmitters are certified per ANSI/ISA 12.27.01-2003.

C6 Explosionproof, Dust-Ignitionproof, Intrinsically Safe and Division 2
Certificate No.: 1053834
Applicable Standards: ANSI/ISA 12.27.01-2003, CSA Std. C22.2 No. 30 -M1986, CSA Std. C22.2 No.142-M1987, CSA Std. C22.2. No.157-92, CSA Std. C22.2 No. 213 - M1987
Markings: Explosionproof for Class I, Division 1, Groups B, C and D.
Dust-Ignitionproof for Class II and Class III, Division 1, Groups E, F and G.
Intrinsically safe for Class I, Division 1, Groups A, B, C and D when connected in accordance with Rosemount drawing 03031-1024. Temperature Code T3C.
Suitable for Class I, Division 2 Groups A, B, C, and D.
Enclosure type 4X, factory sealed. Single Seal (See Drawing 03031-1053).

European certifications

I1 ATEX Intrinsic Safety and Dust
Certificate No.: BAS 97ATEX1089X
Applicable Standards: IEC60079-0:2011, EN60079-11: 2012, EN60079-31: 2009,
Markings:  II 1 GD, Ex ia IIC T4 Ga (–60 ≤ Ta ≤ +70 °C),
Ex ia IIC T5 Ga (–60 ≤ Ta ≤ +40 °C)
Ex ta IIIC T50 °C T_{500} 60 °C Da,
CE 1180

Table 3. Input Parameters

U_i = 30V
I_i = 200 mA
P_i = 0.9W
C_i = 0.012 µF

Special Conditions for Safe Use (X):

1.) The apparatus is not capable of withstanding the 500 V insulation test required by EN60079-11. This must be taken into account when installing the apparatus.

2.) The enclosure may be made of aluminum alloy and given a protective polyurethane paint finish; however care should be taken to protect it from impact or abrasion if located in Zone 0.

N1 ATEX Non-incendive/Type n and Dust
Certification No.: BAS 00ATEX3105X
Applicable Standards: IEC60079-0:2011, EN60079-15:2010, EN60079-31:2009
Markings: ⟨Ex⟩II 3 GD, Ex nA IIC Gc T5 (–40 ≤ Ta ≤ 70 °C),
Ex ta IIIC T50 °C T_{500} 60 °C Da, IP66
CE 1180

Special Conditions for Safe Use (X):

1.) The apparatus is not capable of withstanding the 500 V insulation test required by EN60079-15. This must be taken into account when installing the apparatus.

2.) This device contains a thin wall diaphragm. Installation, maintenance, and use shall take into account the environmental conditions to which the diaphragm will be subjected. The manufacturer's instructions for installation and maintenance shall be followed in detail to assure safety during its expected lifetime. In case of repair, contact the manufacturer for more information on the dimensions of the flameproof joints.

E8 ATEX Flameproof and Dust
Certification No.: KEMA00ATEX2013X, Baseefa11ATEX0275
Applicable Standards: EN60079-0: 2012, EN60079-1: 2007, EN60079-26: 2007, IEC 60079-0:2011 EN60079-31:2009
Markings: ⟨Ex⟩II 1/2 G, Ex d IIC T6 (–50 ≤ Ta ≤ 65 °C) Ga/Gb,
Ex d IIC T5 (–50 ≤ Ta ≤ 80 °C) Ga/Gb,
⟨Ex⟩ II 1D Ex ta IIIC T50 °C T_{500} 60 °C Da
CE1180

Process Temp	Ambient Temp	Temp Class
-50 to 65	-50 to 65	T6
-50 to 80	-50 to 80	T5

Special Conditions for Safe Use (X):

1.) In case of repair, contact the manufacturer for information on the dimensions of the flameproof joints.

2.) This device contains a thin wall diaphragm. Installation, maintenance and use shall take into account the environmental conditions to which the diaphragm will be subjected. The manufacturer's instructions for installation and maintenance shall be followed in detail to assure safety during its expected lifetime.

3.) The capacitance of the wrap around label to the enclosure, 1.6E-9 F, exceeds the limit in Table 9 of IEC 60079-0. The user shall determine suitability for the specific application.

4.) Wait at least 5 minutes after powering down device before opening covers, when a hazardous atmosphere is present.

IECEx certifications

I7 IECEx Intrinsic Safety
Certification No.: IECEx BAS 09.0076X
Applicable Standards: IEC60079-0:2011, IEC 60079-11:2011
Markings: Ex ia IIC T4 Ga (–60 ≤ Ta ≤ +70 °C),
Ex ia IIC T5 Ga (–60 ≤ Ta ≤ +40 °C)

Table 4. Input Parameters

U_i = 30 V
I_i = 200 mA
P_i = 0.9 W
C_i = 0.012 µF
L_i = 0 µH

Special Conditions for Safe Use (X):

1.) If the apparatus is fitted with an optional 90V transient suppressor, it is not capable of withstanding the 500V insulation test required by IEC 60079-11. This must be taken into account when installing the apparatus.

2.) The enclosure may be made of aluminum alloy and given a protective polyurethane paint finish; however, care should be taken to protect it from impact or abrasion if located in Zone 0.

E7 IECEx Flame-proof
Certification No.: IECEx KEM 09.0034X
Applicable Standards: IEC60079-0:2011, IEC60079-1:2007-04, IEC60079-26:2006,
Markings: Ex d IIC T5...T6 Ga/Gb, T5 (-50 °C ≤ Ta ≤ 80 °C)/T6 (-50 °C ≤ Ta ≤ 65 °C)

Process Temp	Ambient Temp	Temp Class
-50 to 65	-50 to 65	T6
-50 to 80	-50 to 80	T5

Special Conditions for Safe Use (X):

1.) This device contains a thin wall diaphragm. Installation, maintenance, and use shall take into account the environmental conditions to which the diaphragm will be subjected. The manufacturer's instructions for installation and maintenance shall be followed in detail to assure safety during its expected lifetime.

2.) For information on the dimensions of the flameproof joints the manufacturer shall be contacted.

3.) The capacitance of the wrap around label to the enclosure, 1.6E-9 F, exceeds the limit in Table 9 of IEC 60079-0. The user shall determine suitability for the specific application.

4.) Wait at least 5 minutes after powering down device before opening covers, when a hazardous atmosphere is present.

N7 IECEx Type 'n'
Certification No.: IECEx BAS 09.0077X
Applicable Standards: IEC60079-0:2011, IEC60079-15:2010
Markings: Ex nA IIC T5 Gc (-40 ≤ Ta ≤ 70 °C)

Special Conditions for Safe Use (X):

The apparatus is not capable of withstanding the 500V insulation test required by IEC 60079-15. This must be taken into account when installing the apparatus.

TIIS Certifications

E4 TIIS Flame-Proof
Ex d IIC T6

Certificate	Description
TC15850	3051C/D/1 4–20 mA HART — no meter
TC15851	3051C/D/1 4–20 mA HART — with meter
TC15854	3051T/G/1 4–20 mA HART, SST, Silicon — no meter
TC15855	3051T/G/1 4–20 mA HART, Alloy C-276, Silicon — no meter
TC15856	3051T/G/1 4–20 mA HART, SST, Silicon — with meter
TC15857	3051T/G/1 4–20 mA HART, Alloy C-276, Silicon — with meter

I4 TIIS Intrinsic Safety
Certification No.: TC16406
Markings: Ex ia IIC T4

Inmetro certifications

E2 Flameproof
Certificate No: CEPEL 97.0073X (Mfg USA and Singapore)
Certificate No: CEPEL 07.1383X (Mfg Brazil)
Applicable Standards: IEC60079-0:2008, IEC60079-1:2009, IEC60079-26:2008, IEC60529:2009
Markings: Ex d IIC T6 Ga/Gb (-50°C ≤ Ta ≤ +65°C)
Ex d IIC T5 Ga/Gb (-50°C ≤ Ta ≤ +80°C)
IP66W

I2 Intrinsic Safety
Certificate No.: CEPEL 97.0072X (Mfg USA and Singapore)
Certificate No.: CEPEL 07.1412X (Mfg Brazil)
Applicable Standards: IEC60079-0:2008, IEC60079-11:2009, IEC60079-26:2008, IEC60529:2009
Markings: Ex ia IIC T4 Ga (–20 ≤ Ta ≤ +70 °C),
Ex ia IIC T5 Ga (–20 ≤ Ta ≤ +40 °C)
IP66W

Table 5. Input Parameters

U_i = 30 V
I_i = 200 mA
P_i = 0.9 W
C_i = 0.012 µF
L_i = Desprezivel

Special Conditions for Safe Use (X):

See Certificate.

China certifications

E3 Flameproof and Dust
NEPSI Certificate No.: GYJ091065X
Applicable Standards: GB3836.1-2000, GB3836.4-2000,GB4208-1993, GB12476-2000
Markings: Ex d II C T5/T6, -50°~+80°C (T5), -50°~+65°C (T6), DIP A21 TA T90°C, IP66

Special Conditions for Safe Use (X):

Refer to Appendix B of Rosemount 3051 reference manual (00809-0100-4001).

I3 Intrinsic Safety and Dust
NEPSI Certificate No: GYJ091066X
Applicable Standards: GB3836.1-2000, GB3836.2-2000,GB4208-1993, GB12476-2000
Markings: Ex ia II C T4/T5, -60°~+40°C (T5), -60°~+70°C (T4), DIP A21 TA T80°C

Special Conditions for Safe Use (X):

Refer to Appendix B of Rosemount 3051 reference manual (00809-0100-4001).

N3 China Type n - Non-Sparking
NEPSI Certificate No.: GYJ101111X
Applicable Standards: GB3836.1-2000, GB3836.8-2003
Markings: Ex nA nL IIC T5 (-40 °C ≤ TA ≤ 70 °C)

Special Conditions for Safe Use (X):

Refer to Appendix B of Rosemount 3051 reference manual (00809-0100-4001).

Combinations of Certifications

Stainless steel certification tag is provided when optional approval is specified. Once a device labeled with multiple approval types is installed, it should not be reinstalled using any other approval types. Permanently mark the approval label to distinguish it from unused approval types.

K5 – E5, I5
K6 – C6, E8, I1
K7 – E7, I7, N7
K8 – E8, I1, N1
KB – E5, I5, E1, I1
KD – E5, I5, C6, I1

ROSEMOUNT

CE

EC Declaration of Conformity

No: RMD 1017 Rev. R

We,

Rosemount Inc.
8200 Market Boulevard
Chanhassen, MN 55317-6985

declare under our sole responsibility that the product,

Model 3051 Pressure Transmitters

manufactured by,

Rosemount Inc. **12001 Technology Drive** **Eden Prairie, MN 55344-3695** **USA**	*and*	**8200 Market Boulevard** **Chanhassen, MN 55317-9687** **USA**

to which this declaration relates, is in conformity with the provisions of the European Community Directives, including the latest amendments, as shown in the attached schedule.

Assumption of conformity is based on the application of the harmonized standards and, when applicable or required, a European Community notified body certification, as shown in the attached schedule.

(signature)

Director of Global Quality
(function name - printed)

Kelly Klein
(name - printed)

28 Jan 2013
(date of issue)

File ID: 3051_CE Marking *Page 1 of 4* 3051_RMD1017_R.docx

ROSEMOUNT

CE

EC Declaration of Conformity
No: RMD 1017 Rev. R

EMC Directive (2004/108/EC)

All Models 3051 Pressure Transmitters
EN 61326-1:2006
EN 61326-2-3:2006

PED Directive (97/23/EC)

Models 3051CA4; 3051CG2, 3, 4, 5; 3051CD2, 3, 4, 5; 3051HG2, 3, 4, 5; 3051HD2, 3, 4, 5 ***(also with P9 option)***
Pressure Transmitters
QS Certificate of Assessment - EC Certificate No. 59552-2009-CE-HOU-DNV
Module H Conformity Assessment
Other Standards Used: ANSI/ISA61010-1:2004, EN60770-1:1999

All other model 3051 Pressure Transmitters
Sound Engineering Practice

Transmitter Attachments: Diaphragm Seal - Process Flange - Manifold
Sound Engineering Practice

Model 3051CFx Flowmeter Transmitters (All 3051CFx models are SEP except as noted in the table below)
QS Certificate of Assessment - CE-41-PED-H1-RMT-001-04-USA
Module H Conformity Assessment
Evaluation standards: ASME B31.3:2010

Model/Range	PED Category	
	Group 1 Fluid	Group 2 Fluid
3051CFA: 1500# & 2500# All Lines	II	SEP
3051CFA: Sensor Size 2 150# 6"to 24" Line	I	SEP
3051CFA: Sensor Size 2 300# 6"to 24" Line	II	I
3051CFA: Sensor Size 2 600# 6"to 16" Line	II	I
3051CFA: Sensor Size 2 600# 18"to 24" Line	III	II
3051CFA: Sensor Size 3 150# 12"to 44" Line	II	I
3051CFA: Sensor Size 3 150# 46"to 72" Line	III	II
3051CFA: Sensor Size 3 300# 12" to 72" Line	III	II
3051CFA: Sensor Size 3 600# 12"to 48" Line	III	II
3051CFA: Sensor Size 3 600# 60" to 72" Line	IV	III
3051CFP: 150#, 300#, 600# 1-1/2"	I	SEP
3051CFP: 300# & 600# 1-1/2"	II	I
3051CFP: 1-1/2" Threaded & Welded	II	I

ROSEMOUNT

CE

EC Declaration of Conformity
No: RMD 1017 Rev. R

ATEX Directive (94/9/EC)

Model 3051 Pressure Transmitter

BAS97ATEX1089X Intrinsic Safety and Dust Certificate
Equipment Group II Category 1 GD
Ex ia IIC T5 or T4 Ga
T5 (-60°C ≤ Ta ≤ +40°C), T4 (-60°C ≤ Ta ≤ +70°C);
Ex ta IIIC T50°C T_{500}60°C Da
Harmonized Standards Used:
EN60079-31:2009, EN60079-11:2012
Other Standards Used:
IEC60079-0:2011

BAS00ATEX3105X Type n and Dust Certificate
Equipment Group II Category 3 GD
Ex nA IIC T5 Gc (-40°C ≤ Ta ≤ +70°C);
Ex ta IIIC T50°C T_{500}60°C Da
Harmonized Standards Used:
EN60079-31:2009, EN60079-15:2010
Other Standards Used:
IEC60079-0:2011

Baseefa11ATEX0275 Dust Certificate
Equipment Group II Category 1D
Ex ta IIIC T50°C T_{500}60°C Da
Harmonized Standards Used:
EN60079-31:2009
Other Standards Used:
IEC60079-0:2011

KEMA00ATEX2013X Flameproof
Equipment Group II Category 1/2 G
Ex d IIC T6 or T5 Ga/Gb
T6(-50°C ≤ Ta ≤ +65°C); T5(-50°C ≤ Ta ≤ +80°C);
Harmonized Standards Used:
EN60079-1:2007, EN60079-26:2007
Other Standards Used:
EN60079-0:2012

File ID: 3051_CE Marking *Page 3 of 4* 3051_RMD1017_R.docx

ROSEMOUNT

EC Declaration of Conformity
No: RMD 1017 Rev. R

PED Notified Body

Model 3051 Pressure Transmitters

Det Norske Veritas (DNV) [Notified Body Number: 0575]
Veritasveien 1, N-1322
Hovik, Norway

3051CFx Series Flowmeter Transmitters

Bureau Veritas UK Limited [Notified Body Number: 0041]
Parklands 825A, Wilmslow Road, Didsbury
Manchester M20 2RE
United Kingdom

ATEX Notified Bodies for EC Type Examination Certificate

DEKRA [Notified Body Number: 0344]
Utrechtseweg 310, 6812 AR Arnhem
P.O. Box 5185, 6802 ED Arnhem
The Netherlands
Postbank 6794687

Baseefa. [Notified Body Number: 1180]
Rockhead Business Park
Staden Lane
Buxton, Derbyshire
SK17 9RZ United Kingdom

ATEX Notified Body for Quality Assurance

Baseefa. [Notified Body Number: 1180]
Rockhead Business Park
Staden Lane
Buxton, Derbyshire
SK17 9RZ United Kingdom



Quick Start Guide
00825-0100-4001, rev. JA
March 2013

Rosemount Inc.
8200 Market Boulevard
Chanhassen, MN USA 55317
T (US) (800) 999-9307
T (Intnl) (952) 906-8888
F (952) 906-8889

Emerson Process Management Asia Pacific Private Limited
1 Pandan Crescent
Singapore 128461
T (65) 6777 8211
F (65) 6777 0947/65 6777 0743

Emerson Process Management GmbH & Co. OHG
Argelsrieder Feld 3
82234 Wessling Germany
T 49 (8153) 9390, F49 (8153) 939172

Beijing Rosemount Far East Instrument Co., Limited
No. 6 North Street, Hepingli,
Dong Cheng District
Beijing 100013, China
T (86) (10) 6428 2233
F (86) (10) 6422 8586

Emerson Process Management Latin America
1300 Concord Terrace, Suite 400
Sunrise Florida 33323 USA
Tel + 1 954 846 5030

www.rosemount.com

© 2013 Rosemount Inc. All rights reserved. All marks property of owner.
The Emerson logo is a trade mark and service mark of Emerson Electric Co
Rosemount and the Rosemount logotype are registered trademarks of Rosemount Inc.

ROSEMOUNT

EMERSON.
Process Management

Rosemount 3051 Pressure Transmitter

THE PROVEN INDUSTRY LEADER IN PRESSURE MEASUREMENT

- *Best-in-Class performance with 0.04% reference accuracy*
- *Coplanar™ platform enables integrated pressure, flow and level solutions*
- *Power Advisory Diagnostics provide predictive visibility to the health of your entire electrical loop*
- *Local Operator Interface (LOI) offers easy to use configuration capabilities at the transmitter*
- *Selectable HART™ Revision prepares your plant for the latest HART capabilities while ensuring seamless integration with today's systems*
- *SIL2 safety certification to IEC 61508 is available with the full HART offering to simplify compliance*
- *Over 20 years of backwards compatibility allows you to invest in the latest features without adding complexity to your plant*



Contents

Ordering Information
- Rosemount 3051C Coplanar Pressure Transmitter . . . . . page 3
- Rosemount 3051T In-Line Pressure Transmitter . . . . . page 10
- Rosemount 3051CF Flowmeter Series . . . . . page 15
- Rosemount 3051L Level Transmitter . . . . . page 32

Specifications . . . . . page 38
Product Certifications . . . . . page 47
Standard 3051 Dimensional Drawings . . . . . page 53
Enhanced 3051 Dimensional Drawings . . . . . page 64

Setting the Standard for Pressure Measurement



Proven best-in-class performance, reliability and safety

- Over 7 million installed
- Meet your application needs with extensive offering
- Real world total performance of ±0.12%
- Reference accuracy of ±0.04%



Flow



Pressure

Maximize Installation Flexibility with Coplanar Platform

- Improve reliability and performance with integrated DP Flowmeters, DP Level and manifolds
- Easy installation with all solutions fully assembled, leak-tested and calibrated
- Meet your application needs with an unsurpassed offering



Level



Unlock the Value of Devices with the Smart Wireless THUM™ Adapter

- Gain access to field intelligence and improve quality, safety, availability, operations and maintenance costs
- Remotely manage devices and monitor health
- Enable new wireless measurement points
- Utilize existing loop power



Innovative, Integrated DP Flowmeters

- Fully assembled, configured, and leak tested for out-of-the-box installation
- Reduce straight pipe requirements, lower permanent pressure loss and achieve accurate measurement in small line sizes
- Up to 1.65% volumetric flow accuracy at 8:1 turndown



Proven, Reliable and Innovative DP Level Technologies

- Connect to virtually any process with a comprehensive offering of process connections, fill fluids, direct mount or capillary connections and materials
- Quantify and optimize total system performance with QZ option
- Operate at higher temperature and in vacuum applications
- Optimize level measurement with cost efficient Tuned-System™ Assemblies



Instrument Manifolds – Quality, Convenient, and Easy

- Designed and engineered for optimal performance with Rosemount transmitters
- Save installation time and money with factory assembly
- Offers a variety of styles, materials and configurations

Rosemount 3051C Coplanar Pressure Transmitter



3051C Coplanar Pressure Transmitter

This ordering table contains the following Rosemount 3051C configurations:

Configuration	Transmitter Output Code
4-20 mA HART -3051 -Enhanced 3051(1)	A
FOUNDATION™ fieldbus	F
PROFIBUS® PA	W

(1) The enhanced 4-20 mA HART device can be ordered with Transmitter Output option code A plus any of the following new option codes: DA0, M4, QT, DZ, CR, CS, CT, HR5, HR7.

See Specifications and Options for more details on each configuration.

Additional Information
Specifications: page 38
Certifications: page 47
Dimensional Drawings: page 53

Table 1. 3051C Coplanar Pressure Transmitters Ordering Information

★ The Standard offering represents the most common options. The starred options (★) should be selected for best delivery.
The Expanded offering is subject to additional delivery lead time.

Model	Transmitter Type			
3051C	Coplanar Pressure Transmitter			
Measurement Type				
Standard				**Standard**
D	Differential			★
G	Gage			★
Expanded				
A	Absolute			
Pressure Range				
	3051CD	**3051CG**	**3051CA**	
Standard				**Standard**
1	–25 to 25 inH_2O (–62.2 to 62.2 mbar)	–25 to 25 inH_2O (–62,1 to 62.2 mbar)	0 to 30 psia (0 to 2.1 bar)	★
2	–250 to 250 inH2O (–623 to 623 mbar)	–250 to 250 inH_2O (–621 to 623 mbar)	0 to 150 psia (0 to 10.3 bar)	★
3	–1000 to 1000 inH_2O (–2.5 to 2.5 bar)	–393 to 1000 inH_2O (–0.98 to 2.5 bar)	0 to 800 psia (0 to 55.2 bar)	★
4	–300 to 300 psi (–20.7 to 20.7 bar)	–14.2 to 300 psi (–0.98 to 20.7 bar)	0 to 4000 psia (0 to 275.8 bar)	★
5	–2000 to 2000 psi (–137.9 to137.9 bar)	–14.2 to 2000 psi (–0.98 to 137.9 bar)	Not Applicable	★
Expanded				
0(1)	–3 to 3 inH_2O (–7.5 to 7.5 mbar)	Not Applicable	Not Applicable	
Transmitter Output				
Standard				**Standard**
A(2)	4–20 mA with Digital Signal Based on HART Protocol			★
F	FOUNDATION fieldbus Protocol			★
W(3)	PROFIBUS PA Protocol			★

Table 1. 3051C Coplanar Pressure Transmitters Ordering Information

★ The Standard offering represents the most common options. The starred options (★) should be selected for best delivery.
The Expanded offering is subject to additional delivery lead time.

Materials of Construction				
	Process Flange Type	**Flange Material**	**Drain/Vent**	
Standard				**Standard**
2	Coplanar	SST	SST	★
3(4)	Coplanar	Cast C-276	Alloy C-276	★
4	Coplanar	Cast Alloy 400	Alloy 400/K-500	★
5	Coplanar	Plated CS	SST	★
7(4)	Coplanar	SST	Alloy C-276	★
8(4)	Coplanar	Plated CS	Alloy C-276	★
0	Alternate Process Connection			★
Isolating Diaphragm				
Standard				**Standard**
2(4)	316L SST			★
3(4)	Alloy C-276			★
Expanded				
4	Alloy 400			
5	Tantalum (Available on 3051CD and CG, Ranges 2–5 only. Not available on 3051CA)			
6	Gold-plated Alloy 400 (Use in combination with O-ring Option Code B.)			
7	Gold-plated SST			
O-ring				
Standard				**Standard**
A	Glass-filled PTFE			★
B	Graphite-filled PTFE			★
Sensor Fill Fluid				
Standard				**Standard**
1	Silicone			★
2	Inert (Differential and Gage only)			★
Housing Material			**Conduit Entry Size**	
Standard				**Standard**
A	Aluminum		½–14 NPT	★
B	Aluminum		M20 × 1.5	★
J	SST		½–14 NPT	★
K	SST		M20 × 1.5	★
Expanded				
D	Aluminum		G½	
M	SST		G½	

Options (Include with selected model number)

Plantweb Control Functionality		
Standard		**Standard**
A01	FOUNDATION fieldbus Advanced Control Function Block Suite	★
Plantweb Diagnostic Functionality		
Standard		**Standard**
DA0(5)(6)	Power Advisory HART Diagnostic	★
D01	FOUNDATION fieldbus Diagnostics Suite	★

Table 1. 3051C Coplanar Pressure Transmitters Ordering Information

★ The Standard offering represents the most common options. The starred options (★) should be selected for best delivery.
The Expanded offering is subject to additional delivery lead time.

Alternate Flange[7]		
Standard		**Standard**
H2	Traditional Flange, 316 SST, SST Drain/Vent	★
H3[4]	Traditional Flange, Alloy C, Alloy C-276 Drain/Vent	★
H4	Traditional Flange, Cast Alloy 400, Alloy 400/K-500 Drain/Vent	★
H7[4]	Traditional Flange, 316 SST, Alloy C-276 Drain/Vent	★
HJ	DIN Compliant Traditional Flange, SST, 1/16 in. Adapter/Manifold Bolting	★
FA	Level Flange, SST, 2 in., ANSI Class 150, Vertical Mount	★
FB	Level Flange, SST, 2 in., ANSI Class 300, Vertical Mount	★
FC	Level Flange, SST, 3 in., ANSI Class 150, Vertical Mount	★
FD	Level Flange, SST, 3 in., ANSI Class 300, Vertical Mount	★
FP	DIN Level Flange, SST, DN 50, PN 40, Vertical Mount	★
FQ	DIN Level Flange, SST, DN 80, PN 40, Vertical Mount	★
Expanded		
HK[8]	DIN Compliant Traditional Flange, SST, 10 mm Adapter/Manifold Bolting	
HL	DIN Compliant Traditional Flange, SST, 12mm Adapter/Manifold Bolting (Not available on 3051CD0)	
Manifold Assembly[8][9]		
Standard		**Standard**
S5	Assemble to Rosemount 305 Integral Manifold	★
S6	Assemble to Rosemount 304 Manifold or Connection System	★
Integral Mount Primary Element[8][9]		
Standard		**Standard**
S3	Assemble to Rosemount 405 Compact Orifice Plate	★
S4[10]	Assemble to Rosemount Annubar or Rosemount 1195 Integral Orifice	★
Seal Assemblies[9]		
Standard		**Standard**
S1[11]	Assemble to one Rosemount 1199 seal	★
S2[12]	Assemble to two Rosemount 1199 seals	★
S7	One Seal, All-Welded System (Capillary Connection Type)	
S8	Two Seals, All-Welded System (Capillary Connection Type)	
S9	Two Seals, All-Welded System (One Direct Mount and One Capillary Connection Type)	
S0	One Seal, All-Welded System (Direct Mount Connection Type)	
Mounting Bracket[13]		
Standard		**Standard**
B1	Traditional Flange Bracket for 2-in. Pipe Mounting, CS Bolts	★
B2	Traditional Flange Bracket for Panel Mounting, CS Bolts	★
B3	Traditional Flange Flat Bracket for 2-in. Pipe Mounting, CS Bolts	★
B4	Coplanar Flange Bracket for 2-in. Pipe or Panel Mounting, all SST	★
B7	B1 Bracket with Series 300 SST Bolts	★
B8	B2 Bracket with Series 300 SST Bolts	★
B9	B3 Bracket with Series 300 SST Bolts	★
BA	SST B1 Bracket with Series 300 SST Bolts	★
BC	SST B3 Bracket with Series 300 SST Bolts	★

Table 1. 3051C Coplanar Pressure Transmitters Ordering Information

★ The Standard offering represents the most common options. The starred options (★) should be selected for best delivery.
The Expanded offering is subject to additional delivery lead time.

Product Certifications		
Standard		**Standard**
C6	CSA Explosion-proof, Dust Ignition-proof, Intrinsically Safe, and Division 2	★
E2	INMETRO Flameproof	★
E3	China Flameproof	★
E4[14]	TIIS Flame-proof	★
E5	FM Explosion-proof, Dust Ignition-Proof	★
E7	IECEx Flameproof, Dust Ignition-proof	★
E8	ATEX Flameproof and Dust Certification	★
I1	ATEX Intrinsic Safety and Dust	★
I2	INMETRO Intrinsic Safety	★
I3	China Intrinsic Safety	★
I4[15]	TIIS Intrinsic Safety	★
I5	FM Intrinsically Safe, Division 2	★
I7	IECEx Intrinsic Safety	★
IA	ATEX FISCO Intrinsic Safety; for FOUNDATION fieldbus protocol only	★
IE	FM FISCO Intrinsically Safe; for FOUNDATION fieldbus protocol only	★
K2	INMETRO Flameproof, Instrinsic Safety	★
K5	FM Explosion-proof, Dust Ignition-Proof, Intrinsically Safe, and Division 2	★
K6	CSA and ATEX Explosion-proof, Intrinsically Safe, and Division 2 (combination of C6 and K8)	★
K7	IECEx Flame-proof, Dust Ignition-proof, Intrinsic Safety, and Type n (combination of I7, N7, and E7)	★
K8	ATEX Flameproof, Intrinsic Safety, Type n, Dust (combination of E8, I1 and N1)	★
KB	FM and CSA Explosion-proof, Dust Ignition Proof, Intrinsically Safe, and Division 2 (combination of K5 and C6)	★
KD	FM, CSA, and ATEX Explosion-proof, Intrinsically Safe (combination of K5, C6, I1, and E8)	★
N1	ATEX Type n Certification and Dust	★
N3	China Type n	★
N7	IECEx Type n Certification	★
Drinking Water Approval		
Standard		**Standard**
DW[16]	NSF drinking water approval	★
Shipboard Approvals		
Standard		**Standard**
SBS	American Bureau of Shipping	★
Custody Transfer		
Standard		**Standard**
C5[5]	Measurement Canada Accuracy Approval *(Limited availability depending on transmitter type and range. Contact an Emerson Process Management representative)*	★
Bolting Material		
Standard		**Standard**
L4	Austenitic 316 SST Bolts	★
L5	ASTM A 193, Grade B7M Bolts	★
L6	Alloy K-500 Bolts	★
Display and Interface Options		
Standard		**Standard**
M4[17]	LCD Display with Local Operator Interface	★
M5	LCD Display	★

Table 1. 3051C Coplanar Pressure Transmitters Ordering Information

★ The Standard offering represents the most common options. The starred options (★) should be selected for best delivery.
The Expanded offering is subject to additional delivery lead time.

Calibration Certificate		
Standard		**Standard**
Q4	Calibration Certificate	★
QG	Calibration Certificate and GOST Verification Certificate	★
QP	Calibration certification and tamper evident seal	★
Material Traceability Certification		
Standard		**Standard**
Q8	Material Traceability Certification per EN 10204 3.1.B	★
Quality Certification for Safety		
Standard		**Standard**
QS[18]	Prior-use certificate of FMEDA data	★
QT[5][6]	Safety certified to IEC 61508 with certificate of FMEDA	★
Configuration Buttons		
Standard		**Standard**
D4[5]	Analog Zero and Span	★
DZ[5]	Digital Zero Trim	★
Transient Protection		
Standard		**Standard**
T1[19]	Transient Protection Terminal Block	★
Software Configuration		
Standard		**Standard**
C1	Custom Software Configuration (Completed CDS 00806-0100-4001 required with order)	★
Gage Pressure Calibration		
Standard		**Standard**
C3	Gage Calibration (Model 3051CA4 only)	★
Alarm Levels		
Standard		**Standard**
C4[5][19]	Analog Output Levels Compliant with NAMUR Recommendation NE 43, Alarm High	★
CN[5][19]	Analog Output Levels Compliant with NAMUR Recommendation NE 43, Alarm Low	★
CR[5][6]	Custom alarm and saturation signal levels, high alarm (requires C1 and Configuration Data Sheet)	★
CS[5][6]	Custom alarm and saturation signal levels, low alarm (requires C1 and Configuration Data Sheet)	★
CT[5][6]	Low alarm (standard Rosemount alarm and saturation levels)	★
Pressure Testing		
Expanded		
P1	Hydrostatic Testing with Certificate	
Cleaning Process Area		
Expanded		
P2	Cleaning for Special Service	
P3	Cleaning for <1 PPM Chlorine/Fluorine	
Pressure Calibration		
Expanded		
P4	Calibrate at Line Pressure *(Specify Q48 on order for corresponding certificate)*	
High Accuracy		
Standard		**Standard**
P8[20]	0.04% Accuracy to 5:1 turndown (Range 2-4)	★

Table 1. 3051C Coplanar Pressure Transmitters Ordering Information

★ The Standard offering represents the most common options. The starred options (★) should be selected for best delivery.
The Expanded offering is subject to additional delivery lead time.

Flange Adapters		
Standard		**Standard**
DF(21)	1/2 -14 NPT flange adapter(s)	★
Vent/Drain Valves		
Expanded		
D7	Coplanar Flange Without Drain/Vent Ports	
Conduit Plug		
Standard		**Standard**
DO(22)	316 SST Conduit Plug	★
RC1/4 RC1/2 Process Connection		
Expanded		
D9(23)	RC ¼ Flange with RC ½ Flange Adapter - SST	
Max Static Line Pressure		
Standard		**Standard**
P9	4500 psig (310 bar) Static Pressure Limit (3051CD Ranges 2–5 only)	★
Ground Screw		
Standard		**Standard**
V5(24)	External Ground Screw Assembly	★
Surface Finish		
Standard		**Standard**
Q16	Surface finish certification for sanitary remote seals	★
Toolkit Total System Performance Reports		
Standard		**Standard**
QZ	Remote Seal System Performance Calculation Report	★
Conduit Electrical Connector		
Standard		**Standard**
GE	M12, 4-pin, Male Connector (eurofast®)	★
GM	A size Mini, 4-pin, Male Connector (minifast®)	★
HART Revision Configuration		
Standard		**Standard**
HR5(5)(6)(25)	Configured for HART Revision 5	★
HR7(5)(6) (26)	Configured for HART Revision 7	★
Typical Model Number: 3051CD 2 A 2 2 A 1 A B4		

(1) 3051CD0 is available only with Output Code A, Process Flange Code 0 (Alternate Flange H2, H7, HJ, or HK), Isolating Diaphragm Code 2, O-ring Code A, and Bolting Option L4.

(2) HART Revision 5 is the default HART output. The Enhanced 3051 can be factory or field configured to HART Revision 7. To order HART Revision 7 factory configured, add option code HR7.

(3) Option code M4 - LCD Display with Local Operator Interface required for local addressing and configuration.

(4) Materials of Construction comply with recommendations per NACE MR0175/ISO 15156 for sour oil field production environments. Environmental limits apply to certain materials. Consult latest standard for details. Selected materials also conform to NACE MR0103 for sour refining environments.

(5) Only available with HART 4-20 mA output (output code A).

(6) Select Configuration Buttons (option code D4 or DZ) or Local Operator Interface (option code M4) if local configuration buttons are required.

(7) Requires 0 code in Materials of Construction for Alternate Process Connection.

(8) Not valid with optional code P9 for 4500 psi Static Pressure.

(9) "Assemble-to" items are specified separately and require a completed model number.

(10) Process Flange limited to Coplanar (codes 2, 3, 5, 7, 8) or Traditional (H2, H3, H7).

(11) Not valid with optional code D9 for RC1/2 Adaptors.

(12) Not valid for optional codes DF and D9 for Adaptors.

(13) Panel mounting bolts are not supplied.

(14) Available only with output codes A - 4-20 mA HART and F - FOUNDATION fieldbus.

(15) Available only with 3051CD and 3051CG and output code A - 4-20 mA HART.

(16) Not available with Alloy C-276 isolator (3 code), tantalum isolator (5 code), all cast C-276 flanges, all plated CS flanges, all DIN flanges, all Level flanges, assemble-to manifolds (S5 and S6 codes), assemble-to seals (S1 and S2 codes), assemble-to primary elements (S3 and S4 codes), surface finish certification (Q16 code), and remote seal system report (QZ code).

(17) Not available with FOUNDATION fieldbus (output code F).

(18) Only Available with standard 3051 4-20mA HART.

(19) NAMUR-Compliant operation is pre-set at the factory and cannot be changed to standard operation in the field for the standard 3051.

(20) Only available with Standard 3051. See specification section for more information.

(21) Not valid with Alternate Process Connection options S3, S4, S5, and S6.

(22) Transmitter is shipped with a 316 SST Conduit plug (uninstalled) in place of standard carbon steel conduit plug.

(23) Not available with Alternate Process Connection; DIN Flanges and Level Flanges.

(24) The V5 options is not needed with the T1 option; external ground screw assembly is included with the T1 option.

(25) Configures the HART output to HART Revision 5. The device can be field configured to HART Revision 7 if needed.

(26) Configures the HART output to HART Revision 7. The device can be field configured to HART Revision 5 if needed.

Product Data Sheet
00813-0100-4001, Rev MA
May 2012

Rosemount 3051T In-Line Pressure Transmitter



3051T In-Line Pressure Transmitter

This ordering table contains the following Rosemount 3051T configurations:

Configuration	Transmitter Output Code
4-20 mA HART® -3051 -Enhanced 3051(1)	A
FOUNDATION™ fieldbus	F
PROFIBUS PA	W

(1) The enhanced 4-20 mA HART device can be ordered with Transmitter Output option code A plus any of the following new option codes: DA0, M4, QT, DZ, CR, CS, CT, HR5, HR7.

See Specifications and Options for more details on each configuration.

Additional Information

Specifications: page 38
Certifications: page 47
Dimensional Drawings: page 53

Table 2. 3051T In-Line Pressure Transmitter Ordering Information

★ The Standard offering represents the most common options. The starred options (★) should be selected for best delivery.
The Expanded offering is subject to additional delivery lead time.

Model	Transmitter Type		
3051T	In-Line Pressure Transmitter		
Pressure Type			
Standard			**Standard**
G	Gage		★
A	Absolute		★
Pressure Range			
	3051TG(1)	**3051TA**	
Standard			**Standard**
1	-14.7 to 30 psi (-1.0 to 2.1 bar)	0 to 30 psia (0 to 2.1 bar)	★
2	-14.7 to 150 psi (-1.0 to 10.3 bar)	0 to 150 psia (0 to 10.3 bar)	★
3	-14.7 to 800 psi (-1.0 to 55 bar)	0 to 800 psia (0 to 55 bar)	★
4	-14.7 to 4000 psi (-1.0 to 276 bar)	0 to 4000 psia (0 to 276 bar)	★
5	-14.7 to 10000 psi (-1.0 to 689 bar)	0 to 10000 psia (0 to 689 bar)	★
Transmitter Output			
Standard			**Standard**
A(2)	4–20 mA with Digital Signal Based on HART Protocol		★
F	FOUNDATION fieldbus Protocol		★
W(3)	PROFIBUS PA Protocol		★
Process Connection Style			
Standard			**Standard**
2B	1/2–14 NPT Female		★
2C	G½ A DIN 16288 Male (Available in SST for Range 1–4 only)		★
Expanded			
2F	Coned and Threaded, Compatible with Autoclave Type F-250-C (Range 5 only)		
61	Non-threaded Instrument flange (Range 1-4 only)		
Isolating Diaphragm		**Process Connection Wetted Parts Material**	
Standard			**Standard**
2(4)	316L SST	316L SST	★
3(4)	Alloy C-276	Alloy C-276	★

Table 2. 3051T In-Line Pressure Transmitter Ordering Information

★ The Standard offering represents the most common options. The starred options (★) should be selected for best delivery.
The Expanded offering is subject to additional delivery lead time.

Sensor Fill Fluid			
Standard			**Standard**
1	Silicone		★
2	Inert		★
Housing Material		**Conduit Entry Size**	
Standard			**Standard**
A	Aluminum	½–14 NPT	★
B	Aluminum	M20 × 1.5	★
J	SST	½–14 NPT	★
K	SST	M20 × 1.5	★
Expanded			
D	Aluminum	G½	
M	SST	G½	

Options (Include with selected model number)

PlantWeb Control Functionality		
Standard		**Standard**
A01	Advanced Control Function Block Suite	★
PlantWeb Diagnostic Functionality		
Standard		**Standard**
DA0[5][8]	Power Advisory HART Diagnostic	★
D01	FOUNDATION fieldbus Diagnostics Suite	★
Integral Assembly		
Standard		**Standard**
S5[6]	Assemble to Rosemount 306 Integral Manifold	★
Diaphragm Seal Assemblies		
Standard		**Standard**
S1[6]	Assemble to one Rosemount 1199 seal	★
Mounting Bracket[7]		
Standard		**Standard**
B4	Bracket for 2-in. Pipe or Panel Mounting, All SST	★
Product Certifications		
Standard		**Standard**
C6	CSA Explosion-proof, Dust Ignition-proof, Intrinsically Safe, and Division 2	★
E2	INMETRO Flameproof	★
E3	China Flameproof	★
E4	TIIS Flameproof	★
E5	FM Explosion-proof, Dust Ignition-proof	★
E7	IECEx Flameproof, Dust Ignition-proof	★
E8	ATEX Flameproof and Dust Certification	★
I1	ATEX Intrinsic Safety and Dust	★
I2	INMETRO Intrinsic Safety	★
I3	China Intrinsic Safety	★
I5	FM Intrinsically Safe, Division 2	★
I7	IECEx Intrinsic Safety	★
IA	ATEX Intrinsic Safety for FISCO; for FOUNDATION fieldbus protocol only	★

Table 2. 3051T In-Line Pressure Transmitter Ordering Information

★ The Standard offering represents the most common options. The starred options (★) should be selected for best delivery.
The Expanded offering is subject to additional delivery lead time.

Standard		**Standard**
IE	FM FISCO Intrinsically Safe; for FOUNDATION fieldbus protocol only	★
K2	INMETRO Flameproof, Intrinsic Safety	★
K5	FM Explosion-proof, Dust Ignition-proof, Intrinsically Safe, and Division 2	★
K6	CSA and ATEX Explosion-proof, Intrinsically Safe, and Division 2 (combination of C6 and K8)	★
K7	IECEx Flameproof, Dust Ignition-proof, Intrinsic Safety, and Type n (combination of I7, N7, and E7)	★
K8	ATEX Flame-proof, Intrinsic Safety, Type n, Dust (combination of E8, I1 and N1)	★
KB	FM and CSA Explosion-proof, Dust Ignition-proof, Intrinsically Safe, and Division 2 (combination of K5 and C6)	★
KD	FM, CSA, and ATEX Explosion-proof, Intrinsically Safe (combination of K5, C6, I1, and E8)	★
N1	ATEX Type n Certification and Dust	★
N3	China Type n	★
N7	IECEx Type n Certification	★
Drinking Water Approval		
Standard		**Standard**
DW[8]	NSF drinking water approval	★
Shipboard Approvals		
Standard		**Standard**
SBS	American Bureau of Shipping	★
Custody Transfer		
Standard		**Standard**
C5	Measurement Canada Accuracy Approval *(Limited availability depending on transmitter type and range. Contact an Emerson Process Management representative)*	★
Calibration Certification		
Standard		**Standard**
Q4	Calibration Certificate	★
QG	Calibration Certificate and GOST Verification Certificate	★
QP	Calibration Certification and tamper evident seal	★
Material Traceability Certification		
Standard		**Standard**
Q8	Material Traceability Certification per EN 10204 3.1.B	★
Quality Certification for Safety		
Standard		**Standard**
QS[9]	Prior-use certificate of FMEDA Data	★
QT[5][10]	Safety certified to IEC 61508 with certificate of FMEDA	★
Configuration Buttons		
Standard		**Standard**
D4[10]	Analog Zero and Span	★
DZ[10]	Digital Zero Trim	★
Display and Interface Options		
Standard		**Standard**
M4[11]	LCD Display with Local Operator Interface	★
M5	LCD Display	★
Conduit Plug		
Standard		**Standard**
DO[12]	316 SST Conduit Plug	★
Transient Terminal Block		
Standard		**Standard**
T1[13]	Transient Protection Terminal Block	★

Table 2. 3051T In-Line Pressure Transmitter Ordering Information

★ The Standard offering represents the most common options. The starred options (★) should be selected for best delivery.
The Expanded offering is subject to additional delivery lead time.

Software Configuration		
Standard		**Standard**
C1[10]	Custom Software Configuration (Completed CDS 00806-0100-4001 required with order)	★
Alarm Levels		
Standard		**Standard**
C4[10][14]	Analog Output Levels Compliant with NAMUR Recommendation NE 43, Alarm High	★
CN[10][14]	Analog Output Levels Compliant with NAMUR Recommendation NE 43, Low Alarm	★
CR[5][10]	Custom alarm and saturation signal levels, high alarm (requires C1 and Configuration Data Sheet)	★
CS[5][10]	Custom alarm and saturation signal levels, low alarm (requires C1 and Configuration Data Sheet)	★
CT[5][10]	Low alarm (standard Rosemount alarm and saturation levels)	★
Pressure Testing		
Expanded		
P1	Hydrostatic Testing with Certificate	
Cleaning Process Area[15]		
Expanded		
P2	Cleaning for Special Service	
P3	Cleaning for <1 PPM Chlorine/Fluorine	
High Accuracy		
Standard		**Standard**
P8[16]	0.04% Accuracy to 5:1 turndown (Range 2-4)	★
Ground Screw		
Standard		**Standard**
V5[17]	External Ground Screw Assembly	★
Surface Finish		
Standard		**Standard**
Q16	Surface finish certification for sanitary remote seals	★
Toolkit Total System Performance Reports		
Standard		**Standard**
QZ	Remote Seal System Performance Calculation Report	★
Conduit Electrical Connector		
Standard		**Standard**
GE	M12, 4-pin, Male Connector (eurofast®)	★
GM	A size Mini, 4-pin, Male Connector (minifast®)	★
HART Revision Configuration		
Standard		
HR5[5][10][18]	Configured for HART Revision 5	★
HR7[5][10][19]	Configured for HART Revision 7	★
Typical Model Number:	**3051T G 5 F 2A 2 1 A B4**	

(1) 3051TG lower range limit varies with atmospheric pressure.

(2) HART Revision 5 is the default HART output. The Enhanced 3051 can be factory or field configured to HART Revision 7. To order HART Revision 7 factory configured, add option code HR7.

(3) Option code M4 - LCD Display with Local Operator Interface required for local addressing and configuration.

(4) Materials of Construction comply with recommendations per NACE MR0175/ISO 15156 for sour oil field production environments. Environmental limits apply to certain materials. Consult latest standard for details. Selected materials also conform to NACE MR0103 for sour refining environments.

(5) Select Configuration Buttons (option code D4 or DZ) or Local Operator Interface (option code M4) if local configuration buttons are required.

(6) "Assemble-to" items are specified separately and require a completed model number.

(7) Panel mounting bolts are not supplied.

(8) Not available with Alloy C-276 isolator (3 code), tantalum isolator (5 code), all cast C-276 flanges, all plated CS flanges, all DIN flanges, all Level flanges, assemble-to manifolds (S5 and S6 codes), assemble-to seals (S1 and S2 codes), assemble-to primary elements (S3 and S4 codes), surface finish certification (Q16 code), and remote seal system report (QZ code).

(9) Only Available with standard 3051 4-20mA HART.

(10) Only available with HART 4-20 mA output (output code A).

(11) Not available with FOUNDATION Fieldbus (output code F)

(12) Transmitter is shipped with 316 SST conduit plug (uninstalled) in place of standard carbon steel conduit plug.

(13) The T1 option is not needed with FISCO Product Certifications; transient protection is included in the FISCO product certification codes IA and IE.

(14) NAMUR-Compliant operation is pre-set at the factory and cannot be changed to standard operation in the field for the standard 3051.

(15) Not valid with Alternate Process Connection S5.

(16) Only available with Standard 3051. See specification section for more information.

(17) The V5 option is not needed with T1 option; external ground screw assembly is included with the T1 option.

(18) Configures the HART output to HART Revision 5. The device can be field configured to HART Revision 7 if needed.

(19) Configures the HART output to HART Revision 7. The device can be field configured to HART Revision 5 if needed.

Rosemount 3051CF Flowmeter Series





Rosemount 3051CFA
Annubar Flowmeter

This ordering table contains the following Rosemount 3051CF configurations:

Configuration	Transmitter Output Code
4-20 mA HART® -3051 -Enhanced 3051(1)	A
FOUNDATION™ fieldbus	F
PROFIBUS PA	W

(1) The enhanced 4-20 mA HART device can be ordered with Transmitter Output option code A plus any of the following new option codes: DA0, M4, QT, DZ, CR, CS, CT, HR5, HR7.

See Specifications and Options for more details on each configuration.

Additional Information
Specifications: page 38
Certifications: page 47
Dimensional Drawings: page 53

Table 3. Rosemount 3051CFA Annubar Flowmeter Ordering Information

★ The Standard offering represents the most common options. The starred options (★) should be selected for best delivery.
The Expanded offering is subject to additional delivery lead time.

Model	Product Description	
3051CFA	Annubar Flowmeter	
Measurement Type		
Standard		**Standard**
D	Differential Pressure	★
Fluid Type		
Standard		**Standard**
L	Liquid	★
G	Gas	★
S	Steam	★
Line Size		
Standard		**Standard**
020	2-in. (50 mm)	★
025	2 1/2-in. (63.5 mm)	★
030	3-in. (80 mm)	★
035	3 1/2-in. (89 mm)	★
040	4-in. (100 mm)	★
050	5-in. (125 mm)	★
060	6-in. (150 mm)	★
070	7-in. (175 mm)	★
080	8-in. (200 mm)	★
100	10-in. (250 mm)	★
120	12-in. (300 mm)	★
Expanded		
140	14-in. (350 mm)	
160	16-in. (400 mm)	
180	18-in. (450 mm)	
200	20-in. (500 mm)	
240	24-in. (600 mm)	
300	30-in. (750 mm)	
360	36-in. (900 mm)	
420	42-in. (1066 mm)	

Table 3. Rosemount 3051CFA Annubar Flowmeter Ordering Information

★ The Standard offering represents the most common options. The starred options (★) should be selected for best delivery.
The Expanded offering is subject to additional delivery lead time.

Expanded		
480	48-in. (1210 mm)	
600	60-in. (1520 mm)	
720	72-in. (1820 mm)	
780	78-in (1950 mm)	
840	84-in. (2100 mm)	
900	90-in. (2250 mm)	
960	96-in (2400 mm)	
Pipe I.D. Range		
Standard		**Standard**
C	Range C from the Pipe I.D. table	★
D	Range D from the Pipe I.D. table	★
Expanded		
A	Range A from the Pipe I.D. table	
B	Range B from the Pipe I.D. table	
E	Range E from the Pipe I.D. table	
Z	Non-standard Pipe I.D. Range or Line Sizes greater than 12 inches	
Pipe Material / Mounting Assembly Material		
Standard		**Standard**
C	Carbon steel (A105)	★
S	316 Stainless Steel	★
0	No Mounting (Customer Supplied)	★
Expanded		
G	Chrome-Moly Grade F-11	
N	Chrome-Moly Grade F-22	
J	Chrome-Moly Grade F-91	
Piping Orientation		
Standard		**Standard**
H	Horizontal Piping	★
D	Vertical Piping with Downwards Flow	★
U	Vertical Piping with Upwards Flow	★
Annubar Type		
Standard		**Standard**
P	Pak-Lok	★
F	Flanged with opposite side support	★
Expanded		
L	Flange-Lok	
G	Gear-Drive Flo-Tap	
M	Manual Flo-Tap	
Sensor Material		
Standard		**Standard**
S	316 Stainless Steel	★
Expanded		
H	Alloy C-276	

Table 3. Rosemount 3051CFA Annubar Flowmeter Ordering Information

★ The Standard offering represents the most common options. The starred options (★) should be selected for best delivery.
The Expanded offering is subject to additional delivery lead time.

Sensor Size				
Standard				**Standard**
1	Sensor size 1 — Line sizes 2-in. (50 mm) to 8-in. (200 mm)			★
2	Sensor size 2 — Line sizes 6-in. (150 mm) to 96-in. (2400 mm)			★
3	Sensor size 3 — Line sizes greater than 12-in. (300 mm)			★
Mounting Type				
Standard				**Standard**
T1	Compression or Threaded Connection			★
A1	150# RF ANSI			★
A3	300# RF ANSI			★
A6	600# RF ANSI			★
D1	DN PN16 Flange			★
D3	DN PN40 Flange			★
D6	DN PN100 Flange			★
Expanded				
A9(1)	900# RF ANSI			
AF(1)	1500# RF ANSI			
AT(1)	2500 # RF ANSI			
R1	150# RTJ Flange			
R3	300# RTJ Flange			
R6	600# RTJ Flange			
R9(1)	900# RTJ Flange			
RF(1)	1500# RTJ Flange			
RT(1)	2500# RTJ Flange			
Opposite Side Support or Packing Gland				
Standard				**Standard**
0	No opposite side support or packing gland (Required for Pak-Lok and Flange-Lok models)			★
	Opposite Side Support – Required for Flanged Models			
C	NPT Threaded Opposite Support Assembly – Extended Tip			★
D	Welded Opposite Support Assembly – Extended Tip			★
Expanded				
	Packing Gland – Required for Flo-Tap Models			
	Packing Gland Material	*Rod Material*	*Packing Material*	
J	Stainless Steel Packing Gland / Cage Nipple	Carbon Steel	PTFE	
K	Stainless Steel Packing Gland / Cage Nipple	Stainless Steel	PTFE	
L	Stainless Steel Packing Gland / Cage Nipple	Carbon Steel	Graphite	
N	Stainless Steel Packing Gland / Cage Nipple	Stainless Steel	Graphite	
R	Alloy C-276 Packing Gland / Cage Nipple	Stainless Steel	Graphite	
Isolation Valve for Flo-Tap Models				
Standard				**Standard**
0	Not Applicable or Customer Supplied			★
Expanded				
1	Gate Valve, Carbon Steel			
2	Gate Valve, Stainless Steel			
5	Ball Valve, Carbon Steel			
6	Ball Valve, Stainless Steel			

Table 3. Rosemount 3051CFA Annubar Flowmeter Ordering Information

★ The Standard offering represents the most common options. The starred options (★) should be selected for best delivery.
The Expanded offering is subject to additional delivery lead time.

Temperature Measurement			
Standard			**Standard**
T	Integral RTD – not available with Flanged model greater than class 600#		★
0	No Temperature Sensor		★
Expanded			
R	Remote Thermowell and RTD		
Transmitter Connection Platform			
Standard			**Standard**
3	Direct-mount, Integral 3-valve Manifold– not available with Flanged model greater than class 600		★
5	Direct -mount, 5-valve Manifold – not available with Flanged model greater than class 600		★
7	Remote-mount NPT Connections ($^1/_2$-in. NPT)		★
Expanded			
6	Direct-mount, high temperature 5-valve Manifold – not available with Flanged model greater than class 600		
8	Remote-mount SW Connections ($^1/_2$-in.)		
Differential Pressure Range			
Standard			**Standard**
1	0 to 25 in H_2O (0 to 62,3 mbar)		★
2	0 to 250 in H_2O (0 to 623 mbar)		★
3	0 to 1000 in H_2O (0 to 2,5 bar)		★
Transmitter Output			
Standard			**Standard**
A[2]	4–20 mA with digital signal based on HART Protocol		★
F	FOUNDATION fieldbus Protocol		★
W[3]	PROFIBUS PA Protocol		★
Transmitter Housing Material		**Conduit Entry Size**	
Standard			**Standard**
A	Aluminum	$^1/_2$-14 NPT	★
B	Aluminum	M20 x 1.5	★
J	SST	$^1/_2$-14 NPT	★
K	SST	M20 x 1.5	★
Expanded			
D	Aluminum	G$^1/_2$	
M	SST	G$^1/_2$	
Transmitter Performance Class			
Standard			**Standard**
1	1.6% flow rate accuracy, 8:1 flow turndown, 5-yr. stability		★

Options (Include with selected model number)

Pressure Testing		
Expanded		
P1[4]	Hydrostatic Testing with Certificate	
PX[4]	Extended Hydrostatic Testing	
Special Cleaning		
Expanded		
P2	Cleaning for Special Services	
PA	Cleaning per ASTM G93 Level D (Section 11.4)	
Material Testing		
Expanded		
V1	Dye Penetrant Exam	

Table 3. Rosemount 3051CFA Annubar Flowmeter Ordering Information

★ The Standard offering represents the most common options. The starred options (★) should be selected for best delivery.
The Expanded offering is subject to additional delivery lead time.

Material Examination		
Expanded		
V2	Radiographic Examination	
Flow Calibration		
Expanded		
W1	Flow Calibration (Average K)	
Special Inspection		
Standard		**Standard**
QC1	Visual & Dimensional Inspection with Certificate	★
QC7	Inspection & Performance Certificate	★
Surface Finish		
Standard		**Standard**
RL	Surface finish for Low Pipe Reynolds # in Gas & Steam	★
RH	Surface finish for High Pipe Reynolds # in Liquid	★
Material Traceability Certification		
Standard		**Standard**
Q8[5]	Material Traceability Certification per EN 10474:2004 3.1	★
Code Conformance[6]		
Expanded		
J2	ANSI/ASME B31.1	
J3	ANSI/ASME B31.3	
Materials Conformance		
Expanded		
J5[7]	NACE MR-0175 / ISO 15156	
Country Certification		
Standard		**Standard**
J6	European Pressure Directive (PED)	★
Expanded		
J1	Canadian Registration	
Installed in Flanged Pipe Spool Section		
Expanded		
H3	150# Flanged Connection with Rosemount Standard Length and Schedule	
H4	300# Flanged Connection with Rosemount Standard Length and Schedule	
H5	600# Flanged Connection with Rosemount Standard Length and Schedule	
Instrument Connections for Remote Mount Options		
Standard		**Standard**
G2	Needle Valves, Stainless Steel	★
G6	OS&Y Gate Valve, Stainless Steel	★
Expanded		
G1	Needle Valves, Carbon Steel	
G3	Needle Valves, Alloy C-276	
G5	OS&Y Gate Valve, Carbon Steel	
G7	OS&Y Gate Valve, Alloy C-276	
Special Shipment		
Standard		**Standard**
Y1	Mounting Hardware Shipped Separately	★

Table 3. Rosemount 3051CFA Annubar Flowmeter Ordering Information

★ The Standard offering represents the most common options. The starred options (★) should be selected for best delivery.
The Expanded offering is subject to additional delivery lead time.

Special Dimensions		
Expanded		
VM	Variable Mounting	
VT	Variable Tip	
VS	Variable length Spool Section	
PlantWeb Control Functionality		
Standard		**Standard**
A01[8]	FOUNDATION fieldbus Advanced Control Function Block Suite	★
PlantWeb Diagnostic Functionality		
Standard		**Standard**
DA0[9][10]	Power Advisory HART Diagnostic	★
D01[8]	FOUNDATION fieldbus Diagnostics Suite	★
Product Certifications		
Standard		**Standard**
C6	CSA Explosion-proof, Dust Ignition-proof, Intrinsically Safe, Division 2	★
E5	FM Explosion-proof, Dust Ignition-proof	★
E7	IECEx Flameproof, Dust Ignition-proof	★
E8	ATEX Flameproof, Dust	★
I1	ATEX Intrinsic Safety	★
I5	FM Intrinsically Safe, Division 2	★
IA	ATEX FISCO Intrinsic Safety; for FOUNDATION fieldbus protocol only	★
K5	FM Explosion-proof, Dust Ignition-proof, Intrinsically Safe, Division 2 (combination of E5 and I5)	★
K6	CSA Explosion-proof, Dust Ignition-proof, Intrinsically Safe, Division 2 (combination of E6 and I6)	★
K8	ATEX Flameproof, Intrinsic Safety, Type n, Dust (combination of E8, I1 and N1)	★
KB	FM and CSA Explosion-proof, Dust Ignition-proof, Intrinsically Safe, Division 2 (combination of K5 and C6)	★
KD	FM, CSA, and ATEX Explosion-proof, Intrinsically Safe (combination of K5, C6, I1, and E8)	★
N1	ATEX Type n	★
Sensor Fill Fluid and O-ring Options		
Standard		**Standard**
L1	Inert Sensor Fill Fluid *Note: Silicone fill fluid is standard.*	★
L2	Graphite-Filled (PTFE) O-ring	★
LA	Inert Sensor Fill Fluid and Graphite-Filled (PTFE) O-ring	★
Shipboard Approvals		
Standard		**Standard**
SBS	American Bureau of Shipping	★
Display and Interface Options		
Standard		**Standard**
M4[11]	LCD Display with Local Operator Interface	★
M5	LCD Display	★
Transmitter Calibration Certification		
Standard		**Standard**
Q4	Calibration Certificate for Transmitter	★
Quality Certification for Safety		
Standard		**Standard**
QS[12]	Prior-use certificate of FMEDA data	★
QT[9][10]	Safety certified to IEC 61508 with certificate of FMEDA	★
Transient Protection		
Standard		**Standard**
T1[13]	Transient terminal block	★

Table 3. Rosemount 3051CFA Annubar Flowmeter Ordering Information

★ The Standard offering represents the most common options. The starred options (★) should be selected for best delivery.
The Expanded offering is subject to additional delivery lead time.

Manifold for Remote Mount Option		
Standard		**Standard**
F2	3-Valve Manifold, Stainless Steel	★
F6	5-Valve Manifold, Stainless Steel	★
Expanded		
F1	3-Valve Manifold, Carbon Steel	
F3	3-Valve Manifold, Alloy C-276	
F5	5-Valve Manifold, Carbon Steel	
F7	5-Valve Manifold, Alloy C-276	
Alarm Levels		
Standard		**Standard**
C4(10)(14)	NAMUR Alarm and Saturation Levels, High Alarm	★
CN(10)(14)	NAMUR Alarm and Saturation Levels, Low Alarm	★
CR(9)(10)	Custom alarm and saturation signal levels, high alarm (requires C1 and Configuration Data Sheet)	★
CS(9)(10)	Custom alarm and saturation signal levels, low alarm (requires C1 and Configuration Data Sheet)	★
CT(9)(10)	Low alarm (standard Rosemount alarm and saturation levels)	★
Configuration Buttons		
Standard		**Standard**
D4(10)	Analog Zero and Span	★
DZ(10)	Digital Zero Trim	★
Ground Screw		
Standard		**Standard**
V5(15)	External Ground Screw Assembly	★
HART Revision Configuration		
Standard		**Standard**
HR5(9)(10)(16)	Configured for HART Revision 5	★
HR7(9)(10)(17)	Configured for HART Revision 7	★
Typical Model Number: 3051CFA D L 060 D C H P S 2 T1 0 0 0 3 2 A A 1		

(1) Available in remote mount applications only.

(2) HART Revision 5 is the default HART output. The Enhanced 3051 can be factory or field configured to HART Revision 7. To order HART Revision 7 factory configured, add option code HR7.

(3) Option code M4 - LCD Display with Local Operator Interface required for local addressing and configuration.

(4) Applies to assembled flowmeter only, mounting not tested.

(5) Instrument Connections for Remote Mount Options and Isolation Valves for Flo-tap Models are not included in the Material Traceability Certification.

(6) Not available with Transmitter Connection Platform 6.

(7) Materials of Construction comply with metallurgical requirements within NACE MR0175/ISO for sour oil field production environments. Environmental limits apply to certain materials. Consult latest standard for details. Selected materials also conform to NACE MR0103 for sour refining environments.

(8) Only valid with FOUNDATION fieldbus Output Code F.

(9) Select Configuration Buttons (option code D4 or DZ) or Local Operator Interface (option code M4) if local configuration buttons are required.

(10) Only available with 4-20 mA HART output (output Code A).

(11) Not available with FOUNDATION fieldbus (Output Code F).

(12) Only Available with standard 3051 4-20mA HART.

(13) The T1 option is not needed with FISCO Product Certifications, transient protection is included with the FISCO Product Certification code IA.

(14) NAMUR-Compliant operation is pre-set at the factory and cannot be changed to standard operation in the field for the standard 3051.

(15) The V5 option is not needed with the T1 option; external ground screw assembly is included with the T1 option.

(16) Configures the HART output to HART Revision 5. The device can be field configured to HART Revision 7 if needed.

(17) Configures the HART output to HART Revision 7. The device can be field configured to HART Revision 5 if needed.



Rosemount 3051CFC Compact Flowmeter

Additional Information
Specifications: page 38
Certifications: page 47
Dimensional Drawings: page 53

Table 4. Rosemount 3051CFC Compact Flowmeter Ordering Information

★ The Standard offering represents the most common options. The starred options (★) should be selected for best delivery.
The Expanded offering is subject to additional delivery lead time.

Model	Product Description	
3051CFC	Compact Flowmeter	
Measurement Type		
Standard		**Standard**
D	Differential Pressure	★
Primary Element Technology		
Standard		**Standard**
C	Conditioning Orifice Plate	★
P	Orifice Plate	★
Material Type		
Standard		**Standard**
S	316 SST	★
Line Size		
Standard		**Standard**
005(1)	1/2-in. (15 mm)	★
010(1)	1-in. (25 mm)	★
015(1)	1 1/2-in. (40 mm)	★
020	2-in. (50 mm)	★
030	3-in. (80 mm)	★
040	4-in. (100 mm)	★
060	6-in. (150 mm)	★
080	8-in. (200 mm)	★
100	10-in. (250 mm)	★
120	12-in. (300 mm)	★
Primary Element Style		
Standard		**Standard**
N	Square Edged	★
Primary Element Type		
Standard		**Standard**
040	0.40 Beta Ratio	★
065(2)	0.65 Beta Ratio	★
Temperature Measurement		
Standard		**Standard**
0	No Temperature Sensor	★
Expanded		
R	Remote Thermowell and RTD	
Transmitter Connection Platform		
Standard		**Standard**
3	Direct-mount, Integral 3-valve Manifold	★
7	Remote-mount, 1/4-in. NPT Connections	★

Table 4. Rosemount 3051CFC Compact Flowmeter Ordering Information

★ The Standard offering represents the most common options. The starred options (★) should be selected for best delivery.
The Expanded offering is subject to additional delivery lead time.

Differential Pressure Range			
Standard			**Standard**
1	0 to 25 in H_2O (0 to 62,3 mbar)		★
2	0 to 250 in H_2O (0 to 623 mbar)		★
3	0 to 1000 in H_2O (0 to 2,5 bar)		★
Transmitter Output			
Standard			**Standard**
A(3)	4–20 mA with digital signal based on HART Protocol		★
F	FOUNDATION fieldbus Protocol		★
W(4)	PROFIBUS PA Protocol		★
Transmitter Housing Material		**Conduit Entry Size**	
Standard			**Standard**
A	Aluminum	1/2-14 NPT	★
B	Aluminum	M20 x 1.5	★
J	SST	1/2-14 NPT	★
K	SST	M20 x 1.5	★
Expanded			
D	Aluminum	G1/2	
M	SST	G1/2	
Transmitter Performance Class			
Standard			**Standard**
1	Up to ±1.75% flow rate accuracy, 8:1 flow turndown, 5-year stability		★

Options (Include with selected model number)

Installation Accessories		
Standard		**Standard**
AB	ANSI Alignment Ring (150#) (Only required for 10-in. (250 mm) and 12-in. (300mm) line sizes)	★
AC	ANSI Alignment Ring (300#) (Only required for 10-in. (250 mm) and 12-in. (300mm) line sizes)	★
AD	ANSI Alignment Ring (600#) (Only required for 10-in. (250 mm) and 12-in. (300mm) line sizes)	★
DG	DIN Alignment Ring (PN16)	★
DH	DIN Alignment Ring (PN40)	★
DJ	DIN Alignment Ring (PN100)	★
Expanded		
JB	JIS Alignment Ring (10K)	
JR	JIS Alignment Ring (20K)	
JS	JIS Alignment Ring (40K)	
Remote Adapters		
Standard		**Standard**
FE	Flange Adapters 316 SST (1/2-in NPT)	★
High Temperature Application		
Expanded		
HT	Graphite Valve Packing (Tmax = 850 °F)	
Flow Calibration		
Expanded		
WC(5)	Flow Calibration Certification (3 point)	
WD(5)	Discharge Coefficient Verification (full 10 point)	
Pressure Testing		
Expanded		
P1	Hydrostatic Testing with Certificate	

Table 4. Rosemount 3051CFC Compact Flowmeter Ordering Information

★ The Standard offering represents the most common options. The starred options (★) should be selected for best delivery.
The Expanded offering is subject to additional delivery lead time.

Special Cleaning		
Expanded		
P2	Cleaning for Special Services	
PA	Cleaning per ASTM G93 Level D (Section 11.4)	
Special Inspection		
Standard		**Standard**
QC1	Visual & Dimensional Inspection with Certificate	★
QC7	Inspection and Performance Certificate	★
Transmitter Calibration Certification		
Standard		**Standard**
Q4	Calibration Certificate for Transmitter	★
Quality Certification for Safety		
Standard		**Standard**
QS[6]	Prior-use certificate of FMEDA data	★
QT[7] [8]	Safety certified to IEC 61508 with certificate of FMEDA	★
Material Traceability Certification		
Standard		**Standard**
Q8	Material Traceability Certification per EN 10204:2004 3.1	★
Code Conformance		
Expanded		
J2	ANSI/ASME B31.1	
J3	ANSI/ASME B31.3	
J4	ANSI/ASME B31.8	
Materials Conformance		
Expanded		
J5[9]	NACE MR-0175 / ISO 15156	
Country Certification		
Expanded		
J1	Canadian Registration	
Product Certifications		
Standard		**Standard**
C6	CSA Explosion-proof, Dust Ignition-proof, Intrinsically Safe, Division 2	★
E5	FM Explosion-proof, Dust Ignition-proof	★
E7	IECEx Flameproof, Dust Ignition-proof	★
E8	ATEX Flameproof, Dust	★
I1	ATEX Intrinsic Safety	★
I5	FM Intrinsically Safe, Division 2	★
IA	ATEX FISCO Intrinsic Safety; for FOUNDATION fieldbus protocol only	★
K5	FM Explosion-proof, Dust Ignition-proof, Intrinsically Safe, Division 2 (combination of E5 and I5)	★
K6	CSA Explosion-proof, Dust Ignition-proof, Intrinsically Safe, Division 2 (combination of E6 and I6)	★
K8	ATEX Flameproof, Intrinsic Safety, Type n, Dust (combination of E8, I1 and N1)	★
KB	FM and CSA Explosion-proof, Dust Ignition-proof, Intrinsically Safe, Division 2 (combination of K5 and C6)	★
KD	FM, CSA, and ATEX Explosion-proof, Intrinsically Safe (combination of K5, C6, I1, and E8)	★
N1	ATEX Type n	★
Sensor Fill Fluid and O-ring Options		
Standard		**Standard**
L1	Inert Sensor Fill Fluid	★
L2	Graphite-Filled (PTFE) O-ring	★
LA	Inert Sensor Fill Fluid and Graphite-Filled (PTFE) O-ring	★

Table 4. Rosemount 3051CFC Compact Flowmeter Ordering Information

★ The Standard offering represents the most common options. The starred options (★) should be selected for best delivery.
The Expanded offering is subject to additional delivery lead time.

Shipboard Approvals		
Standard		**Standard**
SBS	American Bureau of Shipping	★
Display and Interface Options		
Standard		**Standard**
M4(10)	LCD Display with Local Operator Interface	★
M5	LCD Display	★
Transient Protection		
Standard		**Standard**
T1(11)	Transient terminal block	★
Manifold for Remote Mount Option		
Standard		**Standard**
F2	3-Valve Manifold, Stainless Steel	★
F6	5-Valve Manifold, Stainless Steel	★
PlantWeb Control Functionality		
Standard		**Standard**
A01(12)	FOUNDATION fieldbus Advanced Control Function Block Suite	★
PlantWeb Diagnostic Functionality		
Standard		**Standard**
DA0(7)(13)	Power Advisory HART Diagnostic	★
D01(8)(12)	FOUNDATION fieldbus Diagnostic Suite	★
Alarm Limit		
Standard		**Standard**
C4(7)(8)	NAMUR Alarm and Saturation Levels, High Alarm	★
CN(7)(8)	NAMUR Alarm and Saturation Levels, Low Alarm	★
CR(13)(7)	Custom alarm and saturation signal levels, high alarm (requires C1 and Configuration Data Sheet)	★
CS(13)(7)	Custom alarm and saturation signal levels, low alarm (requires C1 and Configuration Data Sheet)	★
CT(13)(7)	Low alarm (standard Rosemount alarm and saturation levels)	★
Ground Screw		
Standard		**Standard**
V5(14)	External Ground Screw Assembly	★
Configuration Buttons		
Standard		**Standard**
D4(7)	Analog Zero and Span	★
DZ(7)(13)	Digital Zero Trim	★
HART Revision Configuration		
Standard		**Standard**
HR5(7)(13)(15)	Configured for HART Revision 5	★
HR7(7)(13)(16)	Configured for HART Revision 7	★
Typical Model Number: 3051CFC D C S 060 N 065 0 3 2 A A 1 WC E5 M5		

(1) Not available for Primary Element Technology C.

(2) For 2-in. (50 mm) line sizes the Primary Element Type is 0.6 for Primary Element Technology Code C.

(3) HART Revision 5 is the default HART output. The Enhanced 3051 can be factory or field configured to HART Revision 7. To order HART Revision 7 factory configured, add option code HR7.

(4) Option code M4 - LCD Display with Local Operator Interface required for local addressing and configuration.

(5) Not available with Primary Element Technology P.

(6) Only Available with standard 3051 4-20mA HART.

(7) Only available with 4-20 mA HART Output.

(8) NAMUR-Compliant operation is pre-set at the factory and cannot be changed to standard operation in the field for the standard 3051.

(9) Materials of Construction comply with metallurgical requirements within NACE MR0175/ISO for sour oil field production environments. Environmental limits apply to certain materials. Consult latest standard for details. Selected materials also conform to NACE MR0103 for sour refining environments.

(10) Not available with output code F - FOUNDATION Fieldbus.

(11) The T1 option is not needed with FISCO Product Certifications, transient protection is included with the FISCO Product Certification code IA.

(12) Only valid with FOUNDATION fieldbus Output Code F.

(13) Select Configuration Buttons (option code D4 or DZ) or Local Operator Interface (option code M4) if local configuration buttons are required.

(14) The V5 option is not needed with the T1 option; external ground screw assembly is included with the T1 option.

(15) Configures the HART output to HART Revision 5. The device can be field configured to HART Revision 7 if needed.

(16) Configures the HART output to HART Revision 7. The device can be field configured to HART Revision 5 if needed.



Rosemount 3051CFP Integral Orifice Flowmeter

Additional Information
Specifications: page 38
Certifications: page 47
Dimensional Drawings: page 53

Table 5. Rosemount 3051CFP Integral Orifice Flowmeter Ordering Information

★ The Standard offering represents the most common options. The starred options (★) should be selected for best delivery.
The Expanded offering is subject to additional delivery lead time.

Model	Product Description	
3051CFP	Integral Orifice Flowmeter	
Measurement Type		
Standard		**Standard**
D	Differential Pressure	★
Body Material		
Standard		**Standard**
S	316 SST	★
Line Size		
Standard		**Standard**
005	1/2-in. (15 mm)	★
010	1-in. (25 mm)	★
015	1 1/2-in. (40 mm)	★
Process Connection		
Standard		**Standard**
T1	NPT Female Body (Not Available with Remote Thermowell and RTD)	★
S1(1)	Socket Weld Body (Not Available with Remote Thermowell and RTD)	★
P1	Pipe Ends: NPT Threaded	★
P2	Pipe ends: Beveled	★
D1	Pipe Ends: Flanged, DIN PN16, slip-on	★
D2	Pipe Ends: Flanged, DIN PN40, slip-on	★
D3	Pipe Ends: Flanged, DIN PN100, slip-on	★
W1	Pipe Ends: Flanged, RF, ANSI Class 150, weld-neck	★
W3	Pipe Ends: Flanged, RF, ANSI Class 300, weld-neck	★
W6	Pipe Ends: Flanged, RF, ANSI Class 600, weld-neck	★
Expanded		
A1	Pipe Ends: Flanged, RF, ANSI Class 150, slip-on	
A3	Pipe Ends: Flanged, RF, ANSI Class 300, slip-on	
A6	Pipe Ends: Flanged, RF, ANSI Class 600, slip-on	
R1	Pipe Ends: Flanged, RTJ, ANSI Class 150, slip-on	
R3	Pipe Ends: Flanged, RTJ, ANSI Class 300, slip-on	
R6	Pipe Ends: Flanged, RTJ, ANSI Class 600, slip-on	
Orifice Plate Material		
Standard		**Standard**
S	316 SST	★
Expanded		
H	Alloy C-276	
M	Alloy 400	

Table 5. Rosemount 3051CFP Integral Orifice Flowmeter Ordering Information

★ The Standard offering represents the most common options. The starred options (★) should be selected for best delivery.
The Expanded offering is subject to additional delivery lead time.

Bore Size Option		
Standard		**Standard**
0066	0.066-in. (1.68 mm) for 1/2-in. Pipe	★
0109	0.109-in. (2.77 mm) for 1/2-in. Pipe	★
0160	0.160-in. (4.06 mm) for 1/2-in. Pipe	★
0196	0.196-in. (4.98 mm) for 1/2-in. Pipe	★
0260	0.260-in. (6.60 mm) for 1/2-in. Pipe	★
0340	0.340-in. (8.64 mm) for 1/2-in. Pipe	★
0150	0.150-in. (3.81 mm) for 1-in. Pipe	★
0250	0.250-in. (6.35 mm) for 1-in. Pipe	★
0345	0.345-in. (8.76 mm) for 1-in. Pipe	★
0500	0.500-in. (12.70 mm) for 1-in. Pipe	★
0630	0.630-in. (16.00 mm) for 1-in. Pipe	★
0800	0.800-in. (20.32 mm) for 1-in. Pipe	★
0295	0.295-in. (7.49 mm) for 1 1/2-in. Pipe	★
0376	0.376-in. (9.55 mm) for 1 1/2-in. Pipe	★
0512	0.512-in. (13.00 mm) for 1 1/2-in. Pipe	★
0748	0.748-in. (19.00 mm) for 1 1/2-in. Pipe	★
1022	1.022-in. (25.96 mm) for 1 1/2-in. Pipe	★
1184	1.184-in. (30.07 mm) for 1 1/2-in. Pipe	★
Expanded		
0010	0.010-in. (0.25 mm) for 1/2-in. Pipe	
0014	0.014-in. (0.36 mm) for 1/2-in. Pipe	
0020	0.020-in. (0.51 mm) for 1/2-in. Pipe	
0034	0.034-in. (0.86 mm) for 1/2-in. Pipe	
Transmitter Connection Platform		
Standard		**Standard**
D3	Direct-mount, 3-Valve Manifold, SST	★
D5	Direct-mount, 5-Valve Manifold, SST	★
R3	Remote-mount, 3-Valve Manifold, SST	★
R5	Remote-mount, 5-Valve Manifold, SST	★
Expanded		
D4	Direct-mount, 3-Valve Manifold, Alloy C-276	
D6	Direct-mount, 5-Valve Manifold, Alloy C-276	
D7	Direct-mount, High Temperature, 5-Valve Manifold, SST	
R4	Remote-mount, 3-Valve Manifold, Alloy C-276	
R6	Remote-mount, 5-Valve Manifold, Alloy C-276	
Differential Pressure Ranges		
Standard		**Standard**
1	0 to 25 in H_2O (0 to 62,3 mbar)	★
2	0 to 250 in H_2O (0 to 623 mbar)	★
3	0 to 1000 in H_2O (0 to 2,5 bar)	★
Transmitter Output		
Standard		**Standard**
A[(2)]	4–20 mA with digital signal based on HART Protocol	★
F	FOUNDATION fieldbus Protocol	★
W[(3)]	PROFIBUS PA Protocol	★

Table 5. Rosemount 3051CFP Integral Orifice Flowmeter Ordering Information

★ The Standard offering represents the most common options. The starred options (★) should be selected for best delivery. The Expanded offering is subject to additional delivery lead time.

Transmitter Housing Material		**Conduit Entry Size**	
Standard			**Standard**
A	Aluminum	1/2-14 NPT	★
B	Aluminum	M20 x 1.5	★
J	SST	1/2-14 NPT	★
K	SST	M20 x 1.5	★
Expanded			
D	Aluminum	G1/2	
M	SST	G1/2	
Transmitter Performance Class			
Standard			**Standard**
1	up to ±1.75% flow rate accuracy, 8:1 flow turndown, 5-year stability		★

Options (Include with selected model number)

Transmitter Body / Bolt Material		
Expanded		
GT	High Temperature (850 °F / 454 °C)	
Temperature Sensor		
Expanded		
RT(4)	Thermowell and RTD	
Optional Connection		
Standard		**Standard**
G1	DIN 19213 Transmitter Connection	★
Pressure Testing		
Expanded		
P1(5)	Hydrostatic Testing with Certificate	
Special Cleaning		
Expanded		
P2	Cleaning for Special Services	
PA	Cleaning per ASTM G93 Level D (Section 11.4)	
Material Testing		
Expanded		
V1	Dye Penetrant Exam	
Material Examination		
Expanded		
V2	Radiographic Examination	
Flow Calibration		
Expanded		
WD(6)	Discharge Coefficient Verification	
Special Inspection		
Standard		**Standard**
QC1	Visual & Dimensional Inspection with Certificate	★
QC7	Inspection and Performance Certificate	★
Material Traceability Certification		
Standard		**Standard**
Q8	Material Traceability Certification per EN 10204:2004 3.1	★
Code Conformance		
Expanded		
J2(7)	ANSI/ASME B31.1	
J3(7)	ANSI/ASME B31.3	
J4(7)	ANSI/ASME B31.8	

Table 5. Rosemount 3051CFP Integral Orifice Flowmeter Ordering Information

★ The Standard offering represents the most common options. The starred options (★) should be selected for best delivery.
The Expanded offering is subject to additional delivery lead time.

Materials Conformance		
Expanded		
J5[8]	NACE MR-0175 / ISO 15156	
Country Certification		
Standard		**Standard**
J6	European Pressure Directive (PED)	★
Expanded		
J1	Canadian Registration	
Transmitter Calibration Certification		
Standard		**Standard**
Q4	Calibration Certificate for Transmitter	★
Quality Certification for Safety		
Standard		**Standard**
QS[9]	Prior-use certificate of FMEDA data	★
QT[10][11]	Safety certified to IEC 61508 with certificate of FMEDA	★
Product Certifications		
Standard		**Standard**
C6	CSA Explosion-proof, Dust Ignition-proof, Intrinsically Safe, Division 2	★
E5	FM Explosion-proof, Dust Ignition-proof	★
E7	IECEx Flameproof, Dust Ignition-proof	★
E8	ATEX Flameproof, Dust	★
I1	ATEX Intrinsic Safety	★
I5	FM Intrinsically Safe, Division 2	★
IA	ATEX FISCO Intrinsic Safety; for FOUNDATION fieldbus protocol only	★
K5	FM Explosion-proof, Dust Ignition-proof, Intrinsically Safe, Division 2 (combination of E5 and I5)	★
K6	CSA Explosion-proof, Dust Ignition-proof, Intrinsically Safe, Division 2 (combination of E6 and I6)	★
K8	ATEX Flameproof, Intrinsic Safety, Type n, Dust (combination of E8, I1 and N1)	★
KB	FM and CSA Explosion-proof, Dust Ignition-proof, Intrinsically Safe, Division 2 (combination of K5 and C6)	★
KD	FM, CSA, and ATEX Explosion-proof, Intrinsically Safe (combination of K5, C6, I1 and E8)	★
N1	ATEX Type n	★
Sensor Fill Fluid and O-ring Options		
Standard		**Standard**
L1	Inert Sensor Fill Fluid	★
L2	Graphite-Filled (PTFE) O-ring	★
LA	Inert Sensor Fill Fluid and Graphite-Filled (PTFE) O-ring	★
Shipboard Approvals		
Standard		**Standard**
SBS	American Bureau of Shipping	★
Display and Interface Options		
Standard		**Standard**
M4[12]	LCD Display with Local Operator Interface	★
M5	LCD Display	★
Transient Protection		
Standard		**Standard**
T1[13]	Transient terminal block	★
PlantWeb Control Functionality		
Standard		**Standard**
A01[14]	FOUNDATION fieldbus Advanced Control Function Block Suite	★

Table 5. Rosemount 3051CFP Integral Orifice Flowmeter Ordering Information

★ The Standard offering represents the most common options. The starred options (★) should be selected for best delivery.
The Expanded offering is subject to additional delivery lead time.

PlantWeb Diagnostic Functionality		
Standard		**Standard**
DA0[10][11]	Power Advisory HART Diagnostic	★
D01[14]	FOUNDATION fieldbus Diagnostic Suite	★
Alarm Limit		
Standard		**Standard**
C4[10][15]	NAMUR Alarm and Saturation Levels, High Alarm	★
CN[10][15]	NAMUR Alarm and Saturation Levels, Low Alarm	★
CR[10][11]	Custom alarm and saturation signal levels, high alarm (requires C1 and Configuration Data Sheet)	★
CS[10][11]	Custom alarm and saturation signal levels, low alarm (requires C1 and Configuration Data Sheet)	★
CT[10][11]	Low alarm (standard Rosemount alarm and saturation levels)	★
Ground Screw		
Standard		**Standard**
V5[16]	External Ground Screw Assembly	★
Configuration Buttons		
Standard		**Standard**
D4[10]	Analog Zero and Span	★
DZ[10]	Digital Zero Trim	★
HART Revision Configuration		
Standard		**Standard**
HR5[10][11][17]	Configured for HART Revision 5	★
HR7[10][11][18]	Configured for HART Revision 7	★
Typical Model Number: 3051CFP D S 010 W1 S 0500 D3 2 A A 1 E5 M5		

(1) To improve pipe perpendicularity for gasket sealing, socket diameter is smaller than standard pipe O.D.

(2) HART Revision 5 is the default HART output. The Enhanced 3051 can be factory or field configured to HART Revision 7. To order HART Revision 7 factory configured, add option code HR7.

(3) Option code M4 - LCD Display with Local Operator Interface required for local addressing and configuration.

(4) Thermowell Material is the same as the body material.

(5) Does not apply to Process Connection codes T1 and S1.

(6) Not available for bore sizes 0010, 0014, 0020, or 0034.

(7) Not available with DIN Process Connection codes D1, D2, or D3.

(8) Materials of Construction comply with metallurgical requirements within NACE MR0175/ISO for sour oil field production environments. Environmental limits apply to certain materials. Consult latest standard for details. Selected materials also conform to NACE MR0103 for sour refining environments.

(9) Only Available with standard 3051 4-20mA HART.

(10) Only available with 4-20 mA HART output (Option code A).

(11) Select Configuration Buttons (option code D4 or DZ) or Local Operator Interface (option code M4) if local configuration buttons are required.

(12) Not available with FOUNDATION fieldbus (Output Code F).

(13) The T1 option is not needed with FISCO Product Certifications, transient protection is included with the FISCO Product Certification code IA.

(14) Only valid with FOUNDATION fieldbus Output Code F.

(15) NAMUR-Compliant operation is pre-set at the factory and cannot be changed to standard operation in the field for the standard 3051.

(16) The V5 option is not needed with the T1 option; external ground screw assembly is included with the T1 option.

(17) Configures the HART output to HART Revision 5. The device can be field configured to HART Revision 7 if needed.

(18) Configures the HART output to HART Revision 7. The device can be field configured to HART Revision 5 if needed.

Rosemount 3051L Level Transmitter



3051L Level Transmitter

This ordering table contains the following Rosemount 3051L configurations:

Configuration	Transmitter Output Code
4-20 mA HART® -3051 -Enhanced 3051(1)	A
FOUNDATION™ fieldbus	F
PROFIBUS PA	W

(1) The enhanced 4-20 mA HART device can be ordered with Transmitter Output option code A plus any of the following new option codes: DA0, M4, QT, DZ, CR, CS, CT, HR5, HR7.

See Specifications and Options for more details on each configuration.

Additional Information
Specifications: page 38
Certifications: page 47
Dimensional Drawings: page 53

Table 6. Rosemount 3051L Level Transmitter Ordering Information

★ The Standard offering represents the most common options. The starred options (★) should be selected for best delivery.
The Expanded offering is subject to additional delivery lead time.

Model	Transmitter Type			
3051L	Level Transmitter			
Pressure Range				
Standard				**Standard**
2	–250 to 250 inH_2O (–0,6 to 0,6 bar)			★
3	–1000 to 1000 inH_2O (–2,5 to 2,5 bar)			★
4	–300 to 300 psi (–20,7 to 20,7 bar)			★
Transmitter Output				
Standard				**Standard**
A(1)	4–20 mA with Digital Signal Based on *HART* Protocol			★
F	FOUNDATION fieldbus Protocol			★
W(2)	PROFIBUS PA Protocol			★
Process Connection Size, Material, Extension length (High Side)				
Standard				**Standard**
Code	**Process Connection Size**	**Material**	**Extension Length**	★
G0(3)	2-in./DN 50/A	316L SST	Flush Mount Only	★
H0(3)	2-in./DN 50	Alloy C-276	Flush Mount Only	★
J0	2-in./DN 50	Tantalum	Flush Mount Only	★
A0(3)	3-in./DN 80	316L SST	Flush Mount	★
A2(3)	3-in./DN 80	316L SST	2-in./50 mm	★
A4(3)	3-in./DN 80	316L SST	4-in./100 mm	★
A6(3)	3-in./DN 80	316L SST	6-in./150 mm	★
B0(3)	4-in./DN 100	316L SST	Flush Mount	★
B2(3)	4-in./DN 100	316L SST	2-in./50 mm	★
B4(3)	4-in./DN 100	316L SST	4-in./100 mm	★
B6(3)	4-in./DN 100	316L SST	6-in./150 mm	★
C0(3)	3-in./DN 80	Alloy C-276	Flush Mount	★
C2(3)	3-in./DN 80	Alloy C-276	2-in./50 mm	★

Table 6. Rosemount 3051L Level Transmitter Ordering Information

★ The Standard offering represents the most common options. The starred options (★) should be selected for best delivery.
The Expanded offering is subject to additional delivery lead time.

Standard				**Standard**
C4[3]	3-in./DN 80	Alloy C-276	4-in./100 mm	★
C6[3]	3-in./DN 80	Alloy C-276	6-in./150 mm	★
D0[3]	4-in./DN 100	Alloy C-276	Flush Mount	★
D2[3]	4-in./DN 100	Alloy C-276	2-in./50 mm	★
D4[3]	4-in./DN 100	Alloy C-276	4-in./100 mm	★
D6[3]	4-in./DN 100	Alloy C-276	6-in./150 mm	★
E0	3-in./DN 80	Tantalum	Flush Mount Only	★
F0	4-in./DN 100	Tantalum	Flush Mount Only	★
Mounting Flange Size, Rating, Material (High Side)				
	Size	**Rating**	**Material**	
Standard				**Standard**
M	2-in.	ANSI/ASME B16.5 Class 150	CS	★
A	3-in.	ANSI/ASME B16.5 Class 150	CS	★
B	4-in.	ANSI/ASME B16.5 Class 150	CS	★
N	2-in.	ANSI/ASME B16.5 Class 300	CS	★
C	3-in.	ANSI/ASME B16.5 Class 300	CS	★
D	4-in.	ANSI/ASME B16.5 Class 300	CS	★
P	2-in.	ANSI/ASME B16.5 Class 600	CS	★
E	3-in.	ANSI/ASME B16.5 Class 600	CS	★
X[3]	2-in.	ANSI/ASME B16.5 Class 150	SST	★
F[3]	3-in.	ANSI/ASME B16.5 Class 150	SST	★
G[3]	4-in.	ANSI/ASME B16.5 Class 150	SST	★
Y[3]	2-in.	ANSI/ASME B16.5 Class 300	SST	★
H[3]	3-in.	ANSI/ASME B16.5 Class 300	SST	★
J[3]	4-in.	ANSI/ASME B16.5 Class 300	SST	★
Z[3]	2-in.	ANSI/ASME B16.5 Class 600	SST	★
L[3]	3-in.	ANSI/ASME B16.5 Class 600	SST	★
Q	DN 50	PN 10-40 per EN 1092-1	CS	★
R	DN 80	PN 40 per EN 1092-1	CS	★
S	DN 100	PN 40 per EN 1092-1	CS	★
V	DN 100	PN 10/16 per EN 1092-1	CS	★
K[3]	DN 50	PN 10-40 per EN 1092-1	SST	★
T[3]	DN 80	PN 40 per EN 1092-1	SST	★
U[3]	DN 100	PN 40 per EN 1092-1	SST	★
W[3]	DN 100	PN 10/16 per EN 1092-1	SST	★
7[3]	4 in.	ANSI/ASME B16.5 Class 600	SST	★
Expanded				
1	—	10K per JIS B2238	CS	
2	—	20K per JIS B2238	CS	
3	—	40K per JIS B2238	CS	
4[3]	—	10K per JIS B2238	316 SST	
5[3]	—	20K per JIS B2238	316 SST	
6[3]	—	40K per JIS B2238	316 SST	

Table 6. Rosemount 3051L Level Transmitter Ordering Information

★ The Standard offering represents the most common options. The starred options (★) should be selected for best delivery.
The Expanded offering is subject to additional delivery lead time.

Seal Fill Fluid (High Side)		**Specific Gravity**	**Temperature Limits (Ambient Temperature of 70° F (21° C))**	
Standard				**Standard**
A	Syltherm XLT	0.85	-102 to 293 °F (-75 to 145 °C)	★
C	Silicone 704	1.07	32 to 401 °F (0 to 205 °C)	★
D	Silicone 200	0.93	-49 to 401 °F (-45 to 205 °C)	★
H	Inert (Halocarbon)	1.85	-49 to 320 °F (-45 to 160 °C)	★
G	Glycerine and Water	1.13	5 to 203 °F (-15 to 95 °C)	★
N	Neobee M-20	0.92	5 to 401 °F (-15 to 205 °C)	★
P	Propylene Glycol and Water	1.02	5 to 203 F (-15 to 95 °C)	★

Low Pressure Side					
	Configuration	**Flange Adapter**	**Diaphragm Material**	**Sensor Fill Fluid**	
Standard					**Standard**
11[3]	Gage	SST	316L SST	Silicone	★
21[3]	Differential	SST	316L SST	Silicone	★
22[3]	Differential	SST	Alloy C-276	Silicone	★
2A[3]	Differential	SST	316L SST	Inert (Halocarbon)	★
2B[3]	Differential	SST	Alloy C-276	Inert (Halocarbon)	★
31[3]	Tuned-System Assembly with Remote Seal	None	316L SST	Silicone *(Requires Option Code S1)*	★

O-ring			
Standard			**Standard**
A	Glass-filled PTFE		★

Housing Material		**Conduit Entry Size**	
Standard			**Standard**
A	Aluminum	½–14 NPT	★
B	Aluminum	M20 × 1.5	★
J	SST	½–14 NPT	★
K	SST	M20 × 1.5	★
Expanded			
D	Aluminum	G½	
M	SST	G½	

Options (Include with selected model number)

PlantWeb Control Functionality		
Standard		**Standard**
A01[4]	FOUNDATION fieldbus Advanced Control Function Block Suite	★
PlantWeb Diagnostic Functionality		
Standard		**Standard**
DA0[5][8]	Power Advisory HART Diagnostic	★
D01[4]	FOUNDATION fieldbus Diagnostics Suite	★
Seal Assemblies		
Standard		**Standard**
S1[6]	Assembled to One Rosemount 1199 Seal (Requires 1199M)	★

Table 6. Rosemount 3051L Level Transmitter Ordering Information

★ The Standard offering represents the most common options. The starred options (★) should be selected for best delivery.
The Expanded offering is subject to additional delivery lead time.

Product Certifications		
Standard		**Standard**
E5	FM Explosion-proof, Dust Ignition-proof	★
I5	FM Intrinsically Safe, Division 2	★
K5	FM Explosion-proof, Dust Ignition-proof, Intrinsically Safe, and Division 2	★
I1	ATEX Intrinsic Safety and Dust	★
N1	ATEX Type n Certification and Dust	★
E8	ATEX Flameproof and Dust Certification	★
E4	TIIS Flameproof	★
C6	CSA Explosion-proof, Dust Ignition-proof, Intrinsically Safe, and Division 2	★
K6	CSA and ATEX Explosion-proof, Intrinsically Safe, and Division 2 (combination of C6 and K8)	★
KB	FM and CSA Explosion-proof, Dust Ignition-proof, Intrinsically Safe, and Division 2 (combination of K5 and C6)	★
K7	IECEx Flameproof, Dust Ignition-proof, Intrinsic Safety, and Type n (combination of I7, N7 and E7)	★
K8	ATEX Flame-proof and Intrinsic Safety Approvals (combination of I1 and E8)	★
KD	FM, CSA, and ATEX Explosion-proof, Intrinsically Safe (combination of K5, C6, I1, and E8)	★
I7	IECEx Intrinsic Safety	★
E7	IECEx Flameproof, Dust Ignition-proof	★
N7	IECEx Type n Certification	★
IA	ATEX FISCO Intrinsic Safety	★
IE	FM FISCO Intrinsically Safe	★
E2	INMETRO Flameproof	★
I2	INMETRO Intrinsic Safety	★
K2	INMETRO Flameproof, Intrinsic Safety	★
E3	China Flameproof	★
I3	China Intrinsic Safety	★
N3	China Type n	★
Shipboard Approvals		
Standard		**Standard**
SBS	American Bureau of Shipping	★
Bolting Material		
Standard		**Standard**
L4	Austenitic 316 SST Bolts	★
L5	ASTM A 193, Grade B7M bolts	★
L6	Alloy K-500 Bolts	★
L8	ASTM A 193 Class 2, Grade B8M Bolts	★
Display and Interface Options		
Standard		**Standard**
M4[(7)]	LCD Display with Local Operator Interface	★
M5	LCD Display	★
Calibration Certification		
Standard		**Standard**
Q4	Calibration Certificate	★
QP	Calibration Certificate and tamper evident seal	★
QG	Calibration Certificate and GOST Verification Certificate	★
Material Traceability Certification		
Standard		**Standard**
Q8	Material Traceability Certification per EN 10204 3.1	★

Table 6. Rosemount 3051L Level Transmitter Ordering Information

★ The Standard offering represents the most common options. The starred options (★) should be selected for best delivery.
The Expanded offering is subject to additional delivery lead time.

Quality Certification for Safety				
Standard				**Standard**
QS[8]	Prior-use certificate of FMEDA data			★
QT[5][9]	Safety certified to IEC 61508 with certificate of FMEDA			★
Toolkit Total System Performance Reports				
Standard				**Standard**
QZ	Seal System Performance Calculation Report			★
Conduit Electrical Connector				
Standard				**Standard**
GE	M12, 4-pin, Male Connector (eurofast®)			★
GM	A size Mini, 4-pin, Male Connector (minifast®)			★
Configuration Buttons				
Standard				**Standard**
D4[8]	Analog Zero and Span			★
DZ[8]	Digital Zero Trim			★
Transient Protection				
Standard				**Standard**
T1[10]	Transient Protection			★
Software Configuration				
Standard				**Standard**
C1[8]	Custom Software Configuration (Completed CDS 00806-0100-4001 required with order)			★
Alarm Levels				
Standard				**Standard**
C4[8][11]	NAMUR alarm and saturation levels, high alarm			★
CN[8][11]	NAMUR alarm and saturation levels, low alarm			★
CR[5][8]	Custom alarm and saturation signal levels, high alarm (requires C1 and Configuration Data Sheet)			★
CS[5][8]	Custom alarm and saturation signal levels, low alarm (requires C1 and Configuration Data Sheet)			★
CT[5][8]	Low alarm (standard Rosemount alarm and saturation levels)			★
Conduit Plug				
Standard				**Standard**
DO	316 SST Conduit Plug			★
Ground Screw				
Standard				**Standard**
V5[12]	External Ground Screw Assembly			★
Lower Housing Flushing Connection Options				
	Ring Material	**Number**	**Size (NPT)**	
Standard				**Standard**
F1	316 SST	1	1/4-18 NPT	★
F2	316 SST	2	1/4-18 NPT	★
F3	Alloy C-276	1	1/4-18 NPT	★
F4	Alloy C-276	2	1/4-18 NPT	★
F7	316 SST	1	1/2-14 NPT	★
F8	316 SST	2	1/2-14 NPT	★
F9	Alloy C-276	1	1/2-14 NPT	★
F0	Alloy C-276	2	1/2-14 NPT	★

Table 6. Rosemount 3051L Level Transmitter Ordering Information

★ The Standard offering represents the most common options. The starred options (★) should be selected for best delivery.
The Expanded offering is subject to additional delivery lead time.

HART Revision Configuration		
Standard		**Standard**
HR5[5][8][13]	Configured for HART Revision 5	★
HR7[5][8][14]	Configured for HART Revision 7	★
Typical Model Number: 3051L 2 A A0 D 21 A A F1		

(1) HART Revision 5 is the default HART output. The Enhanced 3051 can be factory or field configured to HART Revision 7. To order HART Revision 7 factory configured, add option code HR7.

(2) Option code M4 - LCD Display with Local Operator Interface required for local addressing and configuration.

(3) Materials of Construction comply with metallurgical requirements highlighted within NACE MR0175/ISO 15156 for sour oil field production environments. Environmental limits apply to certain materials. Consult latest standard for details. Selected materials also conform to NACE MR0103 for sour refining environments.

(4) Only valid with FOUNDATION fieldbus Output Code F.

(5) Select Configuration Buttons (option code D4 or DZ) or Local Operator Interface (option code M4) if local configuration buttons are required.

(6) "Assemble-to" items are specified separately and require a completed model number.

(7) Not available with FOUNDATION fieldbus (Output Code F).

(8) Only Available with standard 3051 4-20mA HART.

(9) Only available with HART 4-20 mA output (output code A).

(10) The T1 option is not needed with FISCO Product Certifications; transient protection is included in the FISCO product certification codes IA, IE, IF, and IG.

(11) NAMUR-Compliant operation is pre-set at the factory and cannot be changed to standard operation in the field for the standard 3051.

(12) The V5 option is not needed with the T1 option; external ground screw assembly is included with the T1 option.

(13) Configures the HART output to HART Revision 5. The device can be field configured to HART Revision 7 if needed.

(14) Configures the HART output to HART Revision 7. The device can be field configured to HART Revision 5 if needed.

Specifications

PERFORMANCE SPECIFICATIONS

This product data sheet covers HART, FOUNDATION fieldbus and PROFIBUS PA protocols unless specified.

Conformance To Specification (±3σ (Sigma))

Technology leadership, advanced manufacturing techniques and statistical process control ensure specification conformance to at least ±3σ.

Reference Accuracy

Stated reference accuracy equations include terminal based linearity, hysteresis, and repeatability.

For FOUNDATION fieldbus and PROFIBUS PA devices, use calibrated range in place of span.

Models	3051		Enhanced 3051
	Standard	**High Accuracy Option(1)**	
3051C Ranges 2-5	±0.065% of span For spans less than 10:1, accuracy = $\pm\left[0.015 + 0.005\left(\frac{URL}{Span}\right)\right]$% of Span	Ranges 2-5 High Accuracy Option, P8 ±0.04% of span For spans less than 5:1, accuracy = $\pm\left[0.015 + 0.005\left(\frac{URL}{Span}\right)\right]$% of Span	+ 0.04% of span For spans less than 10:1 accuracy = $\pm\left[0.015 + 0.005\left(\frac{URL}{Span}\right)\right]$% of Span
Range 1	±0.10% of span For spans less than 15:1, accuracy = $\pm\left[0.025 + 0.005\left(\frac{URL}{Span}\right)\right]$% of Span	NA	+ 0.10% of span For spans less than 15:1 accuracy = $\pm\left[0.025 + 0.005\left(\frac{URL}{Span}\right)\right]$% of Span
Range 0 (CD)	±0.10% of span For spans less than 2:1, accuracy = ±0.05% of URL	NA	+ 0.10% of span For spans less than 2:1 accuracy = + 0.05% of URL
3051CA Ranges 1-4	±0.065% of span For spans less than 10:1, accuracy = $\pm\left[0.0075\left(\frac{URL}{Span}\right)\right]$% of Span	Ranges 2-4 High Accuracy Option, P8 ±0.04% of span For spans less than 5:1, accuracy = $\pm\left[0.0075\left(\frac{URL}{Span}\right)\right]$% of Span	+ 0.04% of span For spans less than 10:1 accuracy = $\pm\left[0.0075\left(\frac{URL}{Span}\right)\right]$% of Span
3051T Ranges 1-4	±0.065% of span For spans less than 5:1, $\text{accuracy} = \pm\left[0.0075\left(\frac{URL}{Span}\right)\right]$% of Span	Ranges 2-4 High Accuracy Option, P8 ±0.04% of span For spans less than 5:1, accuracy = $\pm\left[0.0075\left(\frac{URL}{Span}\right)\right]$% of Span	+ 0.04% of span For spans less than 10:1 accuracy = $\pm\left[0.0075\left(\frac{URL}{Span}\right)\right]$% of Span
Range 5	±0.075% of span For spans less than 10:1, accuracy = $\pm\left[0.0075\left(\frac{URL}{Span}\right)\right]$% of Span	NA	+ 0.075% of span For Spans less than 10:1 accuracy = $\pm\left[0.0075\left(\frac{URL}{Span}\right)\right]$% of Span
3051L Ranges 2-4	±0.075% of span For spans less than 10:1, accuracy = $\pm\left[0.025 + 0.005\left(\frac{URL}{Span}\right)\right]$% of Span	NA	+ 0.075% of span For spans less than 10:1 accuracy = $\pm\left[0.025 + 0.005\left(\frac{URL}{Span}\right)\right]$% of Span

(1) High accuracy option P8 is not required for the Enhanced 3051.

Flow Performance - Flow Reference Accuracy

3051CFA Annubar Flowmeter (for 3051 and enhanced 3051)		
Ranges 2-3		±1.60% of Flow Rate at 8:1 flow turndown
3051CFC Compact Orifice Flowmeter – Conditioning Option C		
Ranges 2-3	β =0.4	±1.75% of Flow Rate at 8:1 flow turndown
	β =0.65	±1.95% of Flow Rate at 8:1 flow turndown
3051CFC Compact Orifice Flowmeter – Orifice Type Option P(1)		
Ranges 2-3	β =0.4	±2.00% of Flow Rate at 8:1 flow turndown
	β =0.65	±2.00% of Flow Rate at 8:1 flow turndown
3051CFP Integral Orifice Flowmeter		
Ranges 2-3	β <0.1	±3.00% of Flow Rate at 8:1 flow turndown
	0.1< β <0.2	±1.95% of Flow Rate at 8:1 flow turndown
	0.2< β <0.6	±1.75% of Flow Rate at 8:1 flow turndown
	0.6< β <0.8	±2.15% of Flow Rate at 8:1 flow turndown

(1) For smaller line sizes, see Rosemount Compact Orifice

Total Performance

Total Performance is based on combined errors of reference accuracy, ambient temperature effect, and static pressure effect.

For ±50 °F (28 °C) temperature changes, up to 1000 psi (6,9 MPa) line pressure (CD only), from 1:1 to 5:1 rangedown.

Models	3051 Standard	Enhanced 3051
3051C Ranges 2-5	±0.15% of span	+ 0.12% of span
3051T Ranges 1-4	±0.15% of span	+ 0.12% of span

Long Term Stability

Models	Long Term Stability (for 3051 and enhanced 3051)
3051C Ranges 2-5	±0.125% of URL for 5 years ±50 °F (28 °C) temperature changes, and up to 1000 psi (6.9 MPa) line pressure.
3051CD, 3051CG Low/Draft Range Ranges 0-1	±0.2% of URL for 1 year
3051CA Low Range Range 1	±0.125% of URL for 5 years ±50 °F (28 °C) temperature changes, and up to 1000 psi (6.9 MPa) line pressure.
3051T Ranges 1-5	±0.125% of URL for 5 years ±50 °F (28 °C) temperature changes, and up to 1000 psi (6.9 MPa) line pressure.

Dynamic Performance

	4 - 20 mA HART[1]	FOUNDATION fieldbus and PROFIBUS PA protocols[3]	Typical HART Transmitter Response Time
Total Response Time ($T_d + T_c$)[2]:			
3051C, Ranges 2-5:	100 ms	152 ms	
Range 1:	255 ms	307 ms	
Range 0:	700 ms	N/A	
3051T:	100 ms	152 ms	
3051L:	See Instrument Toolkit®	See Instrument Toolkit	
Dead Time (Td)	45 ms (nominal)	97 ms	
Update Rate	22 times per second	22 times per second	

(1) Dead time and update rate apply to all models and ranges; analog output only
(2) Nominal total response time at 75 °F (24 °C) reference conditions.
(3) Transducer block response time, Analog Input block execution time not included.

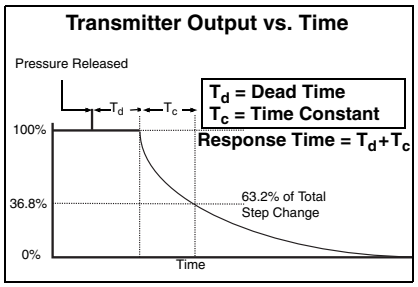

Line Pressure Effect per 1000 psi (6,9 MPa)

For line pressures above 2000 psi (13,7 MPa) and Ranges 4-5, see user manual (Document number 00809-0100-4007 for enhanced 3051 HART, 00809-0100-4001 for HART, 00809-0100-4774 for FOUNDATION™ fieldbus, and 00809-0100-4797 for PROFIBUS PA).

Models	Line Pressure Effect (for 3051 and enhanced 3051)
3051CD, 3051CF	Zero Error
Ranges 2-3	±0.05% of URL/1000 psi (68.9 bar) for line pressures from 0 to 2000 psi (0 to 13.7 MPa)
Range 1	±0.25% of URL/1000 psi (68.9 bar)
Range 0	±0.125% of URL/100 psi (6.89 bar)
	Span Error
Ranges 2-3	±0.1% of reading/1000 psi (68.9 bar)
Range 1	±0.4% of reading/1000 psi (68.9 bar)
Range 0	±0.15% of reading/100 psi (6.89 bar)

Ambient Temperature Effect per 50°F (28°C)

Models	Ambient Temperature Effect (for 3051 and enhanced 3051)
3051C	
Ranges 2-5	±(0.0125% URL + 0.0625% span) from 1:1 to 5:1 ±(0.025% URL + 0.125% span) from 5:1 to 150:1
Range 1	±(0.1% URL + 0.25% span) from 1:1 to 30:1
Range 0	±(0.25% URL + 0.05% span) from 1:1 to 30:1
3051CA	
Ranges 1-4	±(0.025% URL + 0.125% span) from 1:1 to 30:1
	±(0.035% URL + 0.125% span) from 30:1 to 150:1
3051T	
Range 2-4	±(0.025% URL + 0.125% span) from 1:1 to 30:1 ±(0.035% URL + 0.125% span) from 30:1 to 150:1
Range 1	±(0.025% URL + 0.125% span) from 1:1 to 10:1 ±(0.05% URL + 0.125% span) from 10:1 to 150:1
Range 5	±(0.1% URL + 0.15% span)
3051L	See Instrument Toolkit software.

Mounting Position Effects

Models	Mounting Position Effects (for 3051 and enhanced 3051)
3051C	Zero shifts up to ±1.25 inH_2O (3.11 mbar), which can be calibrated out. No span effect.
3051CA, 3051T	Zero shifts up to 2.5 inH_2O (6.22 mbar), which can be calibrated out. No span effect.
3051L	With liquid level diaphragm in vertical plane, zero shift of up to 1 inH_2O (2.49 mbar). With diaphragm in horizontal plane, zero shift of up to 5 inH_2O (12.43 mbar) plus extension length on extended units. All zero shifts can be calibrated out. No span effect.

Vibration Effect

Less than ±0.1% of URL when tested per the requirements of IEC60770-1: 1999 field or pipeline with high vibration level (10-60 Hz 0.21 mm displacement peak amplitude / 60-2000 Hz 3g).

Power Supply Effect

Less than ±0.005% of calibrated span per volt.

Electromagnetic Compatibility (EMC)

Meets all relevant requirements of EN 61326 and Namur NE-21.

Transient Protection (Option Code T1)

Meets IEEE C62.41, Category Location B

6 kV crest (0.5 μs - 100 kHz)
3 kA crest (8 × 20 microseconds)
6 kV crest (1.2 × 50 microseconds)

FUNCTIONAL SPECIFICATIONS

Service

Liquid, gas, and vapor applications

Range and Sensor Limits

Table 7. 3051CD, 3051CG, 3051CF, and 3051L Range and Sensor Limits

Range	Minimum Span	Range and Sensor Limits				
	3051CD(1), 3051CG, 3051CF, 3051L	Upper (URL)	Lower (LRL)			
			3051CD Differential 3051CF Flowmeters	3051CG Gage	3051L Differential	3051LGage
0	0.1 inH_2O (0,25 mbar)	3.0 inH_2O (7,47 mbar)	-3.0 inH_2O (-7,47 mbar)	NA	NA	NA
1	0.5 inH_2O (1,2 mbar)	25 inH_2O (62,3 mbar)	-25 inH_2O (-62,1 mbar)	-25 inH_2O (-62,1 mbar)	NA	NA
2	1.6 inH_2O (4,1 mbar)	250 inH_2O (0,62 bar)	-250 inH_2O (-0,62 bar)	-250 inH_2O (-0,62 bar)	-250 inH_2O (-0,62 bar)	-250 inH_2O (-0,62 bar)
3	6.6 inH_2O (16,6 mbar)	1000 inH_2O (2,49 bar)	-1000 inH_2O (-2,49 bar)	0.5 psia (34,5 mbar abs)	-1000 inH_2O (-2,49 bar)	0.5 psia (34,5 mbar abs)
4	2 psi (0,14 bar)	300 psi (20,6 bar)	-300 psi (-20,6 bar)	0.5 psia (34,5 mbar abs)	-300 psi (-20,6 bar)	0.5 psia (34,5 mbar abs)
5	13.3 psi (0,91 bar)	2000 psi (137,9 bar)	- 2000 psi (-137,9 bar)	0.5 psia (34,5 mbar abs)	NA	NA

(1) Range 0 only available with 3051CD. Range 1 only available with 3051CD, 3051CG, or 3051CF. Range 5 not available with 3051L Differential and 3051 Gage.

Table 8. 3051CA and 3051T Range and Sensor Limits

Range	3051CA			Range	3051T			
	Minimum Span	Range and Sensor Limits			Minimum Span	Range and Sensor Limits		Lower(1) (LRL) (Gage)
		Upper (URL)	Lower (LRL)			Upper (URL)	Lower (LRL)	
1	0.3 psia (20,6 mbar)	30 psia (2,07 bar)	0 psia (0 bar)	1	0.3 psi (20,6 mbar)	30 psi (2,07 bar)	0 psia (0 bar)	-14.7 psig (-1,01 bar)
2	1 psia (0,068 bar)	150 psia (10,3 bar)	0 psia (0 bar)	2	1 psi (0,068 bar)	150 psi (10,3 bar)	0 psia (0 bar)	-14.7 psig (-1,01 bar)
3	5.3 psia (0,36 bar)	800 psia (55,2 bar)	0 psia (0 bar)	3	5.3 psi (0,36 bar)	800 psi (55,2 bar)	0 psia (0 bar)	-14.7 psig (-1,01 bar)
4	26.6 psia (1,83 bar)	4000 psia (275,8 bar)	0 psia (0 bar)	4	26.6 psi (1,83 bar)	4000 psi (275,8 bar)	0 psia (0 bar)	-14.7 psig (-1,01 bar)
				5	2000 psi (137,9 bar)	10000 psi (689,4 bar)	0 psia (0 bar)	-14.7 psig (-1,01 bar)

(1) Assumes atmospheric pressure of 14.7 psig.

4-20 mA HART (Output Code A)

Power Supply

External power supply required. Standard transmitter (4-20mA) operates on 10.5-42.4 Vdc with no load

Load Limitations

Maximum loop resistance is determined by the voltage level of the external power supply described by:

Max. Loop Resistance = 43.5 (Power Supply Voltage – 10.5)

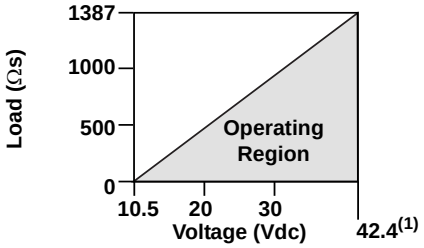

Communication requires a minimum loop resistance of 250 ohms.

(1) For CSA approval, power supply must not exceed 42.4 V.

Indication

Optional two line LCD/LOI Display

Zero and Span Adjustment Requirements

Zero and span values can be set anywhere within the range limits stated in Table 7 and Table 8.

Span must be greater than or equal to the minimum span stated in Table 7 and Table 8.

Output

Two-wire 4-20mA, user selectable for linear or square root output. Digital process variable superimposed on 4-20 mA signal, available to any host that conforms to HART protocol.

3051

Digital communications based on HART Revision 5 protocol.

Enhanced 3051

The enhanced 3051 comes with Selectable HART Revisions. Digital communications based on HART Revision 5 (default) or Revision 7 (option code HR7) protocol can be selected. The HART revision can be switched in the field using any HART based configuration tool or the optional local operator interface (LOI).

Enhanced 3051 Features

Power Advisory Diagnostics

Power Advisory Diagnostics proactively detect and notify you of degraded electrical loop integrity before it can affect your process operation. Example loop problems that can be detected include water in the terminal compartment, corrosion of terminals, improper grounding, and unstable power supplies.

The Device Dashboard presents the diagnostics in a graphical, task-based interface that provides single-click access to critical process/device information and descriptive graphical troubleshooting.

Local Operator Interface

The LOI utilizes a 2 button menu with internal and external configuration buttons. Internal buttons are always configured for Local Operator Interface. External Buttons can be configured for either LOI, (option code M4), Analog Zero and Span (option code D4) or Digital Zero Trim (option code DZ). See enhanced 3051 product manual (00809-0100-4007) for LOI configuration menu.

FOUNDATION fieldbus (Output code F)

Power Supply

External power supply required; transmitters operate on 9.0 to 32.0 V dc transmitter terminal voltage.

Current Draw

17.5 mA for all configurations (including LCD display option)

Indication

Optional two line LCD display

FOUNDATION fieldbus Function Block Execution Times

Block	Execution Time
Resource	-
Transducer	-
LCD Block	-
Analog Input 1, 2	30 milliseconds
PID	45 milliseconds
Input Selector	30 milliseconds
Arithmetic	35 milliseconds
Signal Characterizer	40 milliseconds
Integrator	35 milliseconds

FOUNDATION fieldbus Parameters

Schedule Entries	7 (max.)
Links	20 (max.)
Virtual Communications Relationships (VCR)	12 (max.)

Standard Function Blocks

Resource Block

Contains hardware, electronics, and diagnostic information.

Transducer Block

Contains actual sensor measurement data including the sensor diagnostics and the ability to trim the pressure sensor or recall factory defaults.

LCD Block

Configures the local display.

2 Analog Input Blocks

Processes the measurements for input into other function blocks. The output value is in engineering units or custom and contains a status indicating measurement quality.

PID Block

Contains all logic to perform PID control in the field including cascade and feedforward.

Backup Link Active Scheduler (LAS)

The transmitter can function as a Link Active Scheduler if the current link master device fails or is removed from the segment.

Advanced Control Function Block Suite (Option Code A01)

Input Selector Block

Selects between inputs and generates an output using specific selection strategies such as minimum, maximum, midpoint, average or first “good.”

Arithmetic Block

Provides pre-defined application-based equations including flow with partial density compensation, electronic remote seals, hydrostatic tank gauging, ratio control and others.

Signal Characterizer Block

Characterizes or approximates any function that defines an input/output relationship by configuring up to twenty X, Y coordinates. The block interpolates an output value for a given input value using the curve defined by the configured coordinates.

Integrator Block

Compares the integrated or accumulated value from one or two variables to pre-trip and trip limits and generates discrete output signals when the limits are reached. This block is useful for calculating total flow, total mass, or volume over time.

FOUNDATION fieldbus Diagnostics Suite (Option Code D01)

The 3051C FOUNDATION fieldbus Diagnostics provide Abnormal Situation Prevention (ASP) indication. The integral statistical process monitoring (SPM) technology calculates the mean and standard deviation of the process variable 22 times per second. The 3051C ASP algorithm uses these values and highly flexible configuration options for customization to many user-defined or application specific abnormal situations. The detection of plugged impulse lines is the first available predefined application.

PROFIBUS PA (Output Code W)

Profile Version

3.02

Power Supply

External power supply required; transmitters operate on 9.0 to 32.0 V dc transmitter terminal voltage.

Current Draw

17.5 mA for all configurations (including LCD display option)

Output Update Rate

Four times per second

Standard Function Blocks

Analog Input (AI Block)

The AI function block processes the measurements and makes them available to the host device. The output value from the AI block is in engineering units and contains a status indicating the quality of the measurement.

Physical Block

The physical block defines the physical resources of the device including type of memory, hardware, electronics and diagnostic information.

Transducer Block

Contains actual sensor measurement data including the sensor diagnostics and the ability to trim the pressure sensor or recall factory defaults.

Indication

Optional two line LCD display

Local Operator Interface

The LOI utilizes a 2 button menu with external configuration buttons.

Overpressure Limits

Rosemount 3051CD/CG/CF

- Range 0: 750 psi (51,7 bar)
- Range 1: 2000 psig (137,9 bar)
- Ranges 2-5: 3626 psig (250 bar)
  4500 psig (310,3 bar) for option code P9

Rosemount 3051CA

- Range 1: 750 psia (51,7 bar)
- Range 2: 1500 psia (103,4 bar)
- Range 3: 1600 psia (110,3 bar)
- Range 4: 6000 psia (413,7 bar)

Rosemount 3051TG/TA

- Range 1: 750 psi (51,7 bar)
- Range 2: 1500 psi (103,4 bar)
- Range 3: 1600 psi (110,3 bar)
- Range 4: 6000 psi (413,7 bar)
- Range 5: 15000 psi (1034,2 bar)

For 3051L or Level Flange Option Codes FA, FB, FC, FD, FP, and FQ, limit is 0 psia to the flange rating or sensor rating, whichever is lower.

Table 9. 3051L and Level Flange Rating Limits

Standard	Type	CS Rating	SST Rating
ANSI/ASME	Class 150	285 psig	275 psig
ANSI/ASME	Class 300	740 psig	720 psig
ANSI/ASME	Class 600	1480 psig	1440 psig
At 100 °F (38 °C), the rating decreases with increasing temperature, per ANSI/ASME B16.5.			
DIN	PN 10-40	40 bar	40 bar
DIN	PN 10/16	16 bar	16 bar
DIN	PN 25/40	40 bar	40 bar
At 248 °F (120 °C), the rating decreases with increasing temperature, per DIN 2401.			

Static Pressure Limit

Rosemount 3051CD Only

Operates within specifications between static line pressures of 0.5 psia and 3626 psig (4500 psig (310, 3 bar) for Option Code P9).

Range 0: 0.5 psia and 750 psig (3, 4 bar and 51, 7 bar)

Range 1: 0.5 psia and 2000 psig (3, 4 bar and 137, 9 bar)

Burst Pressure Limits

3051C, 3051CF Coplanar or Traditional process flange

10000 psig (69 MPa)

3051T Inline

Ranges 1-4: 11000 psi (75,8 MPa)

Range 5: 26000 psig (179 MPa)

Failure Mode Alarm

If self-diagnostics detect a sensor or microprocessor failure, the analog signal is driven either high or low to alert the user. High or low failure mode is user-selectable with a jumper/switch on the transmitter. The values to which the transmitter drives its output in failure mode depend on whether it is configured to *standard, NAMUR-compliant,* or custom levels (see Alarm Configuration below). The values for each are as follows:

	High Alarm	Low Alarm
Default	≥ 21.75 mA	≤ 3.75 mA
NAMUR compliant(1)	≥ 22.5 mA	≤ 3.6 mA
Custom levels(2)	20.2 - 23.0 mA	3.4 - 3.8 mA

(1) Analog output levels are compliant with NAMUR recommendation NE 43, see option codes C4 or C5.

(2) Low alarm must be 0.1 mA less than low saturation and high alarm must be 0.1 mA greater than high saturation.

Output Code F and W

If self-diagnostics detect a gross transmitter failure, that information gets passed as a status along with the process variable.

Temperature Limits

Ambient

-40 to 185 °F (-40 to 85 °C)

With LCD display(1): -40 to 175 °F (-40 to 80 °C)

(1) For the standard 3051, LCD display may not be readable and LCD updates will be slower at temperatures below -22 °F (-30 °C).

Storage(1)

-50 to 230 °F (-46 to 110 °C)

With LCD display: -40 to 185 °F (-40 to 85 °C)

(1) If storage temperature is above 85°C, perform a sensor trim prior to installation.

Process

At atmospheric pressures and above. See Table 10.

Table 10. 3051 Process Temperature Limits

3051CD, 3051CG, 3051CF, 3051CA	
Silicone Fill Sensor(1)	
with Coplanar Flange	–40 to 250 °F (–40 to 121 °C)(2)
with Traditional Flange	–40 to 300 °F (–40 to 149 °C)(2)(3)
with Level Flange	–40 to 300 °F (–40 to 149 °C)(2)
with 305 Integral Manifold	–40 to 300 °F (–40 to 149 °C)(2)
Inert Fill Sensor(1)	0 to 185 °F (–18 to 85 °C)(4)(5)
3051T (Process Fill Fluid)	
Silicone Fill Sensor(1)	–40 to 250 °F (–40 to 121 °C)(2)
Inert Fill Sensor(1)	–22 to 250 °F (–30 to 121 °C)(2)
3051L Low-Side Temperature Limits	
Silicone Fill Sensor(1)	–40 to 250 °F (–40 to 121 °C)(2)
Inert Fill Sensor(1)	0 to 185 °F (–18 to 85 °C)(2)
3051L High-Side Temperature Limits (Process Fill Fluid)	
Syltherm® XLT	–100 to 300 °F (–73 to 149 °C)
D.C. Silicone 704®	32 to 400 °F (0 to 205 °C)
D.C. Silicone 200	–40 to 400 °F (–40 to 205 °C)
Inert	–50 to 350 °F (–45 to 177 °C)
Glycerin and Water	0 to 200 °F (–18 to 93 °C)
Neobee M-20	0 to 400 °F (–18 to 205 °C)
Propylene Glycol and Water	0 to 200 °F (–18 to 93 °C)

(1) Process temperatures above 185 °F (85 °C) require derating the ambient limits by a 1.5:1 ratio.

(2) 220 °F (104 °C) limit in vacuum service; 130 °F (54 °C) for pressures below 0.5 psia.

(3) 3051CD0 process temperature limits are –40 to 212 °F (–45 to 100 °C)

(4) 160 °F (71 °C) limit in vacuum service.

(5) Not available for 3051CA.

Humidity Limits

0–100% relative humidity

Turn-On Time

Performance within specifications less than 2.0 seconds (10.0 s for PROFIBUS PA protocol) after power is applied to the transmitter.

Volumetric Displacement

Less than 0.005 in^3 (0,08 cm^3)

Damping

4-20 mA HART

Enhanced 3051

Analog output response to a step input change is user-enterable from 0.0 to 60 seconds for one time constant. This software damping is in addition to sensor module response time.

Standard 3051

Analog output response to a step input change is user-selectable from 0 to 36 seconds for one time constant. This software damping is in addition to sensor module response time.

FOUNDATION fieldbus

Transducer block: 0.4 seconds fixed

AI Block: User configurable

PROFIBUS PA

AI Block only: User configurable

PHYSICAL SPECIFICATIONS

Electrical Connections

1/2–14 NPT, G1/2, and M20 × 1.5 conduit. *HART* interface connections fixed to terminal block for output code A.

Process Connections

Rosemount 3051C

1/4–18 NPT on 2 1/8-in. centers

1/2–14 NPT on 2-, 2 1/8-, or 2 1/4-in. centers

Rosemount 3051L

High pressure side: 2-, 3-, or 4-in., ASME B 16.5 (ANSI) Class 150, 300 or 600 flange; 50, 80 or 100 mm, PN 40 or 10/16 flange

Low pressure side: 1/4–18 NPT on flange 1/2–14 NPT on adapter

Rosemount 3051T

1/2–14 NPT female. A DIN 16288 Male (available in SST for Range 1–4 transmitters only), or Autoclave type F-250-C (Pressure relieved 9/16–18 gland thread; 1/4 OD high pressure tube 60° cone; available in SST for Range 5 transmitters only).

Rosemount 3051CF

For 3051CFA, see 00813-01000-4485 Rosemount 485 Annubar

For 3051CFC, see 00813-01000-4485 Rosemount 405 Compact Orifice Plate

For 3051CFP, see 00813-01000-4485 Rosemount 1195 Integral Orifice

Process-Wetted Parts

Drain/Vent Valves

316 SST, Alloy C-276, or Alloy 400 material (Alloy 400 not available with 3051L)

Process Flanges and Adapters

Plated carbon steel, SST cast CF-8M (cast version of 316 SST, material per ASTM-A743), C-Type cast alloy CW12MW, or cast alloy M30C

Wetted O-rings

Glass-filled PTFE or Graphite-filled PTFE

Process Isolating Diaphragms

Isolating Diaphragm Material	3051CD 3051CG	3051T	3051CA
316L SST	•	•	•
Alloy C-276	•	•	•
Alloy 400	•		•
Tantalum	•		
Gold-plated Alloy 400	•		•
Gold-plated SST	•		•

Rosemount 3051L Process Wetted Parts

Flanged Process Connection (Transmitter High Side)

Process Diaphragms, Including Process Gasket Surface

316L SST, Alloy C-276, or Tantalum

Extension

CF-3M (Cast version of 316L SST, material per ASTM-A743), or Alloy C-276. Fits schedule 40 and 80 pipe.

Mounting Flange

Zinc-cobalt plated CS or SST

Reference Process Connection (Transmitter Low Side)

Isolating Diaphragms

316L SST or Alloy C-276

Reference Flange and Adapter

CF-8M (Cast version of 316 SST, material per ASTM-A743)

Non-Wetted Parts

Electronics Housing

Low-copper aluminum or CF-8M (Cast version of 316 SST).
Enclosure Type 4X, IP 65, IP 66, IP 68

Coplanar Sensor Module Housing

CF-3M (Cast version of 316L SST, material per ASTM-A743)

Bolts

ASTM A449, Type 1 (zinc-cobalt plated carbon steel)
ASTM F593G, Condition CW1 (Austenitic 316 SST)
ASTM A193, Grade B7M (zinc plated alloy steel)
Alloy K-500

Sensor Module Fill Fluid

Coplanar uses Silicone or inert Halocarbon
In-line series uses silicone Fluorinert® FC-43

Process Fill Fluid (3051L only)

Syltherm XLT, D.C. Silicone 704,
D.C. Silicone 200, inert, glycerin and water, Neobee M-20 or propylene glycol and water

Paint

Polyurethane

Cover O-rings

Buna-N

Shipping Weights

Table 11. Transmitter Weights without Options

Transmitter	Add Weight In lb. (kg)
3051C	6.0 (2,7)
3051T	3.0 (1,4)
3051L	Table 12 on page 46

Table 12. 3051L Weights without Options

Flange	Flush lb. (kg)	2-in. Ext. lb. (kg)	4-in. Ext. lb. (kg)	6-in. Ext. lb. (kg)
2-in., 150	12.5 (5,7)	—	—	—
3-in., 150	17.5 (7,9)	19.5 (8,8)	20.5 (9,3)	21.5 (9,7)
4-in., 150	23.5 (10,7)	26.5 (12,0)	28.5 (12,9)	30.5 (13,8)
2-in., 300	17.5 (7,9)	—	—	—
3-in., 300	22.5 (10,2)	24.5 (11,1)	25.5 (11,6)	26.5 (12,0)
4-in., 300	32.5 (14,7)	35.5 (16,1)	37.5 (17,0)	39.5 (17,9)
2-in., 600	15.3 (6,9)	—	—	—
3-in., 600	25.2 (11,4)	27.2 (12,3)	28.2 (12,8)	29.2 (13,2)
DN 50/PN 40	13.8 (6,2)	—	—	—
DN 80/PN 40	19.5 (8,8)	21.5 (9,7)	22.5 (10,2)	23.5 (10,6)
DN 100/ PN 10/16	17.8 (8,1)	19.8 (9,0)	20.8 (9,5)	21.8 (9,9)
DN 100/ PN 40	23.2 (10,5)	25.2 (11,5)	26.2 (11,9)	27.2 (12,3)

Table 13. Transmitter Option Weights

Code	Option	Add lb. (kg)
J, K, L, M	Stainless Steel Housing (T)	3.9 (1,8)
J, K, L, M	Stainless Steel Housing (C, L, H, P)	3.1 (1,4)
M4/M5	LCD display	0.5 (0,2)
B4	SST Mounting Bracket for Coplanar Flange	1.0 (0,5)
B1, B2, B3	Mounting Bracket for Traditional Flange	2.3 (1,0)
B7, B8, B9	Mounting Bracket for Traditional Flange	2.3 (1,0)
BA, BC	SST Bracket for Traditional Flange	2.3 (1,0)
H2	Traditional Flange	2.4 (1,1)
H3	Traditional Flange	2.7 (1,2)
H4	Traditional Flange	2.6 (1,2)
H7	Traditional Flange	2.5 (1,1)
FC	Level Flange—3 in., 150	10.8 (4,9)
FD	Level Flange—3 in., 300	14.3 (6,5)
FA	Level Flange—2 in., 150	10.7 (4,8)
FB	Level Flange—2 in., 300	14.0 (6,3)
FP	DIN Level Flange, SST, DN 50, PN 40	8.3 (3,8)
FQ	DIN Level Flange, SST, DN 80, PN 40	13.7 (6,2)

Product Certifications

Approved Manufacturing Locations

Rosemount Inc. — Chanhassen, Minnesota USA
Emerson Process Management GmbH & Co. — Wessling, Germany
Emerson Process Management Asia Pacific Private Limited — Singapore
Beijing Rosemount Far East Instrument Co., LTD — Beijing, China
Emerson Process Management LTDA — Sorocaba, Brazil
Emerson Process Management (India) Pvt. Ltd. — Daman, India

European Directive Information

The EC declaration of conformity for all applicable European directives for this product can be found on the Rosemount website at www.rosemount.com. A hard copy may be obtained by contacting an Emerson Process Management representative.

Ordinary Location Certification for Factory Mutual

As standard, the transmitter has been examined and tested to determine that the design meets basic electrical, mechanical, and fire protection requirements by FM, a nationally recognized testing laboratory (NRTL) as accredited by the Federal Occupational Safety and Health Administration (OSHA).

HART PROTOCOL

Hazardous Locations Certifications

North American certifications

FM approvals

E5 Explosion-Proof and Dust Ignition Proof
Certificate No: 0T2H0.AE
Applicable Standards: FM Class 3600 – 1998, FM Class 3615 – 2006, FM Class 3810 – 2005, ANSI/NEMA 250 - 2003

Markings: Explosion-Proof for Class I, Division 1, Groups B, C, and D.

Dust-Ignition-Proof for Class II, Division 1, Groups E, F, G; and Class III, Division 1.
T5 (Ta = 85 °C), Factory Sealed, Enclosure Type 4x

I5 Intrinsically Safe and Non-Incendive
Certificate No: 1Q4A4.AX
Applicable Standards: FM Class 3600 – 1998, FM Class 3610 – 2010, FM Class 3611 – 200, FM Class 3810 – 2005, ANSI/NEMA 250 - 2003
Markings: Intrinsically Safe for use in Class I, Division 1, Groups A, B, C, and D; Class II, Division 1, Groups E, F, and G; Class III, Division 1 when connected per Rosemount drawing 03031-1019 and 00375-1130 (When used with a Field Communicator); Non-incendive for Class I, Division 2, Groups A, B, C, and D.
Temperature Code: T4 (Ta = 40 °C), T3 (Ta = 85 °C), Enclosure Type 4x

Special Conditions for Safe Use (X):

1. The Model 3051 transmitter housing contains aluminum and is considered a potential risk of ignition by impact or friction. Care must be taken into account during installation and use to prevent impact and friction.
2. The Model 3051 transmitter with the transient terminal block (Option code T1) will not pass the 500Vrms dielectric strength test and this must be taken into account during installation.

CSA international

All CSA hazardous location approved transmitters are certified to ANSI/ISA 12.27.02-2003.

E6 Explosion-Proof, Dust Ignition Proof and Class I Division 2
Certificate No.: 1053834
Applicable Standards: CSA Std. C22.2 No. 142 – M1987, CSA Std. C22.2 No. 30 – M1986, CSA Std. C22.2 No. 213 – M1987, ANSI/ISA 12.27.02-2003
Markings: Explosion-Proof for Class I, Division 1, Groups B, C, and D. Dust-Ignition-Proof for
Class II and Class III, Division 1, Groups E, F, and G.
Suitable for Class I, Division 2
Groups A, B, C, and D. Enclosure type 4X,factory sealed.
Single Seal (See Drawing 03031-1053)

I6 Intrinsically Safe
Certificate No.: 1053834
Applicable Standards: CSA Std. C22.2 No. 142 – M1987,CSA Std. C22.2 No. 157 – 92, ANSI/ISA 12.27.02-2003
Markings: Intrinsically safe for Class I, Division 1, Groups A, B, C, and D when connected in accordance with Rosemount drawings 03031-1024. Temperature Code T3C. Enclosure Type 4X, Single Seal. Single Seal (See Drawing 03031-1053)

European certifications

E8 ATEX Flame-Proof and Dust
Certification No.: KEMA 00ATEX2013X
Applicable Standards: EN60079-0: 2006, EN60079-1: 2007, EN60079-26: 2007, EN61241-0: 2006, EN61241-1:2004
Markings: Ex II 1/2 GD, Ex d IIC T6 (–50 ≤ Ta ≤ 65 °C), Ex d IIC T5 (–50 ≤ Ta ≤ 80 °C), Ex tD A20/A21 T90 °C, IP66
CE 1180

I1 ATEX Intrinsic Safety and Dust
Certificate No.: BAS 97ATEX1089X
Applicable Standards: EN 60079-0: 2009, EN60079-11: 2007, EN60079-31: 2009,
Markings: Ex II 1 GD, Ex ia IIC T4 Ga (–60 ≤ Ta ≤ +70 °C), Ex ia IIC T5 Ga (–60 ≤ Ta ≤ +40 °C)
Ex t IIIC T50 °C T_{500} 60°C Da, Ui = 30 V Ii = 200 mA Pi = 0.9 W Ci = 0.012 µF, IP66,
CE 1180

Special Conditions for Safe Use (X):

1. The apparatus is not capable of withstanding the 500 V insulation test required by clause 6.3.12 of EN 60079-11:2007. This must be taken into account when installing the apparatus.
2. The enclosure may be made of aluminum alloy and given a protective polyurethane paint finish; however care should be taken to protect it from impact or abrasion if located in Zone 0.

N1 ATEX Non-incendive/Type n and Dust
Certification No.: BAS 00ATEX3105X
Applicable Standards: EN 60079-0: 2006, EN60079-15: 2005, EN60079-31: 2009
Markings: ⟨Ex⟩ II 3 GD, Ex nA nL IIC T5 (–40 ≤ Ta ≤ 70 °C), Ex t IIIC T50 °C T_{500} 60°C Da, IP66
CE 1180

Specific Conditions for Safe Use (X):

1. The apparatus is not capable of withstanding the 500 V insulation test required by clause 6.8.1 of EN 60079-15:2005. This must be taken into account when installing the apparatus.
2. This device contains a thin wall diaphragm. Installation, maintenance, and use shall take into account the environmental conditions to which the diaphragm will be subjected. The manufacturer's instructions for installation and maintenance shall be followed in detail to assure safety during its expected lifetime. In case of repair, contact the manufacturer for more information on the dimensions of the flameproof joints.

Japanese certifications

E4 TIIS Flame-Proof

Certificate	Description
TC15850	3051C/D/1 4–20 mA HART — no meter
TC15851	3051C/D/1 4–20 mA HART — with meter
TC15854	3051T/G/1 4–20 mA HART, SST, Silicon — no meter
TC15855	3051T/G/1 4–20 mA HART, Alloy C-276, Silicon — no meter
TC15856	3051T/G/1 4–20 mA HART, SST, Silicon — with meter
TC15857	3051T/G/1 4–20 mA HART, Alloy C-276, Silicon — with meter

Markings: Ex d IIC T6

I4 TIIS Intrinsic Safety
Certification No.: TC16406
Markings: Ex ia IIC T4

IECEx certifications

E7 IECEx Explosion-proof and Dust
Certification No.: IECEx KEM 09.0034X
Applicable Standards: IEC60079-0:2004, IEC60079-1:2007-04, IEC60079-26:2006, IEC 61241-0:2004, IEC 61241-1:2004
Markings: Ex d IIC T5 or T6 Ga/Gb, T5 (-50 °C ≤ Ta ≤ 80 °C)/T6 (-50 °C ≤ Ta ≤ 65 °C)
Ex tD A20/A21 IP66 T90°C (-50 °C ≤ Ta ≤ 80 °C)

Conditions of Certification (X):
This device contains a thin wall diaphragm. Installation, maintenance, and use shall take into account the environmental conditions to which the diaphragm will be subjected. The manufacturer's instructions for installation and maintenance shall be followed in detail to assure safety during its expected lifetime.
For information on the dimensions of the flameproof joints the manufacturer shall be contacted.

I7 IECEx Intrinsic Safety
Certification No.: IECEx BAS 09.0076X
Applicable Standards: IEC 60079-0:2007-10, IEC 60079-11:2006
Markings: Ex ia IIC T5 Ga (-60°C ≤ Ta ≤ 40 °C), Ex ia IIC T4 Ga (-60 °C ≤ Ta ≤ 70 °C)
Ui = 30V, Ii = 200mA, Pi = 0.9W, Ci = 0.012 µF, Li = 0

Conditions of Certification (X):

1. If the apparatus is fitted with an optional 90V transient suppressor, it is not capable of withstanding the 500V insulation test required by clause 6.3.12 of IEC 60079-11: 2006. This must be taken into account when installing the apparatus.
2. The enclosure may be made of aluminum alloy and given a protective polyurethane paint finish; however, care should be taken to protect it from impact or abrasion if located in Zone 0.

N7 IECEx Type 'n'
Certification No.: IECEx BAS 09.0077X
Applicable Standards: IEC60079-0:2007, IEC60079-15 2005
Markings: Ex nA nL IIC T5 (-40 ≤ Ta ≤ 70 °C)

Conditions of Certification (X):
The apparatus is not capable of withstanding the 500V insulation test required by clause 6.8.1 of IEC 60079-15: 2005. This must be taken into account when installing the apparatus.

Inmetro certifications

E2 Flameproof

Certificate No: CEPEL Ex-073/97-1 (Mfg USA and Singapore)
Certificate No: CEPEL Ex-1383/07 (Mfg Brazil)
Applicable Standards: IEC60079-0:2004, IEC60079-1:2003, IEC 60529:2001
Markings: BR-Ex d IIC T* IP66W, Tamb: de -50 a +65°C para T6,
Tamb: de -50 a +80°C para T5

I2 Intrinsic Safety
Certificate No.: CEPEL Ex-072/97-1X (Mfg USA and Singapore)
Certificate No.: CEPEL Ex-1412/07X (Mfg Brazil)
Applicable Standards: IEC60079-0:2000, IEC60079-11:1999, IEC 60529:2001
Markings: BR- Ex ia IIC T5(Tamb =-20 a 40)°C T4(Tamb =-20 a 70)°C IP66W, Ui=30V, Ii= 200mA, Pi=0.9W, Ci =0.012uF, Li=Desprezivel

Specific Conditions for Safe Use (X):
See Certificate.

China certifications

E3 Flameproof and Dust
NEPSI Certificate No.: GYJ091065X
Applicable Standards: GB3836.1-2000, GB3836.4-2000,GB4208-1993, GB12476-2000
Markings: Ex d II C T5/T6, -50°~+80°C (T5), -50°~+65°C (T6), DIP A21 TA T90°C, IP66

Specific Conditions for Safe Use (X):
Refer to Appendix B of the Rosemount 3051 HART 7 reference manual (00809-0100-4007).

I3 Intrinsic Safety and Dust
NEPSI Certificate No: GYJ091066X
Applicable Standards: GB3836.1-2000, GB3836.2-2000,GB4208-1993, GB12476-2000
Markings: Ex ia II C T4/T5, -60°~+40°C (T5), -60°~+70°C (T4), DIP A21 TA T80°C

Specific Conditions for Safe Use (X):
Refer to Appendix B of the Rosemount 3051 HART 7 reference manual (00809-0100-4007).

N3 China Type n - Non-Sparking
NEPSI Certificate No.: GYJ101111X
Applicable Standards: GB3836.1-2000, GB3836.8-2003
Markings: Ex nA nL IIC T5 (-40 °C < TA < 70 °C)

Specific Conditions for Safe Use (X):
Refer to Appendix B of the Rosemount 3051 HART 7 reference manual (00809-0100-4007).

Combinations of certifications

Stainless steel certification tag is provided when optional approval is specified. Once a device labeled with multiple approval types is installed, it should not be reinstalled using any other approval types. Permanently mark the approval label to distinguish it from unused approval types.

K1 – E1, N1

K5 – E5, I5

K6 – E5, I5, E6, I6, E1, I1

K7 – E7, I7, N7

K8 – E8, I1

KA – E1, I1, N1, E6, I6

KB – E5, I5, E1, I1

KC – E5, I5, E1, I1

KD – E5, I5, E6, I6, I1

FOUNDATION™ FIELDBUS AND PROFIBUS PA PROTOCOLS

Hazardous Locations Certifications

North American Certifications

FM Approvals

E5 Explosion-Proof and Dust Ignition Proof
Certificate No: 0T2H0.AE
Applicable Standards: FM Class 3600 – 1998, FM Class 3615 – 2006, FM Class 3810 – 2005, ANSI/NEMA 250 - 2003
Markings: Explosion-Proof for Class I, Division 1, Groups B, C, and D.
Dust-Ignition-Proof for Class II, Division 1, Groups E, F, G, and Class III, Division 1.
T5 (T_a = 85 °C), Factory Sealed, Enclosure Type 4x.

I5 Intrinsically Safe and Non-Incendive
Certificate No: 1Q4A4.AX
Applicable Standards: FM Class 3600 – 1998, FM Class 3610 – 2010, FM Class 3611 – 200, FM Class 3810 – 2005, ANSI/NEMA 250 - 2003
Markings: Intrinsically Safe for use in Class I, Division 1, Groups A, B, C, and D; Class II, Division 1, Groups E, F, and G; Class III, Division 1 when connected per Rosemount drawing 03031-1019 and 00375-1130 (When used with a Field Communicator); Non-incendive for Class I, Division 2, Groups A, B, C, and D.

Temperature Code:T4 (T_a = 60 °C), T3 (T_a = 85 °C), Enclosure Type 4X
For input parameters see control drawing 03031-1019.

Canadian Standards Association (CSA)

All CSA hazardous approved transmitters are certified per ANSI/ISA 12.27.01-2003.

E6 Explosion-Proof, Dust Ignition Proof and Class I Division 2
Certificate No.: 1053834
Applicable Standards: CSA Std. C22.2 No. 142 – M1987, CSA Std. C22.2 No. 30 – M1986, CSA Std. C22.2 No. 213 – M1987, ANSI/ISA 12.27.02-2003
Markings: Explosion-Proof for Class I, Division 1, Groups B, C, and D. Dust-Ignition-Proof for
Class II and Class III, Division 1, Groups E, F, and G.
Suitable for Class I, Division 2
Groups A, B, C, and D. Enclosure type 4X,factory sealed.
Single Seal (See Drawing 03031-1053)

C6 Explosion-proof, Dust Ignition-proof, Intrinsically Safe, and Division 2
Certificate No.: 1053834
Applicable Standards: CSA Std. C22.2 No.142-M19878, CSA Std. C22.2. No.154 - 92,ANSI/ISA 12.27.02-2003, CSA Std. C22.2 No. 30 - M1986, CSA Std. C22.2 No. 213 - M1987
Markings: Intrinsically safe for Class I, Division 1, Groups A, B, C, and D when
connected in accordance with Rosemount drawings 03031-1024. Temperature Code T3C.
Explosion-Proof for Class I, Division 1, Groups B, C, and D.
Dust-Ignition-Proof for Class II and Class III, Division 1, Groups E, F, and G. Suitable for Class I, Division 2 Groups A, B, C, and D hazardous locations. Enclosure type 4X, factory sealed
For input parameters see control drawing 03031-1024.

European Certifications

I1 ATEX Intrinsic Safety and Dust
Certification No.: BAS 98ATEX1355X ⟨Ex⟩ II 1 GD
Ex ia IIC T4 (T_{amb} = –60 to +60 °C)
Ex td A20 IP66 T 70 °C (-20 ≤ T_a ≤ 40 °C)
CE 1180

TABLE 14. Input Parameters

U_i = 30V
I_i = 300 mA
P_i = 1.3 W
C_i = 0 µF

TABLE 15. RTD Assembly (3051CFx Option T or R)

U_i = 5 Vdc
I_i = 500 mA
P_i = 0.63W

Special Conditions for Safe Use (X):
1. If the apparatus is fitted with an optional 90V transient suppressor, it is not capable of withstanding the 500V insulation test required by clause 6.3.12 of EN 60079-11. This must be taken into account when installing the apparatus.
2. The enclosure may be made of aluminium alloy and given a protective polyurethane paint finish; however, care should be taken to protect it from impact or abrasion if located in Zone 0.

IA ATEX FISCO Intrinsic Safety
Certification No.: BAS 98ATEX1355X ⟨Ex⟩ II 1 G
Ex ia IIC T4 (T_{amb} = –60 to +60 °C)
IP66
CE 1180

TABLE 16. Input Parameters

U_i = 17.5 V
I_i = 380 mA
P_i = 5.32 W
C_i = ≤ 5 µF
L_i = ≤ 10 µH

Special Conditions for Safe Use (X):
When the optional transient protection terminal block is installed, the apparatus is not capable of withstanding the 500V insulation test required by Clause 6.3.12 of EN60079-11. This must be taken into account when installing the apparatus.
The enclosure may be made of aluminium alloy and given a protective polyurethane paint finish; however care should be taken to protect it from impact or abrasion located in Zone 0.

N1 ATEX Type n and Dust
Certification No.: BAS 98ATEX3356X ⟨Ex⟩ II 3 GD
U_i = 40 Vdc max
Ex nL IIC T5 (T_a = –40°C to 70 °C)
Dust rating: Ex tD A22 T80 °C (T_{amb} = –20 to 40 °C) IP66

Special Conditions for Safe Use (X):
The apparatus is not capable of withstanding the 500V insulation test required by clause 6.8.1 of EN 60079-15. This must be taken into account when installing the apparatus.

E8 ATEX Flame-Proof and Dust
Certification No.: KEMA 00ATEX2013X
Applicable Standards: EN60079-0: 2006, EN60079-1: 2007, EN60079-26: 2007, EN61241-0: 2006, EN61241-1:2004
Markings: ⟨Ex⟩II 1/2 GD, Ex d IIC T6 (–50 < Ta < 65 °C), Ex d IIC T5 (–50 < Ta < 80 °C), Ex tD A20/A21 T90 °C, IP66
CE 1180

Special Conditions for Safe Use (X):
This device contains a thin wall diaphragm. Installation, maintenance, and use shall take into account the environmental conditions to which the diaphragm will be subjected. The manufacturer's instructions for installation and maintenance shall be followed in detail to assure safety during its expected lifetime.
In case of repair, contact the manufacturer for information on the dimensions of the flameproof joints.

IECEx Certifications

I7 IECEx Intrinsic Safety
Applicable Standards: IEC 60079-0:2 007-10, IEC 60079-11:2006
Certification No.: IECEx BAS 09.0076X
Ex ia IIC T4 Ga (–60 °C ≤ T_a ≤ 60 °C)
IP66

TABLE 17. Input Parameters

U_i = 30 V
I_i = 300 mA
P_i = 1.3 W
C_i = 0 µF
L_i = 0 µH

TABLE 18. RTD Assembly (3051CFx Option T or R)

U_i = 5 Vdc
I_i = 500 mA
P_i = 0.63W

Special Conditions for Safe Use (X):
1. If the apparatus is fitted with an optional 90V transient suppressor, it is not capable of withstanding the 500V insulation test required by clause 6.3.12 of IEC 60079-11. This must be taken into account when installing the apparatus.
2. The enclosure may be made of aluminium alloy and given a protective polyurethane paint finish; however, care should be taken to protect it from impact or abrasion if located in Zone 0.

E7 IECEx Explosion-proof and Dust
Certification No.: IECEx KEM 09.0034X
Applicable Standards: IEC60079-0:2004, IEC60079-1:2007-04, IEC60079-26:2006, IEC 61241-0:2004, IEC 61241-1:2004
Markings: Ex d IIC T5 or T6 Ga/Gb, T5 (-50 °C < Ta < 80 °C)/T6 (-50 °C < Ta < 65 °C)
Ex tD A20/A21 IP66 T90 °C (-50 °C < Ta < 80 °C)

Special Conditions for Safe Use (X):
This device contains a thin wall diaphragm. Installation, maintenance, and use shall take into account the environmental conditions to which the diaphragm will be subjected. The manufacturer's instructions for installation and maintenance shall be followed in detail to assure safety during its expected lifetime.
For information on the dimensions of the flameproof joints the manufacturer shall be contacted.

N7 IECEx Type 'n'
Certification No.: IECEx BAS 09.0077X
Applicable Standards: IEC60079-0:2007, IEC60079-15 2005
Markings: Ex nA nL IIC T5 (-40 < T_a < 70 °C)

Special Conditions for Safe Use (X):
The apparatus is not capable of withstanding the 500V insulation test required by clause 6.8.1 of IEC 60079-15: 2005. This must be taken into account when installing the apparatus.

TIIS Certifications

E4 TIIS Flame-Proof
Ex d IIC T6

Certificate	Description
TC15852	3051C/D/1 FOUNDATION Fieldbus — no display
TC15853	3051C/D/1 FOUNDATION Fieldbus — with display
TC15858	3051T/G/1 FOUNDATION Fieldbus, SST, Silicon — no display
TC15859	3051T/G/1 FOUNDATION Fieldbus, Alloy C-276, Silicon — no display
TC15860	3051T/G/1 FOUNDATION Fieldbus, SST, Silicon — with display
TC15861	3051T/G/1 FOUNDATION Fieldbus, Alloy C-276, Silicon — with display

I2 Intrinsic Safety
Certificate No.: CEPEL Ex-072/97-1X (Mfg USA and Singapore)
Certificate No.: CEPEL Ex-1412/07X (Mfg Brazil)
Applicable Standards: IEC60079-0:2000, IEC60079-11:1999, IEC 60529:2001
Markings: BR- Ex ia IIC T5(Tamb =-20 a 40) °C T4(T_{amb} = -20 a 70) °C IP66W, U_i = 30V, I_i = 200mA, P_i = 0.9W, C_i = 0.012uF, L_i = Desprezivel

Special Conditions for Safe Use (X):
See Certificate.

I3 Intrinsic Safety and DUST
NEPSI Certificate No: TYJ091067X
Applicable Standards: GB3836.1-2000, GB3836.2-2000, GB4208-1993, GB12476-2000
Markings: Ex ia IIC T4, -60 °C ±60 °C
DIP A20 TA T70 °C IP66

Special Conditions for Safe Use (X):

Refer to Appendix B of Rosemount 3051 reference manual (00809-0100-4007).

Combinations of Certifications

Stainless steel certification tag is provided when optional approval is specified. Once a device labeled with multiple approval types is installed, it should not be reinstalled using any other approval types. Permanently mark the approval label to distinguish it from unused approval types.

K5 **E5** and **I5** combination

KB **K5** and **C6** combination

KD **K5**, **C6**, **I1**, and **E8** combination

K6 **C6**, **I1**, and **E8** combination

K8 **E8** and **I1** combination

K7 **E7**, **I7**, and **N7** combination

Standard 3051 Dimensional Drawings

Standard 3051C Exploded View

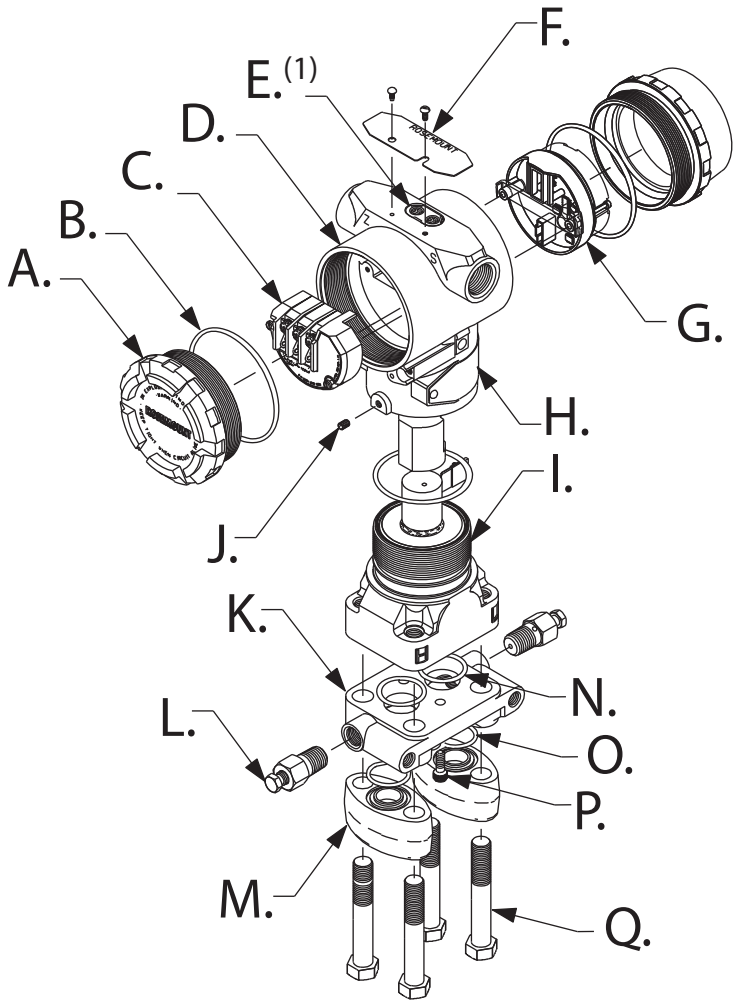

1) Span and Zero Adjustment Buttons are standard with 4-20 mA. Local Operator Interface buttons are optional for PROFIBUS PA protocol. Local Configuration Buttons are not available with FOUNDATION fieldbus.

Standard 3051C Exploded View Labels

A. Cover
B. Cover O-ring
C. Terminal Block
D. Electronics Housing
E. Local Configuration Buttons
F. Certification Label
G. Electronics Board
H. Name Plate
I.Sensor Module
J. Housing Rotation Set Screw (180 degree maximum rotation without further disassembly)
K. Coplanar Flange
L. Drain/Vent Valve
M. Flange Adapters
N. Process O-Ring
O. Flange Adapter O-Ring
P. Flange Alignment Screw (not pressure retaining)
Q. Flange Bolts

Standard 3051C Coplanar Flange[1]

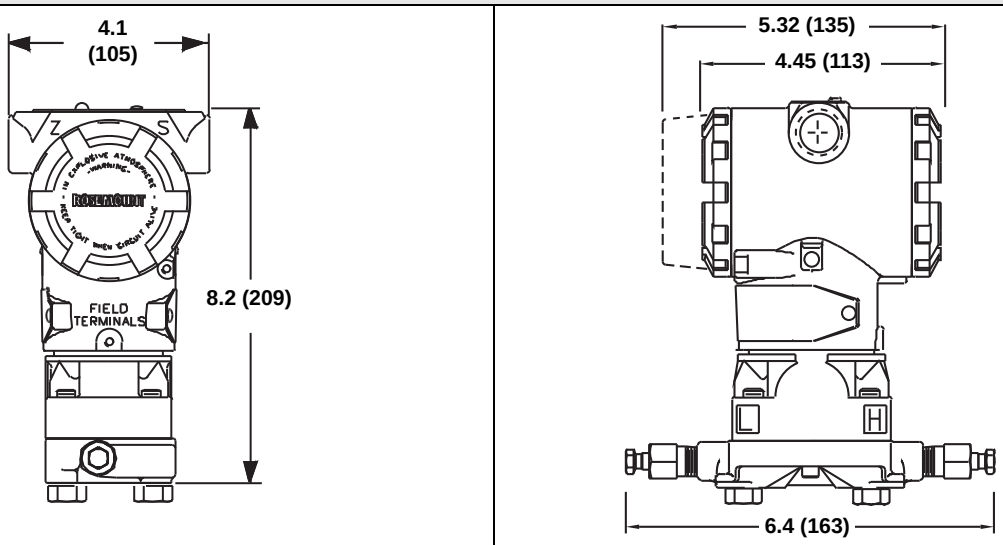

(1) For FOUNDATION fieldbus and PROFIBUS PA transmitters with LCD Display, housing length is 5.78 in. (147 mm).

Standard 3051C Coplanar Flange with Rosemount 305 3-Valve Coplanar Integral Manifold

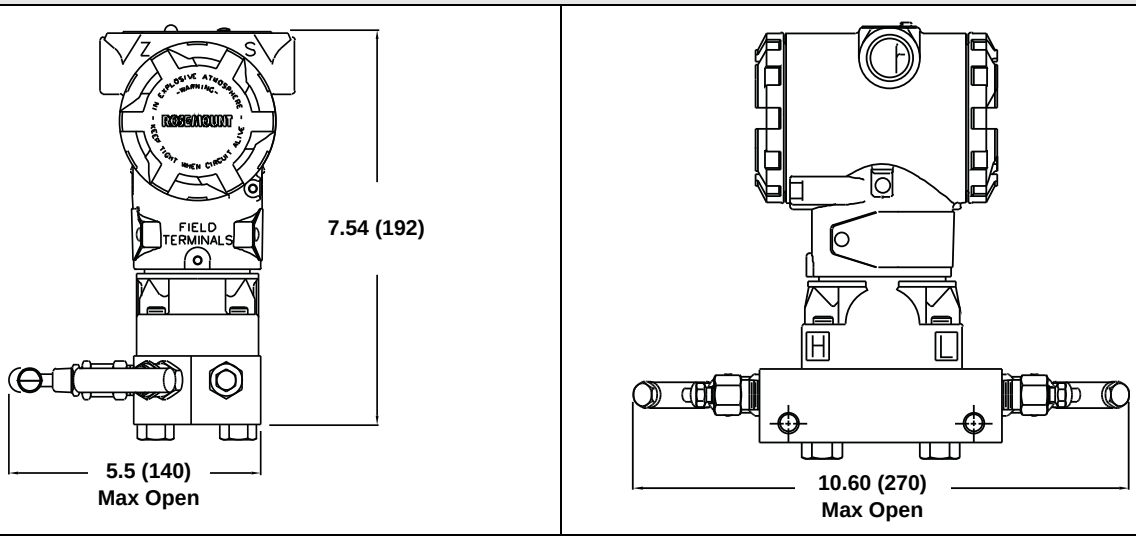

Dimensions are in inches (millimeters)

Coplanar Flange Mounting Configurations with Optional Bracket (B4) for 2-in. Pipe or Panel Mounting

PANEL MOUNTING

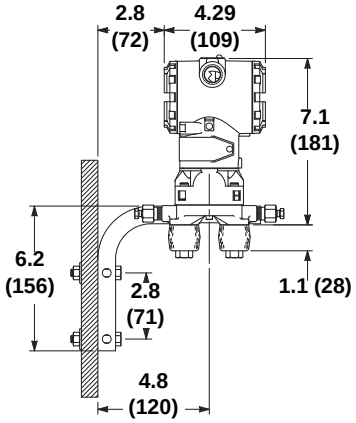

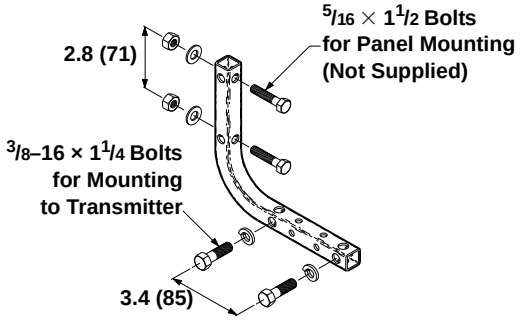

PIPE MOUNTING

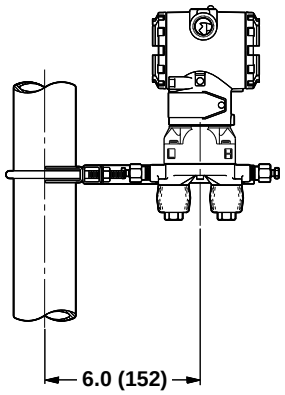

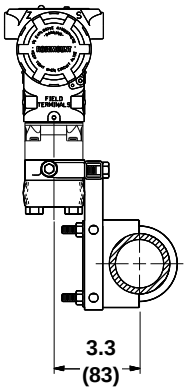

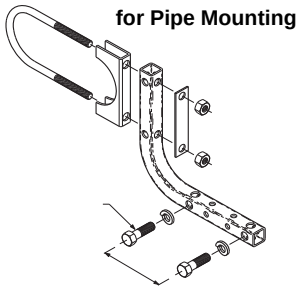

Dimensions are in inches (millimeters)

Standard 3051C Coplanar with Traditional Flange

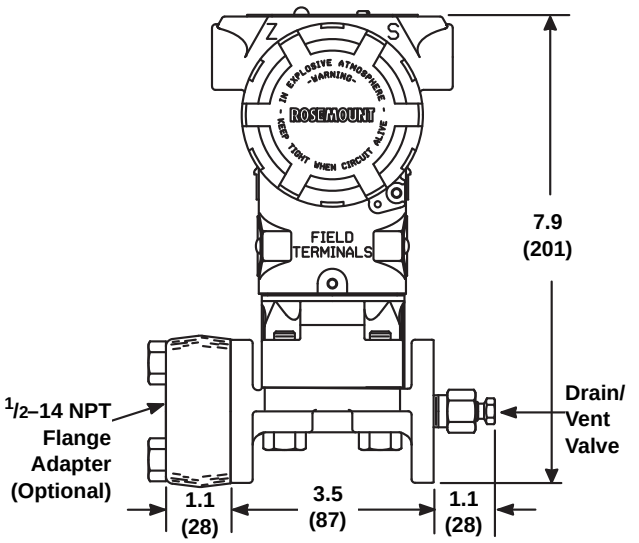

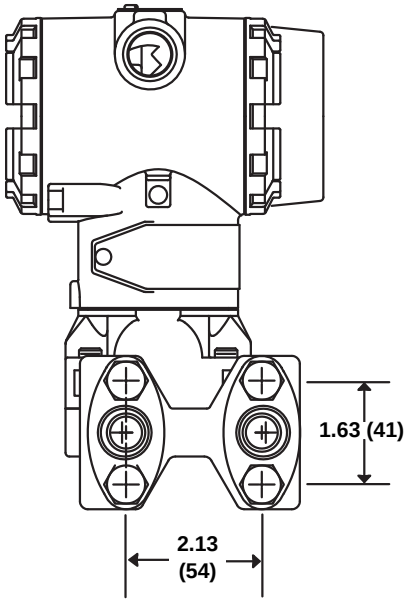

Standard 3051C Coplanar with Rosemount 305 3-Valve Traditional Integral Manifold

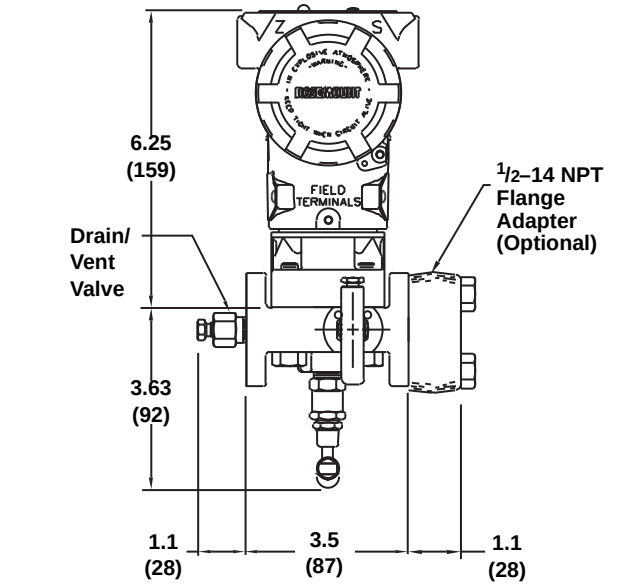

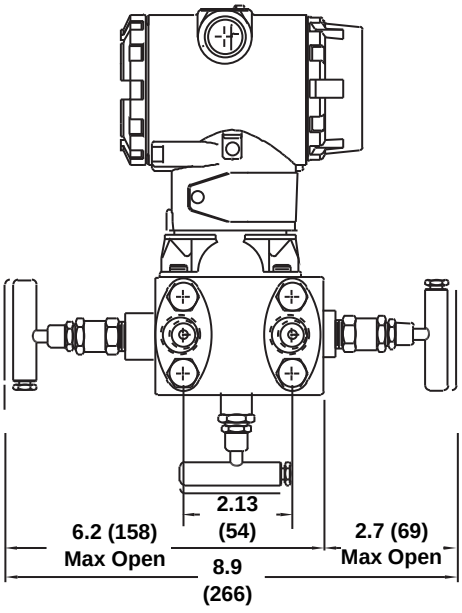

Dimensions are in inches (millimeters)

Traditional Flange Mounting Configurations with Optional Brackets for 2-in. Pipe or Panel Mounting

Panel Mounting Bracket (option B2/B8)

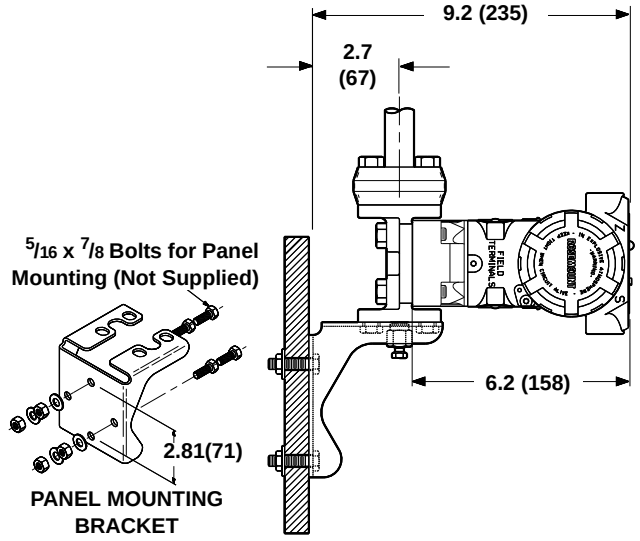

2-in. Pipe Mounting Bracket (option B1/B7/BA)

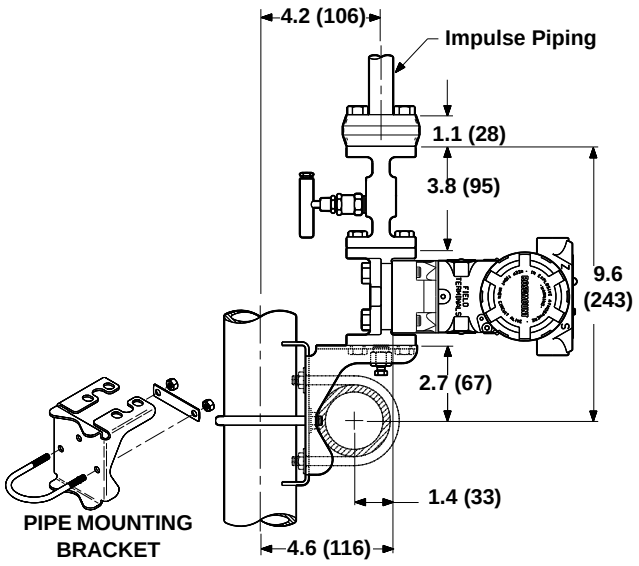

2-in. Pipe Mounting Bracket (option B3/B9/BC)

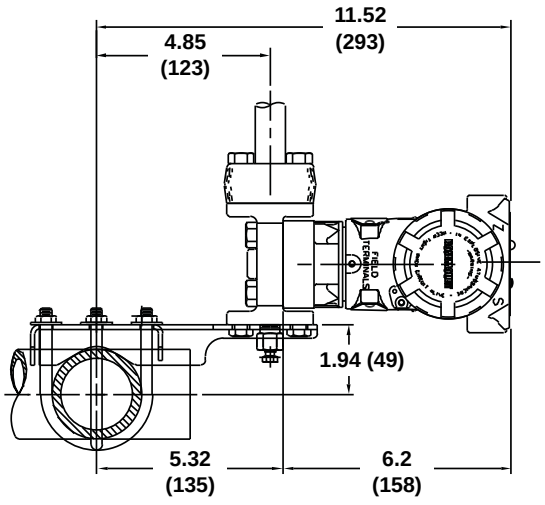

Dimensions are in inches (millimeters)

Standard 3051T Dimensional Drawings(1)

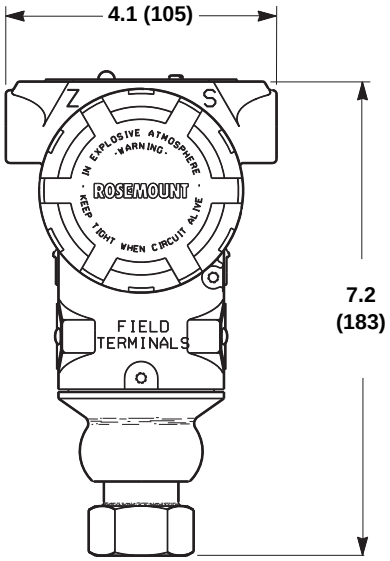

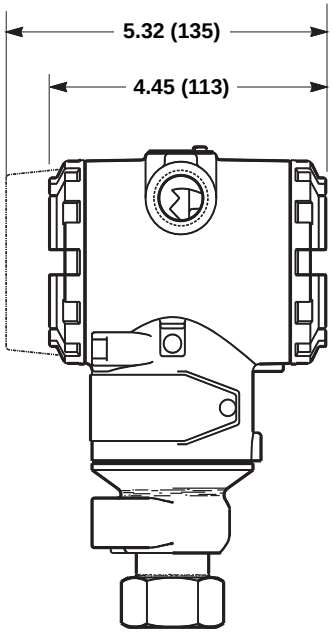

(1) For FOUNDATION fieldbus and PROFIBUS PA transmitters with LCD Display, housing length is 5.78 in. (146 mm).

Standard 3051T with Rosemount 306 2-Valve I Integral Manifold

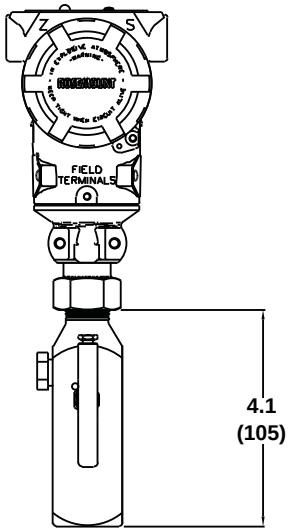

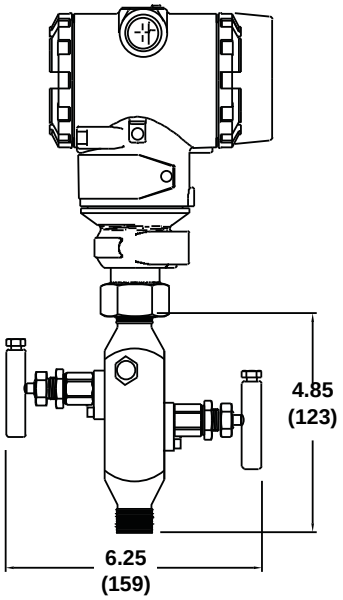

Dimensions are in inches (millimeters)

Standard 3051T Typical Mounting Configurations with Optional Mounting Bracket

Pipe Mounting

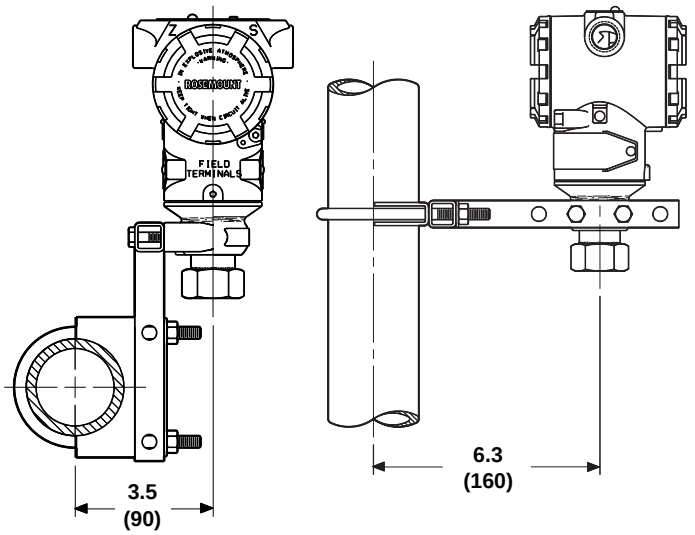

Panel Mounting

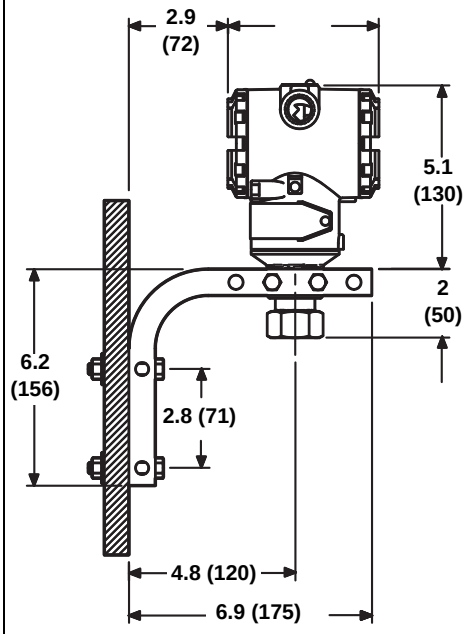

Dimensions are in inches (millimeters)

Rosemount Standard 3051CFA Pak-Lok Annubar Flowmeter(1)

Front View	Side View	Top View

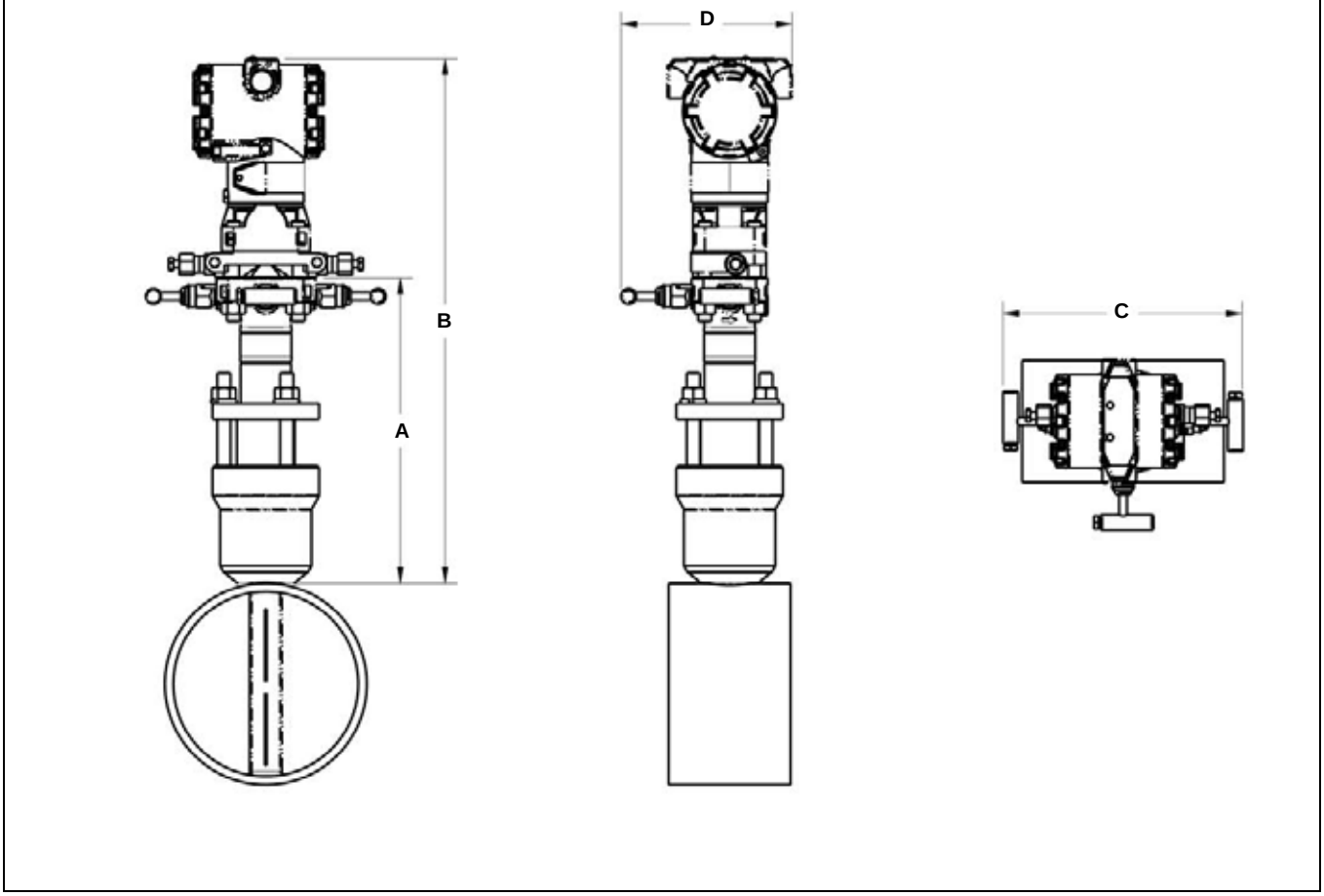

(1) The Pak-Lok Annubar model is available up to 600# ANSI (1440 psig at 100 °F (99 bar at 38 °C)).

Table 19. Standard 3051CFA Pak-Lok Annubar Flowmeter Dimensional Data

Sensor Size	A (Max)	B (Max)	C (Max)	D (Max)
1	8.50 (215.9)	14.60 (370.8)	9.00 (228.6)	6.00 (152.4)
2	11.0 (279.4)	16.35 (415.3)	9.00 (228.6)	6.00 (152.4)
3	12.00 (304.8)	19.10 (485.1)	9.00 (228.6)	6.00 (152.4)
Dimensions are in inches (millimeters)				

Rosemount Standard 3051CFC Compact Orifice Flowmeter

	Orifice Plate Side View	Orifice Plate Front View	Orifice Plate Top View
Compact Orifice Plate (Primary Element Type code P)	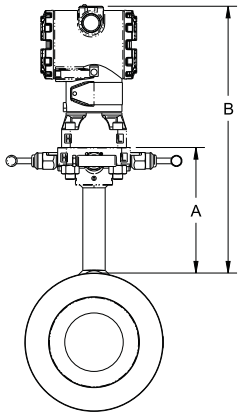	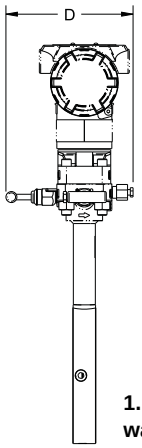 **1.13-in. (28.7 mm) wafer thickness**	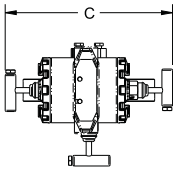
Conditioning Orifice Plate (Primary Element Type code C)	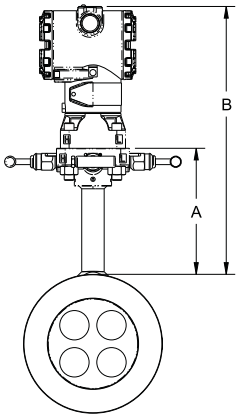	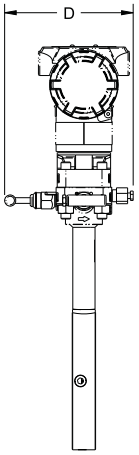	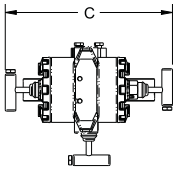

Table 20. Dimensional Drawings

Primary Element Type	A	B	Transmitter Height	C	D
Type P and C	5.62 (143)	Transmitter Height + A	6.27 (159)	7.75 (197) - closed 8.25 (210) - open	6.00 (152) - closed 6.25 (159) - open

Dimensions are in inches (millimeters)

Rosemount Standard 3051CFP Integral Orifice Flowmeter

Side View

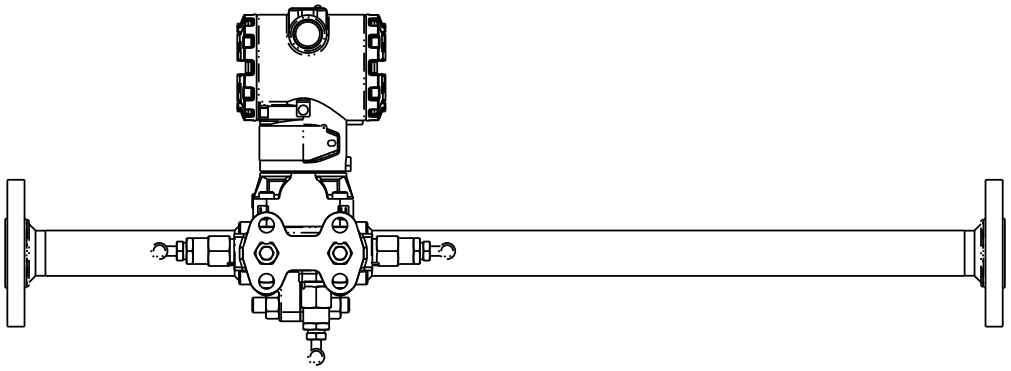

Bottom View

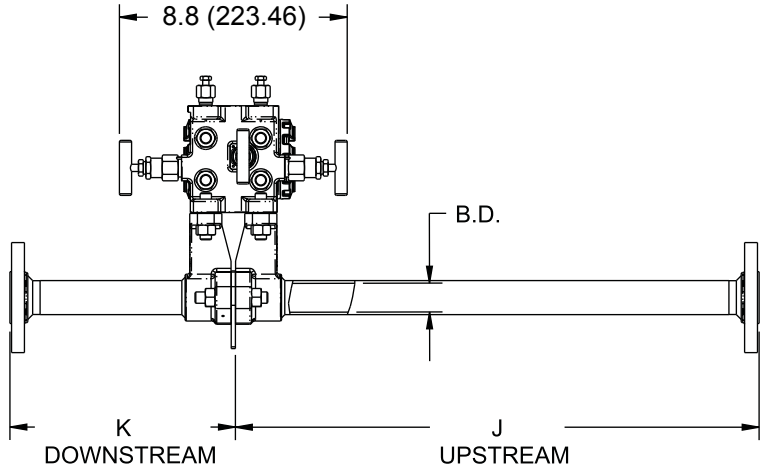

Front View

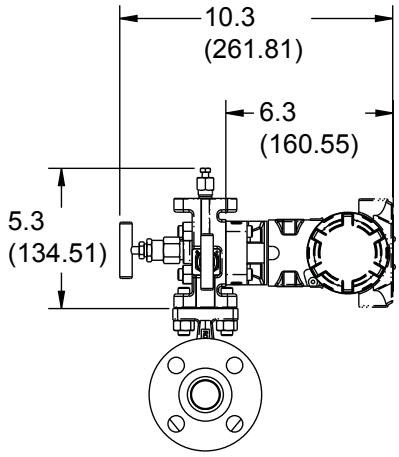

Dimensions are in inches (millimeters).

	Line Size		
Dimension	**1/2-in. (15 mm)**	**1-in. (25 mm)**	**1 1/2-in. (40 mm)**
J (Beveled/Threaded pipe ends)	12.54 (318.4)	20.24 (514.0)	28.44 (722.4)
J (RF slip-on, RTJ slip-on, RF-DIN slip on)	12.62 (320.4)	20.32 (516.0)	28.52 (724.4)
J (RF 150#, weld neck)	14.37 (364.9)	22.37 (568.1)	30.82 (782.9)
J (RF 300#, weld neck)	14.56 (369.8)	22.63 (574.7)	31.06 (789.0)
J (RF 600#, weld neck)	14.81 (376.0)	22.88 (581.0)	31.38 (797.1)
K (Beveled/Threaded pipe ends)	5.74 (145.7)	8.75 (222.2)	11.91 (302.6)
K (RF slip-on, RTJ slip-on, RF-DIN slip on)(1)	5.82 (147.8)	8.83 (224.2)	11.99 (304.6)
K (RF 150#, weld neck)	7.57 (192.3)	10.88 (276.3)	14.29 (363.1)
K (RF 300#, weld neck)	7.76 (197.1)	11.14 (282.9)	14.53 (369.2)
K (RF 600#, weld neck)	8.01 (203.4)	11.39 (289.2)	14.85 (377.2)
B.D. (Bore Diameter)	0.664 (16.87)	1.097 (27.86)	1.567 (39.80)
Dimensions are in inches (millimeters).			

(1) Downstream length shown here includes plate thickness of 0.162-in. (4.11 mm).

Standard 3051L Dimensional Drawings

2-in. Flange Configuring (Flush Mount Only)

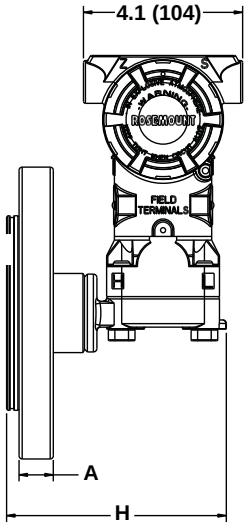

3- and 4-in. Flange Configuration

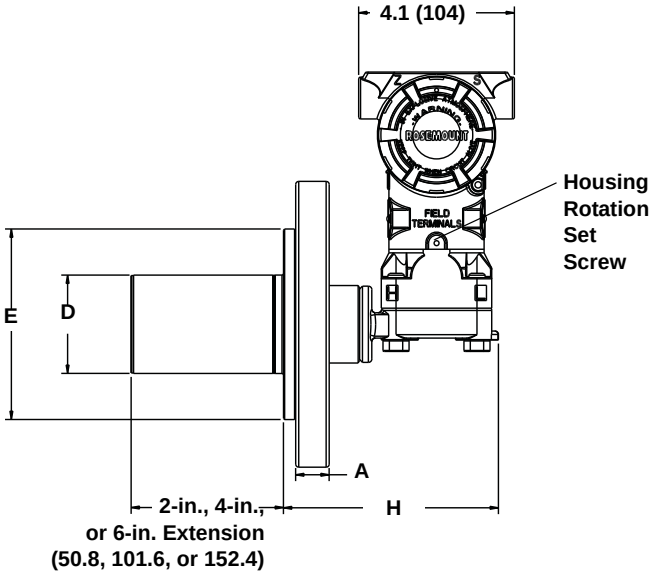

Optional Flushing Connection Ring (Lower Housing)

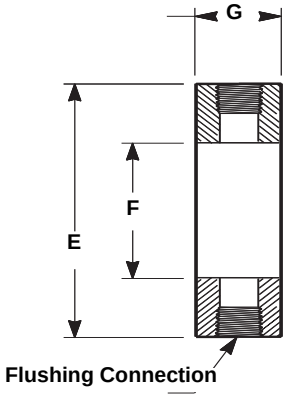

Diaphragm Assembly and Mounting Flange

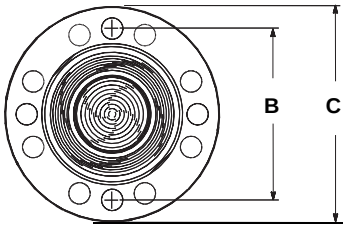

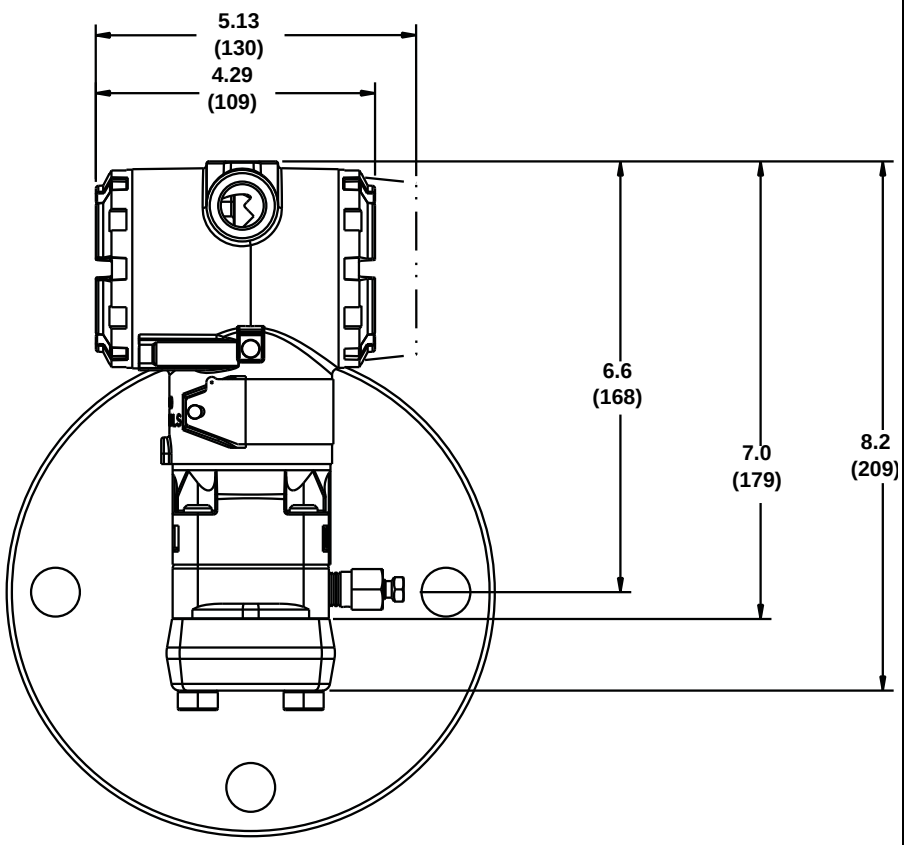

Dimensions are in inches (millimeters)

Enhanced 3051 Dimensional Drawings

Enhanced 3051C Exploded View

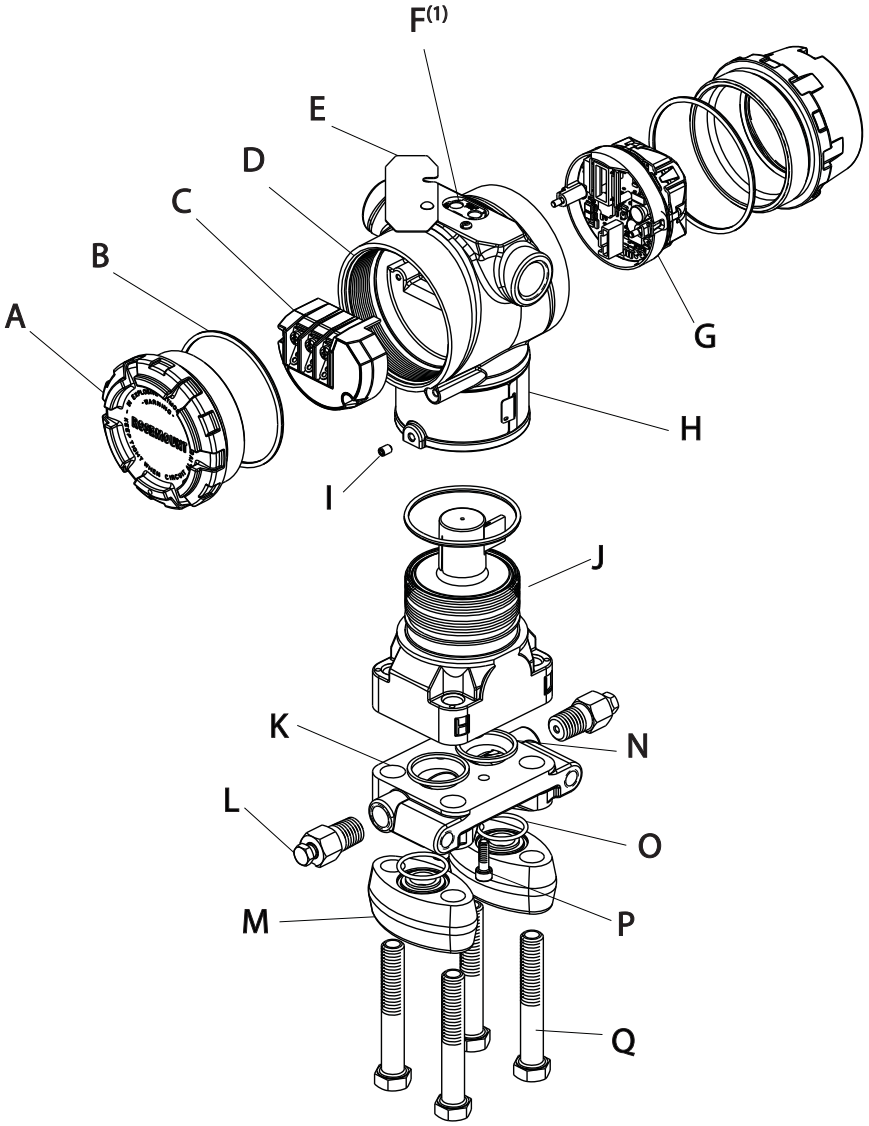

1) Local Configuration Buttons are optional on the enhanced 3051, and can be ordered as Analog Zero and Span, Digital Zero or LOI buttons.

Enhanced 3051C Exploded View labels

A. Cover
B. Cover O-ring
C. Terminal Block
D. Electronics Housing
E. Configuration Buttons Cover
F. Local Configuration Buttons
G. Electronics Board
H. Name Plate
I. Housing Rotation Set Screw (180 degree maximum rotation without further disassembly)
J. Sensor Module
K. Coplanar Flange
L. Drain/Vent Valve
M. Flange Adapters
N. Process O-Ring
O. Flange Adapter O-Ring
P. Flange Alignment Screw (not pressure retaining)
Q. Flange Bolts

Enhanced 3051C Coplanar Flange

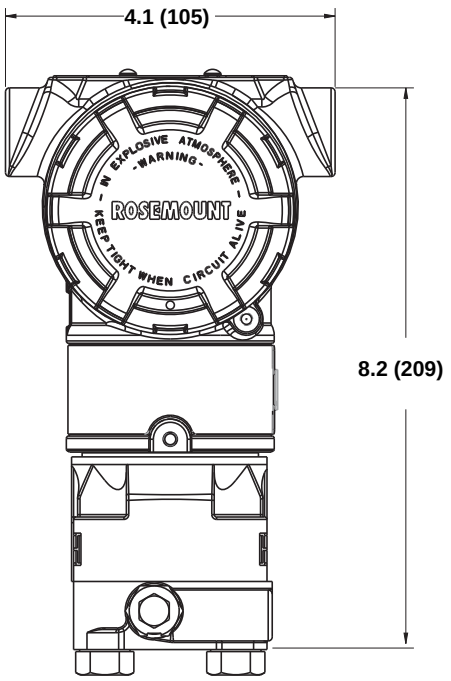

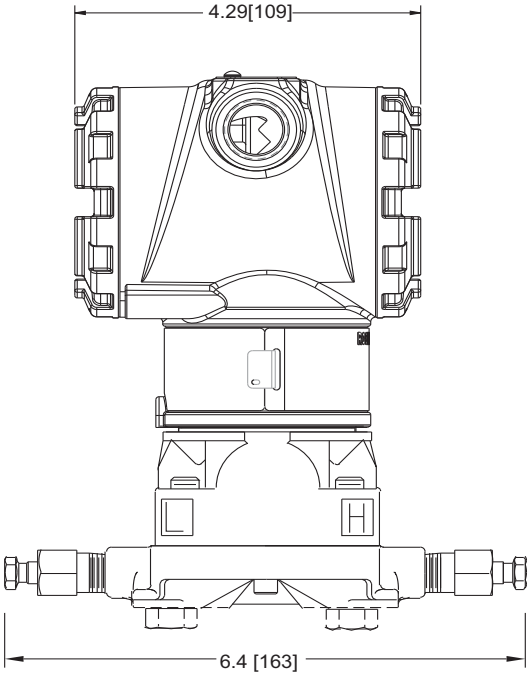

Enhanced 3051C Coplanar Flange with Rosemount 305 3-Valve Coplanar Integral Manifold

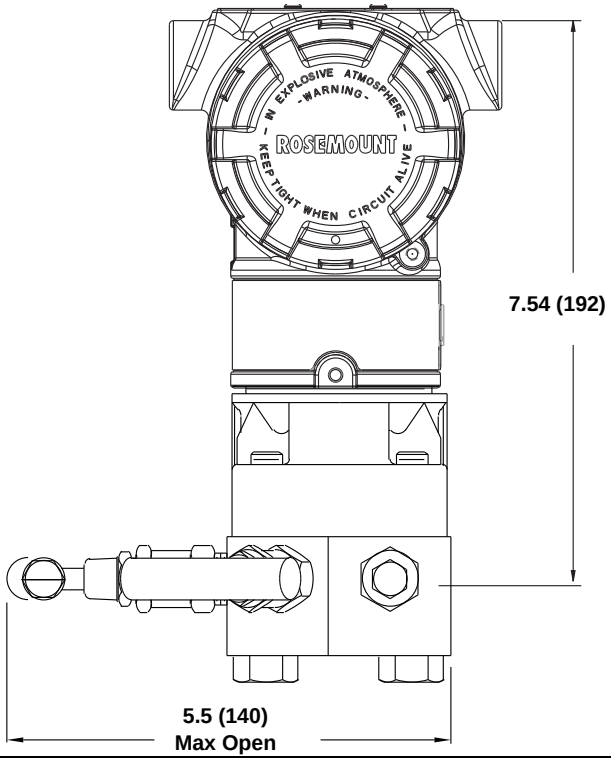

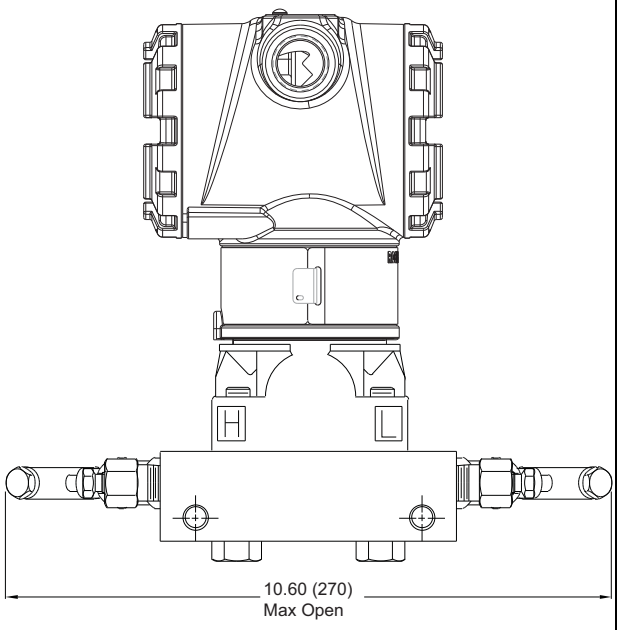

Dimensions are in inches (millimeters)

Coplanar Flange Mounting Configurations with Optional Bracket (B4) for 2-in. Pipe or Panel Mounting

PANEL MOUNTING

PANEL MOUNTING

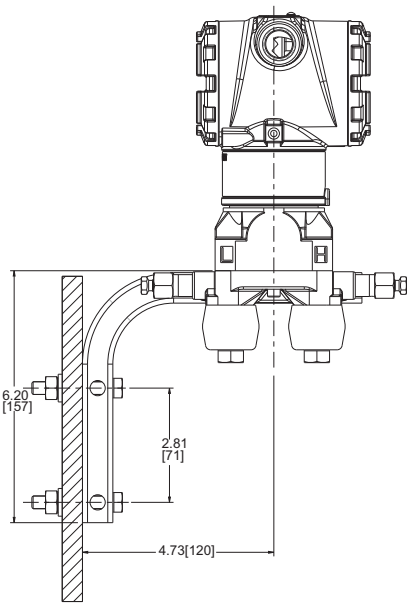

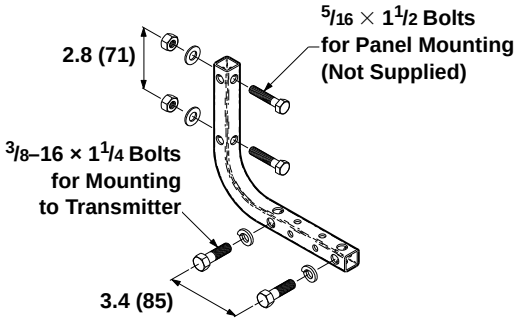

PIPE MOUNTING

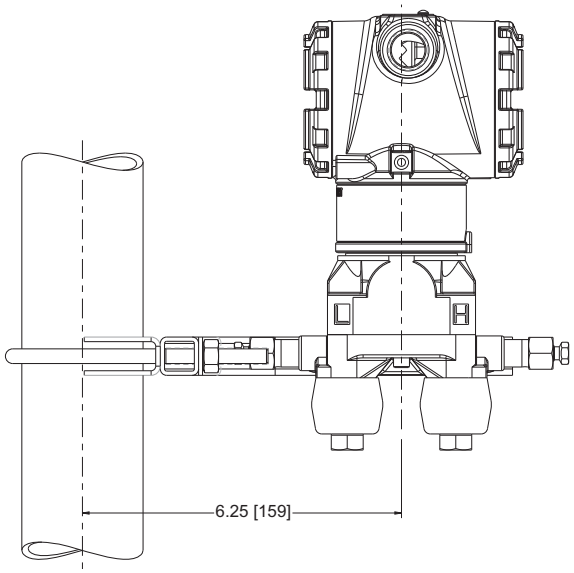

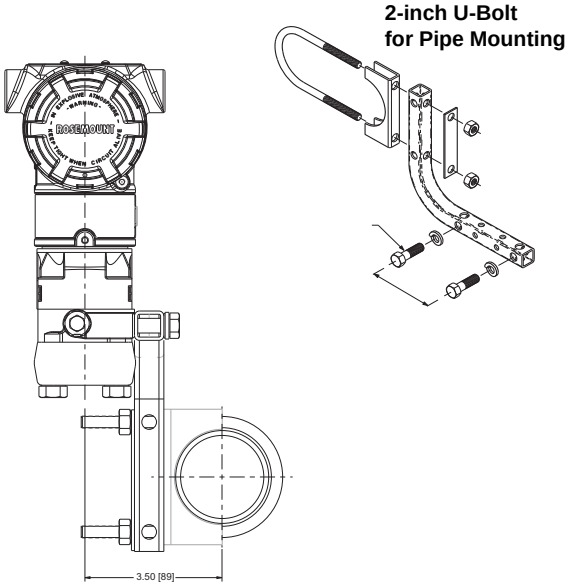

Dimensions are in inches (millimeters)

Enhanced 3051C Coplanar with Traditional Flange

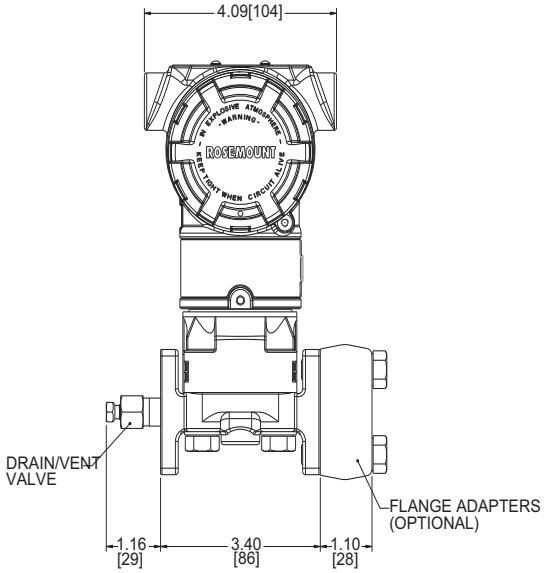

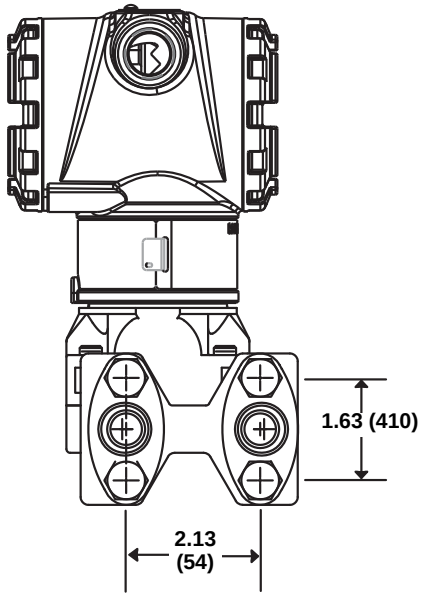

Enhanced 3051C Coplanar with Rosemount 305 3-Valve Traditional Integral Manifold

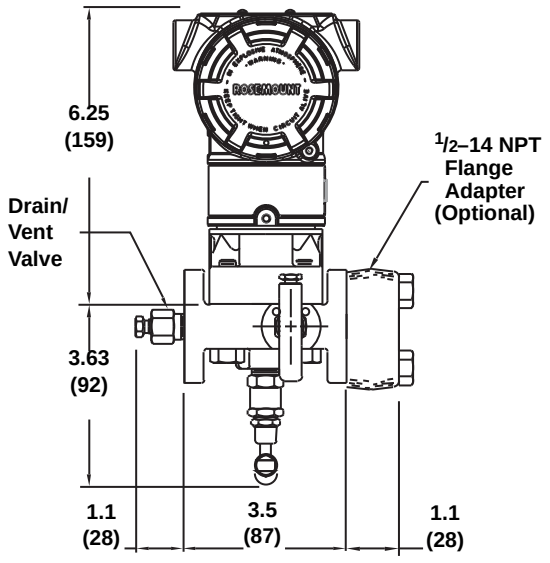

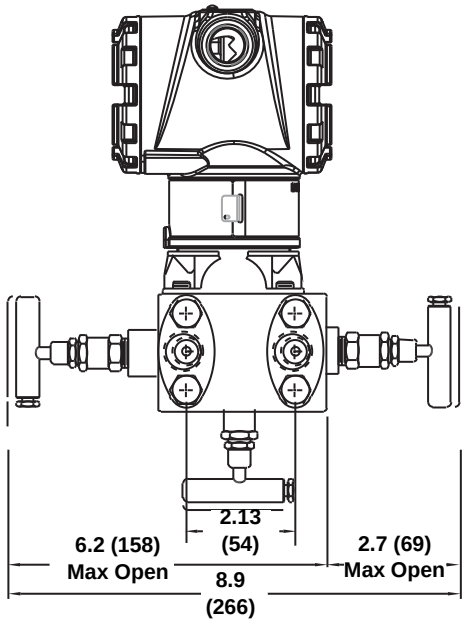

Dimensions are in inches (millimeters)

Traditional Flange Mounting Configurations with Optional Brackets for 2-in. Pipe or Panel Mounting

Panel Mounting Bracket (option B2/B8)

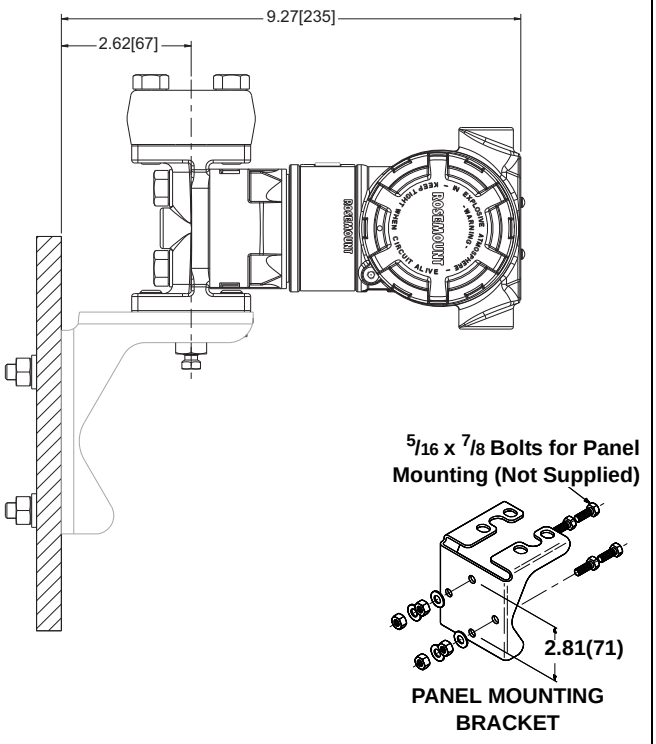

2-in. Pipe Mounting Bracket (option B1/B7/BA)

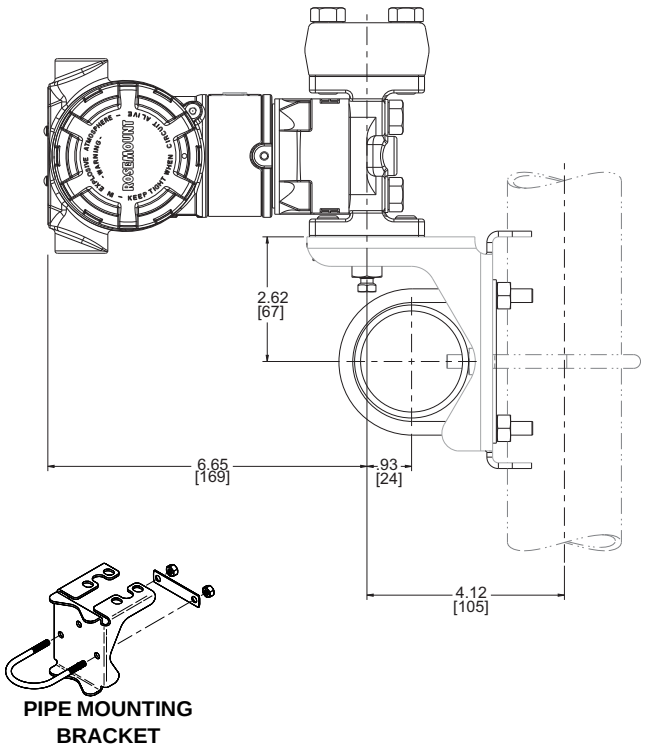

2-in. Pipe Mounting Bracket (option B3/B9/BC)

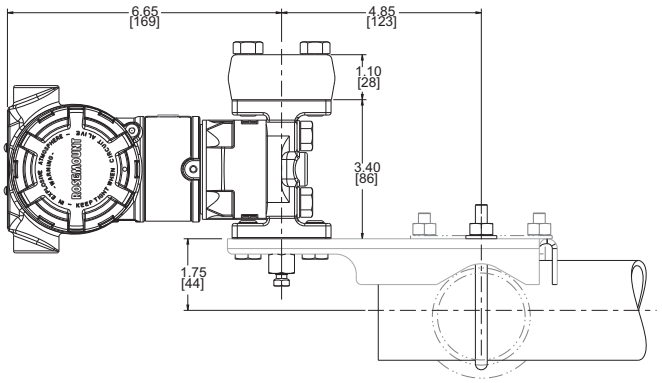

Dimensions are in inches (millimeters)

Enhanced 3051T Dimensional Drawings

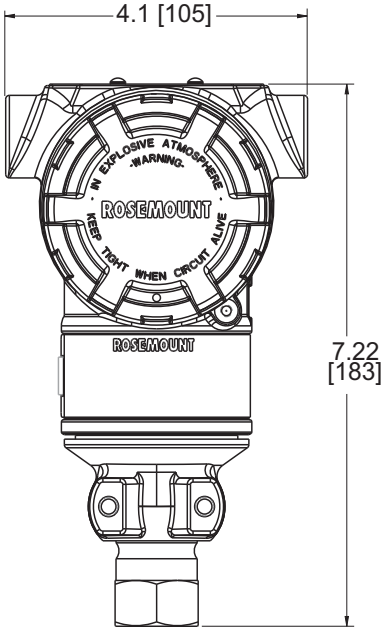

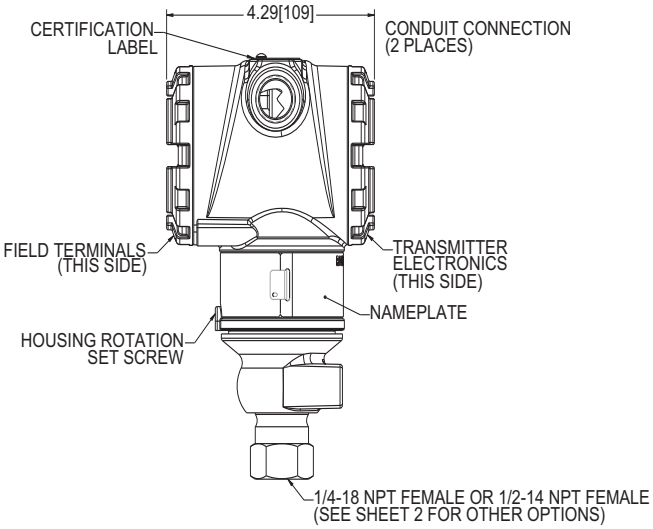

Enhanced 3051T with Rosemount 306 2-Valve I Integral Manifold

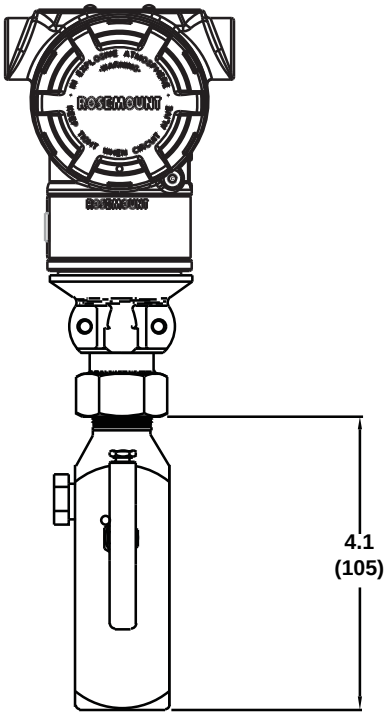

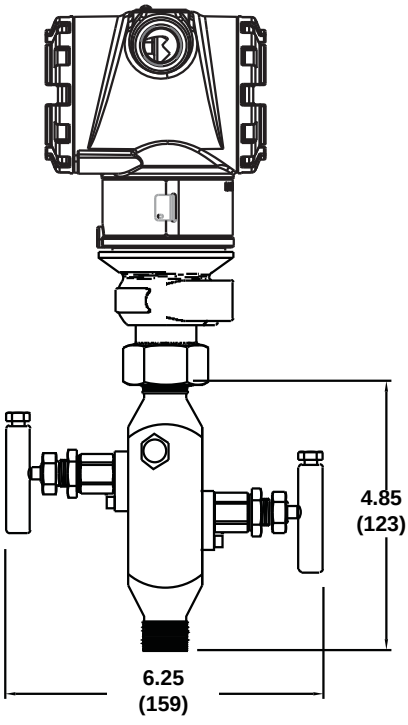

Dimensions are in inches (millimeters)

Enhanced 3051T Typical Mounting Configurations with Optional Mounting Bracket

Pipe Mounting

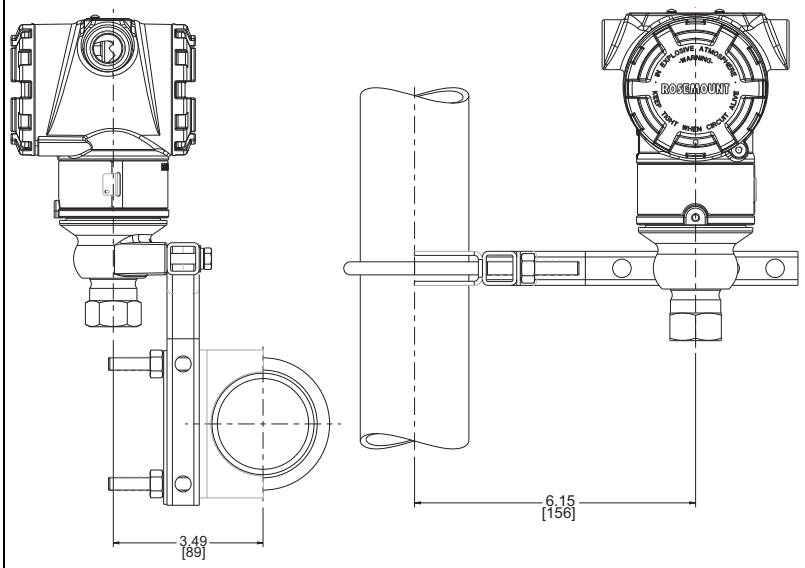

Panel Mounting

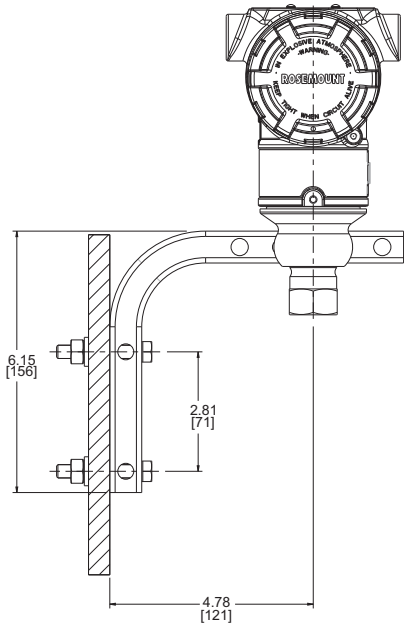

Dimensions are in inches (millimeters)

Rosemount Enhanced 3051CFA Pak-Lok Annubar Flowmeter(1)

Front View	Side View	Top View

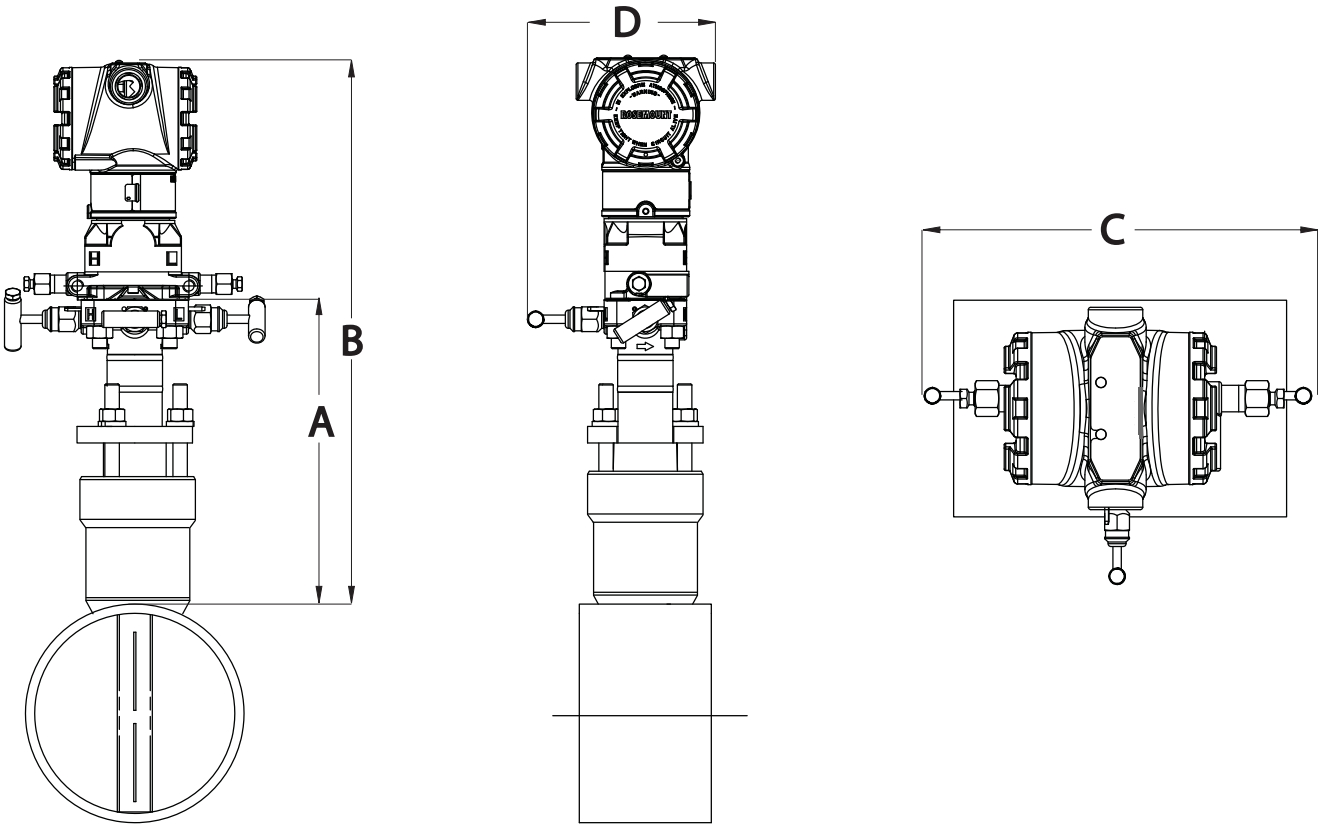

(1) The Pak-Lok Annubar model is available up to 600# ANSI (1440 psig at 100 °F (99 bar at 38 °C)).

Table 21. Enhanced 3051CFA Pak-Lok Annubar Flowmeter Dimensional Data

Sensor Size	A (Max)	B (Max)	C (Max)	D (Max)
1	8.50 (215.9)	14.60 (370.8)	9.00 (228.6)	6.00 (152.4)
2	11.0 (279.4)	16.35 (415.3)	9.00 (228.6)	6.00 (152.4)
3	12.00 (304.8)	19.10 (485.1)	9.00 (228.6)	6.00 (152.4)
Dimensions are in inches (millimeters)				

Rosemount Enhanced 3051CFC Compact Orifice Flowmeter

	Orifice Plate Side View	Orifice Plate Front View	Orifice Plate Top View
Compact Orifice Plate (Primary Element Type code P)	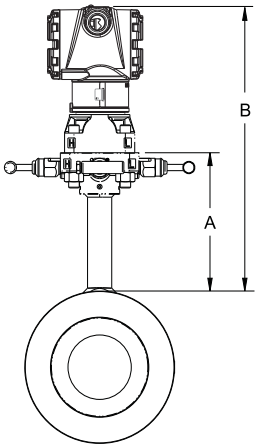	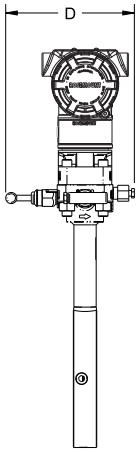	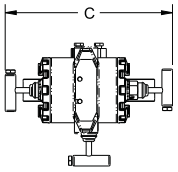
Conditioning Orifice Plate (Primary Element Type code C)	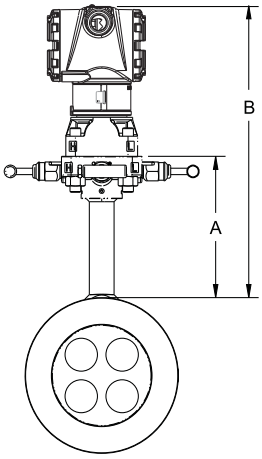	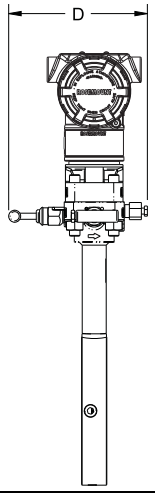	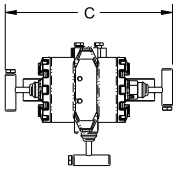

Table 22. Dimensional Drawings

Primary Element Type	A	B	Transmitter Height	C	D
Type P and C	5.62 (143)	Transmitter Height + A	6.27 (159)	7.75 (197) - closed 8.25 (210) - open	6.00 (152) - closed 6.25 (159) - open

Dimensions are in inches (millimeters)

Rosemount Enhanced 3051CFP Integral Orifice Flowmeter

Side View

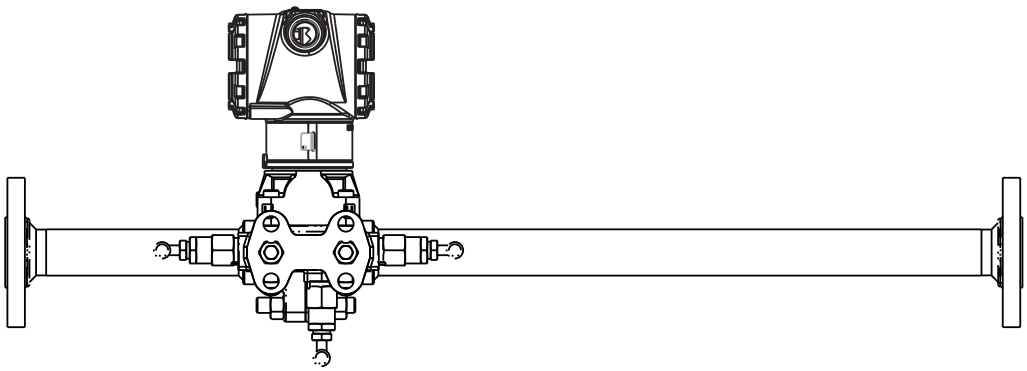

Bottom View

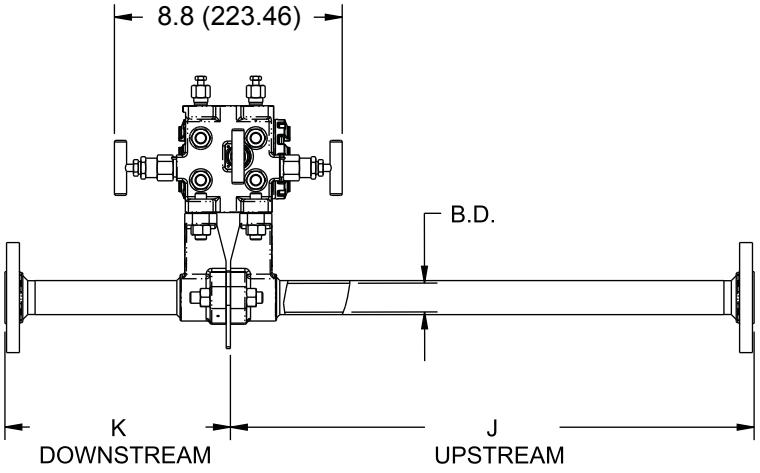

Front View

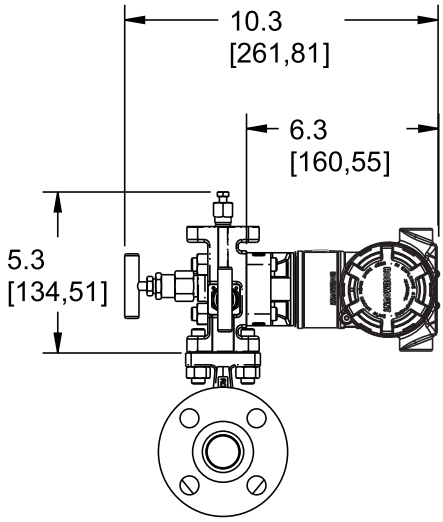

Dimensions are in inches (millimeters).

	Line Size		
Dimension	**1/2-in. (15 mm)**	**1-in. (25 mm)**	**1 1/2-in. (40 mm)**
J (Beveled/Threaded pipe ends)	12.54 (318.4)	20.24 (514.0)	28.44 (722.4)
J (RF slip-on, RTJ slip-on, RF-DIN slip on)	12.62 (320.4)	20.32 (516.0)	28.52 (724.4)
J (RF 150#, weld neck)	14.37 (364.9)	22.37 (568.1)	30.82 (782.9)
J (RF 300#, weld neck)	14.56 (369.8)	22.63 (574.7)	31.06 (789.0)
J (RF 600#, weld neck)	14.81 (376.0)	22.88 (581.0)	31.38 (797.1)
K (Beveled/Threaded pipe ends)	5.74 (145.7)	8.75 (222.2)	11.91 (302.6)
K (RF slip-on, RTJ slip-on, RF-DIN slip on)(1)	5.82 (147.8)	8.83 (224.2)	11.99 (304.6)
K (RF 150#, weld neck)	7.57 (192.3)	10.88 (276.3)	14.29 (363.1)
K (RF 300#, weld neck)	7.76 (197.1)	11.14 (282.9)	14.53 (369.2)
K (RF 600#, weld neck)	8.01 (203.4)	11.39 (289.2)	14.85 (377.2)
B.D. (Bore Diameter)	0.664 (16.87)	1.097 (27.86)	1.567 (39.80)
Dimensions are in inches (millimeters).			

(1) Downstream length shown here includes plate thickness of 0.162-in. (4.11 mm).

Enhanced 3051L Dimensional Drawings

2-in. Flange Configuring (Flush Mount Only)

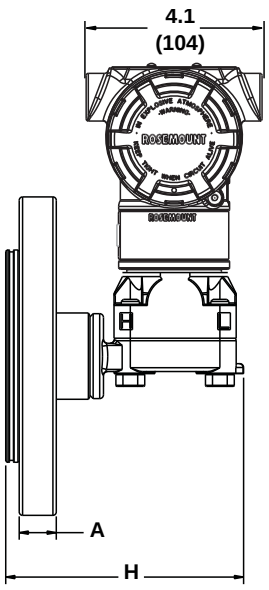

3- and 4-in. Flange Configuration

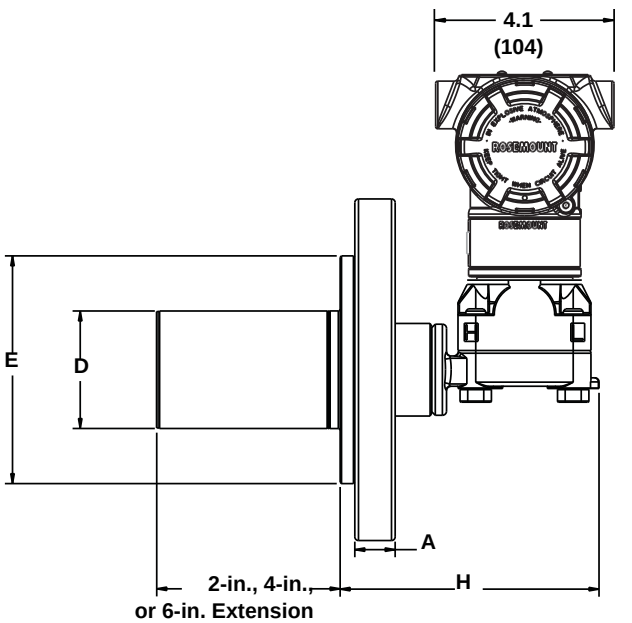

Optional Flushing Connection Ring (Lower Housing)

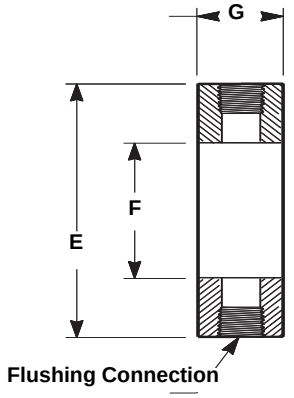

Diaphragm Assembly and Mounting Flange

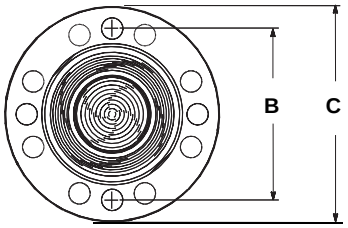

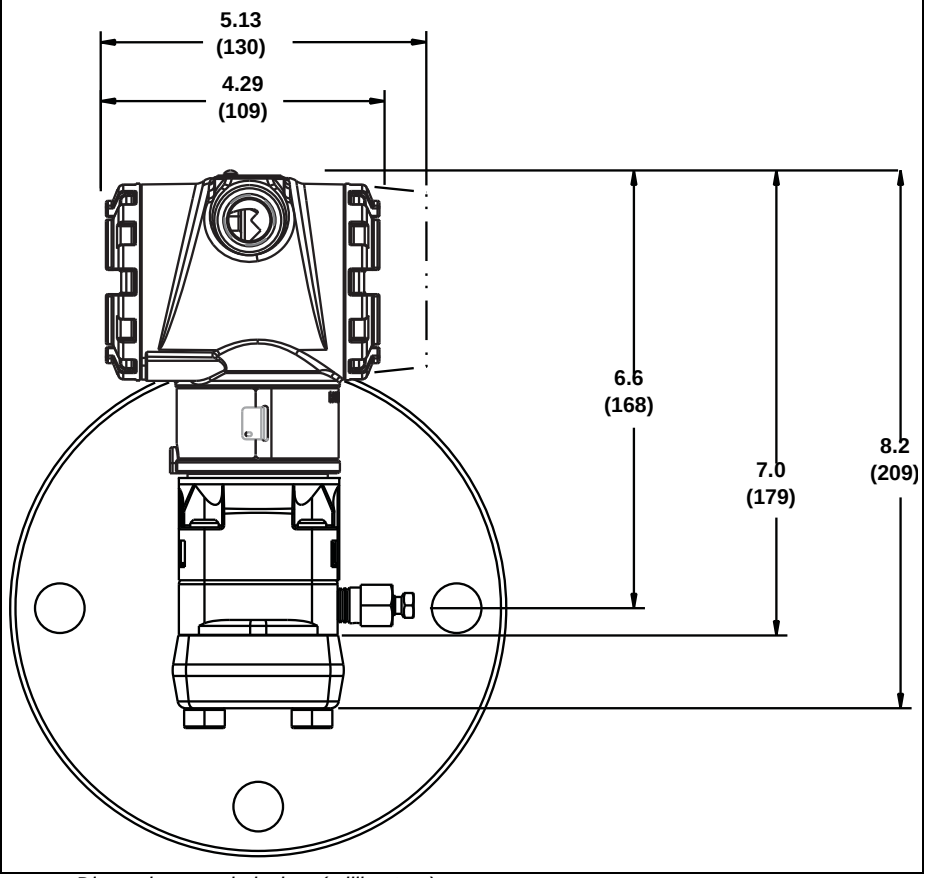

Dimensions are in inches (millimeters)

Table 23. 3051L Dimensional Specifications

Class[1]	Pipe Size	Flange Thickness A	Bolt Circle Diameter B	Outside Diameter C	No. of Bolts	Bolt Hole Diameter	Extension Diameter[1] D	O.D. Gasket Surface E
ASME B16.5 (ANSI) 150	2 (51)	0.69 (18)	4.75 (121)	6.0 (152)	4	0.75 (19)	NA	3.6 (92)
	3 (76)	0.88 (22)	6.0 (152)	7.5 (191)	4	0.75 (19)	2.58 (66)	5.0 (127)
	4 (102)	0.88 (22)	7.5 (191)	9.0 (229)	8	0.75 (19)	3.5 (89)	6.2 (158)
ASME B16.5 (ANSI) 300	2 (51)	0.82 (21)	5.0 (127)	6.5 (165)	8	0.75 (19)	NA	3.6 (92)
	3 (76)	1.06 (27)	6.62 (168)	8.25 (210)	8	0.88 (22)	2.58 (66)	5.0 (127)
	4 (102)	1.19 (30)	7.88 (200)	10.0 (254)	8	0.88 (22)	3.5 (89)	6.2 (158)
ASME B16.5 (ANSI) 600	2 (51)	1.00 (25)	5.0 (127)	6.5 (165)	8	0.75 (19)	NA	3.6 (92)
	3 (76)	1.25 (32)	6.62 (168)	8.25 (210)	8	0.88 (22)	2.58 (66)	5.0 (127)
DIN 2501 PN 10–40	DN 50	20 mm	125 mm	165 mm	4	18 mm	NA	4.0 (102)
DIN 2501 PN 25/40	DN 80	24 mm	160 mm	200 mm	8	18 mm	66 mm	5.4 (138)
	DN 100	24 mm	190 mm	235 mm	8	22 mm	89 mm	6.2 (158)
DIN 2501 PN 10/16	DN 100	20 mm	180 mm	220 mm	8	18 mm	89 mm	6.2 (158)

Dimensions are in inches (millimeters)

(1) Tolerance are 0.040 (1.02), - 0.020 (0.51)

Class[1]	Pipe Size	Process Side F	Lower Housing G		H
			1/4-in. NPT	1/2 -in. NPT	
ASME B16.5 (ANSI) 150	2 (51)	2.12 (54)	0.97 (25)	1.31 (33)	5.65 (143)
	3 (76)	3.6 (91)	0.97 (25)	1.31 (33)	5.65 (143)
	4 (102)	3.6 (91)	0.97 (25)	1.31 (33)	5.65 (143)
ASME B16.5 (ANSI) 300	2 (51)	2.12 (54)	0.97 (25)	1.31 (33)	5.65 (143)
	3 (76)	3.6 (91)	0.97 (25)	1.31 (33)	5.65 (143)
	4 (102)	3.6 (91)	0.97 (25)	1.31 (33)	5.65 (143)
ASME B16.5 (ANSI) 600	2 (51)	2.12 (54)	0.97 (25)	1.31 (33)	7.65 (194)
	3 (76)	3.6 (91)	0.97 (25)	1.31 (33)	7.65 (194)
DIN 2501 PN 10–40	DN 50	2.4 (61)	0.97 (25)	1.31 (33)	5.65 (143)
DIN 2501 PN 25/40	DN 80	3.6 (91)	0.97 (25)	1.31 (33)	5.65 (143)
	DN 100	3.6 (91)	0.97 (25)	1.31 (33)	5.65 (143)
DIN 2501 PN 10/16	DN 100	3.6 (91)	0.97 (25)	1.31 (33)	5.65 (143)

(1) Tolerances are 0.040 (1.02), –0.020 (0.51).

OPTIONS

Standard Configuration

Unless otherwise specified, transmitter is shipped as follows:

ENGINEERING UNITS	
***Differential/Gage*:**	inH_2O (Range 0, 1, 2, and 3) psi (Range 4 and 5)
***Absolute/3051TA*:**	psi (all ranges)
4 mA [(1)]:	0 (engineering units above)
20 mA [(1)]:	Upper range limit
Output:	Linear
Flange type:	Specified model code option
Flange material:	Specified model code option
O-ring material:	Specified model code option
Drain/vent:	Specified model code option
LCD Display:	Installed or none
Alarm[(1)]:	High
Software tag:	(Blank)

(1) Not applicable to FOUNDATION fieldbus or PROFIBUS PA.

Custom Configuration[(1)]

If Option Code C1 is ordered, the customer may specify the following data in addition to the standard configuration parameters.

- Output Information
- Transmitter Information
- LCD Display Configuration
- Hardware Selectable Information
- Signal Selection
- and more

Refer to the "Rosemount 3051 Configuration Data Sheet" document number 00806-0100-4007 for enhanced 3051, or 00806-0100-4001 for 3051.

Tagging (3 options available)

- Standard SST hardware tag is wired to the transmitter. Tag character height is 0.125 in. (3,18 mm), 56 characters maximum.
- Tag may be permanently stamped on transmitter nameplate upon request, 56 characters maximum.
- Tag may be stored in transmitter memory. Character limit is dependent on protocol.
  - HART Revision 5: 8 characters
  - HART Revision 7: 32 characters
  - FOUNDATION fieldbus: 32 characters
  - PROFIBUS PA: 32 characters

Commissioning Tag[(2)]

A temporary commissioning tag is attached to all transmitters. The tag indicates the device ID and allows an area for writing the location.

(1) Not applicable to FOUNDATION fieldbus or PROFIBUS PA protocols.

(2) Only applicable to FOUNDATION fieldbus.

Optional Rosemount 304, 305 or 306 Integral Manifolds

Factory assembled to 3051C and 3051T transmitters. Refer to the following Product Data Sheet (document number 00813-0100-4839 for Rosemount 304 and 00813-0100-4733 for Rosemount 305 and 306) for additional information.

Other Seals

Refer to Product Data Sheet 00813-0100-4016 for additional information.

Output Information

Output range points must be the same unit of measure. Available units of measure include:

Pressure			
atm	inH_20@4 °C[(1)]	g/cm^2	psi
mbar	mmH_2O	kg/cm^2	torr
bar	mmHg	Pa	cmH_20@4 °C[(1)]
inH_20	mmH_20@4 °C[(1)]	kPa	cmHG@0 °C[(1)]
inHg	ftH_20	MPa[(1)(2)]	ftH_20@60 °F[(1)]
hPa[(1)]	inH_20@60 °F[(1)]	kg/SqM[(1)]	mH_20@4 °C[(1)]
mHg@0 °C[(1)]	Psf[(1)]	ftH_2O@4C[(1)]	
Flow[(2)(3)]			
bbl	kg	cm^3	
ft^3	lb	m^3	
gal	L	ton	
Level[(3)]			
%	ft	cm	
in	mm		

(1) Available with enhanced 3051.

(2) Available on PROFIBUS PA.

(3) All flow units are available per second, minute, hour or day.

Display and Interface options

M4 Digital Display with Local Operator Interface (LOI)

- Available for enhanced 4-20 mA HART and PROFIBUS PA

M5 Digital Display

- 2-Line, 5-Digit LCD for standard 4-20 mA HART
- 2-Line, 8-Digit LCD for enhanced 4-20 mA HART, FOUNDATION fieldbus and PROFIBUS PA
- Direct reading of digital data for higher accuracy
- Displays user-defined flow, level, volume, or pressure units
- Displays diagnostic messages for local troubleshooting
- 90-degree rotation capability for easy viewing

Configuration Buttons[(1)]

Rosemount 3051 will ship with Analog Zero and Span buttons standard unless otherwise specified. Enhanced Rosemount 3051 requires option D4 (Analog Zero and Span), DZ (Digital Zero), or M4 (LOI) for local configuration buttons.

Transient Protection

T1 Integral Transient Protection Terminal Block
Meets IEEE C62.41, Category Location B

6 kV crest (0.5 μs - 100 kHz)

3 kA crest (8 × 20 microseconds)

6 kV crest (1.2 × 50 microseconds)

Bolts for Flanges and Adapters

- Options permit bolts for flanges and adapters to be obtained in various materials
- Standard material is plated carbon steel per ASTM A449, Type 1

L4 Austenitic 316 Stainless Steel Bolts

L5 ASTM A 193, Grade B7M Bolts

L6 Alloy K-500 Bolts

Conduit Plug

DO 316 SST Conduit Plug

Single 316 SST conduit plug replaces carbon steel plug

Rosemount 3051C Coplanar Flange and 3051T Bracket Option

B4 Bracket for 2-in. Pipe or Panel Mounting

- For use with the standard Coplanar flange configuration
- Bracket for mounting of transmitter on 2-in. pipe or panel
- Stainless steel construction with stainless steel bolts

Rosemount 3051C Traditional Flange Bracket Options

B1 Bracket for 2-in. Pipe Mounting

- For use with the traditional flange option
- Bracket for mounting on 2-in. pipe
- Carbon steel construction with carbon steel bolts
- Coated with polyurethane paint

B2 Bracket for Panel Mounting

- For use with the traditional flange option
- Bracket for mounting transmitter on wall or panel
- Carbon steel construction with carbon steel bolts
- Coated with polyurethane paint

B3 Flat Bracket for 2-in. Pipe Mounting

- For use with the traditional flange option
- Bracket for vertical mounting of transmitter on 2-in. pipe
- Carbon steel construction with carbon steel bolts
- Coated with polyurethane paint

B7 B1 Bracket with SST Bolts

- Same bracket as the B1 option with Series 300 stainless steel bolts

B8 B2 Bracket with SST Bolts

- Same bracket as the B2 option with Series 300 stainless steel bolts

B9 B3 Bracket with SST Bolts

- Same bracket as the B3 option with Series 300 stainless steel bolts

BA Stainless Steel B1 Bracket with SST Bolts

- B1 bracket in stainless steel with Series 300 stainless steel bolts

BC Stainless Steel B3 Bracket with SST Bolts

- B3 bracket in stainless steel with Series 300 stainless steel bolts

Standard Terms and Conditions of Sale can be found at www.rosemount.com\terms_of_sale
The Emerson logo is a trade mark and service mark of Emerson Electric Co.
Rosemount, Annubar, ProPlate, and the Rosemount logotype are registered trademarks of Rosemount Inc.
PlantWeb is a registered trademark of one of the Emerson Process Management group of companies.
Instrument Toolkit is a registered trademark of Emerson Process Management.
Complete Point Solutions, Coplanar and Multivariable are trademarks of Rosemount Inc.
HART is a registered trademark of the HART Communications Foundation.
Syltherm 800, Dow Corning, and D.C. are registered trademarks of Dow Corning Co.
Neobee M-20 is a registered trademark of Stephan Chemical Co.
The 3-A symbol is a registered trademark of the 3-A Sanitary Standards Symbol Council.
FOUNDATION fieldbus is a registered trademark of the Fieldbus Foundation.
Profibus PA is a registered trademark of Profibus International.
Fluorinert is a registered trademark of 3M Company.

© 2012 Rosemount Inc. All rights reserved.

Rosemount Measurement
8200 Market Boulevard
Chanhassen, MN 55317 USA
T (U.S.) 1-800-999-9307
T (International) (952) 906-8888
F (952) 906-8889
www.rosemount.com

Emerson Process Management
Blegistrasse 23
P.O. Box 1046
CH 6341 Baar
Switzerland
T +41 (0) 41 768 6111
F +41 (0) 41 768 6300

Emerson FZE
P.O. Box 17033
Jebel Ali Free Zone
Dubai UAE
T +971 4 883 5235
F +971 4 883 5312

Emerson Process Management Asia Pacific Pte Ltd
1 Pandan Crescent
Signapore 128461
T +65 6777 8211
F +65 6777 0947
Service Support Hotline: +65 6770 8711
Email: Enquiries@AP.EmersonProcess.com

EMERSON
Process Management

Quick Installation Guide
00825-0100-4001, Rev HA
December 2010

Rosemount 3051

Rosemount 3051 Pressure Transmitter
with 4-20 mA HART and 1-5 Vdc Low Power Protocol

Rosemount 3051CF Series Flowmeter Transmitter
with 4-20 mA HART and 1-5 Vdc Low Power Protocol

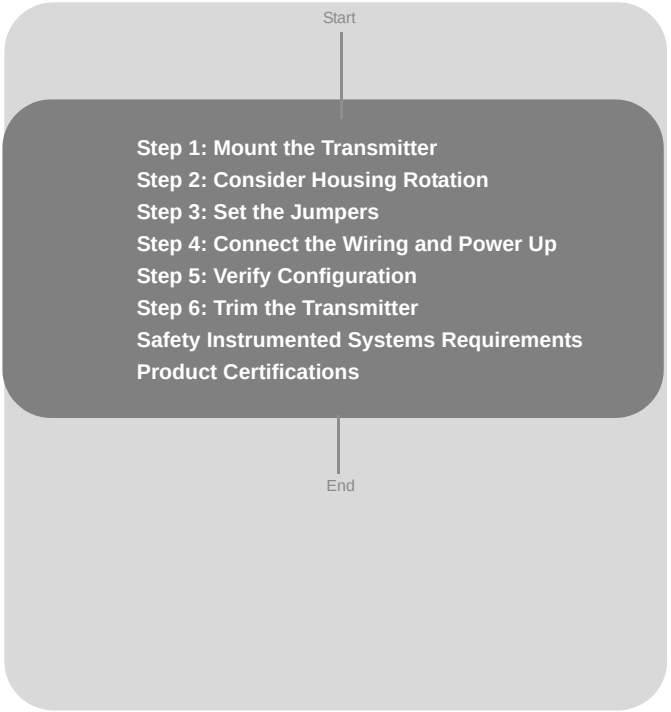

HART COMMUNICATION PROTOCOL CE

ROSEMOUNT

www.rosemount.com

EMERSON Process Management

© 2010 Rosemount Inc. All rights reserved. All marks property of owner. Rosemount and the Rosemount logotype are registered trademarks of Rosemount Inc.

Rosemount Inc.
8200 Market Boulevard
Chanhassen, MN USA 55317
T (US) (800) 999-9307
T (Intnl) (952) 906-8888
F (952) 949-7001

Emerson Process Management Asia Pacific Private Limited
1 Pandan Crescent
Singapore 128461
T (65) 6777 8211
F (65) 6777 0947/65 6777 0743

Emerson Process Management GmbH & Co. OHG
Argelsrieder Feld 3
82234 Wessling
Germany
T 49 (8153) 9390
F49 (8153) 939172

Beijing Rosemount Far East Instrument Co., Limited
No. 6 North Street,
Hepingli, Dong Cheng District
Beijing 100013, China
T (86) (10) 6428 2233
F (86) (10) 6422 8586

⚠ IMPORTANT NOTICE

This installation guide provides basic guidelines for Rosemount 3051 transmitters. It does not provide instructions for configuration, diagnostics, maintenance, service, troubleshooting, Explosion-Proof, Flame-Proof, or intrinsically safe (I.S.) installations. Refer to the 3051 reference manual (document number 00809-0100-4001) for more instruction. This manual is also available electronically on www.emersonprocess.com/rosemount.

⚠ WARNING

Explosions could result in death or serious injury:

Installation of this transmitter in an explosive environment must be in accordance with the appropriate local, national, and international standards, codes, and practices. Please review the approvals section of the 3051 reference manual for any restrictions associated with a safe installation.

- Before connecting a HART-based communicator in an explosive atmosphere, make sure the instruments in the loop are installed in accordance with intrinsically safe or non-incendive field wiring practices.
- In an Explosion-Proof/Flame-Proof installation, do not remove the transmitter covers when power is applied to the unit.

Process leaks may cause harm or result in death.

- To avoid process leaks, only use the o-ring designed to seal with the corresponding flange adapter.

Electrical shock can result in death or serious injury.

- Avoid contact with the leads and the terminals. High voltage that may be present on leads can cause electrical shock.

Conduit/Cable Entries

- Unless marked, the conduit/cable entries in the transmitter housing use a $^{1}/_{2}$-14 NPT thread form. Only use plugs, adapters, glands, or conduit with a compatible thread form when closing these entries.

STEP 1: MOUNT THE TRANSMITTER

Liquid Flow Applications

1. Place taps to the side of the line.
2. Mount beside or below the taps.
3. Mount the transmitter so that the drain/vent valves are oriented upward.

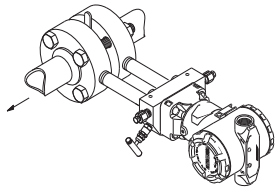

Gas Flow Applications

1. Place taps in the top or side of the line.
2. Mount beside or above the taps.

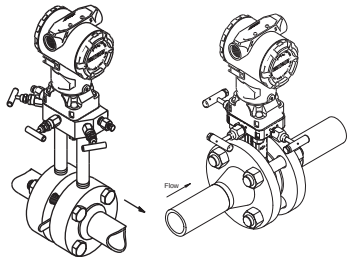

Steam Flow Applications

1. Place taps to the side of the line.
2. Mount beside or below the taps.
3. Fill impulse lines with water.

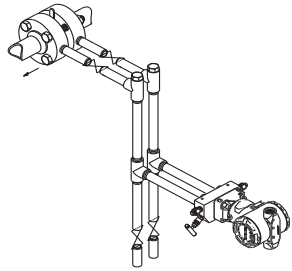

STEP 1 CONTINUED...

Panel Mount[1] **Pipe Mount**

Coplanar Flange

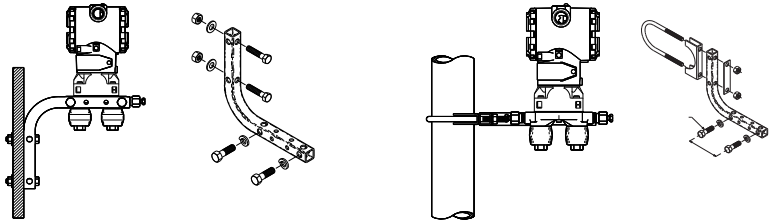

Traditional Flange

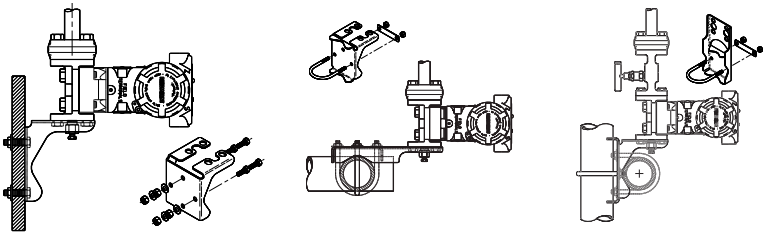

Rosemount 3051T

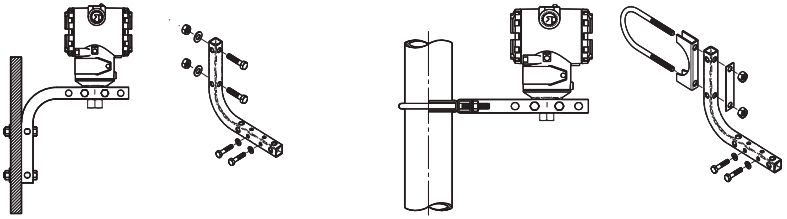

Rosemount 3051H

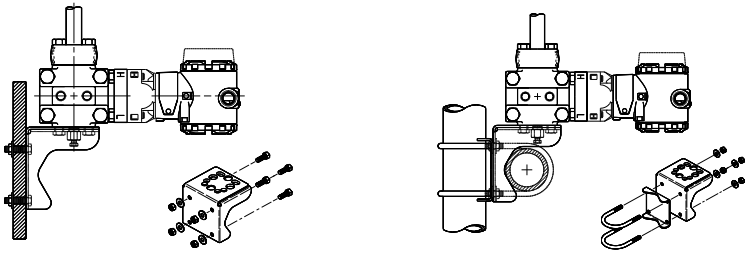

(1) Panel bolts are customer supplied.

STEP 1 CONTINUED...

Bolting Considerations

If the transmitter installation requires assembly of the process flanges, manifolds, or flange adapters, follow these assembly guidelines to ensure a tight seal for optimal performance characteristics of the transmitters. Use only bolts supplied with the transmitter or sold by Emerson as spare parts. Figure 1 illustrates common transmitter assemblies with the bolt length required for proper transmitter assembly.

Figure 1. Common Transmitter Assemblies

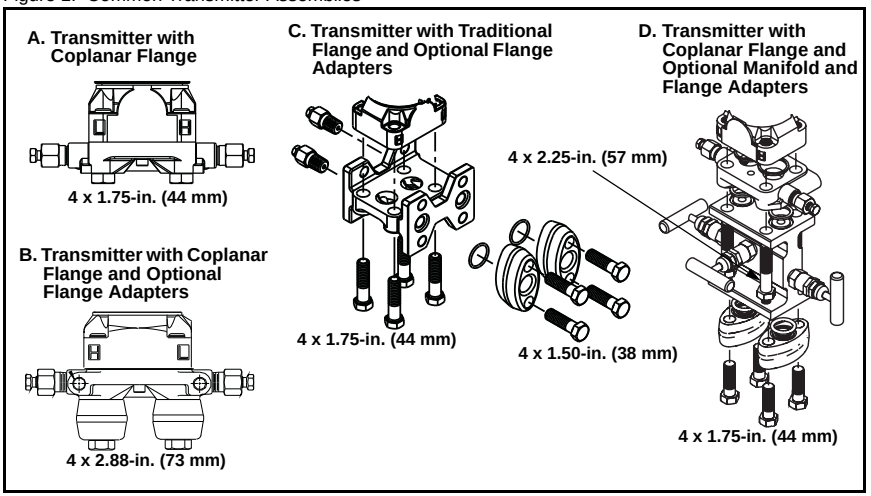

Bolts are typically carbon steel or stainless steel. Confirm the material by viewing the markings on the head of the bolt and referencing Figure 2. If bolt material is not shown in Figure 2, contact the local Emerson Process Management representative for more information.

Use the following bolt installation procedure:

1. Carbon steel bolts do not require lubrication and the stainless steel bolts are coated with a lubricant to ease installation. However, no additional lubricant should be applied when installing either type of bolt.
2. Finger-tighten the bolts.
3. Torque the bolts to the initial torque value using a crossing pattern. See Figure 2 for initial torque value.
4. Torque the bolts to the final torque value using the same crossing pattern. See Figure 2 for final torque value.
5. Verify that the flange bolts are protruding through the isolator plate before applying pressure.

STEP 1 CONTINUED...

Figure 2. Torque values for the flange and flange adapter bolts

Bolt Material	Head Markings	Initial Torque	Final Torque
Carbon Steel (CS)		300 in.-lbs.	650 in.-lbs.
Stainless Steel (SST)	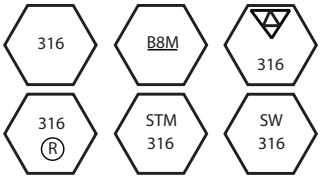	150 in.-lbs.	300 in.-lbs.

O-rings with Flange Adapters

⚠ WARNING

Failure to install proper flange adapter O-rings may cause process leaks, which can result in death or serious injury. The two flange adapters are distinguished by unique O-ring grooves. Only use the O-ring that is designed for its specific flange adapter, as shown below.

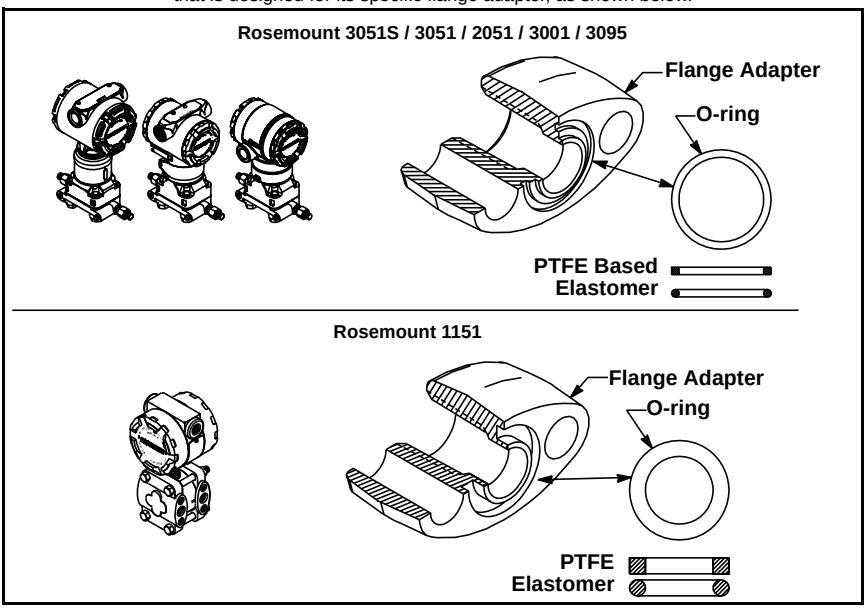

⚠ Whenever the flanges or adapters are removed, visually inspect the o-rings. Replace them if there are any signs of damage, such as nicks or cuts. If you replace the o-rings, re-torque the flange bolts and alignment screws after installation to compensate for seating of the PTFE o-ring.

Inline Gage Transmitter Orientation

The low side pressure port (atmospheric reference) on the inline gage transmitter is located in the neck of the transmitter, behind the housing. The vent path is 360° around the transmitter between the housing and sensor. (See Figure 3.)

Keep the vent path free of any obstruction, including but not limited to paint, dust, and lubrication by mounting the transmitter so that the process can drain away.

Figure 3. Inline Gage Low Side Pressure Port

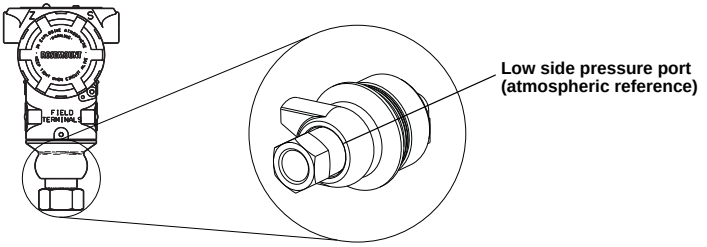

STEP 2: CONSIDER HOUSING ROTATION

To improve field access to wiring or to better view the optional LCD display:

1. Loosen the housing rotation set screw.
2. First rotate the housing clockwise to the desired location. If the desired location cannot be achieved due to thread limit, rotate the housing counter clockwise to the desired location (up to 360° from thread limit).
3. Retighten the housing rotation set screw.

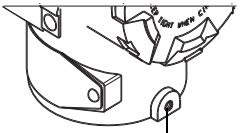

STEP 3: SET THE JUMPERS

If alarm and security jumpers are not installed, the transmitter will operate normally with the default alarm condition alarm *high* and the security *off*.

1. If the transmitter is installed, secure the loop, and remove power.
2. Remove the housing cover opposite the field terminal side. Do not remove the instrument cover in explosive atmospheres when the circuit is live.
3. Reposition the jumper. Avoid contact with the leads and the terminals. See Figure 4 for the location of the jumper and the ON and OFF positions.

Reattach the transmitter cover. The cover must be fully engaged to comply with explosion-proof requirements.

Figure 4. Transmitter Electronics Board

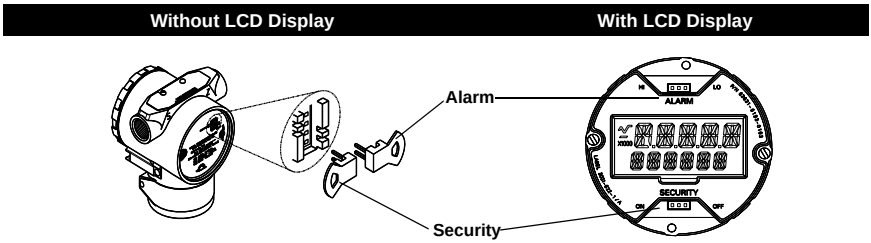

STEP 4: CONNECT THE WIRING AND POWER UP

Use the following steps to wire the transmitter:

1. Remove the housing cover on the FIELD TERMINALS side.
2. Connect the positive lead to the "+" terminal (PWR/COMM) and the negative lead to the "–" terminal.
3. Ensure proper grounding. It is important that the instrument cable shield:
   - be trimmed close and insulated from touching the transmitter housing
   - be connected to the next shield if cable is routed through a junction box
   - be connected to a good earth ground at the power supply end

NOTE

Do not connect the powered signal wiring to the test terminals. Power could damage the test diode in the test connection. Shielded twisted pair cable should be used for best results. Use 24 AWG or larger wire and do not exceed 5,000 feet (1500 meters).

4. Plug and seal unused conduit connections.
5. If applicable, install wiring with a drip loop. Arrange the drip loop so the bottom is lower than the conduit connections and the transmitter housing.
6. Replace the housing cover.

Figure 5 shows wiring connections necessary to power a 3051 and enable communications with a hand-held Field Communicator. For low-power transmitters, refer to the reference manual.

Figure 5. Transmitter Wiring Diagrams (4–20 mA)

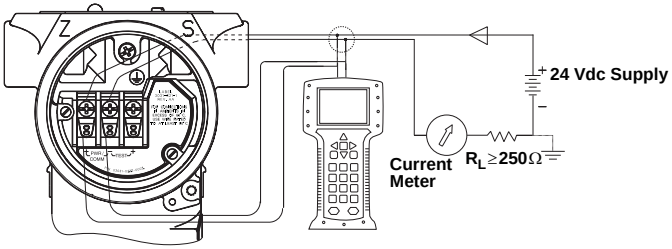

Figure 6. Low Power Transmitter Wiring

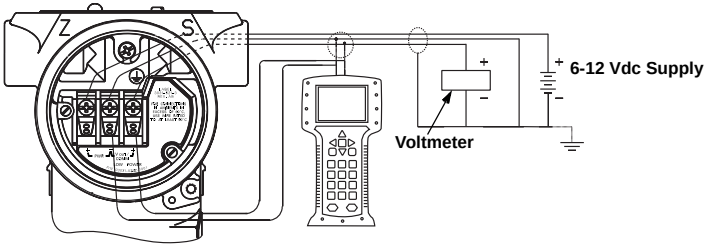

Installation of the transient protection terminal block does not provide transient protection unless the 3051 case is properly grounded.

STEP 4 CONTINUED...

Signal Wiring Grounding

Do not run signal wiring in conduit or open trays with power wiring, or near heavy electrical equipment. Grounding terminations are provided on the outside of the electronics housing and inside the Terminal Compartment. These grounds are used when transient protect terminal blocks are installed or to fulfill local regulations. See Step 2 below for more information on how the cable shield should be grounded.

1. Remove the Field Terminals housing cover.
2. Connect the wiring pair and ground as indicated in Figure 7. The cable shield should:
   a. Be trimmed close and insulated from touching the transmitter housing.
   b. Continuously connect to the termination point.
   c. Be connected to a good earth ground at the power supply end.

Figure 7. Wiring

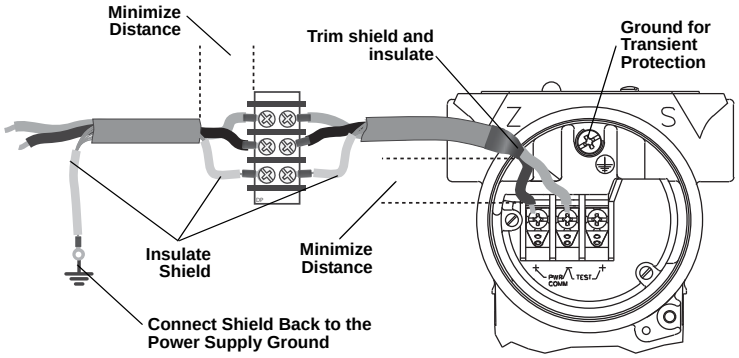

3. Replace the housing cover. It is recommended that the cover be tightened until there is no gap between the cover and the housing.
4. Plug and seal unused conduit connections.

Power Supply for 4-20 mA HART

Transmitter operates on 10.5 - 42.4 Vdc. The dc power supply should provide power with less than two percent ripple.

Figure 8. Load Limitation

Maximum Loop Resistance = 43.5 * (Power Supply Voltage – 10.5)

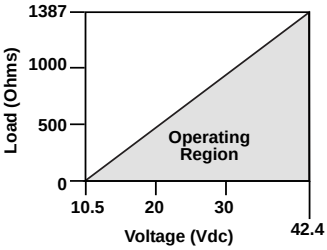

The Field Communicator requires a minimum loop resistance of 250Ω for communication.

The total resistance load is the sum of the resistance of the signal leads and the load resistance of the controller, indicator, and related pieces. Note that the resistance of intrinsic safety barriers, if used, must be included.

Power Supply for 1-5 Vdc HART Low Power

Low power transmitters operate on 6–12 Vdc. The dc power supply should provide power with less than two percent ripple. The V_{out} load should be 100 kW or greater.

STEP 5: VERIFY CONFIGURATION

Field Communicator User Interface

The Traditional Interface - Device Revision 3 and DD Revision 2 Fast Key Sequence can be found on page 13.

Figure 9. Traditional Interface - Device Revision 3 and DD Revision 2

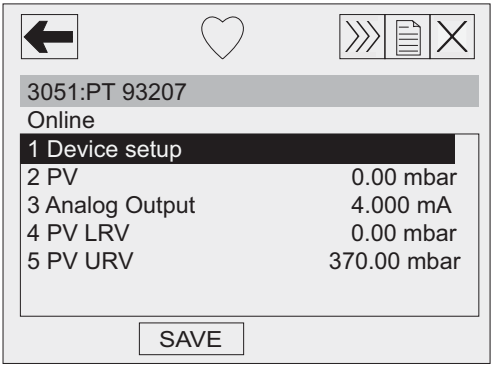

The Device Dashboard - Device Revision 3 and DD Revision 6 Fast Key Sequence can be found on page 14.

Figure 10. Device Dashboard - Device Revision 3 and DD Revision 6

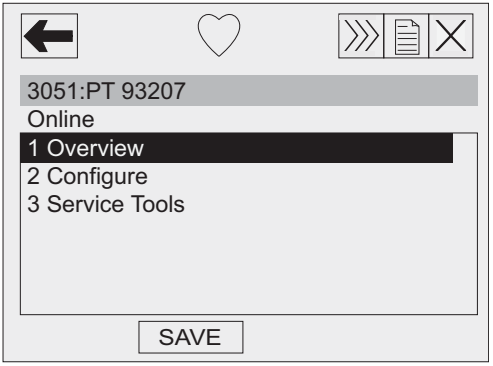

NOTE:
A check (✓) indicates the basic configuration parameters. At minimum, these parameters should be verified as part of the configuration and startup procedure.

Table 1. Traditional Interface - Device Revision 3 and DD Revision 2 Fast Key Sequence

	Function	Fast Key Sequence
✓	Alarm and Saturation Levels	1, 4, 2, 7
	Analog Output Alarm Type	1, 4, 3, 2, 4
	Burst Mode Control	1, 4, 3, 3, 3
	Burst Operation	1, 4, 3, 3, 3
	Custom Meter Configuration	1, 3, 7, 2
	Custom Meter Value	1, 4, 3, 4, 3
✓	Damping	1, 3, 6
	Date	1, 3, 4, 1
	Descriptor	1, 3, 4, 2
	Digital To Analog Trim (4-20 mA Output)	1, 2, 3, 2, 1
	Disable Local Span/Zero Adjustment	1, 4, 4, 1, 7
	Field Device Information	1, 4, 4, 1
	Full Trim	1, 2, 3, 3
	Keypad Input – Rerange	1, 2, 3, 1, 1
	Local Zero and Span Control	1, 4, 4, 1, 7
	Loop Test	1, 2, 2
	Lower Sensor Trim	1, 2, 3, 3, 2
	Message	1, 3, 4, 3
	Meter Options	1, 4, 3, 4
	Number of Requested Preambles	1, 4, 3, 3, 2
	Poll Address	1, 4, 3, 3, 1
	Poll a Multidropped Transmitter	Left Arrow, 4, 1, 1
✓	Range Values	1, 3, 3
	Rerange	1, 2, 3, 1
	Scaled D/A Trim (4–20 mA Output)	1, 2, 3, 2, 2
	Self Test (Transmitter)	1, 2, 1, 1
	Sensor Info	1, 4, 4, 2
	Sensor Temperature	1, 1, 4
	Sensor Trim Points	1, 2, 3, 3, 5
	Status	1, 2, 1, 1
✓	Tag	1, 3, 1
✓	Transfer Function (Setting Output Type)	1, 3, 5
	Transmitter Security (Write Protect)	1, 3, 4, 4
	Trim Analog Output	1, 2, 3, 2
✓	Units (Process Variable)	1, 3, 2
	Upper Sensor Trim	1, 2, 3, 3, 3
	Zero Trim	1, 2, 3, 3, 1

Table 2. Device Dashboard - Device Revision 3 and DD Revision 6 Fast Key Sequence

	Function	Fast Key Sequence
✓	Alarm and Saturation Levels	1,7,5
	Burst Mode Control	2,2,4,1
	Burst Option	2,2,4,2
	Custom Display Configuration	2,2,3
✓	Damping	2,2,1,2
	Date	2,2,6,1,4
	Descriptor	2,2,6,1,5
	Digital to Analog Trim (4 - 20 mA Output)	3,4,2,1
	Disable Zero & Span Adjustment	2,2,5,2
	Rerange with Keypad	2,2,2,1
	Loop Test	3,5,1
	Lower Sensor Trim	3,4,1,2
	Message	2,2,6,1,6
✓	Range Values	2,2,2
	Scaled D/A Trim (4 - 20 mA Output)	3,4,2,2
	Sensor Temperature/Trend (3051S)	2,2,1,6
✓	Tag	2,2,6,1,1
✓	Transfer Function	2,2,1,3
	Transmitter Security (Write Protect)	2,2,5,1
✓	Units	2,2,1,1
	Upper Sensor Trim	3,4,1,1
	Zero Trim	3,4,1,3

STEP 6: TRIM THE TRANSMITTER

NOTE
Transmitters are shipped fully calibrated per request or by the factory default of full scale (span = upper range limit).

Zero Trim

A zero trim is a single-point adjustment used for compensating mounting position effects. When performing a zero trim, ensure that the equalizing valve is open and all wet legs are filled to the correct level.

There are two methods to compensate for mounting effects:

- Field Communicator
- Transmitter Zero Adjustment Buttons

Select the appropriate method and follow instructions below.

Using the Field Communicator

If zero offset is within 3% of URL, follow the “Using the Field Communicator” instructions below. This zero trim will affect the 4-20 mA value, the HART PV, and the display value.

Steps

1. Equalize or vent the transmitter and connect Field Communicator.
2. At the menu, input the HART Fast Key sequence (refer to Table 1 or Table 2).
3. Follow the commands to perform a zero trim.

Using the Transmitter Zero Adjustment Buttons

Using the Transmitter Zero Adjustment Buttons, the Lower Range Value (LRV) will be set to the pressure applied to the transmitter. This adjustment will affect the 4-20 mA value only. Perform the following steps to perform a rerange using the zero adjustment buttons.

1. Loosen the certifications label screw and slide the label to expose the zero adjustment buttons.
2. Set the 4 mA point by pressing the zero button for 2 seconds. Verify that the output is 4 mA. The optional LCD will display ZERO PASS.

Zero Adjustment Buttons

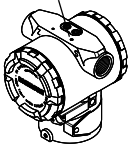

SAFETY INSTRUMENTED SYSTEMS

The following section applies to 3051C transmitters used in SIS applications.

Installation

No special installation is required in addition to the standard installation practices outlined in this document. Always ensure a proper seal by installing the electronics housing cover(s) so that metal contacts metal.

The loop must be designed so the terminal voltage does not drop below 10.5 Vdc when the transmitter output is 22.5 mA.

Position the security switch to the “ON” position to prevent accidental or deliberate change of configuration data during normal operation.

Configuration

Use any HART-compliant master to communicate with and verify configuration of the 3051.

User-selected damping will affect the transmitters ability to respond to changes in the applied process. The *damping value + response time* must not exceed the loop requirements.

NOTES

1. Transmitter output is not safety-rated during the following: configuration changes, multidrop, loop test. Alternative means should be used to ensure process safety during transmitter configuration and maintenance activities.

2. DCS or safety logic solver must be configured to match transmitter configuration. Figure 11 identifies the two alarm levels available and their operation values. Position the alarm switch to the required HI or LO alarm position.

Figure 11. Alarm Levels

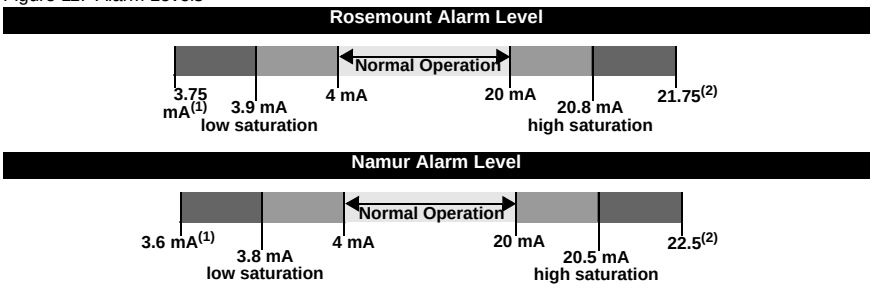

(1) Transmitter Failure, hardware alarm in LO position.
(2) Transmitter Failure, hardware alarm in HI position.

NOTE

Some detected faults are indicated on the analog output at a level above high alarm regardless of the alarm switch selection.

Operation and Maintenance

Proof Test and Inspection

The following proof tests are recommended. Proof test results and corrective actions taken must be documented at *http://rosemount.d1asia.ph/rosemount/safety/ReportAFailure_newweb.asp* in the event that an error is found in the safety functionality.

Use the fast key sequences in Table 1 on page 13 or Table 2 on page 14 to perform a Loop Test, Analog Output Trim, or Sensor Trim. See the 3051 reference manual (00809-0100-4001) for additional information.

Proof Test 1 (1)

This proof test will detect 59.6% of DU failures not detected by the 3051 automatic diagnostics.

1. Execute the Master Reset command to initiate start-up diagnostics.
2. Enter the milliampere value representing a high alarm state
3. Check the reference meter to verify the mA output corresponds to the entered value.
4. Enter the milliampere value representing a low alarm state
5. Check the reference meter to verify the mA output corresponds to the entered value.

Proof-Test 2 (2)

This proof test, when combined with the Five-year Proof-Test, will detect 94.6% of DU failures not detected by the 3051 automatic diagnostics.

1. Execute the Master Reset command to initiate start-up diagnostics.
2. Perform a minimum two point sensor calibration check using the 4-20 mA range points as the calibration points.
3. Check the reference mA meter to verify the mA output corresponds to the pressure input value.
4. If necessary, use one of the “Trim” procedures available in the 3051 reference manual to calibrate.

NOTE
The user determines the proof-test requirements for impulse piping.

Visual Inspection

Not required.

Special Tools

Not required

Product Repair

All failures detected by the transmitter diagnostics or by the proof-test must be reported. Feedback can be submitted electronically at http://rosemount.d1asia.ph/rosemount/safety/ReportAFailure_newweb.asp.

The 3051 is repairable by major component replacement. Follow the instructions in the 3051 reference manual (document number 00809-0100-4001) for additional information.

(1) This test will detect approximately 59.6% of possible DU failures in the transmitter.
(2) This test will detect approximately 94.6% of possible DU failures in the transmitter.

Reference

Specifications

The 3051 must be operated in accordance to the functional and performance specifications provided in the 3051 reference manual.

Failure Rate Data

The FMEDA report includes failure rates and common cause Beta factor estimates. This report is available at www.emersonprocess.com/rosemount.

3051 Safety Failure Values

Safety accuracy: 0.065%
Safety response time: 100 msec

Product Life

50 years – based on worst case component wear-out mechanisms – not based on wear-out process wetted materials

PRODUCT CERTIFICATIONS

Approved Manufacturing Locations

Emerson Process Management - Rosemount Inc. — Chanhassen, Minnesota, USA
Emerson Process Management GmbH & Co. OHG — Wessling, Germany
Emerson Process Management Asia Pacific Private Limited — Singapore
Beijing Rosemount Far East Instrument Col., Limited — Beijing, China
Emerson Process Management — Daman, India

European Directive Information

The EC declaration of conformity can be found on page 23. The most recent revision can be found at www.emersonprocess.com.

Ordinary Location Certification for Factory Mutual

As standard, the transmitter has been examined and tested to determine that the design meets basic electrical, mechanical, and fire protection requirements by FM, a nationally recognized testing laboratory (NRTL) as accredited by the Federal Occupational Safety and Health Administration (OSHA).

Hazardous Locations Certifications

North American Certifications

FM Approvals

E5 Explosion-Proof for Class I, Division 1, Groups B, C, and D. Dust-Ignition-Proof for Class II, Division 1, Groups E, F, and G. Dust-Ignition-Proof for Class III, Division 1. T5 (Ta = 85 °C), Factory Sealed, Enclosure Type 4x

I5 Intrinsically Safe for use in Class I, Division 1, Groups A, B, C, and D; Class II, Division 1, Groups E, F, and G; Class III, Division 1 when connected per Rosemount drawing 03031-1019 and 00375-1130 (When used with a Field Communicator); Non-incendive for Class I, Division 2, Groups A, B, C, and D.

Temperature Code: T4 (Ta = 40 °C), T3 (Ta = 85 °C), Enclosure Type 4x
For input parameters see control drawing 03031-1019.

Canadian Standards Association (CSA)

All CSA hazardous approved transmitters are certified per ANSI/ISA 12.27.02-2003.

E6 Explosion-Proof for Class I, Division 1, Groups B, C, and D. Dust-Ignition-Proof for Class II and Class III, Division 1, Groups E, F, and G. Suitable for Class I, Division 2 Groups A, B, C, and D for indoor and outdoor hazardous locations. Enclosure type 4X, factory sealed. Single Seal.

C6 Explosion-Proof and intrinsically safe approval. Intrinsically safe for Class I, Division 1, Groups A, B, C, and D when connected in accordance with Rosemount drawings 03031-1024. Temperature Code T3C.

Explosion-Proof for Class I, Division 1, Groups B, C, and D. Dust-Ignition-Proof for Class II and Class III, Division 1, Groups E, F, and G. Suitable for Class I, Division 2 Groups A, B, C, and D hazardous locations. Enclosure type 4X, factory sealed. Single Seal.

For input parameters see control drawing 03031-1024.

European Certifications

I1 ATEX Intrinsic Safety and Dust
Certification No.: BAS 97ATEX1089X ⟨Ex⟩ II 1 GD
Ex ia IIC T4 (–60 ≤ T_a ≤ +70 °C)
Dust Rating: Ex tD A20 T80 °C (–20 ≤ T_a ≤ 40 °C) IP66
CE 1180

Table 3. Input Parameters

U_i = 30 V
I_i = 200 mA
P_i = 0.9 W
C_i = 0.012 µF

Special Conditions for Safe Use (X):

1. The apparatus is not capable of withstanding the 500 V insulation test required by clause 6.3.12 of EN 60079-11:2007. This must be taken into account when installing the apparatus.
2. The enclosure may be made of aluminum alloy and given a protective polyurethane paint finish; however care should be taken to protect it from impact or abrasion if located in Zone 0.

N1 ATEX Non-incendive/Type n and Dust
Certification No.: BAS 00ATEX3105X ⟨Ex⟩ II 3 GD
Ex nL IIC T4 (–40 ≤ T_a ≤ 70 °C)
U_i = 55 Vdc max
Dust rating: Ex tD A22 T80 °C (–20 ≤ T_a ≤ 40 °C) IP66

Special Conditions for Safe Use (X):

When the optional transient protection terminal block is installed, the apparatus is not capable of withstanding a 500 V r.m.s. test to case. This must be taken into account on any installation in which it is used, for example by assuring that the supply to the apparatus is galvanically isolated.

E8 ATEX Flame-Proof and Dust
Certification No.: KEMA 00ATEX2013X Ⓔx II 1/2 GD
Ex d IIC T6 (–50 ≤ T_a ≤ 65 °C)
Ex d IIC T5 (–50 ≤ T_a ≤ 80 °C)
Dust rating Ex tD A20/A21 T90 °C, IP66
CE 1180
Vmax = 55 Vdc

Special Conditions for Safe Use (X):
This device contains a thin wall diaphragm. Installation, maintenance, and use shall take into account the environmental conditions to which the diaphragm will be subjected. The manufacturer's instructions for installation and maintenance shall be followed in detail to assure safety during its expected lifetime.
For more information on the dimensions of the flameproof joints, contact the manufacturer.

Japanese Certifications

E4 TIIS Flame-Proof
Ex d IIC T6

Certificate	Description
C15850	3051C/D/1 4–20 mA HART — no meter
C15851	3051C/D/1 4–20 mA HART — with meter
C15854	3051T/G/1 4–20 mA HART, SST, Silicon — no meter
C15855	3051T/G/1 4–20 mA HART, Alloy C-276, Silicon — no meter
C15856	3051T/G/1 4–20 mA HART, SST, Silicon — with meter
C15857	3051T/G/1 4–20 mA HART, Alloy C-276, Silicon — with meter

I4 TIIS Intrinsic Safety
Ex ia IIC T4

Certificate	Description
C16406	3051CD/CG

Australian Certifications

I7 SAA Intrinsic Safety
Certification No.: AUS EX 1249X
Ex ia IIC T4 (T_{amb} = 70 °C)
IP66
When connected per Rosemount drawing 03031-1026

The apparatus may only be used with a passive current limited power source Intrinsic Safety application. The power source must be such that Po ≤ (Uo * Io) / 4. Modules using transient protection in the terminal assembly (T1 transient protection models) the apparatus enclosure is to be electrically bonded to the protective earth. The conductor used for the connection shall be equivalent to a copper conductor of 4 mm2 minimum cross-sectional area.

Table 4. Input Parameters

U_i = 30 V
I_i = 200 mA
I_i = 160 mA (output code A with T1)
P_i = 0.9 W
C_i = 0.01 µF
C_i = 0.042 µF (output code M)
L_i = 10 µH
L_i = 1.05 mH (output code A with T1)
L_i = 0.75 mH (output code M with T1)

E7 SAA Explosion-Proof (Flame-Proof)
Certification No.: AUS EX 03.1347X
Ex d IIC T6 (T_{amb} = 40 °C)
Ex d IIC T5 (T_{amb} = 80 °C)
DIP T6 (T_{amb} = 40 °C)
DIP T5 (T_{amb} = 80 °C)
IP66

Special Conditions for Safe Use (X):
It is a condition of safe use for transmitter enclosures having cable entry thread other than metric conduit thread that the equipment be utilized with an appropriate certified thread adaptor.

N7 SAA Type n (Non-sparking)
Certification No.: AUS EX 1249X
Ex n IIC T4 (T_{amb} = 70 °C)
IP66

Special Conditions for Safe Use (X):
Where the equipment is installed such that there is an unused conduit entry, it must be sealed with a suitable blanking plug to maintain the IP40 degree of protection. Any blanking plug used with the equipment shall be of a type which requires the use of a tool to effect its removal. Voltage source shall not exceed 35 Vdc.

Inmetro Certifications

E2 Flameproof
Certificate number (manufactured in Chanhassen, MN): Ex-073/971
Certificate number (manufactured in Brazil): Ex-1383/07
BR-Ex d IIC T6/T5

I2 Intrinsic Safety
Certificate number (manufactured in Chanhassen, MN): Ex-072/971X
Certificate number (manufactured in Brazil): Ex-1412/07X
BR- Ex ia IIC T4

China (NEPSI) Certifications

E3 China Intrinsic Safety and Dust
NEPSI Certification No.: GYJ091065X
Ex d II C T5/T6
DIP A21 T_A T90 °C
IP66

Refer to Appendix B of the 3051 Reference Manual (document number 00809-0100-4001) for Special Conditions for Safe Use

I3 Intrinsic Safety
NEPSI Certificate No.: GYJ091066X
Ex ia II C T4/T5
DIP A21 T_A T80 °C
IP6

Refer to Appendix B of the 3051 Reference Manual (document number 00809-0100-4001) for Special Conditions for Safe Use

N3 China Type n - Non-Sparking
NEPSI Certification No.: GYJ101111X
Ex nA nL II C T5 (-40 °C $\leq T_A \leq$ 70 °C)
IP66

Refer to Appendix B of the 3051 Reference Manual (document number 00809-0100-4001) for Special Conditions for Safe Use

Combinations of Certifications

Stainless steel certification tag is provided when optional approval is specified. Once a device labeled with multiple approval types is installed, it should not be reinstalled using any other approval types. Permanently mark the approval label to distinguish it from unused approval types.

K5 **E5** and **I5** combination

KB **K5** and **C6** combination

KD **K5**, **C6**, **I1**, and **E8** combination

K6 **C6**, **I1**, and **E8** combination

K8 **E8** and **I1** combination

K7 **E7**, **I7**, and **N7** combination

ROSEMOUNT

CE

EC Declaration of Conformity

No: RMD 1017 Rev. M

We,

Rosemount Inc.
8200 Market Boulevard
Chanhassen, MN 55317-6985

declare under our sole responsibility that the product,

Models 3051 Pressure Transmitters

manufactured by,

Rosemount Inc.
12001 Technology Drive
Eden Prairie, MN 55344-3695
USA

and

8200 Market Boulevard
Chanhassen, MN 55317-9687
USA

to which this declaration relates, is in conformity with the provisions of the European Community Directives, including the latest amendments, as shown in the attached schedule.

Assumption of conformity is based on the application of the harmonized standards and, when applicable or required, a European Community notified body certification, as shown in the attached schedule.

(signature)

VICE PRESIDENT - QUALITY
(function name - printed)

TIMOTHY J. LAYER
(name - printed)

17 - DECEMBER - 2009
(date of issue)

File ID: 3051_CE Marking Page 1 of 3 C:\Documents and Settings\tmlayer\Local Settings\Temporary Internet Files\Content.Outlook\GM1VA2CV\3051_RMD1017M.doc

ROSEMOUNT

CE

EC Declaration of Conformity
No: RMD 1017 Rev. M

EMC Directive (2004/108/EC)

All Models 3051 Pressure Transmitters
EN 61326:2006
EN 61326-2-3:2006

PED Directive (97/23/EC)

Models 3051CA4; 3051CG2, 3, 4, 5; 3051CD2, 3, 4, 5 *(also with P9 option)*; 3051HD2, 3, 4, 5; 3051HG2, 3, 4, 5; 3051PD2, 3; and 3051PG2, 3, 4, 5 Pressure Transmitters
QS Certificate of Assessment - EC Certificate No. 59552-2009-CE-HOU-DNV
Module H Conformity Assessment

All other model 3051 Pressure Transmitters
Sound Engineering Practice

Transmitter Attachments: Diaphragm Seal - Process Flange - Manifold
Sound Engineering Practice

Model 3051CFx FlowmeterTransmitters (All 3051CFx models are SEP except as noted in the table below)
QS Certificate of Assessment - CE-41-PED-H1-RMT-001-04-USA
Module __ Conformity Assessment
Evaluation standards:

Model/Randge	PED Category	
	Group 1 Fluid	Group 2 Fluid
3051CFA: 1500# & 2500# All Lines	II	SEP
3051CFA: Sensor Size 2 150# 6"to 24" Line	I	SEP
3051CFA: Sensor Size 2 300# 6"to 24" Line	II	I
3051CFA: Sensor Size 2 600# 6"to 16" Line	II	I
3051CFA: Sensor Size 2 600# 18"to 24" Line	III	II
3051CFA: Sensor Size 3 150# 12"to 44" Line	II	I
3051CFA: Sensor Size 3 150# 46"to 72" Line	III	II
3051CFA: Sensor Size 3 300# 12" to 72" Line	III	II
3051CFA: Sensor Size 3 600# 12"to 48" Line	III	II
3051CFA: Sensor Size 3 600# 60" to 72" Line	IV	III
3051CFP: 150#, 300#, 600# 1-1/2"	I	SEP
3051CFP: 300# & 600# 1-1/2"	II	I
3051CFP: 1-1/2" Threaded & Welded	II	I

ROSEMOUNT

CE

EC Declaration of Conformity
No: RMD 1017 Rev. M

ATEX Directive (94/9/EC)

Model 3051 Pressure Transmitter with 4-20mA/Hart Output

BAS97ATEX1089X Intrinsic Safety and Dust Certificate
Equipment Group II Category 1 GD Ex ia IIC T5 or T4,
T5 (-60°C ≤ Ta ≤ +40°C), T4 (-60°C ≤ Ta ≤ +70°C);
Ex tD A20 IP66 T80°C
Harmonized Standards Used:
EN60079-0:2006; EN60079-11:2007; EN61241-0:2006; EN61241-1:2004

BAS00ATEX3105X Type n and Dust Certificate
Equipment Group II Category 3 GD Ex nA nL IIC T5(-40°C ≤ Ta ≤ +70°C);
Ex tD A22 IP66 T80°C (-20°C ≤ Ta ≤ +40°C)
Harmonized Standards Used:
EN60079-0:2006; EN60079-15:2005; EN61241-0:2006; EN61241-1:2004

Model 3051 Pressure Transmitter with Fieldbus/Profibus Output

BAS98ATEX1355X Intrinsic Safety and Dust Certificate
Equipment Group II Category 1 GD Ex ia IIC T4 (-60°C ≤ Ta ≤ +60°C);
Ex tD A20 IP66 T70°C (-20°C ≤ Ta ≤ +40°C)
Harmonized Standards Used:
EN60079-0:2006; EN60079-11:2007; EN61241-0:2006; EN61241-1:2004

File ID: 3051_CE Marking
Files\Content.Outlook\IM3VA2CV\3051_RMD1017M.doc

Page 1 of 5

C:\Documents and Settings\timlayr\Local Settings\Temporary Internet



ROSEMOUNT

CE

EC Declaration of Conformity
No: RMD 1017 Rev. M

BAS98ATEX3356X Type n and Dust Certificate
Equipment Group II Category 3 GD Ex nL IIC T5(Ta =-40°C to +70°C);
Ex tD A22 IP66 T80°C (-20°C ≤ Ta ≤ +40°C)
Harmonized Standards Used:
EN60079-0:2006; EN60079-15:2005; EN61241-0:2006; EN61241-1:2004

Model 3051 Pressure Transmitter with FISCO Output

BAS98ATEX1355X Intrinsic Safety Certificate
Equipment Group II Category 1 G Ex ia IIC T4 (-60°C ≤ Ta ≤ +60°C);
Harmonized Standards Used:
EN60079-0:2006; EN60079-11:2007

Model 3051 Pressure Transmitters

KEMA00ATEX2013X Flameproof and Dust Certificate
Equipment Group II Category 1/2 G Ex d IIC T6 or T5,
T6(-50°C ≤ Ta ≤ +65°C), T5(-50°C ≤ Ta ≤ +80°C);
Equipment Group IICategory 1/2 D Ex tD A20/A21 IP6x T90°C
Harmonized Standards Used:
EN60079-0:2006; EN60079-1:2007; EN60079-26:2007; EN61241-0:2006;
EN61241-1:2004

File ID: 3051_CE Marking
Files\Content.Outlook\IM1VA2CV\3051_RMD1017M.doc

Page 4 of 5

C:\Documents and Settings\tondaye\Local Settings\Temporary Internet

ROSEMOUNT

CE

EC Declaration of Conformity
No: RMD 1017 Rev. M

PED Notified Body

Model 3051 Pressure Transmitters

Det Norske Veritas (DNV) [Notified Body Number: 0575]
Veritasveien 1, N-1322
Hovik, Norway

3051CFx Series Flowmeter Transmitters

Plant Safety Limited [Notified Body Number: 0041]
Parklands, Wilmslow Road, Didsbury
Manchester M20 2RE
United Kingdom

ATEX Notified Bodies for EC Type Examination Certificate

KEMA (KEMA) [Notified Body Number: 0344]
Utrechtseweg 310, 6812 AR Arnhem
P.O. Box 5185, 6802 ED Arnhem
The Netherlands
Postbank 6794687

Baseefa. [Notified Body Number: 1180]
Rockhead Business Park
Staden Lane
Buxton, Derbyshire
SK17 9RZ United Kingdom

ATEX Notified Body for Quality Assurance

Baseefa. [Notified Body Number: 1180]
Rockhead Business Park
Staden Lane
Buxton, Derbyshire
SK17 9RZ United Kingdom

Reference Manual
00809-0100-4001, Rev JA
November 2012

Rosemount 3051 Pressure Transmitter

with HART® Protocol





HART COMMUNICATION PROTOCOL

ROSEMOUNT

EMERSON. Process Management

Rosemount 3051 Pressure Transmitter

⚠ WARNING

Read this manual before working with the product. For personal and system safety, and for optimum product performance, make sure you thoroughly understand the contents before installing, using, or maintaining this product.

For technical assistance, contacts are listed below:

Customer Central
Technical support, quoting, and order-related questions.

United States - 1-800-999-9307 (7:00 am to 7:00 pm CST)

Asia Pacific- 65 777 8211

Europe/ Middle East/ Africa - 49 (8153) 9390

North American Response Center
Equipment service needs.

1-800-654-7768 (24 hours—includes Canada)

Outside of these areas, contact your local Emerson Process Management representative.

⚠ CAUTION

The products described in this document are NOT designed for nuclear-qualified applications. Using non-nuclear qualified products in applications that require nuclear-qualified hardware or products may cause inaccurate readings.

For information on Rosemount nuclear-qualified products, contact your local Emerson Process Management Sales Representative.

Contents

Section 1: Introduction

1.1 Using this manual 1
1.2 Service support 1
1.3 Models covered 2
1.4 Transmitter overview 3
1.5 Product recycling/ disposal 4

Section 2: Installation

2.1 Overview 5
2.2 Safety messages 5
2.3 General considerations 6
2.4 Mechanical considerations 7
2.5 Draft range considerations 7
2.6 Environmental considerations 8
2.7 HART installation flowchart 9
2.8 Installation procedures 10
2.8.1 Mount the transmitter 10
2.8.2 Impulse piping 14
2.8.3 Process connections 16
2.8.4 Inline process connection 18
2.8.5 Housing rotation 18
2.8.6 LCD display 19
2.8.7 Configure security and alarm 20
2.9 Electrical considerations 22
2.9.1 Conduit installation 22
2.9.2 Wiring 23
2.9.3 Transient protection terminal block 26
2.9.4 Grounding 27
2.10 Hazardous locations certifications 29
2.11 Rosemount 305, 306, and 304 manifolds 29
2.11.1 Rosemount 305 integral manifold installation procedure 31
2.11.2 Rosemount 306 integral manifold installation procedure 31
2.11.3 Rosemount 304 conventional manifold installation procedure 31
2.11.4 Manifold operation 31

2.12 Liquid level measurement 34
2.12.1 Open vessels 35
2.12.2 Closed vessels 35

Section 3: Configuration

3.1 Overview 39
3.2 Safety messages 39
3.3 Commissioning 40
3.3.1 Setting the loop to manual 40
3.3.2 Wiring diagrams 41
3.4 Configuration data review 42
3.5 Field communicator 42
3.5.1 Field communicator user interface 43
3.6 Field communicator menu trees 44
3.7 Traditional fast key sequence 48
3.8 Check output 50
3.8.1 Process variables 51
3.8.2 Sensor temperature 51
3.9 Basic setup 52
3.9.1 Set process variable units 52
3.9.2 Set output (Transfer function) 52
3.9.3 Rerange 53
3.9.4 Damping 57
3.10 LCD display 58
3.10.1 LCD display configuration for 4-20 mA HART only 59
3.10.2 Custom display configuration 4-20 mA HART only 59
3.11 Detailed setup 61
3.11.1 Failure mode alarm and saturation 61
3.11.2 Alarm and saturation levels for burst mode 62
3.11.3 Alarm and saturation values for multidrop mode 62
3.11.4 Alarm level verification 62
3.12 Diagnostics and service 62
3.12.1 Loop test 62
3.13 Advanced functions 64
3.13.1 Saving, recalling, and cloning configuration data 64
3.13.2 Burst mode 67
3.14 Multidrop communication 68

3.15 Changing a transmitter address 69
3.15.1 Communicating with a multidropped transmitter 69
3.15.2 Polling a multidropped transmitter 69

Section 4: Operation and maintenance

4.1 Overview 71
4.2 Safety messages 71
4.2.1 Warnings 72
4.3 Calibration overview 72
4.3.1 Determining calibration frequency 74
4.3.2 Choosing a trim procedure 76
4.4 Analog output trim 77
4.4.1 Digital-to-Analog trim 77
4.4.2 Digital-to-Analog trim using other scale 79
4.4.3 Recall factory trim—analog output 80
4.5 Sensor trim 81
4.5.1 Sensor trim overview 81
4.5.2 Zero trim 82
4.5.3 Sensor trim 83
4.5.4 Recall factory trim—sensor trim 84
4.5.5 Line pressure effect (range 2 and range 3) 84
4.5.6 Compensating for line pressure 85

Section 5: Troubleshooting

5.1 Overview 89
5.2 Safety messages 89
5.2.1 Warnings () 90
5.3 Diagnostic messages 92
5.4 Disassembly procedures 97
5.4.1 Remove from service 98
5.4.2 Remove terminal block 99
5.4.3 Remove the electronics board 99
5.4.4 Remove the sensor module from the electronics housing 99
5.5 Reassembly procedures 100
5.5.1 Attach the electronics board 100
5.5.2 Install the terminal block 101
5.5.3 Reassemble the 3051C process flange 101

5.5.4 Install the drain/vent valve 102

Appendix A: Specifications and reference data

A.1 Performance specifications 103
A.1.1 Conformance to specification (±3s (Sigma)) 103
A.1.2 Reference accuracy(1) 104
A.1.3 Total performance 104
A.1.4 Long term stability 105
A.1.5 Dynamic performance 105
A.1.6 Line pressure effect per 1000 psi (6,9 MPa)(1) 105
A.1.7 Ambient temperature effect per 50 °F (28 °C) 106
A.1.8 Mounting position effects 106
A.1.9 Vibration effect 106
A.1.10 Power supply effect 107
A.1.11 Electromagnetic compatibility (EMC) 107
A.1.12 Transient protection (option code T1) 107
A.2 Functional specifications 108
A.2.1 Range and sensor limits 108
A.2.2 Zero and Span Adjustment Requirements (HART and Low Power) 109
A.2.3 Service 110
A.2.4 4–20 mA (Output Code A) 110
A.2.5 Foundation fieldbus (output code F) and Profibus (output code W) . . . 110
A.2.6 Foundation fieldbus function block execution times 111
A.2.7 Foundation fieldbus Parameters 111
A.2.8 Standard Function Blocks 111
A.2.9 Backup Link Active Scheduler (LAS) 112
A.2.10 Advanced control function block suite (Option Code A01) 112
A.2.11 Foundation fieldbus Diagnostics Suite (Option Code D01) 112
A.2.12 Low Power (output code M) 112
A.2.13 Static Pressure Limit 114
A.2.14 Burst Pressure Limits 114
A.2.15 Failure Mode Alarm 114
A.2.16 Temperature Limits 115
A.3 Physical specifications 116
A.3.1 Electrical Connections 116
A.3.2 Process Connections 116
A.3.3 Process-Wetted Parts 117

A.3.4 Rosemount 3051L Process Wetted Parts 118
A.3.5 Non-Wetted Parts 118
A.3.6 Shipping Weights 119
A.4 Dimensional Drawings 120
A.5 Ordering Information 131
A.5.1 Options (Include with selected model number) 133
A.5.2 Options (Include with selected model number) 140
A.5.3 Options (Include with selected model number) 147
A.5.4 Options (Include with selected model number) 152
A.6 Options 156
A.7 Spare parts 164

Appendix B: Product certifications

B.1 Overview 175
B.2 Safety messages 175
B.2.1 Warnings 176
B.3 Approved manufacturing locations 176
B.4 European directive information 176
B.4.1 Ordinary location certification for factory mutual 176
B.5 Hazardous locations certifications 177
B.5.1 North american certifications 177
B.6 Approval drawings 184
B.6.1 Factory mutual 03031-1019 184
B.6.2 Canadian standards association (CSA) 03031-1024 197

Section 1 Introduction

1.1 Using this manual

The sections in this manual provide information on installing, operating, and maintaining the Rosemount 3051. The sections are organized as follows:

Section 2: Installation contains mechanical and electrical installation instructions, and field upgrade options.

Section 3: Configuration provides instruction on commissioning and operating Rosemount 3051 transmitters. Information on software functions, configuration parameters, and online variables is also included.

Section 4: Operation and maintenance contains operation and maintenance techniques.

Section 5: Troubleshooting provides troubleshooting techniques for the most common operating problems.

Appendix A: Specifications and reference data supplies reference and specification data, as well as ordering information.

Appendix B: Product certifications contains intrinsic safety approval information, European ATEX directive information, and approval drawings.

1.2 Service support

To expedite the return process outside of the United States, contact the nearest Emerson Process Management representative.

Within the United States, call the Emerson Process Management Instrument and Valve Response Center using the 1-800-654-RSMT (7768) toll-free number. This center, available 24 hours a day, will assist you with any needed information or materials.

The center will ask for product model and serial numbers, and will provide a Return Material Authorization (RMA) number. The center will also ask for the process material to which the product was last exposed.

⚠ CAUTION

Individuals who handle products exposed to a hazardous substance can avoid injury if they are informed of and understand the hazard. The product being returned will require a copy of the required Material Safety Data Sheet (MSDS) for each substance must be included with the returned goods.

Emerson Process Management Instrument and Valve Response Center representatives will explain the additional information and procedures necessary to return goods exposed to hazardous substances.

1.3 Models covered

The following Rosemount 3051 Pressure Transmitters are covered by this manual:

Rosemount 3051C coplanar pressure transmitter

Rosemount 3051CD Differential Pressure Transmitter

Measures differential pressure up to 2000 psi (137,9 bar).

Rosemount 3051CG Gage Pressure Transmitter

Measures gage pressure up to 2000 psi (137,9 bar).

Rosemount 3051CA Absolute Pressure Transmitter

Measures absolute pressure up to 4000 psia (275,8 bar).

Rosemount 3051T in-line pressure transmitter

Rosemount 3051T Gage and Absolute Pressure Transmitter

Measures gage pressure up to 10000 psi (689,5 bar).

Rosemount 3051L liquid level transmitter

Provides precise level and specific gravity measurements up to 300 psi (20,7 bar) for a wide variety of tank configurations.

Rosemount 3051H high process temperature pressure transmitter

Provides high process temperature capability to 375 °F (191 °C) for measuring differential or gage pressure without use of remote diaphragm seals or capillaries.

Note
For Rosemount 3051 with FOUNDATION™ fieldbus, see Rosemount Product Manual 00809-0100-4774. For Rosemount 3051 with Profibus PA, see Rosemount Product Manual 00809-0100-4797.

1.4 Transmitter overview

The Rosemount 3051C Coplanar™ design is offered for Differential Pressure (DP), Gage Pressure (GP) and Absolute Pressure (AP) measurements. The Rosemount 3051C utilizes Emerson Process Management capacitance sensor technology for DP and GP measurements. Piezoresistive sensor technology is utilized in the Rosemount 3051T and 3051CA measurements.

The major components of the Rosemount 3051 are the sensor module and the electronics housing. The sensor module contains the oil filled sensor system (isolating diaphragms, oil fill system, and sensor) and the sensor electronics. The sensor electronics are installed within the sensor module and include a temperature sensor (RTD), a memory module, and the capacitance to digital signal converter (C/D converter). The electrical signals from the sensor module are transmitted to the output electronics in the electronics housing. The electronics housing contains the output electronics board, the local zero and span buttons, and the terminal block. The basic block diagram of the Rosemount 3051CD is illustrated in Figure 1-1.

For the Rosemount 3051C design pressure is applied to the isolating diaphragms, the oil deflects the center diaphragm, which then changes the capacitance. This capacitance signal is then changed to a digital signal in the C/D converter. The microprocessor then takes the signals from the RTD and C/D converter calculates the correct output of the transmitter. This signal is then sent to the D/A converter, which converts the signal back to an analog signal and superimposes the HART signal on the 4-20 mA output.

Figure 1-1. Block diagram of operation

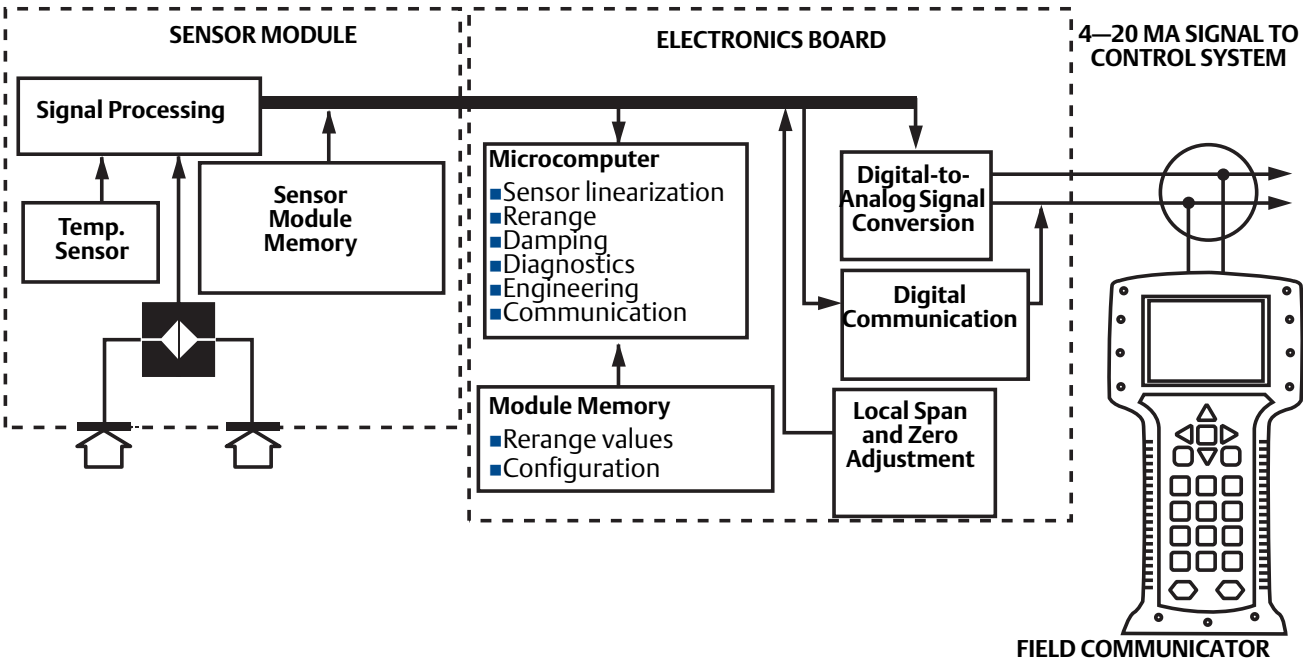

1.5 Product recycling/ disposal

Recycling of equipment and packaging should be taken into consideration and disposed of in accordance with local and national legislation/regulations.

Section 2 Installation

Overview . . . . . **page 5**
Safety messages . . . . . **page 5**
General considerations . . . . . **page 6**
Mechanical considerations . . . . . **page 7**
Draft range considerations . . . . . **page 7**
Environmental considerations . . . . . **page 8**
HART installation flowchart . . . . . **page 9**
Installation procedures . . . . . **page 10**
Electrical considerations . . . . . **page 22**
Hazardous locations certifications . . . . . **page 29**
Rosemount 305, 306, and 304 manifolds . . . . . **page 29**
Liquid level measurement . . . . . **page 34**

2.1 Overview

The information in this section covers installation considerations for the Rosemount 3051 with HART protocols. A Quick Installation Guide for HART protocol (document number 00825-0100-4001) is shipped with every transmitter to describe basic pipe-fitting and wiring procedures for initial installation. Dimensional drawings for each 3051 variation and mounting configuration are included on page 13.

2.2 Safety messages

Procedures and instructions in this section may require special precautions to ensure the safety of the personnel performing the operation. Information that raises potential safety issues is indicated by a warning symbol (⚠). Refer to the following safety messages before performing an operation preceded by this symbol.

⚠ WARNING

Explosions could result in death or serious injury:

Installation of this transmitter in an explosive environment must be in accordance with the appropriate local, national, and international standards, codes, and practices. Please review the approvals section of the 3051 reference manual for any restrictions associated with a safe installation.

- Before connecting a Field Communicator in an explosive atmosphere, ensure the instruments in the loop are installed in accordance with intrinsically safe or non-incendive field wiring practices.
- In an Explosion-Proof/Flameproof installation, do not remove the transmitter covers when power is applied to the unit.

Process leaks may cause harm or result in death.

- Install and tighten process connectors before applying pressure.

Electrical shock can result in death or serious injury.

- Avoid contact with the leads and terminals. High voltage that may be present on leads can cause electrical shock.

⚠ WARNING

Electrical shock can result in death or serious injury.

- Avoid contact with the leads and terminals.

Process leaks could result in death or serious injury.

- Install and tighten all four flange bolts before applying pressure.
- Do not attempt to loosen or remove flange bolts while the transmitter is in service.

Replacement equipment or spare parts not approved by Emerson Process Management for use as spare parts could reduce the pressure retaining capabilities of the transmitter and may render the instrument dangerous.

- Use only bolts supplied or sold by Emerson Process Management as spare parts.
- Refer to page 164 for a complete list of spare parts.

Improper assembly of manifolds to traditional flange can damage sensor module.

- For safe assembly of manifold to traditional flange, bolts must break back plane of flange web (i.e., bolt hole) but must not contact sensor module housing.

2.3 General considerations

Measurement accuracy depends upon proper installation of the transmitter and impulse piping. Mount the transmitter close to the process and use a minimum of piping to achieve best accuracy. Keep in mind the need for easy access, personnel safety, practical field calibration, and a suitable transmitter environment. Install the transmitter to minimize vibration, shock, and temperature fluctuation.

Important
Install the enclosed pipe plug (found in the box) in unused conduit opening with a minimum of five threads engaged to comply with explosion-proof requirements.

For material compatibility considerations, see document number 00816-0100-3045 on www.emersonprocess.com/rosemount.

2.4 Mechanical considerations

Note
For steam service or for applications with process temperatures greater than the limits of the transmitter, do not blow down impulse piping through the transmitter. Flush lines with the blocking valves closed and refill lines with water before resuming measurement.

Note
When the transmitter is mounted on its side, position the Coplanar flange to ensure proper venting or draining. Mount the flange as shown in Figure 2-8 on page 16, keeping drain/vent connections on the bottom for gas service and on the top for liquid service.

2.5 Draft range considerations

Installation

For the Rosemount 3051CD0 draft range pressure transmitter, it is best to mount the transmitter with the isolators parallel to the ground. Installing the transmitter in this way reduces oil head effect and provides for optimal temperature performance.

Be sure the transmitter is securely mounted. Tilting of the transmitter may cause a zero shift in the transmitter output.

Reducing process noise

There are two recommended methods of reducing process noise: output damping and, in gage applications, reference side filtering.

Output damping

The output damping for the Rosemount 3051CD0 is factory set to 3.2 seconds as a default. If the transmitter output is still noisy, increase the damping time. If faster response is needed, decrease the damping time. Damping adjustment information is available on page 57.

Reference side filtering

In gage applications it is important to minimize fluctuations in atmospheric pressure to which the low side isolator is exposed.

One method of reducing fluctuations in atmospheric pressure is to attach a length of tubing to the reference side of the transmitter to act as a pressure buffer.

Another method is to plumb the reference side to a chamber that has a small vent to atmosphere. If multiple draft transmitters are being used in an application, the reference side of each device can be plumbed to a chamber to achieve a common gage reference.

2.6 Environmental considerations

Best practice is to mount the transmitter in an environment that has minimal ambient temperature change. The transmitter electronics temperature operating limits are –40 to 185 °F (–40 to 85 °C). Refer to Appendix A: Specifications and reference data that lists the sensing element operating limits. Mount the transmitter so that it is not susceptible to vibration and mechanical shock and does not have external contact with corrosive materials.

2.7 HART installation flowchart

Figure 2-1. HART installation flowchart

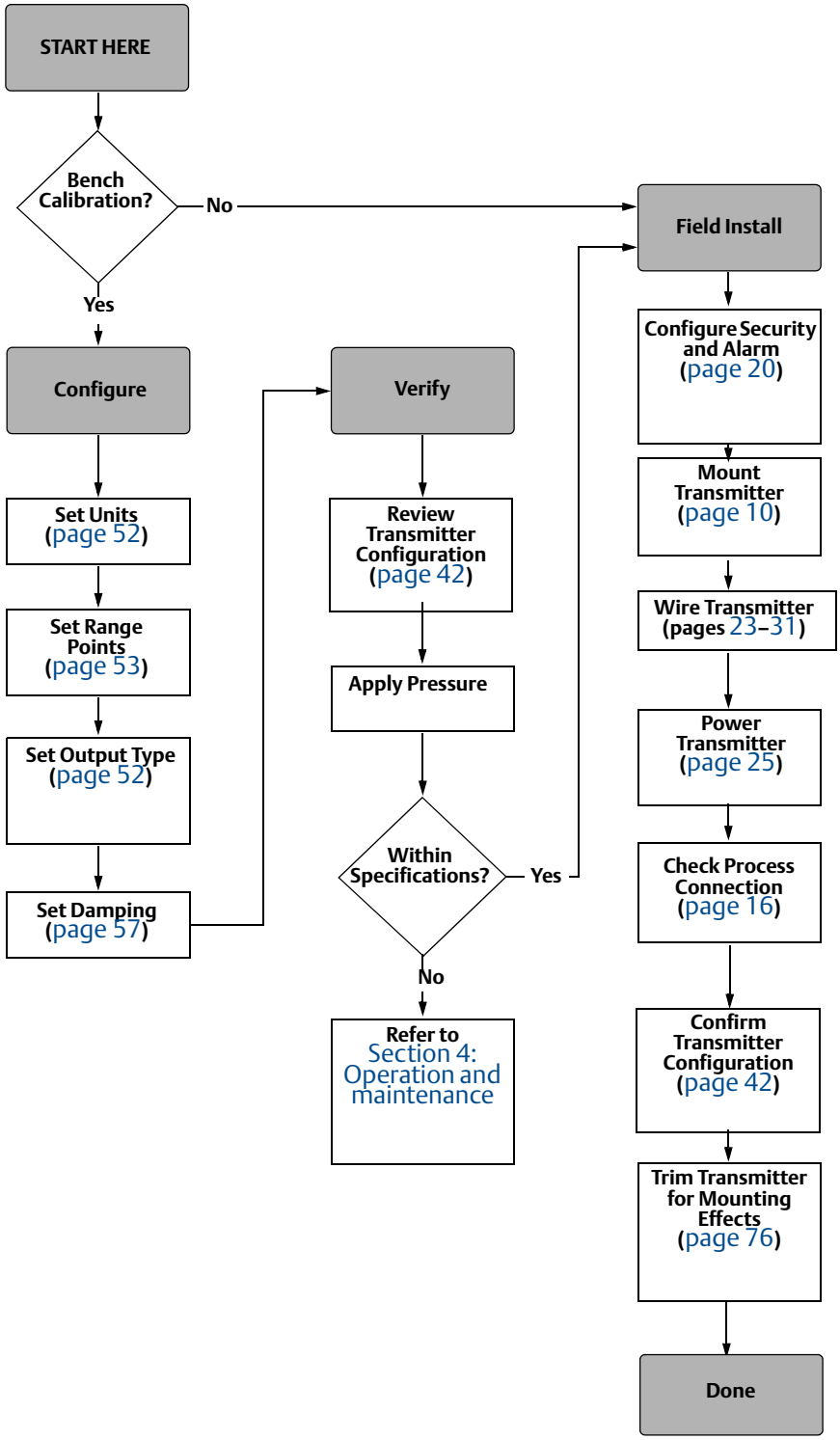

2.8 Installation procedures

2.8.1 Mount the transmitter

For dimensional drawing information refer to Appendix A: Specifications and reference data on page 120.

Process flange orientation

Mount the process flanges with sufficient clearance for process connections. For safety reasons, place the drain/vent valves so the process fluid is directed away from possible human contact when the vents are used. In addition, consider the need for a testing or calibration input.

Note
Most transmitters are calibrated in the horizontal position. Mounting the transmitter in any other position will shift the zero point to the equivalent amount of liquid head pressure caused by the varied mounting position. To reset zero point, refer to "Sensor Trim" on page 10.

Housing rotation

See "Housing rotation" on page 18.

Terminal side of electronics housing

Mount the transmitter so the terminal side is accessible. Clearance of 0.75 in. (19 mm) is required for cover removal. Use a conduit plug in the unused conduit opening.

Circuit side of electronics housing

Provide 0.75 in. (19 mm) of clearance for units with out an LCD display. Three inches of clearance is required for cover removal if a meter is installed.

Cover installation

Always ensure a proper seal by installing the electronics housing cover(s) so that metal contacts metal. Use Rosemount O-rings.

Conduit entry threads

For NEMA 4X, IP66, and IP68 requirements, use thread seal (PTFE) tape or paste on male threads to provide a watertight seal.

Mounting brackets

Rosemount 3051 Transmitters may be panel-mounted or pipe-mounted through an optional mounting bracket. Refer to Table 2-1 for the complete offering and see Figure 2-2 through Figure 2-5 on pages 11 and 12 for dimensions and mounting configurations.

Table 2-1. Mounting brackets

3051 brackets										
	Process connections			Mounting			Materials			
Option code	Coplanar	In-line	Traditional	Pipe mount	Panel mount	Flat panel mount	CS bracket	SST bracket	CS bolts	SST bolts
B4	X	X		X	X	X		X		X
B1			X	X			X		X	
B2			X		X		X		X	
B3			X			X	X		X	
B7			X	X			X			X
B8			X		X		X			X
B9			X			X	X			X
BA			X	X				X		X
BC			X			X		X		X

Figure 2-2. Mounting bracket option code B4

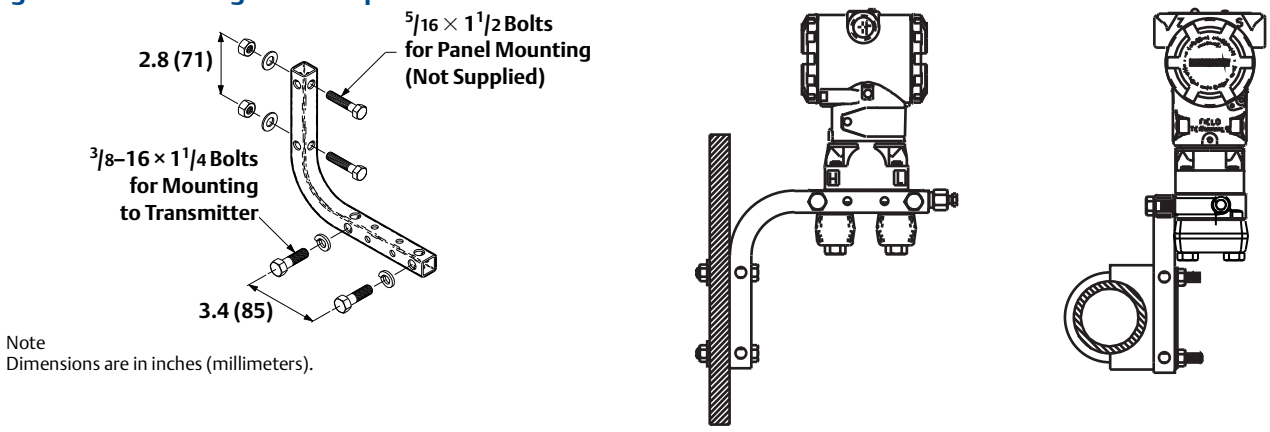

Note
Dimensions are in inches (millimeters).

Flange bolts

The 3051 can be shipped with a Coplanar flange or a Traditional flange installed with four 1.75-inch flange bolts. Mounting bolts and bolting configurations for the Coplanar and Traditional flanges can be found on page 14. Stainless steel bolts supplied by Emerson Process Management are coated with a lubricant to ease installation. Carbon steel bolts do not require lubrication. No additional lubricant should be applied when installing either type of bolt. Bolts supplied by Emerson Process Management are identified by their head markings:

Figure 2-3. Mounti ng bracket option codes B1, B7, and BA

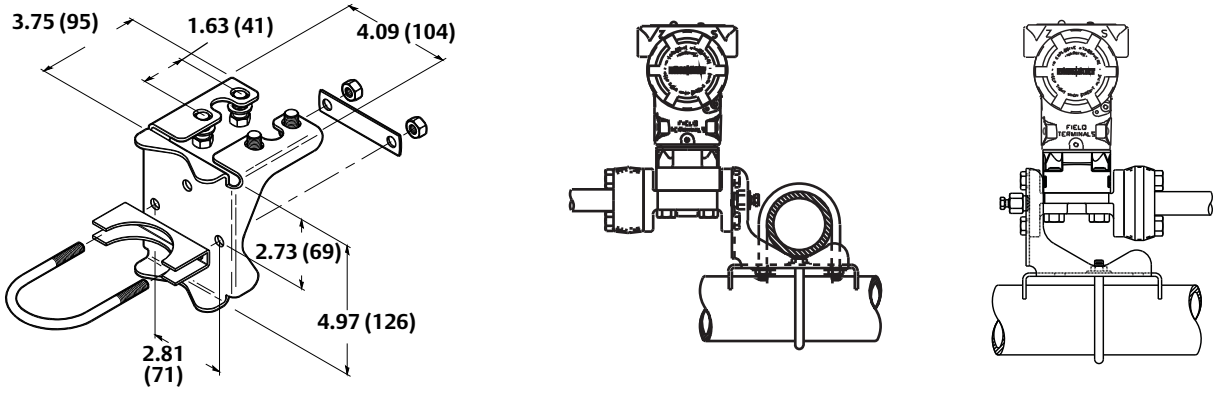

Figure 2-4. Panel mounting bracket option codes B2 and B8

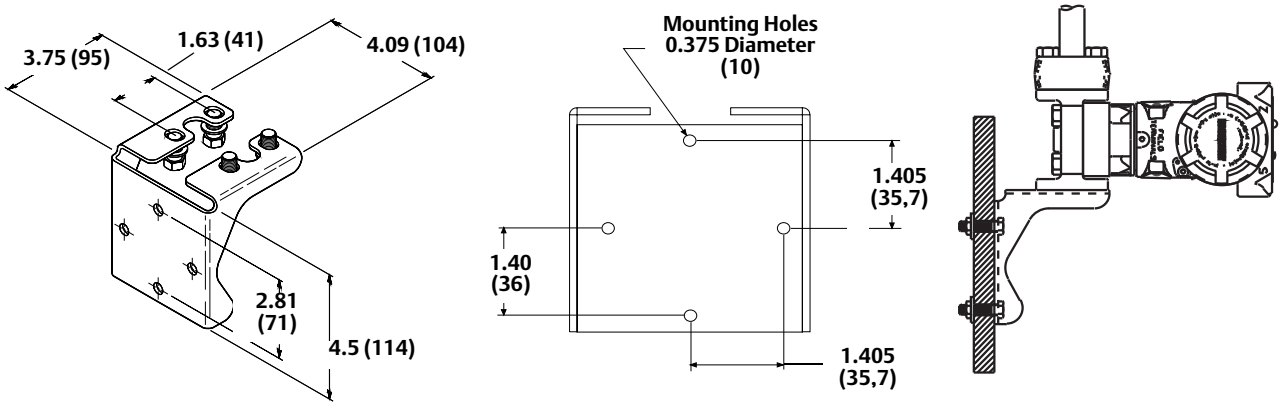

Figure 2-5. Flat mounting bracket option codes B3 and BC

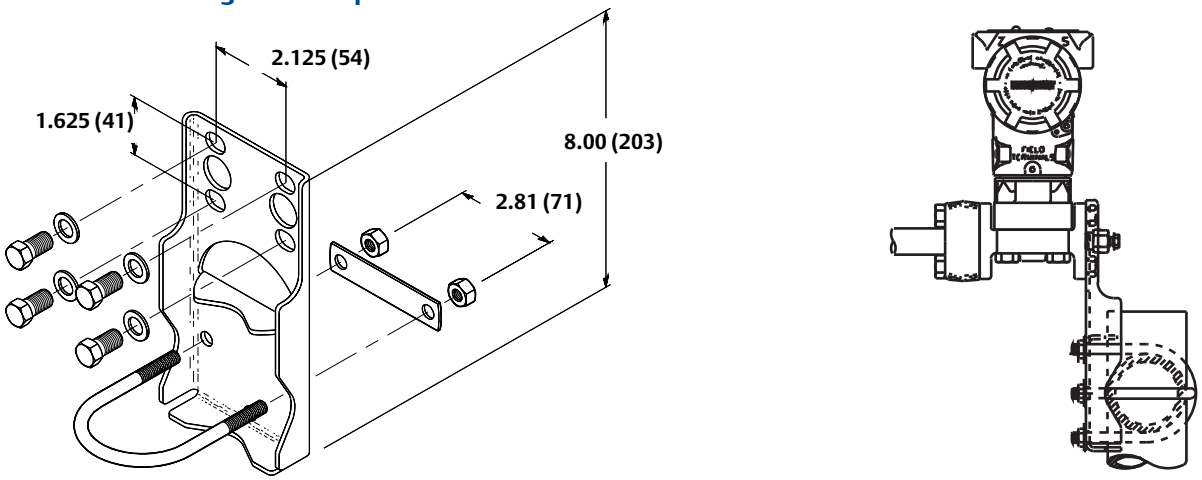

Note
Dimensions are in inches (millimeters).

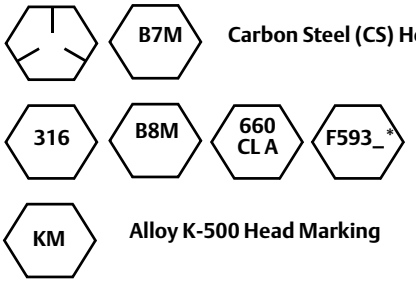

Carbon Steel (CS) Head Markings

Stainless Steel (SST) Head Markings

* The last digit in the F593_ head marking may be any letter between A and M.

Alloy K-500 Head Marking

Bolt installation

⚠ Only use bolts supplied with the Rosemount 3051 or sold by Emerson Process Management as spare parts for the Rosemount 3051 transmitter. Use the following bolt installation procedure:

1. Finger-tighten the bolts.
2. Torque the bolts to the initial torque value using a crossing pattern (see Table 2-2 for torque values).
3. Torque the bolts to the final torque value using the same crossing pattern.

Table 2-2. Bolt installation torque values

Bolt material	Initial torque value	Final torque value
CS-ASTM-A445 Standard	300 in.-lb (34 N-m)	650 in.-lb (73 N-m)
316 SST—Option L4	150 in.-lb (17 N-m)	300 in.-lb (34 N-m)
ASTM-A-19 B7M—Option L5	300 in.-lb (34 N-m)	650 in.-lb (73 N-m)
Alloy 400—Option L6	300 in.-lb (34 N-m)	650 in.-lb (73 N-m)

⚠ See "Safety messages" on page 5 for complete warning

Figure 2-4. Traditional flange bolt configurations

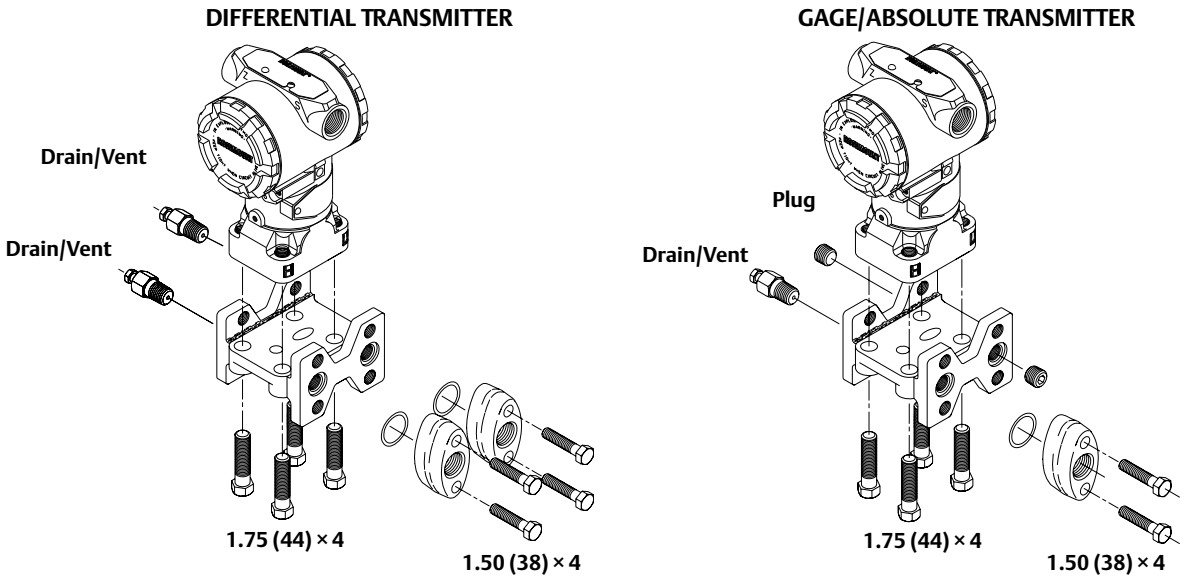

Note
Dimensions are in inches (millimeters).

Figure 2-7. Mounting bolts and bolt configurations for coplanar flange

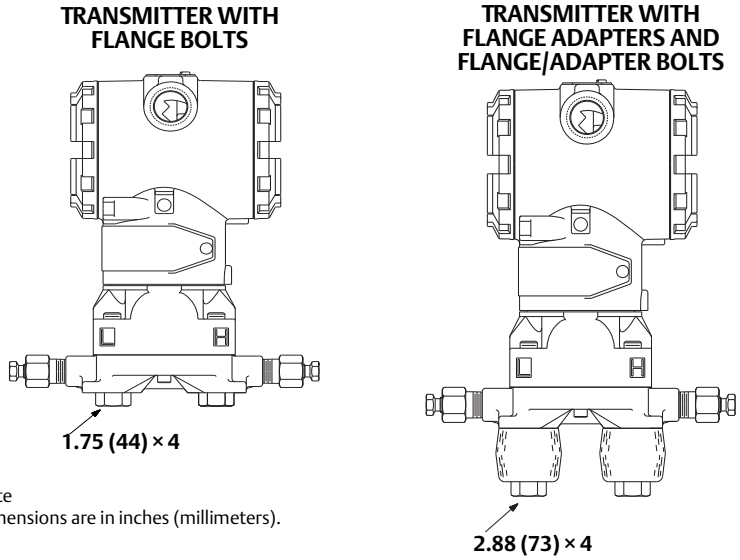

Note
Dimensions are in inches (millimeters).

Description	Qty	Size in. (mm)
Differential Pressure		
Flange Bolts	4	1.75 (44)
Flange/Adapter Bolts	4	2.88 (73)
Gage/Absolute Pressure (1)		
Flange Bolts	4	1.75 (44)
Flange/Adapter Bolts	2	2.88 (73)

(1) Rosemount 3051T transmitters are direct mount and do not require bolts for process connection.

2.8.2 Impulse piping

The piping between the process and the transmitter must accurately transfer the pressure to obtain accurate measurements. There are five possible sources of error: pressure transfer, leaks,

friction loss (particularly if purging is used), trapped gas in a liquid line, liquid in a gas line, and density variations between the legs.

The best location for the transmitter in relation to the process pipe is dependent on the process. Use the following guidelines to determine transmitter location and placement of impulse piping:

- Keep impulse piping as short as possible.
- For liquid service, slope the impulse piping at least 1 in./foot (8 cm/m) upward from the transmitter toward the process connection.
- For gas service, slope the impulse piping at least 1 in./foot (8 cm/m) downward from the transmitter toward the process connection.
- Avoid high points in liquid lines and low points in gas lines.
- Make sure both impulse legs are the same temperature.
- Use impulse piping large enough to avoid friction effects and blockage.
- Vent all gas from liquid piping legs.
- When using a sealing fluid, fill both piping legs to the same level.
- When purging, make the purge connection close to the process taps and purge through equal lengths of the same size pipe. Avoid purging through the transmitter.
- Keep corrosive or hot (above 250 °F [121 °C]) process material out of direct contact with the sensor module and flanges.
- Prevent sediment deposits in the impulse piping.
- Maintain equal leg of head pressure on both legs of the impulse piping.
- Avoid conditions that might allow process fluid to freeze within the process flange.

Mounting requirements

Impulse piping configurations depend on specific measurement conditions. Refer to Figure 2-8 for examples of the following mounting configurations:

Liquid flow measurement

- Place taps to the side of the line to prevent sediment deposits on the transmitter's process isolators.
- Mount the transmitter beside or below the taps so gases can vent into the process line.
- Mount drain/vent valve upward to allow gases to vent.

Gas flow measurement

- Place taps in the top or side of the line.
- Mount the transmitter beside or above the taps so liquid will drain into the process line.

Steam flow measurement

- Place taps to the side of the line.
- Mount the transmitter below the taps to ensure that the impulse piping will stay filled with condensate.
- In steam service above 250 °F (121 °C), fill impulse lines with water to prevent steam from contacting the transmitter directly and to ensure accurate measurement start-up.

Note
For steam or other elevated temperature services, it is important that temperatures at the process connection do not exceed the transmitter's process temperature limits.

Figure 2-8. Installation examples

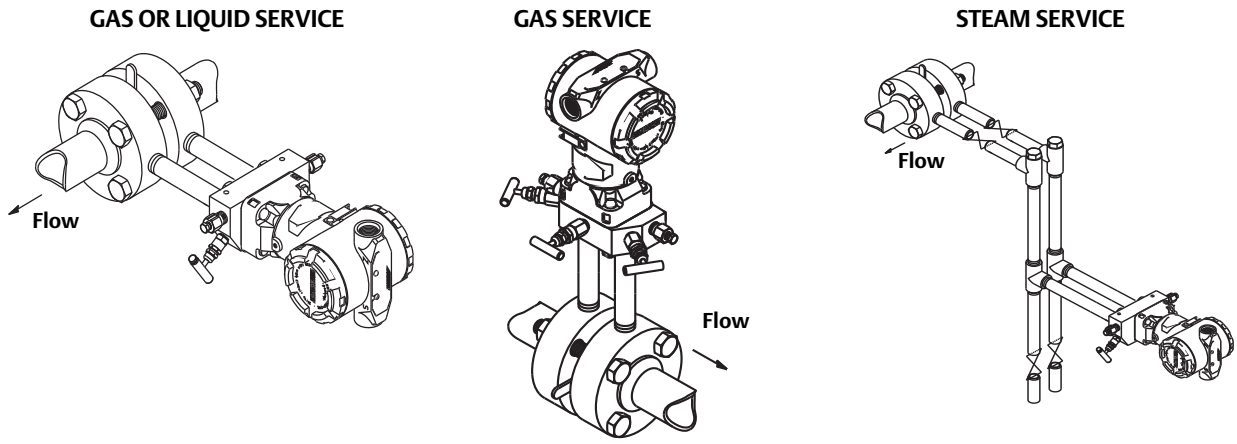

2.8.3 Process connections

Coplanar or traditional process connection

⚠ Install and tighten all four flange bolts before applying pressure, or process leakage will result. When properly installed, the flange bolts will protrude through the top of the sensor module housing. Do not attempt to loosen or remove the flange bolts while the transmitter is in service.

Flange adaptors:

⚠ Rosemount 3051DP and GP process connections on the transmitter flanges are $^1/_4$–18 NPT. Flange adapters are available with standard $^1/_2$–14 NPT Class 2 connections. The flange adapters allow users to disconnect from the process by removing the flange adapter bolts. Use plant-approved lubricant or sealant when making the process connections. Refer to Dimensional Drawings on page 120 for the distance between pressure connections. This distance may be varied $\pm^1/_8$ in. (3.2 mm) by rotating one or both of the flange adapters.

To install adapters to a Coplanar flange, perform the following procedure:

1. Remove the flange bolts.
2. Leaving the flange in place, move the adapters into position with the o-ring installed.
3. Clamp the adapters and the Coplanar flange to the transmitter sensor module using the larger of the bolts supplied.
4. Tighten the bolts. Refer to "Flange bolts" on page 11 for torque specifications.

Whenever you remove flanges or adapters, visually inspect the PTFE o-rings. Replace with o-ring designed for Rosemount transmitter if there are any signs of damage, such as nicks or cuts. Undamaged o-rings may be reused. If you replace the o-rings, retorque the flange bolts after installation to compensate for cold flow. Refer to the process sensor body reassembly procedure in Section 5: Troubleshooting.

O-rings:

The two styles of Rosemount flange adapters (Rosemount 1151 and Rosemount 3051S/3051/2051/3095) each require a unique O-ring (see Figure 2-9). Use only the O-ring designed for the corresponding flange adaptor.

Figure 2-9. O-Rings.

⚠ WARNING

Failure to install proper flange adapter O-rings may cause process leaks, which can result in death or serious injury. The two flange adapters are distinguished by unique O-ring grooves. Only use the O-ring that is designed for its specific flange adapter, as shown below.

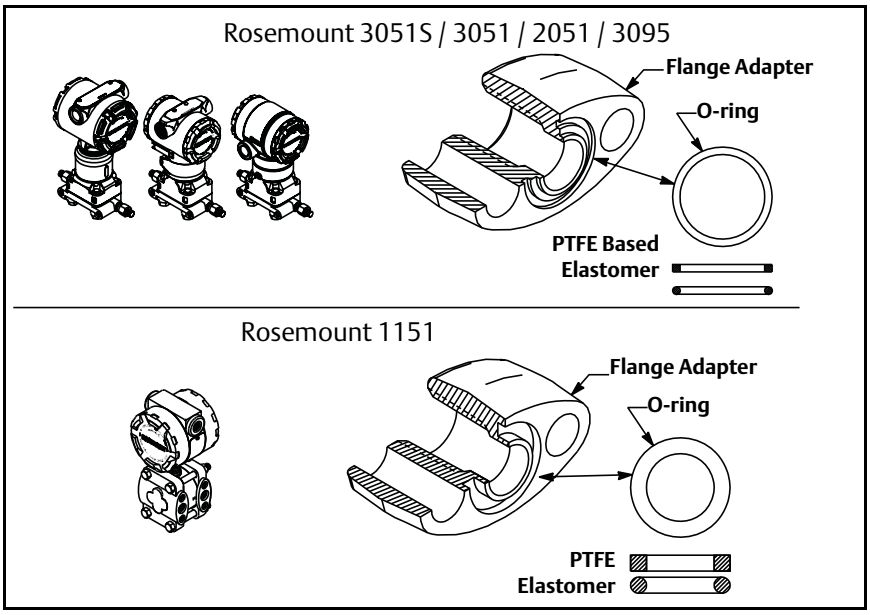

⚠ When compressed, PTFE O-rings tend to “cold flow,” which aids in their sealing capabilities.

Note
PTFE O-rings should be replaced if the flange adapter is removed.

2.8.4 Inline process connection

Inline gage transmitter orientation

The low side pressure port on the inline gage transmitter is located in the neck of the transmitter, behind the housing. The vent path is 360 degrees around the transmitter between the housing and sensor (See Figure 2-10).

Keep the vent path free of any obstruction, such as paint, dust, and lubrication by mounting the transmitter so that the process can drain away.

Figure 2-10. Inline gage low side pressure port

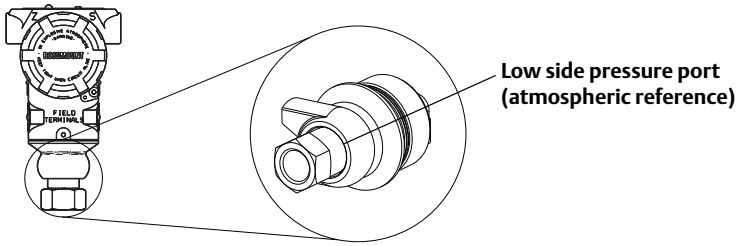

⚠ WARNING

Do not apply torque directly to the sensor module. Rotation between the sensor module and the process connection can damage the electronics. To avoid damage, apply torque only to the hex-shaped process connection.

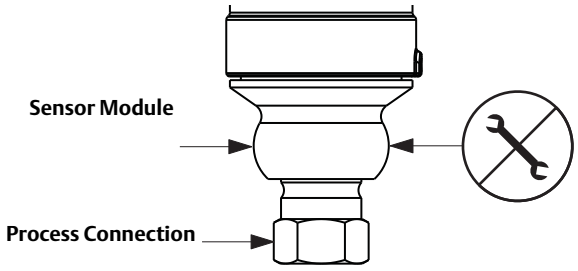

2.8.5 Housing rotation

The electronics housing can be rotated up to 180 degrees in either direction to improve field access, or to better view the optional LCD display. To rotate the housing, perform the following procedure:

1. Loosen the housing rotation set screw using a $\frac{5}{64}$ -in. hex wrench.
2. Turn the housing left or right up to 180° from its original position. Over rotating will damage the transmitter.
3. Retighten the housing rotation set screw.

Figure 2-11. Housing rotation

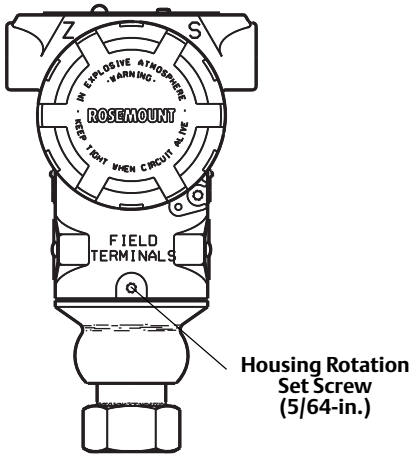

2.8.6 LCD display

Transmitters ordered with the LCD option are shipped with the display installed. Installing the display on an existing 3051 transmitter requires a small instrument screwdriver.

Figure 2-12. LCD display

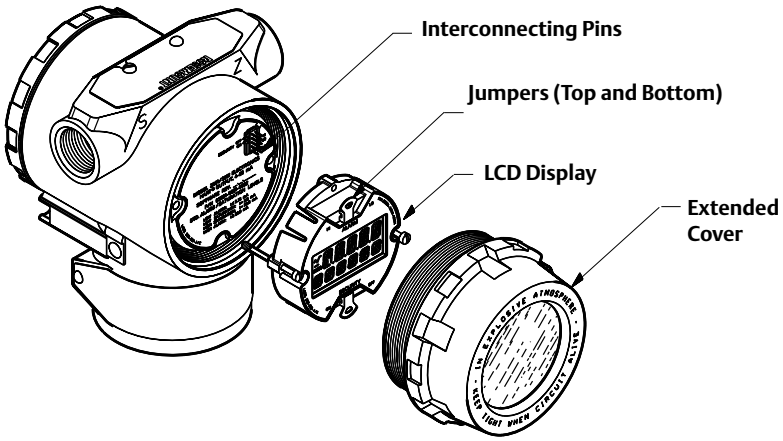

2.8.7 Configure security and alarm

Security (write protect)

There are three security methods with the Rosemount 3051 transmitter:

1. Security Jumper: prevents all writes to transmitter configuration.
2. Local Keys (Local Zero and Span) Software Lock Out: prevents changes to transmitter range points via local zero and span adjustment keys. With local keys security enabled, changes to configuration are possible via HART.
3. Physical Removal of Local Keys (Local Zero and Span) Magnetic Buttons: removes ability to use local keys to make transmitter range point adjustments. With local keys security enabled, changes to configuration are possible via HART.

You can prevent changes to the transmitter configuration data with the write protection jumper. Security is controlled by the security (write protect) jumper located on the electronics board or LCD display. Position the jumper on the transmitter circuit board in the “ON” position to prevent accidental or deliberate change of configuration data.

If the transmitter write protection jumper is in the “ON” position, the transmitter will not accept any “writes” to its memory. Configuration changes, such as digital trim and reranging, cannot take place when the transmitter security is on.

Note
If the security jumper is not installed, the transmitter will continue to operate in the security OFF configuration.

Configuring transmitter security and alarm jumper procedure

To reposition the jumpers, follow the procedure described below.

1. Do not remove the transmitter covers in explosive atmospheres when the circuit is live. If the transmitter is live, set the loop to manual and remove power.

⚠

2. Remove the housing cover opposite the field terminal side. Do not remove the transmitter covers in explosive atmospheres when the circuit is live.
3. Reposition the jumpers as desired.
   - Figure 2-13 shows the jumper positions for the 4-20 mA HART Transmitter.
   - Figure 2-14 shows the jumper positions for the 1-5 HART Vdc Low Power Transmitter.

⚠

4. Reattach the transmitter cover. Always ensure a proper seal by installing the electronics housing covers so that metal contacts metal to meet explosion-proof requirements.

Figure 2-13. Electronics board

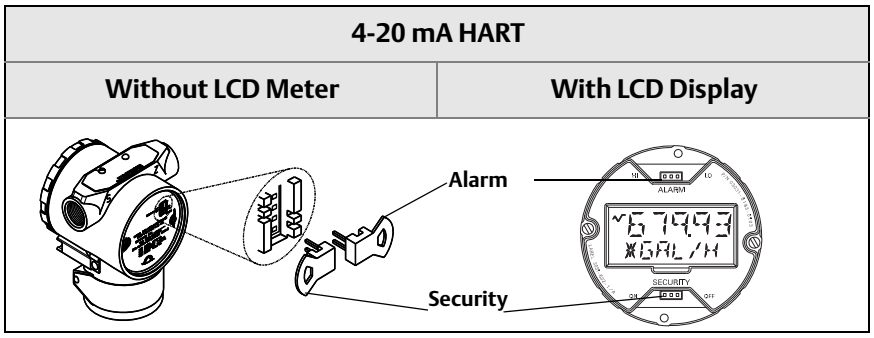

Figure 2-14. Low power transmitter electronics boards

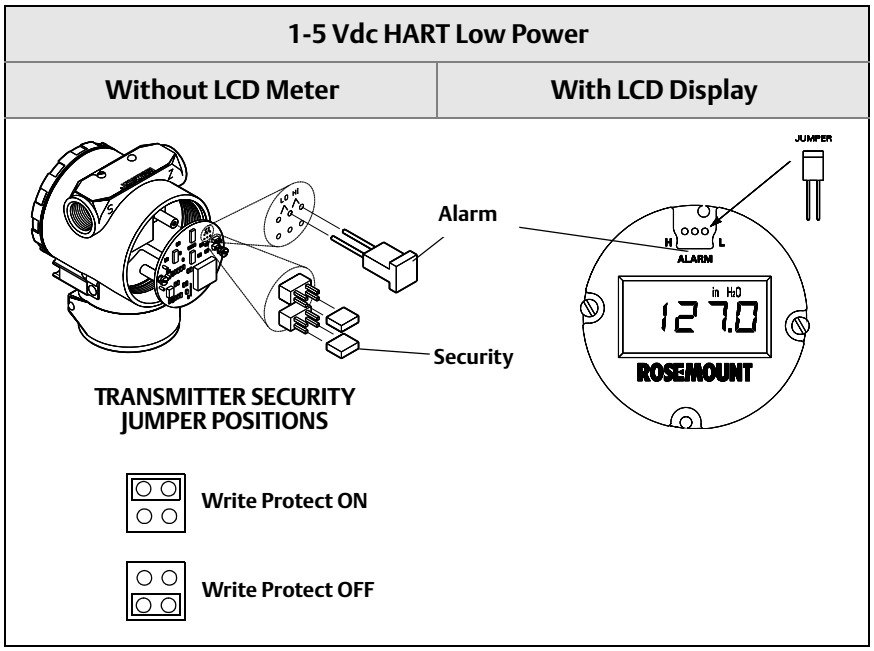

Note
Security jumper not installed = Not Write Protected
Alarm jumper not installed = High Alarm

2.9 Electrical considerations

Note
Make sure all electrical installation is in accordance with national and local code requirements.

2.9.1 Conduit installation

⚠ CAUTION

If all connections are not sealed, excess moisture accumulation can damage the transmitter. Make sure to mount the transmitter with the electrical housing positioned downward for drainage. To avoid moisture accumulation in the housing, install wiring with a drip loop, and ensure the bottom of the drip loop is mounted lower than the conduit connections or the transmitter housing.

Recommended conduit connections are shown in Figure 2-15.

Figure 2-15. Conduit installation diagrams.

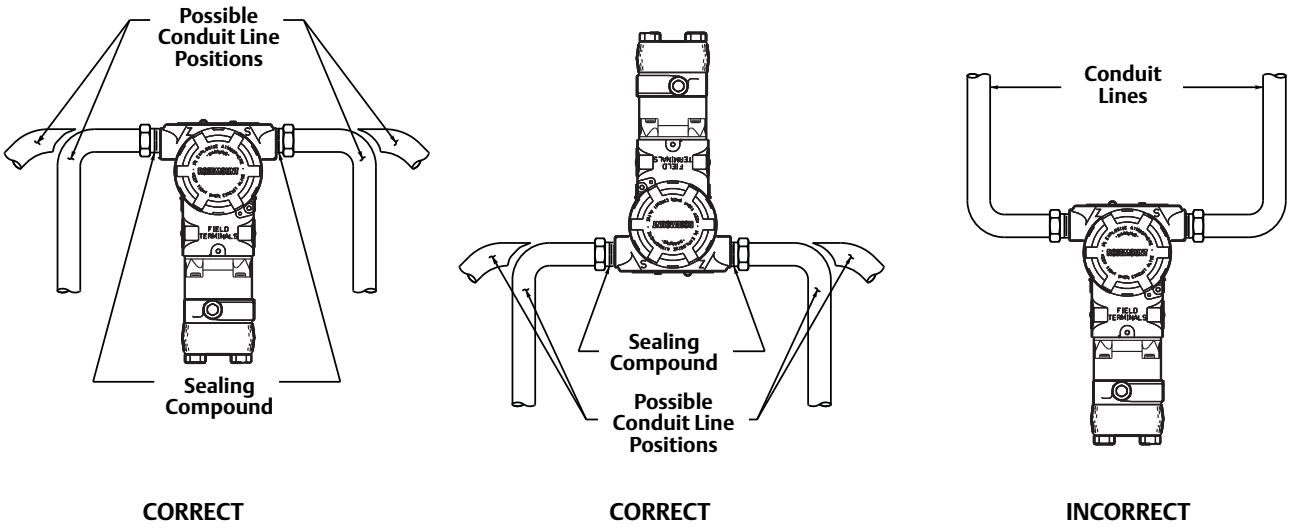

2.9.2 Wiring

⚠ CAUTION

Do not connect the power signal wiring to the test terminals. Voltage may burn out the reverse-polarity protection diode in the test connection.

Note
Use shielded twisted pairs to yield best results. To ensure proper communication, use 24 AWG or larger wire, and do not exceed 5000 feet (1500 meters).

Figure 2-16. 4-20 mA HART wiring

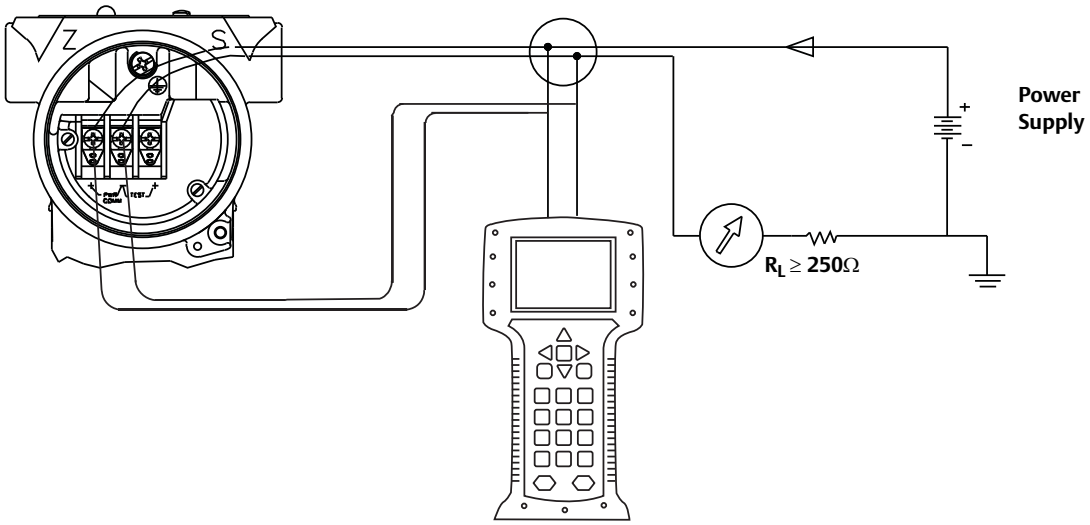

Figure 2-17. 1-5 Vdc low power wiring

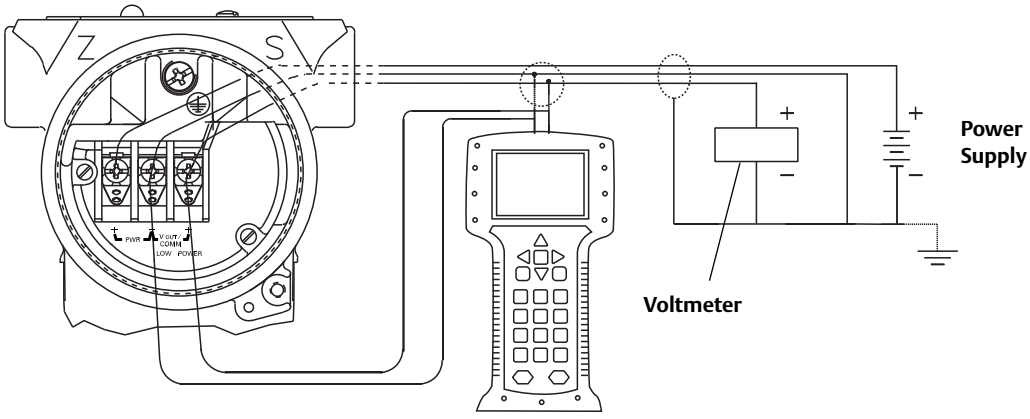

Perform the following procedure to make wiring connections:

⚠ 1. Remove the housing cover on terminal compartment side. Do not remove the cover in explosive atmospheres when the circuit is live. Signal wiring supplies all power to the transmitter.

⚠ 2. a. For 4-20 mA HART output, connect the positive lead to the terminal marked (+) and the negative lead to the terminal marked (pwr/comm -). Do not connect powered signal wiring to the test terminals. Power could damage the test diode.

b. For 1-5 Vdc HART Low Power output, connect the positive lead to the terminal marked (+ pwr) and the negative lead to the terminal marked (pwr -). Connect signal lead to V_{out} / comm +.

3. Plug and seal unused conduit connection on the transmitter housing to avoid moisture accumulation in the terminal side. Install wiring with a drip loop. Arrange the drip loop so the bottom is lower than the conduit connections and the transmitter housing.

Power supply for 4-20 mA HART

Transmitter operates on 10.5 - 42.4 Vdc. The dc power supply should provide power with less than two percent ripple.

Note
A minimum loop resistance of 250 ohms is required to communicate with a Field Communicator. If a single power supply is used to power more than one 3051 transmitter, the power supply used, and circuitry common to the transmitters, should not have more than 20 ohms of impedance at 1200 Hz.

Figure 2-18. Load limitation

Maximum Loop Resistance = 43.5 * (Power Supply Voltage – 10.5)

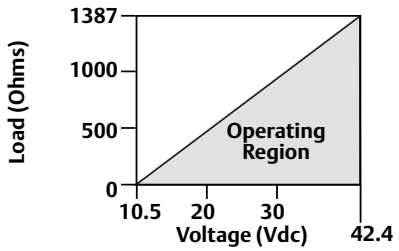

The Field Communicator requires a minimum loop resistance of 250Ω for communication.

The total resistance load is the sum of the resistance of the signal leads and the load resistance of the controller, indicator, and related pieces. Note that the resistance of intrinsic safety barriers, if used, must be included.

⚠ See "Safety messages" on page 5 for complete warning

Power supply for 1-5 Vdc HART low power

Low power transmitters operate on 6-14 Vdc. The dc power supply should provide power with less than two percent ripple. The V_{out} load should be 100 kΩ or greater.

2.9.3 Transient protection terminal block

The transmitter will withstand electrical transients of the energy level usually encountered in static discharges or induced switching transients. However, high-energy transients, such as those induced in wiring from nearby lightning strikes, can damage the transmitter.

The transient protection terminal block can be ordered as an installed option (Option Code T1 in the transmitter model number) or as a spare part to retrofit existing 3051 transmitters in the field. See "Spare parts" on page 164 for spare part numbers. The lightning bolt symbol shown in Figure 2-19 and Figure 2-20 identifies the transient protection terminal block.

Figure 2-19. 4-20 mA HART wiring with transient protection

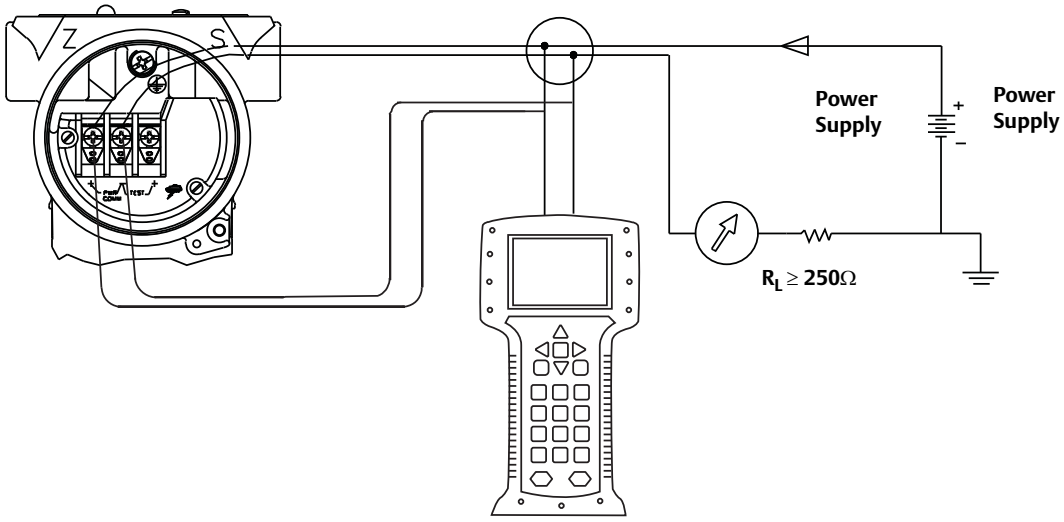

Figure 2-20. 1-5 Vdc low power wiring with transient protection

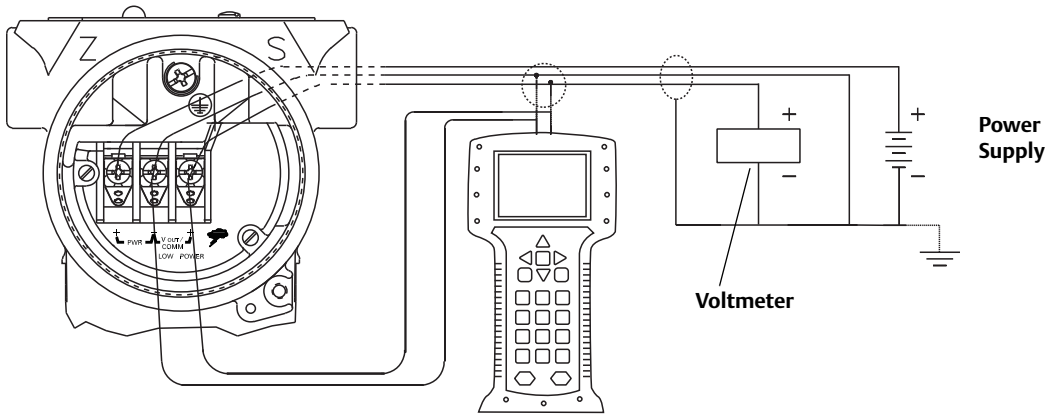

Figure 2-21. Wiring pair and ground

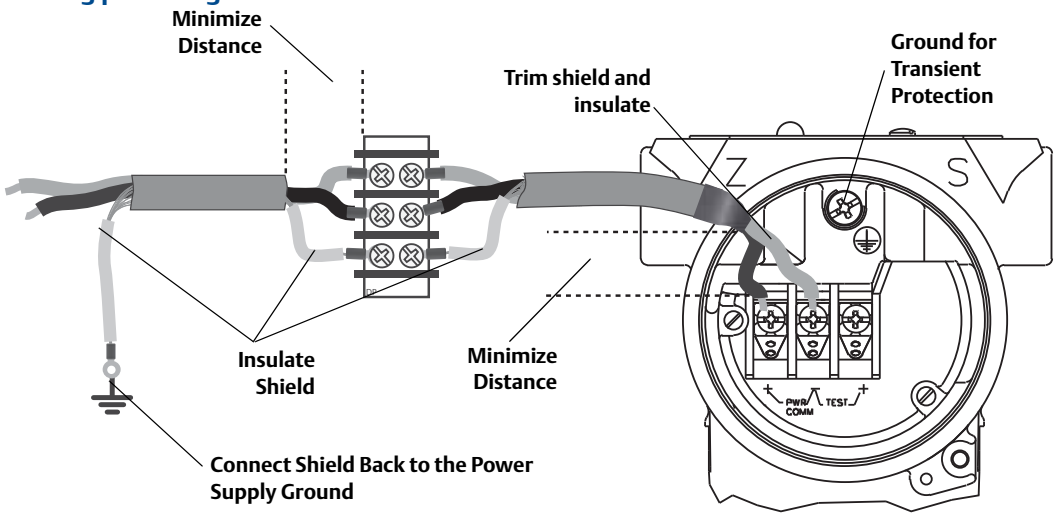

Note
The transient protection terminal block does not provide transient protection unless the transmitter case is properly grounded. Use the guidelines to ground the transmitter case. Refer to page 27.

Do not run the transient protection ground wire with signal wiring as the ground wire may carry excessive current if a lightning strike occurs.

2.9.4 Grounding

⚠ Use the following techniques to properly ground the transmitter signal wiring and case:

Signal wiring

Do not run signal wiring in conduit or open trays with power wiring or near heavy electrical equipment. It is important that the instrument cable shield be:

- Trimmed close and insulated from touching the transmitter housing
- Connected to the next shield if cable is routed through a junction box
- Connected to a good earth ground at the power supply end

For 4-20 mA HART output, the signal wiring may be grounded at any one point on the signal loop or may be left ungrounded. The negative terminal of the power supply is a recommended grounding point.

For 1-5 Vdc HART Low Power output, the power wires may be grounded at only one point or left ungrounded. The negative terminal of the power supply is a recommended grounding point.

Transmitter case

Always ground the transmitter case in accordance with national and local electrical codes. The most effective transmitter case grounding method is a direct connection to earth ground with minimal impedance. Methods for grounding the transmitter case include:

- Internal Ground Connection: The Internal Ground Connection screw is inside the FIELD TERMINALS side of the electronics housing. This screw is identified by a ground symbol (⏚). The ground connection screw is standard on all Rosemount 3051 transmitters. Refer to Figure 2-22.

Figure 2-22. Internal ground screw

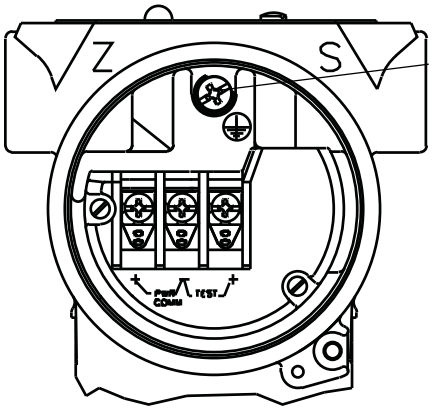

Figure 2-23. External ground assembly

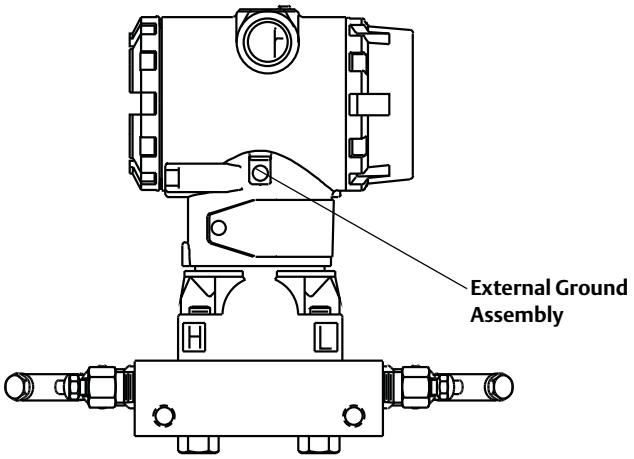

Note
Grounding the transmitter case via threaded conduit connection may not provide sufficient ground continuity.

2.10 Hazardous locations certifications

⚠ Individual transmitters are clearly marked with a tag indicating the approvals they carry. Transmitters must be installed in accordance with all applicable codes and standards to maintain these certified ratings. Refer to "Hazardous locations certifications" on page 177 for information on these approvals.

2.11 Rosemount 305, 306, and 304 manifolds

The 305 Integral Manifold is available in two designs: Traditional and Coplanar. The traditional 305 Integral Manifold can be mounted to most primary elements with mounting adapters in the market today. The 306 Integral Manifold is used with the 3051T in-line transmitters to provide block-and-bleed valve capabilities of up to 10000 psi (690 bar).

Figure 2-24. Manifolds

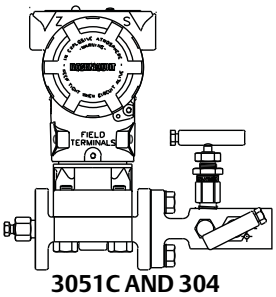

3051C AND 304 CONVENTIONAL

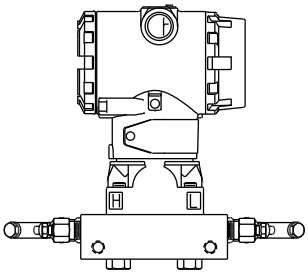

3051C AND 305 INTEGRAL COPLANAR

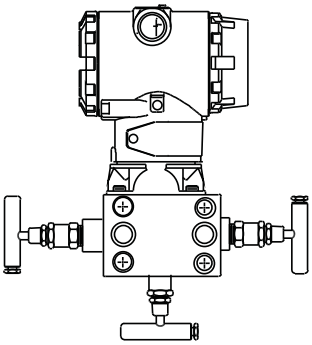

3051C AND 305 INTEGRAL TRADITIONAL

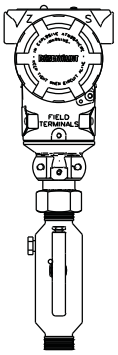

3051T AND 306 IN-LINE

2.11.1 Rosemount 305 integral manifold installation procedure

To install a 305 Integral Manifold to a 3051 transmitter:

⚠ 1. Inspect the PTFE sensor module o-rings. Undamaged o-rings may be reused. If the o-rings are damaged (if they have nicks or cuts, for example), replace with o-rings designed for Rosemount transmitter.

Important
If replacing the o-rings, take care not to scratch or deface the o-ring grooves or the surface of the isolating diaphragm while you remove the damaged o-rings.

2. Install the Integral Manifold on the sensor module. Use the four 2.25-in. manifold bolts for alignment. Finger tighten the bolts, then tighten the bolts incrementally in a cross pattern to final torque value. See "Flange bolts" on page 11 for complete bolt installation information and torque values. When fully tightened, the bolts should extend through the top of the sensor module housing.

3. If the PTFE sensor module o-rings have been replaced, the flange bolts should be re-tightened after installation to compensate for cold flow of the o-rings.

Note
Always perform a zero trim on the transmitter/manifold assembly after installation to eliminate mounting effects.

2.11.2 Rosemount 306 integral manifold installation procedure

The 306 Manifold is for use only with a 3051T In-line transmitter.

⚠ Assemble the 306 Manifold to the 3051T In-line transmitter with a thread sealant.

2.11.3 Rosemount 304 conventional manifold installation procedure

To install a 304 Conventional Manifold to a 3051 transmitter:

1. Align the Conventional Manifold with the transmitter flange. Use the four manifold bolts for alignment.

2. Finger tighten the bolts, then tighten the bolts incrementally in a cross pattern to final torque value. See "Flange bolts" on page 11 for complete bolt installation information and torque values. When fully tightened, the bolts should extend through the top of the sensor module housing.

3. Leak-check assembly to maximum pressure range of transmitter.

2.11.4 Manifold operation

⚠ Improper installation or operation of manifolds may result in process leaks, which may cause death or serious injury.

⚠ See "Safety messages" on page 5 for complete warning information.

Always perform a zero trim on the transmitter/manifold assembly after installation to eliminate any shift due to mounting effects. See "Sensor Trim Overview" on page 10.

Three and five-valve configurations shown:

In normal operation the two block valves between the process and instrument ports will be open and the equalizing valve will be closed.

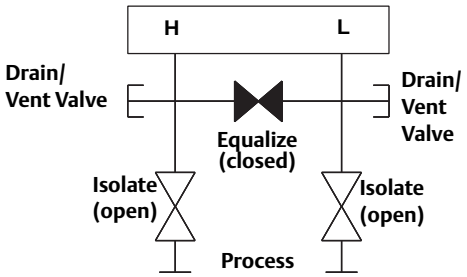

1. To zero the 3051, close the block valve to the low pressure (downstream) side of the transmitter first.

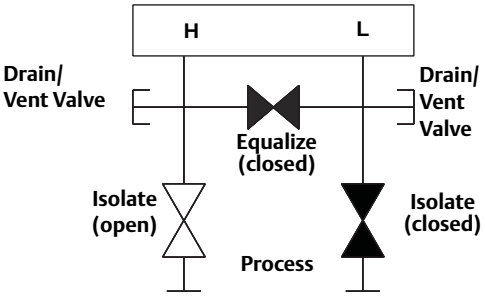

2. Open the center (equalize) valve to equalize the pressure on both sides of the transmitter. The manifold valves are now in the proper configuration for zeroing the transmitter.

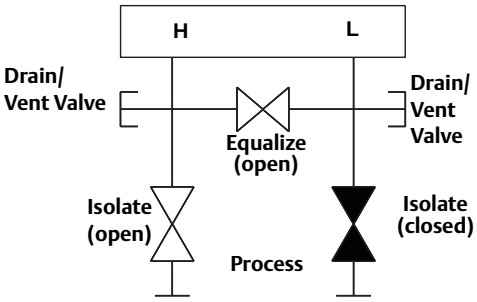

3. After zeroing the transmitter, close the equalizing valve.

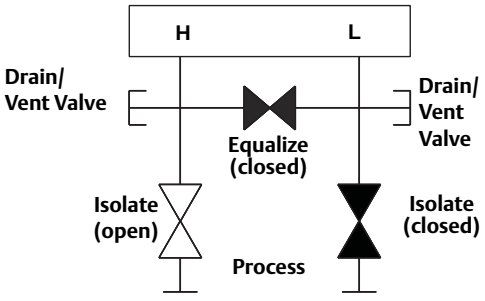

4. Open the block valve on the low pressure side of the transmitter to return the transmitter to service.

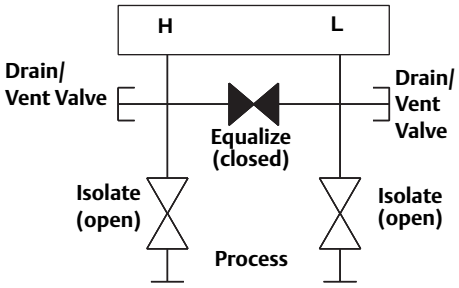

Five-valve Natural Gas configurations shown:

In normal operation, the two block valves between the process and instrument ports will be open, and the equalizing valves will be closed.

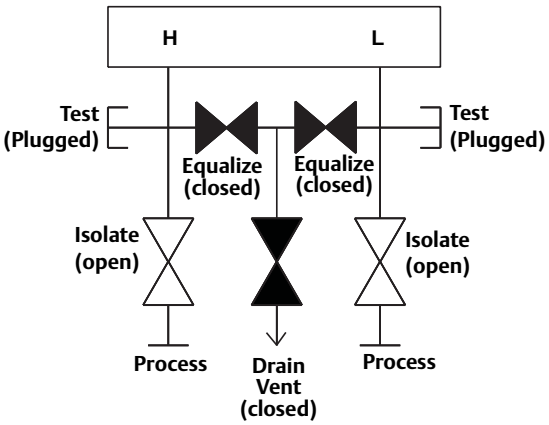

1. To zero the 3051, first close the block valve on the low pressure (downstream) side of the transmitter.

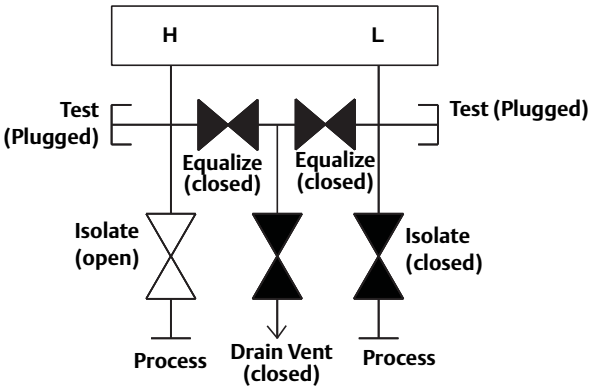

Note
Do not open the low side equalize valve before the high side equalize valve. Doing so will overpressure the transmitter.

2. Open the equalize valve on the high pressure (upstream) side of the transmitter.

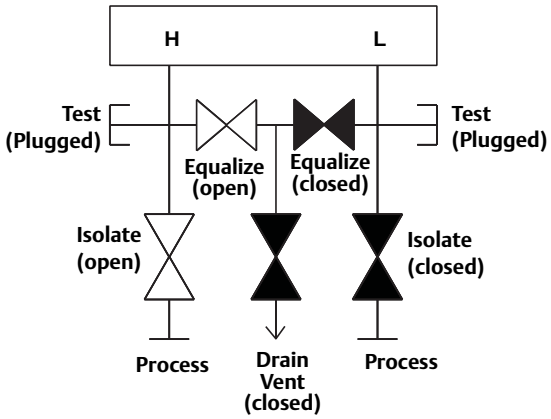

3. Open the equalize valve on the low pressure (downstream) side of the transmitter. The manifold is now in the proper configuration for zeroing the transmitter.

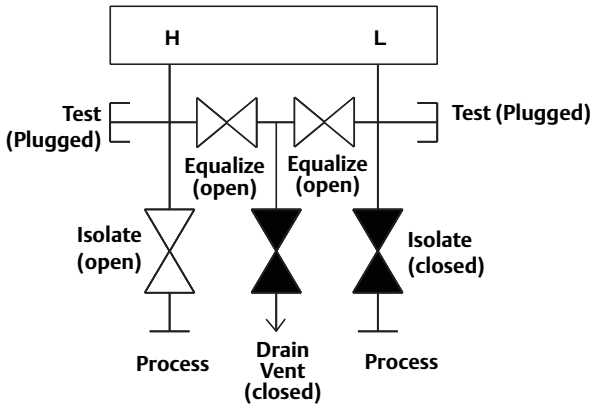

4. After zeroing the transmitter, close the equalize valve on the low pressure (downstream) side of the transmitter.

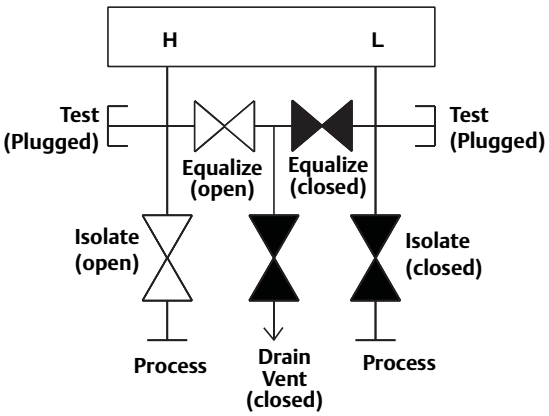

2.12 Liquid level measurement

Differential pressure transmitters used for liquid level applications measure hydrostatic pressure head. Liquid level and specific gravity of a liquid are factors in determining pressure head. This pressure is equal to the liquid height above the tap multiplied by the specific gravity of the liquid. Pressure head is independent of volume or vessel shape.

5. Close the equalize valve on the high pressure (upstream) side.

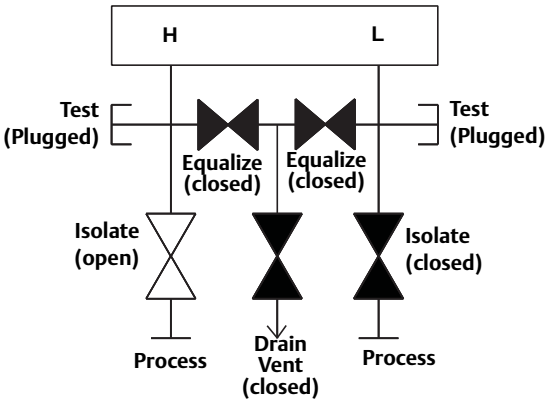

6. Finally, to return the transmitter to service, open the low side isolation valve.

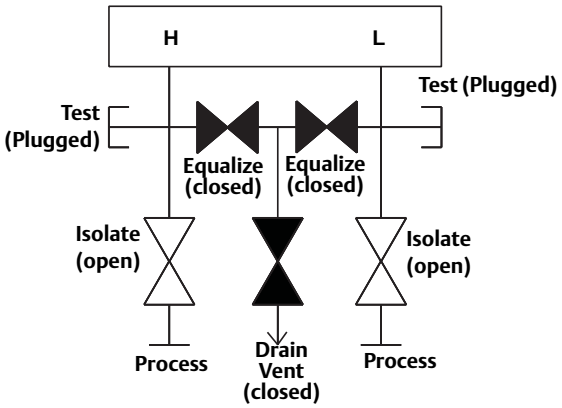

2.12.1 Open vessels

A pressure transmitter mounted near a tank bottom measures the pressure of the liquid above.

Make a connection to the high pressure side of the transmitter, and vent the low pressure side to the atmosphere. Pressure head equals the liquid's specific gravity multiplied by the liquid height above the tap.

Zero range suppression is required if the transmitter lies below the zero point of the desired level range. Figure 2-25 shows a liquid level measurement example.

2.12.2 Closed vessels

Pressure above a liquid affects the pressure measured at the bottom of a closed vessel. The liquid specific gravity multiplied by the liquid height plus the vessel pressure equals the pressure at the bottom of the vessel.

To measure true level, the vessel pressure must be subtracted from the vessel bottom pressure. To do this, make a pressure tap at the top of the vessel and connect this to the low side of the transmitter. Vessel pressure is then equally applied to both the high and low sides of the transmitter. The resulting differential pressure is proportional to liquid height multiplied by the liquid specific gravity.

Dry leg condition

Low-side transmitter piping will remain empty if gas above the liquid does not condense. This is a dry leg condition. Range determination calculations are the same as those described for bottom-mounted transmitters in open vessels, as shown in Figure 2-25.

Figure 2-25. Liquid level measurement example.

Let X equal the vertical distance between the minimum and maximum measurable levels (500 in.).
Let Y equal the vertical distance between the transmitter datum line and the minimum measurable level (100 in.).
Let SG equal the specific gravity of the fluid (0.9).
Let h equal the maximum head pressure to be measured in inches of water.
Let e equal head pressure produced by Y expressed in inches of water.
Let Range equal e to e + h.

Then h = (X)(SG)
= 500 x 0.9
= 450 inH_2O
e = (Y)(SG)
= 100 x 0.9
= 90 inH_2O
Range = 90 to 540 inH_2O

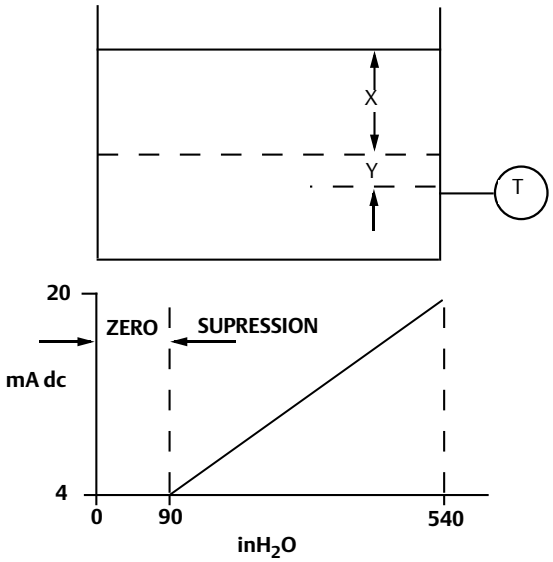

Wet leg condition

Condensation of the gas above the liquid slowly causes the low side of the transmitter piping to fill with liquid. The pipe is purposely filled with a convenient reference fluid to eliminate this potential error. This is a wet leg condition.

The reference fluid will exert a head pressure on the low side of the transmitter. Zero elevation of the range must then be made. See Figure 2-26.

Bubbler system in open vessel

A bubbler system that has a top-mounted pressure transmitter can be used in open vessels. This system consists of an air supply, pressure regulator, constant flow meter, pressure transmitter, and a tube that extends down into the vessel.

Bubble air through the tube at a constant flow rate. The pressure required to maintain flow equals the liquid's specific gravity multiplied by the vertical height of the liquid above the tube opening. Figure 2-27 shows a bubbler liquid level measurement example.

Figure 2-26. Wet leg example.

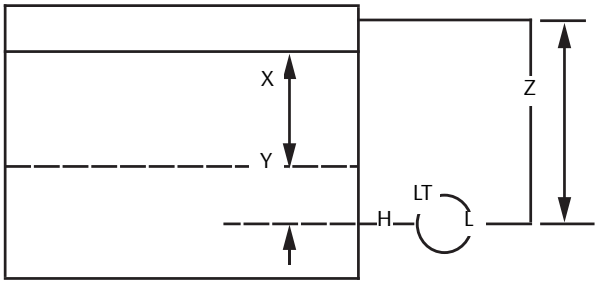

Let X equal the vertical distance between the minimum and maximum measurable levels (500 in.).
Let Y equal the vertical distance between the transmitter datum line and the minimum measurable level (50 in.).
Let z equal the vertical distance between the top of the liquid in the wet leg and the transmitter datum line (600 in.).
Let SG_1 equal the specific gravity of the fluid (1.0).
Let SG_2 equal the specific gravity of the fluid in the wet leg (1.1).
Let h equal the maximum head pressure to be measured in inches of water.
Let e equal the head pressure produced by Y expressed in inches of water.
Let s equal head pressure produced by z expressed in inches of water.
Let Range equal e – s to h + e – s.

Then $h = (X)(SG_1)$
$= 500 \times 1.0$
$= 500 \text{ in } H_2O$
$e = (Y)(SG_1)$
$= 50 \times 1.0$
$= 50 \text{ in} H_2O$
$s = (z)(SG_2)$
$= 600 \times 1.1$
$= 660 \text{ in} H_20$
Range = e – s to h + e – s.
= 50 – 660 to 500 + 50 – 660
= –610 to –110 $\text{in} H_20$

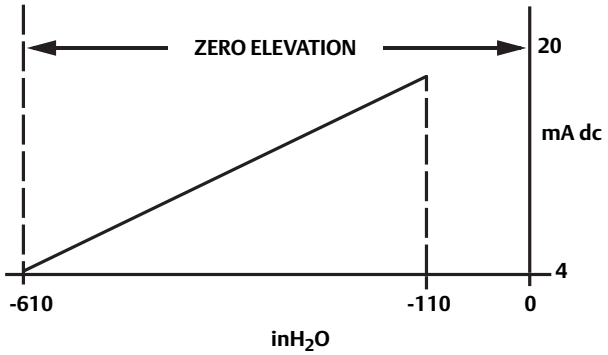

Figure 2-27. Bubbler liquid level measurement example.

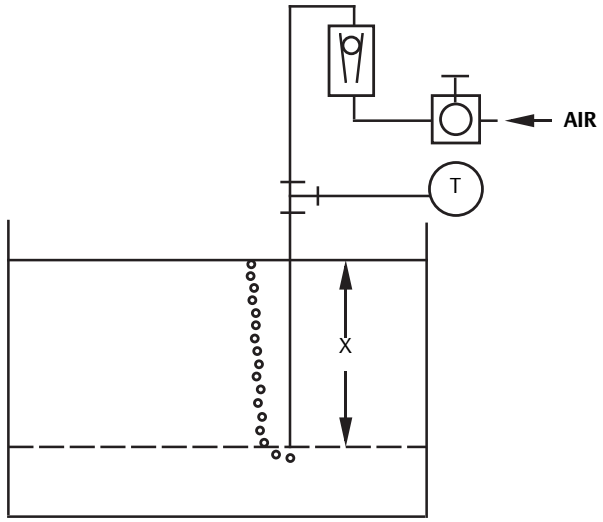

Let X equal the vertical distance between the minimum and maximum measurable levels (100 in.).
Let SG equal the specific gravity of the fluid (1.1).
Let h equal the maximum head pressure to be measured in inches of water.
Let Range equal zero to h.
Then h = (X)(SG)
= 100 x 1.1
= 110 inH_2O
Range = 0 to 110 inH_2O

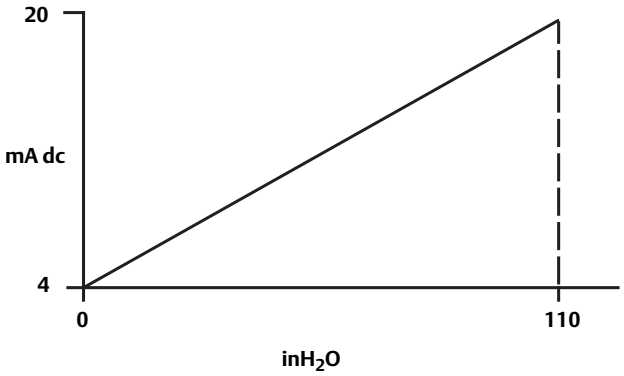

Section 3 Configuration

Overview . . . . . page 39
Safety messages . . . . . page 39
Commissioning . . . . . page 40
Configuration data review . . . . . page 42
Field communicator menu trees . . . . . page 44
Traditional fast key sequence . . . . . page 48
Check output . . . . . page 50
Basic setup . . . . . page 52
LCD display . . . . . page 58
Detailed setup . . . . . page 61
Diagnostics and service . . . . . page 62
Advanced functions . . . . . page 64
Multidrop communication . . . . . page 68

3.1 Overview

This section contains information on commissioning and tasks that should be performed on the bench prior to installation.

Field Communicator and AMS Device Manager instructions are given to perform configuration functions. For convenience, Field Communicator fast key sequences are labeled “Fast Keys” for each software function below the appropriate headings.

3.2 Safety messages

Procedures and instructions in this section may require special precautions to ensure the safety of the personnel performing the operations. Information that raises potential safety issues is indicated by a warning symbol (⚠). Refer to the following safety messages before performing an operation preceded by this symbol.

⚠ WARNING

Explosions could result in death or serious injury:

Installation of this transmitter in an explosive environment must be in accordance with the appropriate local, national, and international standards, codes, and practices. Please review the approvals section of the 3051 reference manual for any restrictions associated with a safe installation.

- Before connecting a Field Communicator in an explosive atmosphere, ensure the instruments in the loop are installed in accordance with intrinsically safe or non-incendive field wiring practices.
- In an explosion-proof/flameproof installation, do not remove the transmitter covers when power is applied to the unit.

Process leaks may cause harm or result in death.

- Install and tighten process connectors before applying pressure.

Electrical shock can result in death or serious injury.

- Avoid contact with the leads and terminals. High voltage that may be present on leads can cause electrical shock.

3.3 Commissioning

Commissioning consists of testing the transmitter and verifying transmitter configuration data. The 3051 transmitters can be commissioned either before or after installation. Commissioning the transmitter on the bench before installation using a Field Communicator or AMS Device Manager ensures that all transmitter components are in working order.

⚠ To commission on the bench, required equipment includes a power supply, a milliamp meter, and a Field Communicator or AMS Device Manager. Wire equipment as shown in Figure 3-1 and Figure 3-2. To ensure successful communication, a resistance of at least 250 ohms must be present between the Field Communicator loop connection and the power supply. Connect the Field Communicator leads to the terminals labeled “COMM” on the terminal block.

Set all transmitter hardware adjustments during commissioning to avoid exposing the transmitter electronics to the plant environment after installation.

When using a Field Communicator, any configuration changes made must be sent to the transmitter by using the Send key. AMS Device Manager configuration changes are implemented when the Apply button is clicked.

3.3.1 Setting the loop to manual

Whenever sending or requesting data that would disrupt the loop or change the output of the transmitter, set the process application loop to manual. The Field Communicator or AMS Device Manager will prompt you to set the loop to manual when necessary. Acknowledging this prompt does not set the loop to manual. The prompt is only a reminder; set the loop to manual as a separate operation.

3.3.2 Wiring diagrams

Connect the equipment as shown in Figure 3-1 for 4-20 mA HART or Figure 3-2 for 1-5 Vdc HART Low Power. To ensure successful communication, a resistance of at least 250 ohms must be present between the Field Communicator loop connection and the power supply. The Field Communicator or AMS Device Manager may be connected at "COMM" on the transmitter terminal block or across the load resistor. Connecting across the "TEST" terminals will prevent successful communication for 4-20 mA HART output.

Turn on the Field Communicator by pressing the ON/OFF key or log into AMS Device Manager. The Field Communicator or AMS Device Manager will search for a HART-compatible device and indicate when the connection is made. If the Field Communicator or AMS Device Manager fail to connect, it indicates that no device was found. If this occurs, refer to Section 5: Troubleshooting.

Figure 3-1. Wiring (4–20 mA)

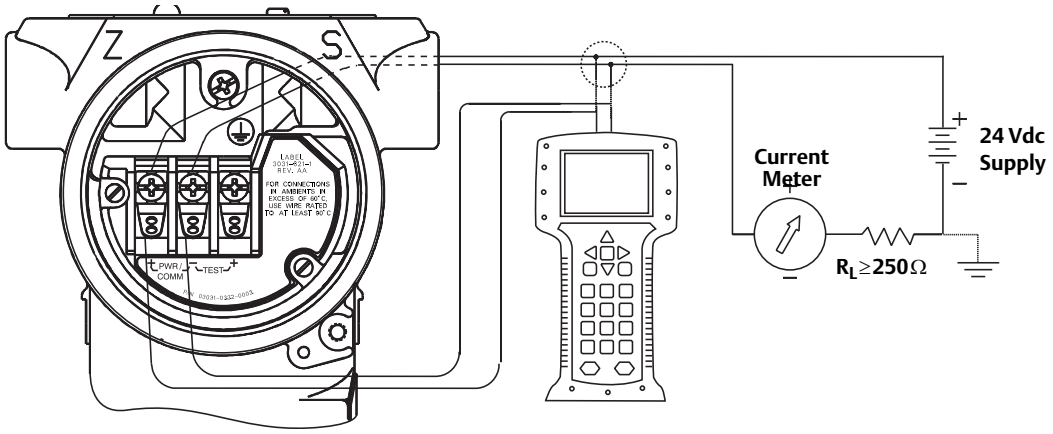

Figure 3-2. Wiring (Low-Power)

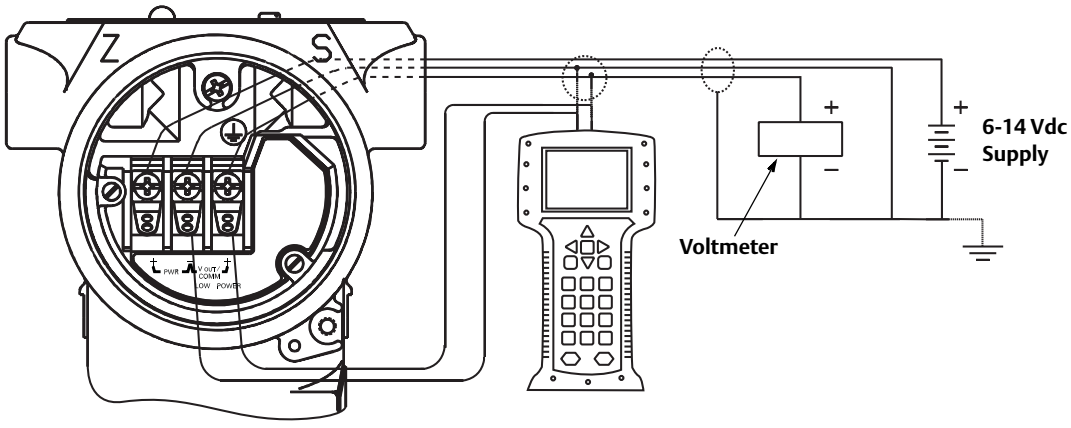

3.4 Configuration data review

Note
Information and procedures in this section that make use of Field Communicator fast key sequences and AMS Device Manager assume that the transmitter and communication equipment are connected, powered, and operating correctly.

The following is a list of factory default configurations. These can be reviewed by using the Field Communicator or AMS Device Manager.

Field communicator

Traditional 4-20 mA Fast Keys	1, 5
Traditional 1-5 Vdc Fast Keys	1, 5
Device Dashboard Fast Keys	1, 7

Enter the fast key sequence to view the configuration data.

Transmitter Model	Type
Tag	Range
Date	Descriptor
Message	Minimum and Maximum Sensor Limits
Minimum Span	Units
4 and 20 mA points	Output (linear or sq. root)
Damping	Alarm Setting (high, low)
Security Setting (on, off)	Local Zero/Span Keys (enabled, disabled)
Integral Display	Sensor Fill
Isolator Material	Flange (type, material)
O-Ring Material	Drain/Vent
Remote Seal (type, fill fluid, isolator material, number)	Transmitter S/N
Address	Sensor S/N

AMS device manager

Right click on the device and select Configuration Properties from the menu. Select the tabs to review the transmitter configuration data.

3.5 Field communicator

(Version 1.8)

3.5.1 Field communicator user interface

Figure 3-3. Traditional interface

The corresponding Menu Trees can be viewed on page 44 and page 45.

The fast key sequence can be viewed on page 48.

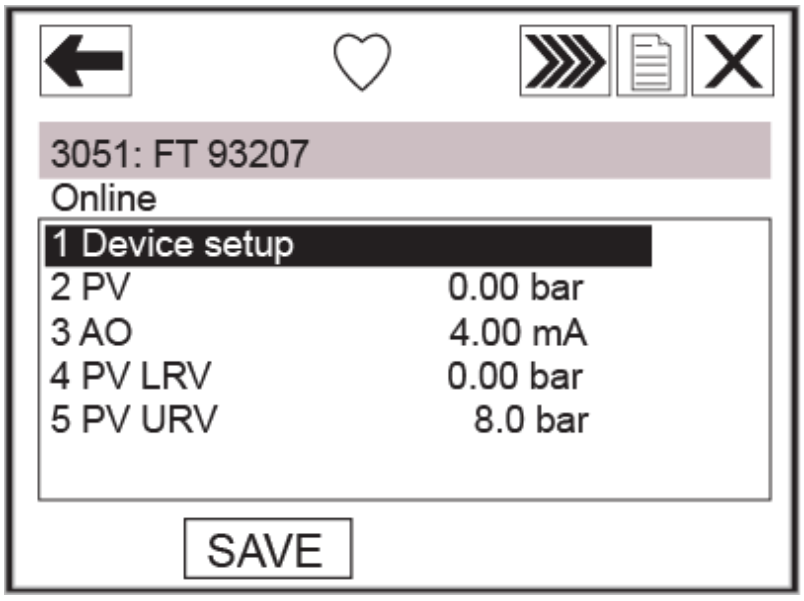

Figure 3-4. Device dashboard

The corresponding Menu Trees can be viewed on page 46 through page 48.

The fast key sequence can be viewed on page 50.

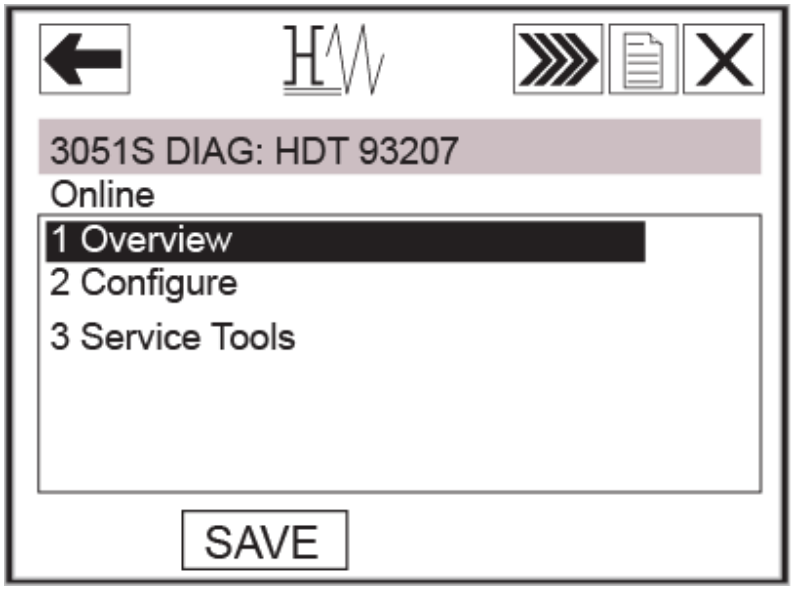

3.6 Field communicator menu trees

Figure 3-5. Rosemount 3051 traditional HART menu tree for 4-20 mA HART output

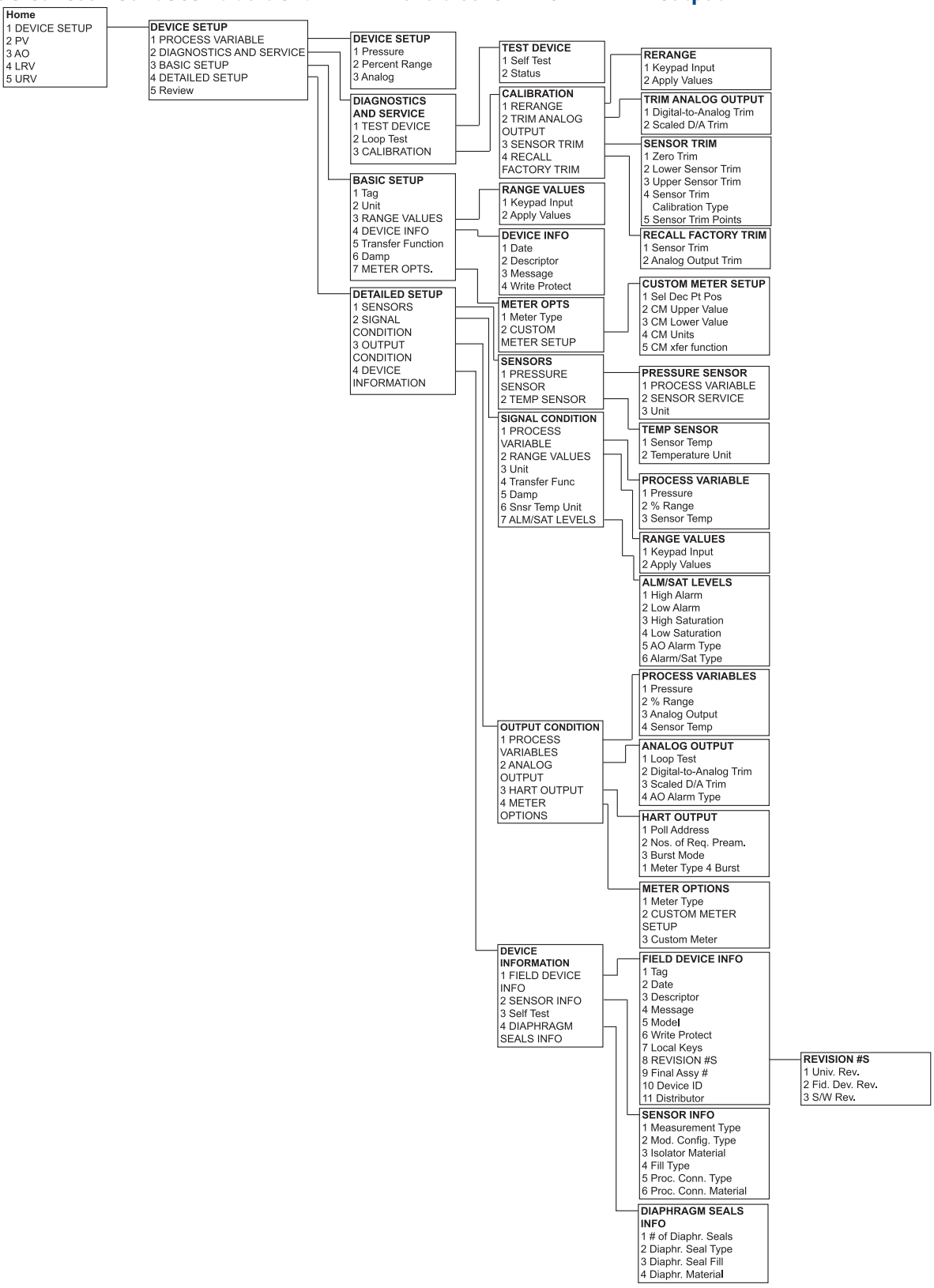

Figure 3-6. Rosemount 3051 traditional HART menu tree for 1-5 Vdc low power

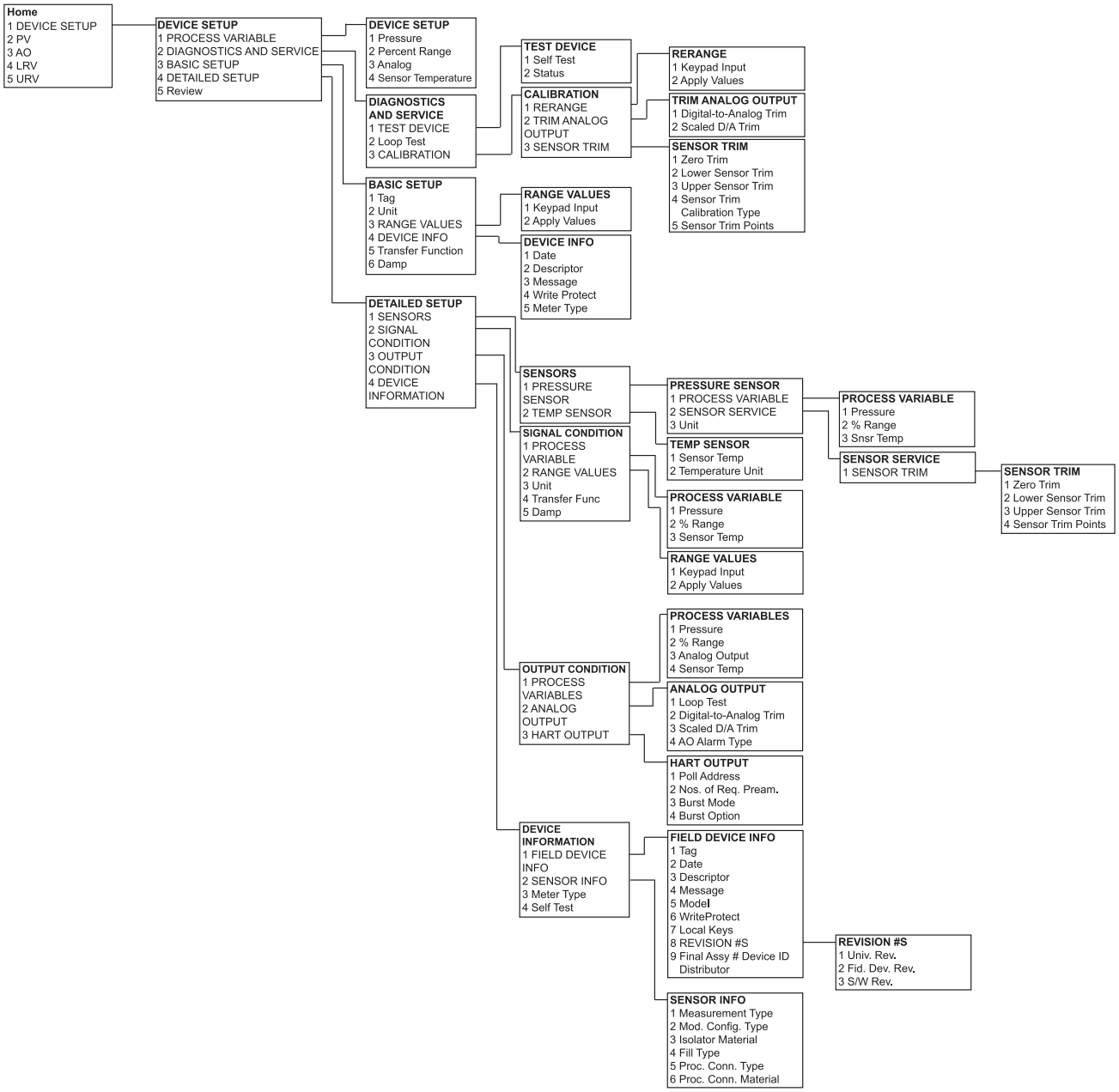

Figure 3-7. Rosemount 3051 device dashboard menu tree - overview

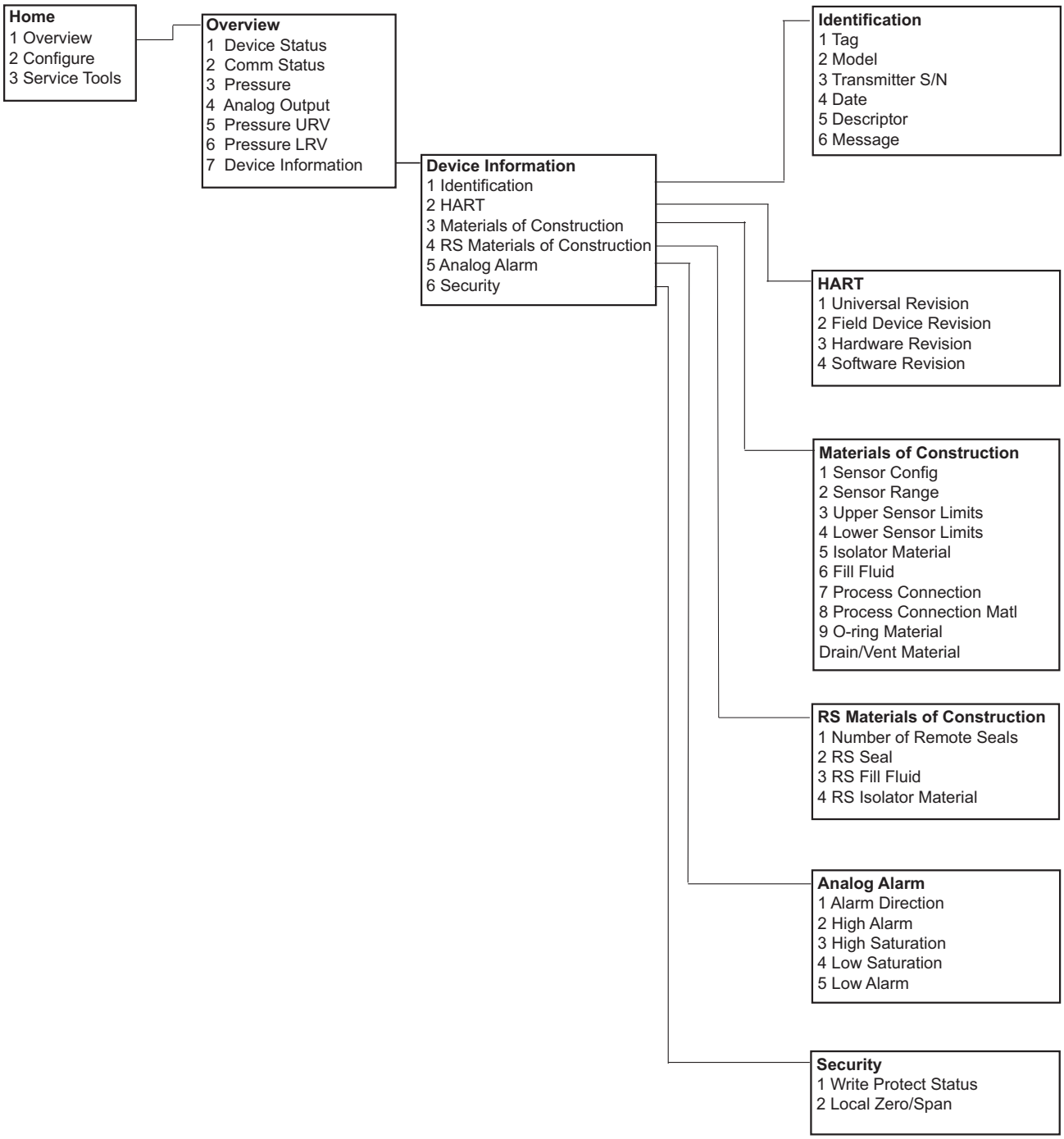

Figure 3-8. Rosemount 3051 device dashboard menu tree - configure

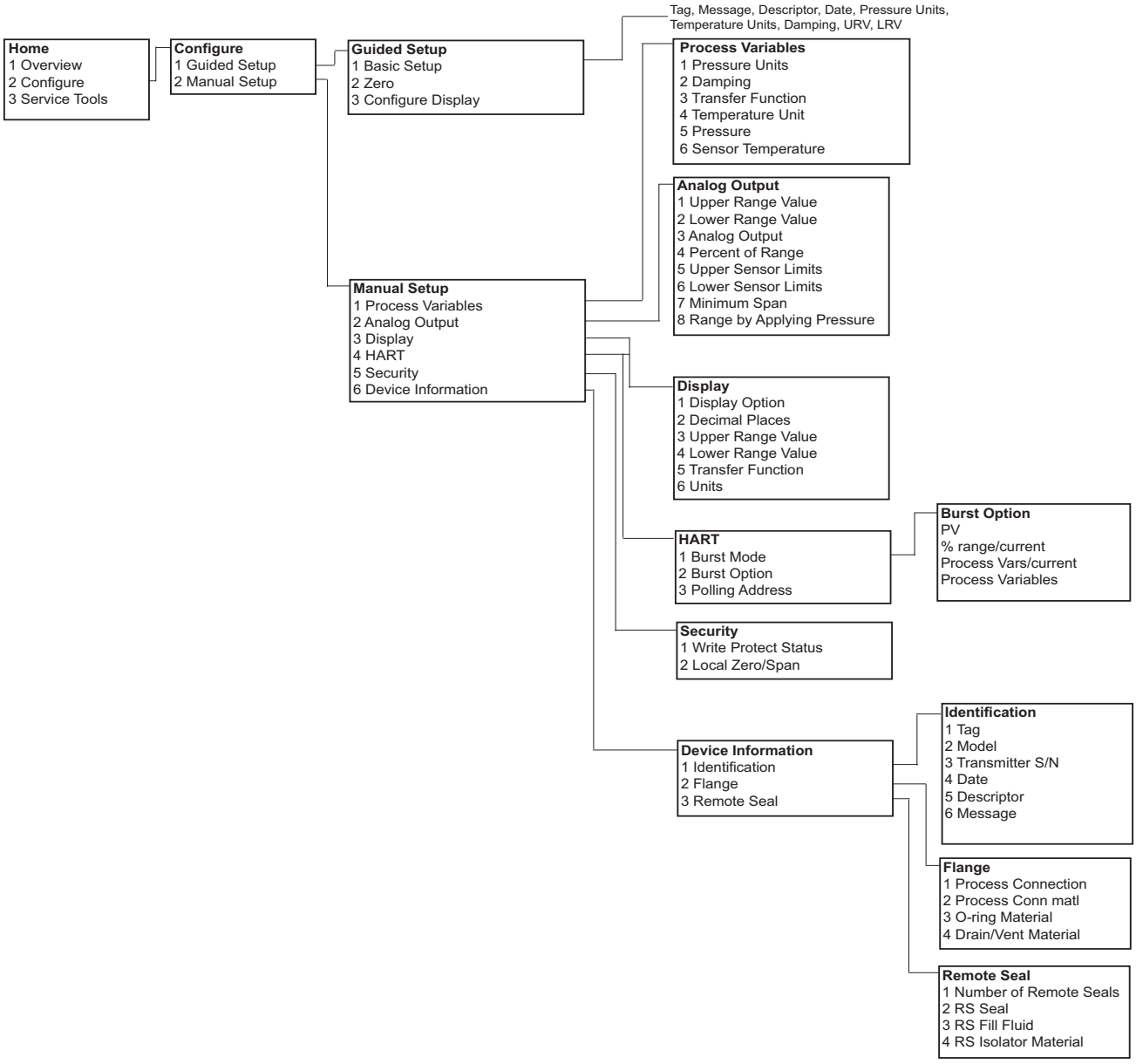

Figure 3-9. Rosemount 3051 device dashboard menu tree - service tools

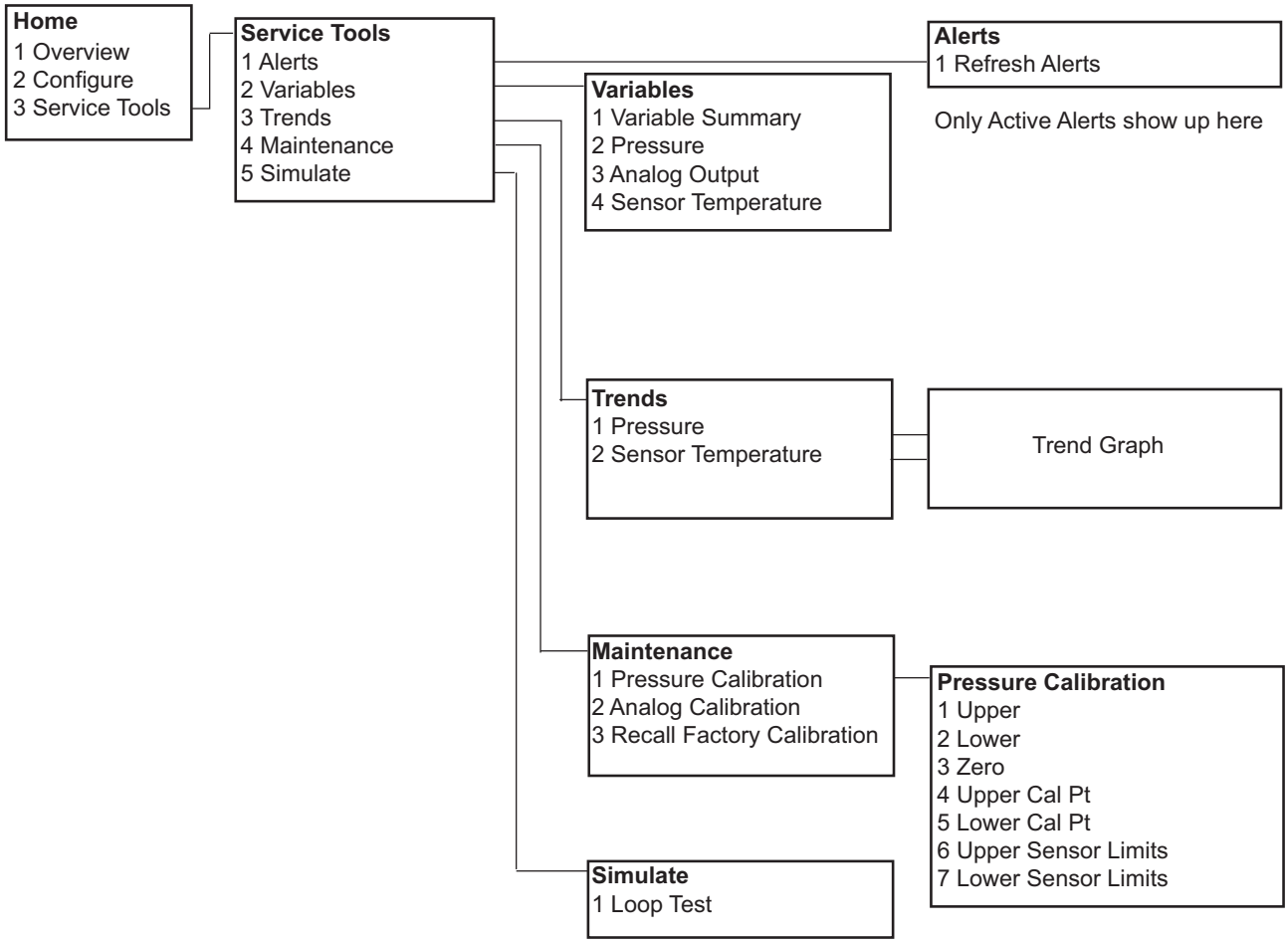

3.7 Traditional fast key sequence

A check (√) indicates the basic configuration parameters. At minimum, these parameters should be verified as part of the configuration and startup procedure.

Table 3-1. 3051 Traditional fast key sequence

	Function	4-20 mA HART	1-5 Vdc HART low power
√	Alarm and Saturation Levels	1, 4, 2, 7	N/A
	Analog Output Alarm Type	1, 4, 3, 2, 4	1, 4, 3, 2, 4
	Burst Mode Control	1, 4, 3, 3, 3	1, 4, 3, 3, 3
	Burst Operation	1, 4, 3, 3, 4	1, 4, 3, 3, 4
	Custom Meter Configuration	1, 3, 7, 2	N/A

	Function	4-20 mA HART	1-5 Vdc HART low power
	Custom Meter Value	1, 4, 3, 4, 3	N/A
√	Damping	1, 3, 6	1, 3, 6
	Date	1, 3, 4, 1	1, 3, 4, 1
	Descriptor	1, 3, 4, 2	1, 3, 4, 2
	Digital To Analog Trim (4-20 mA Output)	1, 2, 3, 2, 1	1, 2, 3, 2, 1
	Disable Local Span/Zero Adjustment	1, 4, 4, 1, 7	1, 4, 4, 1, 7
	Field Device Information	1, 4, 4, 1	1, 4, 4, 1
	Full Trim	1, 2, 3, 3	1, 2, 3, 3
	Keypad Input – Rerange	1, 2, 3, 1, 1	1, 2, 3, 1, 1
	Local Zero and Span Control	1, 4, 4, 1, 7	1, 4, 4, 1, 7
	Loop Test	1, 2, 2	1, 2, 2
	Lower Sensor Trim	1, 2, 3, 3, 2	1, 2, 3, 3, 2
	Message	1, 3, 4, 3	1, 3, 4, 3
	Meter Options	1, 4, 3, 4	N/A
	Number of Requested Preambles	1, 4, 3, 3, 2	1, 4, 3, 3, 2
	Poll Address	1, 4, 3, 3, 1	1, 4, 3, 3, 1
	Poll a Multidropped Transmitter	Left Arrow, 4, 1, 1	Left Arrow, 4, 1, 1
√	Range Values	1, 3, 3	1, 3, 3
	Rerange	1, 2, 3, 1	1, 2, 3, 1
	Scaled D/A Trim (4–20 mA Output)	1, 2, 3, 2, 2	1, 2, 3, 2, 2
	Self Test (Transmitter)	1, 2, 1, 1	1, 2, 1, 1
	Sensor Info	1, 4, 4, 2	1, 4, 4, 2
	Sensor Temperature	1, 1, 4	1, 1, 4
	Sensor Trim Points	1, 2, 3, 3, 4	1, 2, 3, 3, 4
	Status	1, 2, 1, 2	1, 2, 1, 2
√	Tag	1, 3, 1	1, 3, 1
√	Transfer Function (Setting Output Type)	1, 3, 5	1, 3, 5
	Transmitter Security (Write Protect)	1, 3, 4, 4	1, 3, 4, 4
	Trim Analog Output	1, 2, 3, 2	1, 2, 3, 2
√	Units (Process Variable)	1, 3, 2	1, 3, 2
	Upper Sensor Trim	1, 2, 3, 3, 3	1, 2, 3, 3, 3
	Zero Trim	1, 2, 3, 3, 1	1, 2, 3, 3, 1

Table 3-2. 3051 device dashboard fast key sequence

Function	4-20 mA HART
Alarm and Saturation Levels	1, 7, 5
Analog Output Alarm Type	1, 7, 5
Burst Mode Control	2, 2, 4, 1
Burst Option	2, 2, 4, 2
Custom Display Configuration	2, 2, 3
Damping	2, 2, 1, 2
Date	2, 2, 6, 1, 4
Descriptor	2, 2, 6, 1, 5
Digital to Analog Trim (4 - 20 mA Output)	3, 4, 2
Disable Zero & Span Adjustment	2, 2, 5, 2
Field Device Information	2, 2, 6
Loop Test	3, 5, 1
Lower Sensor Trim	3, 4, 1, 2
Message	2, 2, 6, 1, 6
Poll Address	2, 2, 4, 3
Range Values	1, 5
Rerange with Keypad	1, 5
Scaled D/A Trim (4 - 20 mA Output)	3, 4, 2
Sensor Temperature/Trend	3, 3, 2
Tag	2, 2, 6, 1, 1
Transfer Function	2, 2, 1, 3
Transmitter Security (Write Protect)	2, 2, 5, 1
Units	2, 2, 1, 1
Upper Sensor Trim	3, 4, 1, 1
Zero Trim	3, 4, 1, 3

3.8 Check output

Before performing other transmitter on-line operations, review the digital output parameters to ensure that the transmitter is operating properly and is configured to the appropriate process variables.

3.8.1 Process variables

The process variables for the 3051 provide transmitter output, and are continuously updated. The pressure reading in both engineering units and percent of range will continue to track with pressures outside of the defined range from the lower to the upper range limit of the sensor module.

Field communicator

Traditional 4-20 mA Fast Keys	1, 1
Traditional 1-5 Vdc Fast Keys	1, 1
Device Dashboard Fast Keys	3, 2

The process variable menu displays the following process variables:

- Pressure
- Percent of range
- Analog output

AMS device manager

Right click on the device and select Process Variables... from the menu.The *Process Variable* screen displays the following process variables:

- Pressure
- Percent of range
- Analog output

3.8.2 Sensor temperature

The 3051 contains a temperature sensor near the pressure sensor in the sensor module. When reading this temperature, keep in mind the sensor is not a process temperature reading.

Field communicator

Traditional 4-20 mA Fast Keys	1, 1, 4
Traditional 1-5 Vdc Fast Keys	1, 1, 4
Device Dashboard Fast Keys	3, 2, 4

Enter the fast key sequence “Sensor Temperature” to view the sensor temperature reading.

AMS device manager

Right click on the device and select Process Variables... from the menu. “Snsr Temp” is the sensor temperature reading.

3.9 Basic setup

3.9.1 Set process variable units

The PV Unit command sets the process variable units to allow you to monitor your process using the appropriate units of measure.

Field communicator

Traditional 4-20 mA Fast Keys	1, 3, 2
Traditional 1-5 Vdc Fast Keys	1, 3, 2
Device Dashboard Fast Keys	2, 2, 1, 1

Enter the fast key sequence “Set Process Variable Units.” Select from the following engineering units:

- inH_2O
- inHg
- ftH_2O
- mmH_2O
- mmHg
- psi
- bar
- mbar
- g/cm^2
- kg/cm^2
- Pa
- kPa
- torr
- atm
- inH_2O at 4 °C
- mmH_2O at 4 °C

AMS device manager

Right click on the device and select Configure from the menu. In the *Basic Setup* tab, select Unit from the drop down menu to select units.

3.9.2 Set output (Transfer function)

The 3051 has two output settings: Linear and Square Root. Activate the square root output option to make analog output proportional to flow. As input approaches zero, the 3051 automatically switches to linear output in order to ensure a more smooth, stable output near zero (see Figure 3-10).

For 4-20 mA HART output, the slope of the curve is unity (y = x) from 0 to 0.6 percent of the ranged pressure input. This allows accurate calibration near zero. Greater slopes would cause large changes in output (for small changes at input). From 0.6 percent to 0.8 percent, curve slope equals 42 (y = 42x) to achieve continuous transition from linear to square root at the transition point.

Field communicator

Traditional 4-20 mA Fast Keys	1, 3, 5
Traditional 1-5 Vdc Fast Keys	1, 3, 5
Device Dashboard Fast Keys	2, 2, 1, 3

AMS device manager

Right click on the device and select Configure from the menu.

1. In the *Basic Setup* tab, use Xfer fnctn drop down menu to select output, click Apply.
2. After carefully reading the warning provided, select yes.

Figure 3-10. 4-20 mA HART square root output transition point

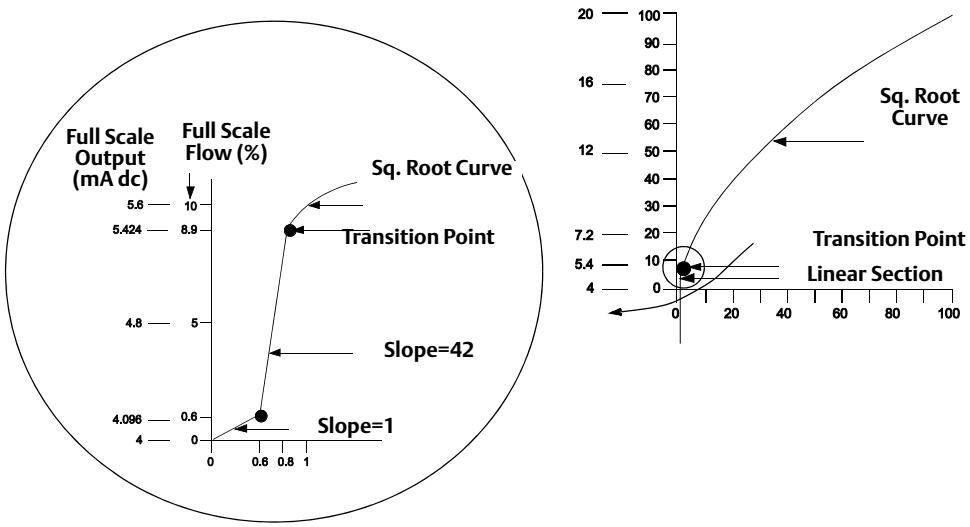

Note
For a flow turndown of greater than 10:1 it is not recommended to perform a square root extraction in the transmitter. Instead, perform the square root extraction in the system.

3.9.3 Rerange

The Range Values command sets each of the lower and upper range analog values (4 and 20 mA points and 1 and 5 Vdc points) to a pressure. The lower range point represents 0% of range and the upper range point represents 100% of range. In practice, the transmitter range values may be changed as often as necessary to reflect changing process requirements. For a complete listing of Range & Sensor limits, refer to "Range and sensor limits" on page 108.

Note
Transmitters are shipped from Emerson Process Management fully calibrated per request or by the factory default of full scale (zero to upper range limit).

Note
Regardless of the range points, the 3051 will measure and report all readings within the digital limits of the sensor. For example, if the 4 and 20 mA points are set to 0 and 10 inH_2O, and the transmitter detects a pressure of 25 inH_2O, it digitally outputs the 25 inH_2O reading and a 250% of range reading.

Select from one of the methods below to rerange the transmitter. Each method is unique; examine all options closely before deciding which method works best for your process.

- Rerange with a Field Communicator or AMS Device Manager only.
- Rerange with a pressure input source and a Field Communicator or AMS Device Manager.
- Rerange with a pressure input source and the local zero and span buttons (option D4).

Note
If the transmitter security switch is **ON,** adjustments to the zero and span will not be able to be made. Refer to "Configure security and alarm" on page 20 for security information.

Rerange with a Field Communicator or AMS Device Manager Only.

The easiest and most popular way to rerange is to use the Field Communicator only. This method changes the range values of the analog 4 and 20 mA points (1 and 5 Vdc points) independently without a pressure input. This means that when you change either the 4 or 20 mA setting, you also change the span.

An example for the 4-20 mA HART output:

If the transmitter is ranged so that

4 mA = 0 inH_2O, and
20 mA = 100 inH_2O,

and you change the 4 mA setting to 50 inH_2O using the communicator only, the new settings are:

4 mA = 50 inH_2O, and
20 mA = 100 inH_2O.

Note that the span was also changed from 100 inH_2O to 50 inH_2O, while the 20 mA setpoint remained at 100 inH_2O.

To obtain reverse output, simply set the 4 mA point at a greater numerical value than the 20 mA point. Using the above example, setting the 4 mA point at 100 inH_2O and the 20 mA point at 0 inH_2O will result in reverse output.

Field communicator

Traditional 4-20 mA Fast Keys	1, 2, 3, 1
Traditional 1-5 Vdc Fast Keys	1, 2, 3, 1
Device Dashboard Fast Keys	2, 2, 2, 1

From the *HOME* screen, enter the fast key sequence "Rerange with a Communicator Only."

AMS device manager

Right click on the device and select Configure from the menu. In the *Basic Setup* tab, locate the Analog Output box and perform the following procedure:

1. Enter the lower range value (LRV) and the upper range value (URV) in the fields provided. Click Apply.
2. After carefully reading the warning provided, select yes.

Rerange with a pressure input source and a field communicator or AMS device manager

Reranging using the Field Communicator and applied pressure is a way of reranging the transmitter when specific 4 and 20 mA points (1 and 5 Vdc points) are not calculated.

Note
The span is maintained when the 4 mA point (1 Vdc point) is set. The span changes when the 20 mA point (5 Vdc point) is set. If the lower range point is set to a value that causes the upper range point to exceed the sensor limit, the upper range point is automatically set to the sensor limit, and the span is adjusted accordingly.

Field communicator

Traditional 4-20 mA Fast Keys	1, 2, 3, 1, 2
Traditional 1-5 Vdc Fast Keys	1, 2, 3, 1, 2
Device Dashboard Fast Keys	2, 2, 2, 8

From the *HOME* screen, enter the fast key sequence Rerange with a pressure input source and a field communicator or AMS device manager .

AMS device manager

Right click on the device, select Calibrate, then Apply values from the menu.

1. Select Next after the control loop is set to manual.
2. From the *Apply Values* menu, follow the on-line instructions to configure lower and upper range values.
3. Select Exit to leave the *Apply Values* screen.
4. Select Next to acknowledge the loop can be returned to automatic control.
5. Select Finish to acknowledge the method is complete.

Rerange with a pressure input source and the local zero and span buttons (option D4)

Reranging using the local zero and span adjustments (see Figure 3-11 on page 57) and a pressure source is a way of reranging the transmitter when specific 4 and 20 mA (1 and 5 Vdc) points are not known and a communicator is not available.

Note
When you set the 4 mA (1 Vdc) point the span is maintained; when you set the 20 mA (5 Vdc) point the span changes. If you set the lower range point to a value that causes the upper range point to exceed the sensor limit, the upper range point is automatically set to the sensor limit, and the span is adjusted accordingly.

To rerange the transmitter using the span and zero buttons, perform the following procedure:

1. Loosen the screw holding the certifications label on the top of the transmitter housing. Slide the label to expose the zero and span buttons. See Figure 3-11.
2. Apply the desired 4 mA (1 Vdc) pressure value to the transmitter. Push and hold the zero adjustment button for at least two seconds but no longer than ten seconds.
3. Apply the desired 20 mA (5 Vdc) pressure value to the transmitter. Push and hold the span adjustment button for at least two seconds but no longer than ten seconds.

Figure 3-11. Zero and span buttons

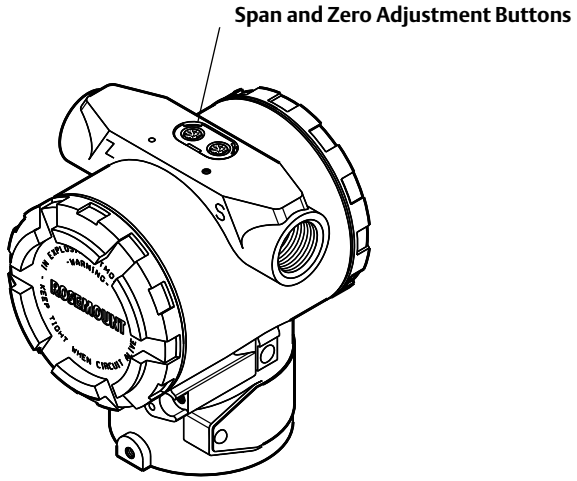

Note
The span is maintained when the 4 mA point (1 Vdc point) is set. The span changes when the 20 mA point (5 Vdc point) is set. If the lower range point is set to a value that causes the upper range point to exceed the sensor limit, the upper range point is automatically set to the sensor limit, and the span is adjusted accordingly.

3.9.4 Damping

The “Damp” command introduces a delay in the micro-processing which increases the response time of the transmitter; smoothing variations in output readings caused by rapid input changes. Determine the appropriate damping setting based on the necessary response time, signal stability, and other requirements of the loop dynamics within your system. The default damping value is 0.4 seconds and it can be set to any of ten pre-configured damping values between 0 and 25.6 seconds. See list below.

■ 0.00 seconds	■ 0.05 seconds	■ 0.10 seconds
■ 0.20 seconds	■ 0.40 seconds	■ 0.80 seconds
■ 1.60 seconds	■ 3.20 seconds	■ 6.40 seconds
■ 12.8 seconds	■ 25.6 seconds	

The current damping value can be determined by executing the Field Communicator fast keys or going to “Configure” in AMS Device Manager.

Field communicator

Traditional 4-20 mA Fast Keys	1, 3, 6
Traditional 1-5 Vdc Fast Keys	1, 3, 6
Device Dashboard Fast Keys	2, 2, 1, 2

AMS device manager

Right click on the device and select Configure from the menu.

1. In the *Basic Setup* tab, enter the damping value in the *Damp* field, click Apply.
2. After carefully reading the warning provided, select yes.

3.10 LCD display

The LCD display connects directly to the interface board which maintains direct access to the signal terminals. The display indicates output and abbreviated diagnostic messages. A display cover is provided to accommodate the display.

For 4-20 mA HART output, the LCD display features a two-line display. The first line of five characters displays the actual measured value, the second line of six characters displays the engineering units. The LCD can also display diagnostic messages. Refer to Figure 3-12.

For 1-5 Vdc HART Low Power output, the LCD display features a single-line display with four characters that display the actual value. The LCD can also display diagnostic messages. Refer to Figure 3-12.

Figure 3-12.

4-20 mA HART	1-5 Vdc HART Low Power
	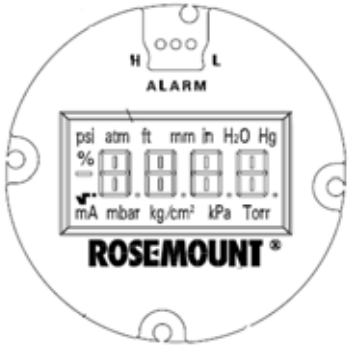

3.10.1 LCD display configuration for 4-20 mA HART only

The factory default alternates are between Engineering Units and % of Range. The LCD Display Configuration command allows customization of the LCD display to suit application requirements. The LCD display will alternate between the selected items:

■ Eng. Units only	■ Alternate Eng. Units & % of Range
■ % of Range only	■ Alternate Eng. Units & Custom Display
■ Custom Display only	■ Alternate % of Range & Custom Display

Field communicator

Traditional 4-20 mA Fast Keys	1, 3, 7
Device Dashboard Fast Keys	2, 2, 3

To change the standard default to one of the above options, follow these steps:

1. From the communicators main menu select (1) Device Setup, (3) Basic Setup, (7) Meter Options.
2. Select (1) Meter Type. Using the up or down arrows scroll up or down until the desired display has been highlighted. Press ENTER, SEND, and HOME.

AMS

Right click on the device and select Configuration Properties from the menu.

1. In the *Local Display* tab, locate the *Meter Type* area. Select the desired options to suit your application needs, click Apply.
2. An *Apply Parameter Modification* screen appears, enter desired information and click OK.
3. After carefully reading the warning provided, select OK.

3.10.2 Custom display configuration 4-20 mA HART only

The user-configurable scale is a feature that enables the LCD display to display flow, level, or custom pressure units. With this feature you can define the decimal point position, the upper range value, the lower range value, the engineering units, and the transfer function.The display can be configured using a Field Communicator or AMS.

The user-configurable scale feature can define:

- decimal point position
- upper range values
- lower range values
- engineering units
- transfer function

To configure the display with a Field Communicator, perform the following procedure:

1. Change the Meter Type to "Custom Meter" by using the Fast Key sequence under "LCD display configuration for 4-20 mA HART only" on page 59.
2. Next from the *ONLINE* screen, Select 1 Device Setup, 3 Basic Setup, 7 Meter Options, 2 Meter Options, 2 Custom Meter Setup.
3. To specify decimal point position:
   a. Select 1 Sel dec pt pos. Choose the decimal point representation that will provide the most accurate output for your application. For example, when outputting between 0 and 75 GPM, choose XX.XXX or use the decimal point examples below:

      XXXXX
      XXXX.X
      XXX.XX
      XX.XXX
      X.XXXX

Note
Make sure the selection has been sent and the decimal point has changed before proceeding to the next step.

   b. SEND
4. To specify a custom upper range value:
   a. Select *2 CM Upper Value*. Type the value that you want the transmitter to read at the 20 mA point.
   b. SEND
5. To specify a custom lower range value:
   a. Select *3 CM Lower Value*. Type the value that you want the transmitter to read at the 4 mA point.
   b. SEND
6. To define custom units:
   a. Select *4 CM Units*. Enter the custom units (five characters maximum) that you want the display to display.
   b. SEND
7. To choose the transmitter transfer function for the display:
   a. Select *5 CM xfer fnct*. Enter the transmitter transfer function for the display. Select *sq root* to display flow units. The custom meter transfer function is independent of the analog output transfer function.
8. Select SEND to upload the configuration to the transmitter.

⚠ See "Safety messages" on page 39 for complete warning information.

3.11 Detailed setup

3.11.1 Failure mode alarm and saturation

The 3051 transmitters automatically and continuously perform self-diagnostic routines. If the self-diagnostic routines detect a failure, the transmitter drives its output outside of the normal saturation values. The transmitter will drive its output low or high based on the position of the failure mode alarm jumper. See Table 3-3, Table 3-4, and Table 3-5 for failure mode and saturation output levels. To select alarm position, see "Configure security and alarm" on page 20.

Table 3-3. 4-20 mA HART alarm and saturation values

Level	4–20 mA saturation	4–20 mA alarm
Low	3.9 mA	≤ 3.75 mA
High	20.8 mA	≥ 21.75 mA

Table 3-4. NAMUR-Compliant alarm and saturation values

Level	4–20 mA saturation	4–20 mA alarm
Low	3.8 mA	≤ 3.6 mA
High	20.5 mA	≥ 22.5 mA

Table 3-5. 1-5 Vdc HART low-power alarm and saturation values

Level	1–5 V saturation	1–5 V alarm
Low	0.97 V	≤ 0.95 V
High	5.20 V	≥ 5.4 V

Caution
Alarm level values will be affected by analog trim. Refer to "Analog output trim" on page 77.

Note
When a transmitter is in an alarm condition, the Field Communicator indicates the analog output the transmitter would drive if the alarm condition did not exist. The transmitter will alarm high in the event of failure if the alarm jumper is removed.

3.11.2 Alarm and saturation levels for burst mode

Transmitters set to burst mode handle saturation and alarm conditions differently.

Alarm conditions:

- Analog output switches to alarm value
- Primary variable is burst with a status bit set
- Percent of range follows primary variable
- Temperature is burst with a status bit set

Saturation:

- Analog output switches to saturation value
- Primary variable is burst normally
- Temperature is burst normally

3.11.3 Alarm and saturation values for multidrop mode

Transmitters set to multidrop mode handle saturation and alarm conditions differently.

Alarm conditions:

- Primary variable is sent with a status bit set
- Percent of range follows primary variable
- Temperature is sent with a status bit set

Saturation:

- Primary variable is sent normally
- Temperature is sent normally

3.11.4 Alarm level verification

If the transmitter electronics board, sensor module, or LCD display is repaired or replaced, verify the transmitter alarm level before returning the transmitter to service. This feature is also useful in testing the reaction of the control system to a transmitter in an alarm state. To verify the transmitter alarm values, perform a loop test and set the transmitter output to the alarm value (see Tables 3-3, 3-4, and 3-5 on page 61, and “Loop test” on page 62).

3.12 Diagnostics and service

Diagnostics and service functions listed below are primarily for use after field installation. The Loop Test feature is designed to verify proper loop wiring and transmitter output.

3.12.1 Loop test

The Loop Test command verifies the output of the transmitter, the integrity of the loop, and the operations of any recorders or similar devices installed in the loop.

Field communicator

Traditional 4-20 mA Fast Keys	1, 2, 2
Traditional 1-5 Vdc Fast Keys	1, 2, 2
Device Dashboard Fast Keys	3, 5, 1

To initiate a loop test, perform the following procedure:

1. a. For 4-20 mA HART output, connect a reference meter to the transmitter by either connecting the meter to the test terminals on the terminal block, or shunting transmitter power through the meter at some point in the loop.
   b. For 1-5 Vdc Low Power HART output, connect a reference meter to the V_{out} terminal.
2. From the *HOME* screen, enter the fast key sequence "Loop Test" to verify the output of the transmitter.
3. Select OK after the control loop is set to manual (see "Setting the loop to manual" on page 40).
4. Select a discrete milliamp level for the transmitter to output. At the CHOOSE ANALOG OUTPUT prompt select 1: 4mA (1 Vdc), select 2: 20mA (5 Vdc), or select 3: "Other" to manually input a value.
   a. If you are performing a loop test to verify the output of a transmitter, enter a value between 4 and 20 mA (1 and 5 Vdc).
   b. If you are performing a loop test to verify alarm levels, enter the value representing an alarm state (see Tables 3-3, 3-4, and 3-5 on page 61).
5. Check that the reference meter displays the commanded output value.
   a. If the values match, the transmitter and the loop are configured and functioning properly.
   b. If the values do not match, the meter may be attached to the wrong loop, there may be a fault in the wiring or power supply, the transmitter may require an output trim, or the reference meter may be malfunctioning.

After completing the test procedure, the display returns to the *Loop Test* screen to choose another output value or to end loop testing.

AMS device manager

Right click on the device and select Diagnostics and Test, then Loop Test from the menu.

1. a. For 4-20 mA HART output, connect a reference meter to the transmitter by either connecting the meter to the test terminals on the terminal block, or shunting transmitter power through the meter at some point in the loop.
   b. For 1-5 Vdc Low Power HART output, connect a reference meter to the V_{out} terminal.
2. Click Next after setting the control loop to manual.
3. Select desired analog output level. Click Next.
4. Click Next to acknowledge output being set to desired level.
5. Check that the reference meter displays the commanded output value.
   a. If the values match, the transmitter and the loop are configured and functioning properly.
   b. If the values do not match, the meter may be attached to the wrong loop, there may be a fault in the wiring or power supply, the transmitter may require an output trim, or the reference meter may be malfunctioning.

After completing the test procedure, the display returns to the *Loop Test* screen to choose another output value or to end loop testing.

6. Select End and click Next to end loop testing.
7. Select Next to acknowledge the loop can be returned to automatic control.
8. Select Finish to acknowledge the method is complete.

3.13 Advanced functions

3.13.1 Saving, recalling, and cloning configuration data

Use the cloning feature of the Field Communicator or the AMS Device Manager “User Configuration” feature to configure several 3051 transmitters similarly. Cloning involves configuring a transmitter, saving the configuration data, then sending a copy of the data to a separate transmitter. Several possible procedures exist when saving, recalling, and cloning configuration data. For complete instructions refer to the Field Communicator manual (publication no. 00809-0100-4276) or AMS Device Manager on-line guides. One common method is as follows:

Field communicator

Traditional 4-20 mA Fast Keys	left arrow, 1, 2
Traditional 1-5 Vdc Fast Keys	left arrow, 1, 2
Device Dashboard Fast Keys	3, 4, 3

1. Completely configure the first transmitter.
2. Save the configuration data:
   a. Select SAVE from the Field Communicator *HOME/ONLINE* screen.
   b. Ensure that the location to which the data will be saved is set to MODULE. If it is not, select 1: Location to set the save location to MODULE.
   c. Select 2: Name, to name the configuration data. The default is the transmitter tag number.
   d. Ensure that the data type is set to STANDARD. If the data type is NOT STANDARD, select 3: Data Type to set the data type to STANDARD.
   e. Select SAVE.
3. Connect and power the receiving transmitter and Field Communicator.
4. Select the back arrow from the *HOME/ONLINE* screen. The Field Communicator menu appears.
5. Select 1: Offline, 2: Saved Configuration, 1: Module Contents to reach the *MODULE CONTENTS* menu.
6. Use the DOWN ARROW to scroll through the list of configurations in the memory module, and use the RIGHT ARROW to select and retrieve the required configuration.
7. Select 1: Edit.
8. Select 1: Mark All.
9. Select SAVE.
10. Use the DOWN ARROW to scroll through the list of configurations in the memory module, and use the RIGHT ARROW to select the configuration again.
11. Select 3: Send to download the configuration to the transmitter.
12. Select OK after the control loop is set to manual.
13. After the configuration has been sent, select OK to acknowledge that the loop can be returned to automatic control.

When finished, the Field Communicator informs you of the status. Repeat Steps 3 through 13 to configure another transmitter.

Note
The transmitter receiving cloned data must have the same software version (or later) as the original transmitter.

AMS device manager creating a reusable copy

To create a reusable copy of a configuration perform the following procedure:

1. Completely configure the first transmitter.
2. Select View then User Configuration View from the menu bar (or click the toolbar button).
3. In the User Configuration window, right click and select New from the context menu.
4. In the *New* window, select a device from the list of templates shown, and click OK.
5. The template is copied into the User Configurations window, with the tag name highlighted; rename it as appropriate and press Enter.

Note
A device icon can also be copied by dragging and dropping a device template or any other device icon from AMS Device Manager Explorer or Device Connection View into the User Configurations window.

The “Compare Configurations” window appears, showing the Current values of the copied device on one side and mostly blank fields on the other (User Configuration) side.

6. Transfer values from the current configuration to the user configuration as appropriate or enter values by typing the values into the available fields.
7. Click Apply to apply the values, or click OK to apply the values and close the window.

AMS device manager applying a user configuration

Any amount of user configurations can be created for the application. They can also be saved, and applied to connected devices or to devices in the Device List or Plant Database.

Note
When using AMS Device Manager Revision 6.0 or later, the device to which the user configuration is applied, must be the same model type as the one created in the user configuration. When using AMS Device Manager Revision 5.0 or earlier, the same model type and revision number are required.

To apply a user configuration perform the following procedure:

1. Select the desired user configuration in the User Configurations window.
2. Drag the icon onto a like device in AMS Device Manager Explorer or Device Connection View. The Compare Configurations window opens, showing the parameters of the target device on one side and the parameters of the user configuration on the other.
3. Transfer parameters from the user configuration to the target device as desired. Click OK to apply the configuration and close the window.

3.13.2 Burst mode

When configured for burst mode, the 3051 provides faster digital communication from the transmitter to the control system by eliminating the time required for the control system to request information from the transmitter. Burst mode is compatible with the analog signal. Because the HART protocol features simultaneous digital and analog data transmission, the analog value can drive other equipment in the loop while the control system is receiving the digital information. Burst mode applies only to the transmission of dynamic data (pressure and temperature in engineering units, pressure in percent of range, and/or analog output), and does not affect the way other transmitter data is accessed.

Access to information other than dynamic transmitter data is obtained through the normal poll/response method of HART communication. A Field Communicator, AMS Device Manager or the control system may request any of the information that is normally available while the transmitter is in burst mode. Between each message sent by the transmitter, a short pause allows the Field Communicator, AMS Device Manager or a control system to initiate a request. The transmitter will receive the request, process the response message, and then continue "bursting" the data approximately three times per second.

Field communicator

Traditional 4-20 mA Fast Keys	1, 4, 3, 3, 3
Traditional 1-5 Vdc Fast Keys	1, 4, 3, 3, 3
Device Dashboard Fast Keys	2, 2, 4, 1

AMS device manager

Right click on the device and select Configure from the menu.

1. In the *HART* tab, use the drop down menu to select "Burst Mode ON or OFF." For "Burst option" select the desired properties from the drop down menu. Burst options are as follows:
   - PV
   - % range/current
   - Process vars/crnt
   - Process variables
2. After selecting options click Apply.
3. After carefully reading the warning provided, select yes.

3.14 Multidrop communication

Multidropping transmitters refers to the connection of several transmitters to a single communications transmission line. Communication between the host and the transmitters takes place digitally with the analog output of the transmitters deactivated. With smart communications protocol, up to fifteen transmitters can be connected on a single twisted pair of wires, or over leased phone lines.

Multidrop installation requires consideration of the update rate necessary from each transmitter, the combination of transmitter models, and the length of the transmission line. Communication with transmitters can be accomplished with HART modems and a host implementing HART protocol. Each transmitter is identified by a unique address (1–15) and responds to the commands defined in the HART protocol. Field Communicators and AMS Device Manager can test, configure, and format a multidropped transmitter the same way as a transmitter in a standard point-to-point installation.

Figure 3-13 shows a typical multidrop network. This figure is not intended as an installation diagram.

Note
A transmitter in multidrop mode has the analog output fixed at 4 mA. If an LCD display is installed to a transmitter in multidrop mode, it will alternate the display between “current fixed” and the specified LCD display output(s).

Figure 3-13. Typical multidrop network

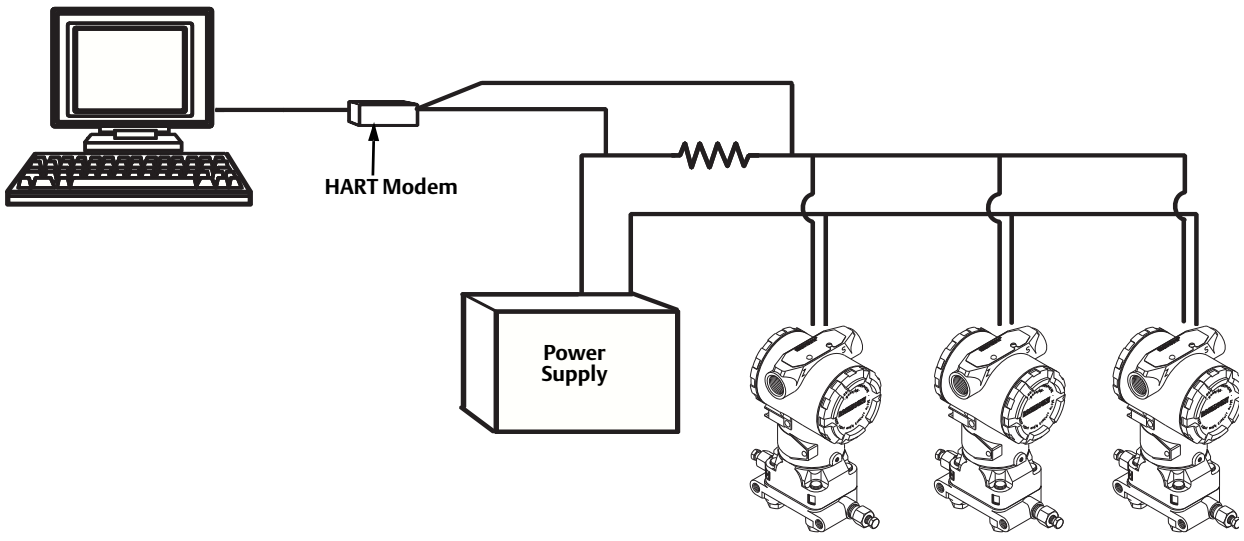

The 3051 is set to address zero (0) at the factory, which allows operation in the standard point-to-point manner with a 4–20 mA output signal. To activate multidrop communication, the transmitter address must be changed to a number from 1 to 15. This change deactivates the 4–20 mA analog output, sending it to 4 mA. It also disables the failure mode alarm signal, which is controlled by the upscale/downscale switch position. Failure signals in multidropped transmitters are communicated through HART messages.

3.15 Changing a transmitter address

To activate multidrop communication, the transmitter poll address must be assigned a number from 1 to 15, and each transmitter in a multidropped loop must have a unique poll address.

Field communicator

Traditional 4-20 mA Fast Keys	1, 4, 3, 3, 1
Traditional 1-5 Vdc Fast Keys	1, 4, 3, 3, 1
Device Dashboard Fast Keys	1, 2

AMS device manager

Right click on the device and select Configuration Properties from the menu.

1. In the *HART* tab, in *the ID* box, enter poll address located in the *Poll addr* box, click Apply.
2. After carefully reading the warning provided, select yes.

3.15.1 Communicating with a multidropped transmitter

Field communicator

Traditional 4-20 mA Fast Keys	1, 4, 3, 3, 2
Traditional 1-5 Vdc Fast Keys	1, 4, 3, 3, 2
Device Dashboard Fast Keys	1, 2

To communicate with a multidropped transmitter, configure the Field Communicator to poll for a non-zero address.

1. From the *HOME* screen, enter the fast key sequence “Communicating with a Multidropped Transmitter.”
2. On the polling menu, scroll down and select “Digital Poll.” In this mode, the Field Communicator automatically polls for devices at addresses 0-15 upon start up.

AMS device manager

Click on the HART modem icon and select Scan All Devices.

3.15.2 Polling a multidropped transmitter

Polling a multidropped loop determines the model, address, and number of transmitters on the given loop.

Field communicator

Traditional 4-20 mA Fast Keys	Left arrow, 4, 1
Traditional 1-5 Vdc Fast Keys	Left arrow, 4, 1
Device Dashboard Fast Keys	1, 2

AMS device manager

Click on the HART modem icon and select Scan All Devices.

Section 4 Operation and maintenance

Overview ..... page 71
Safety messages ..... page 71
Calibration overview ..... page 72
Analog output trim ..... page 77
Sensor trim ..... page 81

4.1 Overview

This section contains information on calibrating and diagnostics messages on Rosemount 3051 Pressure Transmitters.

Field Communicator and AMS instructions are given to perform configuration functions. For convenience, Field Communicator fast key sequences are labeled “Fast Keys” for each software function below the appropriate headings.

4.2 Safety messages

Procedures and instructions in this section may require special precautions to ensure the safety of the personnel performing the operations. Information that raises potential safety issues is indicated by a warning symbol (⚠). Refer to the following safety messages before performing an operation preceded by this symbol.

4.2.1 Warnings

⚠ WARNING

Explosions could result in death or serious injury:

Installation of this transmitter in an explosive environment must be in accordance with the appropriate local, national, and international standards, codes, and practices. Please review the approvals section of the 3051 reference manual for any restrictions associated with a safe installation.

- Before connecting a Field Communicator in an explosive atmosphere, ensure the instruments in the loop are installed in accordance with intrinsically safe or non-incendive field wiring practices.
- In an Explosion-Proof/Flameproof installation, do not remove the transmitter covers when power is applied to the unit.

Process leaks may cause harm or result in death.

- Install and tighten process connectors before applying pressure.

Electrical shock can result in death or serious injury.

- Avoid contact with the leads and terminals. High voltage that may be present on leads can cause electrical shock.

4.3 Calibration overview

Calibration is defined as the process required to optimize transmitter accuracy over a specific range by adjusting the factory sensor characterization curve located in the microprocessor. Possible procedures are:

- Reranging: Setting the lower and upper range points (4 and 20 mA or 1 and 5 Vdc) points at required pressures. Reranging does not change the factory sensor characterization curve. Refer to page 53.
- Analog Output Trim: Adjusts the transmitter's analog characterization curve to match the plant standard of the control loop. There are two types of digital-to-analog output trims. Refer to page 77.
  - Digital-to-Analog Output Trim on 4-20 mA HART output (page 77)
  - Digital-to-Analog Output Trim on 4-20 mA HART output Using Other Scale (page 79)
- Sensor Trim: Adjusts the position of the factory sensor characterization curve due to a change in the sensor characteristics over time or a change in test equipment. Trimming has two steps, zero and sensor trims. Refer to page 82 and page 83.
- Zero Trim (page 82)
- Sensor Trim (page 83)

Figure 4-1 on page 73 illustrates 3051 transmitter data flow. Data flow can be summarized in four major steps:

1. A change in pressure is measured by a change in the sensor output (Sensor Signal).
2. The sensor signal is converted to a digital format that is understood by the microprocessor (Analog-to-Digital Signal Conversion). Sensor trim functions affect this value. Select these options to alter the digital signal on the LCD or Field Communicator.
3. Corrections are performed in the microprocessor to obtain a digital representation of the process input (Digital PV).
4. The Digital PV is converted to an analog value (Digital-to-Analog Signal Conversion). Rerange and Analog trim functions affect this value. Select these options to change the range points (4-20 mA or 1-5 Vdc).

For a summary of recommended calibration procedures, refer to Table 4-1 on page 4-74. Also, Figure 4-1 on page 73 identifies the approximate transmitter location for each calibration task. Data flows from left to right and a parameter change affects all values to the right of the changed parameter.

Figure 4-1. Transmitter data flow with calibration options

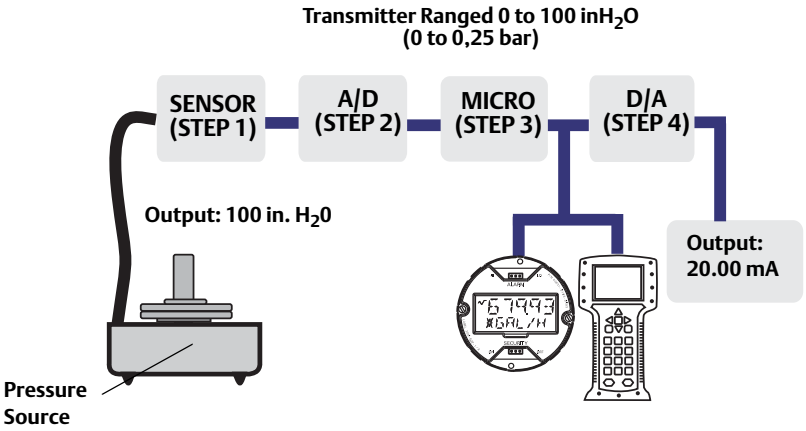

Table 4-1. Recommended calibration tasks

Transmitter	Bench calibration tasks	Field calibration tasks
3051CD 3051CG 3051L 3051TG, Range 1-4	1. Set output configuration parameters: a. Set the range points. b. Set the output units. c. Set the output type. d. Set the damping value. 2. *Optional*: Perform a sensor trim. (Accurate pressure source required.)	1. Reconfigure parameters if necessary. 2. Zero trim the transmitter to compensate for mounting effects or static pressure effects. 3. *Optional*: Perform an analog output trim. (Accurate multimeter required)
3051CA 3051TA 3051TG, Range 5	1. Set output configuration parameters: a. Set the range points. b. Set the output units. c. Set the output type. d. Set the damping value. 2. *Optional*: Perform a sensor trim if equipment available (accurate absolute pressure source required), otherwise perform the low trim value section of the sensor trim procedure.	1. Reconfigure parameters if necessary. 2. Perform low trim value section of the sensor trim procedure to correct for mounting position effects. 3. *Optional*: Perform an analog output trim (Accurate multimeter required)

Note
The 3051 has been carefully calibrated at the factory. Trimming adjusts the position of the factory characterization curve. It is possible to degrade performance of the transmitter if any trim is done improperly or with inaccurate equipment.

Note
A Field Communicator is required for all sensor and output trim procedures. Rosemount 3051C Range 4 and Range 5 transmitters require a special calibration procedure when used in differential pressure applications under high static line pressure (see"Select Finish to acknowledge the method is complete." on page 84).

4.3.1 Determining calibration frequency

Calibration frequency can vary greatly depending on the application, performance requirements, and process conditions. Use the following procedure to determine calibration frequency that meets the needs of your application.

1. Determine the performance required for your application.
2. Determine the operating conditions.
3. Calculate the Total Probable Error (TPE).
4. Calculate the stability per month.
5. Calculate the calibration frequency.

Sample calculation for a standard 3051C

Step 1: Determine the performance required for your application.

Required Performance:	0.30% of span

Step 2: Determine the operating conditions.

Transmitter:	3051CD, Range 2 [URL=250 inH_2O(623 mbar)]
Calibrated Span:	150 inH_2O (374 mbar)
Ambient Temperature Change:	± 50 °F (28 °C)
Line Pressure:	500 psig (34,5 bar)

Step 3: Calculate total probable error (TPE).

$$TPE = \sqrt{(ReferenceAccuracy)^2 + (TemperatureEffect)^2 + (StaticPressureEffect)^2} = 0.117\% \text{ of span}$$

Where:

Reference Accuracy = ± 0.065% of span

Ambient Temperature Effect = $\pm\left(\frac{(0.0125 \quad URL)}{Span} + 0.0625\right)$ % per 50 °F = ±0.0833% of span

Span Static Pressure Effect[1] =

0.1% reading per 1000 psi (69 bar) = ±0.05% of span at maximum span

(1)Zero static pressure effect removed by zero trimming at line pressure.

Step 4: Calculate the stability per month.

$$Stability = \pm\left[\frac{(0.125 \quad URL)}{Span}\right] \% \text{ of span for 5 years} = \pm 0.0035\% \text{ of span per month}$$

Step 5: Calculate calibration frequency.

$$\text{Cal. Freq.} = \frac{(\text{Req. Performance} - TPE)}{\text{Stability per Month}} = \frac{(0.30\% - 0.117\%)}{0.0035\%} = (52) \text{months}$$

Sample calculation for 3051C with P8 option (0.04% accuracy & 5-year stability)

Step 1: Determine the performance required for your application.

Required Performance:	0.30% of span

Step 2: Determine the operating conditions.

Transmitter:	3051CD, Range 2 [URL=250 inH_2O(623 mbar)]
Calibrated Span:	150 inH_2O (374 mbar)
Ambient Temperature Change:	± 50 °F (28 °C)
Line Pressure:	500 psig (34,5 bar)

Step 3: Calculate total probable error (TPE).

$$TPE = \sqrt{(ReferenceAccuracy)^2 + (TemperatureEffect)^2 + (StaticPressureEffect)^2} = 0.105\% \text{ of span}$$

Where:

Reference Accuracy = ± 0.04% of span

Ambient Temperature Effect =

$$\pm\left(\frac{0.0125 \times URL}{Span} + 0.0625\right)\% \text{ per } 50\ °F = \pm 0.0833\% \text{ of span}$$

Span Static Pressure Effect(1) =

0.1% reading per 1000 psi (69 bar) = ±0.05% of span at maximum span

(1)Zero static pressure effect removed by zero trimming at line pressure.

Step 4: Calculate the stability per month.

$$Stability = \pm\left[\frac{(0.125 \times URL)}{Span}\right]\% \text{ of span for 5 years} = \pm 0.0035\% \text{ of span per month}$$

Step 5: Calculate calibration frequency.

$$\text{Cal. Freq.} = \frac{(\text{Req. Performance} - TPE)}{\text{Stability per Month}} = \frac{(0.3\% - 0.105\%)}{0.0035\%} = 27 \text{ months}$$

4.3.2 Choosing a trim procedure

To decide which trim procedure to use, you must first determine whether the analog-to-digital section or the digital-to-analog section of the transmitter electronics need calibration. Refer to Figure 4-1 and perform the following procedure:

1. Connect a pressure source, a Field Communicator or AMS, and a digital readout device to the transmitter.
2. Establish communication between the transmitter and the Field Communicator.
3. Apply pressure equal to the upper range point pressure.
4. Compare the applied pressure to the pressure process variable valve on the Process Variables menu on the Field Communicator or the *Process Variables* screen in AMS. For instructions on how to access process variables, see page 51 of Section 3: Configuration.

a. If the pressure reading does not match the applied pressure (with high-accuracy test equipment), perform a sensor trim. See "Sensor trim overview" on page 81 to determine which trim to perform.

5. Compare the Analog Output (AO) line, on the Field Communicator or AMS, to the digital readout device.

If the AO reading does not match the digital readout device (with high-accuracy test equipment), perform an analog output trim. See "Analog output trim" on page 77.

4.4 Analog output trim

The Analog Output Trim commands allow you to adjust the transmitter's current output at the 4 and 20 mA (1 and 5 Vdc) points to match the plant standards. This command adjusts the digital to analog signal conversion.

Figure 4-2. Output trim

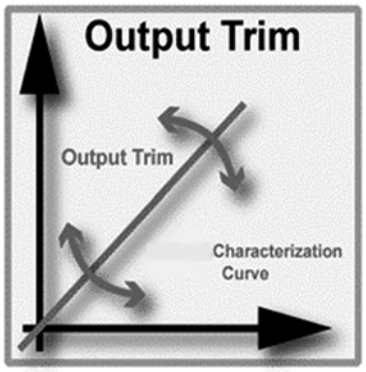

4.4.1 Digital-to-Analog trim

Field communicator

Traditional 4-20 mA Fast Keys	1, 2, 3, 2, 1
Traditional 1-5 Vdc Fast Keys	1, 2, 3, 2, 1
Device Dashboard Fast Keys	3, 4, 2

To perform a digital-to-analog trim with a Field Communicator, perform the following procedure.

1. From the *HOME* screen, enter the fast key sequence “Digital-to-Analog Trim.” Select OK after setting the control loop to manual, see “Setting the loop to manual” on page 40.

2. a. For 4-20 mA HART output, connect a reference meter to the transmitter by either connecting the meter to the test terminals on the terminal block, or shunting transmitter power through the meter at some point in the loop.
   b. For 1-5 Vdc Low Power HART output, connect a reference meter to the V_{out} terminal.

3. Select OK after connecting the reference meter.

4. Select OK at the SETTING FLD DEV OUTPUT TO 4 MA (1 Vdc) prompt. The transmitter outputs 4.0 mA.

5. Record the actual value from the reference meter, and enter it at the ENTER METER VALUE prompt. The Field Communicator prompts you to verify whether or not the output value equals the value on the reference meter.

6. Select 1: Yes, if the reference meter value equals the transmitter output value, or 2: No if it does not.
   a. If 1 is selected: Yes, proceed to Step 7.
   b. If 2 is selected: No, repeat Step 5.

7. Select OK at the SETTING FLD DEV OUTPUT TO 20 MA (5 Vdc) prompt, and repeat Steps 5 and 6 until the reference meter value equals the transmitter output value.

8. Select OK after the control loop is returned to automatic control.

AMS Device Manager

Right click on the device and select Calibrate, then D/A Trim from the menu.

1. Click Next after setting the control loop to manual.
2. Click Next after connecting the reference meter.
3. Click Next at the *Setting fld dev output to 4 mA (1 Vdc)* screen.
4. Record the actual value from the reference meter, and enter it at the *Enter meter value* screen and click Next.
5. Select Yes, if the reference meter value equals the transmitter output value, or No if it does not. Click Next.
   a. If Yes is selected, proceed to Step 6.
   b. If No is selected, repeat Step 4.
6. Click Next at the *Setting fld dev output to 20 mA (5 Vdc)* screen.
7. Repeat Step 4 - Step 5 until the reference meter equals the transmitter output value.
8. Select Next to acknowledge the loop can be returned to automatic control.
9. Select Finish to acknowledge the method is complete.

4.4.2 Digital-to-Analog trim using other scale

The Scaled D/A Trim command matches the 4 and 20 mA (1 and 5 Vdc) points to a user selectable reference scale other than 4 and 20 mA (for example, 2 to 10 volts if measuring across a 500 ohm load, or 0 to 100 percent if measuring from a Distributed Control System (DCS)). To perform a scaled D/A trim, connect an accurate reference meter to the transmitter and trim the output signal to scale, as outlined in the Output Trim procedure.

Note
Use a precision resistor for optimum accuracy. If you add a resistor to the loop, ensure that the power supply is sufficient to power the transmitter to a 20 mA output with additional loop resistance. Refer to "Power supply for 4-20 mA HART" on page 25.

Field communicator

Traditional 4-20 mA Fast Keys	1, 2, 3, 2, 2
Traditional 1-5 Vdc Fast Keys	1, 2, 3, 2, 2
Device Dashboard Fast Keys	3, 4, 2

AMS Device Manager

Right click on the device and select Calibrate, then Scaled D/A trim from the menu.

1. Click Next after setting the control loop to manual.
2. Select Change to change scale, click Next.
3. Enter Set scale-Lo output value, click Next.
4. Enter Set scale-Hi output value, click Next.
5. Click Next to proceed with Trim.
6. Click Next after connecting the reference meter.
7. Click Next at the *Setting fld dev output to 4 mA* screen.
8. Record the actual value from the reference meter, and enter it at the *Enter meter value* screen and click Next.
9. Select Yes, if the reference meter value equals the transmitter output value, or No if it does not. Click Next.
   a. If Yes is selected, proceed to Step 10.
   b. If No is selected, repeat Step 8.
10. Click Next at the *Setting fld dev output to 20 mA* screen.
11. Repeat Step 8 - Step 9 until the reference meter equals the transmitter output value.
12. Select Next to acknowledge the loop can be returned to automatic control.
13. Select Finish to acknowledge the method is complete.

4.4.3 Recall factory trim—analog output

The Recall Factory Trim—Analog Output command allows the restoration of the as-shipped factory settings of the analog output trim. This command can be useful for recovering from an inadvertent trim, incorrect Plant Standard or faulty meter. This command is only available with 4-20 mA output.

Field communicator

Traditional 4-20 mA Fast Keys	1, 2, 3, 4, 2
Device Dashboard Fast Keys	3, 4, 3

AMS Device Manager

Right click on the device and select Calibrate, then Recall Factory Trim from the menu.

1. Click Next after setting the control loop to manual.
2. Select Analog output trim under *Trim to recall* and click Next.
3. Click Next to acknowledge restoration of trim values is complete.
4. Select Next to acknowledge the loop can be returned to automatic control.
5. Select Finish to acknowledge the method is complete.

4.5 Sensor trim

4.5.1 Sensor trim overview

Trim the sensor using either sensor or zero trim functions. Trim functions vary in complexity and are application-dependent. Both trim functions alter the transmitter's interpretation of the input signal.

Zero trim is a single-point offset adjustment. It is useful for compensating for mounting position effects and is most effective when performed with the transmitter installed in its final mounting position. Since this correction maintains the slope of the characterization curve, it should not be used in place of a sensor trim over the full sensor range.

When performing a zero trim, ensure that the equalizing valve is open and all wet legs are filled to the correct levels.

Note
Do not perform a zero trim on Rosemount 3051T Absolute pressure transmitters. Zero trim is zero based, and absolute pressure transmitters reference absolute zero. To correct mounting position effects on a 3051T Absolute Pressure Transmitter, perform a low trim within the sensor trim function. The low trim function provides an offset correction similar to the zero trim function, but it does not require zero-based input.

Sensor trim is a two-point sensor calibration where two end-point pressures are applied, and all output is linearized between them. Always adjust the low trim value first to establish the correct offset. Adjustment of the high trim value provides a slope correction to the characterization curve based on the low trim value. The trim values allow you to optimize performance over your specified measuring range at the calibration temperature.

Figure 4-3. Sensor trim

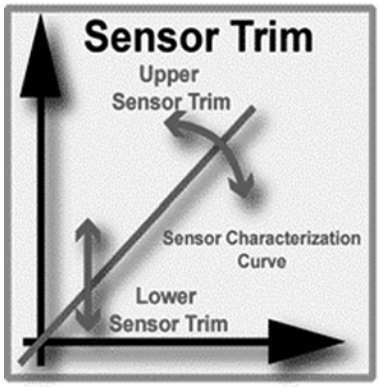

4.5.2 Zero trim

Note
The transmitter PV at zero pressure must be within three percent of URL in order to calibrate using the zero trim function.

Field communicator

Traditional 4-20 mA Fast Keys	1, 2, 3, 3, 1
Traditional 1-5 Vdc Fast Keys	1, 2, 3, 3, 1
Device Dashboard Fast Keys	3, 4, 1, 3

Calibrate the sensor with a Field Communicator using the zero trim function as follows:

1. Vent the transmitter and attach a Field Communicator to the measurement loop.
2. From the *HOME* screen, follow the fast key sequence “Zero Trim.”
3. Follow the commands provided by the Field Communicator to complete the zero trim adjustment.

AMS Device Manager

Right click on the device and select Calibrate, then Zero trim from the menu.

1. Click Next after setting the control loop to manual.
2. Click Next to acknowledge warning.
3. Click Next after applying appropriate pressure to sensor.
4. Select Next to acknowledge the loop can be returned to automatic control.
5. Select Finish to acknowledge the method is complete.

4.5.3 Sensor trim

Note
Use a pressure input source that is at least four times more accurate than the transmitter, and allow the input pressure to stabilize for ten seconds before entering any values.

Field communicator

Traditional 4-20 mA Fast Keys	1, 2, 3, 3
Traditional 1-5 Vdc Fast Keys	1, 2, 3, 3
Device Dashboard Fast Keys	3, 4, 1

To calibrate the sensor with a Field Communicator using the sensor trim function, perform the following procedure:

1. Assemble and power the entire calibration system including a transmitter, Field Communicator, power supply, pressure input source, and readout device.
2. From the *HOME* screen, enter the fast key sequence under "Sensor Trim."
3. Select 2: Lower sensor trim. The lower sensor trim value should be the sensor trim point that is closest to zero.

Examples:

Calibration: 0 to 100" H_2O - lower trim = 0, upper trim = 100

Calibration: -100 to 0" H_2O - lower trim = 0, upper trim = -100

Calibration: -100 to 100" H_2O - lower trim = -100 or 100,
upper trim = -100 or 100

Note
Select pressure input values so that lower and upper values are equal to or outside the 4 and 20 mA (1 and 5 Vdc) points. Do not attempt to obtain reverse output by reversing the high and low points. This can be done by going to "Rerange" on page 53 of Section 3: Configuration. The transmitter allows approximately five percent deviation.

4. Follow the commands provided by the Field Communicator to complete the adjustment of the lower value.
5. Repeat the procedure for the upper value, replacing 2: Lower sensor trim with 3: Upper sensor trim in Step 3.

AMS Device Manager

Right click on the device and select Calibrate, then Sensor trim" from the menu.

1. Select Lower sensor trim. The lower sensor trim value should be the sensor trim point that is closest to zero.
2. Click Next after setting the control loop to manual.
3. Click Next after applying appropriate pressure to sensor.
4. Select Next to acknowledge the loop can be returned to automatic control.
5. Select Finish to acknowledge the method is complete.
6. Right click on the device and select Calibrate, select Sensor trim from the menu.
7. Select Upper sensor trim and repeat steps 5.

4.5.4 Recall factory trim—sensor trim

The Recall Factory Trim—Sensor Trim command allows the restoration of the as-shipped factory settings of the sensor trim. This command can be useful for recovering from an inadvertent zero trim of an absolute pressure unit or inaccurate pressure source. This command is only available with 4-20 mA output.

Field communicator

4-20 mA Fast Keys	1, 2, 3, 4, 1
Device Dashboard Fast Keys	3, 4, 3

AMS Device Manager

Right click on the device and select Calibrate, then Recall Factory Trim from the menu.

1. Click Next after setting the control loop to manual.
2. Select "Sensor trim" under *Trim to recall* and click Next.
3. Click Next to acknowledge restoration of trim values is complete.
4. Select Next to acknowledge the loop can be returned to automatic control.
5. Select Finish to acknowledge the method is complete.

4.5.5 Line pressure effect (range 2 and range 3)

The following specifications show the static pressure effect for the Rosemount 3051 Range 2 and Range 3 pressure transmitters used in differential pressure applications where line pressure exceeds 2000 psi (138 bar).

Zero effect

± 0.1% of the upper range limit plus an additional ± 0.1% of upper range limit error for each 1000 psi (69 bar) of line pressure above 2000 psi (138 bar).

Example: Line pressure is 3000 psi (207 bar) for Ultra performance transmitter. Zero effect error calculation:

± {0.05 + 0.1 x [3 kpsi - 2 kpsi]} = ± 0.15% of the upper range limit

Span effect

Refer to "Line Pressure Effect" on page 105.

4.5.6 Compensating for line pressure

Rosemount 3051 Range 4 and 5 pressure transmitters require a special calibration procedure when used in differential pressure applications. The purpose of this procedure is to optimize transmitter performance by reducing the effect of static line pressure in these applications. The 3051 differential pressure transmitters (Ranges 1, 2, and 3) do not require this procedure because optimization occurs in the sensor.

Applying high static pressure to 3051 Range 4 and Range 5 pressure transmitters causes a systematic shift in the output. This shift is linear with static pressure; correct it by performing the Sensor Trim procedure on page 83.

The following specifications show the static pressure effect for 3051 Range 4 and Range 5 transmitters used in differential pressure applications:

Zero Effect:

± 0.1% of the upper range limit per 1000 psi (69 bar) for line pressures from 0 to 2000 psi (0 to 138 bar)

For line pressures above 2000 psi (138 bar), the zero effect error is ± 0.2% of the upper range limit plus an additional ± 0.2% of upper range limit error for each 1000 psi (69 bar) of line pressure above 2000 psi (138 bar).

Example: Line pressure is 3000 psi (3 kpsi). Zero effect error calculation:

± {0.2 + 0.2 x [3 kpsi - 2 kpsi]} = ± 0.4% of the upper range limit

Span Effect:

Correctable to ±0.2% of reading per 1000 psi (69 bar) for line pressures from 0 to 3626 psi (0 to 250 bar)

The systematic span shift caused by the application of static line pressure is -1.00% of reading per 1000 psi (69 bar) for Range 4 transmitters, and -1.25% of reading per 1000 psi (69 bar) for Range 5 transmitters.

Use the following example to compute corrected input values.

Example

A Range 4 transmitter with model number 3051_CD4 will be used in a differential pressure application where the static line pressure is 1200 psi (83 bar). The transmitter output is ranged with 4 mA at 500 inH_2O (1,2 bar) and 20 mA at 1500 inH_2O (3,7 bar).

To correct for systematic error caused by high static line pressure, first use the following formulas to determine corrected values for the low trim and high trim.

Low Trim Value

LT = LRV - (S/100 x P/1000 x LRV)

Where:	LT =	Corrected Low Trim Value
	LRV =	Lower Range Value
	S =	Span shift per specification (as a percent of reading)
	P =	Static Line Pressure in psi

In this example:

LRV =	500 inH_2O (1.24 bar)
S =	-1.00%
P =	1200 psi
LT =	500 inH_2O - (-1%/100 x 1200 psi/1000 x 500 inH_2O)
LT =	506 inH_2O

High Trim Value

HT = (URV - (S/100 x P/1000 x URV)

Where:	HT =	Corrected High Trim Value
	URV =	Upper Range Value
	S =	Span shift per specification (as a percent of reading)
	P =	Static Line Pressure in psi

In this example:

URV =	1500 inH_2O (3.74 bar)
S =	-1.00%
P =	1200 psi
HT =	1500 - (-1%/100 x 1200 psi/1000 x 1500 inH_2O)
HT =	1518 inH_2O

Complete the Sensor Trim procedure as described on page 83. In the example above, at step 4, apply the nominal pressure value of 500 inH_2O. However, enter the calculated correct lower trim (LT) value of 506 inH_2O with the Field Communicator. Repeat the procedure for the upper value.

Note
The range values for the 4 and 20 mA (1 and 5 Vdc) points should be at the nominal URV and LRV. In the example above, the values are 1500 inH_2O and 500 inH_2O respectively. Confirm the values on the *HOME* screen on the Field Communicator. Modify, if needed, by following the steps in the Rerange section on page 53.

Section 5 Troubleshooting

Overview . . . . . page 89
Safety messages . . . . . page 89
Diagnostic messages . . . . . page 92
Disassembly procedures . . . . . page 97
Reassembly procedures . . . . . page 100

5.1 Overview

Table 5-1 provides summarized maintenance and troubleshooting suggestions for the most common operating problems.

If you suspect malfunction despite the absence of any diagnostic messages on the Field Communicator display, consider using Table 5-1 on page 5-91 to identify any potential problem.

5.2 Safety messages

Procedures and instructions in this section may require special precautions to ensure the safety of the personnel performing the operations. Information that raises potential safety issues is indicated by a warning symbol (⚠). Refer to the following safety messages before performing an operation preceded by this symbol.

5.2.1 Warnings (⚠)

⚠ WARNING

Explosions could result in death or serious injury:

Installation of this transmitter in an explosive environment must be in accordance with the appropriate local, national, and international standards, codes, and practices. Please review the approvals section of the 3051 reference manual for any restrictions associated with a safe installation.

- Before connecting a Field Communicator in an explosive atmosphere, ensure the instruments in the loop are installed in accordance with intrinsically safe or non-incendive field wiring practices.
- In an Explosion-Proof/Flameproof installation, do not remove the transmitter covers when power is applied to the unit.

Process leaks may cause harm or result in death.

- Install and tighten process connectors before applying pressure.

Electrical shock can result in death or serious injury.

- Avoid contact with the leads and terminals. High voltage that may be present on leads can cause electrical shock.

Table 5-1. Rosemount 3051 troubleshooting table for 4-20 mA output

Symptom	Corrective actions
Transmitter milliamp reading is zero	Verify power is applied to signal terminals
	Check power wires for reversed polarity
	Verify terminal voltage is 10.5 to 42.4 Vdc
	Check for open diode across test terminal
Transmitter Not Communicating with Field Communicator	Verify the output is between 4 and 20 mA or saturation levels
	Verify terminal voltage is 10.5 to 42.4 Vdc
	Verify clean DC Power to transmitter (Max AC noise 0.2 volts peak to peak)
	Check loop resistance, 250 Ω minimum (PS voltage -transmitter voltage/loop current)
	Have Field Communicator poll for all addresses
Transmitter milliamp reading is low or high	Verify applied pressure
	Verify 4 and 20 mA range points
	Verify output is not in alarm condition
	Verify if 4 – 20 mA output trim is required
Transmitter will not respond to changes in applied pressure	Check test equipment
	Check impulse piping or manifold for blockage
	Verify the transmitter is not in multidrop mode
	Verify applied pressure is between the 4 and 20 mA set points
	Verify output is not in alarm condition
	Verify transmitter is not in Loop Test mode
Digital Pressure Variable reading is low or high	Check test equipment (verify accuracy)
	Check impulse piping for blockage or low fill in wet leg
	Verify transmitter is calibrated properly
	Verify pressure calculations for application
Digital Pressure Variable reading is erratic	Check application for faulty equipment in pressure line
	Verify transmitter is not reacting directly to equipment turning on/off
	Verify damping is set properly for application
Milliamp reading is erratic	Verify power source to transmitter has adequate voltage and current
	Check for external electrical interference
	Verify transmitter is properly grounded
	Verify shield for twisted pair is only grounded at one end

5.3 Diagnostic messages

In addition to the output, the LCD meter displays abbreviated operation, error, and warning messages for troubleshooting the transmitter. Messages appear according to their priority, with normal operating messages appearing last. To determine the cause of a message, use a Field Communicator or AMS to further interrogate the transmitter. A description of each LCD diagnostic message follows.

Error

Error messages appear on the LCD display to inform you of serious problems affecting the operation of the transmitter. The LCD displays an error message until the error condition is corrected, and the analog output is driven to the specified alarm level. No other transmitter information is displayed during an alarm condition.

Fail

The transmitter CPU board and the sensor module are incompatible. See “Disassembly procedures” on page 97.

Fail Module

The sensor module is disconnected or is malfunctioning. Verify that the sensor module ribbon cable is connected to the back of the electronics board. If the ribbon cable is properly connected, there is a problem within the sensor module. Possible sources of problems include:

- Pressure or temperature updates are not being received in the sensor module.
- A non-volatile memory fault that will effect transmitter operation has been detected in the module by the memory verification routine.

Some non-volatile memory faults are user-repairable. Use a Field Communicator to diagnose the error and determine if it is repairable. Any error message that ends in “FACTORY” is not repairable. In cases of non user-repairable errors, you must replace the transmitter.

Fail Elect

The transmitter electronics board is malfunctioning due to an internal fault. Some of the FAIL ELECT errors are user-repairable. Use a 275 Field Communicator to diagnose the error and determine if it is repairable. Any error message that ends in “FACTORY” is not repairable. In cases of non user-repairable errors, you must replace the electronics board. See “Disassembly procedures” on page 97.

Fail Config

A memory fault has been detected in a location that could affect transmitter operation, and is user-accessible. To correct this problem, use a Field Communicator to interrogate and reconfigure the appropriate portion of the transmitter memory.

Warnings

Warnings appear on the LCD display to alert you of user-repairable problems with the transmitter, or current transmitter operations. Warnings appear alternately with other transmitter information until the warning condition is corrected or the transmitter completes the operation that warrants the warning message.

Press Limit

The process variable read by the transmitter is outside of the transmitter's range.

Temp Limit

The secondary temperature variable read by the transmitter is outside of the transmitter's range.

Curr Fixed

The transmitter is in multidrop mode. The analog output is not tracking pressure changes.

Curr Saturd

The pressure read by the module is outside of the specified range, and the analog output has been driven to saturation levels.

Loop Test

A loop test is in progress. During a loop test or 4–20 mA trim, the analog output is set to a fixed value. The meter display alternates between the current selected in milliamps and "LOOP TEST."

Xmtr Info

A non-volatile memory fault has been detected in the transmitter memory by the memory verification routine. The memory fault is in a location containing transmitter information. To correct this problem, use a Field Communicator to interrogate and reconfigure the appropriate portion of the transmitter memory. This warning does not effect the transmitter operation.

Operation

Normal operation messages appear on the LCD meter to confirm actions or inform you of transmitter status. Operation messages are displayed with other transmitter information, and warrant no action to correct or alter the transmitter settings.

Zero Pass

The zero value, set with the local zero adjustment button, has been accepted by the transmitter, and the output should change to 4 mA
(1 Vdc).

Zero Fail

The zero value, set with the local zero adjustment button, exceeds the maximum rangedown allowed for a particular range, or the pressure sensed by the transmitter exceeds the sensor limits.

Span Pass

The span value, set with the local span adjustment button, has been accepted by the transmitter, and the output should change to 20 mA
(5 Vdc).

Span Fail

The span value, set with the local span adjustment button, exceeds the maximum rangedown allowed for a particular range, or the pressure sensed by the transmitter exceeds the sensor limits.

Local Dsbld

This message appears during reranging with the integral zero and span buttons and indicates that the transmitter local zero and span adjustments have been disabled. The adjustments may have been disabled by the transmitter security jumper on the transmitter circuit board or through software commands from the Field Communicator. See "Security (write protect)" on page 20 for information on the position of the security jumper and information on software lockout.

Write Protect

This message appears if you attempt to change the transmitter configuration data while the security jumper is in the ON position. See "Security (write protect)" on page 20 for more information about the security jumper.

Field communicator diagnostics

Table 5-2 is a list of messages used by the Field Communicator (HC) and their corresponding descriptions.

Variable parameters within the text of a message are indicated with <*variable parameter*>.

Reference to the name of another message is identified by *[another message]*.

Table 5-2. Field communicator messages

Message	Description
1k snsr EEPROM error-factory ON	Replace the transmitter
1k snsr EEPROM error-user-no out ON	Use the Field Communicator to reset the following parameters: remote seal isolator, remote seal fill fluid, flange material, o-ring material, transmitter type, remote seal type, flange type, meter type, number of remote seals.
1k snsr EEPROM error-user ON	Perform a full trim to recalibrate the transmitter.
4k micro EEPROM error-factory ON	Replace the electronics board.
4k micro EEPROM error-user-no out ON	Use the Field Communicator to reset the message field.
4k micro EEPROM error-user ON	Use the Field Communicator to reset the following parameters: units, range values, damping, analog output, transfer function, tag, scaled meter values. Perform a D/A trim to ensure that the error is corrected.

Message	Description
4k snsr EEPROM error-factory ON	Replace the transmitter.
4k snsr EEPROM error-user ON	Use the Field Communicator to reset the temperature units and the calibration type.
Add item for ALL device types or only for this ONE device type.	Asks the user whether the hot key item being added should be added for all device types or only for the type of device that is connected.
Command Not Implemented	The connected device does not support this function.
Communication Error	The communicator and the device are not communicating correctly. Check all connections between the Field Communicator and the device and resend the information.
Configuration memory not compatible with connected device	The configuration stored in memory is incompatible with the device to which a transfer has been requested.
CPU board not initialized ON	The electronics board is not initialized. Replace the electronics board.
CPU EEPROM write failure ON	Message sent to electronics board from HART signal failed. Replace the electronics board.
Device Busy	The connected device is busy performing another task.
Device Disconnected	The device failed to respond to a command. Check all connections between the Field Communicator and the device and resend the command.
Device write protected	Device is in write-protect mode. Data can not be written.
Device write protected. Do you still want to shut off?	Device is in write-protect mode. Press YES to turn the Field Communicator off and lose the unsent data.
Display value of variable on hotkey menu?	Asks whether the value of the variable should be displayed adjacent to its label on the hotkey menu if the item being added to the hotkey menu is a variable.
Download data from configuration memory to device	Press the SEND softkey to transfer information from the communicator memory to the device.
Exceed field width	Indicates that the field width for the current arithmetic variable exceeds the device-specified description edit format.
Exceed precision	Indicates that the precision for the current arithmetic variable exceeds the device-specified description edit format.
Ignore next 50 occurrences of status?	Select YES to ignore the next 50 occurrences of device status, or select no to display every occurrence.
Illegal character	An invalid character for the variable type was entered.
Illegal date	The day portion of the date is invalid.
Illegal month	The month portion of the date is invalid.
Illegal year	The year portion of the date is invalid.
Incompatible CPU board and module ON	Upgrade the electronics board or the sensor module to the current revision.
Incomplete exponent	The exponent of a scientific notation floating point variable is incomplete.
Incomplete field	The value entered is not complete for the variable type.

Message	Description
Looking for a device	Polling for multidropped devices at addresses 1–15.
Local buttons operator error ON	Illegal pressure applied during zero or span operation. Repeat the process after verifying the correct pressures.
Mark as read only variable on hotkey menu?	Asks whether the user should be allowed to edit the variable from the hotkey menu if the item being added to the hotkey menu is a variable.
Module EEPROM write failure ON	Message sent to the module from the HART signal failed. Replace the transmitter.
No device configuration in configuration memory	There is no configuration saved in memory available to re-configure off-line or transfer to a device.
No Device Found	Poll of address zero fails to find a device, or poll of all addresses fails to find a device if auto-poll is enabled.
No hotkey menu available for this device.	There is no menu named “hotkey” defined in the device description for this device.
No pressure updates ON	No pressure updates being received from the sensor module. Verify that the sensor module ribbon cable is attached correctly. Or replace the transmitter.
No offline devices available.	There are no device descriptions available to be used to configure a device offline.
No simulation devices available.	There are no device descriptions available to simulate a device.
No temperature updates ON	No temperature updates being received from the sensor module. Verify that the sensor module ribbon cable is attached correctly. Or replace the transmitter.
No UPLOAD_VARIABLES in ddl for this device	There is no menu named “upload_variables” defined in the device description for this device. This menu is required for offline configuration.
No Valid Items	The selected menu or edit display contains no valid items.
OFF KEY DISABLED	Appears when the user attempts to turn the HC off before sending modified data or before completing a method.
Online device disconnected with unsent data. RETRY or OK to lose data.	There is unsent data for a previously connected device. Press RETRY to send data, or press OK to disconnect and lose unsent data.
Out of memory for hotkey configuration. Delete unnecessary items.	There is no more memory available to store additional hotkey items. Unnecessary items should be deleted to make space available.
Overwrite existing configuration memory	Requests permission to overwrite existing configuration either by a device-to-memory transfer or by an offline configuration. User answers using the softkeys.
Press OK...	Press the OK softkey. This message usually appears after an error message from the application or as a result of HART communications.
Restore device value?	The edited value that was sent to a device was not properly implemented. Restoring the device value returns the variable to its original value.
ROM checksum error ON	Checksum of transmitter software has detected a fault. Replace the electronics board.
Save data from device to configuration memory	Prompts user to press SAVE softkey to initiate a device-to-memory transfer.

Message	Description
Saving data to configuration memory.	Data is being transferred from a device to configuration memory.
Sending data to device.	Data is being transferred from configuration memory to a device.
Sensor board not initialized ON	The sensor module electronics board is not initialized. Replace the transmitter.
There are write only variables which have not been edited. Please edit them.	There are write-only variables which have not been set by the user. These variables should be set or invalid values may be sent to the device.
There is unsent data. Send it before shutting off?	Press YES to send unsent data and turn the HC off. Press NO to turn the HC off and lose the unsent data.
Too few data bytes received	Command returns fewer data bytes than expected as determined by the device description.
Transmitter Fault	Device returns a command response indicating a fault with the connected device.
Units for <variable label> has changed. Unit must be sent before editing, or invalid data will be sent.	The engineering units for this variable have been edited. Send engineering units to the device before editing this variable.
Unsent data to online device. SEND or LOSE data	There is unsent data for a previously connected device which must be sent or thrown away before connecting to another device.
Upgrade 275 software to access XMTR function. Continue with old description?	The communicator does not contain the most recent 3051 Device Descriptors (DDs). Select YES to communicate using the existing DDs. Select NO to abort communication.
Use up/down arrows to change contrast. Press DONE when done.	Gives direction to change the contrast of the HC display.
Value out of range	The user-entered value is either not within the range for the given type and size of variable or not within the min/max specified by the device.
<message> occurred reading/writing <variable label>	Either a read/write command indicates too few data bytes received, transmitter fault, invalid response code, invalid response command, invalid reply data field, or failed pre- or post-read method; or a response code of any class other than SUCCESS is returned reading a particular variable.
<variable label> has an unknown value. Unit must be sent before editing, or invalid data will be sent.	A variable related to this variable has been edited. Send related variable to the device before editing this variable.

5.4 Disassembly procedures

⚠ Do not remove the instrument cover in explosive atmospheres when the circuit is live.

5.4.1 Remove from service

Follow these steps:

- Follow all plant safety rules and procedures.
- Isolate and vent the process from the transmitter before removing the transmitter from service.
- Remove all electrical leads and disconnect conduit.
- Remove the transmitter from the process connection.
- The Rosemount 3051C transmitter is attached to the process connection by four bolts and two cap screws. Remove the bolts and separate the transmitter from the process connection. Leave the process connection in place and ready for re-installation.
- The Rosemount 3051T transmitter is attached to the process by a single hex nut process connection. Loosen the hex nut to separate the transmitter from the process. Do not wrench on neck of transmitter.
- Do not scratch, puncture, or depress the isolating diaphragms.
- Clean isolating diaphragms with a soft rag and a mild cleaning solution, and rinse with clear water.
- For the 3051C, whenever you remove the process flange or flange adapters, visually inspect the PTFE o-rings. Replace the o-rings if they show any signs of damage, such as nicks or cuts. Undamaged o-rings may be reused.

5.4.2 Remove terminal block

Electrical connections are located on the terminal block in the compartment labeled "FIELD TERMINALS."

1. Remove the housing cover from the field terminal side.
2. Loosen the two small screws located on the assembly in the 9 o'clock and 5 o'clock positions.
3. Pull the entire terminal block out to remove it.

5.4.3 Remove the electronics board

The transmitter electronics board is located in the compartment opposite the terminal side. To remove the electronics board perform the following procedure:

1. Remove the housing cover opposite the field terminal side.
2. If you are disassembling a transmitter with a LCD display, loosen the two captive screws that are visible on the right and left side of the meter display.
3. ⚠ Loosen the two captive screws that anchor the board to the housing. The electronics board is electrostatically sensitive; observe handling precautions for static-sensitive components. Use caution when removing the LCD as there is an electronic pin connector that interfaces between the LCD and electronics board. The two screws anchor the LCD display to the electronics board and the electronics board to the housing.
4. Using the two captive screws, slowly pull the electronics board out of the housing. The sensor module ribbon cable holds the electronics board to the housing. Disengage the ribbon cable by pushing the connector release.

5.4.4 Remove the sensor module from the electronics housing

1. Remove the electronics board. Refer to "Remove the electronics board" on page 99.

Important
To prevent damage to the sensor module ribbon cable, disconnect it from the electronics board before you remove the sensor module from the electrical housing.

2. Carefully tuck the cable connector completely inside of the internal black cap.

⚠ See "Safety messages" on page 89 for complete warning

Note
Do not remove the housing until after you tuck the cable connector completely inside of the internal black cap. The black cap protects the ribbon cable from damage that can occur when you rotate the housing.

3. Loosen the housing rotation set screw with a $^{5}/_{64}$-inch hex wrench, and loosen one full turn.
4. Unscrew the module from the housing, making sure the black cap and sensor cable do not catch on the housing.

5.5 Reassembly procedures

1. Inspect all cover and housing (non-process wetted) O-rings and replace if necessary. Lightly grease with silicone lubricant to ensure a good seal.
2. Carefully tuck the cable connector completely inside the internal black cap. To do so, turn the black cap and cable counterclockwise one rotation to tighten the cable.
3. Lower the electronics housing onto the module. Guide the internal black cap and cable through the housing and into the external black cap.
4. Turn the module clockwise into the housing.

Important
Make sure the sensor ribbon cable and internal black cap remain completely free of the housing as you rotate it. Damage can occur to the cable if the internal black cap and ribbon cable become hung up and rotate with the housing.

⚠ 5. Thread the housing completely onto the sensor module. The housing must be no more than one full turn from flush with the sensor module to comply with explosion proof requirements.
6. Tighten the housing rotation set screw using a $^{5}/_{64}$-inch hex wrench.

5.5.1 Attach the electronics board

1. Remove the cable connector from its position inside of the internal black cap and attach it to the electronics board.
2. Using the two captive screws as handles, insert the electronics board into the housing. Make sure the posts from the electronics housing properly engage the receptacles on the electronics board. Do not force. The electronics board should slide gently on the connections.
3. Tighten the captive mounting screws.

⚠ 4. Replace the electronics housing cover. The transmitter covers must be engaged metal-to-metal to ensure a proper seal and to meet Explosion-Proof requirements.

⚠ See “Safety messages” on page 89 for complete warning

5.5.2 Install the terminal block

1. Gently slide the terminal block into place, making sure the two posts from the electronics housing properly engage the receptacles on the terminal block.
2. Tighten the captive screws.
3. Replace the electronics housing cover. The transmitter covers must be fully engaged to meet Explosion-Proof requirements.

5.5.3 Reassemble the 3051C process flange

1. Inspect the sensor module PTFE o-rings. Undamaged o-rings may be reused. Replace o-rings that show any signs of damage, such as nicks, cuts, or general wear.

Note
If you are replacing the o-rings, be careful not to scratch the o-ring grooves or the surface of the isolating diaphragm when removing the damaged o-rings.

2. Install the process connection. Possible options include:
   a. Coplanar Process Flange:
      – Hold the process flange in place by installing the two alignment screws to finger tightness (screws are not pressure retaining). Do not overtighten as this will affect module-to-flange alignment.
      – Install the four 1.75-in. flange bolts by finger tightening them to the flange.
   b. Coplanar Process Flange with Flange Adapters:
      – Hold the process flange in place by installing the two alignment screws to finger tightness (screws are not pressure retaining). Do not overtighten as this will affect module-to-flange alignment.
      – Hold the flange adapters and adapter o-rings in place while installing the four configurations, use four 2.88-in. bolts. For gage pressure configurations, use two 2.88-in. bolts and two 1.75-in. bolts.
   c. Manifold:
      – Contact the manifold manufacturer for the appropriate bolts and procedures.
3. Tighten the bolts to the initial torque value using a crossed pattern. See Table 5-3 for appropriate torque values.

Table 5-3. Bolt installation torque values

Bolt material	Initial torque value	Final torque value
CS-ASTM-A445 Standard	300 in-lb. (34 N-m)	650 in-lb. (73 N-m)
316 SST—Option L4	150 in-lb. (17 N-m)	300 in-lb. (34 N-m)
ASTM-A-19 B7M—Option L5	300 in-lb. (34 N-m)	650 in-lb. (73 N-m)
ASTM-A-193 Class 2, Grade B8M—Option L8	150 in.-lb (17 N-m)	300 in.-lb (34 N-m)

Note
If you replaced the PTFE sensor module o-rings, re-torque the flange bolts after installation to compensate for cold flow.

Note
After replacing o-rings on Range 1 transmitters and re-installing the process flange, expose the transmitter to a temperature of 185 °F (85 °C) for two hours. Then re-tighten the flange bolts in a cross pattern, and again expose the transmitter to a temperature of 185 °F (85 °C) for two hours before calibration.

5.5.4 Install the drain/vent valve

1. Apply sealing tape to the threads on the seat. Starting at the base of the valve with the threaded end pointing toward the installer, apply two clockwise turns of sealing tape.
2. Tighten the drain/vent valve to 250 in-lb. (28.25 N-m).
3. Take care to place the opening on the valve so that process fluid will drain toward the ground and away from human contact when the valve is opened.

Appendix A Specifications and reference data

Performance specifications . . . . . **page 103**
Functional specifications . . . . . **page 108**
Physical specifications . . . . . **page 116**
Dimensional Drawings . . . . . **page 120**
Ordering Information . . . . . **page 131**
Options . . . . . **page 156**
Spare parts . . . . . **page 164**

A.1 Performance specifications

This product data sheet covers both HART and fieldbus protocols unless specified.

A.1.1 Conformance to specification (±3σ (Sigma))

Technology leadership, advanced manufacturing techniques and statistical process control ensure specification conformance to at least ±3σ.

A.1.2 Reference accuracy[1]

Models[1]	Standard	High Accuracy Option
3051CD, 3051CG Range 0 (CD)	±0.10% of span For spans less than 2:1, accuracy = ±0.05% of URL	
Range 1	±0.10% of span For spans less than 15:1, accuracy = $\pm\left[0.025 + 0.005\left(\frac{URL}{Span}\right)\right]$% of Span	
Ranges 2-5	±0.065% of span For spans less than 10:1, accuracy = $\pm\left[0.015 + 0.005\left(\frac{URL}{Span}\right)\right]$% of Span	Ranges 2-4 High Accuracy Option, P8 ±0.04% of span For spans less than 5:1, accuracy = $\pm\left[0.015 + 0.005\left(\frac{URL}{Span}\right)\right]$% of Span
3051T Ranges 1-4	±0.065% of span For spans less than 10:1, accuracy = $\pm\left[0.0075\left(\frac{URL}{Span}\right)\right]$% of Span	Ranges 1-4 High Accuracy Option, P8 ±0.04% of span For spans less than 5:1, accuracy = $\pm\left[0.0075\left(\frac{URL}{Span}\right)\right]$% of Span
Range 5	±0.075% of span	
3051CA Ranges 1-4	±0.065% of span For spans less than 10:1, accuracy = $\pm\left[0.0075\left(\frac{URL}{Span}\right)\right]$% of Span	Ranges 2-4 High Accuracy Option, P8 ±0.04% of span For spans less than 5:1, accuracy = $\pm\left[0.0075\left(\frac{URL}{Span}\right)\right]$% of Span
3051H/3051L All Ranges	±0.075% of span For spans less than 10:1, accuracy = $\pm\left[0.025 + 0.005\left(\frac{URL}{Span}\right)\right]$% of Span	

(1) Total performance is determined by performing a root sum square calculation on reference accuracy, ambient temperature effect, and line pressure effect errors. For FOUNDATION fieldbus transmitters, use calibrated range in place of span. For zero based spans, reference conditions, silicone oil fill, SST materials, Coplanar flange (3051C) or 1/2 in. - 18 NPT (3051T) process connections, digital trim values set to equal range points.

A.1.3 Total performance

For ±50 °F (28 °C) temperature changes, up to 1000 psi (6,9 MPa) line pressure (CD only), from 1:1 to 5:1 rangedown.

Models	Total Performance
3051C Ranges 2-5	±0.15% of span
3051T Ranges 1-4	±0.15% of span

A.1.4 Long term stability

Models	Long Term Stability
3051C Ranges 2-5	±0.125% of URL for 5 years ±50 °F (28 °C) temperature changes, and up to 1000 psi (6,9 MPa) line pressure.
3051CD Low/Draft Range Ranges 0-1	±0.2% of URL for 1 year
3051T Ranges 1-4	±0.125% of URL for 5 years ±50 °F (28 °C) temperature changes, and up to 1000 psi (6,9 MPa) line pressure.
Rosemount 3051H Ranges 2-3 Ranges 4-5	 ±0.1% of URL for 1 year ±0.2% of URL for 1 year

A.1.5 Dynamic performance

	4 - 20 mA (*HART* protocol)[1]	Fieldbus protocol[3]
Total Response Time ($T_d + T_c$)[2]:		
3051C, Ranges 2-5: Range 1: Range 0: 3051T: 3051H/L:	100 ms 255 ms 700 ms 100 ms Consult factory	152 ms 307 ms 752 ms 152 ms Consult factory
Dead Time (Td)	45 ms (nominal)	97 ms
Update Rate	22 times per second	22 times per second

(1) Dead time and update rate apply to all models and ranges; analog output only
(2) Nominal total response time at 75 °F (24 °C) reference conditions.
(3) Transmitter fieldbus output only, segment macro-cycle not included.

Typical HART Transmitter Response Time

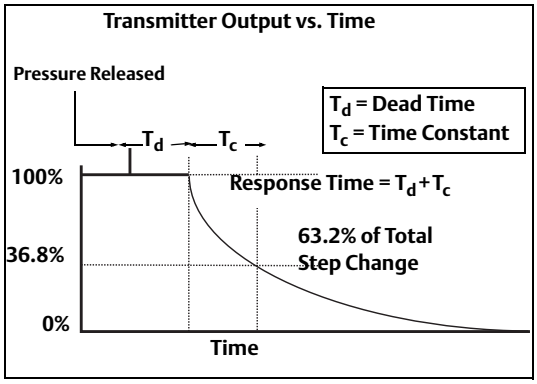

A.1.6 Line pressure effect per 1000 psi (6,9 MPa)[1]

Models[1]	Line Pressure Effect
3051CD Range 0	Zero Error[2] ±0.125% of URL/100 psi (6,89 bar)
Range 1	±0.25% of URL/1000 psi (68,9 bar)
Ranges 2-3	±0.05% of URL/1000 psi (68,9 bar) for line pressures from 0 to 2000 psi (0 to 13,7 MPa)
Range 0	Span Error ±0.15% of reading/100 psi (6,89 bar)
Range 1	±0.4% of reading/1000 psi (68,9 bar)
Ranges 2-3	±0.1% of reading/1000 psi (68,9 bar)

Models[1]	Line Pressure Effect
3051HD All Ranges	Zero Error[1] ±0.1% of URL/1000 psi (68,9 bar) for line pressures from 0 to 2000 psi (0 to 13,7 MPa)
All Ranges	Span Error ±0.1% of reading/1000 psi (68,9 bar)

(1) For zero error specifications for line pressures above 2000 psi (137,9 bar) or line pressure effect specifications for DP Ranges 4-5, see "Compensating for Line Pressure" on page 13.
(2) Can be calibrated out at line pressure.

A.1.7 Ambient temperature effect per 50 °F (28 °C)

Models	Ambient Temperature Effect
3051CD/CG Range 0	±(0.25% URL + 0.05% span)
Range 1	±(0.1% URL + 0.25% span)
Ranges 2-5	±(0.0125% URL + 0.0625% span) from 1:1 to 5:1 ±(0.025% URL + 0.125% span) from 5:1 to 100:1
3051T Range 1	±(0.025% URL + 0.125% span) from 1:1 to 10:1 ±(0.05% URL + 0.125% span) from 10:1 to 100:1
Range 2-4	±(0.025% URL + 0.125% span) from 1:1 to 30:1 ±(0.035% URL + 0.125% span) from 30:1 to 100:1
Range 5	±(0.1% URL + 0.15% span)
3051CA All Ranges	±(0.025% URL + 0.125% span) from 1:1 to 30:1
	±(0.035% URL + 0.125% span) from 30:1 to 100:1
3051H All Ranges	±(0.025% URL + 0.125% span + 0.35 inH_2O) from 1:1 to 30:1
	±(0.035% URL + 0.125% span + 0.35 inH_2O) from 1:1 to 30:1
3051L	See Rosemount Inc. Instrument Toolkit® software.

A.1.8 Mounting position effects

Models	Mounting Position Effects
3051C	Zero shifts up to ±1.25 inH_2O (3,11 mbar), which can be calibrated out. No span effect.
3051H	Zero shifts up to ±5 inH_2O (12,43 mbar), which can be calibrated out. No span effect.
3051L	With liquid level diaphragm in vertical plane, zero shift of up to 1 inH_2O (2,49 mbar). With diaphragm in horizontal plane, zero shift of up to 5 inH_2O (12,43 mbar) plus extension length on extended units. All zero shifts can be calibrated out. No span effect.
3051T/CA	Zero shifts up to 2.5 inH_2O (6,22 mbar), which can be calibrated out. No span effect.

A.1.9 Vibration effect

Less than ±0.1% of URL when tested per the requirements of IEC60770-1 field or pipeline with high vibration level (10-60 Hz 0.21mm displacement peak amplitude / 60-2000 Hz 3g).

A.1.10 Power supply effect

Less than ±0.005% of calibrated span per volt.

A.1.11 Electromagnetic compatibility (EMC)

Meets all relevant requirements of EN 61326 and NAMUR NE-21.

A.1.12 Transient protection (option code T1)

Meets IEEE C62.41, Category Location B

6 kV crest (0.5 μs - 100 kHz)
3 kV crest (8 × 20 microseconds)
6 kV crest (1.2 × 50 microseconds)

A.2 Functional specifications

A.2.1 Range and sensor limits

Table A-1. 3051CD, 3051CG, 3051L, and 3051H range and sensor limits

Range	Minimum span	
	3051CD[(1)], CG, L, H	Upper (URL)
0	0.1 inH2O (0,25 mbar)	3.0 inH2O(7,47 mbar)
1	0.5 inH2O (1,2 mbar)	25 inH2O(62,3 mbar)
2	2.5 inH2O (6,2 mbar)	250 inH2O (0,62 bar)
3	10 inH2O (24,9 mbar)	1000 inH2O (2,49 bar)
4	3 psi (0,20 bar)	300 psi (20,6 bar)
5	20 psi (1,38 bar)	2000 psi (137,9 bar)

(1) Range 0 only available with 3051CD. Range 1 only available with 3051CD or 3051CG.

Table A-2. 3051CD, 3051CG, 3051L, and 3051H range and sensor limits (cont.)

Range	Range and sensor limits					
	Lower (LRL)					
	3051C differential	3051C/ gage	3051L differential	3051L gage	3051H differential	3051H gage
0	–3.0 inH2O (-7,47 mbar)	NA	NA	NA	NA	NA
1	–25 inH2O (–62,1 mbar)	–25 inH2O (–62,1 mbar)	NA	NA	NA	NA
2	–250 inH2O (–0,62 bar)	–250 inH2O (–0,62 bar)	–250 inH2O (–0,62 bar)	–250 inH2O (–0,62 bar)	–250 inH2O (–0,62 bar)	–250 inH2O (–0,62 bar)
3	–1000 inH2O (–2,49 bar)	0.5 psia (34,5 mbar abs)	–1000 inH2O (–2,49 bar)	0.5 psia (34,5 mbar abs)	–1000 inH2O (–2,49 bar)	0.5 psia (34,5 mbar abs)
4	–300 psi (–20,6 bar)	0.5 psia (34,5 mbar abs)	–300 psi (–20,6 bar)	0.5 psia (34,5 mbar abs)	–300 psi (–20,6 bar)	0.5 psia (34,5 mbar abs)
5	– 2000 psi (–137,9 bar)	0.5 psia (34,5 mbar abs)	NA	NA	– 2000 psi (–137,9 bar)	0.5 psia (34,5 mbar abs)

Table A-3. Range and sensor limits

3051CA				3051T				
Range	Minimum span	Range and sensor limits		Range	Minimum span	Range and sensor limits		Lower[1] (LRL) (Gage)
		Upper (URL)	Lower (LRL)			Upper (URL)	Lower (LRL)	
1	0.3 psia (20,6 mbar)	30 psia (2,07 bar)	0 psia (0 bar)	1	0.3 psi (20,6 mbar)	30 psi (2,07 bar)	0 psia (0 bar)	–14.7 psig (–1,01 bar)
2	1.5 psia (0,103 bar)	150 psia (10,3 bar)	0 psia (0 bar)	2	1.5 psi (0,103 bar)	150 psi (10,3 bar)	0 psia (0 bar)	–14.7 psig (–1,01 bar)
3	8 psia (0,55 bar)	800 psia (55,2 bar)	0 psia (0 bar)	3	8 psi (0,55 bar)	800 psi (55,2 bar)	0 psia (0 bar)	–14.7 psig (–1,01 bar)
4	40 psia (2,76 bar)	4000 psia (275,8 bar)	0 psia (0 bar)	4	40 psi (2,76 bar)	4000 psi (275,8 bar)	0 psia (0 bar)	–14.7 psig (–1,01 bar)
				5	2000 psi (137,9 bar)	10000 psi (689,4 bar)	0 psia (0 bar)	–14.7 psig (–1,01 bar)

(1) Assumes atmospheric pressure of 14.7 psig.

A.2.2 Zero and Span Adjustment Requirements (*HART* and Low Power)

Zero and span values can be set anywhere within the range limits stated in Table A-1, Table A-2, and Table A-3.

Span must be greater than or equal to the minimum span stated in Table A-1, Table A-2, and Table A-3.

A.2.3 Service

Liquid, gas, and vapor applications

A.2.4 4–20 mA (Output Code A)

Output

Two-wire 4–20 mA, user-selectable for linear or square root output. Digital process variable superimposed on 4–20 mA signal, available to any host that conforms to the *HART* protocol.

Power Supply

External power supply required. Standard transmitter (4–20 mA) operates on 10.5 to 55 Vdc with no load.

Load Limitations

Maximum loop resistance is determined by the voltage level of the external power supply, as described by:

Max. Loop Resistance = 43.5 (Power Supply Voltage – 10.5)

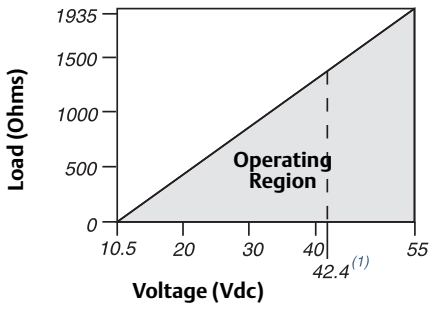

Communication requires a minimum loop resistance of 250 ohms.

(1) *For CSA approval, power supply must not exceed 42.4 V.*

A.2.5 FOUNDATION fieldbus (output code F) and Profibus (output code W)

Power Supply

External power supply required; transmitters operate on 9.0 to 32.0 Vdc transmitter terminal voltage.

Current Draw

17.5 mA for all configurations (including LCD display option)

A.2.6 FOUNDATION fieldbus function block execution times

Block	Execution Time
Resource	-
Transducer	-
LCD Block	-
Analog Input 1, 2	30 milliseconds
PID	45 milliseconds
Input Selector	30 milliseconds
Arithmetic	35 milliseconds
Signal Characterizer	40 milliseconds
Integrator	35 milliseconds

A.2.7 FOUNDATION fieldbus Parameters

Schedule Entries	7 (max.)
Links	20 (max.)
Virtual Communications Relationships (VCR)	12 (max.)

A.2.8 Standard Function Blocks

Resource Block

Contains hardware, electronics, and diagnostic information.

Transducer Block

Contains actual sensor measurement data including the sensor diagnostics and the ability to trim the pressure sensor or recall factory defaults.

LCD Block

Configures the local display.

2 Analog Input Blocks

Processes the measurements for input into other function blocks. The output value is in engineering units or custom and contains a status indicating measurement quality.

PID Block

Contains all logic to perform PID control in the field including cascade and feedforward.

A.2.9 Backup Link Active Scheduler (LAS)

The transmitter can function as a Link Active Scheduler if the current link master device fails or is removed from the segment.

A.2.10 Advanced control function block suite (Option Code A01)

Input Selector Block

Selects between inputs and generates an output using specific selection strategies such as minimum, maximum, midpoint, average or first "good."

Arithmetic Block

Provides pre-defined application-based equations including flow with partial density compensation, electronic remote seals, hydrostatic tank gauging, ratio control and others.

Signal Characterizer Block

Characterizes or approximates any function that defines an input/output relationship by configuring up to twenty X, Y coordinates. The block interpolates an output value for a given input value using the curve defined by the configured coordinates.

Integrator Block

Compares the integrated or accumulated value from one or two variables to pre-trip and trip limits and generates discrete output signals when the limits are reached. This block is useful for calculating total flow, total mass, or volume over time.

A.2.11 FOUNDATION fieldbus Diagnostics Suite (Option Code D01)

The 3051C FOUNDATION fieldbus Diagnostics provide Abnormal Situation Prevention (ASP) indictation. The integral statistical process monitoring (SPM) technology calculates the mean and standard deviation of the process variable 22 times per second. The 3051C ASP algorithm uses these values and highly flexible configuration options for customization to many user-defined or application specific abnormal situations. The detection of plugged impulse lines is the first available predefined application.

A.2.12 Low Power (output code M)

Output

Three wire 1–5 Vdc or 0.8–3.2 Vdc (Option Code C2) user-selectable output. Also user selectable for linear or square root output configuration. Digital process variable superimposed on voltage signal, available to any host conforming to the *HART* protocol. Low-power transmitter operates on 6–14 Vdc with no load.

Power Consumption

3.0 mA, 18–36 mW

Minimum Load Impedance

100 kΩ (V_{out} wiring)

Indication

Optional 5-digit LCD display

Overpressure Limits

Rosemount 3051CD/CG

- Range 0: 750 psi (51,7 bar)
- Range 1: 2000 psig (137,9 bar)
- Ranges 2–5: 3626 psig (250 bar)
  4500 psig (310,3 bar) for option code P9

Rosemount 3051CA

- Range 1: 750 psia (51,7 bar)
- Range 2: 1500 psia (103,4 bar)
- Range 3: 1600 psia (110,3 bar)
- Range 4: 6000 psia (413,7 bar)

Rosemount 3051H

- All Ranges: 3626 psig (25 MPa)

Rosemount 3051TG/TA

- Range 1: 750 psi (51,7 bar)
- Range 2: 1500 psi (103,4 bar)
- Range 3: 1600 psi (110,3 bar)
- Range 4: 6000 psi (413,7 bar)
- Range 5: 15000 psi (1034,2 bar)

For 3051L or Level Flange Option Codes FA, FB, FC, FD, FP, and FQ, limit is 0 psia to the flange rating or sensor rating, whichever is lower.

Table A-4. 3051L and level flange rating limits

Standard	Type	CS rating	SST rating
ANSI/ASME	Class 150	285 psig	275 psig
ANSI/ASME	Class 300	740 psig	720 psig
ANSI/ASME	Class 600	1480 psig	1440 psig
At 100 °F (38 °C), the rating decreases with increasing temperature.			
DIN	PN 10–40	40 bar	40 bar
DIN	PN 10/16	16 bar	16 bar
DIN	PN 25/40	40 bar	40 bar
At 248 °F (120 °C), the rating decreases with increasing temperature.			

A.2.13 Static Pressure Limit

Rosemount 3051CD Only

Operates within specifications between static line pressures of 0.5 psia and 3626 psig (4500 psig (310, 3 bar) for
Option Code P9).

Range 0: 0.5 psia and 750 psig (3, 4 bar and 51, 7 bar)

Range 1: 0.5 psia and 2000 psig (3, 4 bar and 137, 9 bar)

A.2.14 Burst Pressure Limits

Burst pressure on Coplanar, traditional, or 3051H process flange is 10000 psig (69 MPa).

Burst pressure for the 3051T is:

Ranges 1–4: 11000 psi (75,8 MPa)

Range 5: 26000 psig (179 MPa)

A.2.15 Failure Mode Alarm

Output Code A

If self-diagnostics detect a gross transmitter failure, the analog signal will be driven either below 3.75 mA or to 21.75 mA to alert the user. NAMUR-compliant values are available, option code C4. High or low alarm signal is user-selectable by internal jumper.

Output Code M

If self-diagnostics detect a gross transmitter failure, the analog signal will be driven either below 0.94 V or above 5.4 V to alert the user (below 0.75 V or above 4.4 V for Option C2). High or low alarm signal is user-selectable by internal jumper.

Output Code F and W

If self-diagnostics detect a gross transmitter failure, that information gets passed as a status along with the process variable.

A.2.16 Temperature Limits

Ambient

–40 to 185 °F (–40 to 85 °C)

With LCD display[1]: –40 to 175 °F (–40 to 80 °C)

Storage

–50 to 230 °F (–46 to 110 °C)

With LCD display: –40 to 185 °F (–40 to 85 °C)

Process

At atmospheric pressures and above. See Table A-5

(1) LCD display may not be readable and LCD updates will be slower at temperatures below -4 °F (-20 °C).

Table A-5. 3051 process temperature limits

3051CD, 3051CG, 3051CA	
Silicone Fill Sensor[1]	
with Coplanar Flange	–40 to 250 °F (–40 to 121 °C)[2]
with Traditional Flange	–40 to 300 °F (–40 to 149 °C)[2][3]
with Level Flange	–40 to 300 °F (–40 to 149 °C)[2]
with 305 Integral Manifold	–40 to 300 °F (–40 to 149 °C)[2]
Inert Fill Sensor[1]	-40 to 185 °F (–40 to 85 °C)[4][5]
3051H (process fill fluid)	
D.C.® Silicone 200[1]	–40 to 375 °F (–40 to 191 °C)
Inert[1]	–50 to 350 °F (–45 to 177 °C)
Neobee M-20®[1]	0 to 375 °F (–18 to 191 °C)
3051T (process fill fluid)	
Silicone Fill Sensor[1]	–40 to 250 °F (–40 to 121 °C)[2]
Inert Fill Sensor[1]	–22 to 250 °F (–30 to 121 °C)[2]
3051L low-side temperature limits	
Silicone Fill Sensor[1]	–40 to 250 °F (–40 to 121 °C)[2]
Inert Fill Sensor[1]	0 to 185 °F (–18 to 85 °C)[2]

3051L high-side temperature limits (process fill fluid)	
Sylltherm® XLT	–100 to 300 °F (–73 to 149 °C)
D.C. Silicone 704®	32 to 400 °F (0 to 205 °C)
D.C. Silicone 200	–40 to 400 °F (–40 to 205 °C)
Inert	–50 to 350 °F (–45 to 177 °C)
Glycerin and Water	0 to 200 °F (–18 to 93 °C)
Neobee M-20	0 to 400 °F (–18 to 205 °C)
Propylene Glycol and Water	0 to 200 °F (–18 to 93 °C)

(1) Process temperatures above 185 °F (85 °C) require derating the ambient limits by a 1.5:1 ratio (0.6:1 ratio for the 3051H).
(2) 220 °F (104 °C) limit in vacuum service; 130 °F (54 °C) for pressures below 0.5 psia.
(3) 3051CD0 process temperature limits are –40 to 212 °F (–45 to 100 °C)
(4) 160 °F (71 °C) limit in vacuum service.
(5) Not available for 3051CA.

Humidity Limits

0–100% relative humidity

Turn-On Time

Performance within specifications less than 2.0 seconds (10.0 s for Profibus protocol) after power is applied to the transmitter

Volumetric Displacement

Less than 0.005 in^3 (0,08 cm^3)

Damping

Analog output response to a step input change is user-selectable from 0 to 36 seconds for one time constant. This software damping is in addition to sensor module response time.

A.3 Physical specifications

A.3.1 Electrical Connections

1/2–14 NPT, G1/2, and M20 × 1.5 (CM20) conduit. HART interface connections fixed to terminal block.

A.3.2 Process Connections

All Models except 3051L and 3051T

1/4–18 NPT on 2 1/8-in. centers

1/2–14 NPT on 2-, 2 1/8-, or 2 1/4-in. centers

Rosemount 3051L

High pressure side: 2-, 3-, or 4-in., ASME B 16.5 (ANSI) Class 150, 300 or 600 flange; 50, 80 or 100 mm, PN 40 or 10/16 flange

Low pressure side: 1/4–18 NPT on flange 1/2–14 NPT on adapter

Rosemount 3051T

1/2–14 NPT female. A DIN 16288 Male (available in SST for Range 1–4 transmitters only), or Autoclave type F-250-C (Pressure relieved 9/16–18 gland thread; 1/4 OD high pressure tube 60° cone; available in SST for Range 5 transmitters only).

A.3.3 Process-Wetted Parts

Drain/Vent Valves

316 SST, Alloy C-276, or Alloy 400/K-500(1) material
(Drain vent seat: Alloy 400, Drain vent stem: Alloy K-500)

(1)Alloy 400/K-500 is not available with 3051L or 3051H.

Process Flanges and Adapters

Plated carbon steel
SST: CF-8M (Cast 316 SST) per ASTM A743
Cast C-276: CW-12MW per ASTM A494
Cast Alloy 400: M-30C per ASTM A494

Wetted O-rings

Glass-filled PTFE or Graphite-filled PTFE

Process Isolating Diaphragms

Isolating diaphragm material	3051CD/CG	3051T	3051CA	3051H
316L SST	•	•	•	•
Alloy C-276	•	•	•	•
Alloy 400	•		•	
Tantalum	•			•
Gold-plated Alloy 400	•		•	
Gold-plated SST	•		•	

A.3.4 Rosemount 3051L Process Wetted Parts

Flanged Process Connection (Transmitter High Side)

Process Diaphragms, Including Process Gasket Surface

- 316L SST, Alloy C-276, or Tantalum
- Extension
- CF-3M (Cast version of 316L SST, material per ASTM-A743), or Alloy C-276. Fits schedule 40 and 80 pipe.
- Mounting Flange
- Zinc-cobalt plated CS or SST

Reference Process Connection (Transmitter Low Side)

Isolating Diaphragms

- 316L SST or Alloy C-276

Reference Flange and Adapter

- CF-8M (Cast version of 316 SST, material per ASTM-A743)

A.3.5 Non-Wetted Parts

Electronics Housing

Low copper aluminum or SST: CF-3M or CF-8M (Cast version of 316L or 316 SST, material per ASTM-A743). NEMA 4X, IP 65, IP 66

Coplanar Sensor Module Housing

CF-3M (Cast version of 316L SST, material per ASTM-A743)

Bolts

ASTM A449, Type 1 (zinc-cobalt plated carbon steel)
ASTM F593G, Condition CW1 (Austenitic 316 SST)
ASTM A193, Grade B7M (zinc plated alloy steel)
Alloy 400

Sensor Module Fill Fluid

Silicone oil (D.C. 200) or Fluorocarbon oil (Halocarbon or Fluorinert® FC-43 for 3051T)

Process Fill Fluid (3051L and 3051H only)

3051L: Syltherm XLT, D.C. Silicone 704,
D.C. Silicone 200, inert, glycerin and water, Neobee M-20 or propylene glycol and water

3051H: inert, Neobee M-20, or D.C. Silicone 200

Paint

Polyurethane

Cover O-rings

Buna-N

A.3.6 Shipping Weights

Refer to "Shipping weights" on page 159.

A.4 Dimensional Drawings

3051 Exploded View

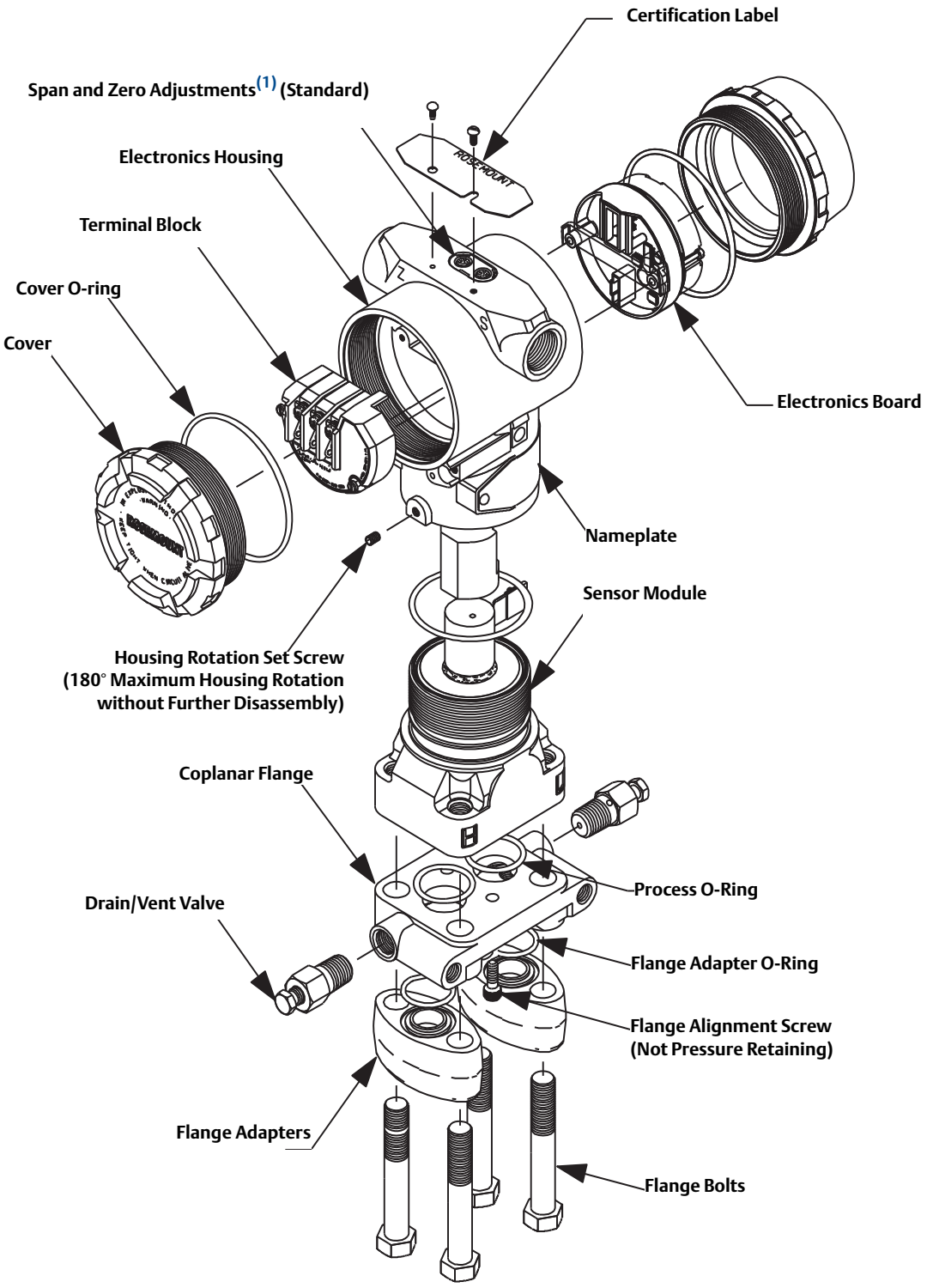

(1) Span and Zero Adjustments are not available with fieldbus or profibus protocols.

3051C Coplanar Flange

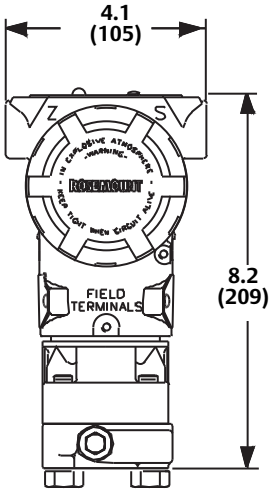

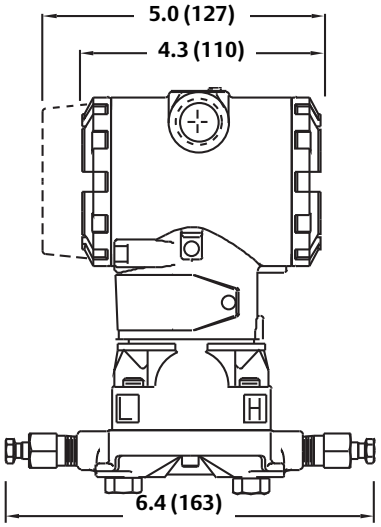

3051C Coplanar Flange with Rosemount 305 Coplanar Integral Manifold

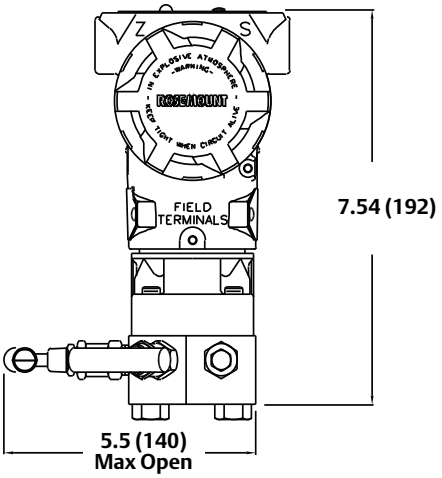

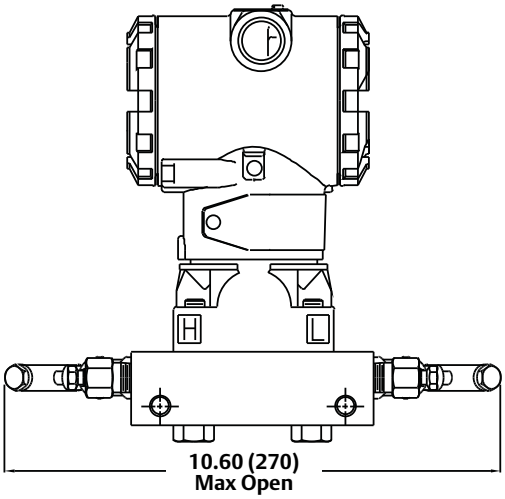

Coplanar Flange Mounting Configurations with Optional Bracket (B4) for 2-in. Pipe or Panel Mounting

PANEL MOUNTING

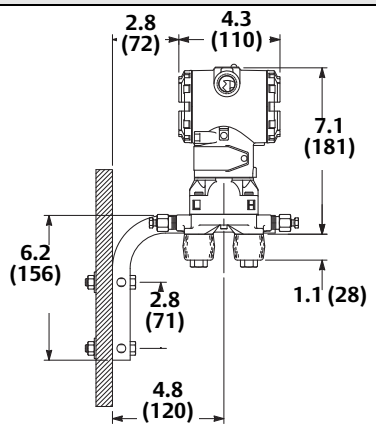

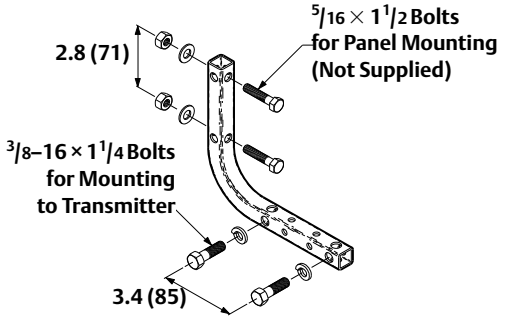

PIPE MOUNTING

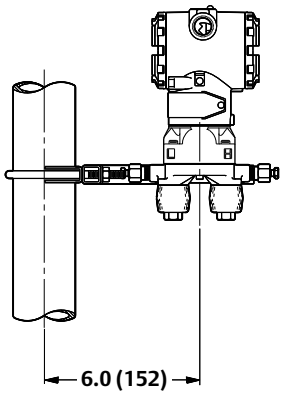

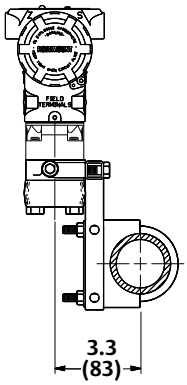

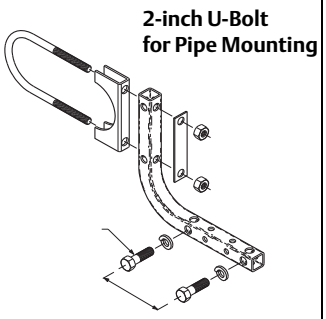

Dimensions are in inches (millimeters)

3051C Coplanar with Traditional Flange

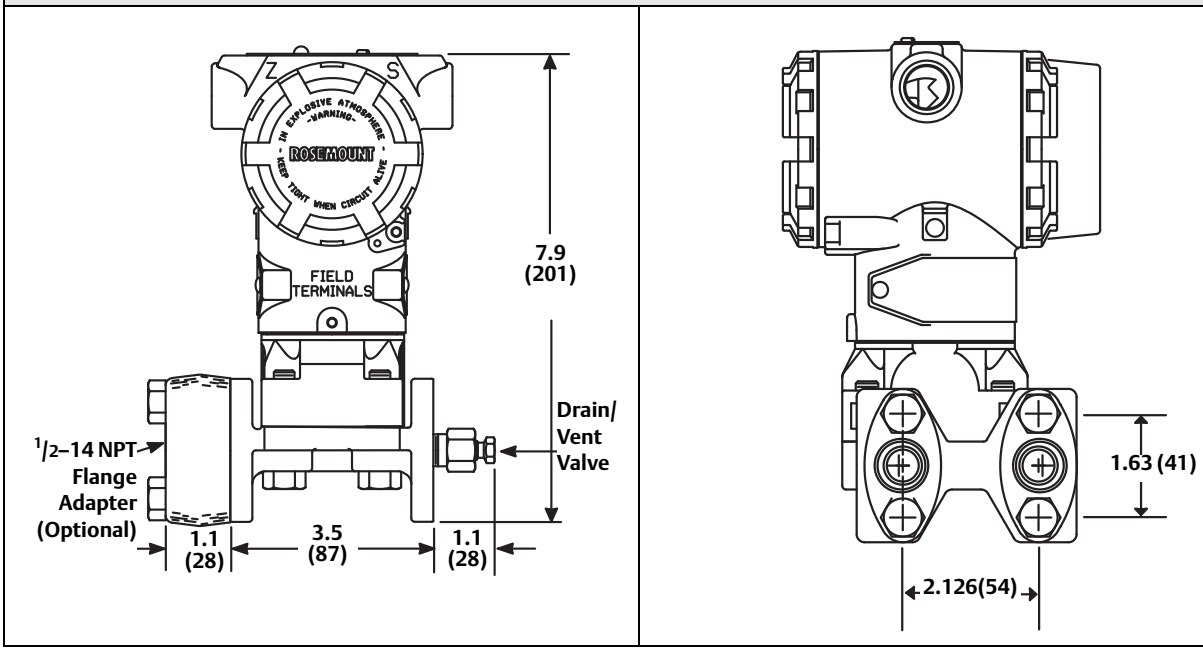

Dimensions are in inches (millimeters)

3051C Coplanar with Rosemount 305 Traditional Integral Manifold

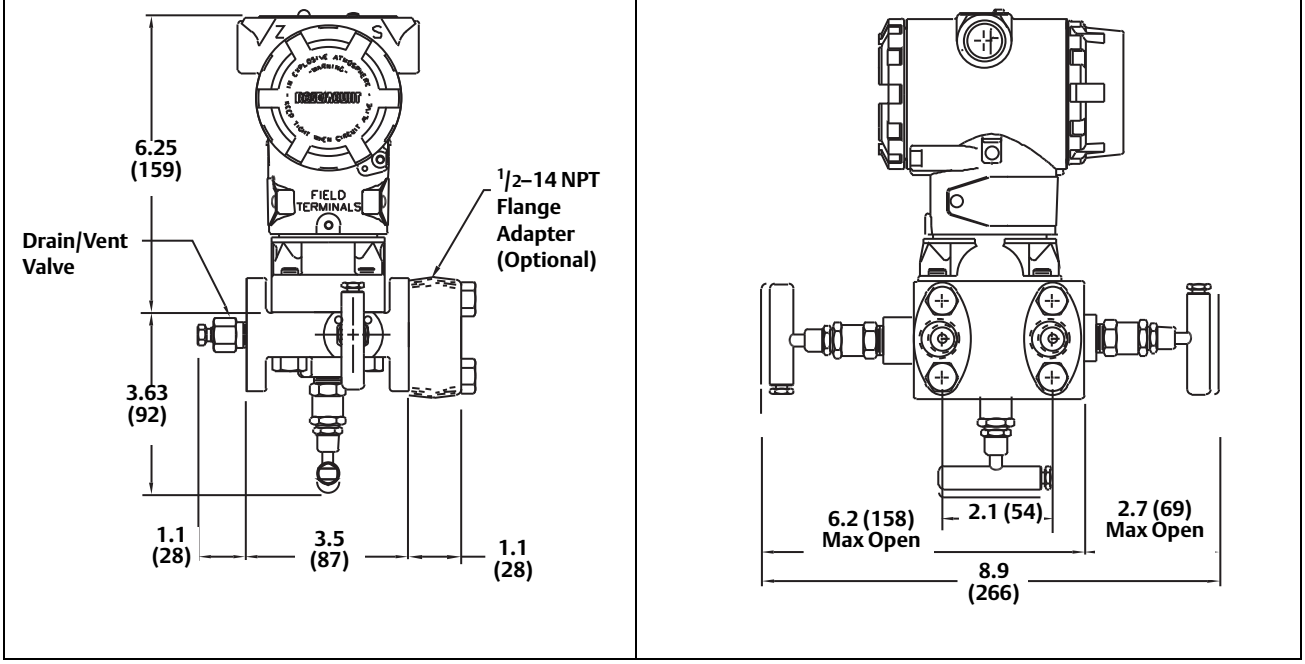

Dimensions are in inches (millimeters)

Traditional Flange Mounting Configurations with Optional Brackets for 2-in. Pipe or Panel Mounting

Panel Mounting Bracket (option B2/B8)

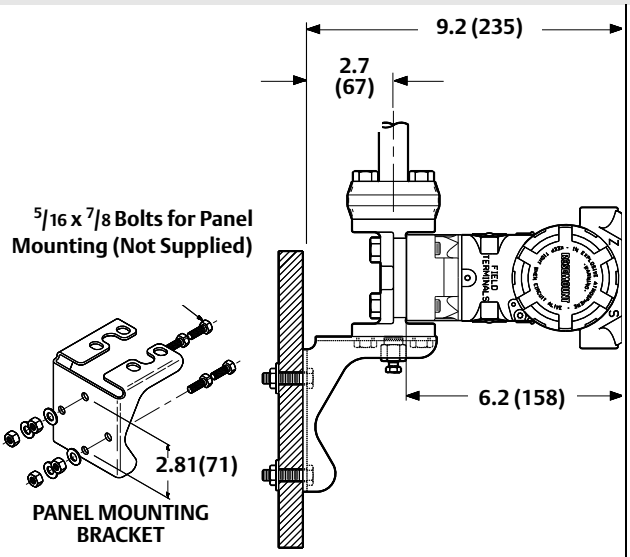

2-in. Pipe Mounting Bracket (option B1/B7/BA)

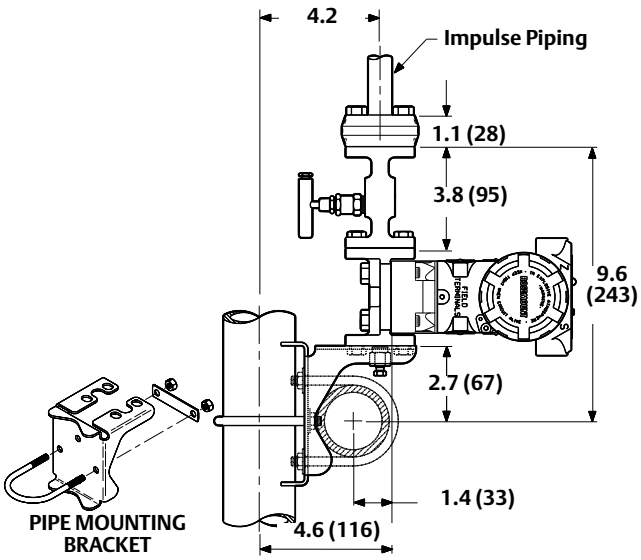

2-in. Pipe Mounting Bracket (option B3/B9/BC)

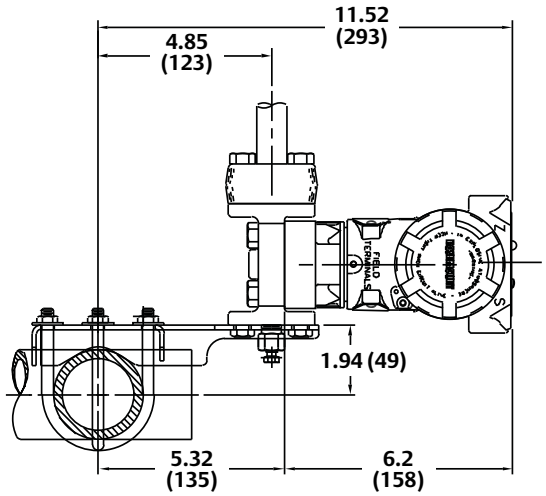

3051T Dimensional Drawings

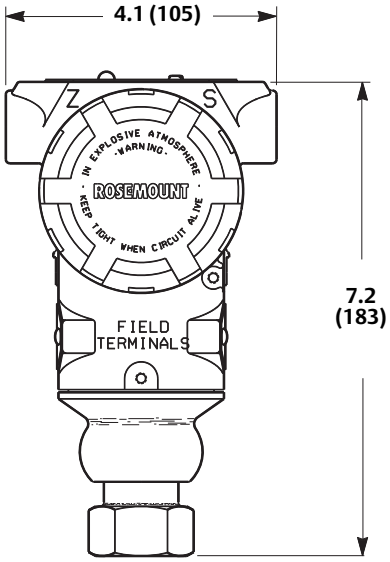

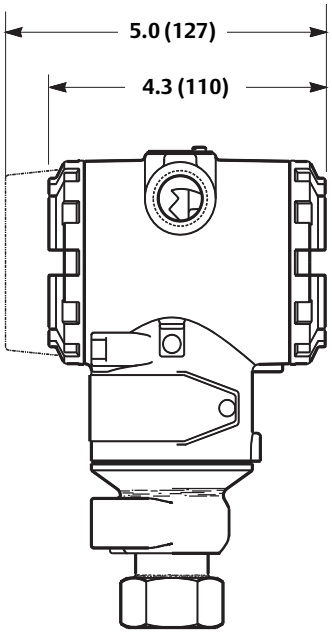

3051T with Rosemount 306 Integral Manifold

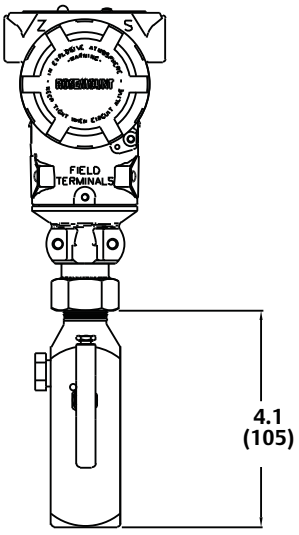

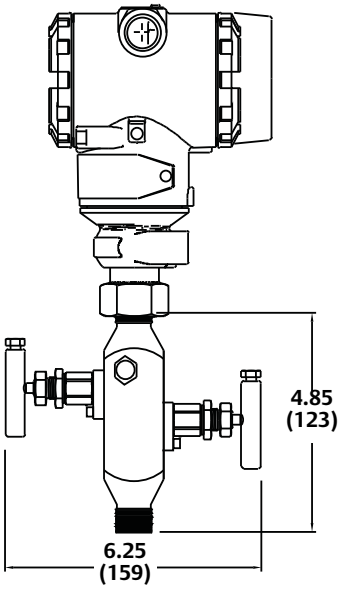

3051T Typical Mounting Configurations with Optional Mounting Bracket

Pipe Mounting

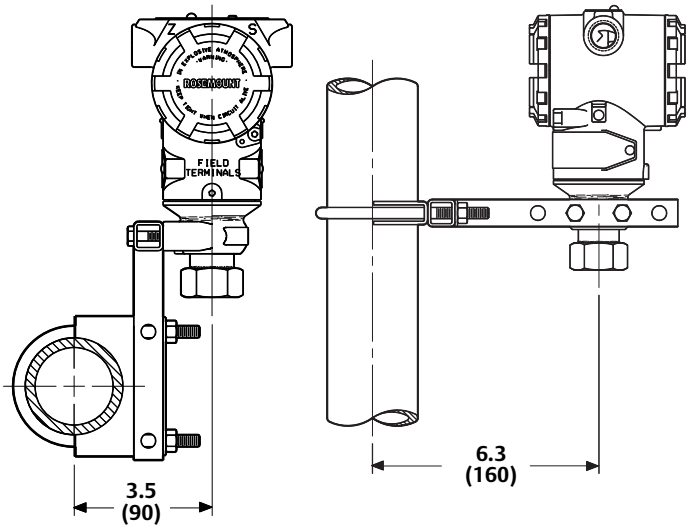

Panel Mounting

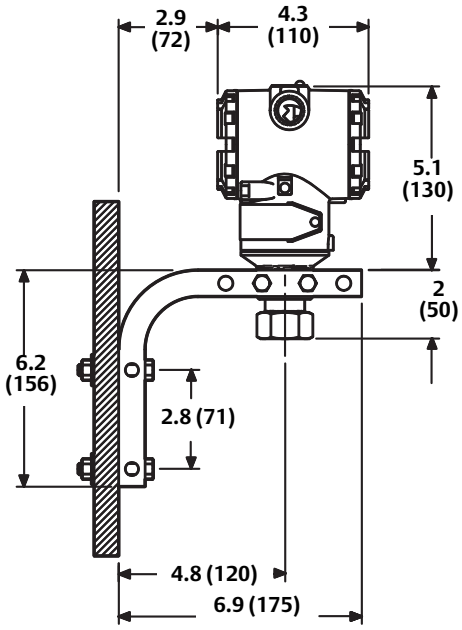

Dimensions are in inches (millimeters)

3051L Dimensional Drawings

2-in. Flange Configuring (Flush Mount Only)

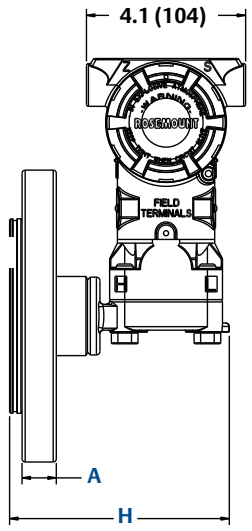

3- and 4-in. Flange Configuration

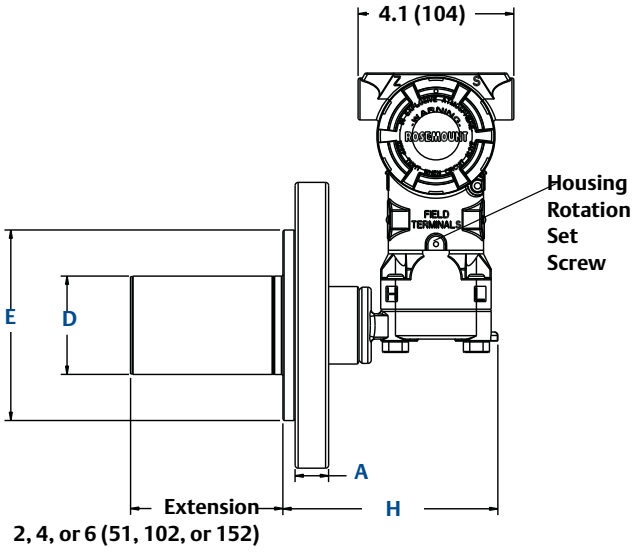

Optional Flushing Connection Ring (Lower Housing)

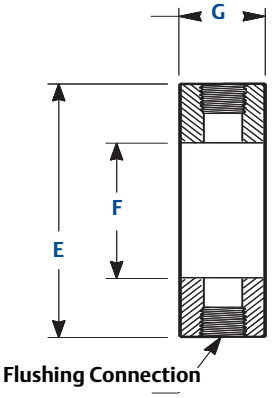

Diaphragm Assembly and Mounting Flange

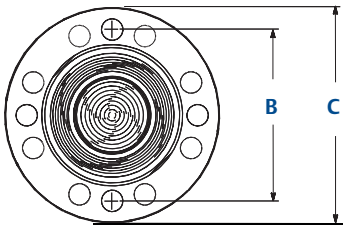

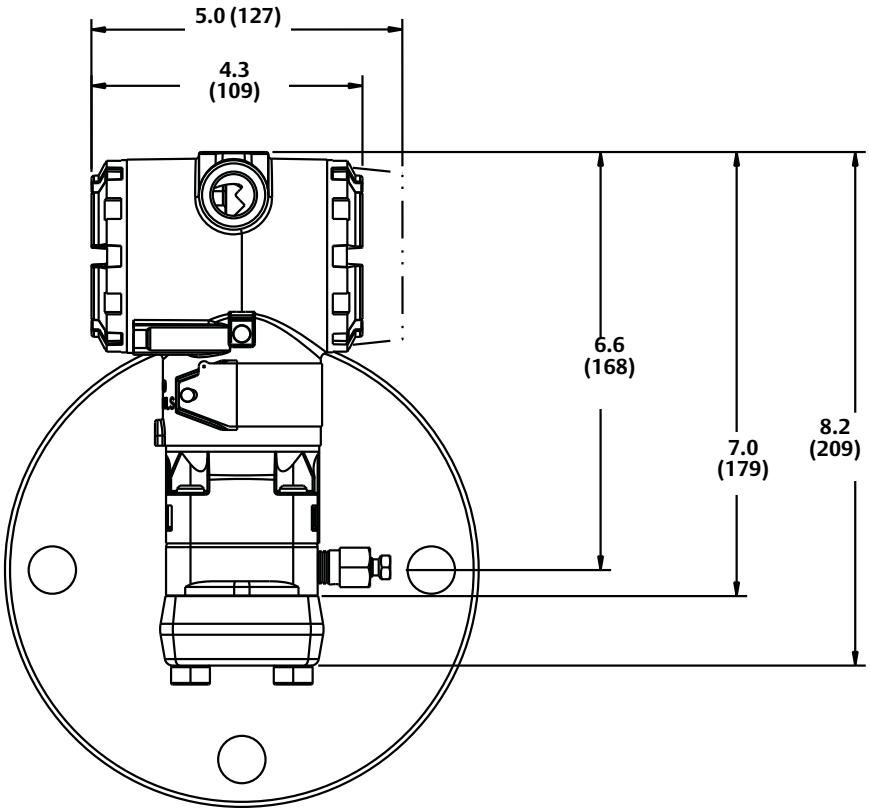

Dimensions are in inches (millimeters)

Class	Pipe size	Flange thickness A	Bolt circle diameter B	Outside diameter C	No. of bolts	Bolt hole diameter	Extension diameter[1] D	O.D. gasket surface E
ASME B16.5 (ANSI) 150	2 (51)	0.69 (18)	4.75 (121)	6.0 (152)	4	0.75 (19)	NA	3.6 (92)
	3 (76)	0.88 (22)	6.0 (152)	7.5 (191)	4	0.75 (19)	2.58 (66)	5.0 (127)
	4 (102)	0.88 (22)	7.5 (191)	9.0 (229)	8	0.75 (19)	3.5 (89)	6.2 (158)
ASME B16.5 (ANSI) 300	2 (51)	0.82 (21)	5.0 (127)	6.5 (165)	8	0.75 (19)	NA	3.6 (92)
	3 (76)	1.06 (27)	6.62 (168)	8.25 (210)	8	0.88 (22)	2.58 (66)	5.0 (127)
	4 (102)	1.19 (30)	7.88 (200)	10.0 (254)	8	0.88 (22)	3.5 (89)	6.2 (158)
ASME B16.5 (ANSI) 600	2 (51)	1.00 (25)	5.0 (127)	6.5 (165)	8	0.75 (19)	NA	3.6 (92)
	3 (76)	1.25 (32)	6.62 (168)	8.25 (210)	8	0.88 (22)	2.58 (66)	5.0 (127)
DIN 2501 PN 10–40	DN 50	20 mm	125 mm	165 mm	4	18 mm	NA	4.0 (102)
DIN 2501 PN 25/40	DN 80	24 mm	160 mm	200 mm	8	18 mm	66 mm	5.4 (138)
	DN 100	24 mm	190 mm	235 mm	8	22 mm	89 mm	6.2 (158)
DIN 2501 PN 10/16	DN 100	20 mm	180 mm	220 mm	8	18 mm	89 mm	6.2 (158)

Class	Pipe size	Process side F	Lower housing G		H
			1/4 NPT	1/2 NPT	
ASME B16.5 (ANSI) 150	2 (51)	2.12 (54)	0.97 (25)	1.31 (33)	5.65 (143)
	3 (76)	3.6 (91)	0.97 (25)	1.31 (33)	5.65 (143)
	4 (102)	3.6 (91)	0.97 (25)	1.31 (33)	5.65 (143)
ASME B16.5 (ANSI) 300	2 (51)	2.12 (54)	0.97 (25)	1.31 (33)	5.65 (143)
	3 (76)	3.6 (91)	0.97 (25)	1.31 (33)	5.65 (143)
	4 (102)	3.6 (91)	0.97 (25)	1.31 (33)	5.65 (143)
ASME B16.5 (ANSI) 600	2 (51)	2.12 (54)	0.97 (25)	1.31 (33)	7.65 (194)
	3 (76)	3.6 (91)	0.97 (25)	1.31 (33)	7.65 (194)
DIN 2501 PN 10–40	DN 50	2.4 (61)	0.97 (25)	1.31 (33)	5.65 (143)
DIN 2501 PN 25/40	DN 80	3.6 (91)	0.97 (25)	1.31 (33)	5.65 (143)
	DN 100	3.6 (91)	0.97 (25)	1.31 (33)	5.65 (143)
DIN 2501 PN 10/16	DN 100	3.6 (91)	0.97 (25)	1.31 (33)	5.65 (143)

(1) Tolerances are 0.040 (1,02), –0.020 (0,51).

3051H Pressure Transmitter Exploded View and Dimensional Drawings

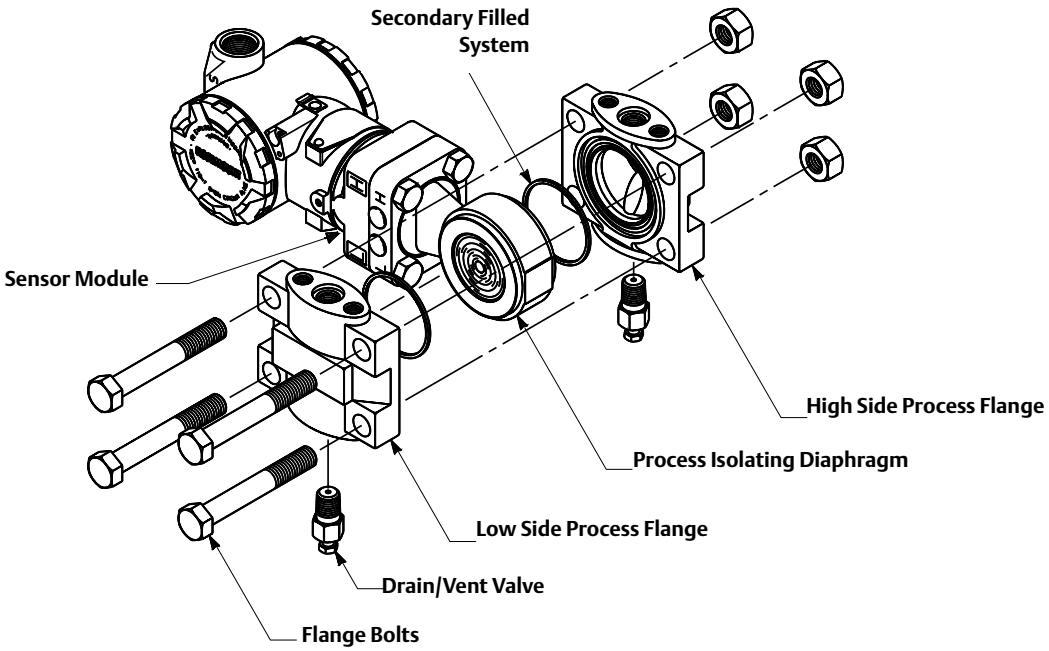

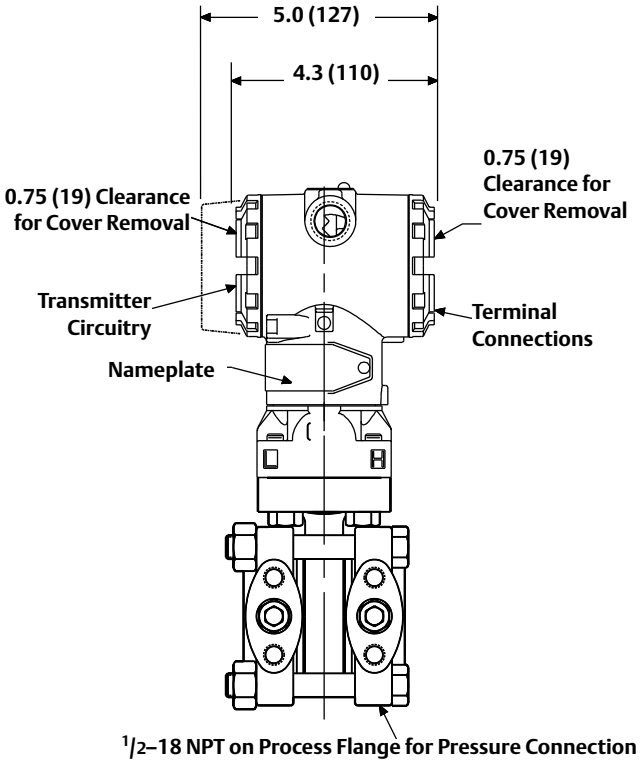

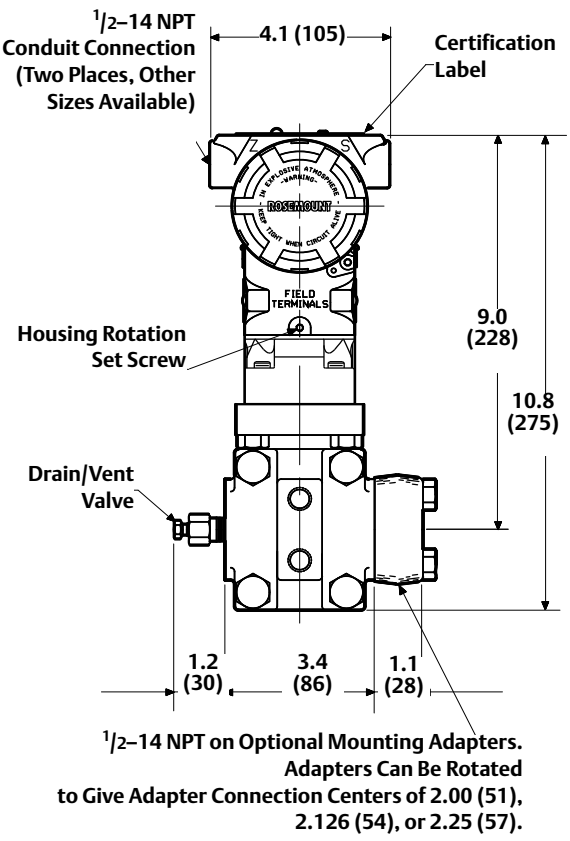

Dimensions are in inches (millimeters)

3051H Mounting Brackets for 2-in. Pipe and Panel Mount (Option Code B5/B6)

PIPE MOUNTING CONFIGURATION

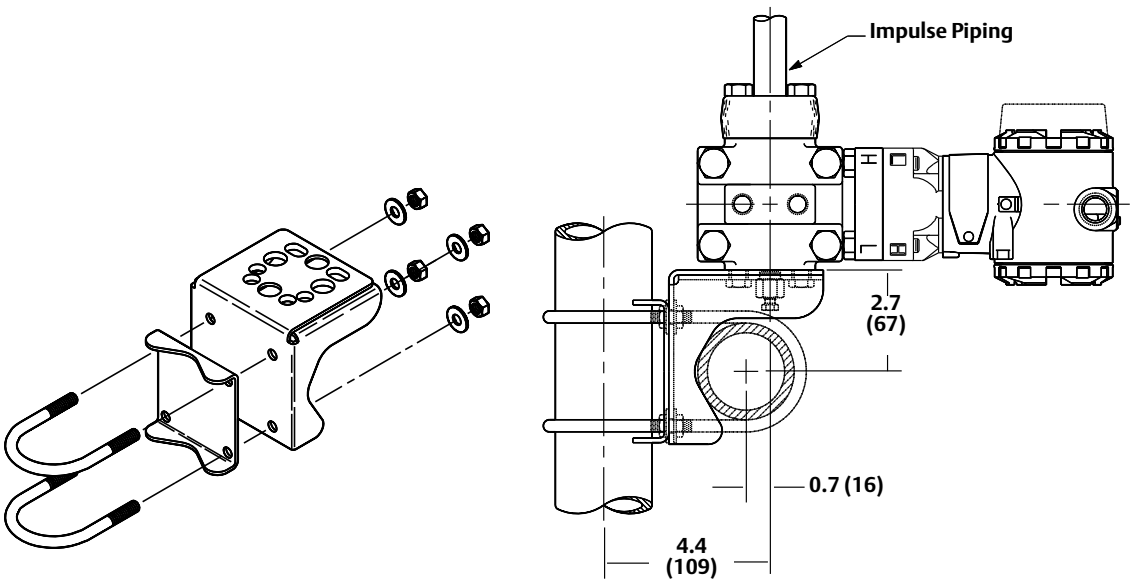

PANEL MOUNTING CONFIGURATION
$^{7}/_{16}$–20 x $^{3}/_{4}$ Bolts Supplied for Attaching Bracket to Transmitter

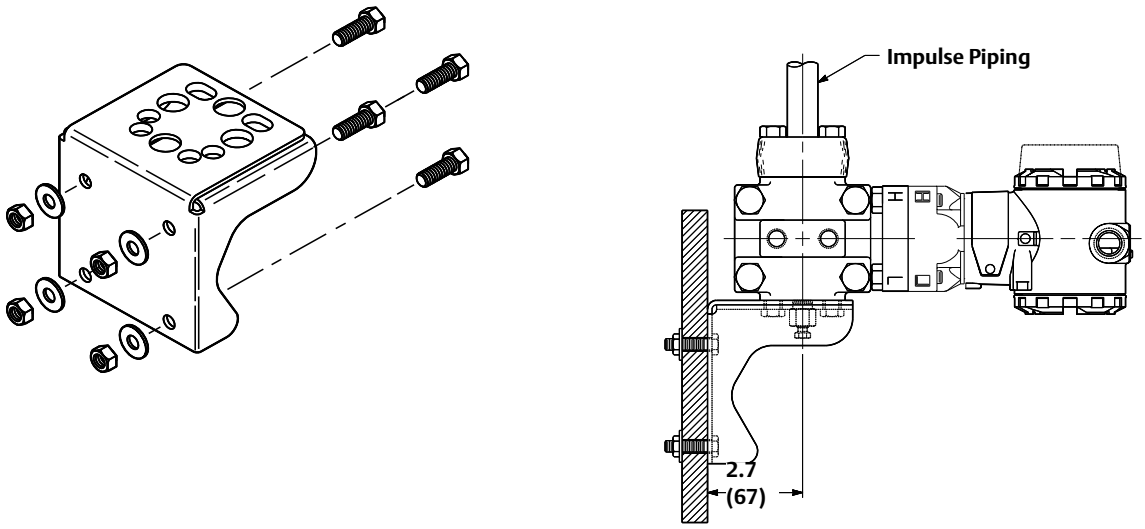

Dimensions are in inches (millimeters)

A.5 Ordering Information

Model	Transmitter Type			
3051C	Coplanar Pressure Transmitter			
Measurement Type				
Standard				**Standard**
D	Differential			★
G	Gage			★
Expanded				
A	Absolute			
Pressure Ranges (Range/Min. Span)				
	3051CD	3051CG[1]	3051CA	
Standard				**Standard**
1	–25 to 25 inH_2O/0.5 inH_2O (–62,2 to 62,2 mbar/1,2 mbar)	–25 to 25 inH_2O/0.5 inH_2O (–62,1 to 62,2 mbar/1,2 mbar)	0 to 30 psia/0.3 psia (0 to 2,1 bar/20,7 mbar)	★
2	–250 to 250 inH2O/2.5 inH_2O (–623 to 623 mbar/6,2 mbar)	–250 to 250 inH_2O/2.5 inH_2O (–621 to 623 mbar/6,2 mbar)	0 to 150 psia/1.5 psia (0 to 10,3 bar/0,1 bar)	★
3	–1000 to 1000 inH_2O/10 inH_2O (–2,5 to 2,5 bar/25 mbar)	–393 to 1000 inH_2O/10in H_2O (–0,98 to 2,5 bar/25 mbar)	0 to 800 psia/8 psia (0 to 55,2 bar/0,55 bar)	★
4	–300 to 300 psi/3 psi (–20,7 to 20,7 bar/0,2 bar)	–14.2 to 300 psi/3 psi (–0,98 to 20,7 bar/0,2 bar)	0 to 4000 psia/40 psia (0 to 275,8 bar/2,8 bar)	★
5	–2000 to 2000 psi/20 psi (–137,9 to 137,9 bar/1,4 bar)	–14.2 to 2000 psig/20 psi (–0,98 to 137,9 bar/1,4 bar)	Not Applicable	★
Expanded				
0[2]	–3 to 3 inH_2O/0.1 inH_2O (–7,5 to 7,5 mbar/0,25 mbar)	Not Applicable	Not Applicable	
Output				
Standard				**Standard**
A	4–20 mA with Digital Signal Based on HART Protocol			★
F	FOUNDATION fieldbus Protocol			★
W[3]	Profibus PA Protocol			★
Expanded				
M[4]	Low-Power, 1–5 Vdc with Digital Signal Based on HART Protocol *(See Option C2 for 0.8–3.2 V dc)*			

Materials of Construction				
	Process Flange Type	Flange Material	Drain/Vent	
Standard				**Standard**
2	Coplanar	SST	SST	★
3[(5)]	Coplanar	Cast C-276	Alloy C-276	★
4	Coplanar	Cast Alloy 400	Alloy 400/K-500	★
5	Coplanar	Plated CS	SST	★
7[(5)]	Coplanar	SST	Alloy C-276	★
8[(5)]	Coplanar	Plated CS	Alloy C-276	★
0	Alternate Flange—See Options on page 156			★
Isolating Diaphragm				
Standard				**Standard**
2[(5)]	316L SST			★
3[(5)]	Alloy C-276			★
Expanded				
4	Alloy 400			
5	Tantalum (Available on 3051CD and CG, Ranges 2–5 only. Not available on 3051CA)			
6	Gold-plated Alloy 400 (Use in combination with O-ring Option Code B.)			
7	Gold-plated SST			
O-ring				
Standard				**Standard**
A	Glass-filled PTFE			★
B	Graphite-filled PTFE			★
Sensor Fill Fluid				
Standard				**Standard**
1	Silicone			★
2	Inert fill (Differential and Gage only)			★
Housing Material			**Conduit Entry Size**	
Standard				**Standard**
A	Polyurethane-covered Aluminum		½–14 NPT	★
B	Polyurethane-covered Aluminum		M20 × 1.5 (CM20)	★
J	SST		½–14 NPT	★
K	SST		M20 × 1.5 (CM20)	★

Expanded			
D	Polyurethane-covered Aluminum	G½	
M	SST	G½	

A.5.1 Options (Include with selected model number)

Plantweb Control Functionality		
Standard		**Standard**
A01	FOUNDATION fieldbus Advanced Control Function Block Suite	★
Plantweb Diagnostic Functionality		
Standard		**Standard**
D01	FOUNDATION fieldbus Diagnostics Suite	★
Alternate Flange		
Standard		**Standard**
H2	Traditional Flange, 316 SST, SST Drain/Vent	★
H3(5)	Traditional Flange, Alloy C, Alloy C-276 Drain/Vent	★
H4	Traditional Flange, Monel, Monel Drain/Vent	★
H7(5)	Traditional Flange, 316 SST, Alloy C-276 Drain/Vent	★
HJ	DIN Compliant Traditional Flange, SST, 1/16 in. Adapter/Manifold Bolting	★
FA	Level Flange, SST, 2 in., ANSI Class 150, Vertical Mount	★
FB	Level Flange, SST, 2 in., ANSI Class 300, Vertical Mount	★
FC	Level Flange, SST, 3 in., ANSI Class 150, Vertical Mount	★
FD	Level Flange, SST, 3 in., ANSI Class 300, Vertical Mount	★
FP	DIN Level Flange, SST, DN 50, PN 40, Vertical Mount	★
FQ	DIN Level Flange, SST, DN 80, PN 40, Vertical Mount	★
Expanded		
HK	DIN Compliant Traditional Flange, SST, 10 mm Adapter/Manifold Bolting	
HL	DIN Compliant Traditional Flange, SST, 12mm Adapter/Manifold Bolting (Not available on 3051CD0)	
Integral Assembly		
Standard		**Standard**
S3(6)	Assemble to Rosemount 405 Compact Orifice Plate	★
S5(6)	Assemble to Rosemount 305 Integral Manifold (specified separately, see the Rosemount 305 and 306 Integral Manifolds PDS (document number 00813-0100-4733))	★
S6(6)	Assemble to Rosemount 304 Manifold or Connection System	★

Integral Mount Primary Element		
Standard		**Standard**
S4[(6)]	Assemble to Rosemount Annubar or Rosemount 1195 Integral Orifice *(With the primary element installed, the maximum operating pressure will equal the lesser of either the transmitter or the primary element. Option is available for factory assembly to range 1–4 transmitters only)*	★
Seal Assemblies		
Standard		**Standard**
S1[(6)]	Assemble to one Rosemount 1199 seal	★
S2[(6)]	Assemble to two Rosemount 1199 seals	★
All-Welded Seal Assemblies (for high vacuum applications)		
Standard		**Standard**
S0[(6)]	One Seal, All-Welded System (Direct Mount Connection Type)	★
S7[(6)]	One Seal, All-Welded System (Capillary Connection Type)	★
S8[(6)]	Two Seals, All-Welded System (Capillary Connection Type)	★
S9[(6)]	Two Seals, All-Welded System (One Direct Mount and One Capillary Connection Type)	★
Mounting Bracket		
Standard		**Standard**
B1	Traditional Flange Bracket for 2-in. Pipe Mounting, CS Bolts	★
B2	Traditional Flange Bracket for Panel Mounting, CS Bolts	★
B3	Traditional Flange Flat Bracket for 2-in. Pipe Mounting, CS Bolts	★
B4	Coplanar Flange Bracket for 2-in. Pipe or Panel Mounting, all SST	★
B7	B1 Bracket with Series 300 SST Bolts	★
B8	B2 Bracket with Series 300 SST Bolts	★
B9	B3 Bracket with Series 300 SST Bolts	★
BA	SST B1 Bracket with Series 300 SST Bolts	★
BC	SST B3 Bracket with Series 300 SST Bolts	★
Product Certifications		
Standard		**Standard**
C6	CSA Explosion-proof, Dust Ignition-proof, Intrinsically Safe, and Division 2	★
E2	INMETRO Flameproof	★

E3	China Flameproof	★
E4[12]	TIIS Flame-proof	★
E5	FM Explosion-proof, Dust Ignition-Proof	★
E7[7]	IECEx Flameproof, Dust Ignition-proof	★
E8	ATEX Flameproof and Dust	★
I1[7]	ATEX Intrinsic Safety and Dust	★
I2	INMETRO Intrinsic Safety	★
I3	China Intrinsic Safety	★
I4	TIIS Intrinsic Safety	★
I5	FM Intrinsically Safe, Division 2	★
I7[7]	IECEx Intrinsic Safety	★
IA	ATEX FISCO Intrinsic Safety; for FOUNDATION fieldbus protocol only	★
IE	FM FISCO Intrinsically Safe; for FOUNDATION fieldbus protocol only	★
K2	INMETRO Flameproof, Instrinsic Safety	★
K5	FM Explosion-proof, Dust Ignition-Proof, Intrinsically Safe, and Division 2	★
K6[7]	CSA and ATEX Explosion-proof, Intrinsically Safe, and Division 2 (combination of C6 and K8)	★
K7[7]	IECEx Flame-proof, Dust Ignition-proof, Intrinsic Safety, and Type n (combination of I7, N7, and E7)	★
K8[12]	ATEX Flameproof, Intrinsic Safety, Type n, Dust (combination of E8, I1, and N1)	★
KB	FM and CSA Explosion-proof, Dust Ignition Proof, Intrinsically Safe, and Division 2 (combination of K5 and C6)	★
KD[12]	FM, CSA, and ATEX Explosion-proof, Intrinsically Safe (combination of K5, C6, I1, and E8)	★
N1[12]	ATEX Type n and Dust	★
N3	China Type n	★
N7[7]	IECEx Type n	★
Custody Transfer		
Standard		**Standard**
C5[9]	Measurement Canada Accuracy Approval *(Limited availability depending on transmitter type and range. Contact an Emerson Process Management representative)*	★
Bolting Material		
Standard		**Standard**
L4	Austenitic 316 SST Bolts	★
L5	ASTM A 193, Grade B7M Bolts	★
L6	Alloy K-500 Bolts	★
Display Type		
Standard		**Standard**
M4[8]	LCD Display with Local Operator Interface	★
M5	LCD display for Aluminum Housing (Housing Codes A, B, C, and D only)	★
M6	LCD display for SST Housing (Housing Codes J, K, L, and M only)	★

Calibration Certificate		
Standard		**Standard**
Q4	Calibration Certificate	★
QG	Calibration Certificate and GOST Verification Certificate	★
QP	Calibration certification and tamper evident seal	★
Material Traceability Certification		
Standard		**Standard**
Q8	Material Traceability Certification per EN 10204 3.1 *(Only available for the sensor module housing and Coplanar or traditional flanges and adapters (3051C), and for the sensor module housing and low-volume Coplanar flange and adapter (3051C with Option Code S1))*	★
Quality Certification for Safety		
Standard		**Standard**
QS	Certificate of FMEDA Data	★
Zero/Span Adjustment		
Standard		**Standard**
J1[(9)(10)]	Local Zero Adjustment Only	★
J3[(9)(10)]	No Local Zero or Span Adjustment	★
Transient Protection Terminal Block		
Standard		**Standard**
T1	Transient Protection Terminal Block	★
Software Configuration		
Standard		**Standard**
C1[(9)]	Custom Software Configuration (Completed CDS 00806-0100-4001 required with order)	★
Low Power Output		
Expanded		
C2[(9)]	0.8–3.2 Vdc Output with Digital Signal Based on HART Protocol (Output Code M only)	
Gage Pressure Calibration		
Standard		**Standard**
C3	Gage Calibration (Model 3051CA4 only)	★
Alarm Limit		
Standard		**Standard**
C4[(9)(11)]	Analog Output Levels Compliant with NAMUR Recommendation NE 43, Alarm High	★
CN[(9)(11)]	Analog Output Levels Compliant with NAMUR Recommendation NE 43, Alarm Low	★

Pressure Testing		
Expanded		
P1	Hydrostatic Testing with Certificate	
Cleaning Process Area		
Expanded		
P2	Cleaning for Special Service	
P3	Cleaning for <1 PPM Chlorine/Fluorine	
Pressure Calibration		
Expanded		
P4	Calibrate at Line Pressure *(Specify Q48 on order for corresponding certificate)*	
High Accuracy		
Standard		**Standard**
P8	0.04% accuracy to 5:1 turndown (Range 2-4)	★
Flange Adapters		
Standard		**Standard**
DF	1/2 -14 NPT flange adapter(s)	★
D3	¼–18 NPT Process Connections (No flange adapters), Hastelloy	★
D3	¼–18 NPT Process Connections (No flange adapters), *Monel*	★
Vent/Drain Valves		
Expanded		
D7	Coplanar Flange Without Drain/Vent Ports	
Conduit Plug		
Standard		**Standard**
DO	316 SST Conduit Plug	★
RC1/4 RC1/2 Process Connection		
Expanded		
D9	JIS Process Connection—RC ¼ Flange with RC ½ Flange Adapter, CS	
D9	JIS Process Connection—RC ¼ Flange with RC ½ Flange Adapter, 316SST	
Max Static Line Pressure		
Standard		**Standard**
P9	4500 psig Static Pressure Limit (3051CD Ranges 2–5 only)	★

Ground Screw		
Standard		**Standard**
V5[12]	External Ground Screw Assembly	★
Drinking Water Approval		
Standard		**Standard**
DW	NSF drinking water approval	★
Surface Finish		
Standard		**Standard**
Q16	Surface finish certification for sanitary remote seals	★
Toolkit Total System Performance Reports		
Standard		**Standard**
QZ	Remote Seal System Performance Calculation Report	★
Conduit Electrical Connector		
Standard		**Standard**
GE	M12, 4-pin, Male Connector (eurofast®)	★
GM	A size Mini, 4-pin, Male Connector (minifast®)	★
Typical Model Number: 3051CD 2 A 2 2 A 1 A B4$13857 780		

(1) 3051CG lower range limit varies with atmospheric pressure.
(2) 3051CD0 is available only with Output Code A, Process Flange Code 0 (Alternate Flange H2, H7, HJ, or HK), Isolating Diaphragm Code 2, O-ring Code A, and Bolting Option L4.
(3) Option code M4 - LCD Display with Local Operator Interface required for local addressing and configuration.
(4) Not available with hazardous locations certification Options Codes I1, N1, E4, K6 and K8.
(5) Materials of Construction comply with recommendations per NACE MR0175/ISO 15156 for sour oil field production environments. Environmental limits apply to certain materials. Consult latest standard for details. Selected materials also conform to NACE MR0103 for sour refining environments.
(6) "Assemble-to" items are specified separately and require a completed model number.
(7) Not available with Low Power code M.
(8) Available only with output code W - Profibus PA.
(9) Not available with Fieldbus (output code F) or Profibus (output code W).
(10) Local zero and span adjustments are standard unless Option Code J1 or J3 is specified.
(11) NAMUR-Compliant operation is pre-set at the factory and cannot be changed to standard operation in the field.
(12) The V5 option is not needed with the T1 option; external ground screw assembly is included with the T1 option.

Model	Transmitter Type	
3051T	Pressure Transmitter	
Pressure Type		
Standard		**Standard**
G	Gage	★
A	Absolute	★

Pressure Upper Range Limit - Configurable Description			
	3051TG[1]	**3051TA**	
Standard			**Standard**
1	30 psi (2,1 bar)	30 psia (2,1 bar)	★
2	150 psi (10,3 bar)	150 psia (10,3 bar)	★
3	800 psi (55,2 bar)	800 psia (55,2 bar)	★
4	4000 psi (275,8 bar)	4000 psia (275,8 bar)	★
5	10000 psi (689,5 bar)	10000 psia (689,5 bar)	★
Transmitter Output			
Standard			**Standard**
A	4–20 mA with Digital Signal Based on HART Protocol		★
F	FOUNDATION fieldbus Protocol		★
W[2]	Profibus PA Protocol		★
Expanded			
M	Low-Power 1–5 Vdc with Digital Signal Based on HART Protocol		
Process Connection Style			
Standard			**Standard**
2B	1/2–14 NPT Female		★
2C	G½ A DIN 16288 Male (Available in SST for Range 1–4 only)		★
Expanded			
2F	Coned and Threaded, Compatible with Autoclave Type F-250-C *(Includes Gland and Collar, Available in SST for Range 5 only)*		
61	Non-threaded Instrument flange (Range 1-4 only)		
Isolating Diaphragm		**Process Connection Wetted Parts Material**	
Standard			**Standard**
2[3]	316L SST	316L SST	★
3[3]	Alloy C-276	Alloy C-276	★
Sensor Fill Fluid			
Standard			**Standard**
1	Silicone		★
2	Inert (Fluorinert® FC-43)		★

Housing Material		Conduit Entry Size	
Standard			**Standard**
A	Polyurethane-covered Aluminum	½–14 NPT	★
B	Polyurethane-covered Aluminum	M20 × 1.5 (CM20)	★
J	SST	½–14 NPT	★
K	SST	M20 × 1.5 (CM20)	★
Expanded			
D	Polyurethane-covered Aluminum	G½	
M	SST	G½	

A.5.2 Options (Include with selected model number)

PlantWeb Control Functionality		
Standard		**Standard**
A01	Advanced Control Function Block Suite	★
PlantWeb Diagnostic Functionality		
Standard		**Standard**
D01	FOUNDATION fieldbus Diagnostics Suite	★
Integral Assembly		
Standard		**Standard**
S5[(4)]	Assemble to Rosemount 306 Integral Manifold	★
Seal Assemblies		
Standard		**Standard**
S1[(4)]	Assemble to one Rosemount 1199 seal	★
Mounting Bracket		
Standard		**Standard**
B4	Bracket for 2-in. Pipe or Panel Mounting, All SST	★
Product Certifications		
Standard		**Standard**
C6	CSA Explosion-proof, Dust Ignition-proof, Intrinsically Safe, and Division 2	★
E2	INMETRO Flameproof	★
E3	China Flameproof	★
E4[(5)]	TIIS Flameproof	★

E5	FM Explosion-proof, Dust Ignition-proof	★
E7[5]	IECEx Flameproof, Dust Ignition-proof	★
E8	ATEX Flameproof and Dust	★
I1[5]	ATEX Intrinsic Safety and Dust	★
I2	INMETRO Intrinsic Safety	★
I3	China Intrinsic Safety	★
I5	FM Intrinsically Safe, Division 2	★
I7[5]	IECEx Intrinsic Safety	★
IA	ATEX Intrinsic Safety for FISCO; for *FOUNDATION* fieldbus protocol only	★
IE	FM FISCO Intrinsically Safe; for FOUNDATION fieldbus protocol only	★
K2	INMETRO Flameproof, Intrinsic Safety	★
K5	FM Explosion-proof, Dust Ignition-proof, Intrinsically Safe, and Division 2	★
K6[5]	CSA and ATEX Explosion-proof, Intrinsically Safe, and Division 2 (combination of C6 and K8)	★
K7[5]	IECEx Flameproof, Dust Ignition-proof, Intrinsic Safety, and Type n (combination of I7, N7, and E7)	★
K8[5]	ATEX Flame-proof, Intrinsic Safety, Type n, Dust (combination of E8, I1, and N1)	★
KB	FM and CSA Explosion-proof, Dust Ignition-proof, Intrinsically Safe, and Division 2 (combination of K5 and C6)	★
KD[5]	FM, CSA, and ATEX Explosion-proof, Intrinsically Safe (combination of K5, C6, I1, and E8)	★
N1[5]	ATEX Type n Certification and Dust	★
N3	China Type n	★
N7[5]	IECEx Type n Certification	★
Custody Transfer		
Standard		**Standard**
C5	Measurement Canada Accuracy Approval *(Limited availability depending on transmitter type and range. Contact an Emerson Process Management representative)*	★
Calibration Certification		
Standard		**Standard**
Q4	Calibration Certificate	★
QG	Calibration Certificate and GOST Verification Certificate	★
QP	Calibration Certification and tamper evident seal	★
Material Traceability Certification		
Standard		**Standard**
Q8	Material Traceability Certification per EN 10204 3.1 *NOTE: This option applies to the process connection only.*	★
Quality Certification for Safety		
Standard		**Standard**
QS	Certificate of FMEDA Data	★
QT	Safety certified to IEC 61508 with Certificate of FMEDA data	★

Zero/Span Adjustment		
Standard		**Standard**
J1[6][7]	Local Zero Adjustment Only	★
J3[6][7]	No Local Zero or Span Adjustment	★
Expanded		
D1	Hardware adjustments (zero, span, alarm, security)	
Display Type		
Standard		**Standard**
M4[8]	LCD Display with Local Operator Interface	★
M5	LCD display	★
M6	LCD display for SST Housing (Housing Codes J, K, L and M only)	★
Conduit Plug		
Standard		**Standard**
DO	316 SST Conduit Plug	★
Transient Terminal Block		
Standard		**Standard**
T1	Transient Protection Terminal Block	★
Software Configuration		
Standard		**Standard**
C1[6]	Custom Software Configuration (Completed CDS 00806-0100-4001 required with order)	★
Expanded		
C2[6]	0.8–3.2 Vdc Output with Digital Signal Based on *HART* Protocol (Output Code M only)	
Alarm Limit		
Standard		**Standard**
C4[7][9]	Analog Output Levels Compliant with NAMUR Recommendation NE 43, Alarm High	★
CN[7][9]	Analog Output Levels Compliant with NAMUR Recommendation NE 43, Low Alarm	★
CR	Custom alarm and saturation signal levels, high alarm	★
CS	Custom alarm and saturation signal levels, low alarm	★
CT	Low alarm (standard Rosemount alarm and saturation levels)	★
Pressure Testing		
Expanded		
P1	Hydrostatic Testing with Certificate	

Cleaning Process Area		
Expanded		
P2	Cleaning for Special Service	
P3	Cleaning for <1 PPM Chlorine/Fluorine	
High Accuracy		
Standard		**Standard**
P8	0.04% accuracy to 5:1 turndown (Range 2-4)	★
Ground Screw		
Standard		**Standard**
V5(10)	External Ground Screw Assembly	★
Drinking Water Approval		
Standard		**Standard**
DW	NSF drinking water approval	★
Surface Finish		
Standard		**Standard**
Q16	Surface finish certification for sanitary remote seals	★
Toolkit Total System Performance Reports		
Standard		**Standard**
QZ	Remote Seal System Performance Calculation Report	★
Conduit Electrical Connector		
Standard		**Standard**
GE	M12, 4-pin, Male Connector (eurofast®)	★
GM	A size Mini, 4-pin, Male Connector (minifast®)	★
Typical Model Number: 3051T G 5 F 2A 2 1 A B4		

(1) 3051TG lower range limit varies with atmospheric pressure.
(2) Option code M4 - LCD Display with Local Operator Interface required for local addressing and configuration.
(3) Materials of Construction comply with recommendations per NACE MR0175/ISO 15156 for sour oil field production environments. Environmental limits apply to certain materials. Consult latest standard for details. Selected materials also conform to NACE MR0103 for sour refining environments.
(4) "Assemble-to" items are specified separately and require a completed model number.
(5) Not available with low-power Option Code M.
(6) Not available with fieldbus (output code F) or Profibus protocols (output code W).
(7) Local zero and span adjustments are standard unless Option Code J1 or J3 is specified.
(8) Available only with output code W - Profibus PA.
(9) NAMUR-Compliant operation is pre-set at the factory and cannot be changed to standard operation in the field.
(10) The V5 option is not needed with T1 option; external ground screw assembly is included with the T1 option.

Model	Transmitter Type			
3051L	Liquid Level Transmitter			
Pressure Range				
Standard				**Standard**
2	–250 to 250 inH_2O (–0,6 to 0,6 bar)			★
3	–1000 to 1000 inH_2O (–2,5 to 2,5 bar)			★
4	–300 to 300 psi (–20,7 to 20,7 bar)			★
Transmitter Output				
Standard				**Standard**
A	4–20 mA with Digital Signal Based on *HART* Protocol			★
F	FOUNDATION fieldbus Protocol			★
W[(1)]	Profibus PA Protocol			★
Expanded				
M[(2)]	Low-Power 1–5 Vdc with Digital Signal Based on *HART* Protocol (See Option Code C2 for 0.8–3.2 Vdc Output)			
Process Connection Size, Material, Extension length (High Side)				
Standard				**Standard**
Code	**Process Connection Size**	**Material**	**Extension Length**	★
G0[(3)]	2-in./DN 50	316L SST	Flush Mount Only	★
H0[(3)]	2-in./DN 50	Alloy C-276	Flush Mount Only	★
J0	2-in./DN 50	Tantalum	Flush Mount Only	★
A0[(3)]	3-in./DN 80	316L SST	Flush Mount	★
A2[(3)]	3-in./DN 80	316L SST	2-in./50 mm	★
A4[(3)]	3-in./DN 80	316L SST	4-in./100 mm	★
A6[(3)]	3-in./DN 80	316L SST	6-in./150 mm	★
B0[(3)]	4-in./DN 100	316L SST	Flush Mount	★
B2[(3)]	4-in./DN 100	316L SST	2-in./50 mm	★
B4[(3)]	4-in./DN 100	316L SST	4-in./100 mm	★
B6[(3)]	4-in./DN 100	316L SST	6-in./150 mm	★
C0[(3)]	3-in./DN 80	Alloy C-276	Flush Mount	★
C2[(3)]	3-in./DN 80	Alloy C-276	2-in./50 mm	★
C4[(3)]	3-in./DN 80	Alloy C-276	4-in./100 mm	★
C6[(3)]	3-in./DN 80	Alloy C-276	6-in./150 mm	★
D0[(3)]	4-in./DN 100	Alloy C-276	Flush Mount	★
D2[(3)]	4-in./DN 100	Alloy C-276	2-in./50 mm	★

D4[3]	4-in./DN 100	Alloy C-276	4-in./100 mm	★
D6[3]	4-in./DN 100	Alloy C-276	6-in./150 mm	★
E0	3-in./DN 80	Tantalum	Flush Mount Only	★
F0	4-in./DN 100	Tantalum	Flush Mount Only	★
Mounting Flange Size, Rating, Material (High Side)				
	Size	**Rating**	**Material**	
Standard				**Standard**
M	2-in.	ANSI/ASME B16.5 Class 150	CS	★
A	3-in.	ANSI/ASME B16.5 Class 150	CS	★
B	4-in.	ANSI/ASME B16.5 Class 150	CS	★
N	2-in.	ANSI/ASME B16.5 Class 300	CS	★
C	3-in.	ANSI/ASME B16.5 Class 300	CS	★
D	4-in.	ANSI/ASME B16.5 Class 300	CS	★
P	2-in.	ANSI/ASME B16.5 Class 600	CS	★
E	3-in.	ANSI/ASME B16.5 Class 600	CS	★
X[3]	2-in.	ANSI/ASME B16.5 Class 150	SST	★
F[3]	3-in.	ANSI/ASME B16.5 Class 150	SST	★
G[3]	4-in.	ANSI/ASME B16.5 Class 150	SST	★
Y[3]	2-in.	ANSI/ASME B16.5 Class 300	SST	★
H[3]	3-in.	ANSI/ASME B16.5 Class 300	SST	★
J[3]	4-in.	ANSI/ASME B16.5 Class 300	SST	★
Z[3]	2-in.	ANSI/ASME B16.5 Class 600	SST	★
L[3]	3-in.	ANSI/ASME B16.5 Class 600	SST	★
Q	DN 50	PN 10-40 per EN 1092-1	CS	★
R	DN 80	PN 40 per EN 1092-1	CS	★
S	DN 100	PN 40 per EN 1092-1	CS	★
V	DN 100	PN 10/16 per EN 1092-1	CS	★
K[3]	DN 50	PN 10-40 per EN 1092-1	SST	★
T[3]	DN 80	PN 40 per EN 1092-1	SST	★
U[3]	DN 100	PN 40 per EN 1092-1	SST	★
W[3]	DN 100	PN 10/16 per EN 1092-1	SST	★
7[3]	4 in.	ANSI/ASME B16.5 Class 600	SST	★
Expanded				
1	—	10K per JIS B2238	CS	
2	—	20K per JIS B2238	CS	
3	—	40K per JIS B2238	CS	
4[3]	—	10K per JIS B2238	316 SST	

5[(3)]	—	20K per JIS B2238		316 SST	
6[(3)]	—	40K per JIS B2238		316 SST	
Process Fill-High Pressure Side		**Specific Gravity**	**Temperature Limits (Ambient Temperature of 70 °F (21 °C))**		
Standard					**Standard**
A	Syltherm XLT	0.85	-102 to 293 °F (-75 to 145 °C)		★
C	Silicone 704	1.07	32 to 401 °F (0 to 205 °C)		★
D	Silicone 200	0.93	-49 to 401 °F (-45 to 205 °C)		★
H	Inert (Halocarbon)	1.85	-49 to 320 °F (-45 to 160 °C)		★
G	Glycerine and Water	1.13	5 to 203 °F (-15 to 95 °C)		★
N	Neobee M-20	0.92	5 to 401 °F (-15 to 205 °C)		★
P	Propylene Glycol and Water	1.02	5 to 203 F (-15 to 95 °C)		★
Low Pressure Side					
	Configuration	**Flange Adapter**	**Diaphragm Material**	**Sensor Fill Fluid**	
Standard					**Standard**
11[(3)]	Gage	SST	316L SST	Silicone	★
21[(3)]	Differential	SST	316L SST	Silicone	★
22[(3)]	Differential	SST	Alloy C-276	Silicone	★
2A[(3)]	Differential	SST	316L SST	Inert (Halocarbon)	★
2B[(3)]	Differential	SST	Alloy C-276	Inert (Halocarbon)	★
31[(3)]	Tuned-System Assembly with Remote Seal	None	316L SST	Silicone *(Requires Option Code S1)*	★
O-ring					
Standard					**Standard**
A	Glass-filled PTFE				★
Housing Material			**Conduit Entry Size**		
Standard					**Standard**
A	Aluminum		½–14 NPT		★
B	Aluminum		M20 × 1.5		★
J	SST		½–14 NPT		★
K	SST		M20 × 1.5		★

Expanded			
D	Aluminum	G½	
M	SST	G½	

A.5.3 Options (Include with selected model number)

PlantWeb Control Functionality		
Standard		**Standard**
A01	FOUNDATION fieldbus Advanced Control Function Block Suite	★
PlantWeb Diagnostic Functionality		
Standard		**Standard**
D01	FOUNDATION fieldbus Diagnostics Suite	★
Seal Assemblies		
Standard		**Standard**
S1[(4)]	Assembled to One Rosemount 1199 Seal (Requires 1199M)	★
Product Certifications		
Standard		**Standard**
E5	FM Explosion-proof, Dust Ignition-proof	★
I5	FM Intrinsically Safe, Division 2	★
K5	FM Explosion-proof, Dust Ignition-proof, Intrinsically Safe, and Division 2	★
I1[(5)]	ATEX Intrinsic Safety and Dust	★
N1[(5)]	ATEX Type n Certification and Dust	★
E8	ATEX Flameproof and Dust	★
E4[(5)]	TIIS Flameproof	★
C6	CSA Explosion-proof, Dust Ignition-proof, Intrinsically Safe, and Division 2	★
K6[(5)]	CSA and ATEX Explosion-proof, Intrinsically Safe, and Division 2 (combination of C6 and K8)	★
KB	FM and CSA Explosion-proof, Dust Ignition-proof, Intrinsically Safe, and Division 2 (combination of K5 and C6)	★
K7[(5)]	IECEx Flameproof, Dust Ignition-proof, Intrinsic Safety, and Type n (combination of I7, N7, and E7)	★
K8[(5)]	ATEX Flame-proof and Intrinsic Safety Approvals (combination of I1 and E8)	★
KD[(5)]	FM, CSA, and ATEX Explosion-proof, Intrinsically Safe (combination of K5, C6, I1, and E8)	★

I7[5]	IECEx Intrinsic Safety	★
E7[5]	IECEx Flameproof, Dust Ignition-proof	★
N7[5]	IECEx Type n Certification	★
IA	ATEX FISCO Intrinsic Safety	★
IE	FM FISCO Intrinsically Safe	★
E2	INMETRO Flameproof	★
I2	INMETRO Intrinsic Safety	★
K2	INMETRO Flameproof, Intrinsic Safety	★
E3	China Flameproof	★
I3	China Intrinsic Safety	★
N3	China Type n	★
Bolting Material		
Standard		**Standard**
L4	Austenitic 316 SST Bolts	★
L5	ASTM A 193, Grade B7M bolts	★
L6	Alloy K-500 Bolts	★
L8	ASTM A 193 Class 2, Grade B8M Bolts	★
Display Type		
Standard		**Standard**
M4[6]	LCD Display with Local Operator Interface	★
M5	LCD Display for Aluminum Housing (Housing Codes A, B, C, and D only)	★
M6	LCD Display for SST Housing (Housing Codes J, K, L, and M only)	★
Calibration Certification		
Standard		**Standard**
Q4	Calibration Certificate	★
QP	Calibration Certificate and tamper evident seal	★
QG	Calibration Certificate and GOST Verification Certificate	★
Material Traceability Certification		
Standard		**Standard**
Q8	Material Traceability Certification per EN 10204 3.1	★
Quality Certification for Safety		
Standard		**Standard**
QS[7]	Prior-use certificate of FMEDA data	★

Toolkit Total System Performance Reports		
Standard		**Standard**
QZ	Remote Seal System Performance Calculation Report	★
Conduit Electrical Connector		
Standard		**Standard**
GE	M12, 4-pin, Male Connector (eurofast®)	★
GM	A size Mini, 4-pin, Male Connector (minifast®)	★
Hardware Adjustments		
Standard		**Standard**
J1[8][9]	Local Zero Adjustment Only	★
J3[8][9]	No Local Zero or Span Adjustment	★
Transient Protection		
Standard		**Standard**
T1[10]	Transient Protection Terminal Block	★
Software Configuration		
Standard		**Standard**
C1[8]	Custom Software Configuration (Completed CDS 00806-0100-4001 required with order)	★
Low Power Output		
Standard		**Standard**
C2[8]	0.8–3.2 Vdc Output with Digital Signal Based on HART Protocol (Available with Output code M only)	★
Alarm Limit		
Standard		**Standard**
C4[8][11]	NAMUR alarm and saturation levels, high alarm	★
CN[8][11]	NAMUR alarm and saturation levels, low alarm	★
CR	Custom alarm and saturation signal levels, high alarm	★
CS	Custom alarm and saturation signal levels, low alarm	★
CT	Low alarm (standard Rosemount alarm and saturation levels)	★
Conduit Plug		
Standard		**Standard**
D0	316 SST Conduit Plug	★
Ground Screw		
Standard		**Standard**
V5[12]	External Ground Screw Assembly	★

Lower Housing Flushing Connection Options				
	Ring Material	**Number**	**Size (NPT)**	
Standard				**Standard**
F1	316 SST	1	1/4-18 NPT	★
F2	316 SST	2	1/4-18 NPT	★
F3	Alloy C-276	1	1/4-18 NPT	★
F4	Alloy C-276	2	1/4-18 NPT	★
F7	316 SST	1	1/2-14 NPT	★
F8	316 SST	2	1/2-14 NPT	★
F9	Alloy C-276	1	1/2-14 NPT	★
F0	Alloy C-276	2	1/2-14 NPT	★
Typical Model Number: 3051L 2 A A0 D 21 A A F1				

(1) Option code M4 - LCD Display with Local Operator Interface required for local addressing and configuration.
(2) Not available with hazardous certification Option Codes I1, N1, E4, K6, and K8.
(3) Materials of Construction comply with metallurgical requirements highlighted within NACE MR0175/ISO 15156 for sour oil field production environments. Environmental limits apply to certain materials. Consult latest standard for details. Selected materials also conform to NACE MR0103 for sour refining environments.
(4) "Assemble-to" items are specified separately and require a completed model number.
(5) Not available with low-power Option Code M
(6) Available only with output code W - Profibus PA.
(7) Only available with HART 4-20 mA output (output code A).
(8) Not available with fieldbus (output code F) or profibus protocols (output code W).
(9) Local zero and span adjustments are standard unless Option Code J1 or J3 is specified.
(10) The T1 option is not needed with FISCO Product Certifications; transient protection is included in the FISCO product certification codes IA, IE, IF, and IG.
(11) NAMUR-Compliant operation is pre-set at the factory and cannot be changed to standard operation in the field.
(12) The V5 option is not needed with the T1 option; external ground screw assembly is included with the T1 option.

Model	**Transmitter Type (Select One)**		**HD**	**HG**	
3051HD	Differential Pressure Transmitter for High Temperature Processes		•	—	
3051HG	Gage Pressure Transmitter High-Temperature Processes		•—	••	
Code	**Pressure Ranges (Range/ Min. Span)**				
	3051HD	3051HG			
2	–250 to 250 inH_2O/2.5 inH_2O (–0,62 to 0,62 bar/6,2 mbar)	–250 to 250 inH_2O/2.5 inH_2O (–0,62 to 0,62 bar/6,2 mbar)			
3	–1000 to 1000 inH_2O/10 inH_2O (–2,5 to 2,5 bar/25 mbar)	–407 to 1000 inH_2O/10in H_2O (–1,01 to 2,5 bar/25 mbar)			
4	–300 to 300 psi (–20,7 to 20,7 bar/0.2 bar)	–14.7 to 300 psi/3 psi (–1,01 to 20,7 bar/0,2 bar)			
5	–2000 to 2000 psi (–138 to 138 bar/1,4 bar)	–14.7 to 2000 psi/20 psi (–1,01 to 138 bar/1,4 bar)			
NOTE: 3051HG lower range limit varies with atmospheric pressure.					
Code	**Output**		**HD**	**HG**	
Expanded					
A	4–20 mA with Digital Signal Based on HART Protocol		••	••	
F	FOUNDATION fieldbus Protocol		••	••	

M[1]	Low-Power, 1–5 Vdc with Digital Signal Based on HART Protocol		• •	• •	
W	Profibus – PA		••	••	
Code	**Process Connection**		**HD**	**HG**	
	Process Flange Material	Drain/Vent			
2	SST	SST	• •	• •	
7[2]	SST	Alloy C-276	••	••	
Code	**Process Isolating Diaphragm**		**HD**	**HG**	
2	316L SST		• •	• •	
3[2]	Alloy C-276		• •	• •	
5	Tantalum		••	••	
Code	**O-ring Material**		**HD**	**HG**	
Expanded					
A	Glass-Filled PTFE		• •	• •	
Code	**Process Fill Fluid**		**HD**	**HG**	
Expanded					
D	*D.C. 200* Silicone		• •	• •	
H	Inert		• •	• •	
N	*Neobee M-20*		••	••	
P	Propylene glyco/water		• •	• •	
Code	**Sensor Module Isolator Material**		**HD**	**HG**	
Expanded					
2	316L SST		• •	• •	
Code	**Sensor Module Fill Fluid**		**HD**	**HG**	
Expanded					
1	Silicone		• •	• •	
2	Inert fill (Halocarbon)		• •	• •	
Code	**Housing Material**	**Conduit Entry Size**	**HD**	**HG**	
Expanded					
A	Polyurethane-covered Aluminum	½–14 NPT	•	•	
B	Polyurethane-covered Aluminum	M20 × 1.5 (CM20)	•	••	
D	Polyurethane-covered Aluminum	G½	•	••	
J	SST	½–14 NPT	•	•	
K	SST	M20 × 1.5 (CM20)	•	••	
M	SST	G½	••	••	

A.5.4 Options (Include with selected model number)

Code	***PlantWeb* Control Anywhere Software**	HD	HG	
Expanded				
A01	Advanced Control Function Block Suite • •	• •	• •	
Code	***PlantWeb* Advanced Diagnostic Software**	**HD**	**HG**	
Expanded				
D01	FOUNDATION fieldbus Diagnostics Suite	• •	• •	
Code	**Integral Mount Primary Elements (Optional)**	**HD**	**HG**	
Expanded				
S4[3]	Assemble to Rosemount Annubar or Rosemount 1195 Integral Orifice	• • •	— •—	
Code	**Mounting Bracket Options**	**HD**	**HG**	
Expanded				
B5	Universal Mounting Bracket for 2-in. Pipe or Panel Mount, CS Bolts	• •	• •	
B6	Universal Mounting Bracket for 2-in. Pipe or Panel Mount, SST Bolts	••	••	
Code	**Product Certifications (Optional)**	**HD**	**HG**	
Expanded				
C6	CSA Explosion-proof, Dust Ignition-proof, Intrinsically Safe, and Division 2	•	•	
E4[5]	TIIS Flameproof	•	•	
E5	FM Explosion-proof, Dust Ignition-proof	•	•	
E7	IECEx Flameproof, Dust Ignition-proof	•	•	
E8	ATEX Flameproof and Dust Certification	•	•	
I1[4]	ATEX Intrinsic Safety and Dust	•	•	
I5	FM Intrinsically Safe, Division 2	•	•	
I7	IECEx Intrinsic Safety	•	•	
IA	ATEX FISCO Intrinsic Safety	•	•	
IE	FM FISCO Intrinsically Safe	•	•	
K5	FM Explosion-proof, Dust Ignition-proof, Intrinsically Safe, and Division 2	•	•	
K6[5]	CSA and ATEX Explosion-proof, Intrinsically Safe, and Division 2 (combination of C6 and K8)	•	•	
K7	SAA Flameproof, Dust Ignition-proof, Intrinsic Safety, and Type n (combination of I7, N7, and E7)	•	•	
K8[5]	ATEX Flameproof, Intrinsic Safety, Type n, Dust (combination of E8, I1, and N1)	•	•	
KB	FM and CSA Explosion-proof, Dust Ignition-Proof, Intrinsically Safe, and Division 2 (combination of K5 and C6)	•	•	
KD[5]	CSA, FM, and ATEX Explosion-proof and Intrinsically Safe (combination of K5, C6, I1, and E8)	•	•	
N1[5]	ATEX Type n Certification and Dust	•	•	

N7	IECEx Type n Certification	•	•	
E2	INMETRO Flameproof	—	•	
I2	INMETRO Intrinsic Safety	—	•	
K2	INMETRO Flameproof, Intrinsic Safety	—	•	
DW	NSF drinking water approval	•—	•	
Code	**Bolting Material**	**HD**	**HG**	
Expanded				
L4	Austenitic 316 SST Bolts	•	•••	
Code	**Display and Interface Options**	**HD**	**HG**	
Expanded				
M4	LCD Display with Local Operator Display	• •	• •	
M5	LCD Display for Aluminum Housing *(Housing codes A, B, C, and D only)*	• •	• •	
M6	LCD Display for SST Housing *(Housing codes J, K, L, and M only)*	•	•••	
Code	**Calibration Certification**	**HD**	**HG**	
Expanded				
Q4	Calibration Certificate	•	•	
QG	Calibration Certificate and GOST Verification Certificate	• •	• •	
QP	Calibration Certificate and tamper evident seal	• •	• •	
Code	**Material Traceability Certification**	**HD**	**HG**	
Expanded				
Q8	Material traceability certification per EN 10204 3.1	•	•	
Code	**Zero/Span Adjustment**	**HD**	**HG**	
Expanded				
J1[(5)(6)]	Local Zero Adjustment Only	•	•	
J3[(5)(6)]	No Local Zero or Span Adjustment	• •	• •	
Code	**Transient Terminal Block**	**HD**	**HG**	
Expanded				
T1	Transient Protection Terminal Block	•	•	
Code	**Software Configuration**	**HD**	**HG**	
Expanded				
C1[(5)]	Custom Software Configuration (Completed CDS 00806-0100-4001 required with order)	• •	• •	
Code	**Lower Power Output**	**HD**	**HG**	
Expanded				
C2[(5)]	0.8–3.2 Vdc Output with Digital Signal Based on HART Protocol *(Output Code M only)*	•	•	

Code	Alarm Limit	HD	HG	
Expanded				
C4[5][7]	Analog Output Levels Compliant with NAMUR Recommendation NE 43	• •	• •	
CN[5][7]	Analog Output Levels Compliant with NAMUR Recommendation NE 43: Alarm Configuration–Low	•	•	
Code	**Pressure Testing**	**HD**	**HG**	
Expanded				
P1	Hydrostatic Testing with Certificate	• •	• •	
Code	**Cleaning Process Area**	**HD**	**HG**	
Expanded				
P2	Cleaning for Special Service	•	•	
Code	**Flange Adapters**	**HD**	**HG**	
Expanded				
DF	1/2–14 NPT flange adapters—SST	• •	• •	
Code	**Vent/Drain Valves**	**HD**	**HG**	
Expanded				
D8	Ceramic Ball Drain/Vents	•	•	
Code	**Conduit Plug**	**HD**	**HG**	
Expanded				
DO	316 SST Conduit Plug	• •	• •	
Code	**Ground Screw**	**HD**	**HG**	
Expanded				
V5[8]	External Ground Screw Assembly	• •	• •	
Code	**Bar Code Tag**	**HD**	**HG**	
Expanded				
BT	Customer Specified Barcode Tag	• •	• •	
Code	**Quality Certification for Safety**	**HD**	**HG**	
Expanded				
QS	Certificate of FMEDA Data	• •	• •	
Code	**Conduit Electrical Connector**	**HD**	**HG**	
Expanded				
GE	M12, 4-pin, Male Connector (*eurofast*)	• •	• •	
GM	A size Mini, 4-pin, Male Connector (*minifast*)	• •	• •	

Code	A Number Specials	HD	HG	
Expanded				
Axxxx	Specials	• •	• •	
Typical Model Number: 3051HG 2 A 2 2 A H 2 1 A B5				

(1) Not available with hazardous certification Option Codes I1, N1, E4, K6, and K8.
(2) Materials of Construction comply with recommendations per NACE MR0175/ISO 15156 for sour oil field production environments. Environmental limits apply to certain materials. Consult latest standard for details. Selected materials also conform to NACE MR0103 for sour refining environments.
(3) "Assemble-to" items are specified separately and require a completed model number.
(4) Not available with Low Power code M.
(5) Not available with fieldbus (output code F) or profibus protocols (output code W).
(6) Local zero and span adjustments are standard unless Option Code J1 or J3 is specified.
(7) NAMUR-Compliant operation is pre-set at the factory and cannot be changed to standard operation in the field.
(8) The V5 option is not needed with the T1 option; external ground screw assembly is included with the T1 option.

A.6 Options

Standard Configuration

Unless otherwise specified, transmitter is shipped as follows:

Engineering units ***Differential/Gage*:** ***Absolute/3051T*:**	inH_2O (Range 0, 1, 2, and 3) psi (Range 4 and 5) psi (all ranges)
4 mA (1 Vdc)[(1)]:	0 (engineering units above)
20 mA (5 Vdc):	Upper range limit
Output:	Linear
Flange type:	Specified model code option
Flange material:	Specified model code option
O-ring material:	Specified model code option
Drain/vent:	Specified model code option
Integral meter:	Installed or none
Alarm[(1)]:	Upscale
Software tag:	(Blank)

(1) Not applicable to fieldbus.

Custom Configuration HART protocol only[(1)]

If Option Code C1 is ordered, the customer may specify the following data in addition to the standard configuration parameters.

- Output Information
- Transmitter Information
- LCD display Configuration
- Hardware Selectable Information
- Signal Selection

Refer to the “HART Protocol C1 Option Configuration Data Sheet” document number 00806-0100-4001.

(1)Not applicable to fieldbus.

Tagging (3 options available)

- Standard SST hardware tag is wired to the transmitter. Tag character height is 0.125 in. (3,18 mm), 56 characters maximum.
- Tag may be permanently stamped on transmitter nameplate upon request, 56 characters maximum.
- Tag may be stored in transmitter memory (30 characters maximum). Software tag is left blank unless specified.

Commissioning tag (fieldbus only)

A temporary commissioning tag is attached to all transmitters. The tag indicates the device ID and allows an area for writing the location.

Optional Rosemount 304, 305, or 306 Integral Manifolds

Factory assembled to 3051C and 3051T transmitters. Refer to the following Product Data Sheet (document number 00813-0100-4839 for Rosemount 304 and 00813-0100-4733 for Rosemount 305 and 306) for additional information.

Optional Diaphragm and Sanitary Seals

Refer to Product Data Sheet 00813-0100-4016 or 00813-0201-4016 for additional information.

Output Information(1)

Output range points must be the same unit of measure. Available units of measure include:

inH2O	inH2O@4 °C(1)	psi	Pa
inHg	ftH2O	bar	kPa
mmH2O	mmH2O@4 °C(1)	mbar	torr
mmHg	g/cm2	kg/cm2	atm

(1) Not available on low power or previous versions.

LCD display

M5 Digital Display, 5-Digit, 2-Line LCD

- Direct reading of digital data for higher accuracy
- Displays user-defined flow, level, volume, or pressure units
- Displays diagnostic messages for local troubleshooting
- 90-degree rotation capability for easy viewing

M6 Digital Display with 316 Stainless Steel Cover

- For use with stainless steel housing option (housing codes J, K, and L)

Local Span and Zero Adjustment[(1)]

Transmitters ship with local span and zero adjustments standard unless otherwise specified.

- Non-interactive external zero and span adjustments ease calibration
- Magnetic switches replace standard potentiometer adjustments to optimize performance

J1 Local Zero Adjustment Only[(1)]

J3 No Local Zero or Span Adjustment[(1)]

Bolts for Flanges and Adapters

- Options permit bolts for flanges and adapters to be obtained in various materials
- Standard material is plated carbon steel per ASTM A449, Type 1

L4 Austenitic 316 Stainless Steel Bolts

L5 ASTM A 193, Grade B7M Bolts

L6 Alloy K-500 Bolts

Rosemount 3051C Coplanar Flange and 3051T Bracket Option

B4 Bracket for 2-in. Pipe or Panel Mounting

- For use with the standard Coplanar flange configuration
- Bracket for mounting of transmitter on 2-in. pipe or panel
- Stainless steel construction with stainless steel bolts

Rosemount 3051H Bracket Options

B5 Bracket for 2-in. Pipe or Panel Mounting

- For use with the 3051H Pressure Transmitter for high process temperatures
- Carbon steel construction with carbon steel bolts

B6 B5 Bracket with SST Bolts

- Same bracket as the B5 option with Series 300 stainless steel bolts.

Traditional Flange Bracket Options

B1 Bracket for 2-in. Pipe Mounting

- For use with the traditional flange option
- Bracket for mounting on 2-in. pipe
- Carbon steel construction with carbon steel bolts
- Coated with polyurethane paint

(1)Not applicable to fieldbus.

B2 Bracket for Panel Mounting

- For use with the traditional flange option
- Bracket for mounting transmitter on wall or panel
- Carbon steel construction with carbon steel bolts
- Coated with polyurethane paint

B3 Flat Bracket for 2-in. Pipe Mounting

- For use with the traditional flange option
- Bracket for vertical mounting of transmitter on 2-in. pipe
- Carbon steel construction with carbon steel bolts
- Coated with polyurethane paint

B7 B1 Bracket with SST Bolts

- Same bracket as the B1 option with Series 300 stainless steel bolts

B8 B2 Bracket with SST Bolts

- Same bracket as the B2 option with Series 300 stainless steel bolts

B9 B3 Bracket with SST Bolts

- Same bracket as the B3 option with Series 300 stainless steel bolts

BA Stainless Steel B1 Bracket with SST Bolts

- B1 bracket in stainless steel with Series 300 stainless steel bolts

BC Stainless Steel B3 Bracket with SST Bolts

- B3 bracket in stainless steel with Series 300 stainless steel bolts

Shipping weights

Table A-6. Transmitter weights without options

Transmitter	Add weight In lb (kg)
3051C	6.0 (2,7)
3051L	Table A-7
3051H	13.6 (6,2)
3051T	3.0 (1,4)

Table A-7. 3051L weights without options

Flange	Flush lb. (kg)	2-in. Ext. lb (kg)	4-in. Ext. lb (kg)	6-in. Ext. lb (kg)
2-in., 150	12.5 (5,7)	—	—	—
3-in., 150	17.5 (7,9)	19.5 (8,8)	20.5 (9,3)	21.5 (9,7)
4-in., 150	23.5 (10,7)	26.5 (12,0)	28.5 (12,9)	30.5 (13,8)
2-in., 300	17.5 (7,9)	—	—	—
3-in., 300	22.5 (10,2)	24.5 (11,1)	25.5 (11,6)	26.5 (12,0)
4-in., 300	32.5 (14,7)	35.5 (16,1)	37.5 (17,0)	39.5 (17,9)
2-in., 600	15.3 (6,9)	—	—	—
3-in., 600	25.2 (11,4)	27.2 (12,3)	28.2 (12,8)	29.2 (13,2)
DN 50/PN 40	13.8 (6,2)	—	—	—
DN 80/PN 40	19.5 (8,8)	21.5 (9,7)	22.5 (10,2)	23.5 (10,6)
DN 100/ PN 10/16	17.8 (8,1)	19.8 (9,0)	20.8 (9,5)	21.8 (9,9)
DN 100/ PN 40	23.2 (10,5)	25.2 (11,5)	26.2 (11,9)	27.2 (12,3)

Table A-8. Transmitter options weights

Code	Option	Add lb (kg)
J, K, L, M	Stainless Steel Housing(T)	3.9 (1,8)
J, K, L, M	Stainless Steel Housing (C, L, H, P)	3.1 (1,4)
M5	LCD display for Aluminum Housing	0.5 (0,2)
M6	LCD display for SST Housing	1.25 (0,6)
B4	SST Mounting Bracket for Coplanar Flange	1.0 (0,5)
B1 B2 B3	Mounting Bracket for Traditional Flange	2.3 (1,0)
B7 B8 B9	Mounting Bracket for Traditional Flange	2.3 (1,0)
BA, BC	SST Bracket for Traditional Flange	2.3 (1,0)
B5 B6	Mounting Bracket for 3051H	2.9 (1,3)
H2	Traditional Flange	2.4 (1,1)
H3	Traditional Flange	2.7 (1,2)
H4	Traditional Flange	2.6 (1,2)
H7	Traditional Flange	2.5 (1,1)
FC	Level Flange—3 in., 150	10.8 (4,9)
FD	Level Flange—3 in., 300	14.3 (6,5)
FA	Level Flange—2 in., 150	10.7 (4,8)
FB	Level Flange—2 in., 300	14.0 (6,3)

Table A-8. Transmitter options weights

Code	Option	Add lb (kg)
FP	DIN Level Flange, SST, DN 50, PN 40	8.3 (3,8)
FQ	DIN Level Flange, SST, DN 80, PN 40	13.7 (6,2)

Table A-9. 3051C differential/gage pressure transmitter range limits

	Range 1 span		Range 2 span		Range 3 span		Range 4 span		Range 5 span	
Units	**min**	**max**	**min**	**max**	**min**	**max**	**min**	**max**	**min**	**max**
inH_2O	0.5	25	2.5	250	10	1000	83.040	8304	553.60	55360
inHg	0.03678	1.8389	0.18389	18.389	0.73559	73.559	6.1081	610.81	40.720	4072.04
ftH_2O	0.04167	2.08333	0.20833	20.8333	0.83333	83.3333	6.9198	691.997	46.13	4613.31
mmH_2O	12.7	635.5	63.553	6355	254	25421	2110.95	211095	14073	1407301
mmHg	0.93416	46.7082	4.67082	467.082	18.6833	1868.33	155.145	15514.5	1034.3	103430
psi	0.01806	0.903	0.0902	9.03183	0.36127	36.127	3	300	20	2000
bar	0.00125	0.06227	0.00623	0.62272	0.02491	2.491	0.20684	20.6843	1.37895	137.895
mbar	1.2454	62.2723	6.22723	622.723	24.9089	2490.89	206.843	20684.3	1378.95	137895
g/cm^2	1.26775	63.3875	6.33875	633.875	25.355	2535.45	210.547	21054.7	1406.14	140614
kg/cm^2	0.00127	0.0635	0.00635	0.635	0.0254	2.54	0.21092	21.0921	1.40614	140.614
Pa	124.545	6227.23	622.723	62160.6	2490.89	249089	20684.3	2068430	137895	13789500
kPa	0.12545	6.2272	0.62272	62.2723	2.49089	249.089	20.6843	2068.43	137.895	13789.5
torr	0.93416	46.7082	4.67082	467.082	18.6833	1868.33	155.145	15514.5	1034.3	103430
atm	0.00123	0.06146	0.00615	0.61460	0.02458	2.458	0.20414	20.4138	1.36092	136.092

When using a Field Communicator, ±5% adjustment is allowed on the sensor limit to allow for unit conversions.

Table A-10. 3051L/3051H pressure transmitter range limits

	Range 2 span		Range 3 span		Range 4 span		Range 5 span	
Units	**min**	**max**	**min**	**max**	**min**	**max**	**min**	**max**
inH_2O	2.5	250	10	1000	83.040	8304	553.60	55360
inHg	0.18389	18.389	0.73559	73.559	6.1081	610.81	40.720	4072.04
ftH_2O	0.20833	20.8333	0.83333	83.3333	6.9198	691.997	46.13	4613.31
mmH_2O	63.553	6355	254	25421	2110.95	211095	14073	1407301
mmHg	4.67082	467.082	18.6833	1868.33	155.145	15514.5	1034.3	103430
psi	0.0902	9.03183	0.36127	36.127	3	300	20	2000
bar	0.00623	0.62272	0.02491	2.491	0.20684	20.6843	1.37895	137.895
mbar	6.22723	622.723	24.9089	2490.89	206.843	20684.3	1378.95	137895
g/cm^2	6.33875	633.875	25.355	2535.45	210.547	21054.7	1406.14	140614
kg/cm^2	0.00635	0.635	0.0254	2.54	0.21092	21.0921	1.40614	140.614
Pa	622.723	62160.6	2490.89	249089	20684.3	2068430	137895	13789500
kPa	0.62272	62.2723	2.49089	249.089	20.6843	2068.43	137.895	13789.5
torr	4.67082	467.082	18.6833	1868.33	155.145	15514.5	1034.3	103430
atm	0.00615	0.61460	0.02458	2.458	0.20414	20.4138	1.36092	136.092

When using a Field Communicator, ±5% adjustment is allowed on the sensor limit to allow for unit conversions.

Table A-11. 3051T gage and absolute pressure transmitter range limits (cont. below with Ranges 3-5)

	Range 1 span		Range 2 span	
Units	**min**	**max**	**min**	**max**
inH_2O	8.30397	831.889	41.5198	4159.45
inHg	0.61081	61.0807	3.05403	305.403
ftH_2O	0.69199	69.3241	3.45998	345.998
mmH_2O	211.10	21130	1054.60	105460.3
mmHg	15.5145	1551.45	77.5723	7757.23
psi	0.3	30	1.5	150
bar	0.02068	2.06843	0.10342	10.3421
mbar	20.6843	2068.43	103.421	10342.11
g/cm^2	21.0921	2109.21	105.461	10546.1
kg/cm^2	0.02109	2.10921	0.10546	10.5461
Pa	2068.43	206843	10342.1	1034212
kPa	2.06843	206.843	10.3421	1034.21
torr	15.5145	1551.45	77.5726	7757.26
atm	0.02041	2.04138	0.10207	10.2069

When using a Field Communicator, ±5% adjustment is allowed on the sensor limit to allow for unit conversions.

Table A-12. 3051T gage and absolute pressure transmitter range limits (cont.)

	Range 3 span		Range 4 span		Range 5 span	
Units	**min**	**max**	**min**	**max**	**min**	**max**
inH_2O	221.439	22143.9	1107.2	110720	55360	276799
inHg	16.2882	1628.82	81.441	8144.098	4072.04	20360.2
ftH_2O	18.4533	1845.33	92.2663	9226.63	4613.31	23066.6
mmH_2O	5634.66	563466	28146.1	2814613	1407301	7036507
mmHg	413.72	41372	2068.6	206860.0	103430	517151
psi	8	800	40	4000	2000	10000
bar	0.55158	55.1581	2.75791	275.7905	137.895	689.476
mbar	551.581	55158.1	2757.91	275790.5	137895	689476
g/cm^2	561.459	56145.9	2807.31	280730.6	140614	703067
kg/cm^2	0.56246	56.2456	2.81228	281.228	140.614	701.82
Pa	55158.1	5515811	275791	27579054	13789500	68947600
kPa	55.1581	5515.81	275.791	27579.05	13789.5	68947.6
torr	413.721	413721	2068.6	206859.7	103430	517151
atm	0.54437	54.4368	2.72184	272.1841	136.092	680.46

When using a Field Communicator, ±5% adjustment is allowed on the sensor limit to allow for unit conversions.

Table A-13. 3051C absolute pressure transmitter range limits

	Range 1 span		Range 2 span		Range 3 span		Range 4 span	
Units	**min**	**max**	**min**	**max**	**min**	**max**	**min**	**max**
inH_2O	8.30397	831.889	41.5198	4151.98	221.439	22143.9	1107.2	110720
inHg	0.61081	61.0807	3.05403	305.403	16.2882	1628.82	81.441	8144.098
ftH_2O	0.69199	69.3241	3.45998	345.998	18.4533	1845.33	92.2663	9226.63
mmH_2O	211.10	21130	6.35308	635.308	5634.66	563466	28146.1	2814613
mmHg	15.5145	1551.45	1055.47	105547	413.72	41372	2068.6	206860.0
psi	0.3	30	1.5	150	8	800	40	4000
bar	0.02068	2.06843	0.10342	10.342	0.55158	55.1581	2.75791	275.7905
mbar	20.6843	2068.43	103.421	10342.1	551.581	55158.1	2757.91	275790.5
g/cm^2	21.0921	2109.21	105.27	105.27	561.459	56145.9	2807.31	280730.6
kg/cm^2	0.02109	2.10921	0.10546	10.546	0.56246	56.2456	2.81228	281.228
Pa	2068.43	206843	10342.1	1034210	55158.1	5515811	275791	27579054
kPa	2.06843	206.843	10.3421	1034.21	55.1581	5515.81	275.791	27579.05
torr	15.5145	1551.45	77.5726	7757.26	413.721	413721	2068.6	206859.7
atm	0.02041	2.04138	0.10207	10.207	0.54437	54.4368	2.72184	272.1841

When using a Field Communicator, ±5% adjustment is allowed on the sensor limit to allow for unit conversions.

A.7 Spare parts

Model 3051C Sensor Modules (Min. Span/Range)	Silicone Fill Part Number	Inert Fill Part Number
Note: One spare part is recommended for every 50 transmitters. *Note: Listed by Range and Process Isolator Order Numbers.*		
–3 to 3/0.1 inH2O, Range 0 (includes Traditional SST flange and SST bolts).		
316L SST	03031-1045-0002	03031-1145-0002
–25 to 25 inH_2O/0.5 inH_2O, Range 1		
316L SST	03031-1045-0012	03031-1145-0012
Alloy C-276	03031-1045-0013	03031-1145-0013
Alloy	03031-1045-0014	03031-1145-0014
Gold-plated *Alloy*	03031-1045-0016	03031-1145-0016
Gold-plated 316 SST	03031-1045-0017	03031-1145-0017
–250 to 250 inH_2O/2.5 inH_2O, Range 2		
316L SST	03031-1045-0022	03031-1145-0022
Alloy C-276	03031-1045-0022	03031-1145-0022
Alloy	03031-1045-0024	03031-1145-0024
Tantalum	03031-1045-0025	03031-1145-0025
Gold-plated *Alloy*	03031-1045-0026	03031-1145-0026
Gold-plated 316 SST	03031-1045-0027	03031-1145-0027
–1000 to 1000 inH_2O/10 inH_2O, Range 3		
316L SST	03031-1045-0032	03031-1145-0032
Alloy C-276	03031-1045-0033	03031-1145-0033
Alloy	03031-1045-0034	03031-1145-0034
Tantalum	03031-1045-0035	03031-1145-0035
Gold-plated *Alloy*	03031-1045-0036	03031-1145-0036
Gold-plated 316 SST	03031-1045-0037	03031-1145-0037
–300 to 300 psi/3 psi, Range 4		
316L SST	03031-1045-2042	03031-1145-2042
Alloy C-276	03031-1045-2043	03031-1145-2043
Alloy	03031-1045-2044	03031-1145-2044
Tantalum	03031-1045-2045	03031-1145-2045
Gold-plated *Alloy*	03031-1045-2046	03031-1145-2046
Gold-plated 316 SST	03031-1045-2047	03031-1145-2047

–2000 to 2000/20 psi, Range 5		
316L SST	03031-1045-2052	03031-1145-2052
Alloy C-276	03031-1045-2053	03031-1145-2053
Alloy	03031-1045-2054	03031-1145-2054
Tantalum	03031-1045-2055	03031-1145-2055
Gold-plated *Alloy*	03031-1045-2056	03031-1145-2056
Gold-plated 316 SST	03031-1045-2057	03031-1145-2057

Rosemount 3051C gage and differential sensor modules (Min. Span/Range)			Silicone fill	Inert fill
			Part number	Part number
Note: One spare part is recommended for every 50 transmitters. *Note: Listed by Range and Process Isolator Order Numbers.*				
	Gage pressure range	**Differential pressure range**		
Range 1	**–25 to 25 in H2O/0.5 in H2O**	**–25 to 25 in H2O/0.5 in H2O**		
316L SST			03031-1045-0012	03031-1145-0012
Alloy C-276			03031-1045-0013	03031-1145-0013
Alloy 400			03031-1045-0014	03031-1145-0014
Gold-plated Alloy 400			03031-1045-0016	03031-1145-0016
Gold-plated 316 SST			03031-1045-0017	03031-1145-0017
Range 2	**–250 to 250 inH_2O/2.5 inH_2O**	**–250 to 250 inH_2O/2.5 inH_2O**		
316L SST			03031-1045-0022	03031-1145-0022
Alloy C-276			03031-1045-0023	03031-1145-0023
Alloy 400			03031-1045-0024	03031-1145-0024
Tantalum			03031-1045-0025	03031-1145-0025
Gold-plated Alloy 400			03031-1045-0026	03031-1145-0026
Gold-plated 316 SST			03031-1045-0027	03031-1145-0027
Range 3	**–407 to 1000 inH_2O/10 inH_2O**	**-1000 to 1000 inH_2O/10 inH_2O**		
316L SST			03031-1045-0032	03031-1145-0032
Alloy C-276			03031-1045-0033	03031-1145-0033
Alloy 400			03031-1045-0034	03031-1145-0034
Tantalum			03031-1045-0035	03031-1145-0035
Gold-plated Alloy 400			03031-1045-0036	03031-1145-0036
Gold-plated 316 SST			03031-1045-0037	03031-1145-0037

Range 4	**–14.2 to 300 psi/3 psi**	**-300 to 300 psi/3 psi**		
316L SST			03031-1045-2042	03031-1145-2042
Alloy C-276			03031-1045-2043	03031-1145-2043
Alloy 400			03031-1045-2044	03031-1145-2044
Tantalum			03031-1045-2045	03031-1145-2045
Gold-plated Alloy 400			03031-1045-2046	03031-1145-2046
Gold-plated 316 SST			03031-1045-2047	03031-1145-2047
Range 5	**–14.2 to 2000 psi/20 psi**	**-2000 to 2000psi/20 psi**		
316L SST			03031-1045-2052	03031-1145-2052
Alloy C-276			03031-1045-2053	03031-1145-2053
Alloy 400			03031-1045-2054	03031-1145-2054
Tantalum			03031-1045-2055	03031-1145-2055
Gold-plated Alloy 400			03031-1045-2056	03031-1145-2056
Gold-plated 316 SST			03031-1045-2057	03031-1145-2057

Rosemount 3051C absolute sensor modules (Min. Span/Range)	**Silicone fill** **Part number**	**Inert fill** **Part number**
Note: One spare part is recommended for every 50 transmitters. *Note: Listed by Range and Process Isolator Order Numbers.*		
Range 1, 0 to 30 psia/0.3 psia		
316L SST	03031-2020-0012	—
Alloy C-276	03031-2020-0013	—
Alloy 400	03031-2020-0014	—
Gold-plated Alloy 400	03031-2020-0016	—
Gold-plated 316 SST	03031-2020-0017	—
Range 2, 0 to 150/1.5 psia		
316L SST	03031-2020-0022	—
Alloy C-276	03031-2020-0023	—
Alloy 400	03031-2020-0024	—
Gold-plated Alloy 400	03031-2020-0026	—
Gold-plated 316 SST	03031-2020-0027	—
Range 3, 0 to 800 psia/8 psia		
316L SST	03031-2020-0032	—
Alloy C-276	03031-2020-0033	—
Alloy 400	03031-2020-0034	—
Gold-plated Alloy 400	03031-2020-0036	—
Gold-plated 316 SST	03031-2020-0037	—

Range 4, 0 to 400 psia/40 psia		
316L SST	03031-2020-0042	—
Alloy C-276	03031-2020-0043	—
Alloy 400	03031-2020-0044	—
Gold-plated Alloy 400	03031-2020-0046	—
Gold-plated 316 SST	03031-2020-0047	—

Electronics board assemblies	Part number
4-20 mA HART Standard	03031-0001-0002
4-20 mA HART NAMUR compliant	03031-0001-0003
1-5 Vdc HART Low Power	03031-0001-1001
FOUNDATION fieldbus	03031-0001-2001
PROFIBUS PA fieldbus	03031-0001-2101
LCD display	**Part number**
LCD Display Kits	
4-20 mA HART - Aluminum	03031-0193-0101
4-20 mA HART - 316 SST	03031-0193-0111
1-5 Vdc HART Low Power - Aluminum	03031-0193-0001
1-5 Vdc HART Low Power - 316 SST	03031-0193-0011
Fieldbus (FOUNDATION or PROFIBUS PA) - Aluminum	03031-0193-0104
Fieldbus (FOUNDATION or PROFIBUS PA) - 316 SST	03031-0193-0112
LCD Display Only	
4-20 mA HART	03031-0193-0103
1-5 Vdc HART Low Power	03031-0193-0003
Fieldbus (FOUNDATION or PROFIBUS PA)	03031-0193-0105
Terminal block assemblies	**Part number**
4-20 mA HART Output	
Standard terminal block	03031-0332-0003
Transient terminal block (option T1)	03031-0332-0004
1-5 Vdc HART Low Power Output	
Standard terminal block	03031-0332-1001
Transient terminal block (option T1)	03031-0332-1002
Fieldbus (FOUNDATION or PROFIBUS PA)	
Standard terminal block	03031-0332-2001
Transient terminal block (option T1)	03031-0332-2002
FISCO terminal block	03031-0332-2005

Electrical housings (without terminal block)	Part number
Standard - Aluminum	
1/2 - 14 NPT conduit entry	03031-0635-0001
M20 conduit entry	03031-0635-0002
G1/2 conduit entry	03031-0635-0004
Standard - 316 SST	
1/2 - 14 NPT conduit entry	03031-0635-0041
M20 conduit entry	03031-0635-0042
1-5 Vdc HART Low Power - Aluminum	
1/2 - 14 NPT conduit entry	03031-0635-0101
1-5 Vdc HART Low Power - 316 SST	
1/2 - 14 NPT conduit entry	03031-0635-0141
Housing conduit plugs	**Part number**
1/2 NPT Conduit plug	03031-0544-0003
M20 Conduit plug	03031-0544-0001
G1/2 Conduit plug	03031-0544-0004
Housing covers (include o-ring)	**Part number**
Field terminal cover - Aluminum	03031-0292-0001
Field terminal cover - 316 SST	03031-0292-0002
HART electronics cover - Aluminum	03031-0292-0001
HART electronics cover - 316 SST	03031-0292-0002
HART LCD Display cover - Aluminum	03031-0193-0002
HART LCD Display cover - 316 SST	03031-0193-0012
Fieldbus extended electronics cover - Aluminum	03031-0292-0003
Fieldbus extended electronics cover - 316 SST	03031-0292-0004
Fieldbus extended LCD Display cover - Aluminum	03031-0193-0007
Fieldbus extended LCD Display cover - 316 SST	03031-0193-0013
Miscellaneous hardware	**Part number**
Local Zero and Span Kit	03031-0293-0002
External ground screw assembly (option V5)	03031-0398-0001
Flanges	**Part number**
Differential Coplanar Flange	
316 SST	03031-0388-0022
Cast C-276	03031-0388-0023
Cast Alloy 400	03031-0388-0024
Nickel-plated carbon steel	03031-0388-0025

Gage/Absolute Coplanar Flange	
316 SST	03031-0388-1022
Cast C-276	03031-0388-1023
Cast Alloy 40	03031-0388-1024
Nickel-plated carbon steel	03031-0388-1025
Coplanar flange alignment screw (package of 12)	03031-0309-0001
Traditional Flange	
316 SST	03031-0320-0002
Cast C-276	03031-0320-0003
Cast Alloy 400	03031-0320-0004
316 SST - DIN Compliant (Option Code HJ)	03031-1350-0012
Level Flange, Vertical Mount	
2 in., class 150, SST	03031-0393-0221
2 in., class 300, SST	03031-0393-0222
3 in., class 150, SST	03031-0393-0231
3 in., class 300, SST	03031-0393-0232
DIN, DN 50, PN 40	03031-0393-1002
DIN, DN 80, PN 40	03031-0393-1012
Flange adapter kits (each kit contains parts for one DP transmitter or two GP/AP transmitters)	**Part number**
CS bolts, glass-filled PTFE O-Rings	
SST adapters	03031-1300-0002
Cast Alloy C-276 adapters	03031-1300-0003
Alloy 400 adapters	03031-1300-0004
Nickel-plated carbon steel adapters	03031-1300-0005
SST bolts, glass-filled PTFE O-Rings	
SST adapters	03031-1300-0012
Cast Alloy C-276 adapters	03031-1300-0013
Alloy 400 adapters	03031-1300-0014
Nickel-plated carbon steel adapters	03031-1300-0015
CS bolts, graphite-filled PTFE O-Rings	
SST adapters	03031-1300-0102
Cast Alloy C-276 adapters	03031-1300-0103
Alloy 400 adapters	03031-1300-0104
Nickel-plated carbon steel adapters	03031-1300-0105
SST bolts, graphite-filled PTFE O-Rings	
SST adapters	03031-1300-0112
Cast Alloy C-276 adapters	03031-1300-0113

Alloy 400 adapters	03031-1300-0114
Nickel-plated carbon steel adapters	03031-1300-0115
Flange adapters	**Part number**
1/2 - 14 NPT Adapters	
316 SST	02024-0069-0002
Cast C-276	02024-0069-0003
Cast Alloy 400	02024-0069-0004
Nickel-plated carbon steel	02024-0069-0005
Socket Weld Adapters	
316 SST	02024-0069-1002
Cast C-276	02024-0069-1003
Cast Alloy 400	02024-0069-1004
O-Ring packages (package of 12)	**Part number**
Electronics housing, cover	03031-0232-0001
Electronics housing, module	03031-0233-0001
Process flange, glass-filled PTFE (White)	03031-0234-0001
Process flange, graphite-filled PTFE (Black)	03031-0234-0002
Process flange for 3051H, PTFE (White)	02051-0167-0001
Flange adapter, glass-filled PTFE (Light Brown)	03031-0242-0001
Flange adapter, graphite-filled PTFE (Black)	03031-0242-0002
Bolt kits	**Part number**
COPLANAR FLANGE	
Flange Bolt Kit {44mm (1.75 in.)} (set of 4)	
Carbon steel	03031-0312-0001
316 SST	03031-0312-0002
ASTM A 193, Grade B7M	03031-0312-0003
Alloy K-500	03031-0312-0004
Flange/Adapter Bolt Kit {73mm (2.88 in.)} (set of 4)	
Carbon steel	03031-0306-0001
316 SST	03031-0306-0002
ASTM A 193, Grade B7M	03031-0306-0003
Alloy K-500	03031-0306-0004

TRADITIONAL FLANGE	
Differential Flange/Adapter Bolt Kit {44mm (1.75 in.)} (set of 8)	
Carbon steel	03031-0307-0001
316 SST	03031-0307-0002
ASTM A 193, Grade B7M	03031-0307-0003
Alloy K-500	03031-0307-0004
Gage/Absolute Flange/Adapter Bolt Kit {44mm (1.75 in.)} (set of 6)	
Carbon steel	03031-0307-1001
316 SST	03031-0307-1002
ASTM A 193, Grade B7M	03031-0307-1003
Alloy K-500	03031-0307-1004
Conventional Manifold/Traditional Flange Bolts	
Carbon steel	Use bolts supplied with manifold
316 SST	Use bolts supplied with manifold
Level Flange, Vertical Mount Bolt Kit (Set of 4)	
Carbon steel	03031-0395-0001
316 SST	03031-0395-0002
3051H Process Flange Bolt Kit (Set of 4)	
Carbon Steel	02051-0164-0001
316 SST	02051-0164-0002
Drain/Vent valve kits (each kit contains parts for one transmitter)	**Part number**
Differential Drain/Vent Kits	
316 SST stem and seat kit	01151-0028-0022
Alloy C-276 stem and seat kit	01151-0028-0023
Alloy K-500 stem and Alloy 400 seat kit	01151-0028-0024
316 SST ceramic ball drain/vent kit	03031-0378-0022
Alloy C-276 ceramic ball drain/vent kit	03031-0378-0023
Alloy 400/K-500 ceramic ball drain/vent kit	03031-0378-0024
Gage/Absolute Drain/Vent Kits	
316 SST stem and seat kit	01151-0028-0012
Alloy C-276 stem and seat kit	01151-0028-0013
Alloy K-500 stem and Alloy 400 seat kit	01151-0028-0014
316 SST ceramic ball drain/vent kit	03031-0378-0012
Alloy C-276 ceramic ball drain/vent kit	03031-0378-0013
Alloy 400/K-500 ceramic ball drain/vent kit	03031-0378-0014

Mounting brackets	Part number
3051C and 3051L Coplanar Flange Bracket kit	
B4 bracket, SST, 2-in. pipe mount, SST bolts	03031-0189-0003
3051T Inline Bracket Kit	
B4 bracket, SST, 2-in. pipe mount, SST bolts	03031-0189-0004
3051C Traditional Flange Bracket Kits	
B1 bracket, 2-in. pipe mount, CS bolts	03031-0313-0001
B2 bracket, panel mount, CS bolts	03031-0313-0002
B3 flat bracket, 2-in. pipe mount, CS bolts	03031-0313-0003
B7 (B1 bracket, SST bolts)	03031-0313-0007
B8 (B2 bracket, SST bolts)	03031-0313-0008
B9 (B3 bracket, SST bolts)	03031-0313-0009
BA (SST B1 bracket, SST bolts)	03031-0313-0011
BC (SST B3 bracket, SST bolts)	03031-0313-0013
3051H Bracket Kits	
B5 universal bracket, 2-in. pipe and panel mount, CS bolts	03051-1081-0001
B6 universal bracket, 2-in. pipe and panel mount, SST bolts	03051-1081-0002
FOUNDATION fieldbus upgrade kit	**Part number**
Aluminum Housing	03031-0198-0001
316 SST Housing	03031-0198-0002

Figure A-1. Spare parts diagram

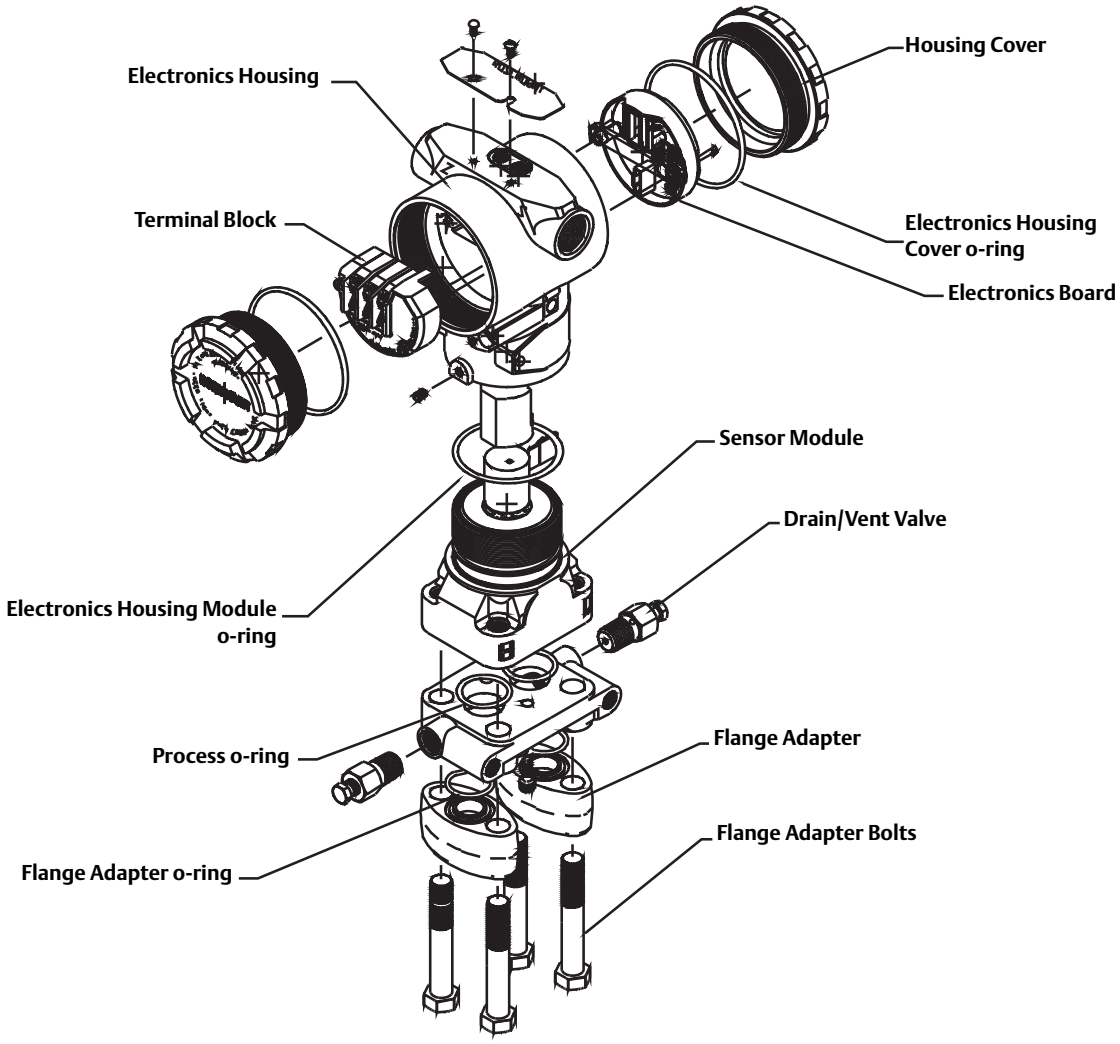

Appendix B Product certifications

Overview . . . . . page 175
Safety messages . . . . . page 175
Approved manufacturing locations . . . . . page 176
European directive information . . . . . page 176
Hazardous locations certifications . . . . . page 177
Approval drawings . . . . . page 184

B.1 Overview

This Appendix contains information on Approved manufacturing locations, European directive information, Ordinary Location certification, Hazardous Locations Certifications and approval drawings for HART protocol.

B.2 Safety messages

Procedures and instructions in this section may require special precautions to ensure the safety of the personnel performing the operations. Information that raises potential safety issues is indicated by a warning symbol (⚠). Refer to the following safety messages before performing an operation preceded by this symbol.

B.2.1 Warnings

⚠ WARNING

Explosions could result in death or serious injury:

Installation of this transmitter in an explosive environment must be in accordance with the appropriate local, national, and international standards, codes, and practices. Please review this section of the Model 3051 reference manual for any restrictions associated with a safe installation.

- Before connecting a HART-based communicator in an explosive atmosphere, make sure the instruments in the loop are installed in accordance with intrinsically safe or non-incendive field wiring practices.
- In an Explosion-Proof/Flameproof installation, do not remove the transmitter covers when power is applied to the unit.

Process leaks may cause harm or result in death.

- Install and tighten process connectors before applying pressure.

Electrical shock can result in death or serious injury.

- Avoid contact with the leads and terminals. High voltage that may be present on leads can cause electrical shock.

⚠ WARNING

Cable gland and plug must comply with the requirements listed on the certificates.

B.3 Approved manufacturing locations

Emerson Process Management - Rosemount Inc. — Chanhassen, Minnesota, USA
Emerson Process Management — Wessling, Germany
Emerson Process Management Asia Pacific Private Limited — Singapore
Emerson Process Management — Beijing, China
Emerson Process Management — Daman, India

B.4 European directive information

The most recent revision of the EC declaration of conformity can be found at www.emersonprocess.com.

B.4.1 Ordinary location certification for factory mutual

As standard, the transmitter has been examined and tested to determine that the design meets basic electrical, mechanical, and fire protection requirements by FM, a nationally recognized testing laboratory (NRTL) as accredited by the Federal Occupational Safety and Health Administration (OSHA).

B.5 Hazardous locations certifications

B.5.1 North american certifications

FM Approvals

E5 Explosion-Proof and Dust Ignition Proof
Certificate No: 0T2H0.AE
Applicable Standards: FM Class 3600 – 1998, FM Class 3615 – 2006, FM Class 3810 – 2005, ANSI/NEMA 250 - 2003

Markings: Explosion-Proof for Class I, Division 1, Groups B, C, and D.

Dust-Ignition-Proof for Class II, Division 1, Groups E, F, G; and Class III, Division 1.
T5 (Ta = -50 °C to +85 °C), Factory Sealed, Enclosure Type 4x

I5 Intrinsically Safe and Non-Incendive
Certificate No: 1Q4A4.AX
Applicable Standards: FM Class 3600 – 1998, FM Class 3610 – 2010, FM Class 3611 – 2004, FM Class 3810 – 2005
Markings: Intrinsically Safe for use in Class I, Division 1, Groups A, B, C, and D; Class II, Division 1, Groups E, F, and G; Class III, Division 1 when connected per Rosemount drawing 03031-1019 and 00375-1130 (When used with a Field Communicator); Non-incendive for Class I, Division 2, Groups A, B, C, and D.
Temperature Code: T4 (Ta = -50 °C to +40 °C), T3 (Ta = -50 °C to +85 °C), Enclosure Type 4x.

Special Conditions for Safe Use:

1.) The Rosemount 3051 transmitter housing contains aluminum and is considered a potential risk of ignition by impact or friction. Care must be taken into account during installation and use to prevent impact and friction.

2.) The Rosemount 3051 transmitter with the transient terminal block (Option code T1) will not pass the 500Vrms dielectric strength test and this must be taken into account during installation.

CSA international

All CSA hazardous location approved transmitters are certified to ANSI/ISA 12.27.01-2003.

E6 Explosion-Proof, Dust Ignition Proof and Class I Division 2
Certificate No.: 1053834
Applicable Standards: CSA Std. C22.2 No. 142 – M1987, CSA Std. C22.2 No. 30 – M1986, CSA Std. C22.2 No. 213 – M1987, ANSI/ISA 12.27.01-2003.
Markings: Explosion-Proof for Class I, Division 1, Groups B, C, and D.
Dust-Ignition-Proof for Class II and Class III, Division 1, Groups E, F, and G.
Suitable for Class I, Division 2 Groups A, B, C, and D. Enclosure type 4X, factory sealed. Single Seal (See Drawing 03031-1053).

I6 Intrinsically Safe
Certificate No.: 1053834
Applicable Standards: CSA Std. C22.2 No. 142 – M1987, CSA Std. C22.2 No. 157 – 92, ANSI/ISA 12.27.01-2003.
Markings: Intrinsically safe for Class I, Division 1, Groups A, B, C, and D when connected in accordance with Rosemount drawings 03031-1024. Temperature Code T3C. Enclosure Type 4X, Single Seal. Single Seal (See Drawing 03031-1053).

European certifications

E8 ATEX Flame-Proof
Certification No.: KEMA 00ATEX2013X
Applicable Standards: EN60079-0: 2009, EN60079-1: 2007, EN60079-26: 2007, IEC 60079-0:2011
Markings: ⟨Ex⟩ II 1/2 G, Ex d IIC T6 (–50 ≤ Ta ≤ 65 °C) Ga/Gb,
Ex d IIC T5 (–50 ≤ Ta ≤ 80 °C) Ga/Gb,
CE 1180

Process Temp	Ambient Temp	Temp Class
-50 to 65	-50 to 65	T6
-50 to 80	-50 to 80	T5

Special Conditions for Safe Use (X):

1.) In case of repair, contact the manufacturer for information on the dimensions of the flameproof joints.

2.) This device contains a thin wall diaphragm. Installation, maintenance and use shall take into account the environmental conditions to which the diaphragm will be subjected. The manufacturer's instructions for installation and maintenance shall be followed in detail to assure safety during its expected lifetime.

3.) The capacitance of the wrap around label to the enclosure, 1.6E-9 F, exceeds the limit in Table 9 of IEC 60079-0. The user shall determine suitability for the specific application.

4.) Wait at least 5 minutes after powering down device before opening covers, when a hazardous atmosphere is present.

I1 ATEX Intrinsic Safety and Dust
Certificate No.: BAS 97ATEX1089X
Applicable Standards: IEC60079-0:2011, EN60079-11: 2012, EN60079-31: 2009,
Markings: ⟨Ex⟩ II 1 GD, Ex ia IIC T4 Ga (–60 ≤ Ta ≤ +70 °C),
Ex ia IIC T5 Ga (–60 ≤ Ta ≤ +40 °C)
Ex ta IIIC T50 °C T_{500} 60°C Da, Ui = 30 V Ii = 200 mA Pi = 0.9 W Ci = 0.012 µF, IP66,
CE 1180

Special Conditions for Safe Use (X):

1.) The apparatus is not capable of withstanding the 500 V insulation test required by EN60079-11. This must be taken into account when installing the apparatus.

2.) The enclosure may be made of aluminum alloy and given a protective polyurethane paint finish; however care should be taken to protect it from impact or abrasion if located in Zone 0.

N1 ATEX Non-incendive/Type n and Dust
Certification No.: BAS 00ATEX3105X
Applicable Standards: IEC60079-0:2011, EN60079-15:2010, EN60079-31:2009
Markings: ⟨Ex⟩II 3 GD, Ex nA IIC Gc T5 (–40 ≤ Ta ≤ 70 °C),
Ex ta IIIC T50 °C T_{500} 60°C Da, IP66
CE 1180

Specific Conditions for Safe Use (X):

1.) The apparatus is not capable of withstanding the 500 V insulation test required by EN60079-15. This must be taken into account when installing the apparatus.

2.) This device contains a thin wall diaphragm. Installation, maintenance, and use shall take into account the environmental conditions to which the diaphragm will be subjected. The manufacturer's instructions for installation and maintenance shall be followed in detail to assure safety during its expected lifetime. In case of repair, contact the manufacturer for more information on the dimensions of the flameproof joints.

Japanese certifications

E4 TIIS Flame-Proof

Certificate	Description
TC15850	3051C/D/1 4–20 mA HART — no meter
TC15851	3051C/D/1 4–20 mA HART — with meter
TC15854	3051T/G/1 4–20 mA HART, SST, Silicon — no meter
TC15855	3051T/G/1 4–20 mA HART, Alloy C-276, Silicon — no meter
TC15856	3051T/G/1 4–20 mA HART, SST, Silicon — with meter
TC15857	3051T/G/1 4–20 mA HART, Alloy C-276, Silicon — with meter

Markings: Ex d IIC T6

I4 TIIS Intrinsic Safety
Certification No.: TC16406
Markings: Ex ia IIC T4

IECEx certifications

E7 IECEx Flame-proof
Certification No.: IECEx KEM 09.0034X
Applicable Standards: IEC60079-0:2011, IEC60079-1:2007-04, IEC60079-26:2006,
Markings: Ex d IIC T5...T6 Ga/Gb, T5 (-50 °C ≤ Ta ≤ 80 °C)/T6 (-50 °C ≤ Ta ≤ 65 °C)

Process Temp	Ambient Temp	Temp Class
-50 to 65	-50 to 65	T6
-50 to 80	-50 to 80	T5

Conditions of Certification (X):

1.) This device contains a thin wall diaphragm. Installation, maintenance, and use shall take into account the environmental conditions to which the diaphragm will be subjected. The manufacturer's instructions for installation and maintenance shall be followed in detail to assure safety during its expected lifetime.

2.) For information on the dimensions of the flameproof joints the manufacturer shall be contacted.

3.) The capacitance of the wrap around label to the enclosure, 1.6E-9 F, exceeds the limit in Table 9 of IEC 60079-0. The user shall determine suitability for the specific application.

4.) Wait at least 5 minutes after powering down device before opening covers, when a hazardous atmosphere is present.

I7 IECEx Intrinsic Safety
Certification No.: IECEx BAS 09.0076X
Applicable Standards: IEC60079-0:2011, IEC 60079-11:2006
Markings: Ex ia IIC T5 Ga (-60°C ≤ Ta ≤ 40°C), Ex ia IIC T4 Ga (-60°C ≤ Ta ≤ 70°C)
Ui = 30V, Ii = 200mA, Pi = 0.9W, Ci = 0.012 μF, Li = 0

Conditions of Certification (X):

1.) If the apparatus is fitted with an optional 90V transient suppressor, it is not capable of withstanding the 500V insulation test required by IEC 60079-11. This must be taken into account when installing the apparatus.

2.) The enclosure may be made of aluminum alloy and given a protective polyurethane paint finish; however, care should be taken to protect it from impact or abrasion if located in Zone 0.

N7 IECEx Type 'n'
Certification No.: IECEx BAS 09.0077X
Applicable Standards: IEC60079-0:2011, IEC60079-15:2010
Markings: Ex nA IIC T5 Gc (-40 ≤ Ta ≤ 70 °C)

Conditions of Certification (X):

The apparatus is not capable of withstanding the 500V insulation test required by IEC 60079-15. This must be taken into account when installing the apparatus.

Inmetro certifications

E2 Flameproof
Certificate No: CEPEL 97.0073X (Mfg USA and Singapore)
Certificate No: CEPEL 07.1383X (Mfg Brazil)
Applicable Standards: IEC60079-0:2008, IEC60079-1:2009, IEC60079-26:2008, IEC60529:2009
Markings: Ex d IIC T6 Ga/Gb (-50°C ≤ T_a ≤ +65°C)
Ex d IIC T5 Ga/Gb (-50°C ≤ T_a ≤ +80°C)
IP66W

I2 Intrinsic Safety
Certificate No.: CEPEL 97.0072X (Mfg USA and Singapore)
Certificate No.: CEPEL 07.1412X (Mfg Brazil)
Applicable Standards: IEC60079-0:2008, IEC60079-11:2009, IEC60079-26:2008, IEC60529:2009
Markings: Ex ia IIC Ga T5 (-20°C ≤ T_a ≤ +40°C)
Ex ia IIC Ga T4 (-20°C ≤ T_a ≤ +70°C)
IP66W, Ui=30V, Ii= 200mA, Pi=0.9W, Ci =0.012uF, Li=Desprezivel

Specific Conditions for Safe Use (X):

See Certificate.

China certifications

E3 Flameproof and Dust
NEPSI Certificate No.: GYJ091065X
Applicable Standards: GB3836.1-2000, GB3836.4-2000,GB4208-1993, GB12476-2000
Markings: Ex d II C T5/T6, -50°~+80°C (T5), -50°~+65°C (T6), DIP A21 TA T90°C, IP66

Specific Conditions for Safe Use (X):

The symbol "X" placed after the certificate number indicates special condition for safe use, that is the transmitter contains a thin wall diaphragm. Installation, maintenance, and use shall not only take into account the environmental condition, but also follow the manufacturer's instructions.

2.1 The relation between ambient temperature range and temperature class is as follows:

T_a	Temperature class
-50 °C to 80 °C	T5
-50 °C to 65 °C	T6

When used in combustible dust environment, the maximum ambient temperature is 80 °C.

2.2 The earth connection facility in the enclosure should be connected reliably.

2.3 Cable entry certified by notified body with type of protection Ex d II C in accordance with GB3836.1-2000 and GB3836.2-2000, should be applied when installing in hazardous location. When used in combustible dust environment, cable entry in accordance with IP66 or higher level should be applied.

2.4 Obey the warning "Keep tight when the circuit is alive."

2.5 End users are not permitted to change any component's insides.

2.6 When installing, using, and maintaining the transmitter, observe the following standards
GB3836.13-1997 "Electrical apparatus for explosive gas atmospheres Part 13: Repair and overhaul for apparatus used in explosive gas atmospheres"
GB3836.15-2000 "Electrical apparatus for explosive gas atmospheres Part 15: Electrical installations in hazardous area (other than mines)"
GB3836.16-2006 "Electrical apparatus for explosive gas atmospheres Part 16: Inspection and maintenance of electrical installation (other than mines)"
GB50257-1996 "Code for construction and acceptance of electric device for explosion atmospheres and fire hazard electrical equipment installation engineering"
GB12476.2-2006 "Electrical apparatus for use in the presence of combustible dust Part 1-2: Electrical apparatus protected by enclosures and surface temperature limitation-Selection, installation and maintenance"
GB15577-2007 "Safety regulations for dust explosion prevention and protection"

I3 Intrinsic Safety and Dust
NEPSI Certificate No: GYJ091066X
Applicable Standards: GB3836.1-2000, GB3836.2-2000,GB4208-1993, GB12476-2000
Markings: Ex ia II C T4/T5, -60°~+40°C (T5), -60°~+70°C (T4), DIP A21 TA T80°C

Specific Conditions for Safe Use (X):

1. The relation between ambient temperature range and temperature class is as following:

T_a	Temperature Class
-60 °C +40 °C	T5
-60 °C +70 °C	T4

When used in combustible dust environment, the maximum ambient temperature is -20 °C+40 °C.

2. The earth connection facility in the enclosure should be connected reliably.

3. The maximum internal parameters of the transmitter are as following:
U_i = 30 V, I_i=200 mA, P_i=0.9 W, L_i=0 mH, C_i=0.012 μ F

4. End users is not permitted to change any components insides.

5. When installing, using, and maintaining transmitter, observe following standards:
GB3836.1 1997 “Electrical apparatus for explosive gas atmospheres Part 13: Repair and overhaul for apparatus used in explosive gas atmospheres”
GB3836.15-2000 “Electrical apparatus for explosive gas atmospheres Part 15: Electrical installations in hazardous area (other than mines)”
GB3836.16-2006 “Electrical appartus for explosive gas atmospheres Part 16: Inspection and maintenance of electrical installation (other than mines)”
GB50257-1996 “Code for construction and acceptance of electric device for explosion atmospheres and fire hazard eletrical equipment installation engineering”
GB12476.2-2006 “"Electrical apparatus for use in the presence of combustible dust Part 1-2: Electrical apparatus protected by enclosures and surface temperature limitation-Selection, installation and maintenance"
GB15577-2007 “Safety regulations for dust explosion prevention and protection”

U_i = 30 V
I_i = 200 mA
P_i = 1 W
C_i = 0.012 μF
L_i = 0

N3 China Type n - Non-Sparking
NEPSI Certificate No.: GYJ101111X
Applicable Standards: GB3836.1-2000, GB3836.8-2003
Markings: Ex nA nL IIC T5 (-40 °C < TA < 70 °C)

Specific Conditions for Safe Use (X):

1. Symbol "X" is used to denote specific conditions of use: The apparatus is not capable of withstanding the 500 V test to earth for one minute. This must be taken into consideration during installation.

2. The ambient temperature range is: -40 °C $\leq T_a \leq$ +70 °C

3. Maximum input voltage: 42.4 V.

4. Cable glands, conduit or blanking plugs, certified by NEPSI with Ex e or Ex n protection type and IP66 degree of protection provided by enclosure, should be used on external connections and redundant cable entries.

5. Maintenance should be done in non-hazardous location.

6. End users are not permitted to change any components insides, but to settle the problem in conjunction with manufacturer to avoid damage to the product.

7. When installing, using, and maintaining transmitter, observe following standards:
GB3836.1 1997 “Electrical apparatus for explosive gas atmospheres Part 13: Repair and overhaul for apparatus used in explosive gas atmospheres”
GB3836.15-2000 “Electrical apparatus for explosive gas atmospheres Part 15: Electrical installations in hazardous area (other than mines)”
GB3836.16-2006 “Electrical appartus for explosive gas atmospheres Part 16: Inspection and maintenance of electrical installation (other than mines)”
GB50257-1996 “Code for construction and acceptance of electric device for explosion atmospheres and fire hazard eletrical equipment installation engineering”

Combinations of certifications

Stainless steel certification tag is provided when optional approval is specified. Once a device labeled with multiple approval types is installed, it should not be reinstalled using any other approval types. Permanently mark the approval label to distinguish it from unused approval types.

K1 – E1, N1

K5 – E5, I5

K6 – E5, I5, E6, I6, E1, I1

K7 – E7, I7, N7

K8 – E8, I1

KA – E1, I1, N1, E6, I6

KB – E5, I5, E1, I1

KC – E5, I5, E1, I1

KD – E5, I5, E6, I6, I1

B.6 Approval drawings

B.6.1 Factory mutual 03031-1019

CONFIDENTIAL AND PROPRIETARY INFORMATION IS CONTAINED HEREIN AND MUST BE HANDLED ACCORDINGLY	REVISIONS				
	REV	DESCRIPTION	CHG. NO.	APP'D	DATE
	AE	ADD 3051G	RTC1019922	J.G.	7/11/05
	AF	ADD FISCO DETAILS	RTC1021913	N.J.H.	7/9/06
	AG	ADD FISCO ENTITY PARAMETERS TO SHT 12	RTC1022876	N.J.H.	10/27/06

ENTITY APPROVALS FOR

3051C	3001C
3051L	3001CL
3051P	3001CH
3051H	3001S
3051CA	3001SL
3051T	3001SH
3051G	

OUTPUT CODE A (4-20 mA HART) I.S. SEE SHEETS 2-5
OUTPUT CODE M (LOW POWER) I.S. SEE SHEETS 6-7
OUTPUT CODE F/W (FIELDBUS) I.S. SEE SHEETS 8-12
ALL OUTPUT CODES NONINCENDIVE SEE SHEET 13

THE ROSEMOUNT TRANSMITTERS LISTED ABOVE ARE F.M. APPROVED AS INTRINSICALLY SAFE WHEN USED IN CIRCUIT WITH F.M. APPROVED BARRIERS WHICH MEET THE ENTITY PARAMETERS LISTED IN THE CLASS I, II, AND III, DIVISION 1 GROUPS INDICATED, TEMP CODE T4. ADDITIONALLY, THE ROSEMOUNT 751 FIELD SIGNAL INDICATOR IS F.M. APPROVED AS INTRINSICALLY SAFE WHEN CONNECTED IN CIRCUIT WITH ROSEMOUNT TRANSMITTERS (FROM ABOVE) AND F.M. APPROVED BARRIERS WHICH MEET THE ENTITY PARAMETERS LISTED FOR CLASS I, II, AND III, DIVISION 1, GROUPS INDICATED, TEMP CODE T4.

TO ASSURE AN INTRINSICALLY SAFE SYSTEM, THE TRANSMITTER AND BARRIER MUST BE WIRED IN ACCORDANCE WITH THE BARRIER MANUFACTURER'S FIELD WIRING INSTRUCTIONS AND THE APPLICABLE CIRCUIT DIAGRAM.

CAD MAINTAINED (MicroStation)

UNLESS OTHERWISE SPECIFIED DIMENSIONS IN INCHES [mm]. REMOVE ALL BURRS AND SHARP EDGES. MACHINE SURFACE FINISH 125 -TOLERANCE- .X ± .1 [2,5] .XX ± .02 [0,5] .XXX ± .010 [0,25] FRACTIONS ± 1/32 ANGLES ± 2° DO NOT SCALE PRINT	CONTRACT NO. DR. MIKE DOBE 03/21/89 CHK'D APP'D. KELLY ORTH 03/22/89 APP'D. GOVT.	EMERSON. Process Management ROSEMOUNT® 8200 Market Boulevard • Chanhassen, MN 55317 USA TITLE: INDEX OF I.S. & NONINCENDIVE F.M. FOR 3051C/L/P/H/T AND 3001C/S SIZE A | FSCM NO | DWG NO. 03031-1019 SCALE N/A | WT. | SHEET 1 OF 13	

REVISIONS				
REV	DESCRIPTION	CHG. NO.	APP'D	DATE
AG				

BARRIER PARAMETERS (APPLICABLE TO OUTPUT CODES A & M)

Pmax = 1WATT

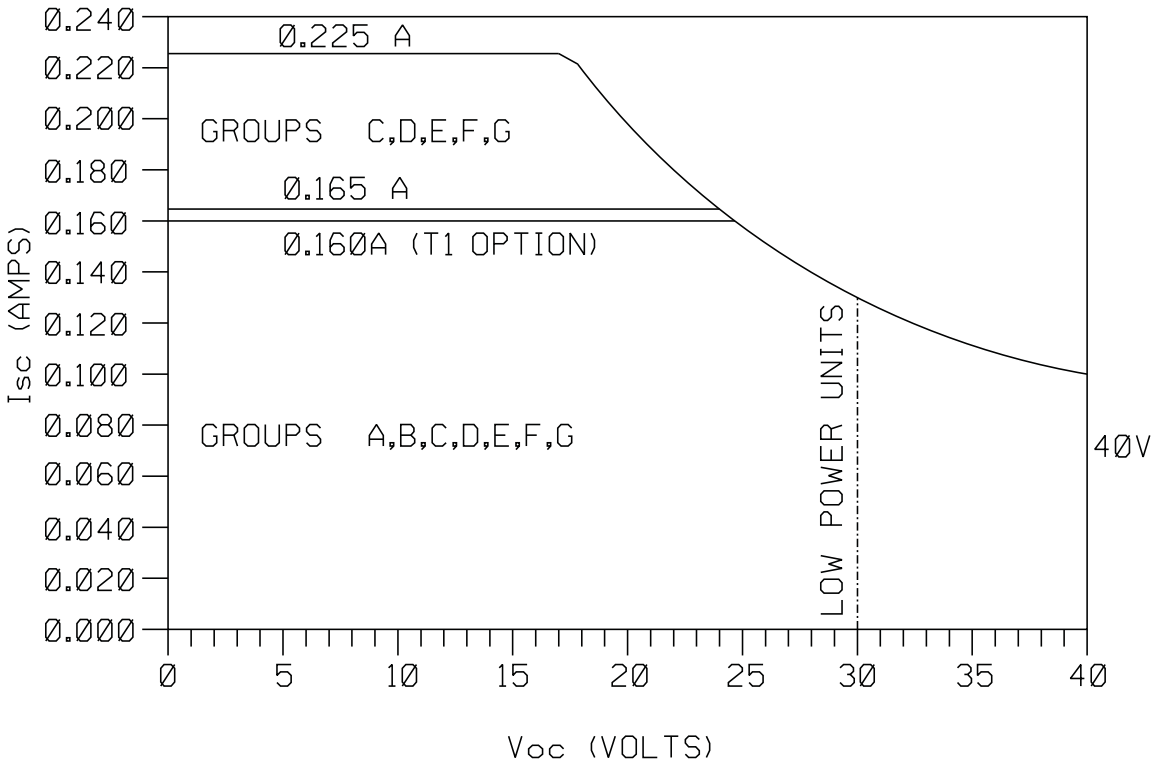

Rosemount Inc. 8200 Market Boulevard Chanhassen, MN 55317 USA			CAD MAINTAINED (MicroStation)
DR. MIKE DOBE	SIZE A	FSCM NO	DWG NO. 03031-1019
ISSUED	SCALE N/A	WT. ———	SHEET 2 OF 13

Form Rev AC

REVISIONS				
REV	DESCRIPTION	CHG. NO.	APP'D	DATE
AG				

CIRCUIT DIAGRAM 1
ONE BARRIER OR CONVERTER:
SINGLE OR DUAL CHANNEL

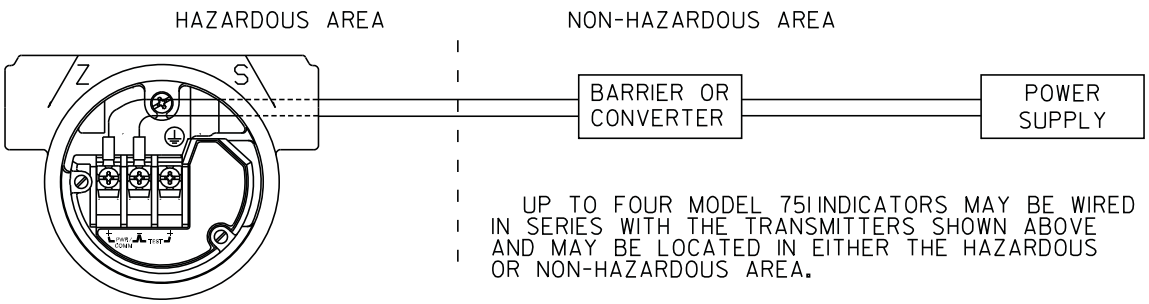

OUTPUT CODE A
MODELS INCLUDED
3051C, L, P, H, T, CA, G
3001C, CL, CH, S, SL, SH

CIRCUIT DIAGRAM 2
SUPPLY AND RETURN BARRIERS
(ONLY FOR USE WITH BARRIERS APPROVED IN THIS CONFIGURATION)

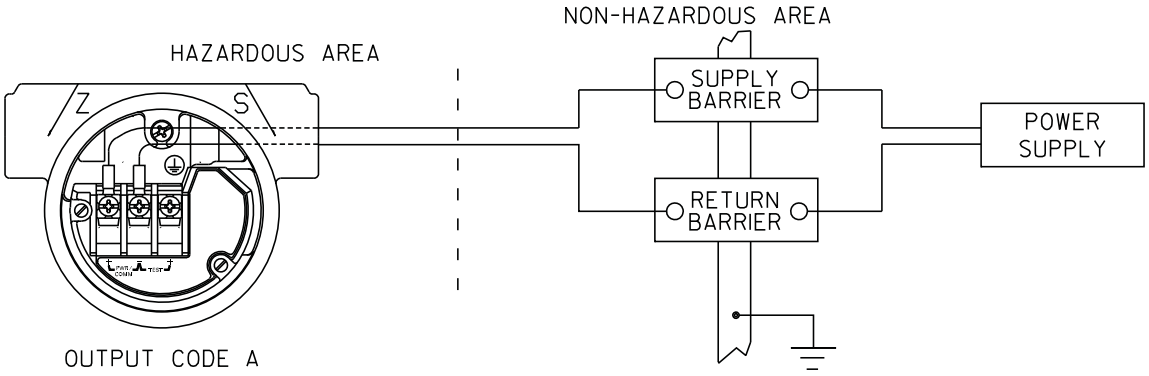

OUTPUT CODE A
MODELS INCLUDED
3051C, L, P, H, T, CA, G
3001C, CL, CH, S, SL, SH

Rosemount Inc.
8200 Market Boulevard
Chanhassen, MN 55317 USA

DR. MIKE DOBE
ISSUED

CAD MAINTAINED (MicroStation)

SIZE	FSCM NO	DWG NO.	
A		03031-1019	
SCALE N/A	WT. ———	SHEET 3 OF 13	

Form Rev AC

REVISIONS				
REV	DESCRIPTION	CHG. NO.	APP'D	DATE
AG				

ENTITY CONCEPT APPROVALS

THE ENTITY CONCEPT ALLOWS INTERCONNECTION OF INTRINSICALLY SAFE APPARATUS TO ASSOCIATED APPARATUS NOT SPECIFICALLY EXAMINED IN COMBINATION AS A SYSTEM. THE APPROVED VALUES OF MAX. OPEN CIRCUIT VOLTAGE (Voc OR Vt) AND MAX. SHORT CIRCUIT CURRENT (Isc OR It) AND MAX.POWER (Voc X Isc/4) OR (Vt X It/4), FOR THE ASSOCIATED APPARATUS MUST BE LESS THAN OR EQUAL TO THE MAXIMUM SAFE INPUT VOLTAGE (Vmax), MAXIMUM SAFE INPUT CURRENT (Imax), AND MAXIMUM SAFE INPUT POWER (Pmax) OF THE INTRINSICALLY SAFE APPARATUS. IN ADDITION, THE APPROVED MAX. ALLOWABLE CONNECTED CAPACITANCE (Ca) OF THE ASSOCIATED APPARATUS MUST BE GREATER THAN THE SUM OF THE INTERCONNECTING CABLE CAPACITANCE AND THE UNPROTECTED INTERNAL CAPACITANCE (C_i) OF THE INTRINSICALLY SAFE APPARATUS, AND THE APPROVED MAX. ALLOWABLE CONNECTED INDUCTANCE (La) OF THE ASSOCIATED APPARATUS MUST BE GREATER THAN THE SUM OF THE INTERCONNECTING CABLE INDUCTANCE AND THE UNPROTECTED INTERNAL INDUCTANCE (L_i) OF THE INTRINSICALLY SAFE APPARATUS.

FOR OUTPUT CODE A

NOTE: ENTITY PARAMETERS LISTED APPLY ONLY TO ASSOCIATED APPARATUS WITH LINEAR OUTPUT.

CLASS I, DIV. 1, GROUPS A AND B

V_{MAX} = 40V	V_T OR V_{OC} IS LESS THAN OR EQUAL TO 40V
I_{MAX} = 165mA	I_T OR I_{SC} IS LESS THAN OR EQUAL TO 165mA
P_{MAX} = 1 WATT	$(\frac{V_T \times I_T}{4})$ OR $(\frac{V_{OC} \times I_{SC}}{4})$ IS LESS THAN OR EQUAL TO 1 WATT
C_I = .01μf	C_A IS GREATER THAN .01μf
L_I =10μH	L_A IS GREATER THAN 10μH

✳ FOR T1 OPTION:

Imax = 160mA	I_T OR I_{SC} IS LESS THAN OR EQUAL TO 160mA
L_I =1.05mH	L_A IS GREATER THAN 1.05mH

CLASS I, DIV. 1, GROUPS C AND D

V_{MAX} = 40V	V_T OR V_{OC} IS LESS THAN OR EQUAL TO 40V
I_{MAX} = 225mA	I_T OR I_{SC} IS LESS THAN OR EQUAL TO 225mA
P_{MAX} = 1 WATT	$(\frac{V_T \times I_T}{4})$ OR $(\frac{V_{OC} \times I_{SC}}{4})$ IS LESS THAN OR EQUAL TO 1 WATT
C_I = .01μf	C_A IS GREATER THAN .01μf
L_I =10μH	L_A IS GREATER THAN 10μH

✳ FOR T1 OPTION:

L_I =1.05mH	L_A IS GREATER THAN 1.05mH

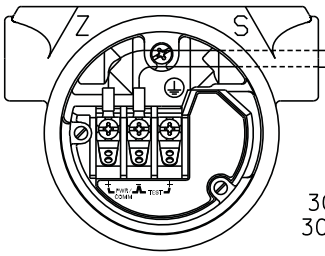

HAZARDOUS AREA | NON-HAZARDOUS AREA

ASSOCIATED APPARATUS

(SEE SHEET 3)

OUTPUT CODE A
MODELS INCLUDED
305IC, L, P, H, T, CA, G
300IC, CL, CH, S, SL, SH

Rosemount Inc.
8200 Market Boulevard
Chanhassen, MN 55317 USA

DR. MIKE DOBE

ISSUED

CAD MAINTAINED (MicroStation)

SIZE	FSCM NO	DWG NO.	
A		03031-1019	
SCALE N/A	WT. ———	SHEET 4 OF 13	

Form Rev AC

REVISIONS				
REV	DESCRIPTION	CHG. NO.	APP'D	DATE
AG				

MODEL 3051G

FOR OUTPUT CODE A

CLASS I, DIV. 1, GROUPS A AND B

V_{MAX} = 30V	Vt or Voc IS LESS THAN OR EQUAL TO 30V
I_{MAX} = 165mA	It or Isc IS LESS THAN OR EQUAL TO 165mA
P_{MAX} = 1 WATT	(Voc X Isc/4) or (Vt X It/4) IS LESS THAN OR EQUAL TO 1 WATT
C_I = 0.01 µF	C_A IS GREATER THAN 0.01 µF + C_{CABLE}
L_I = 10 µH	L_A IS GREATER THAN 10 µH + L_{CABLE}

FOR T1 OPTION:

I_{MAX} = 160mA	It or Isc IS LESS THAN OR EQUAL TO 145mA
L_I = 1.06 mH	L_A IS GREATER THAN 1.06 mH + L_{CABLE}

CLASS I, DIV. 1, GROUPS C AND D

V_{MAX} = 30V	Vt or Voc IS LESS THAN OR EQUAL TO 30V
I_{MAX} = 225mA	It or Isc IS LESS THAN OR EQUAL TO 225mA
P_{MAX} = 1 WATT	(Voc X Isc/4) or (Vt X It/4) IS LESS THAN OR EQUAL TO 1 WATT
C_I = 0.01 µF	C_A IS GREATER THAN 0.01 µF + C_{CABLE}
L_I = 10 µH	L_A IS GREATER THAN 10 µH + L_{CABLE}

FOR T1 OPTION:

L_I = 1.06 mH	L_A IS GREATER THAN 1.06 mH + L_{CABLE}

Rosemount Inc.
8200 Market Boulevard
Chanhassen, MN 55317 USA

DR. Myles Lee Miller
ISSUED

CAD MAINTAINED (MicroStation)

SIZE	FSCM NO	DWG NO.	
A		03031-1019	

SCALE N/A WT. ——— SHEET 5 OF 13

Form, Rev AC

REVISIONS				
REV	DESCRIPTION	CHG. NO.	APP'D	DATE
AG				

FOR OUTPUT CODE M

CLASS I, DIV. 1, GROUPS A AND B

V_{MAX} = 30V	V_T OR V_{OC} IS LESS THAN OR EQUAL TO 30V
I_{MAX} = 165mA	I_T OR I_{SC} IS LESS THAN OR EQUAL TO 165mA
P_{MAX} = 1 WATT	$(\frac{V_T \times I_T}{4})$ OR $(\frac{V_{OC} \times I_{SC}}{4})$ IS LESS THAN OR EQUAL TO 1 WATT
C_I = .042µf	C_A IS GREATER THAN .042µf
L_I =10µH	L_A IS GREATER THAN 10µH

* FOR T1 OPTION:

L_I =0.75mH	L_A IS GREATER THAN 0.75mH

CLASS I, DIV. 1, GROUPS C AND D

V_{MAX} = 30V	V_T OR V_{OC} IS LESS THAN OR EQUAL TO 30V
I_{MAX} = 225mA	I_T OR I_{SC} IS LESS THAN OR EQUAL TO 225mA
P_{MAX} = 1 WATT	$(\frac{V_T \times I_T}{4})$ OR $(\frac{V_{OC} \times I_{SC}}{4})$ IS LESS THAN OR EQUAL TO 1 WATT
C_I = .042µf	C_A IS GREATER THAN .042µf
L_I =10µH	L_A IS GREATER THAN 10µH

* FOR T1 OPTION:

L_I =0.75mH	L_A IS GREATER THAN 0.75mH

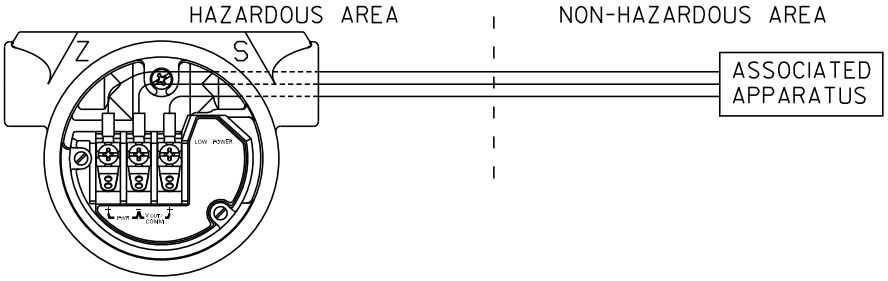

OUTPUT CODE M
AVAILABLE FOR THE MODELS LISTED

3051C	3051H
3051L	3051CA
3051P	3051T

Rosemount Inc.
8200 Market Boulevard
Chanhassen, MN 55317 USA

CAD MAINTAINED (MicroStation)

DR. MIKE DOBE	SIZE A	FSCM NO	DWG NO. 03031-1019
ISSUED	SCALE N/A	WT. ———	SHEET 6 OF 13

Form Rev AC

REVISIONS				
REV	DESCRIPTION	CHG. NO.	APP'D	DATE
AG				

CIRCUIT DIAGRAM 3
ONE DUAL CHANNEL BARRIER

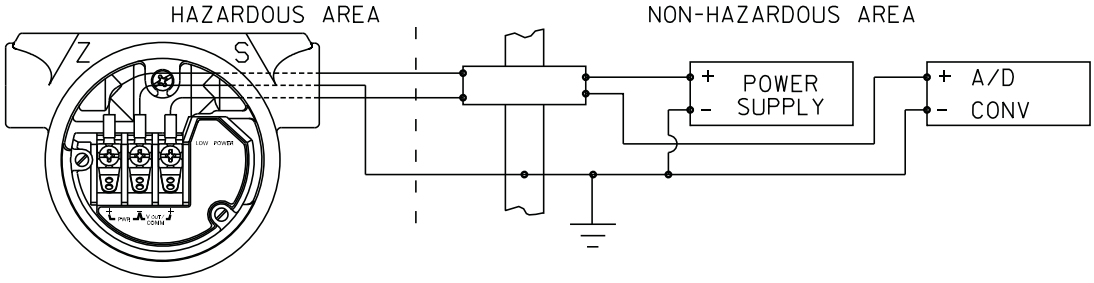

OUTPUT CODE M
AVAILABLE FOR THE MODELS LISTED

305IC	305IH
305IL	305ICA
305IP	305IT

CIRCUIT DIAGRAM 4
TWO SINGLE CHANNEL BARRIERS
(ONLY FOR USE WITH BARRIERS APPROVED
IN THIS CONFIGURATION)

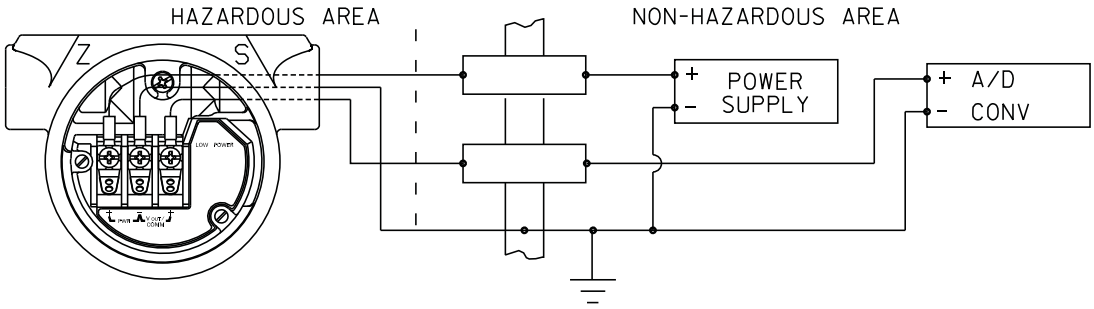

OUTPUT CODE M
AVAILABLE FOR THE MODELS LISTED

305IC	305IH
305IL	305ICA
305IP	305IT

Rosemount Inc. 8200 Market Boulevard Chanhassen, MN 55317 USA			CAD MAINTAINED (MicroStation)
DR. SANDI MANSON	SIZE A	FSCM NO	DWG NO. 03031-1019
ISSUED	SCALE N/A	WT. ———	SHEET 7 OF 13

Form Rev AC

REVISIONS				
REV	DESCRIPTION	CHG. NO.	APP'D	DATE
AG				

3051 WITH FOUNDATION FIELDBUS OR PROFIBUS. (OUTPUT CODE F OR W)

BARRIER PARAMETERS (APPLICABLE TO OUTPUT CODE F OR W)

Pmax = 1.3 WATT

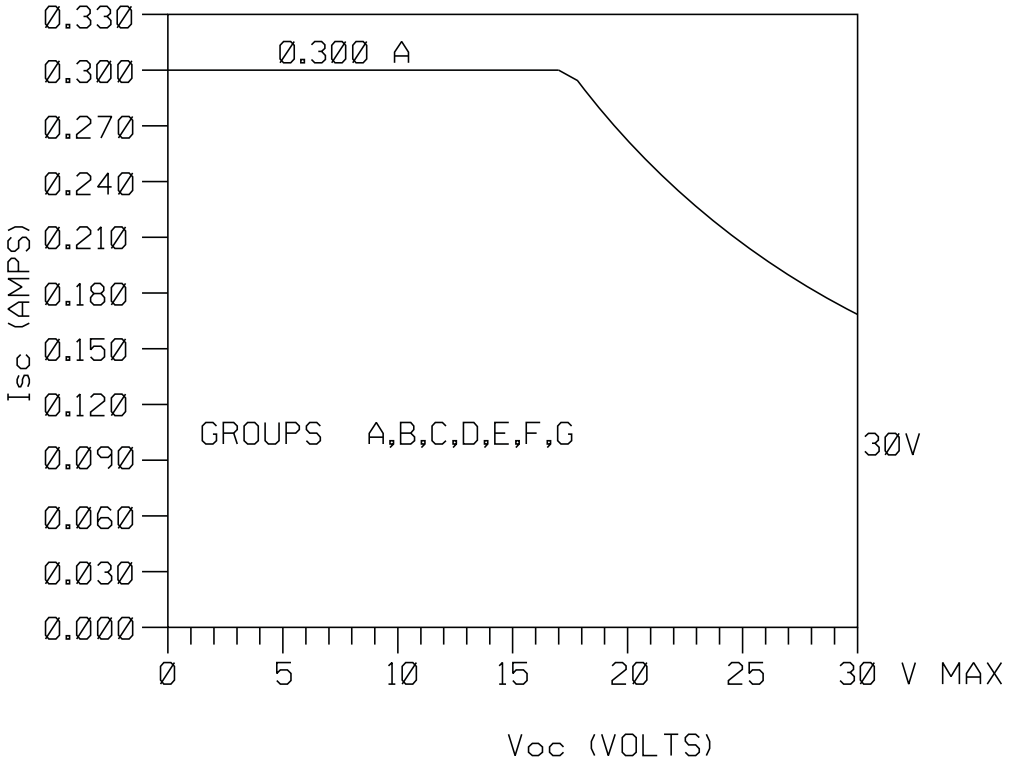

Rosemount Inc.
8200 Market Boulevard
Chanhassen, MN 55317 USA

CAD MAINTAINED (MicroStation)

DR. Myles Lee Miller	SIZE A	FSCM NO	DWG NO. 03031-1019
ISSUED	SCALE N/A	WT. ———	SHEET 8 OF 13

Form Rev. AC

REVISIONS				
REV	DESCRIPTION	CHG. NO.	APP'D	DATE
AG				

CIRCUIT DIAGRAM 1
ONE BARRIER OR CONVERTER:
SINGLE OR DUAL CHANNEL

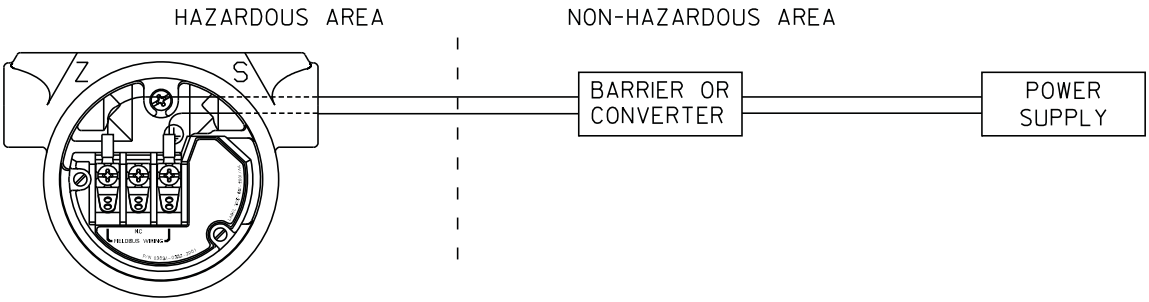

OUTPUT CODE F or W
MODELS INCLUDED
305IC, L, P, H, T, CA
300IC, CL, CH

CIRCUIT DIAGRAM 2
SUPPLY AND RETURN BARRIERS
(ONLY FOR USE WITH BARRIERS APPROVED IN THIS CONFIGURATION)

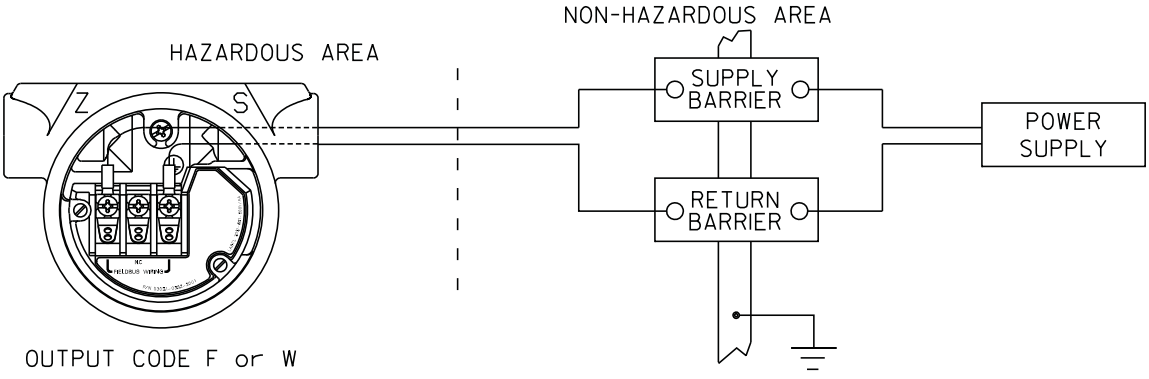

OUTPUT CODE F or W
MODELS INCLUDED
305IC, L, P, H, T, CA
300IC, CL, CH

Rosemount Inc.
8200 Market Boulevard
Chanhassen, MN 55317 USA

DR. Myles Lee Miller
ISSUED

CAD MAINTAINED (MicroStation)

SIZE	FSCM NO	DWG NO.	
A		03031-1019	

SCALE N/A WT. ——— SHEET 9 OF 13

Form Rev AC

REVISIONS				
REV	DESCRIPTION	CHG. NO.	APP'D	DATE
AG				

ENTITY CONCEPT APPROVALS

THE ENTITY CONCEPT ALLOWS INTERCONNECTION OF INTRINSICALLY SAFE APPARATUS TO ASSOCIATED APPARATUS NOT SPECIFICALLY EXAMINED IN COMBINATION AS A SYSTEM. THE APPROVED VALUES OF MAX. OPEN CIRCUIT VOLTAGE (Voc OR Vt) AND MAX. SHORT CIRCUIT CURRENT (Isc OR It) AND MAX. POWER (Voc X Isc/4) OR (Vt X It/4), FOR THE ASSOCIATED APPARATUS MUST BE LESS THAN OR EQUAL TO THE MAXIMUM SAFE INPUT VOLTAGE (Vmax), MAXIMUM SAFE INPUT CURRENT (Imax), AND MAXIMUM SAFE INPUT POWER (Pmax) OF THE INTRINSICALLY SAFE APPARATUS. IN ADDITION, THE APPROVED MAX. ALLOWABLE CONNECTED CAPACITANCE (C_a) OF THE ASSOCIATED APPARATUS MUST BE GREATER THAN THE SUM OF THE INTERCONNECTING CABLE CAPACITANCE AND THE UNPROTECTED INTERNAL CAPACITANCE (C_i) OF THE INTRINSICALLY SAFE APPARATUS, AND THE APPROVED MAX. ALLOWABLE CONNECTED INDUCTANCE (L_a) OF THE ASSOCIATED APPARATUS MUST BE GREATER THAN THE SUM OF THE INTERCONNECTING CABLE INDUCTANCE AND THE UNPROTECTED INTERNAL INDUCTANCE (L_i) OF THE INTRINSICALLY SAFE APPARATUS.

NOTE: ENTITY PARAMETERS LISTED APPLY ONLY TO ASSOCIATED APPARATUS WITH LINEAR OUTPUT.

FOR OUTPUT CODE F or W

CLASS I, DIV. 1, GROUPS A, B, C AND D

V_{MAX} = 30V	V_T OR V_{OC} IS LESS THAN OR EQUAL TO 30V
I_{MAX} = 300mA	I_T OR I_{SC} IS LESS THAN OR EQUAL TO 300mA
P_{MAX} = 1.3 WATT	$(\frac{V_T \times I_T}{4})$ OR $(\frac{V_{OC} \times I_{SC}}{4})$ IS LESS THAN OR EQUAL TO 1.3 WATT
C_I = 0μf	C_A IS GREATER THAN 0μf
L_I = 0μH	L_A IS GREATER THAN 0μH

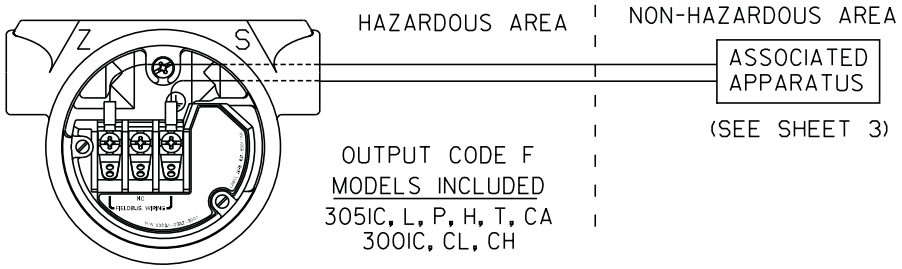

Rosemount Inc. 8200 Market Boulevard Chanhassen, MN 55317 USA			CAD MAINTAINED (MicroStation)
DR. Myles Lee Miller	SIZE A	FSCM NO	DWG NO. 03031-1019
ISSUED	SCALE N/A	WT. ———	SHEET 10 OF 13

Form Rev AC

REVISIONS				
REV	DESCRIPTION	CHG. NO.	APP'D	DATE
AG				

FISCO CONCEPT APPROVALS

THE FISCO CONCEPT ALLOWS INTERCONNECTION OF INTRINSICALY SAFE APPARATUS TO ASSOCIATED APPARATUS NOT SPECIALLY EXAMINED IN SUCH COMBINATION. FOR THIS INTERCONNECTION TO BE VALID THE VOLTAGE (U_i or Vmax), THE CURRENT (I_i or Imax), AND THE POWER (P_i or Pma) THAT INTRINSICALLY SAVE APPARATUS CAN RECEIVE AND REMAIN INTRINSICALY SAFE, INCLUDING FAULTS, MUST BE EQUAL OR GREATER THAN THE VOLTAGE (Uo, Voc, or Vt), THE CURRENT (Io, Isc, or It), AND THE POWER (Po or Pmax) LEVELS WHICH CAN BE DELIVERED BY THE ASSOCIATED APPARATUS, CONSIDERING FAULTS AND APPLICABLE FACTORS. ALSO, THE MAXIMUM UNPROTECTED CAPACITANCE (C_i) AND THE INDUCTANCE (L_i) OF EACH APPARATUS (BESIDES THE TERMINATION) CONNECTED TO THE FIELDBUS MUST BE LESS THAN OR EQUAL TO 5nF AND 10μH RESPECTVELY.
ONLY ONE ACTIVE DEVICE IN EACH SECTION (USUALLY THE ASSOCIATED APPARATUS) IS ALLOWED TO CONTRIBUTE THE DESIRED ENERGY FOR THE FIELDBUS SYSTEM. THE ASSOCIATED APPARATUS' VOLTAGE Uo (or Voc or Vt) IS LIMITED TO A RANGE OF 14V TO 24 V.D.C. ALL OTHER EQUIPENT COMBINED IN THE BUS CABLE MUST BE PASSIVE (THEY CANNOT PROVIDE ENERGY TO THE SYSTEM, EXCEPT A LEAKAGE CURRENT OF 50 μA FOR EACH CONNECTED DEVICE) SEPARATELY POWERED EQUIPMENT REQUIRES A GALVANIC ISOLATION TO AFFIRM THAT THE INTRINSICALLY SAFE FIELDBUS CIRCUIT WILL REMAIN PASSIVE. THE PARAMETER OF THE CABLE USED TO INTERCONNECT THE DEVICES MUST BE IN THE FOLLOWING RANGE:

LOOP RESISTANCE R':	15...150 OHM/km
INDUCTANCE PER UNIT LENGTH L':	0.4...1mH/KM
CAPACITANCE PER UNLIT LENGTH C':	80...200nF

C' = C' LINE/LINE +0.5C' LINE/SCREEN, IF BOTH LINES ARE FLOATING, OR
C' = C' LINE/LINE +C' LINE/SCREEN, IF THE SCREEN IS CONNECTED TO ONE LINE

TRUNK CABLE LENGTH:	$\leq$ 1000 m
SPUR CABLE LENGTH:	$\leq$ 30 m
SPLICE LENGTH:	$\leq$ 1 m

AN APPROVED INFALLIBLE LINE TERMINATION TO EACH END OF THE TRUNK CABLE, WITH THE FOLLOWING PARAMETERS IS APPROPRIATE:

R = 90...100 OHMS C = 2.2μF

AN ALLOWED TERMINATION MIGHT ALREADY BE LINKED IN THE ASSOCIATED APPARATUS. DUE TO I.S. REASONS, THE NUMBER OF PASSIVE APPARATUS CONNECTED TO THE BUS SEGMENT IS NOT LIMITED. IF THE RULES ABOVE ARE FOLLOWED, UP TO A TOTAL LENGTH OF 1000 m (THE SUMMATION OF TRUNK AND ALL SPUR CABLES), THE INDUCTANCE AND THE CAPACITANCE OF THE CABLE WILL NOT DAMAGE THE INTRINSIC SAFETY OF THE SYSTEM.

NOTES:
INTRINSICALLY SAFE CLASS I, DIV. 1, GROUPS A, B, C, D

1. THE MAXIMUM NON-HAZARDOUS AREA VOLTAGE MUST NOT EXCEED 250 V.
2. CAUTION: ONLY USE SUPPLY WIRES SUITABLE FOR 5°C ABOVE SURROUNDING TEMPERATURE.
3. WARNING: REPLACEMENT OF COMPONENTS MAY DAMAGE INTRINSIC SAFETY.

Rosemount Inc.
8200 Market Boulevard
Chanhassen, MN 55317 USA

CAD MAINTAINED (MicroStation)

DR. Myles Lee Miller	SIZE A	FSCM NO	DWG NO. 03031-1019
ISSUED	SCALE N/A	WT. ———	SHEET 11 OF 13

Form Rev AC

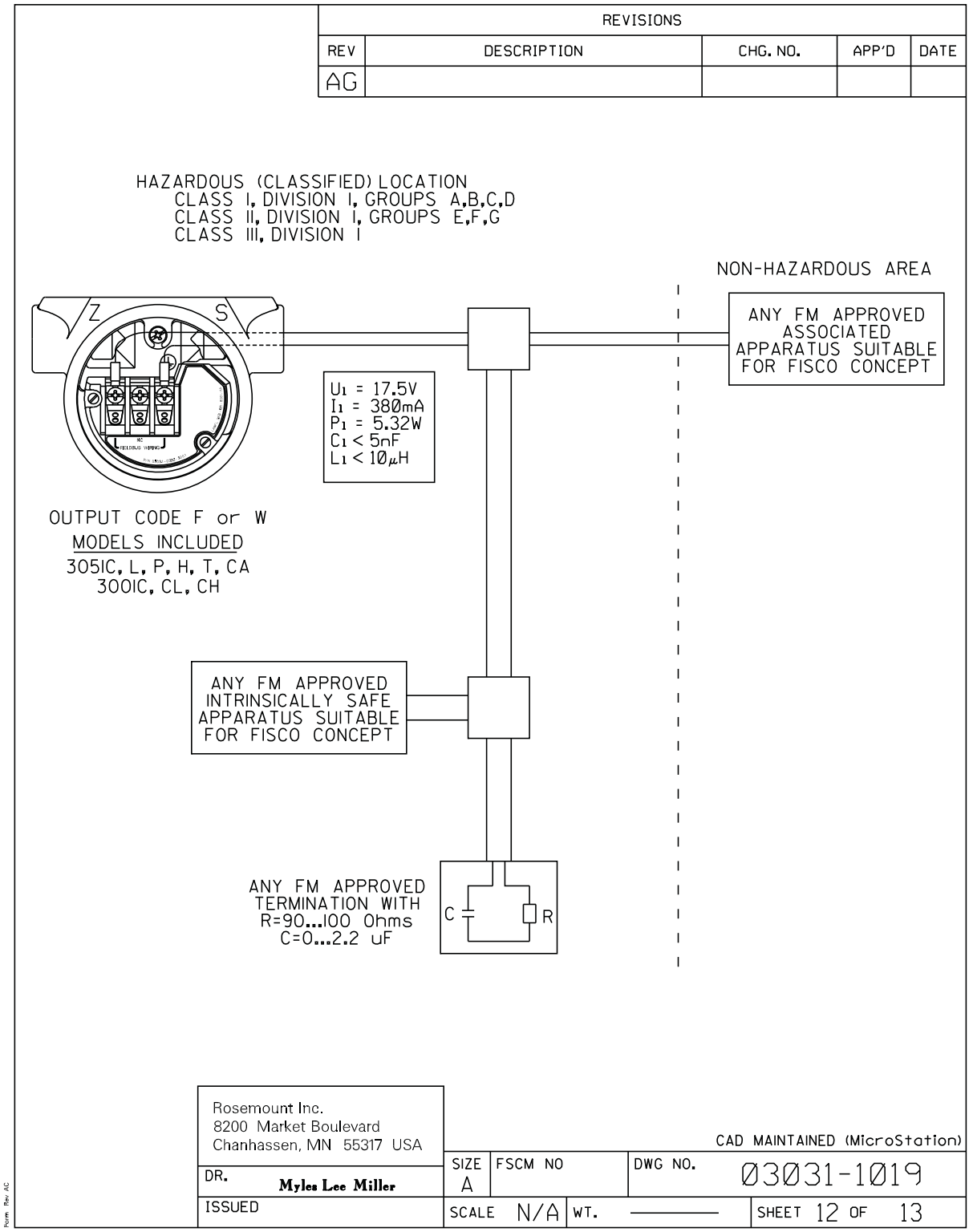
REVISIONS
REV
DESCRIPTION
CHG. NO.
APP'D
DATE
AG
HAZARDOUS (CLASSIFIED) LOCATION
CLASS I, DIVISION I, GROUPS A,B,C,D
CLASS II, DIVISION I, GROUPS E,F,G
CLASS III, DIVISION I
NON-HAZARDOUS AREA
ANY FM APPROVED ASSOCIATED APPARATUS SUITABLE FOR FISCO CONCEPT
U1 = 17.5V
I1 = 380mA
P1 = 5.32W
C1 < 5nF
L1 < 10µH
OUTPUT CODE F or W
MODELS INCLUDED
305IC, L, P, H, T, CA
300IC, CL, CH
ANY FM APPROVED INTRINSICALLY SAFE APPARATUS SUITABLE FOR FISCO CONCEPT
ANY FM APPROVED TERMINATION WITH R=90...100 Ohms C=0...2.2 uF
C
R
Rosemount Inc.
8200 Market Boulevard
Chanhassen, MN 55317 USA
DR.
Myles Lee Miller
ISSUED
CAD MAINTAINED (MicroStation)
SIZE
A
FSCM NO
DWG NO.
03031-1019
SCALE N/A
WT.
SHEET 12 OF 13

REVISIONS				
REV	DESCRIPTION	CHG. NO.	APP'D	DATE
AG				

NONINCENDIVE FIELD CIRCUIT
CLASS I, DIV. 2 LOCATIONS

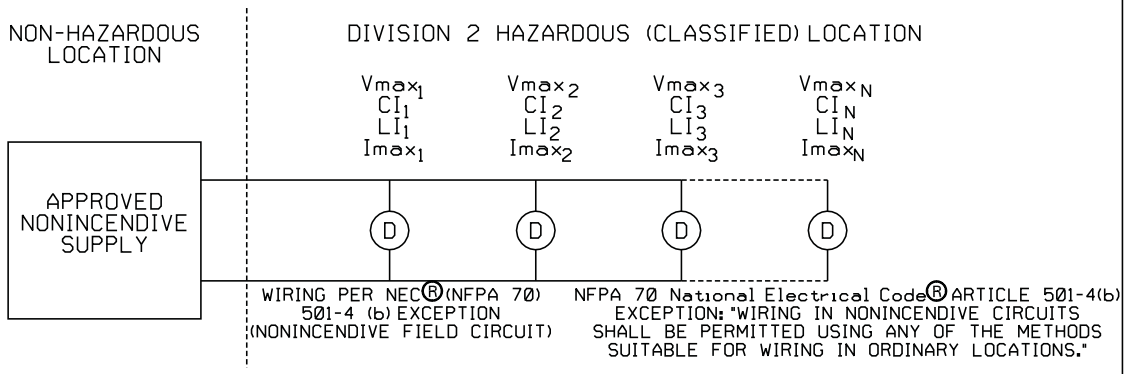

IN NORMAL OPERATION

DEVICES CONTROL THROUGH-CURRENT

PARAMETERS DEVICE

Voc <= Minimum of ($Vmax_1$, $Vmax_2$, ... $Vmax_N$)

$Imax_1$ >= Iq_1 + $Isignal_1$

$Imax_2$ >= Iq_1 + $Isignal_2$

.

.

.

$Imax_N$ >= Iq_N + $Isignal_N$

Ca <= Ci_1 + Ci_2 +... + Ci_N + Ccable

La <= Li_1 + Li_2 +... + Li_N + Lcable

Imax for an individual device = Iq + Isignal

Iq =Quiescent current through device (Maximum quiescent current for the device)

Isignal =Signaling current through device (Protocol may limit signaling to one device at a time)

Operating Imax = Iq_1 + Iq_2 +...+ Iq_N + I_{signal} max

I_{signal} max = Max. of ($Isignal_1$, $Isignal_2$ ..... $Isignal_N$)

ROSEMOUNT 3051/3001

	4-20mA / HART	FIELDBUS (F or W)
Vmax	40v	30v
Maximum normal operating current	22mA	27mA
Ca	.010uF	0uF
La	10uH	0uH

ROSEMOUNT 3051 TRANSMITTERS ARE CURRENT CONTROLLERS ON INDIVIDUAL PARALLEL BRANCHES WITH RESPECT TO THE POWER SUPPLY. IN NONINCENDIVE INSTALLATIONS THE Imax FOR EACH TRANSMITTER IS NOT RELATED TO THE MAXIMUM CURRENT OF THE POWER SUPPLY (Isc) IN THE SAME MANNER AS FOR TRANSMITTER INSTALLED PER I.S. REQUIREMENTS, BECAUSE NONINCENDIVE REQUIREMENTS INCLUDE ONLY NORMAL OPERATING CONDITIONS.

REFERENCE: APPENDIX A7.3 (FM3611)

Rosemount Inc.
8200 Market Boulevard
Chanhassen, MN 55317 USA

CAD MAINTAINED (MicroStation)

DR. Jon Steffens	SIZE A	FSCM NO	DWG NO. 03031-1019	
ISSUED	SCALE N/A	WT. ———	SHEET 13 OF 13	

Form Rev AC

B.6.2 Canadian standards association (CSA) 03031-1024

CONFIDENTIAL AND PROPRIETARY INFORMATION IS CONTAINED HEREIN AND MUST BE HANDLED ACCORDINGLY

REVISIONS

REV	DESCRIPTION	CHG. NO.	APP'D	DATE
AA	ADD FIELDBUS	RTC1004232	M.L.M.	5/28/98
AB	ADD PROFIBUS, ENTITY PARAMETERS	RTC1008326	P.C.S.	2/4/00
AC	REM It, Vt FROM ENTITY PARAMETERS	RTC1009279	W.C.R.	7/11/00
AD	ADD FISCO FIELDBUS	RTC1012624	J.P.W.	4/4/02

APPROVALS FOR

3051C	3001C
3051L	3001CL
3051P	3001CH
3051H	3001S
3051CA	3001SL
3051T	3001SH

OUTPUT CODE A (4-20 mA HART) I.S. SEE SHEETS 2-3
OUTPUT CODE M (LOW POWER) I.S. SEE SHEETS 3-4
OUTPUT CODE F/W (FIELDBUS) I.S. SEE SHEETS 5-7
OUTPUT CODES A,F,W I.S. ENTITY PARAMETERS SHEET 8-9

TO ASSURE AN INTRINSICALLY SAFE SYSTEM, THE TRANSMITTER AND BARRIER MUST BE WIRED IN ACCORDANCE WITH THE BARRIER MANUFACTURER'S FIELD WIRING INSTRUCTIONS AND THE APPLICABLE CIRCUIT DIAGRAM.

WARNING - EXPLOSION HAZARD - SUBSTITUTION OF COMPONENTS MAY IMPAIR SUITABILITY FOR CLASS I, DIVISION 2.

AVERTISSEMENT - RISQUE D'EXPLOSION - LA SUBSTITUTION DE COMPOSANTS PEUT RENDRE CE MATERIEL INACCEPTABLE POUR LES EMPLACEMENTS DE CLASSE I, DIVISION 2.

CAD MAINTAINED (MicroStation)

UNLESS OTHERWISE SPECIFIED DIMENSIONS IN INCHES [mm]. REMOVE ALL BURRS AND SHARP EDGES. MACHINE SURFACE FINISH 125

-TOLERANCE-
.X ± .1 [2,5]
.XX ± .02 [0,5]
.XXX ± .010 [0,25]

FRACTIONS ± 1/32
ANGLES ± 2°

DO NOT SCALE PRINT

CONTRACT NO.

DR. Mike Debe 08/27/90

CHK'D

APP'D. GLEN MONZO 8/31/90

APP'D. GOVT.

EMERSON. Process Management

ROSEMOUNT®
8200 Market Boulevard • Chanhassen, MN 55317 USA

TITLE
INDEX OF I.S. CSA FOR 3051C/L/P/H/T & 3001C/S

SIZE	FSCM NO	DWG NO.
A		03031-1024

SCALE N/A WT. SHEET 1 OF 9

REVISIONS				
REV	DESCRIPTION	CHG. NO.	APP'D	DATE
AD				

CSA INTRINSIC SAFETY APPROVALS

CIRCUIT CONNECTION WITH BARRIER OR CONVERTER

Ex ia

INTRINSICALLY SAFE/SECURITE INTRINSEQUE
4-20 mA, ("A" OUTPUT CODE)

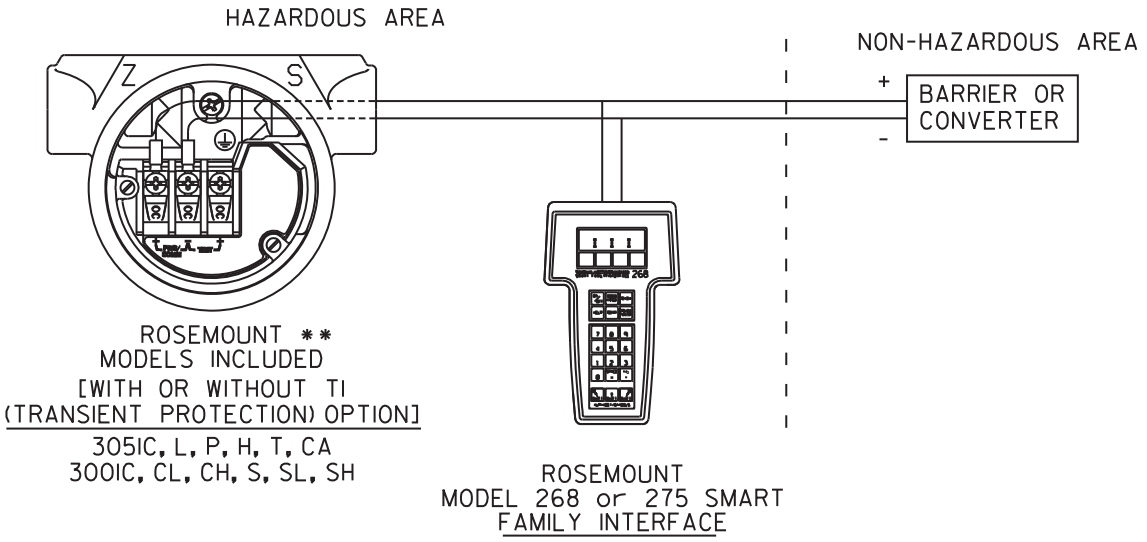

ROSEMOUNT **
MODELS INCLUDED
[WITH OR WITHOUT TI
(TRANSIENT PROTECTION) OPTION]
305IC, L, P, H, T, CA
300IC, CL, CH, S, SL, SH

ROSEMOUNT
MODEL 268 or 275 SMART
FAMILY INTERFACE

** FOR THE LOW POWER OPTION, SEE PAGE 4 FOR THE CIRCUIT CONNECTION WITH BARRIER OR CONVERTER. FOR FIELDBUS OPTIONS("F" or "W" OUTPUT CODE), SEE PAGE 5 FOR PARAMETERS AND CIRCIUT CONNECTION TO BARRIER.

Rosemount Inc. 8200 Market Boulevard Chanhassen, MN 55317 USA			CAD MAINTAINED (MicroStation)
DR. Mike Debe 08/27/90	SIZE A	FSCM NO	DWG NO. 03031-1024
ISSUED	SCALE N/A	WT. ———	SHEET 2 OF 9

REVISIONS				
REV	DESCRIPTION	CHG. NO.	APP'D	DATE
AD				

4-20 mA, ("A" OUTPUT CODE)

DEVICE	PARAMETERS	APPROVED FOR CLASS I, DIV.I
CSA APPROVED SAFETY BARRIER	30 V OR LESS *330 OHMS OR MORE * 28 V OR LESS 300 OHMS OR MORE 25 V OR LESS 200 OHMS OR MORE * 22 V OR LESS 180 OHMS OR MORE	GROUPS A, B, C, D
FOXBORO CONVERTER 2AI-I2V-CGB, 2AI-I3V-CGB, 2AS-I3I-CGB, 3A2-I2D-CGB, 3A2-I3D-CGB, 3AD-I3I-CGB, 3A4-I2D-CGB, 2AS-I2I-CGB, 3F4-I2DA		GROUPS B, C, D
CSA APPROVED SAFETY BARRIER	30 V OR LESS 150 OHMS OR MORE	GROUPS C, D

LOW POWER, ("M" OUTPUT CODE)

DEVICE	PARAMETERS	APPROVED FOR CLASS I, DIV.I
	Supply ≤ 28V, ≥ 300 Ω Return ≤ 10V, ≥ 47 Ω	GROUPS A, B, C, D
CSA APPROVED SAFETY BARRIER	Supply ≤ 30V, ≥ 150 Ω Return ≤ 10V, ≥ 47 Ω	GROUPS C, D

* MAY BE USED WITH ROSEMOUNT MODEL 268 or 275 SMART FAMILY INTERFACE.

Rosemount Inc. 8200 Market Boulevard Chanhassen, MN 55317 USA			CAD MAINTAINED (MicroStation)	
DR. Mike Debe	SIZE A	FSCM NO	DWG NO. 03031-1024	
ISSUED	SCALE N/A	WT. ———	SHEET 3 OF 9	

REVISIONS				
REV	DESCRIPTION	CHG. NO.	APP'D	DATE
AD				

CSA INTRINSIC SAFETY APPROVALS

305IC LOW POWER CIRCUIT CONNECTION WITH INTRINSIC SAFETY BARRIERS

Ex ia

INTRINSICALLY SAFE/SECURITE INTRINSEQUE
LOWPOWER, ("M" OUTPUT CODE)

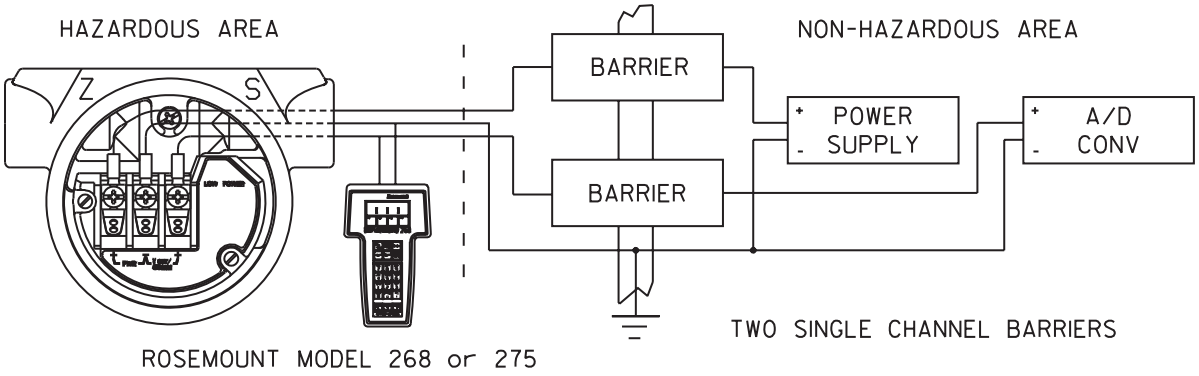

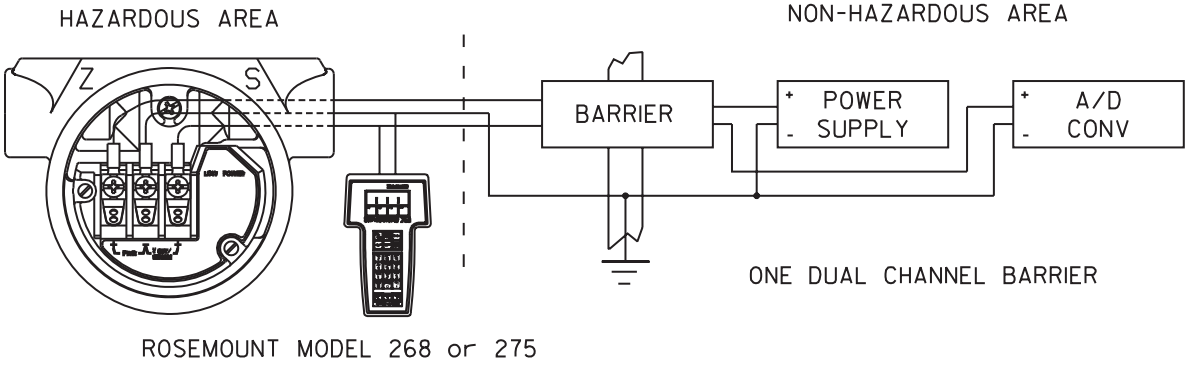

APPROVED FOR CLASS I, DIVISION I, GROUPS A,B,C,D WHEN USED IN CIRCUIT WITH TWO CSA APPROVED SINGLE CHANNEL SAFETY BARRIERS, ONE WITH APPROVED SAFETY PARAMETERS OF 28 VOLTS OR LESS AND 300 OHMS OR MORE IN +PWR LINE, AND ONE WITH APPROVED SAFETY PARAMETERS OF 10 VOLTS OR LESS AND 47 OHMS OR MORE IN Vout LINE, OR ONE CSA APPROVED DUAL CHANNEL SAFETY BARRIER WITH IDENTICAL APPROVED SAFETY PARAMETERS CONNECTED IN LIKE MANNER, AS ABOVE.

APPROVED FOR CLASS I, DIVISION I, GROUPS C,D WHEN USED IN CIRCUIT WITH TWO CSA APPROVED SINGLE CHANNEL SAFETY BARRIERS, ONE WITH APPROVED SAFETY PARAMETERS OF 30 VOLTS OR LESS AND 150 OHMS OR MORE IN +PWR LINE AND ONE WITH APPROVED SAFETY PARAMETERS OF 10 VOLTS OR LESS AND 47 OHMS OR MORE IN Vout LINE.

Rosemount Inc. **8200 Market Boulevard** **Chanhassen, MN 55317 USA**			CAD MAINTAINED (MicroStation)
DR. **SANDI MANSON**	SIZE A	FSCM NO	DWG NO. 03031-1024
ISSUED	SCALE N/A	WT. ———	SHEET 4 OF 9

REVISIONS				
REV	DESCRIPTION	CHG. NO.	APP'D	DATE
AD				

FIELDBUS, ("F" or "W" OUTPUT CODE)

DEVICE	PARAMETERS	APPROVED FOR CLASS I, DIV.I
CSA APPROVED SAFETY BARRIER	30 V OR LESS 300 OHMS OR MORE 28 V OR LESS 235 OHMS OR MORE 25 V OR LESS 160 OHMS OR MORE 22 V OR LESS 100 OHMS OR MORE	GROUPS A, B, C, D

CSA INTRINSIC SAFETY APPROVALS

CIRCUIT CONNECTION WITH BARRIER OR CONVERTER

Ex ia

INTRINSICALLY SAFE/SECURITE INTRINSEQUE
FIELDBUS, ("F" or "W" OUTPUT CODE)

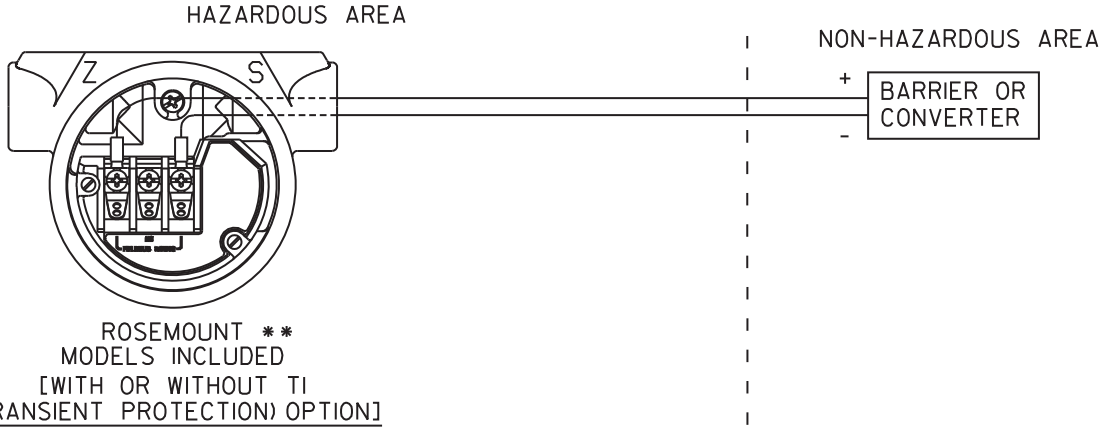

ROSEMOUNT **
MODELS INCLUDED
[WITH OR WITHOUT TI
(TRANSIENT PROTECTION) OPTION]
3051C, L, P, H, T, CA
3001C, CL, CH, S, SL, SH

WARNING - EXPLOSION HAZARD - SUBSTITUTION OF COMPONENTS MAY IMPAIR SUITABILITY FOR CLASS I, DIVISION 2.

AVERTISSEMENT - RISQUE D'EXPLOSION - LA SUBSTITUTION DE COMPOSANTS PEUT RENDRE CE MATERIEL INACCEPTABLE POUR LES EMPLACEMENTS DE CLASSE I, DIVISION 2.

Rosemount Inc. 8200 Market Boulevard Chanhassen, MN 55317 USA			CAD MAINTAINED (MicroStation)
DR. Myles Lee Miller	SIZE A	FSCM NO	DWG NO. 03031-1024
ISSUED	SCALE N/A	WT. ———	SHEET 5 OF 9

REVISIONS				
REV	DESCRIPTION	CHG. NO.	APP'D	DATE
AD				

FISCO CONCEPT APPROVALS

THE FISCO CONCEPT ALLOWS INTERCONNECTION OF INTRINSICALY SAFE APPARATUS TO ASSOCIATED APPARATUS NOT SPECIALLY EXAMINED IN SUCH COMBINATION. FOR THIS INTERCONNECTION TO BE VALID THE VOLTAGE (U_i or Vmax), THE CURRENT (I_i or Imax), AND THE POWER (P_i or Pma) THAT INTRINSICALLY SAVE APPARATUS CAN RECEIVE AND REMAIN INTRINSICALY SAFE, INCLUDING FAULTS, MUST BE EQUAL OR GREATER THAN THE VOLTAGE (Uo, Voc, or Vt), THE CURRENT (Io, Isc, or It), AND THE POWER (Po or Pmax) LEVELS WHICH CAN BE DELIVERED BY THE ASSOCIATED APPARATUS, CONSIDERING FAULTS AND APPLICABLE FACTORS. ALSO, THE MAXIMUM UNPROTECTED CAPACITANCE (C_i) AND THE INDUCTANCE (L_i) OF EACH APPARATUS (BESIDES THE TERMINATION) CONNECTED TO THE FIELDBUS MUST BE LESS THAN OR EQUAL TO 5nF AND 10µH RESPECTVELY.
ONLY ONE ACTIVE DEVICE IN EACH SECTION (USUALLY THE ASSOCIATED APPARATUS) IS ALLOWED TO CONTRIBUTE THE DESIRED ENERGY FOR THE FIELDBUS SYSTEM. THE ASSOCIATED APPARATUS' VOLTAGE Uo (or Voc or Vt) IS LIMITED TO A RANGE OF 14V TO 24 V.D.C. ALL OTHER EQUIPENT COMBINED IN THE BUS CABLE MUST BE PASSIVE (THEY CANNOT PROVIDE ENERGY TO THE SYSTEM, EXCEPT A LEAKAGE CURRENT OF 50 µA FOR EACH CONNECTED DEVICE) SEPARATELY POWERED EQUIPMENT REQUIRES A GALVANIC ISOLATION TO AFFIRM THAT THE INTRINSICALLY SAFE FIELDBUS CIRCUIT WILL REMAIN PASSIVE. THE PARAMETER OF THE CABLE USED TO INTERCONNECT THE DEVICES MUST BE IN THE FOLLOWING RANGE:

LOOP RESISTANCE R':	15...150 OHM/km
INDUCTANCE PER UNIT LENGTH L':	0.4...1mH/KM
CAPACITANCE PER UNLIT LENGTH C':	80...200nF

C' = C' LINE/LINE +0.5C' LINE/SCREEN, IF BOTH LINES ARE FLOATING, OR
C' = C' LINE/LINE +C' LINE/SCREEN, IF THE SCREEN IS CONNECTED TO ONE LINE

TRUNK CABLE LENGTH:	≤ 1000 m
SPUR CABLE LENGTH:	≤ 30 m
SPLICE LENGTH:	≤ 1 m

AN APPROVED INFALLIBLE LINE TERMINATION TO EACH END OF THE TRUNK CABLE, WITH THE FOLLOWING PARAMETERS IS APPROPRIATE:

R = 90...100 OHMS C = 2.2µF

AN ALLOWED TERMINATION MIGHT ALREADY BE LINKED IN THE ASSOCIATED APPARATUS. DUE TO I.S. REASONS, THE NUMBER OF PASSIVE APPARATUS CONNECTED TO THE BUS SEGMENT IS NOT LIMITED. IF THE RULES ABOVE ARE FOLLOWED, UP TO A TOTAL LENGTH OF 1000 m (THE SUMMATION OF TRUNK AND ALL SPUR CABLES), THE INDUCTANCE AND THE CAPACITANCE OF THE CABLE WILL NOT DAMAGE THE INTRINSIC SAFETY OF THE SYSTEM.

NOTES:
INTRINSICALLY SAFE CLASS I, DIV. 1, GROUPS A, B, C, D

1. THE MAXIMUM NON-HAZARDOUS AREA VOLTAGE MUST NOT EXCEED 250 V.
2. CAUTION: ONLY USE SUPPLY WIRES SUITABLE FOR 5°C ABOVE SURROUNDING TEMPERATURE.
3. WARNING: REPLACEMENT OF COMPONENTS MAY DAMAGE INTRINSIC SAFETY.

Rosemount Inc. 8200 Market Boulevard Chanhassen, MN 55317 USA			CAD MAINTAINED (MicroStation)	
DR. Myles Lee Miller	SIZE A	FSCM NO	DWG NO. 03031-1024	
ISSUED	SCALE N/A	WT. ———	SHEET 6 OF 9	

REVISIONS				
REV	DESCRIPTION	CHG. NO.	APP'D	DATE
AD				

HAZARDOUS (CLASSIFIED) LOCATION
CLASS I, DIVISION I, GROUPS A,B,C,D
CLASS II, DIVISION I, GROUPS E,F,G
CLASS III, DIVISION I

NON-HAZARDOUS AREA

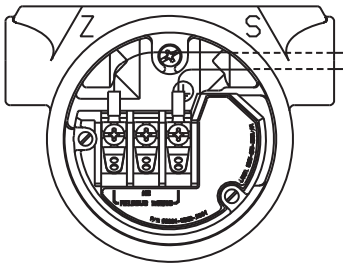

OUTPUT CODE F or W
MODELS INCLUDED
305IC, L, P, H, T, CA
300IC, CL, CH

ANY CSA APPROVED ASSOCIATED APPARATUS SUITABLE FOR FISCO CONCEPT

ANY CSA APPROVED INTRINSICALLY SAFE APPARATUS SUITABLE FOR FISCO CONCEPT

ANY CSA PPROVED TERMINATION WITH
R=90...100 Ohms
C=0...2.2 uF

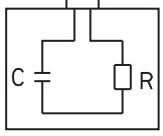

Rosemount Inc. 8200 Market Boulevard Chanhassen, MN 55317 USA			CAD MAINTAINED (MicroStation)	
DR. Myles Lee Miller	SIZE A	FSCM NO	DWG NO. 03031-1024	
ISSUED	SCALE N/A	WT. ———	SHEET 7 OF 9	

REVISIONS				
REV	DESCRIPTION	CHG. NO.	APP'D	DATE
AD				

3051 I.S. ENTITY PARAMETERS. (OUTPUT CODE A,F, or W)

BARRIER PARAMETERS (APPLICABLE TO OUTPUT CODE A,F, or W)

Pmax = 1.3 WATT OUTPUT F or W
Pmax = 1.0 WATT OUTPUT A

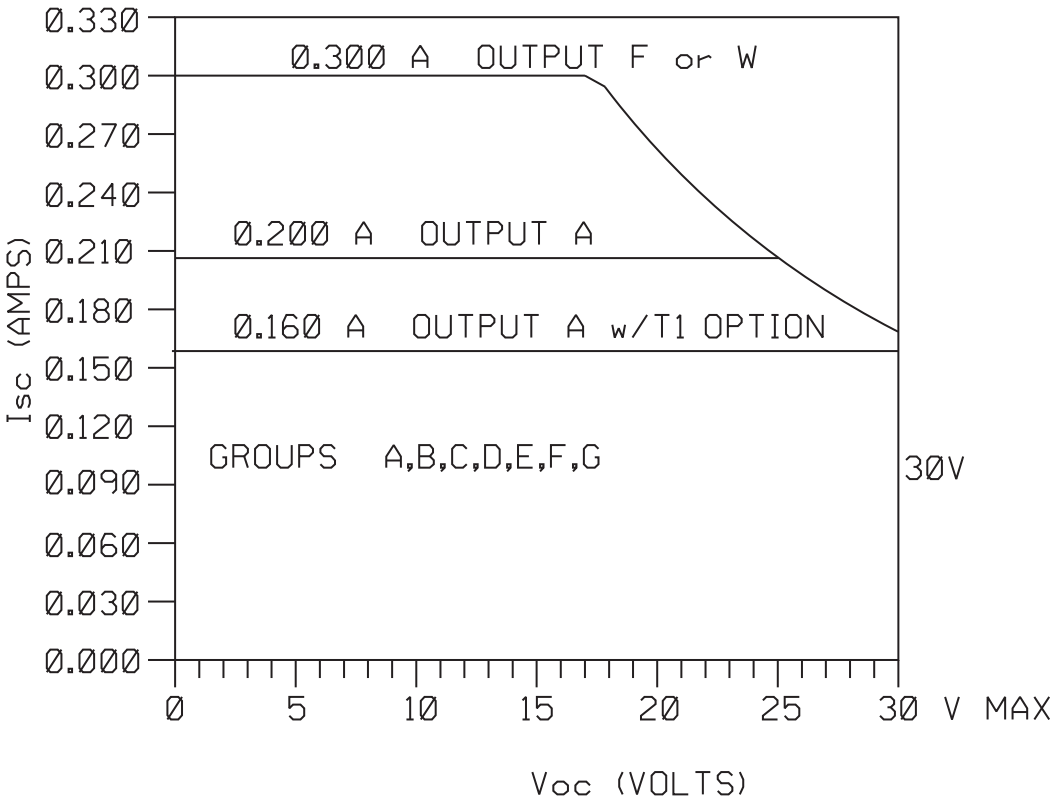

Rosemount Inc. 8200 Market Boulevard Chanhassen, MN 55317 USA			CAD MAINTAINED (MicroStation)	
DR. JON STEFFENS	SIZE A	FSCM NO	DWG NO. 03031-1024	
ISSUED	SCALE N/A	WT. ———	SHEET 8 OF 9	

REVISIONS				
REV	DESCRIPTION	CHG. NO.	APP'D	DATE
AD				

ENTITY CONCEPT APPROVALS

THE ENTITY CONCEPT ALLOWS INTERCONNECTION OF INTRINSICALLY SAFE APPARATUS TO ASSOCIATED APPARATUS NOT SPECIFICALLY EXAMINED IN COMBINATION AS A SYSTEM. THE APPROVED VALUES OF MAX. OPEN CIRCUIT VOLTAGE (Voc) AND MAX. SHORT CIRCUIT CURRENT (Isc) AND MAX. POWER (Voc X Isc/4), FOR THE ASSOCIATED APPARATUS MUST BE LESS THAN OR EQUAL TO THE MAXIMUM SAFE INPUT VOLTAGE (Vmax), MAXIMUM SAFE INPUT CURRENT (Imax), AND MAXIMUM SAFE INPUT POWER (Pmax) OF THE INTRINSICALLY SAFE APPARATUS. IN ADDITION, THE APPROVED MAX. ALLOWABLE CONNECTED CAPACITANCE (Ca) OF THE ASSOCIATED APPARATUS MUST BE GREATER THAN THE SUM OF THE INTERCONNECTING CABLE CAPACITANCE AND THE UNPROTECTED INTERNAL CAPACITANCE (C_i) OF THE INTRINSICALLY SAFE APPARATUS, AND THE APPROVED MAX. ALLOWABLE CONNECTED INDUCTANCE (La) OF THE ASSOCIATED APPARATUS MUST BE GREATER THAN THE SUM OF THE INTERCONNECTING CABLE INDUCTANCE AND THE UNPROTECTED INTERNAL INDUCTANCE (L_i) OF THE INTRINSICALLY SAFE APPARATUS.

FOR OUTPUT CODE A

CLASS I, DIV. 1, GROUPS A, B, C AND D

V_{MAX} = 30V	V_{OC} IS LESS THAN OR EQUAL TO 30V
I_{MAX} = 200mA	I_{SC} IS LESS THAN OR EQUAL TO 200mA
P_{MAX} = 1 WATT	$(\frac{Voc \times Isc}{4})$ IS LESS THAN OR EQUAL TO 1 WATT
C_I = .01μf	C_A IS GREATER THAN .01μf + C CABLE
L_I =10μH	L_A IS GREATER THAN 10μH + L CABLE

* FOR T1 OPTION:

Imax = 160mA	I_{SC} IS LESS THAN OR EQUAL TO 160mA
L_I =1.05mH	L_A IS GREATER THAN 1.05mH + L CABLE

FOR OUTPUT CODE F or W

CLASS I, DIV. 1, GROUPS A, B, C AND D

V_{MAX} = 30V	V_{OC} IS LESS THAN OR EQUAL TO 30V
I_{MAX} = 300mA	I_{SC} IS LESS THAN OR EQUAL TO 300mA
P_{MAX} = 1.3 WATT	$(\frac{Voc \times Isc}{4})$ IS LESS THAN OR EQUAL TO 1.3 WATT
C_I = 0μf	C_A IS GREATER THAN 0μf + C CABLE
L_I = 0μH	L_A IS GREATER THAN 0μH + L CABLE

NOTE: ENTITY PARAMETERS LISTED APPLY ONLY TO ASSOCIATED APPARATUS WITH LINEAR OUTPUT.

Rosemount Inc. 8200 Market Boulevard Chanhassen, MN 55317 USA			CAD MAINTAINED (MicroStation)
DR. JON STEFFENS	SIZE A	FSCM NO	DWG NO. 03031-1024
ISSUED	SCALE N/A	WT. ———	SHEET 9 OF 9

Index

A

Address
- Changing . . . 69

Alarm . . . 62
- Burst mode values . . . 62
- Configuration procedure . . . 20
- Failure mode . . . 61
- Level verification . . . 62
- Multidrop mode values . . . 62

Analog output trim . . . 77

Approval
- Drawings
  - Canadian Standards Association . . . 197
  - Factory Mutual . . . 184
- Information . . . 175

Approval drawings . . . 184

B

Basic setup . . . 52

Bench hook-up . . . 41

Block diagram . . . 4

Board, electronics . . . 21

Bolts
- Installation . . . 11, 13
- Material . . . 13

Brackets
- Mounting . . . 10

Bubbler Liquid Level Measurement . . . 38

Bubbler System in Open Vessel . . . 36
- Liquid Level Measurement . . . 36

Burst mode
- Advanced functions . . . 67
- Alarm and saturation values . . . 62

C

Calibration . . . 72
- Choosing a procedure . . . 76
- Frequency, determining . . . 74
- Full trim . . . 83
- Recal factory trim
  - Analog output . . . 80
  - Sensor trim . . . 84
- Sensor trim . . . 81
- Tasks . . . 74
- Zero trim . . . 82

Certifications . . . 175

Cloning . . . 64

Closed Vessels
- Dry Leg Condition . . . 36
- Liquid Level Measurement . . . 35
- Wet Leg Condition . . . 36

Communicator . . . 94

Compensating line pressure . . . 85

Configuration . . . 39
- Applying a user configuration . . . 66
- Cloning . . . 64
- Data review . . . 42
- LCD display
  - Custom . . . 59
- LCD meter . . . 58
- Recalling . . . 64
- Reusable copy . . . 66
- Saving . . . 64

Considerations
- Compatibility . . . 7
- Draft range . . . 7
- Environmental . . . 8
- General . . . 6
- Mechanical . . . 7

Curr Fixed . . . 93

Curr Saturd . . . 93

Custom configuration
- LCD display . . . 59

D

Damping . . . 7, 57

Detailed setup . . . 61, 62

Diagnostics
- Messages . . . 93
  - Curr Fixed . . . 93
  - Curr Saturd . . . 93
  - Error . . . 92
  - Fail . . . 92
  - Fail Config . . . 92
  - Fail Elect . . . 92
  - Fail Module . . . 92
  - HART Communicator . . . 94
  - Local Dsbld . . . 94
  - Loop test . . . 93
  - Operation . . . 93
  - Press Limit . . . 93
  - Span Fail . . . 94
  - Span Pass . . . 93
  - Temp Limit . . . 93
  - Warnings . . . 92
  - Write protect . . . 94
  - Zero Fail . . . 93
  - Zero Pass . . . 93

Diagnostics and service . . . 62
- Loop
  - Test . . . 62

Diagrams
Bench hook-up 41
Low power 41
Multidrop network 68
Typical multidrop network 68
Digital to analog trim 77
Other scale 79
Disassembly
Before disassembling 97
Remove electronics board 99
Remove from service 98
Sensor module 99
Disassembly procedures 97
Draft Range 7
Draft range 7
Damping 7
Installation 7
Process noise 7
Side filtering 7
Drawings
Approval 184
Canadian Standards Association 197
Factory Mutual 184
Dry Leg Condition
Liquid Level Measurement 36

E

Electrical Installation Considerations
Grounding 23
Signal and Test Terminals 23
Wiring 23
Electronics board 21
Low power 21
Environmental Considerations 29
Environmental considerations 8
Error 92

F

Fail 92
Config 92
Elect 92
Module 92
Failure mode
Alarm values 61
Saturation values 61
Features 2
Filtering
Draft range 7
Foundation fieldbus 3
Full trim 83

G

Grounding 23
Transmitter Case 28

H

HART Communicator
Diagnostics 94
Hazardous Locations 31
Housing
Remove 99

I

Impulse piping 14
Installation 5, 10
Bolts 11, 13
Cover 10
Draft range 7
Environmental Considerations 29
Examples 16
HART flowchart 9
Hazardous Locations 31
Housing rotation 18
Mechanical considerations 7
Model 305 manifold 31
Model 306 manifold 31
Mounting 10
Brackets 10
Process Flange Orientation 10
Signal Wiring Grounding 28
Introduction 1

J

Jumper
Alarm 20
Security 20

L

LCD display
Custom configuration 59
LCD meter 58
Configuration 58
Options 59
Lightning 26
Line pressure
Compensating 85
Liquid Level Measurement
Bubbler System in Open Vessel 36
Closed Vessels 35
Dry Leg Condition 36
Open Vessels 35
Wet Leg Condition 36
Local Dsbld 94
Loop
Setting to manual 40
Test 93
Loop test 62

Low power
Diagrams 41
Electronics board 21
Menu tree 45

M

Maintenance 71
Manifold installations 31
Manual
Models covered 2
Use of 1
Mechanical considerations 7
Menu tree
Low power 45
Meter, LCD display 59
Model 275 HART Communicator 45
Mounting
Installation 10
Requirements 15
Multidrop communication 62
Advanced functions 68
Communicating 69
Diagram 68

N

NAMUR-compliant values 61
Noise
Draft range 7

O

Open Vessels
Liquid Level Measurement 35
Operation 71, 93
Block diagram 4
Options
LCD meter 59
Ordering Information
Model 3051C 131
Output
Process variables 50
Recal factory trim 80
Sensor temperature 50
Transfer function 52

P

Parts list 164
Piping, impulse 14
Press Limit 93
Process
Connections 16
Process variables 50
Units 52
Product certifications 175

R

Reassembly
Attaching sensor module 100
Installing terminal block 101
Process sensor body 101
Recall factory trim
Analog output 80
Sensor trim 84
Recalling 64
Rerange 53
AMS only 57
HART Communicator only 55
Pressure input source
With HART Communicator 55
With local zero and span 56
Returning products and materials 102
Reusable copy 66

S

Saturation
Burst mode values 62
Failure mode 61
Multidrop mode values 62
Saving a configuration 64
Security 20
Sensor
Module
Installing 100
Removing 99
Sensor Temperature 51
Sensor temperature 50
Sensor trim 81
Service and Diagnostics 62
Service Support 1
Setup
Basic 52
Detailed 61, 62
Signal Wiring Grounding 28
Software
Lock out 20
Span
Button 20
Fail 94
Pass 93
Spare parts list 164
Support 1

T

Temp limit 93
Terminal block
Installing 101
Terminal Side 10
Transfer function 52
Transmitter Case 28

Trim
- Analog output 77
- Digital to Analog 77
  - Other scale 79
- Full 83
- Recall factory
  - Analog output 80
  - Sensor trim 84
- Sensor 81
- Zero 82

Troubleshooting
- Reference table 91

U

Units,Process variable 52

V

Vessels
- Open/Closed 35

W

Warnings 92
Wet Leg Condition
- Example (Figure 4-6) 37
- Liquid Level Measurement 36

Wiring 23
- Diagrams
  - Bench hook-up 41
  - Low power 41
- Signal Terminals 23
- Test Terminals 23

Write protect 20, 94

X

Xmtr Info 93

Z

Zero
- Button 20
- Fail 93
- Pass 93

Zero trim 82

Standard Terms and Conditions of Sale can be found at www.rosemount.com/terms_of_sale
The Emerson logo is a trademark and service mark of Emerson Electric Co.
Rosemount. the Rosemount logotype, and SMART FAMILY are registered trademarks of Rosemount Inc.
Coplanar is a trademark of Rosemount Inc.
Halocarbon is a trademark of the Halocarbon Products Corporation.o.
Fluorinert is a registered trademark of Minnesota Mining and Manufacturing Company Corporation
Syltherm 800 and D.C. 200 are registered trademarks of Dow Corning Corporation.
Neobee M-20 is a registered trademark of PVO International, Inc.
HART is a registered trademark of the HART Communication Foundation.
Foundation fieldbus is a registered trademark of the Fieldbus Foundation.
All other marks are the property of their respective owners.

© November 2012 Rosemount, Inc. All rights reserved.

Emerson Process Management
Rosemount Measurement
8200 Market Boulevard
Chanhassen MN 55317 USA
Tel (USA) 1 800 999 9307
Tel (International) +1 952 906 8888
Fax +1 952 906 8889

Emerson Process Management
GmbH & Co.
Argelsrieder Feld 3
82234 Wessling
Germany
Tel 49 (8153) 9390
Fax 49 (8153) 939172

Emerson Process Management Asia
Pacific Private Limited
1 Pandan Crescent
Singapore 128461
T (65) 6777 8211
F (65) 6777 0947
Enquiries@AP.EmersonProcess.com

Beijing Rosemount Far East
Instrument Co., Limited
No. 6 North Street,
Hepingli, Dong Cheng District
Beijing 100013, China
T (86) (10) 6428 2233
F (86) (10) 6422 8586

ROSEMOUNT

00809-0100-4001 Rev JA, 11/12

EMERSON.
Process Management

Product Data Sheet
00813-0100-4733, Rev NB
January 2011

Rosemount Manifolds

- *Factory assembled, leak-tested, and calibrated*
- *Full breadth of offering including integral, conventional, and inline designs*
- *Integral design enables “flangeless” valve integration*
- *2, 3, and 5 valve configurations*
- *Compact, lightweight design*
- *Easy in-process calibration*
- *Direct-mount capability*



Contents

Rosemount Manifolds Selection Guide . . . . . page 2
Valve Configuration . . . . . page 3
Ordering Information . . . . . page 5
Specifications . . . . . page 11
Dimensional Drawings. . . . . page 17

Rosemount Manifolds Selection Guide

ROSEMOUNT 304 CONVENTIONAL MANIFOLD

See “Options” on page 27.

- Attaches to transmitter flange
- 2, 3, and 5-valve configurations
- Traditional (Flange x Flange, Flange x NPT) & Wafer styles
- Factory assembled, seal-tested, and calibrated

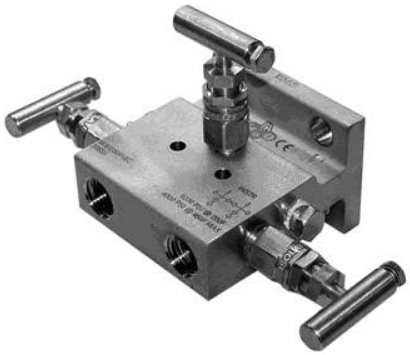

Rosemount 304 Conventional Manifold-Traditional Style



Rosemount 304 Conventional Manifold-Wafer Style

ROSEMOUNT 305 INTEGRAL MANIFOLD

See “Options” on page 27.

- Assembles directly to transmitter, eliminating need for flange
- 2, 3, and 5-valve configuration
- Available in Coplanar™ and traditional styles
- Compact, lightweight assembly
- Factory assembled, seal-tested, and calibrated
- 50% fewer leak points than conventional transmitter / flange / manifold interface



Rosemount 305 Integral Manifold Coplanar Style

ROSEMOUNT 306 INLINE MANIFOLD

See “Options” on page 27.

- Assembled directly to inline pressure transmitters
- Block-and-Bleed and 2-valve configurations
- Male or Female threaded NPT process connection



Rosemount 306 Inline Manifold

Valve Configuration

BLOCK-AND-BLEED

The block-and-bleed configuration is available on the Rosemount 306 Manifold for use with inline gage and absolute pressure transmitters. A single block valve provides instrument isolation and a plug provides drain/vent capabilities.

306 Manifold

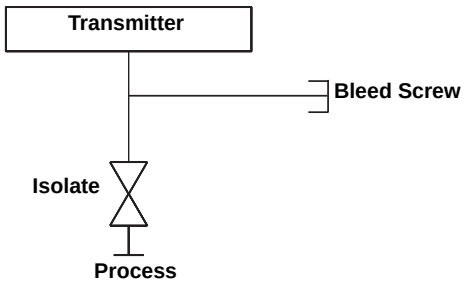

TWO-VALVE

The two-valve configuration is available on Rosemount 304, 305, and 306 Manifolds for use with absolute and gage pressure transmitters. A block valve provides instrument isolation and a drain/vent valve allows venting, draining, or calibration.

304 Manifold

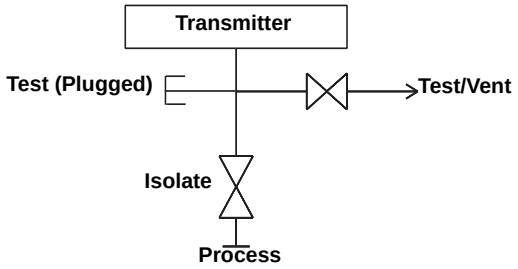

305 & 306 Manifolds

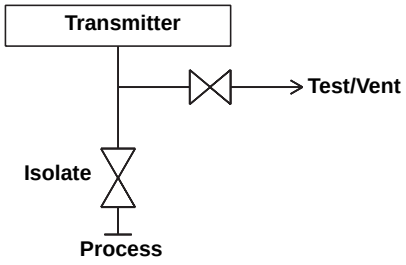

THREE-VALVE

The three-valve configuration is available on Rosemount 304 and 305 Manifolds for use with differential pressure and multivariable transmitters. Two block valves provide instrument isolation, and one equalize valve is positioned between the high and low transmitter process connections.

304 (Traditional) Manifold

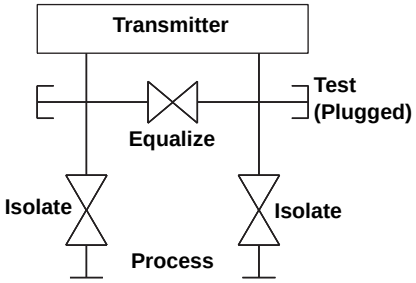

304 (Wafer) Manifold

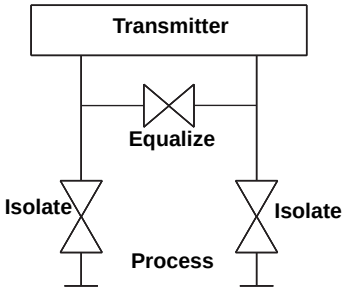

305 Manifold

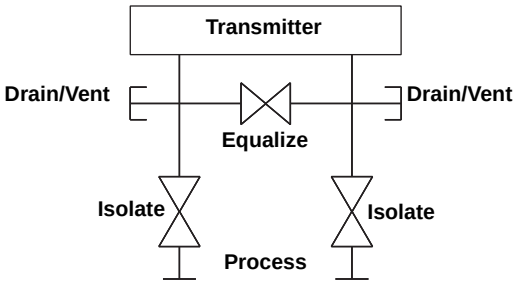

NOTE
Test/Vents receive plastic caps to protect threaded connections unless otherwise noted.

NOTE
Test (Plugged) connections receive ¼-in. NPT plugs unless otherwise noted.

FIVE-VALVE

The five-valve configuration is available on Rosemount 304 and 305 Manifolds for use with differential pressure and multivariable transmitters. Two block valves provide instrument isolation and one equalize valve is positioned between the high and low transmitter process connections. In addition, two drain/vent valves allow for controlled venting, 100% capture of vented or drained process, and simplified in-process calibration capability.

304 (Wafer) & 305 Manifolds

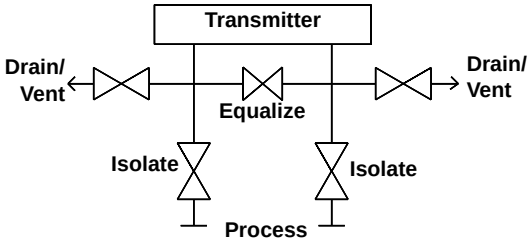

FIVE-VALVE NATURAL GAS

The five-valve natural gas configuration is available on the Rosemount 304 and 305 Manifolds for use with differential pressure and multivariable transmitters. Two block valves provide instrument isolation and a single drain/vent valve allows for controlled venting, 100% capture of vented or drained process, and simplified in-process calibration capability. In addition, two equalize valves provide extra protection from leaking to ensure DP signal integrity.

304 (Traditional) & 305 Manifolds

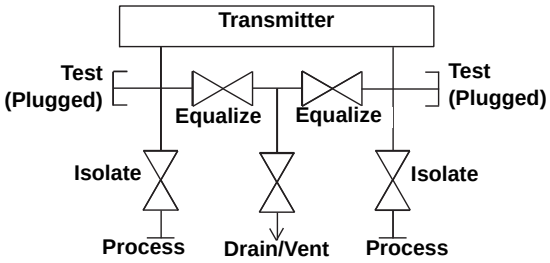

NOTE
Test/Vents receive plastic caps to protect threaded connections unless otherwise noted.

NOTE
Test (Plugged) connections receive ¼-in. NPT plugs unless otherwise noted.

Ordering Information

Rosemount Manifolds can be ordered as a stand-alone product or as an integrated assembly that is attached to a transmitter.

Stand-Alone Manifold:

1. Reference the “Rosemount Manifolds Selection Guide” (see page 2) for assistance on choosing the type of manifold needed.
2. Specify a completed model number by referencing the applicable ordering table for the selected manifold type:

   a. Rosemount 304 Conventional Manifold, see page 6.

   b. Rosemount 305 Integral Manifold, see page 8.

   c. Rosemount 306 Inline Manifold, see page 10.

Transmitter / Manifold Assembly:

1. Specify a completed Rosemount transmitter model number by referencing the applicable product data sheet.
2. Specify a completed manifold model number by referencing the applicable ordering table for the selected manifold type:

   a. Rosemount 304 Conventional Manifold, see page 6.

   b. Rosemount 305 Integral Manifold, see page 8.

   c. Rosemount 306 Inline Manifold, see page 10.
3. Verify the transmitter model number contains the correct “Process Connection” code or “Manifold Option” code for the desired transmitter manifold assembly (see Table 1).

Table 1. Ordering Codes for a Transmitter / Manifold Assembly

Transmitter	Manifold	Process Connection Code	“Manifold” Option Code
3051S	304	A12	–
	305	A11	–
	306	A11	–
3051/2051/3095	304	–	S6
	305	–	S5
	306	–	S5
1151	304	S6	–
	305	–	–
	306	–	–
2088	304	–	–
	305	–	–
	306	–	S5

Rosemount 304 Conventional Manifolds

Table 2. Rosemount 304 Conventional Manifold Ordering Information

★ The Standard offering represents the most common options. The starred options (★) should be selected for best delivery.
The Expanded offering is subject to additional delivery lead time.

Model	Product Description				
0304	Conventional Manifold				
Manufacturer					
Standard					**Standard**
R	Rosemount Inc.				★
Manifold Style					
Standard					**Standard**
T	Traditional (Flange x Flange or Flange x NPT)				★
Expanded					
W(1)	Wafer				
Manifold Type					
Standard					**Standard**
2(2)	2-valve				★
3	3-valve				★
5(3)	5-valve				★
6(2)	5-valve Natural Gas Metering Pattern				★
Expanded					
7(2)(4)	2-valve (per ASME B31.1 [ANSI] Power and Piping Code)				
8(2)(4)	3-valve (per ASME B31.1 [ANSI] Power and Piping Code)				
	Body	**Bonnet**	**Stem**	**Tip**	
Standard					**Standard**
2	316 SST	316 SST	316 SST	316 SST	★
5	CS	316 SST	316 SST	316 SST	★
Process Connection Style					
Standard					**Standard**
B	1/2-14 NPT				★
F(2)	Flanged				★
Packing Material					
Standard					**Standard**
1	PTFE				★
Expanded					
2(1)	Graphite-based				
Bolts					
Standard					**Standard**
1	For assembly to 2051/3051 Traditional Flange				★
2	For assembly to 2051/3051/3095 DIN Compliant Traditional Flange				★
3	For assembly to 2051/3051/3095 Coplanar Flange				★
Expanded					
4	For assembly to 1151 (Ranges 3-5)				

Options

Mounting Brackets		
Standard		**Standard**
VC(2)	Manifold Heavy Duty Mounting Bracket, CS for Traditional Style	★
VS(2)	Manifold Heavy Duty Mounting Bracket, SST for Traditional Style	★
B4(3)	Manifold SST Mounting Bracket for 2-in. pipe mount with series 300 SST bolts for wafer style	★
Adapters		
Standard		**Standard**
DF(5)	1/2-14 NPT Female Flange Adapter	★
DT(5)	1/2-in. ferrule flange adapter	★
DQ(5)	12 mm ferrule flange adapter	★

Table 2. Rosemount 304 Conventional Manifold Ordering Information

★ The Standard offering represents the most common options. The starred options (★) should be selected for best delivery.
The Expanded offering is subject to additional delivery lead time.

Bolt Material		
Standard		**Standard**
L4[6]	Austenitic 316 SST Bolts	★
L5	ASTM A 193, Grade B7M Bolts	★
L8	ASTM A 193, Class 2, Grade B8M Bolts	★
Material Recommendations for NACE		
Standard		**Standard**
SG[1][7]	Sour Gas (Meets NACE MR 0175 / ISO 15156, MR 0103)	★
Cleanings		
Expanded		
P2[8]	Cleaning for special service	
Heater Block Kits		
Standard		**Standard**
SB	Steam block kit, ¼-in. NPT connection	★
Typical Model Number:_ 0304_R_T_3_2_B_1_1_VS		

(1) Only allowed with Material of Construction code 2.

(2) Not available with Wafer Manifold Style code W.

(3) Not available with Traditional Manifold Style code T.

(4) Only available with 316 SST materials of construction code 2 and graphite based packing code 2.

(5) Only allowed with both Manifold Style code T and Process Connection code F. Not allowed with Graphite-based Packing Code 2.

(6) Not available with Manifold Type codes 7, 8.

(7) Materials of construction comply with recommendations per NACE MR 0175 / ISO 1516 for sour oil field production environments. Environmental limits apply to certain materials. Consult latest standard for details. Selected materials also conform to NACE MR 0103 for sour refining environments.

(8) Not available with Graphite-Based Packing Material code 2.

Rosemount 305 Integral Manifolds

Table 3. Rosemount 305 Integral Manifold Ordering Information

★ The Standard offering represents the most common options. The starred options (★) should be selected for best delivery.
The Expanded offering is subject to additional delivery lead time.

Model	Product Description			
0305	Integral Manifold			
Manufacturer				
Standard				**Standard**
R	Rosemount			★
Manifold Style				
Standard				**Standard**
C	Coplanar			★
T	Traditional			★
M	Traditional (Rosemount 3095-compatible; DIN-compliant flange)			★
Manifold Type				
Standard				**Standard**
2	2-valve			★
3	3-valve			★
5(1)	5-valve			★
6(2)	5-valve Natural Gas Metering Pattern			★
Expanded				
7(2)(3)	2-valve (per ASME B31.1 [ANSI] Power and Piping Code)			
8(2)(3)	3-valve (per ASME B31.1 [ANSI] Power and Piping Code)			
9(2)(3)	5-valve (per ASME B31.1 [ANSI] Power and Piping Code)			
	Body	**Bonnet**	**Stem and Tip / Ball**	
Standard				**Standard**
2	316 SST	316 SST	316 SST	★
Expanded				
3(4)	Alloy C-276	Alloy C-276	Alloy C-276	
4	Alloy 400	Alloy 400	Alloy 400 / K-500	
Process Connection Style				
Standard				**Standard**
A(5)	1/4–18 NPT female			★
B(6)	1/2–14 NPT female			★
Packing Material				
Standard				**Standard**
1	PTFE			★
Expanded				
2(7)	Graphite-based			
Valve Seat				
Standard				**Standard**
1	Integral			★
5	Soft delrin (only available with natural gas metering pattern)			★

Options

Mounting Brackets		
Standard		**Standard**
B1	Bracket for 2-in. pipe mounting, CS bolts	★
B3(8)	Flat bracket for 2-in. pipe mounting, CS bolts	★
B4	SST Mounting Bracket for 2-in. pipe mounting, 300 SST bolts	★
B7	B1 bracket with series 300 SST bolts	★
B9(8)	B3 bracket with series 300 SST bolts	★
BA	SST B1 bracket with series 300 SST bolts	★
BC(8)	SST B3 bracket with series 300 SST bolts	★

Table 3. Rosemount 305 Integral Manifold Ordering Information

★ The Standard offering represents the most common options. The starred options (★) should be selected for best delivery.
The Expanded offering is subject to additional delivery lead time.

Bolt Materials		
Standard		**Standard**
L4[9]	Austenitic 316 SST bolts	★
L5	ASTM-A-193-B7M bolts	★
L8	ASTM-A-193, Class 2, Grade B8M bolts	★
Cleanings		
Standard		**Standard**
P2[10]	Cleaning for special services	★
Material Recommendations for NACE		
Standard		**Standard**
SG[4][11]	Sour Gas (Meets NACE MR 0175 / ISO 15156, MR 0103)	★
Adapters		
Standard		**Standard**
DF[12]	1/2-14 NPT female flange adapter	★
Expanded		
DQ[12]	12 mm ferrule flange adapter	
Process Flange Bolting Connection		
Standard		**Standard**
HK[13]	10 mm (M10) process flange bolting connection	★
HL[13]	12 mm (M12) process flange bolting connection	★
Typical Coplanar Integral Manifold Model Number: 305RC32B11B4		
Typical Transmitter Model Number: 3051CD2A02A1AS5		

(1) Not available with traditional manifold style T.

(2) Only available with Coplanar manifold style code C.

(3) Only available with 316 SST materials of construction code 2 and graphite based backing code 2.

(4) Materials of Construction comply with recommendations per NACE MR 0175/ISO 15156 for sour oil field production environments. Environmental limits apply to certain materials. Consult latest standard for details. Selected materials also conform to NACE MR0103 for sour refining environments.

(5) Only available with traditional manifold style codes T and M.

(6) Not available with traditional manifold style code M.

(7) Includes graphite tape on drain/vent valves and plugs.

(8) Not compatible with the Rosemount 3095 transmitter.

(9) Not available with ASME B31.1 manifold type codes 7, 8, and 9.

(10) Not available with Graphite-Based Packing Material code 2.

(11) Only available with 316 SST Materials of Construction Code 2: 316 SST body and bonnets; Alloy C-276 stems, tip/balls, and drain/vents.

(12) Only allowed with Manifold Style code T. Not allowed with Graphite-Based Packing code 2.

(13) Only available with traditional manifold style code M.

Rosemount 306 Inline Manifolds

Table 4. Rosemount 306 Inline Pressure Manifold Ordering Information

★ The Standard offering represents the most common options. The starred options (★) should be selected for best delivery.
The Expanded offering is subject to additional delivery lead time.

Model	Product Description			
0306	Pressure Manifold			
Manufacturer				
Standard				**Standard**
R	Rosemount Inc.			★
Manifold Style				
Standard				**Standard**
T	Threaded			★
Manifold Type				
Standard				**Standard**
1	Block and bleed			★
2	2-valve			★
Expanded				
3(1)	2-valve (per ASME B31.1 Power Piping Code)			
	Body	**Bonnet**	**Stem and Tip / Ball**	
Standard				**Standard**
2	316 SST	316 SST	316 SST	★
Expanded				
3(2)(3)	Alloy C-276	Alloy C-276	Alloy C-276	
Process Connection				
Standard				**Standard**
AA	1/2–14 male NPT			★
BA(2)	1/2–14 female NPT			★
Packing Material				
Standard				**Standard**
1	PTFE			★
Expanded				
2(4)	Graphite-based			
Valve Seat				
Standard				**Standard**
1	Integral			★

Options

Cleanings		
Expanded		
P2(5)	Cleaning for special services	
Material Recommendations for NACE		
Standard		**Standard**
SG(3)(6)	Sour Gas (Meets NACE MR 0175 / ISO 15156, MR 0103)	★
Typical Integral Manifold Model Number: 3 0 6 R T 2 2 B A 1 1		
Typical Transmitter Model Number: 3051TG3A2B21AS5B4		

(1) Only available with 316 SST materials of construction and graphite-based packing.

(2) Not available with block-and-bleed manifold type

(3) Materials of Construction comply with recommendations per NACE MR0175/ISO 15156 for sour oil field production environments. Environmental limits apply to certain materials. Consult latest standard for details. Selected materials also conform to NACE MR0103 for sour refining environments.

(4) Includes graphite tape on plugs.

(5) Not available with Graphite-Based Packing Material code 2.

(6) Only available with 316 SST material of construction code 2. Manifolds with SG option are built with 316 SST body and bonnets; Alloy C-276 stems, tips/balls.

Specifications

Pressure and Temperature Ratings

Figure 1. 304 Conventional Manifolds - Pressure vs. Temperature

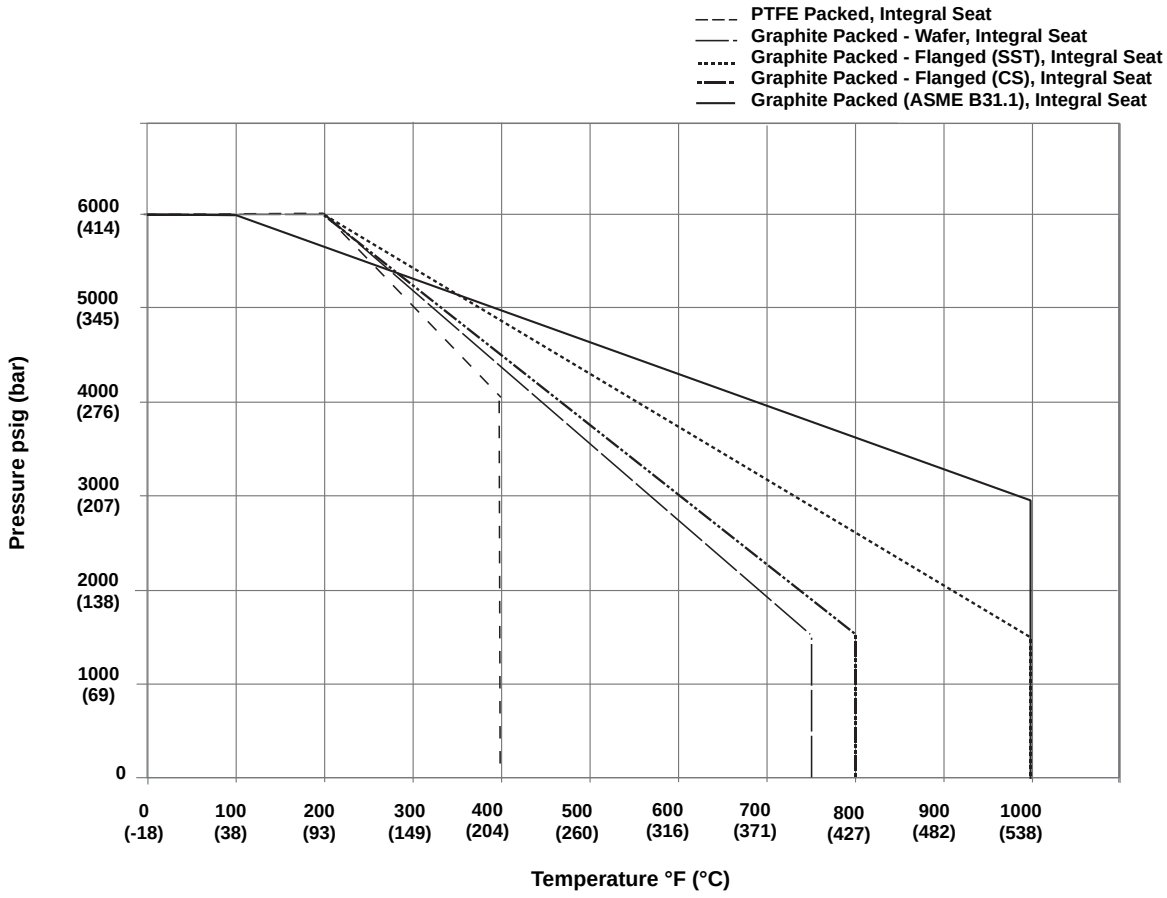

Table 5. 304 Conventional Manifolds - Pressure and Temperature Ratings

Packing	Seat	Pressure and Temperature Ratings
PTFE	Integral	6000 psi @ 200 °F (414 bar @ 93 °C) 4000 psi @ 400 °F (276 bar @ 204 °C)
Graphite - Wafer	Integral	6000 psi @ 200 °F (414 bar @ 93 °C) 1500 psi @ 750 °F (103 bar @ 399 °C)
Graphite - Flanged (SST)	Integral	6000 psi @ 200 °F (414 bar @ 93 °C) 1500 psi @ 1000 °F (103 bar @ 538 °C)
Graphite - Flanged (CS)	Integral	6000 psi @ 200 °F (414 bar @ 93 °C) 1500 psi @ 800 °F (103 bar @ 427 °C)
Graphite (ASME B31.1)	Integral	6000 psi @ 100 °F (414 bar @ 38 °C) 2915 psi @ 1000 °F (201 bar @ 538 °C)

Figure 2. 305 Integral Manifolds - Pressure vs. Temperature

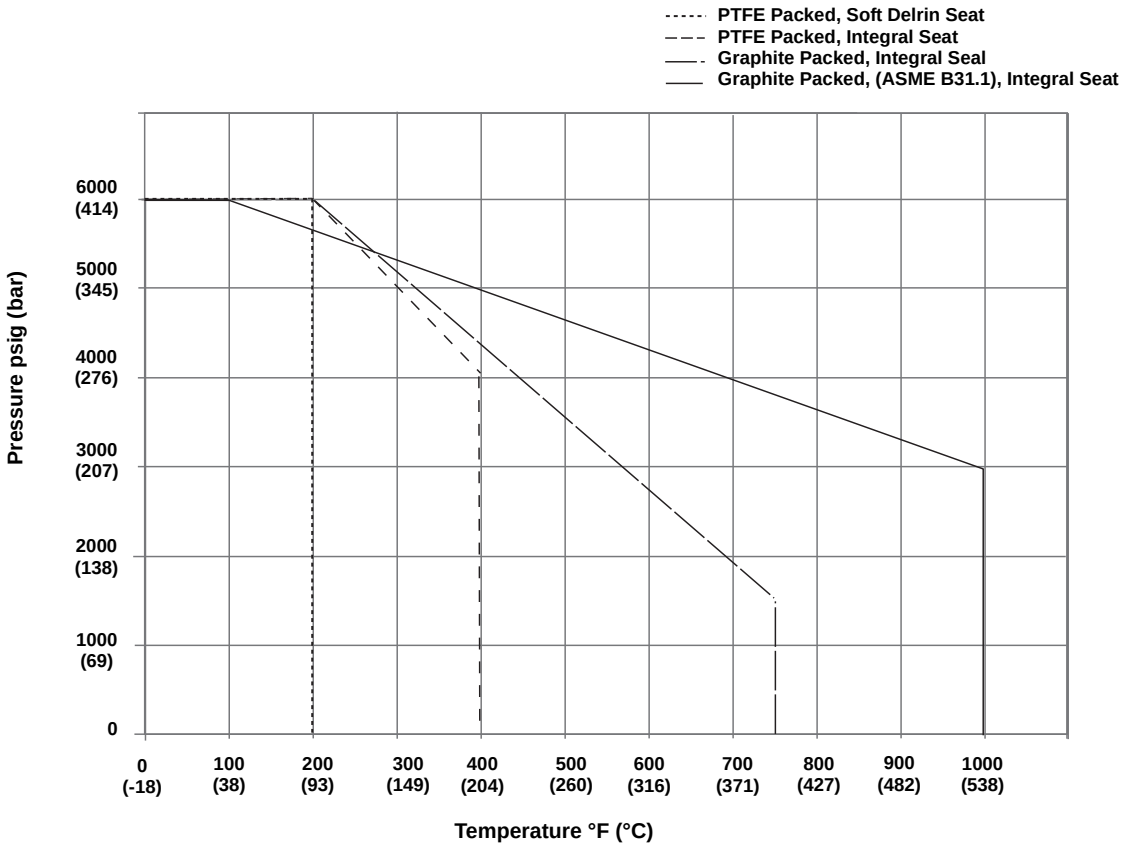

Table 6. 305 Integral Manifolds - Pressure and Temperature Ratings[(1)]

Packing[(1)]	Seat	Pressure and Temperature Ratings
PTFE	Integral	6092 psi @ 200 °F (420 bar @ 93 °C) 4000 psi @ 400 °F (276 bar @ 204 °C)
PTFE	Soft Delrin	6092 psi @ 200 °F (420 bar @ 38 °C)
Graphite	Integral	6092 psi @ 200 °F (420 bar @ 93 °C) 1500 psi @ 750 °F (103 bar @ 399 °C)
Graphite (ASME B31.1)	Integral	6092 psi @ 100 °F (420 bar @ 38 °C) 2915 psi @ 1000 °F (201 bar @ 538 °C)

(1) Except option HK:
PTFE, Integral seat: 2324 psi @ 200 °F (160 bar @ 93 °C), 1680 psi @ 400 °F (116 bar @ 204 °C)
Graphite, Integral seat: 2324 psi @ 200 °F (160 bar @ 93 °C), 1125 psi @ 750 °F (78 bar @ 399 °C)

Figure 3. 306 Integral Manifolds - Pressure vs. Temperature

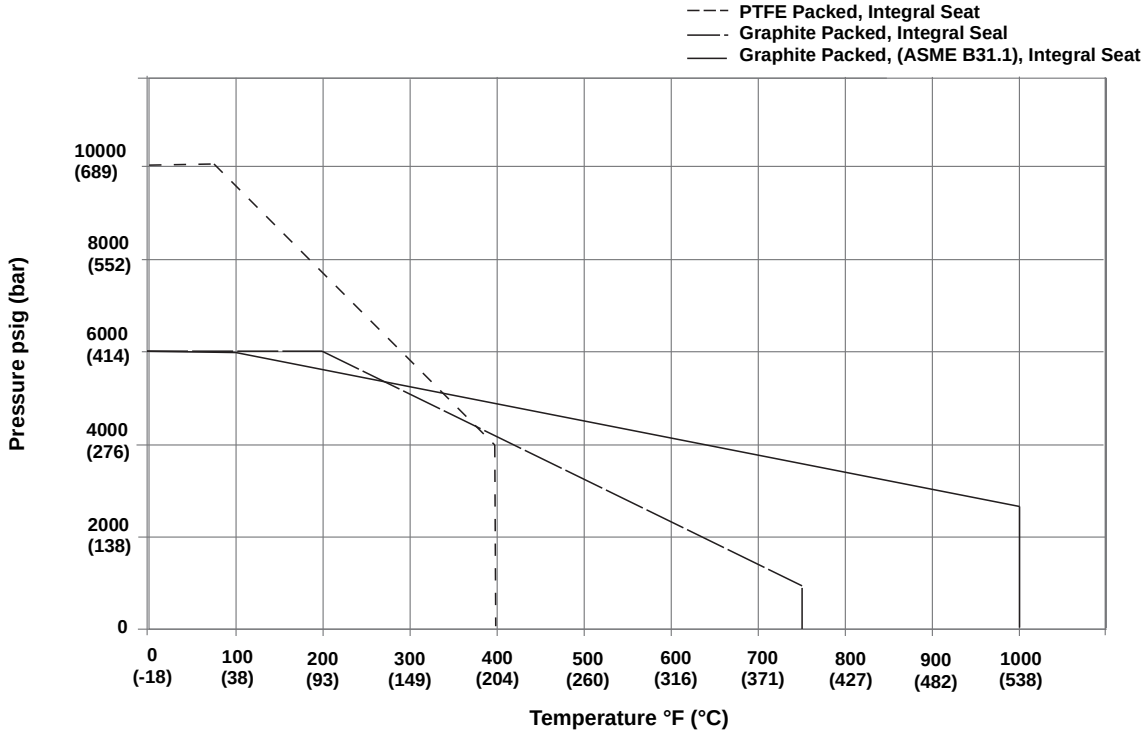

Table 7. 306 Integral Manifolds - Pressure and Temperature Ratings

Packing	Seat	Pressure and Temperature Ratings
PTFE	Integral	10000 psi @ 85 °F (689 bar @ 29 °C) 4000 psi @ 400 °F (276 bar @ 204 °C)
Graphite	Integral	6000 psi @ 200 °F (414 bar @ 93 °C) 1500 psi @ 750 °F (103 bar @ 399 °C)
Graphite (ASME B31.1)	Integral	6000 psi @ 100 °F (414 bar @ 38 °C) 2915 psi @ 1000 °F (201 bar @ 538 °C)

Process Connections

Table 8. Process Connections

Model and Style	Connection
304 Flange by Pipe Flange by Flange Wafer	 1/2 - 14 Female NPT 2 1/8-in. (54 mm) center-to-center connection (Process Adapters required) 1/2 - 14 Female NPT Process Adapters 1/2 - 14 Female NPT Flange Adapter 1/2-in. Ferrule Flange Adapter 12-mm Ferrule Flange Adapter
305 Coplanar Traditional	 1/2 - 14 Female NPT 1/4 - 18 Female NPT (Process Adapters optional) Optional Process Adapters 1/2 - 14 Female NPT Flange Adapter 12 mm Ferrule Flange Adapter
306 Block-and-Bleed 2-Valve	 1/2 - 14 Male NPT 1/2 - 14 NPT (Male or Female)

Instrument Connections

Table 9. Manifold - Transmitter Interface

Model	Connection
304	Mounted to traditional transmitter flange, 2 1/8-in. (54 mm) center-to-center connection per IEC 61518, Type B shut-off device (without SPIGOT)
305	Mounted directly to Coplanar sensor module of transmitter, 1.3-in. (287 mm) center-to-center process isolators
306	1/2 - 14 Male NPT

Test / Vent Connections

1/4-18 Female NPT

Manifold Bolts

Standard material is plated carbon steel per ASTM A449, Type 1

Alternative bolt materials offered through Option Codes

- L4 Austenitic 316 Stainless Steel Bolts
- L5 ASTM-A-193, Grade B7M Bolts
- L8 ASTM-A-193, Class 2, Grade B8M Bolts

O-Rings

Figure 4. 304 Manifold O-Rings

Manifold-to-Flange O-Rings
Same material as specified by manifold "Packing Material" selection:

- **"1" = PTFE**
- **"2" = Graphite**

Flange Adapter O-Rings
Glass-filled PTFE

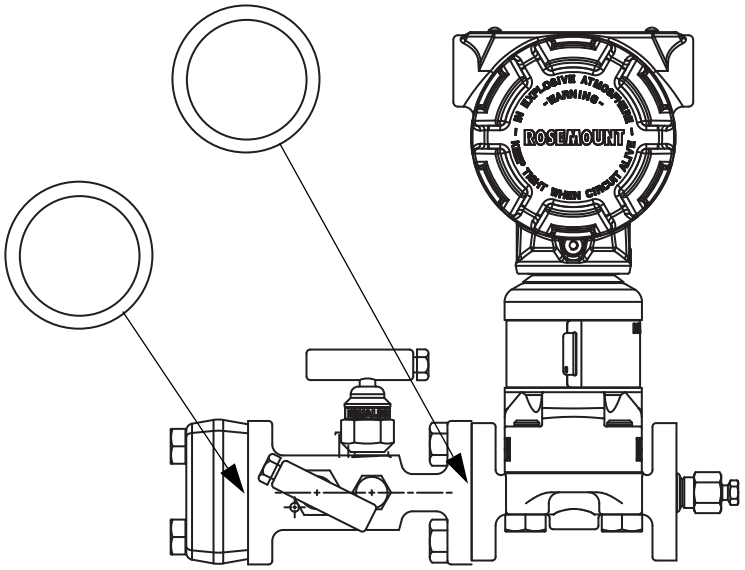

Figure 5. 305 Manifold O-Rings

Sensor Module-to-Manifold O-Rings
Specified in the transmitter model number

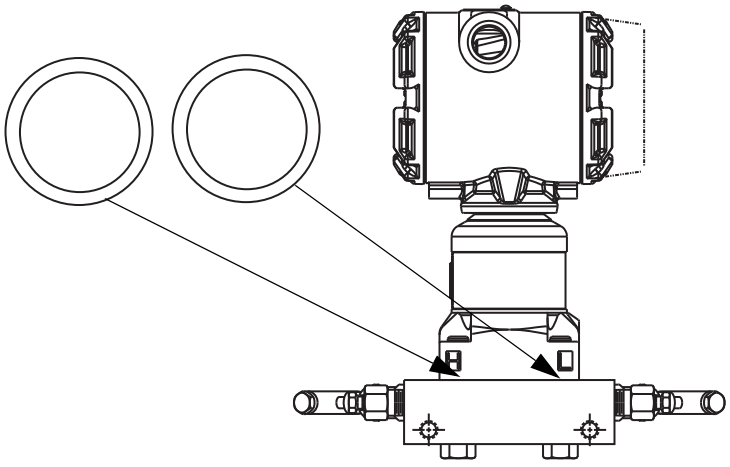

Table 10. 304 Conventional Manifolds - Process Wetted Materials of Construction

Component	SST	CS	SST with SG Option	
Body	316 SST	CS	316 SST	
Ball / Tip	316 SST /316Ti SST	316 SST	Alloy C-276	
Stem	316 SST	316 SST	Alloy C-276	
Packing	PTFE / Graphite	PTFE	PTFE / Graphite	
Bonnet	316 SST	316 SST	316 SST	
Pipe Plug	316 SST	CS	316 SST	

Table 11. 305 Integral Manifolds - Process Wetted Materials of Construction

Component	SST	Alloy C-276	316 SST with SG option	
Body	316 SST	Alloy C-276	316 SST	
Ball / Tip	316 SST /316Ti SST	Alloy C-276	Alloy C-276	
Stem	316 SST	Alloy C-276	Alloy C-276	
Packing	PTFE / Graphite	PTFE / Graphite	PTFE / Graphite	
Bonnet	316 SST	Alloy C-276	316 SST	
Pipe Plug	316 SST	Alloy C-276	316 SST	
Drain / Vent Valve	316 SST	Alloy C-276	Alloy C-276	

Table 12. 306 Inline Manifolds - Process Wetted Materials of Construction

Component	SST	Alloy C-276	316 SST with SG option	
Body	316 SST	Alloy C-276	316 SST	
Ball / Tip	316 SST /316Ti SST	Alloy C-276	Alloy C-276	
Stem	316 SST	Alloy C-276	Alloy C-276	
Packing	PTFE / Graphite	PTFE / Graphite	PTFE / Graphite	
Bonnet	316 SST	Alloy C-276	316 SST	
Pipe Plug	316 SST	Alloy C-276	316 SST	
Bleed Screw	316 SST / 316Ti SST	Alloy C-276	Alloy C-276	

Materials of Construction - Typical

Figure 6. Typical Rosemount Manifold Valve

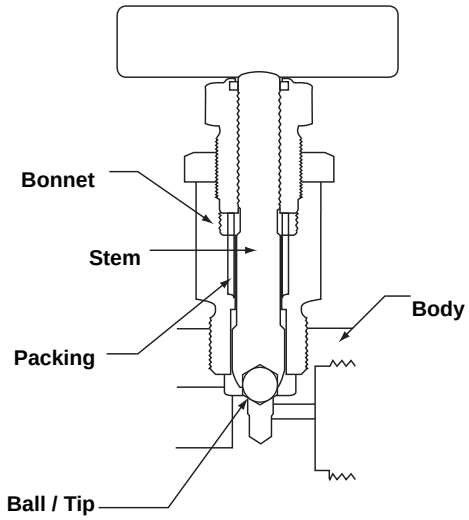

Estimated Weight

Model and Description	Weight
304	
2-valve traditional flange x NPT	5.0 lbs (2.3 kg)
2-valve traditional flange-x flange	5.5 lbs (2.5 kg)
3-valve traditional flange x NPT	5.2 lbs (2.4 kg)
3-valve traditional flange x flange	5.7 lbs (2.6 kg)
3-valve wafer flange x NPT	4.0 lbs (1.8 kg)
5-valve wafer flange x NPT	5.7 lbs (2.6 kg)
5-valve traditional flange x NPT	5.7 lbs (2.6 kg)
5-valve traditional flange x flange	5.7 lbs (2.6 kg)
305	
2-valve Coplanar	4.5 lbs (2.0 kg)
2-valve traditional	6.0 lbs (2.7 kg)
3-valve Coplanar	4.7 lbs (2.1 kg)
3-valve traditional	6.0 lbs (2.7 kg)
5-valve Coplanar	6.5 lbs (3.0 kg)
306	
Block-and-Bleed	1.1 lbs (0.5 kg)
2-valve	2.5 lbs (1.1 kg)

Dimensional Drawings

Rosemount 304 Two-Valve Flange X NPT Conventional Manifold

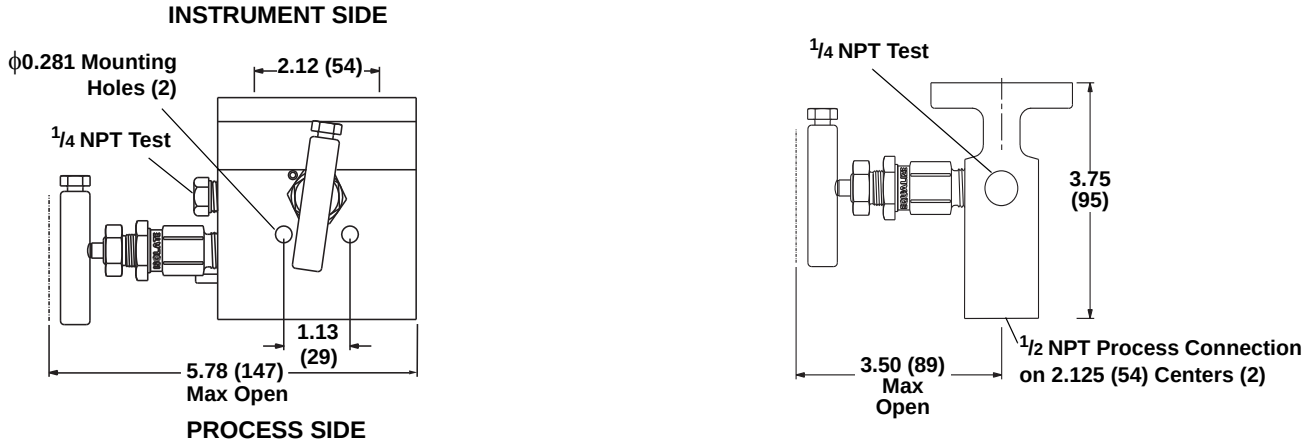

Dimensions are in inches (millimeters)

Rosemount 304 Two-Valve Flange X Flange Conventional Manifold

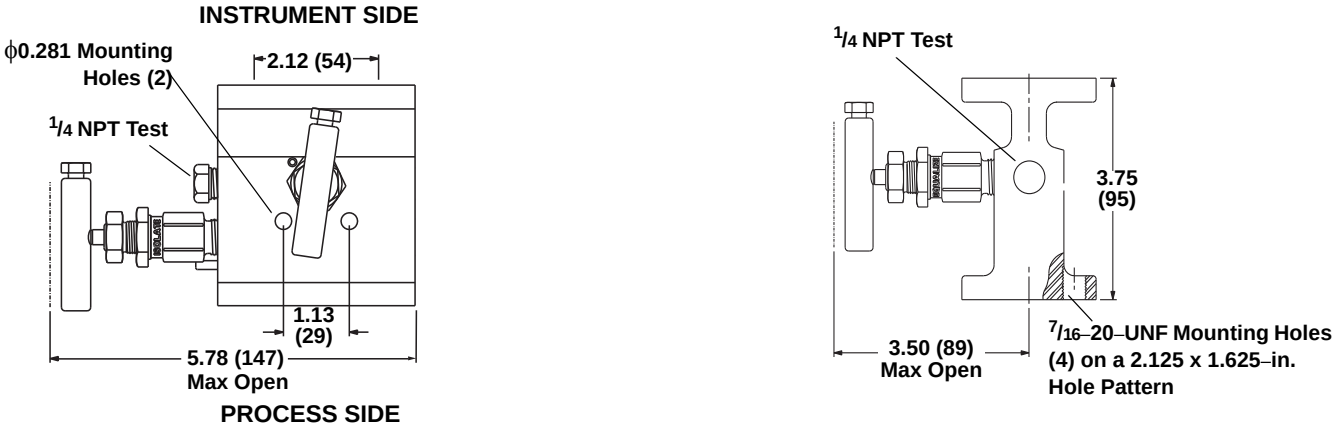

Dimensions are in inches (millimeters)

Rosemount 304 Three-Valve Flange X NPT Conventional Manifold

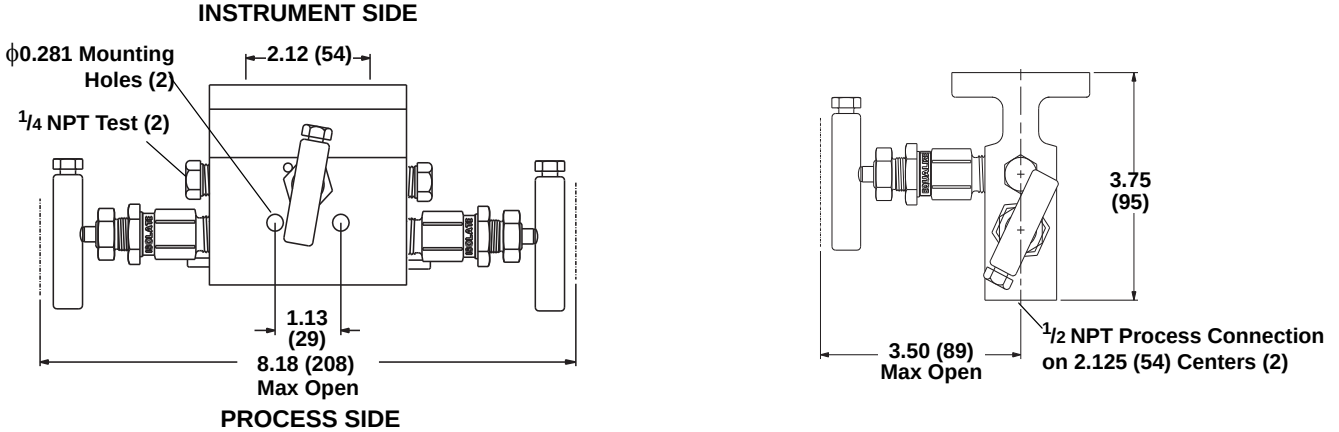

Dimensions are in inches (millimeters)

Rosemount 304 Three-Valve Flange X Flange Conventional Manifold

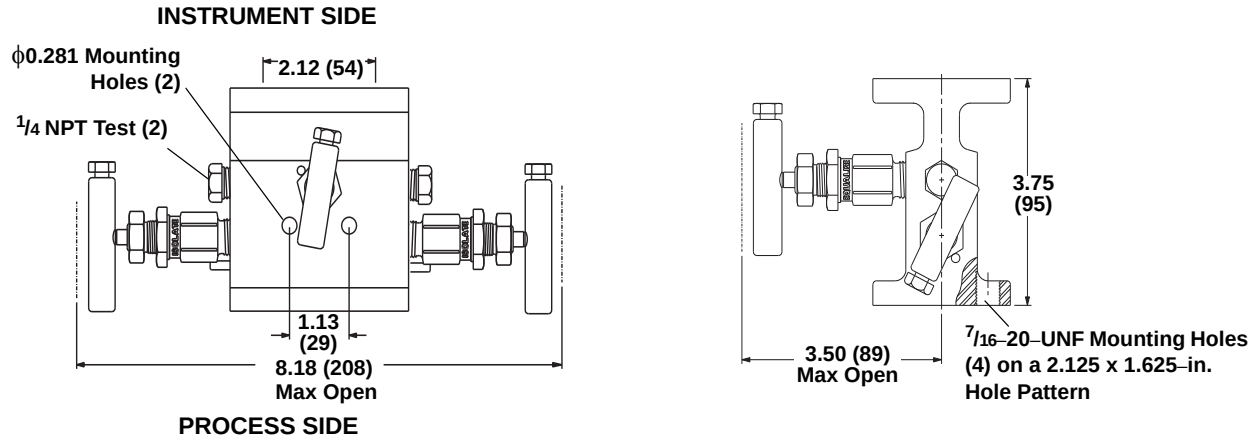

Dimensions are in inches (millimeters)

Rosemount 304 Natural Gas Five-Valve Flange X NPT Conventional Manifold

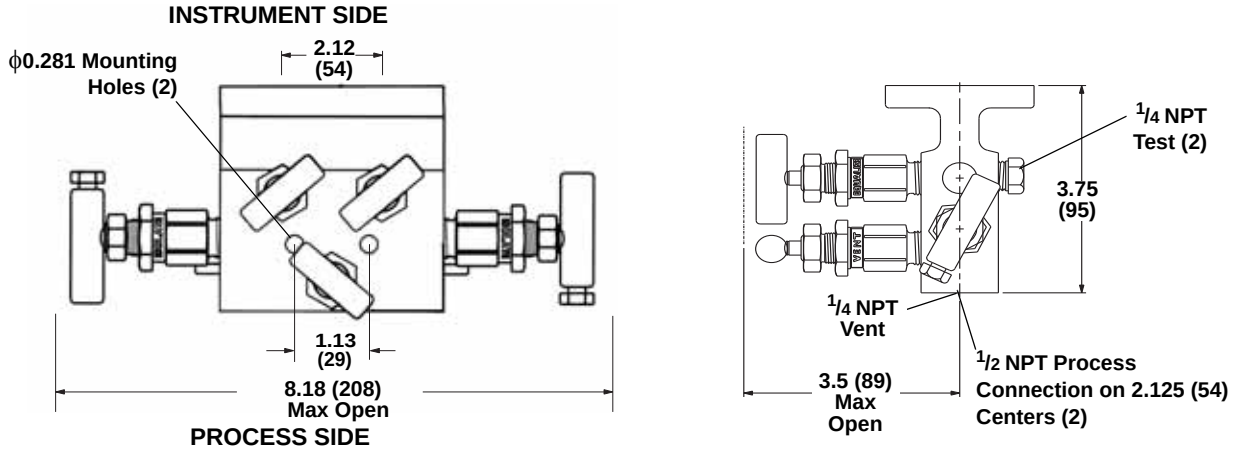

Dimensions are in inches (millimeters)

Rosemount 304 Natural Gas Five-Valve Flange X Flange Conventional Manifold

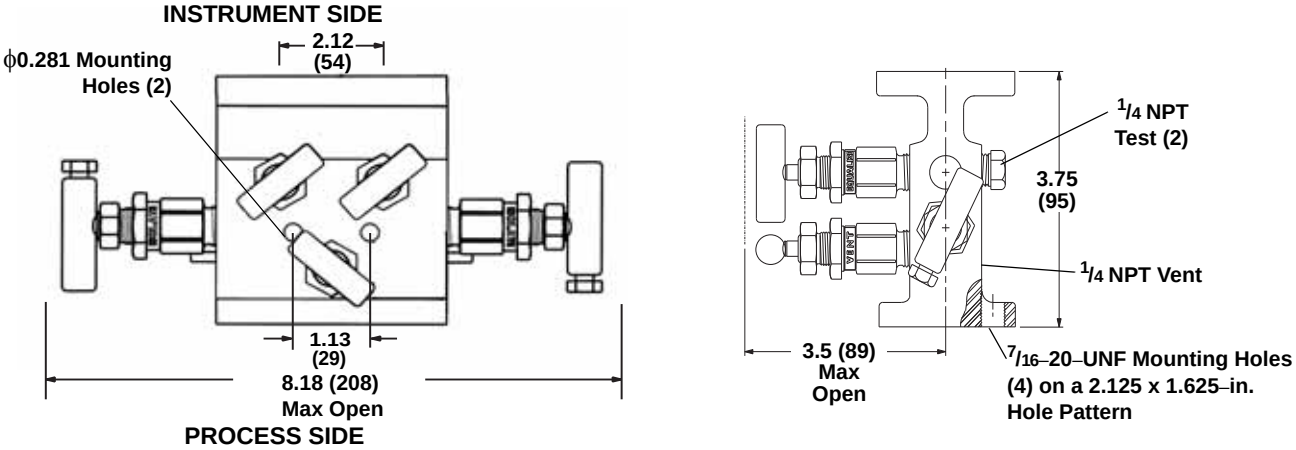

Dimensions are in inches (millimeters)

Rosemount 304 Three-Valve Wafer Manifold

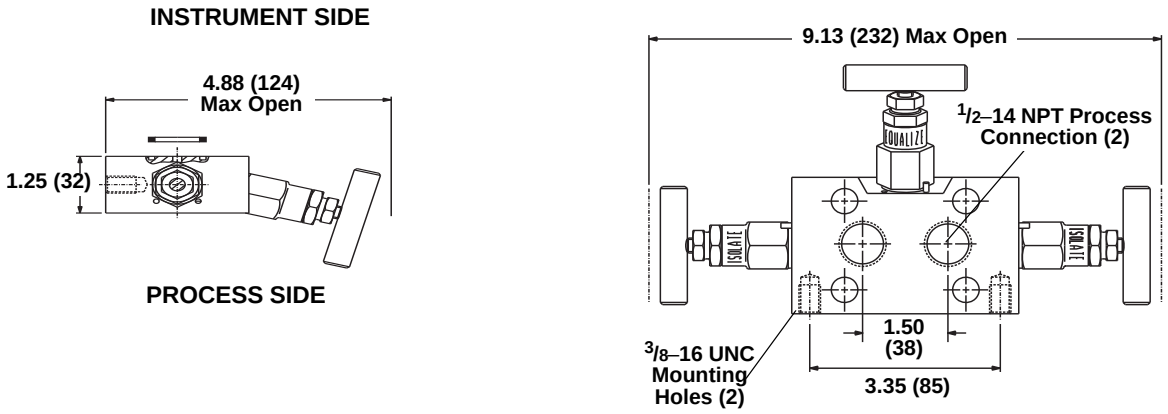

Dimensions are in inches (millimeters)

Rosemount 304 Five-Valve Wafer Manifold

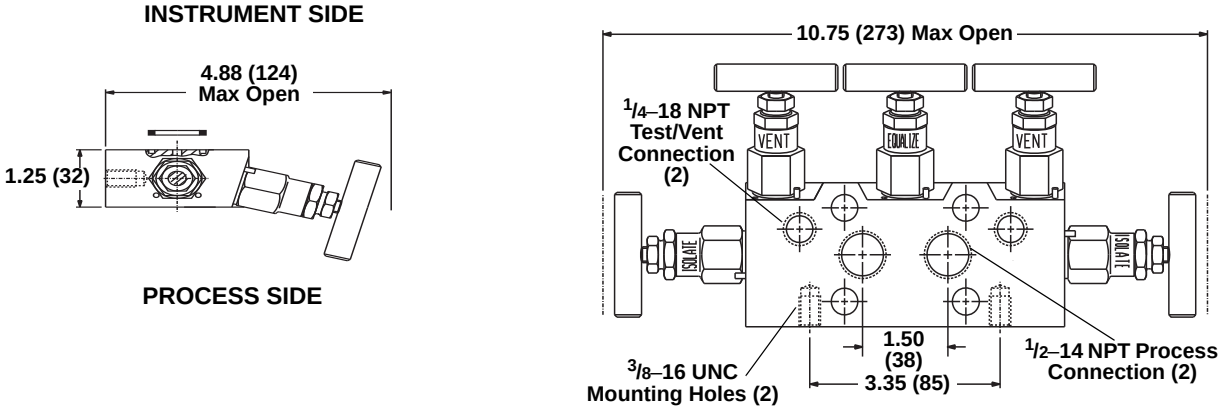

Dimensions are in inches (millimeters)

Rosemount 305R Two-Valve Coplanar Style Manifold

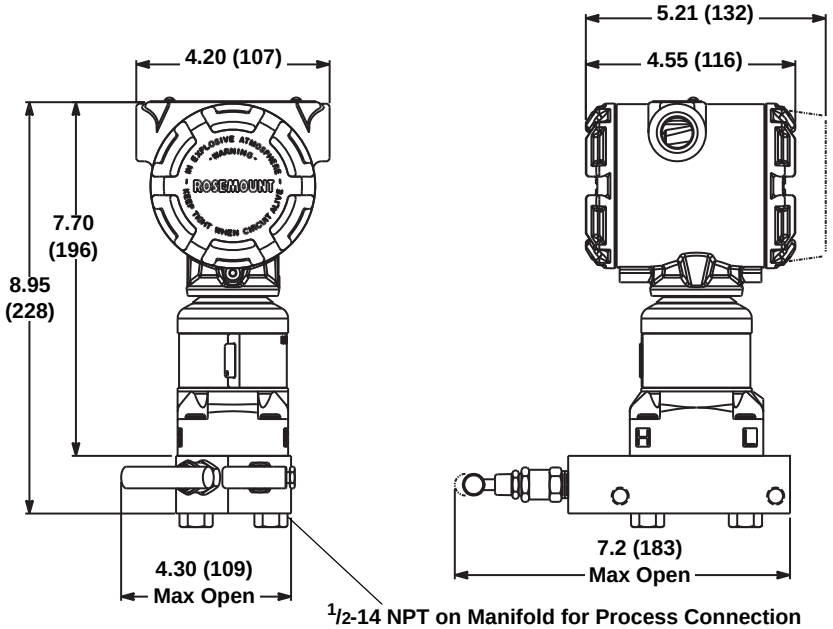

Dimensions are in inches (millimeters)

Rosemount 305R Three-Valve Coplanar Style Manifolds

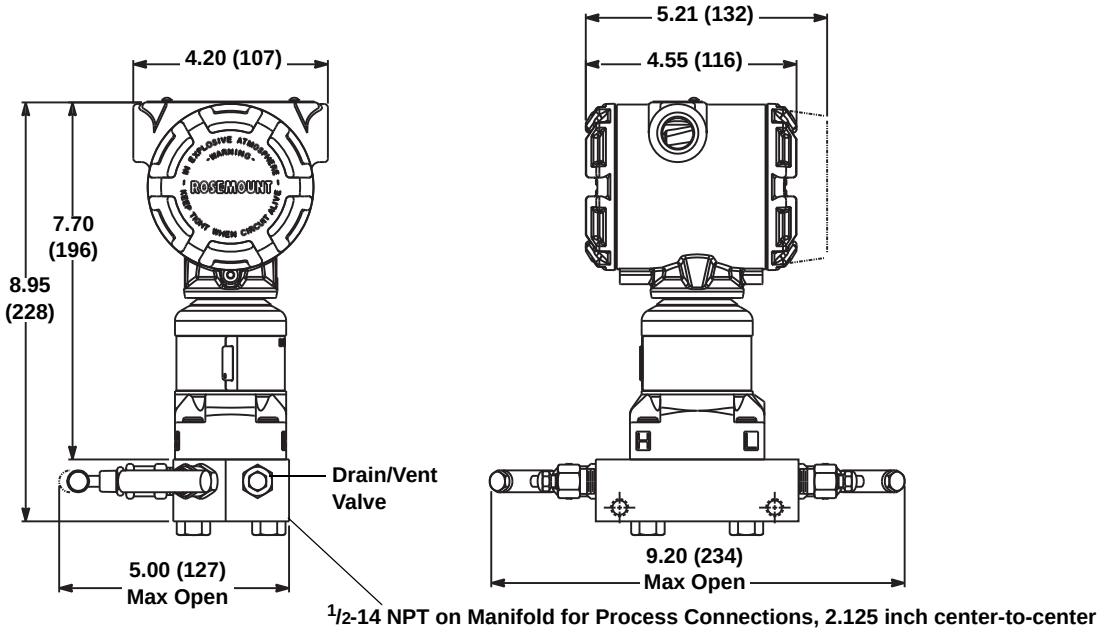

Dimensions are in inches (millimeters)

Rosemount 305R Five-Valve Coplanar Style Manifold

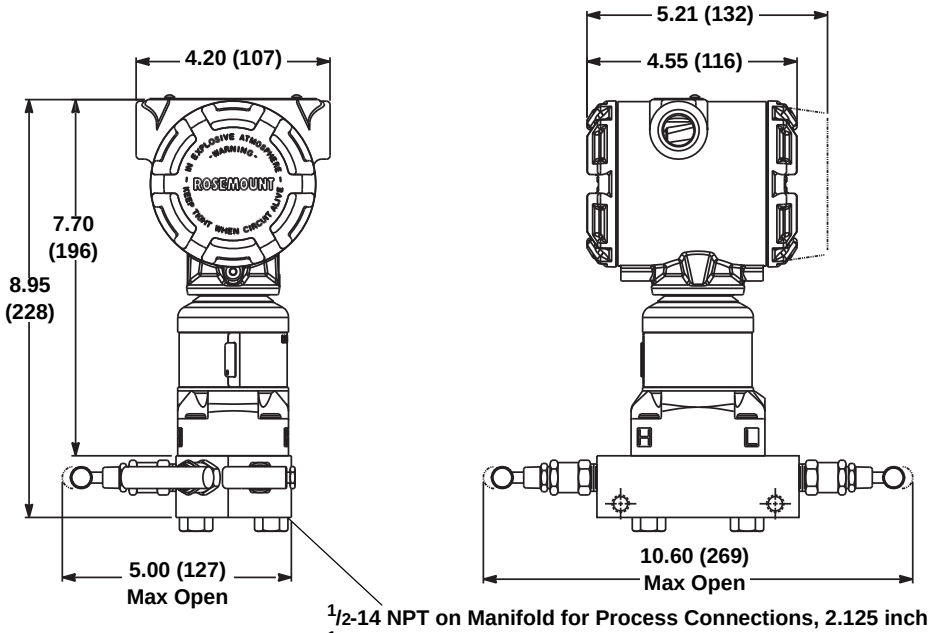

Dimensions are in inches (millimeters)

Rosemount 305RT Two-Valve Traditional Style Manifold

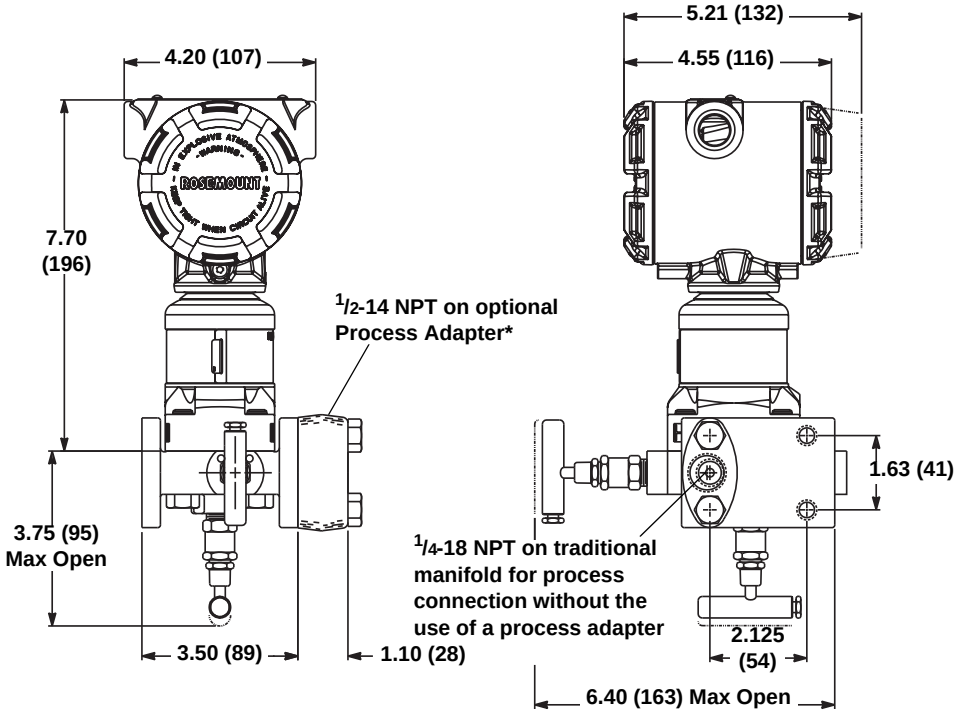

Dimensions are in inches (millimeters)

Rosemount 305RT Three-Valve Traditional Style Manifold

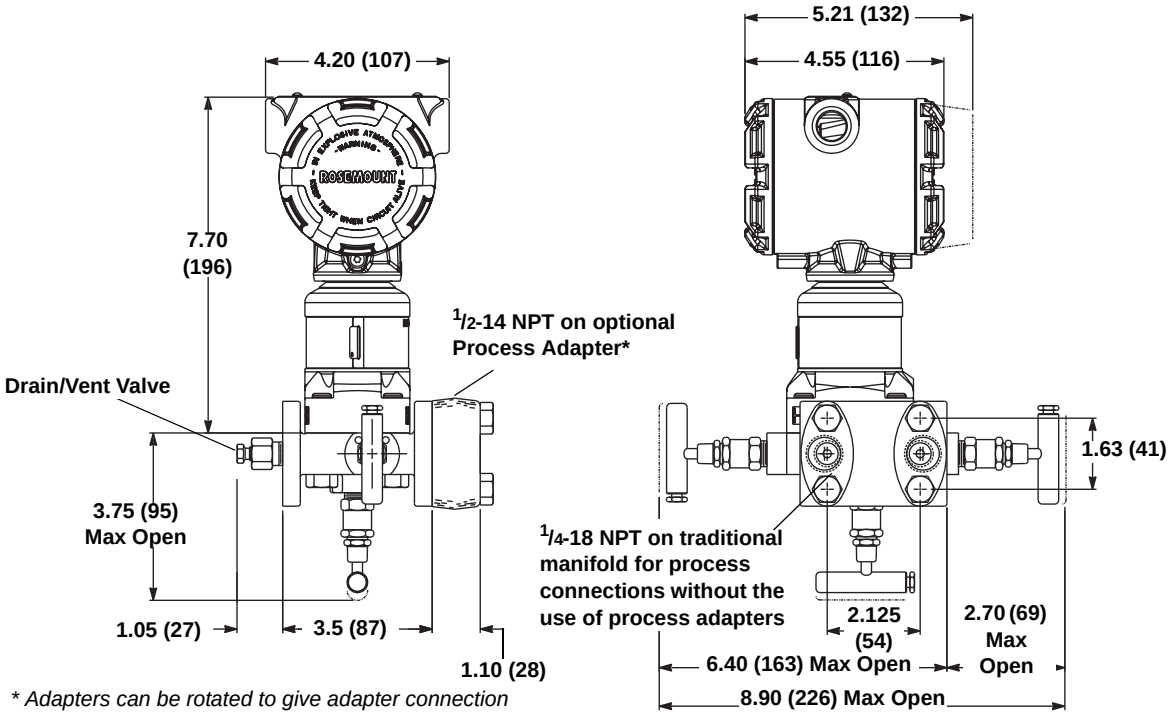

** Adapters can be rotated to give adapter connection centers of 2.0 (51), 2.125 (54), or 2.25 (57).*

Dimensions are in inches (millimeters)

Rosemount 305RM Two-Valve Traditional Style Manifold

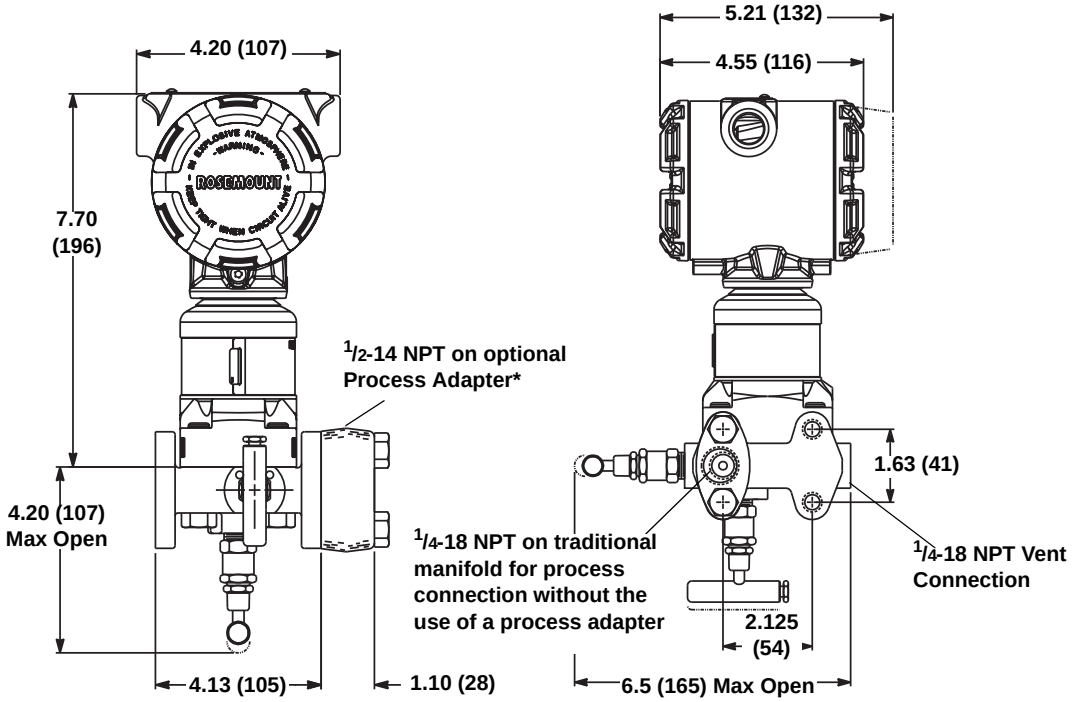

Dimensions are in inches (millimeters)

Rosemount 305RM Three-Valve Traditional Style Manifold

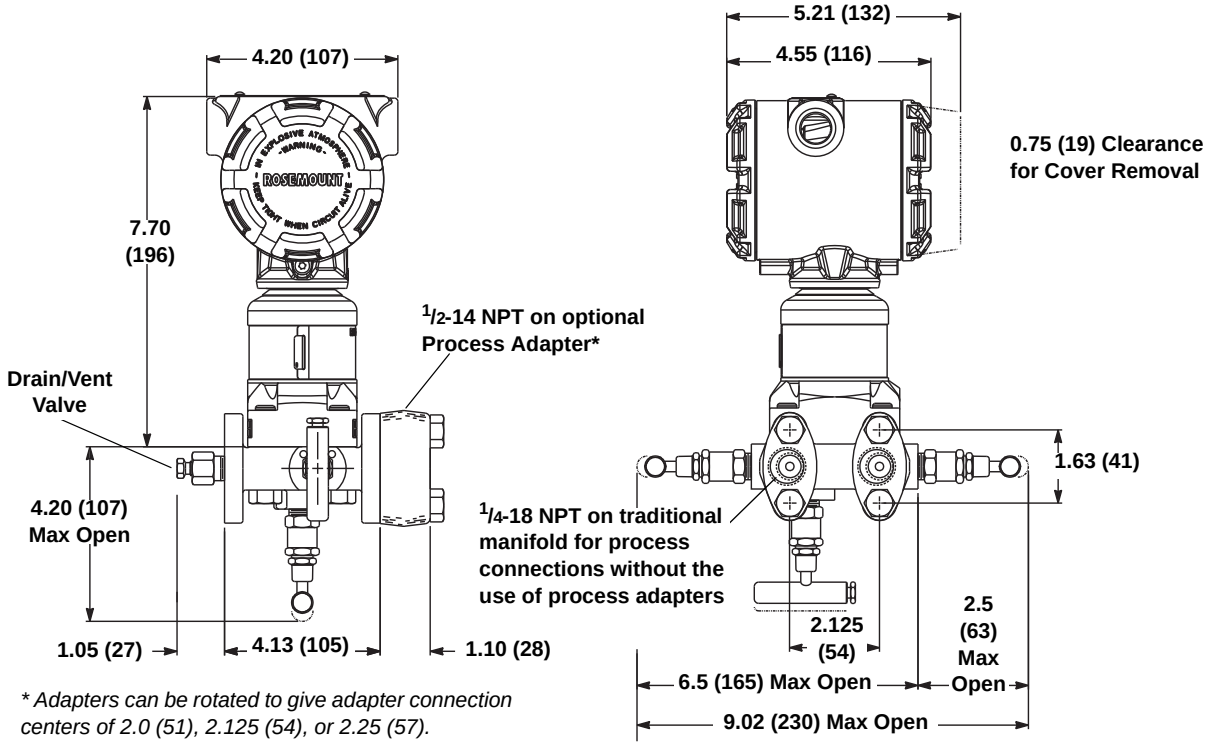

** Adapters can be rotated to give adapter connection centers of 2.0 (51), 2.125 (54), or 2.25 (57).*

Dimensions are in inches (millimeters)

Rosemount 305RM Five-Valve Traditional Style Manifold

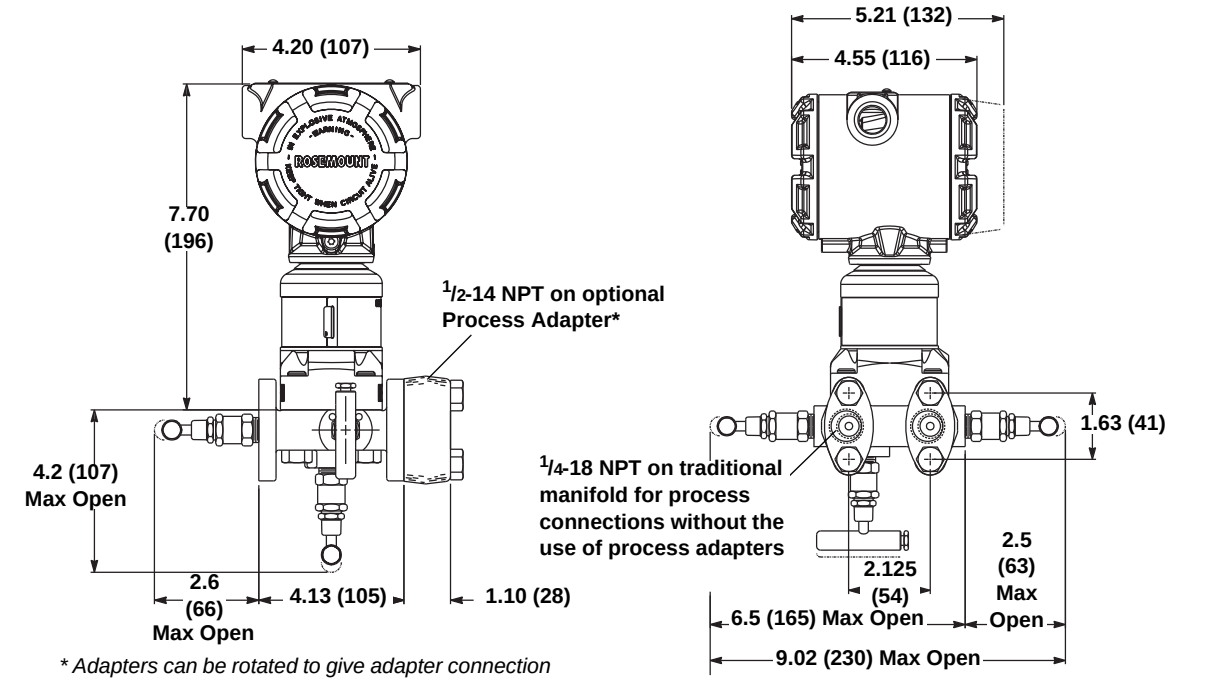

** Adapters can be rotated to give adapter connection centers of 2.0 (51), 2.125 (54), or 2.25 (57).*

Dimensions are in inches (millimeters)

Rosemount 306R Pressure Style Manifold (3051S_T Shown)

BLOCK AND BLEED STYLE

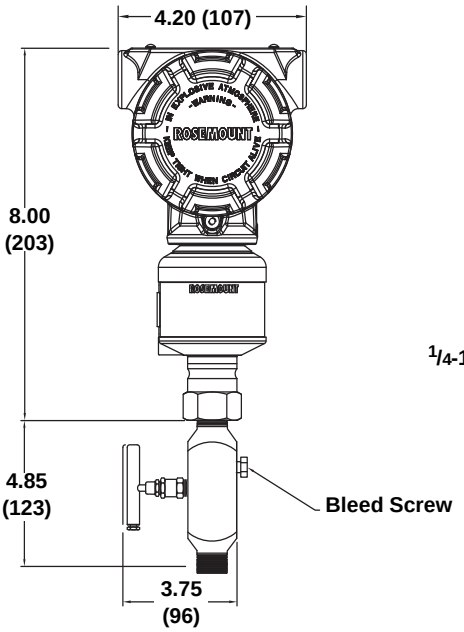

TWO-VALVE STYLE

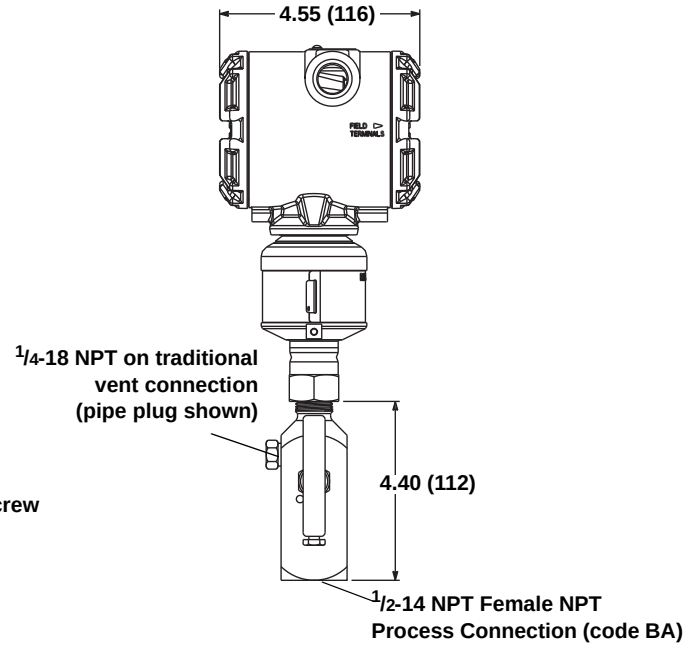

Manifold valve orientation may vary with respect to transmitter mounting holes.

Dimensions are in inches (millimeters)

Installations for Rosemount 3051T and 3051S_T Transmitters for Panel Mounting

ROSEMOUNT 3051T

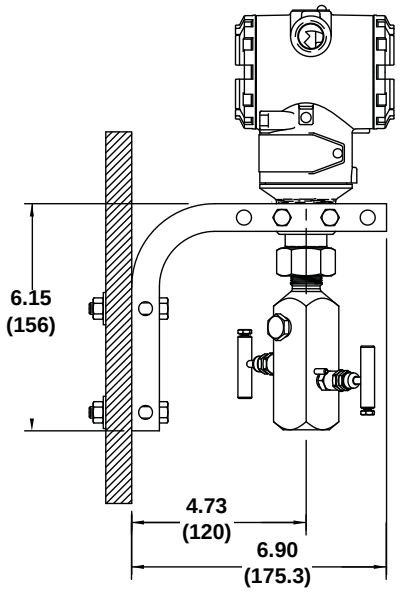

ROSEMOUNT 3051S_T

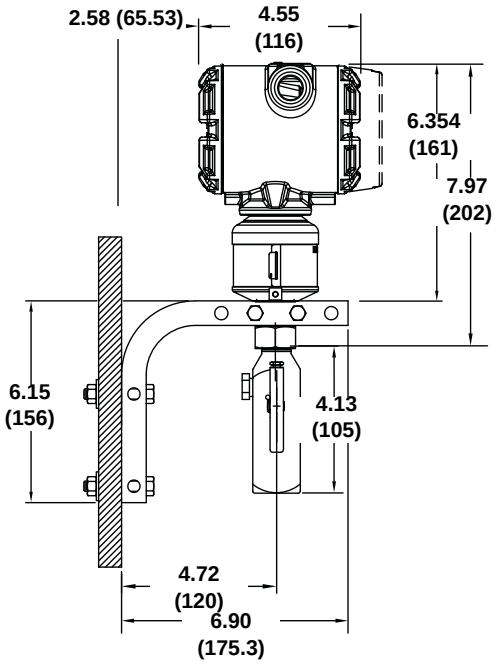

Manifold valve orientation may vary with respect to transmitter mounting holes.

Dimensions are in inches (millimeters)

Installations for Rosemount 3051T and 3051S_T Transmitters for 2-in. Pipe Mounting

ROSEMOUNT 3051T

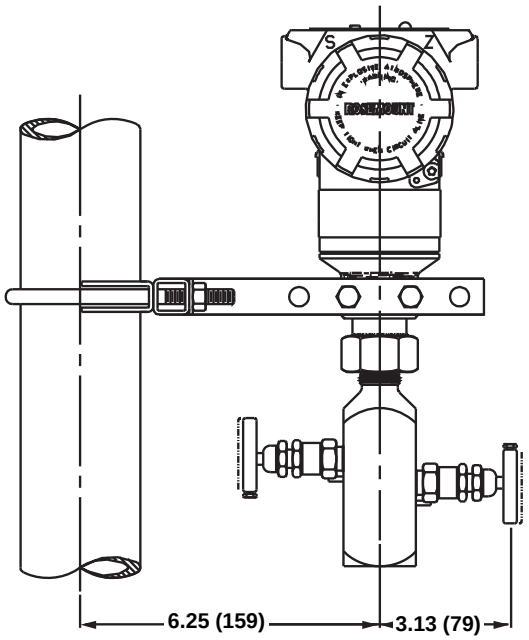

ROSEMOUNT 3051S_T

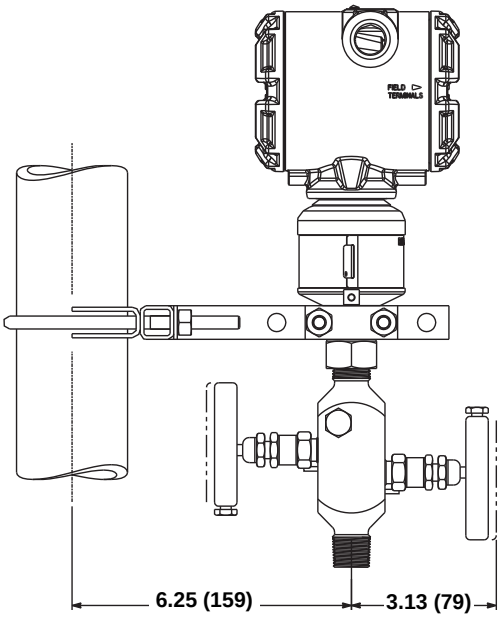

Manifold valve orientation may vary with respect to transmitter mounting holes.

Dimensions are in inches (millimeters)

Coplanar Manifold with Optional Bracket for 2-in. Pipe Mounting

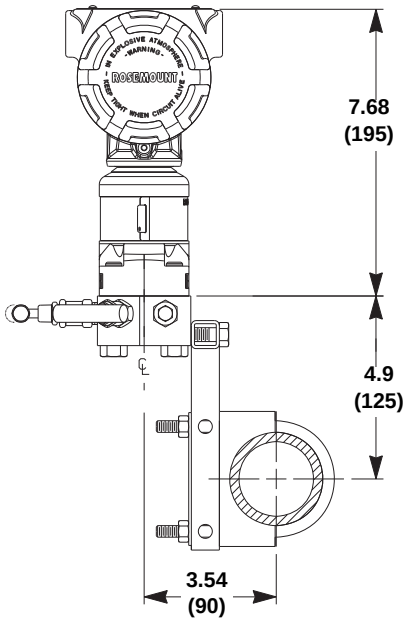

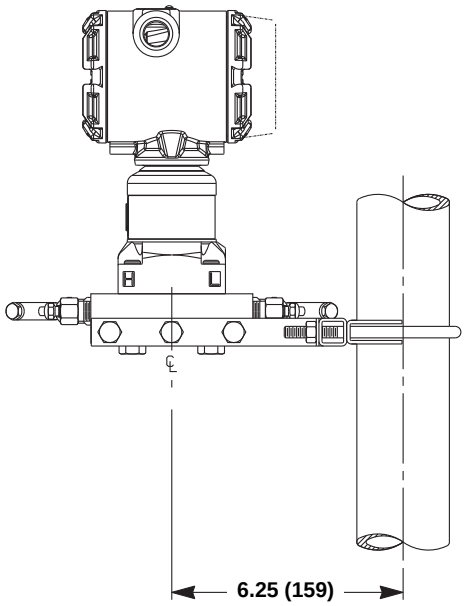

OPTION CODE B4

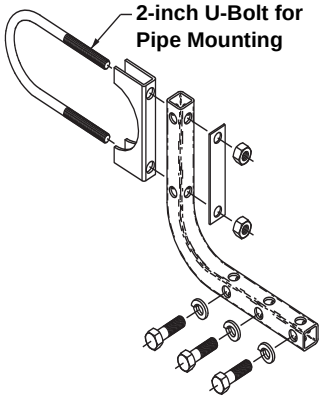

Dimensions are in inches (millimeters)

Traditional Manifold with Optional Brackets for 2-in. Pipe Mounting

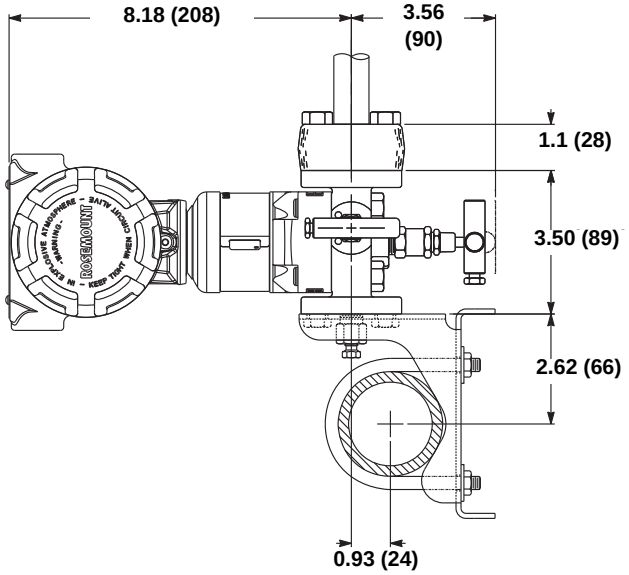

B3/B9/BC MOUNTING BRACKET

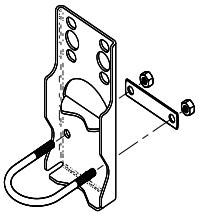

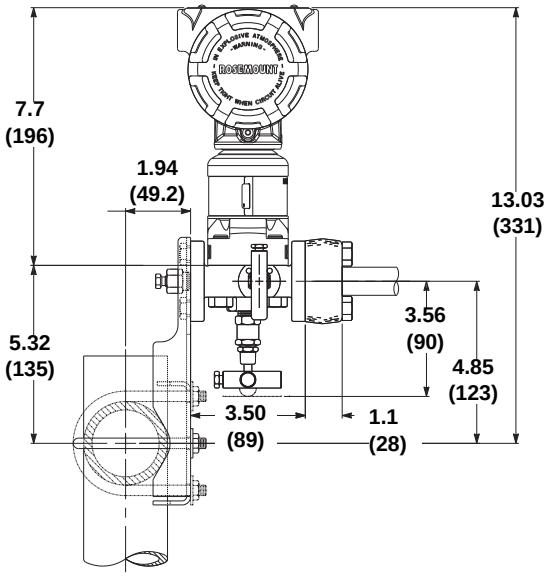

B1/B7/BA MOUNTING BRACKET

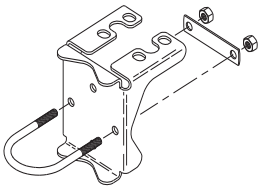

Dimensions are in inches (millimeters)

VS/VC Heavy Duty Manifold Mounting Bracket

2-IN. PIPE MOUNT

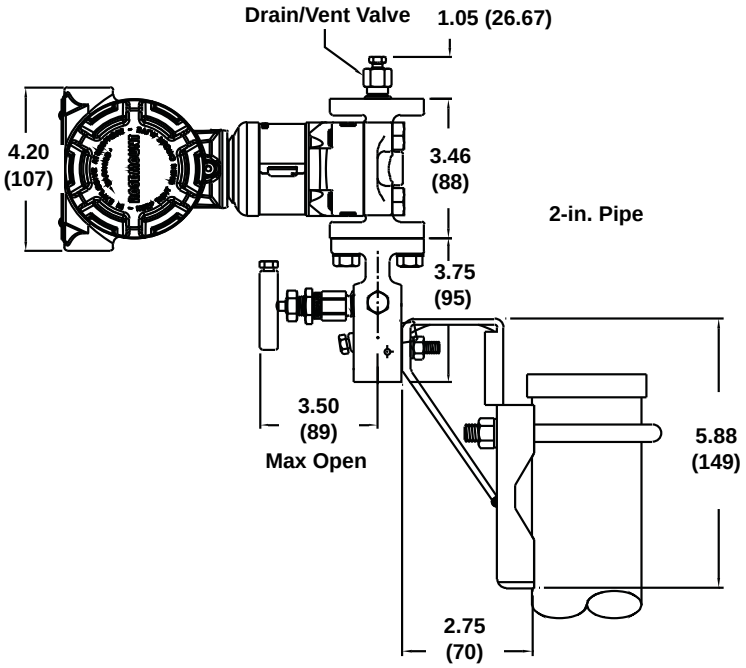

PANEL MOUNT

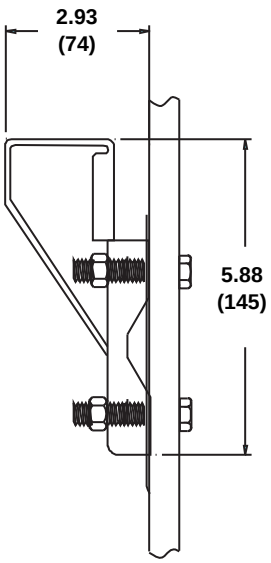

Dimensions are in inches (millimeters)

OPTIONS

Module Guard

A sensor module guard is available to protect the transmitter process isolating diaphragms. This guard should be used whenever the transmitter is removed from the integral manifold to avoid damage to the isolating diaphragms.

- Part number: 00305-1000-0001 (5/pack)

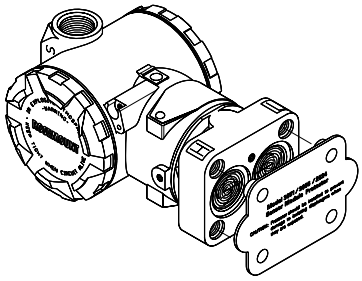

P2 Cleaning for Special Services

Per ASTM G93-96, this option minimizes process contaminants by cleaning wetted surfaces with a suitable detergent.

SG Sour Gas

Materials of Construction comply with recommendations per NACE MR 0175/ISO 15156 for sour oil field production environments. Environmental limits apply to certain materials. Consult latest standard for details. Selected materials also conform to NACE MR0103 for sour refining environments.

Heat Block Kits

Rosemount 304 Manifolds are available with steam heat block kits for cold environments and services. The steam block attaches directly to the manifold to prevent the process from freezing.

ASME B31.1 Power Piping Code

Rosemount Manifolds are available in configurations that meet the requirements of the ASME B31.1 Power Piping Code. This code specifies design criteria for most air, gas, steam, water, and oil systems used in electric generating systems, central and district heating systems, industrial power plants, and geothermal plants. ASME B31.1 includes requirements for manifolds, valves, and piping. Transmitters and other measuring devices do not fall within the scope of this code.

Marking

Manifolds are tagged with a part number, schematic drawing, temperature, and pressure limits.

Other Publications

For additional information, go to www.rosemount.com.

SPARE PARTS LIST

Table 13. Rosemount 304 Conventional Manifold

Part Description	Part Number (Traditional Style)	Part Number (Wafer Style)
Mounting Brackets (qty. 1)		
Manifold Heavy Duty Mounting Bracket, CS	01166-8005-0002	NA
Manifold Heavy Duty Mounting Bracket, SST	01166-8005-0001	NA
Manifold SST Mounting Bracket for 2-in. Pipe Mount	NA	00305-0405-0001
O-Rings (set of 12)		
Manifold-to-Flange O-Ring, Glass-filled PTFE	03031-0019-0003	03031-0019-0003
Manifold-to-Flange O-Ring, Graphite-filled PTFE	03031-1302-0002	03031-1302-0002
Manifold-to-Flange Bolt Kits (set of 4)		
Consult factory for part numbers	Consult Factory	Consult Factory
Heater Block Kits (qty. 1)		
Steam Block Kit	00305-0406-0001	NA

Table 14. Rosemount 305 Integral Manifold

Part Description	Part Number (Traditional Style)	Part Number (Coplanar Style)
Mounting Brackets (qty. 1)		
Manifold SST Mounting Bracket for 2-in Pipe Mount	NA	00305-0405-0001
Bolt Kits (set of 4)		
CS Bolt Kit	03031-0312-0001	03031-0311-0001
SST Bolt Kit	03031-0312-0002	03031-0311-0002
ANSI/ASTM-A-193-B7M Bolt Kit	03031-0312-0003	03031-0311-0003
Drain/Vents (qty. 1)		
316 SST Drain/Vent for use with 3-valve 305 Manifold	01151-0028-0012	01151-0028-0012
Alloy C-276 Drain/Vent for use with 3-valve 305 Manifold	01151-0028-0013	01151-0028-0013
Coplanar Flange Kits (qty. 1)		
Differential Flange Kit, SST	NA	00305-1001-0001
Gauge Flange Kit, SST	NA	00305-1001-1001
O-Rings (set of 12)		
Manifold-to-Module O-Ring, Glass-filled PTFE	03031-0234-0001	03031-0234-0001
Manifold-to-Module O-Ring, Graphite-filled PTFE	03031-0234-0002	03031-0234-0002
Sensor Guard (set of 5)		
Coplanar Module Sensor Guard	00305-1000-0001	00305-1000-0001

Rosemount Manifolds

Product Data Sheet
00813-0100-4733, Rev NB
January 2011

Standard Terms and Conditions of Sale can be found at www.rosemount.com\terms_of_sale
The Emerson logo is a trade mark and service mark of Emerson Electric Co.
Rosemount and the Rosemount logotype are registered trademarks of Rosemount Inc.
Coplanar is a trademark of Rosemount Inc.
© 2010 Rosemount, Inc. All rights reserved.

Emerson Process Management
Rosemount Measurement
8200 Market Boulevard
Chanhassen MN 55317 USA
Tel (USA) 1 800 999 9307
Tel (International) +1 952 906 8888
Fax +1 952 949 7001

Emerson Process Management
Blegistrasse 23
P.O. Box 1046
CH 6341 Baar
Switzerland
Tel +41 (0) 41 768 6111
Fax +41 (0) 41 768 6300

Emerson FZE
P.O. Box 17033
Jebel Ali Free Zone
Dubai UAE
Tel +971 4 811 8100
Fax +971 4 886 5465

Emerson Process Management Asia Pacific Pte Ltd
1 Pandan Crescent
Singapore 128461
Tel +65 6777 8211
Fax +65 6777 0947
Service Support Hotline : +65 6770 8711
Email : Enquiries@AP.EmersonProcess.com

00813-0100-4733 Rev NB, 1/11

EMERSON™
Process Management

Industrial Gauges

Type 23X.54

- **Stainless Steel Case & Bayonet Ring**
- **Field Liquid-Fillable**
- **Welded Case-to-Socket Connection**

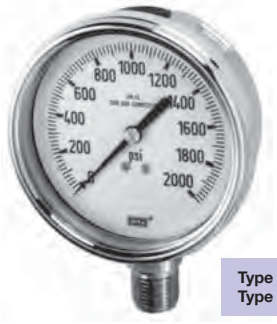

Liquid Fillable

Type 232.54 - Dry case
Type 233.54 - Liquid filled case

Type 23X.54 gauges feature 316 stainless steel wetted parts and 304 stainless steel case and bayonet ring, a laminated safety glass window, and can be liquid-filled in the field. These gauges are ideal for process, chemical applications, oil exploration and production, power generation, and pollution control equipment.

Standard Features

- **Nominal Case Size:** 2½" (68 mm), 4" (100 mm)
- **Case Material:** 304 stainless steel
- **Wetted Parts:** 316 SS
- **Window Type & Material:** Laminated safety glass
- **Removable Window:** Yes
- **Dial Material:** White aluminum
- **Bezel Ring Type & Material:** Twist-on bayonet ring
- **Liquid Fillable Gauge:** Yes
- **Case-to-Socket O-ring Material:** Welded
- **"Other" Gaskets/O-ring Types & Materials:** Window gasket, BUNA-N
- **Pointer Material/Type:** Black aluminum- adjustable
- **Adjustable Pointer:** Yes, under window
- **Accuracy:** (2½") ±1.5% of span; (4") ± 1.0% of span-ASME B40.100 Grade 1A
- **Connection Locations:** LM (Lower Mount), CBM (Center Back Mount) & LBM (Lower Back Mount)
- **Media Operating Temperature:** Max. 212°F
- **Ambient Operating Temperature:** -40°F to 140°F dry; -4°F to 10°F glycerine case fill; -40°F to 140°F- silicone case fill

Type	232.54					
Connection	LM			CBM		
Conn. Size	1/4" NPT					
Size	2½"					
Press. Scale[1]	PSI	PSI/BAR	PSI/KG/CM²	PSI	PSI/BAR	PSI/KG/CM²
30" Hg	9744827	9735245	9694531	9745068	9735385	9694778
30"-0-15 PSI	9744835		9694549	9745076		
30"-0-30 PSI	9744843		9694557	9745084		
30"-0-60 PSI	9744851		9694565	9745092		
30"-0-100 PSI	9744860		9694574	9745106		
30"-0-160 PSI	9744878		9694582	9745114		
30"-0-200 PSI	9744886		9694590	9745122		
15 PSI	9744894	9735114	9694604	9745130	9735254	9694786
30 PSI	9744908	9735122	9694612	9745149	9735262	9694795
60 PSI	9744916	9735130	9694620	9745157	9735270	9694808
100 PSI	9744924	9735148	9694638	9745165	9735288	9694816
160 PSI	9744932	9735156	9694646	9745173	9735296	9694825
200 PSI	9744940		9694655	9745181		9694833
300 PSI	9744959	9735165	9694663	9745190	9735300	9694841
400 PSI	9744967		9694671	9745203		9694859
600 PSI	9744975	9735173	9694689	9745211	9735318	9694867
800 PSI	9744983		9694697	9745220		
1,000 PSI	9744991	9735181	9694701	9745238	9735326	9694875
1,500 PSI	9745009	9735199	9694719	9745246	9735335	9694884
2,000 PSI	9745017		9694727	9745254		9694892
3,000 PSI	9745025	9735203	9694735	9745262	9735343	9694905
5,000 PSI	9745033	9735211	9694744	9745270	9735351	9694914
10,000 PSI	9745041	9735229	9694752	9745289	9735369	9694922
15,000 PSI	9745050	9735237	9694760	9745297	9735377	

[1]"PSI/BAR" denotes dual scale; PSI outside in black, BAR inside in red. "PSI/KG/CM²" denotes dual scale; PSI outside in black, KG/CM² inside in red. Note: Vacuum scale: 30" Hg outside in black; 760 mm Hg inside in red.
[2]Applies to any quantity when added to standard stock gauges.

Available Options

"Dampened Movement" Option: Yes (N/A on 2½" CBM)
U-Clamp Bracket: Yes (CBM & LBM only)
Front Flange: Yes (CBM & LBM only)
Rear Flange: Yes (CBM, LBM & LM)
Restrictor: Yes
Safety Glass Window: Standard
Instrument Glass Window (flat glass): Yes, and acrylic
Drag Pointer (maximum reading indicator): Yes
Cleaned for Use in Oxygen Service: Yes
Panel Mount Kit: Yes (see front flange & u-clamp options)
Magnetic or Inductive Contact Switches: No
Receiver Gauge Scales: Yes
Special Connection: Limited to wrench flat area

Note: For options not shown - consult your WIKA Distributor or the Factory.

Note: For liquid filled gauges, add "-829" to part numbers above for 2½" size or "-834" for 4" size. Welded connection (case/socket) standard on 2½" sizes & 4" sizes

Data sheet: 23X.54

Items shown with part numbers indicate readily available standard WIKA products. Items shown without part numbers are available on special order.

Type	232.54						
Connection	LM				LBM		
Conn. Size	1/4" NPT	1/2" NPT			1/2" NPT		
Size	4"	4"			4"		
Press. Scale[1]	PSI	PSI	PSI/BAR	PSI/KG/CM²	PSI	PSI/BAR	PSI/KG/CM²
30" Hg	9745300	9745548	9734826	9694930	9745785	9734966	
30"-0-15 PSI	9745319	9745556		9694948	9745793		
30"-0-30 PSI	9745327	9745564		9694956	9745807		
30"-0-60 PSI	9745335	9745572		9694965	9745815		
30"-0-100 PSI	9745343	9745580		9694973	9745823		
30"-0-160 PSI	9745351	9745599			9745831		
30"-0-200 PSI	9745360	9745602			9745840		
15 PSI	9745378	9745610	9734699	9694981	9745858	9734835	
30 PSI	9745386	9745629	9734703	9694999	9745866	9734843	9695155
60 PSI	9745394	9745637	9734711	9695006	9745874	9734851	9695163
100 PSI	9745408	9745645	9734729	9695015	9745882	9734869	9695171
160 PSI	9745416	9745653	9734737	9695023	9745890	9734877	9695189
200 PSI	9745424	9745661		9695031	9745904		9695197
300 PSI	9745432	9745670	9734745	9695049	9745912	9734885	9695201
400 PSI	9745440	9745688		9695057	9745920		
600 PSI	9745459	9745696	9734754	9695065	9745939	9734894	9695219
800 PSI	9745467	9745700		9695074	9745947		
1,000 PSI	9745475	9745718	9734762	9695082	9745955	9734907	
1,500 PSI	9745483	9745726	9734770	9695090	9745963	9734915	9695227
2,000 PSI	9745491	9745734		9695104	9745971		9695235
3,000 PSI	9745505	9745742	9734788	9695112	9745980	9734924	9695244
5,000 PSI	9745513	9745750	9734796	9695120	9745998	9734932	9695252
10,000 PSI	9745521	9745769	9734800	9695138	9746005	9734940	
15,000 PSI	9745530	9745777	9734818	9695146	9746013	9734958	9695260

[1]"PSI/BAR" denotes dual scale; PSI outside in black, BAR inside in red. "PSI/KG/CM²" denotes dual scale; PSI outside in black, KG/CM² inside in red. Note: Vacuum scale: 30" Hg outside in black; 760 mm Hg inside in red.

Type	232.54 - Stock Gauges with X-mas Tree Dial Scales
Connection	LM
Conn. Size	1/2" NPT
Size	4"
Press. Scale	PSI
1,000 PSI	8992350
1,500 PSI	8992342
2,000 PSI	8992334
3,000 PSI	8992325
5,000 PSI	8992317
10,000 PSI	8992309

Type	232.54- Receiver Scales			
Size	2½"		4"	
Connection	LM	CBM	LM	LBM
Conn. Size	1/4" NPT		1/2" NPT	
100%	9749470	9749497	9749500	9749519
10 sq. rt.	9749462	9749489		

Type	233.54	
Connection	LM	CBM
Conn. Size	1/4" NPT	1/4" NPT
Size	2½"	2½"
Press. Scale	PSI	PSI
30" Hg	9831784	9832020
30"-0-15 PSI	9831792	9832046
30"-0-30 PSI	9831805	9832055
30"-0-60 PSI	9831814	9832063
30"-0-100 PSI	9831822	9832071
30"-0-160 PSI	9831830	9832089
30"-0-200 PSI	9831848	9832097
15 PSI	9831856	9832101
30 PSI	9831865	9832119
60 PSI	9831873	9832127
100 PSI	9831881	9832135
160 PSI	9831899	9832144
200 PSI	9831903	9832152
300 PSI	9831911	9832160
400 PSI	9831929	9832178
600 PSI	9831937	9832186
800 PSI	9831945	9832195
1,000 PSI	9831954	9832208
1,500 PSI	9831962	9832216
2,000 PSI	9831970	9832225
3,000 PSI	9831988	9832233
5,000 PSI	9831996	9832241
10,000 PSI	9832004	9832259
15,000 PSI	9832012	9832267

Type	233.54		
Connection	LM		LBM
Conn. Size	1/4" NPT	1/2" NPT	1/2" NPT
Size	4"	4"	4"
Press. Scale	PSI	PSI	PSI
30" Hg	9832275	9832518	9832755
30"-0-15 PSI	9832284	9832526	9832764
30"-0-30 PSI	9832292	9832535	9832772
30"-0-60 PSI	9832305	9832543	9832780
30"-0-100 PSI	9832314	9832551	9832798
30"-0-160 PSI	9832322	9832569	9832802
30"-0-200 PSI	9832330	9832577	9832810
15 PSI	9832348	9832585	9832828
30 PSI	9832356	9832594	9832836
60 PSI	9832365	9832607	9832845
100 PSI	9832373	9832615	9832853
160 PSI	9832381	9832624	9832861
200 PSI	9832399	9832632	9832879
300 PSI	9832403	9832640	9832887
400 PSI	9832411	9832658	9832895
600 PSI	9832429	9832666	9832909
800 PSI	9832437	9832675	9832917
1,000 PSI	9832445	9832683	9832925
1,500 PSI	9832454	9832691	9832934
2,000 PSI	9832462	9832705	9832942
3,000 PSI	9832470	9832713	9832950
5,000 PSI	9832488	9832721	9832968
10,000 PSI	9832496	9832739	9832976
15,000 PSI	9832500	9832747	9832985

Product Data Sheet
00813-0100-4530, Rev DA
December 2010

Superior Performance Guided Wave Radar Level and Interface Transmitter

- *Industry leading measurement capability and reliability provided by direct switch technology*
- *Increased plant availability with advanced diagnostics and PlantWeb® functionality*
- *Increased safety and proven FMEDA suitable for SIL2 with a SFF>90%*
- *Reduced cost and increased safety from the robust modular design*
- *Reduced instrument count and process penetrations with a MultiVariable™ transmitter*
- *Improved throughput and product quality due to superior performance and accuracy*
- *Reduced startup cost through powerful and easy-to-use configuration tools and seamless plant integration*
- *Improved EMC performance and higher safety with smart galvanic interface*
- *Reduced operating costs with predictive maintenance and easy troubleshooting*



Contents

Taking Guided Wave Radar Benefits to the Next Level . . . . . page 2
Ordering Information . . . . . page 4
Specifications . . . . . page 16
Functional Specification . . . . . page 16
Performance Specification . . . . . page 28
Physical Specification . . . . . page 31
Product Certifications . . . . . page 36
Dimensional Drawings . . . . . page 39

Taking Guided Wave Radar Benefits to the Next Level

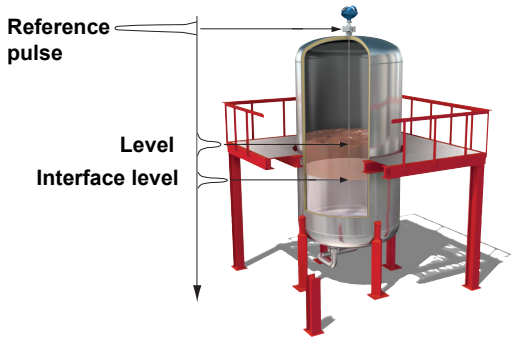

MEASUREMENT PRINCIPLE

Low power, nano-second microwave pulses are guided down a probe submerged in the process media. When a microwave pulse reaches a media with a different dielectric constant, part of the energy is reflected back to the transmitter.

The transmitter uses the residual wave of the first reflection for measuring the interface level. Part of the wave, which was not reflected at the upper product surface, continues until it is reflected at the lower product surface. The speed of this wave depends fully on the dielectric constant of the upper product.

The time difference between the transmitted and the reflected pulse is converted into a distance, and the total level or interface level is then calculated. The reflection intensity depends on the dielectric constant of the product. The higher the dielectric constant value, the stronger the reflection is.

High application flexibility



GUIDED WAVE RADAR TECHNOLOGY BENEFITS

- Highly accurate and reliable direct level measurement with no compensation needed for changing process conditions (such as density, conductivity, viscosity, pH, temperature, and pressure)
- No moving parts and no re-calibration result in minimized maintenance
- Handles vapor, dust, turbulence, and foam well
- Suitable for small tanks, difficult tank geometry, internal obstacles, and unaffected by the mechanical design of chambers
- Top down installation minimizes risk for leakages

Displacer **Guided wave radar**

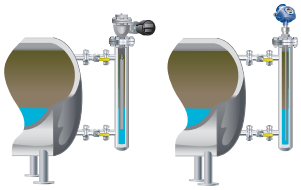

From this... → to this... in minutes

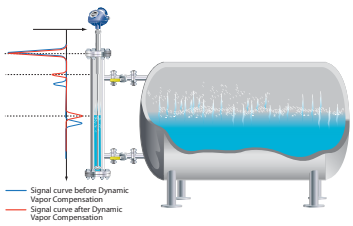

Accuracy in saturated steam

SPECIAL 5300 FEATURES

Optimized to Suit More Applications

- Suitable for most liquid and solids level applications and liquid interface applications
- Innovations to handle even the most challenging applications reliably, including process vessels, control, and safety
- A wide selection of materials, process connections, probe styles, and accessories
- A wide range of options to find the best fit in existing chambers, or a complete assembly with Rosemount 9901 high quality chambers
- The Dynamic Vapor Compensation (DVC) option automatically compensates for changes in the vapor space dielectric

Best Performance and Uptime

- Unique Direct Switch Technology (DST) and Probe End Projection (PEP) improve measurement capability and reliability
- Ability to use single lead probe for long measuring ranges, obstructions and low dielectrics ensures reliability in more applications, such as viscous media
- PEP provides a backup function for challenging applications such as plastic pellets and boiling hydrocarbons
- Smart Galvanic Interface results in a more stable microwave and EMI performance with minimized effects from outside disturbances

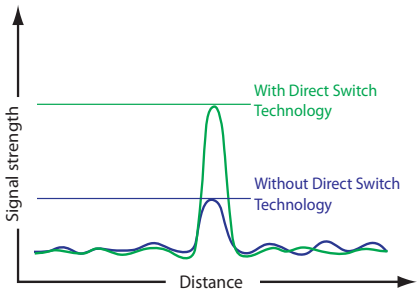

DST provides a signal that is two to five times stronger than other GWR transmitters'

Robust Design Reduces Costs and Increases Safety

- Heavy-duty unique probe solution for extreme temperature and pressures with a multiple layer of protection
- EchoLogics and smart software functions provide enhanced ability to keep track of the surface and detect a full vessel situation
- Third party approved for overfill protection and Safety Integrated System SIL2 suitability
- Electronics and cable connections in separate compartments provides safer handling and improved moisture protection

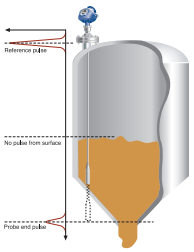

With PEP, the surface position is calculated if the surface echo becomes unavailable

Easy Installation and Plant Integration

- Easy upgrade by matching existing tank connections and cut-to-fit probes
- MultiVariable™ device reduces the number of process penetrations
- Seamless system integration with HART®, FOUNDATION™ fieldbus, Modbus, or IEC 62591 (*Wireless*HART) with the Smart Wireless THUM™ adapter
- Pre-configured or easy configuration in Rosemount Radar Master with a five-step wizard, auto connect, and online help
- Enhanced DD with step-by-step configuration and echo curve capability (HART) in tools such as AMS Device Manager, and Field Communicator
- DTM with echo curve capability for use in FDT/DTM compatible configuration tools such as PACTWare™, Yokogawa® FieldMate/PRM

Robust modular design

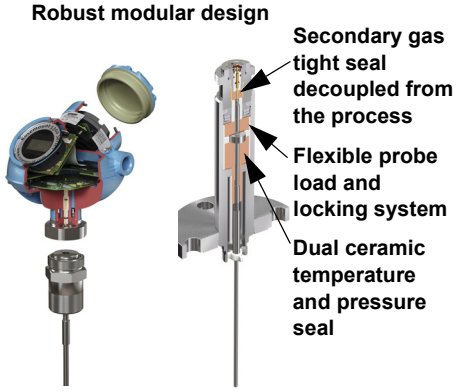

Minimized Maintenance Reduces Cost

- Easy online troubleshooting with user friendly software, utilizing powerful echo curve and logging tools
- Signal Quality Metrics (SQM) diagnostics to detect product build-up on probe or to monitor turbulence, boiling, foam, and emulsions
- Predictive maintenance with advanced diagnostics and PlantWeb alerts
- Modular design for reduced spare parts and easy replacement of the head without opening the tank

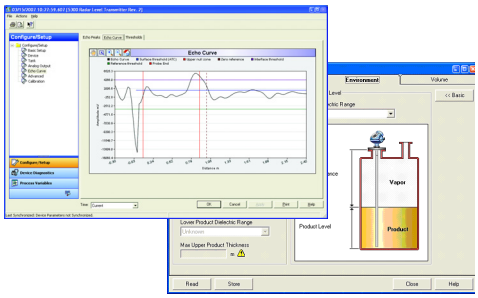

Rosemount Radar Master enables easy configuration and service with wizard, online help, echo curve and logging tools, and much more

Rosemount 5301 and 5302
Level and/or Interface in Liquids



Rosemount 5301 and 5302 Guided Wave Radar Level transmitters provide industry leading measurement capabilities and reliability in liquids. Characteristics include:

- Direct Switch Technology and Probe End Projection to handle low reflective media and long measuring ranges
- Wide range of probe styles, materials, and temperatures and pressures for application flexibility
- HART 4-20 mA, FOUNDATION fieldbus, Modbus, or IEC 62591 (*Wireless*HART) with the Smart Wireless THUM adapter
- Prior use SIL 2 suitable (QS Option)
- Advanced Diagnostics (D01 & DA1 Options)

Additional Information

Specifications: page 16
Certifications: page 36
Dimensional drawings: page 39

TABLE 1. 5301 and 5302 Level and/or Interface in Liquids Ordering Information

★ The Standard offering represents the most common options. The starred options (★) should be selected for best delivery.
The Expanded offering is subject to additional delivery lead time.

Model	Product Description		
5301	Guided Wave Radar Liquid Level or Interface Transmitter (interface available for fully submerged probe)		
5302	Guided Wave Radar Liquid Level and Interface Transmitter		
Signal Output			
Standard			**Standard**
H	4-20 mA with HART communication		★
F	FOUNDATION fieldbus		★
M	RS-485 with Modbus communication		★
Housing Material			
Standard			**Standard**
A	Polyurethane-covered Aluminum		★
Expanded			
S	Stainless Steel, Grade CF8M (ASTM A743)		
Conduit / Cable Threads			
Standard			**Standard**
1	½ - 14 NPT		★
2	M20 x 1.5 adapter		★
E	M12, 4-pin, Male connector (eurofast®)(1)		★
M	A size Mini, 4-pin, Male connector (minifast®)(1)		★
Operating Temperature and Pressure(2)		**Probe Type**	
Standard			**Standard**
S	- 15 psig (-1bar) to 580 psig (40 bar) @ 302 °F (150 °C)	All	★
H	High Temperature / High Pressure(3): 2940 psi @ 752 °F and 5000 psi @ 100 °F (203 bar @ 400 °C and 345 bar @ 38 °C)	3A, 3B, 4A, 4U, 4V, 5A and 5B	★

TABLE 1. 5301 and 5302 Level and/or Interface in Liquids Ordering Information

★ The Standard offering represents the most common options. The starred options (★) should be selected for best delivery.
The Expanded offering is subject to additional delivery lead time.

P	High Pressure[3]: Max 392 °F (200 °C): 3500 psi @ 392 °F and 5000 psi @ 100 °F (243 bar @ 200 °C and 345 bar @ 38 °C)		3B, 4A, 5A, and 5B	★
Expanded				
C	Cryogenic Temperature[3] [4]-321 °F (-196 °C) Max 392 °F (200 °C): 3500 psi @ 392 °F and 5000 psi @ 100 °F (243 bar @ 200 °C and 345 bar @ 38 °C)		3A, 3B, 4A, 5A, 5B (Only SST)	
Material of Construction[5]: Process Connection / Probe		**Probe Type**	**Valid Operation Temperature and Pressure**	
Standard				**Standard**
1	316L SST (EN 1.4404)	All	S, H, P, C	★
Expanded				
2	Alloy C-276 (UNS N10276). With plate design if flanged version. Up to class 600, PN 63 for HTHP/HP probes.	3A, 3B, 4A	S, H, P	
3	Alloy 400 (UNS N04400). With plate design if flanged version.	3A, 3B, 4A, 5A, 5B	S	
7	PTFE covered probe and flange. With plate design.	4A and 5A	S	
8	PTFE covered probe	4A and 5A	S	
H	Alloy C-276 (UNS N10276) process connection, flange, and probe[6]	3A, 3B, 4A	H, P	
Sealing, O-ring Material (Consult the factory for other o-ring materials)				
Standard				**Standard**
N	None[7]			★
V	Viton® fluoroelastomer			★
E	Ethylene Propylene			★
K	Kalrez® 6375 perfluoroelastomer			★
B	Buna-N			★
Probe Type		**Process Connection**	**Probe Lengths**	
Standard				**Standard**
3B	Coaxial, perforated. For level and interface measurement, or easier cleaning.	Flange / 1 in.[12], 1.5 in., 2 in.[12] Thread	Min: 1 ft 4 in. (0.4 m). Max: 19 ft 8 in. (6 m)	★
4A	Rigid Single Lead (8 mm)	Flange / 1 in.[12], 1.5 in., 2 in.[12] Thread / Tri-Clamp	Min: 1 ft 4 in. (0.4 m). Max: 9 ft 10 in. (3 m)	★
4B	Rigid Single Lead (13 mm)[8]	Flange / 1 in., 1.5 in., 2 in. Thread / Tri-Clamp	Min: 1 ft 4 in. (0.4 m). Max: 14 ft 9 in. (4.5 m)	★
5A	Flexible Single Lead with weight[9]	Flange / 1 in.[12], 1.5 in., 2 in.[12] Thread / Tri-Clamp	Min: 3 ft 4 in. (1 m). Max: 164 ft (50 m)	★
5B	Flexible Single Lead with chuck[10]	Flange / 1 in.[12], 1.5 in., 2 in.[12] Thread / Tri-Clamp	Min: 3 ft 4 in. (1 m). Max: 164 ft (50 m)	★
Expanded				
1A	Rigid Twin Lead[12]	Flange / 1.5 in., 2 in.[12] Thread	Min: 1 ft 4 in. (0.4 m). Max: 9 ft 10 in. (3 m)	
2A	Flexible Twin Lead with weight [12]	Flange / 1.5 in., 2 in.[12] Thread	Min: 3 ft 4 in. (1 m). Max: 164 ft (50 m)	
3A	Coaxial (for level measurement)[11]	Flange / 1 in.[12], 1.5 in., 2 in.[12] Thread	Min: 1 ft 4 in. (0.4 m). Max: 19 ft 8 in. (6 m)	
4U	Dynamic Vapor Compensation Single Rigid Probe for 2 in. pipes[13]	Flange / 1.5 in. Thread	Min: 2 ft 5 in. (0.76 m). Max: 13 ft (4 m)	

TABLE 1. 5301 and 5302 Level and/or Interface in Liquids Ordering Information

★ The Standard offering represents the most common options. The starred options (★) should be selected for best delivery.
The Expanded offering is subject to additional delivery lead time.

4V	Dynamic Vapor Compensation Single Rigid Probe for 3-4 in. pipes[13]	Flange / 1.5 in. Thread	Min: 2 ft 5 in. (0.76 m). Max: 13 ft (4 m)	
Probe Length Units				
Standard				**Standard**
E	English (feet, in.)			★
M	Metric (meters, centimeters)			★
Total Probe Length [14] (feet/m)				
Standard				**Standard**
xxx	0-164 ft or 0-50 m			★
Total Probe Length [14] (in./cm)				
Standard				**Standard**
xx	0-11 in. or 0-99 cm			★
Process Connection - Size / Type (consult the factory for other process connections)				
ASME / ANSI Flanges[15] [16]				
Standard				**Standard**
AA	2 in., 150 lb			★
AB	2 in., 300 lb			★
AC	2 in., 600 lb. HTHP / HP units			★
AD	2 in., 900 lb. HTHP / HP units			★
BA	3 in., 150 lb			★
BB	3 in., 300 lb			★
BC	3 in., 600 lb. HTHP / HP units			★
BD	3 in., 900 lb. HTHP / HP units			★
CA	4 in., 150 lb			★
CB	4 in., 300 lb			★
CC	4 in., 600 lb. HTHP / HP units			★
CD	4 in., 900 lb. HTHP / HP units			★
Expanded				
AE	2 in., 1500 lb. HTHP / HP units			
AI	2 in., 600 lb, RTJ (Ring Type Joint). HTHP / HP units			
AJ	2 in., 900 lb, RTJ (Ring Type Joint). HTHP / HP units			
AK	2 in., 1500 lb, RTJ (Ring Type Joint). HTHP / HP units			
BE	3 in., 1500 lb. HTHP / HP units			
BI	3 in., 600 lb, RTJ (Ring Type Joint). HTHP / HP units			
BJ	3 in., 900 lb, RTJ (Ring Type Joint). HTHP / HP units			
BK	3 in., 1500 lb, RTJ (Ring Type Joint). HTHP / HP units			
CE	4 in., 1500 lb. HTHP / HP units			
CI	4 in., 600 lb, RTJ (Ring Type Joint). HTHP / HP units			
CJ	4 in., 900 lb, RTJ (Ring Type Joint). HTHP / HP units			
CK	4 in., 1500 lb, RTJ (Ring Type Joint). HTHP / HP units			
DA	6 in., 150 lb			
EN (DIN) Flanges[17] [18]				
Standard				
HB	DN50, PN40			★
HC	DN50, PN63. HTHP / HP units			★
HD	DN50, PN100. HTHP / HP units			★
IA	DN80, PN16			★

TABLE 1. 5301 and 5302 Level and/or Interface in Liquids Ordering Information

★ The Standard offering represents the most common options. The starred options (★) should be selected for best delivery.
The Expanded offering is subject to additional delivery lead time.

IB	DN80, PN40		★
IC	DN80, PN63. HTHP / HP units		★
ID	DN80, PN100. HTHP / HP units		★
JA	DN100, PN16		★
JB	DN100, PN40		★
JC	DN100, PN63. HTHP / HP units		★
JD	DN100, PN100. HTHP / HP units		★
Expanded			
HE	DN50, PN160. HTHP / HP units		
HF	DN50, PN250. HTHP / HP units		
IE	DN80, PN160. HTHP / HP units		
IF	DN80, PN250. HTHP / HP units		
JE	DN100, PN160. HTHP / HP units		
JF	DN100, PN250. HTHP / HP units		
KA	DN150, PN16		
JIS Flanges[17] [19]			
Standard			**Standard**
UA	50A, 10K		★
VA	80A, 10K		★
XA	100A, 10K		★
Expanded			
UB	50A, 20K		
VB	80A, 20K		
XB	100A, 20K		
YA	150A, 10K		
YB	150A, 20K		
ZA	200A, 10K		
ZB	200A, 20K		
Threaded Connections[15]		**Probe Type**	
Standard			**Standard**
RA	1 ½ in. NPT thread	All	★
RC	2 in. NPT thread	All, standard temperature and pressure	★
Expanded			
RB	1 in. NPT thread	3A, 3B, 4A, 4B, 5A, 5B, standard temperature and pressure	
SA	1 ½ in. BSP (G 1 ½ in.) thread	All	
SB	1 in. BSP (G 1 in.) thread	3A, 3B, 4A, 4B, 5A, 5B, standard temperature and pressure	
Tri-Clamp Fittings[15]		**Probe Type**	
Expanded			
FT	1 ½ in. Tri-Clamp	4A, 5A, 5B standard temperature and pressure	
AT	2 in. Tri-Clamp	4A, 4B, 5A, 5B standard temperature and pressure	
BT	3 in. Tri-Clamp	4A, 4B, 5A, 5B standard temperature and pressure	

TABLE 1. 5301 and 5302 Level and/or Interface in Liquids Ordering Information

★ The Standard offering represents the most common options. The starred options (★) should be selected for best delivery.
The Expanded offering is subject to additional delivery lead time.

CT	4 in. Tri-Clamp	4A, 4B, 5A, 5B standard temperature and pressure	
Proprietary Flanges			
Standard			**Standard**
TF	Fisher - proprietary 316L SST (for 249B chambers) Torque Tube Flange		★
TT	Fisher - proprietary 316L SST (for 249C chambers) Torque Tube Flange		★
TM	Masoneilan - proprietary 316L SST Torque Tube Flange		★
Hazardous Locations Certifications			
Standard			**Standard**
NA	No Hazardous Locations Certifications		★
E1	ATEX Flameproof[20]		★
E3	NEPSI Flameproof[20]		★
E5	FM Explosion-proof[20]		★
E6	CSA Explosion-proof[20]		★
E7	IECEx Flameproof[20]		★
I1	ATEX Intrinsic Safety		★
IA	ATEX FISCO Intrinsic Safety[21]		★
I3	NEPSI Intrinsic Safety		★
IC	NEPSI FISCO Intrinsic Safety[21]		★
I5	FM Intrinsic Safety and Non-Incendive		★
IE	FM FISCO Intrinsic Safety[21]		★
I6	CSA Intrinsic Safety		★
IF	CSA FISCO Intrinsic Safety[21]		★
I7	IECEx Intrinsic Safety		★
IG	IECEx FISCO Intrinsic Safety[21]		★
Expanded			
E2	INMETRO Flameproof		
I2	INMETRO Intrinsic Safety		
IB	INMETRO FISCO Intrinsic Safety		
E4	TIIS Flameproof		
KA	ATEX, FM, CSA Flameproof/Explosion-proof[20]		
KB	ATEX, FM, IECEx Flameproof/Explosion-proof[20]		
KC	ATEX, CSA, IECEx Flameproof/Explosion-proof[20]		
KD	FM, CSA, IECEx Flameproof/Explosion-proof[20]		
KE	ATEX, FM, CSA Intrinsic Safety		
KF	ATEX, FM, IECEx Intrinsic Safety		
KG	ATEX, CSA, IECEx Intrinsic Safety		
KH	FM, CSA, IECEx Intrinsic Safety		
KI	FISCO - ATEX, FM, CSA Intrinsic Safety[21]		
KJ	FISCO - ATEX, FM, IECEX Intrinsic Safety[21]		
KK	FISCO - ATEX, CSA, IECEX Intrinsic Safety[21]		
KL	FISCO - FM, CSA, IECEX Intrinsic Safety[21]		
Options			
Standard			**Standard**
M1	Integral digital display		★
P1	Hydrostatic testing[22]		★
N2	NACE material recommendation per MR-0175 and MR-0103[23]		★

TABLE 1. 5301 and 5302 Level and/or Interface in Liquids Ordering Information

★ The Standard offering represents the most common options. The starred options (★) should be selected for best delivery.
The Expanded offering is subject to additional delivery lead time.

LS	Long stud[24] 9.8 in (250 mm) for flexible single lead probe to prevent contact with wall/nozzle. Standard height is 3.9 in (100 mm) for probes 5A and 5B.		★
T1	Transient Protection Terminal Block (standard with FISCO options)		★
W3	2.2 lb (1 kg) weight for flexible single lead probe (5A). L=5.5 in. (140 mm)		★
Expanded			
BR	Mounting Bracket for 1.5 in. NPT Process Connection (RA)		
W2	0.79 lb (0.36 kg) short weight for flexible single lead probe[25]. L=2 in. (50 mm)		
Special Configuration (Software)			
Standard			**Standard**
C1	Factory configuration (CDS required with order)		★
C4	Namur alarm and saturation levels, high alarm		★
C5	Namur alarm and saturation levels, low alarm		★
C8	Low alarm [26] (standard Rosemount alarm and saturation levels)		★
Special Certifications			
Standard			**Standard**
Q4	Calibration Data Certification		★
Q8	Material Traceability Certification per EN 10204 3.1[27]		★
QS	Prior-use certificate of FMEDA Data. Only available with HART 4-20 mA output (output code H).		★
U1	WHG Overfill Approval. Only available with HART 4-20 mA output (output code H)		★
Expanded			
QG	GOST Primary Verification Certificate		
PlantWeb Diagnostic Functionality			
Standard			**Standard**
D01	FOUNDATION fieldbus Diagnostics Suite		★
DA1	HART Diagnostics Suite		★
Centering Discs		**Outer Diameter**	
Standard			**Standard**
S2	2 in. Centering disc[28]	1.8 in. (45 mm)	★
S3	3 in. Centering disc[28]	2.7 in. (68 mm)	★
S4	4 in. Centering disc[28]	3.6 in. (92 mm)	★
P2	2 in. Centering disc PTFE[29]	1.8 in. (45 mm)	★
P3	3 in. Centering disc PTFE[29]	2.7 in. (68 mm)	★
P4	4 in. Centering disc PTFE[29]	3.6 in. (92 mm)	★
Expanded			
S6	6 in. Centering disc[28]	5.55 in. (141 mm)	
S8	8 in. Centering disc[28]	7.40 in. (188 mm)	
P6	6 in. Centering disc PTFE[29]	5.55 in. (141 mm)	
P8	8 in. Centering disc PTFE[29]	7.40 in. (188 mm)	
Remote Housing Mounting			
Expanded			
B1	1m / 3.2 ft. Remote Housing Mounting Cable and Bracket		
B2	2m / 6.5 ft. Remote Housing Mounting Cable and Bracket		
B3	3m / 9.8 ft. Remote Housing Mounting Cable and Bracket		
Consolidate to Chamber			
Expanded			
XC	Consolidate to Chamber[30]		

(1) Not available with Flame/Explosion-proof approvals (E1, E3, E5, E6, E7, KA, KB, KC, and KD)
(2) Process seal rating. Final rating depends on flange and O-ring selection. See "Temperature and Pressure Limits" on page 22.

(3) Requires option None for sealing (no O-ring).
(4) Welding Procedure Qualification Record Documentation will be supplied.
(5) For other materials, consult the factory.
(6) Consult the factory for this option.
(7) Requires High Temperature High Pressure (code H), High Pressure (code P), or Cryogenic (code C) probe.
(8) Available in SST. Consult the factory for other materials.
(9) 0.79 lb (0.36 kg) standard weight for flexible single lead probe. L=5.5 in. (140 mm).
For PTFE covered probes: 2.2 lb (1 kg) standard weight for flexible single lead probe. L=17.1 in. (434 mm).
(10) Extra length for fastening is added in factory.
(11) Requires model 5301. 1.3 lb (0.6 kg) standard weight for twin flex lead probe. L=3.5 in. (90 mm).
(12) Only available with standard temperature and pressure (code S).
(13) This is an HTHP probe.
(14) Probe weight included if applicable. Give the total probe length in feet and inches or meters and centimeters, depending on selected probe length unit. If tank height is unknown, please round up to an even length when ordering. Probes can be cut to exact length in field. Maximum allowable length is determined by process conditions. See "Tank Connection and Probe" on page 31 for more probe length guidance.
(15) Available in 316L SST. For other materials consult the factory.
(16) Raised face type for SST flanges up to class 1500.
(17) Available in 316L and EN 1.4404. For other materials consult the factory.
(18) Type A flat face for SST flanges up to PN100 and type B2 raised face for SST flanges PN160 and PN250.
(19) Raised face type for SST flanges.
(20) Probes are intrinsically safe.
(21) Requires FOUNDATION fieldbus signal output (U_i parameter listed in "Product Certifications" on page 36).
(22) For standard tank connection, only available with flange.
(23) For Material SST, Alloy C-276 and Alloy 400; Probe Type 3A, 3B, 4A, 4B, 4U, and 4V.
(24) Not available with PTFE covered probes.
(25) Only for Material of Construction code 1 and 3. For other materials, consult the factory.
(26) The standard alarm setting is high.
(27) Certificate includes all pressure retaining wetted parts.
(28) Available for SST and Alloy C-276 probes, type 2A, 4A, 4B, and 5A. Same disc material as probe material. For more information, see "Centering Discs" on page 35.
(29) Available for probe types 2A, 4A, 4B and 5A, except for HTHP.
(30) Not available for Cryogenic probe.

Example Model String: 5301-H-A-1-S-1-V-1A-M-002-05-AA-I1-M1C1. E-002-05, means 2 ft and 5 in. probe length. M-002-05, means 2.05 m.

Rosemount 5303
Level for Solids

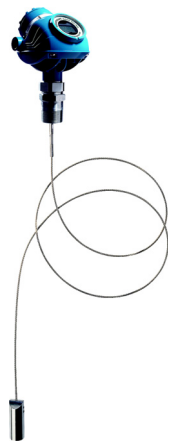

Rosemount 5303 Guided Wave Radar Level transmitter provides industry leading measurement capabilities and reliability on solids. Characteristics include:

- Direct Switch Technology and Probe End Projection to handle low reflective media and long measuring ranges
- Measurement independent of dust, moisture and material fluctuations
- HART 4-20 mA, FOUNDATION fieldbus, Modbus, or IEC 62591 (*Wireless*HART) with the Smart Wireless THUM adapter
- Probes for high physical weight loads (probe type 6A and 6B)
- Long stud available to prevent contact with nozzle (LS option)

Additional Information

Specifications: page 16
Certifications: page 36
Dimensional drawings: page 39

TABLE 2. 5303 Level for Solids Ordering Information

★ The Standard offering represents the most common options. The starred options (★) should be selected for best delivery. The Expanded offering is subject to additional delivery lead time.

Model	Product Description		
5303	Guided Wave Solids Level Transmitter		
Signal Output			
Standard			**Standard**
H	4-20 mA with HART communication		★
F	FOUNDATION fieldbus		★
M	RS-485 with Modbus communication		★
Housing Material			
Standard			**Standard**
A	Polyurethane-covered Aluminum		★
Expanded			
S	Stainless Steel, Grade CF8M (ASTM A743)		
Conduit / Cable Threads			
Standard			**Standard**
1	½ - 14 NPT		★
2	M20 x 1.5 adapter		★
E	M12, 4-pin, Male connector (eurofast®)(1)		★
M	A size Mini, 4-pin, Male connector (minifast®)(1)		★
Operating Temperature and Pressure		**Probe Type**	
Standard			**Standard**
S	- 15 psig (-1bar) to 580 psig (40 bar) @ 302 °F (150 °C) (2)	Single Lead Probes only	★
Material of Construction(3): Process Connection / Probe		**Probe Type**	
Standard			**Standard**
1	316L SST (EN 1.4404)	Single Lead Probes only	★
Sealing, O-ring Material (Consult factory for other o-ring materials)			
Standard			**Standard**
V	Viton® fluoroelastomer		★
E	Ethylene Propylene		★

TABLE 2. 5303 Level for Solids Ordering Information

★ The Standard offering represents the most common options. The starred options (★) should be selected for best delivery.
The Expanded offering is subject to additional delivery lead time.

K	Kalrez® 6375 perfluoroelastomer			★
B	Buna-N			★
Probe Type		**Process Connection**	**Probe Lengths**	
Standard				**Standard**
5A	Flexible Single Lead with weight, 4 mm(4)	Flange / 1 in., 1.5 in., 2 in.Thread	Min: 3 ft 4 in. (1 m). Max: 115 ft. (35 m)	★
5B	Flexible Single Lead with chuck, 4 mm(5)	Flange / 1 in., 1.5 in., 2 in. Thread	Min: 3 ft 4 in. (1 m). Max: 115 ft. (35 m)	★
6A	Flexible Single Lead with weight, 6 mm(6)	Flange / 1 in., 1.5 in., 2 in. Thread	Min: 3 ft 4 in. (1 m). Max: 164 ft. (50 m)	★
6B	Flexible Single Lead with chuck, 6 mm(5)	Flange / 1 in., 1.5 in., 2 in. Thread	Min: 3 ft 4 in. (1 m). Max: 164 ft. (50 m)	★
Probe Length Units				
Standard				**Standard**
E	English (feet, in.)			★
M	Metric (meters, centimeters)			★
Total Probe Length (7) (feet/m)				
Standard				**Standard**
xxx	0-164 ft or 0-50 m			★
Total Probe Length (7) (in./cm)				
Standard				**Standard**
xx	0-11 in. or 0-99 cm			★
Process Connection - Size / Type (consult the factory for other process connections)				
ASME / ANSI Flanges(8)				
Standard				**Standard**
AA	2 in., 150 lb			★
AB	2 in., 300 lb			★
BA	3 in., 150 lb			★
BB	3 in., 300 lb			★
CA	4 in., 150 lb			★
CB	4 in., 300 lb			★
Expanded				
DA	6 in., 150 lb			
EN (DIN) Flanges(9)				
Standard				**Standard**
HB	DN50, PN40			★
IA	DN80, PN16			★
IB	DN80, PN40			★
JA	DN100, PN16			★
JB	DN100, PN40			★
Expanded				
KA	DN150, PN16			
JIS Flanges(9)				
Standard				**Standard**
UA	50A, 10K			★
VA	80A, 10K			★
XA	100A, 10K			★

TABLE 2. 5303 Level for Solids Ordering Information

★ The Standard offering represents the most common options. The starred options (★) should be selected for best delivery. The Expanded offering is subject to additional delivery lead time.

Expanded			
UB	50A, 20K		
VB	80A, 20K		
XB	100A, 20K		
YA	150A, 10K		
YB	150A, 20K		
ZA	200A, 10K		
ZB	200A, 20K		
Threaded Connections[8]		**Probe Type**	
Standard			**Standard**
RA	1 ½ in. NPT thread	5A, 5B, 6A, 6B, std. temp. and pressure	★
RC	2 in. NPT thread	5A, 5B, 6A, 6B, std. temp. and pressure	★
Expanded			
RB	1 in. NPT thread	5A, 5B, 6A, 6B, std. temp. and pressure	
SA	1 ½ in. BSP (G 1 ½ in.) thread	5A, 5B, 6A, 6B, std. temp. and pressure	
SB	1 in. BSP (G 1 in.) thread	5A, 5B, 6A, 6B, std. temp. and pressure	
Hazardous Locations Certifications			
Standard			**Standard**
NA	No Hazardous Locations Certifications		★
E1	ATEX Flameproof		★
E3	NEPSI Flameproof		★
E5	FM Explosion-proof		★
E6	CSA Explosion-proof		★
E7	IECEx Flameproof		★
I1	ATEX Intrinsic Safety		★
IA	ATEX FISCO Intrinsic Safety[10]		★
I3	NEPSI Intrinsic Safety		★
IC	NEPSI FISCO Intrinsic Safety[10]		★
I5	FM Intrinsic Safety and Non-Incendive		★
IE	FM FISCO Intrinsic Safety[10]		★
I6	CSA Intrinsic Safety		★
IF	CSA FISCO Intrinsic Safety[10]		★
I7	IECEx Intrinsic Safety		★
IG	IECEx FISCO Intrinsic Safety[10]		★
Expanded			
E2	INMETRO Flameproof		
I2	INMETRO Intrinsic Safety		
IB	INMETRO FISCO Intrinsic Safety		
E4	TIIS Flameproof		
KA	ATEX, FM, CSA Flameproof/Explosion-proof		
KB	ATEX, FM, IECEx Flameproof/Explosion-proof		
KC	ATEX, CSA, IECEx Flameproof/Explosion-proof		
KD	FM, CSA, IECEx Flameproof/Explosion-proof		
KE	ATEX, FM, CSA Intrinsic Safety		
KF	ATEX, FM, IECEx Intrinsic Safety		
KG	ATEX, CSA, IECEx Intrinsic Safety		
KH	FM, CSA, IECEx Intrinsic Safety		
KI	FISCO - ATEX, FM, CSA Intrinsic Safety[10]		

TABLE 2. 5303 Level for Solids Ordering Information

★ The Standard offering represents the most common options. The starred options (★) should be selected for best delivery.
The Expanded offering is subject to additional delivery lead time.

KJ	FISCO - ATEX, FM, IECEX Intrinsic Safety (10)	
KK	FISCO - ATEX, CSA, IECEX Intrinsic Safety(10)	
KL	FISCO - FM, CSA, IECEX Intrinsic Safety(10)	
Options		
Standard		**Standard**
M1	Integral digital display	★
P1	Hydrostatic testing(11)	★
LS	Long stud 9.8 in (250 mm) for flexible single lead probe to prevent contact with wall/nozzle. Standard height is 3.9 in (100 mm) for probes 5A and 5B; 5.9 in. (150 mm) for probes 6A and 6B	★
T1	Transient Protection Terminal Block (standard with FISCO options)	★
W3	2.2 lb (1 kg) weight for flexible single lead probe (5A). L=5.5 in. (140 mm)	★
Expanded		
BR	Mounting Bracket for 1.5 in. NPT Process Connection (RA)(12)	
Special Configuration (Software)		
Standard		**Standard**
C1	Factory configuration (CDS required with order)	★
C4	Namur alarm and saturation levels, high alarm	★
C5	Namur alarm and saturation levels, low alarm	★
C8	Low alarm (13) (standard Rosemount alarm and saturation levels)	★
Special Certifications		
Standard		**Standard**
Q4	Calibration Data Certification	★
Q8	Material Traceability Certification per EN 10204 3.1(14)	★
QS	Prior-use certificate of FMEDA Data. Only available with HART 4-20 mA output (output code H).	★
U1	WHG Overfill Approval. Only available with HART 4-20 mA output (output code H)	★
Expanded		
QG	GOST Primary Verification Certificate	
PlantWeb Diagnostic Functionality		
Standard		**Standard**
D01	FOUNDATION fieldbus Diagnostics Suite	★
DA1	HART Diagnostics Suite	★
Remote Housing Mounting		
Expanded		
B1	1m / 3.2 ft. Remote Housing Mounting Cable and Bracket	
B2	2m / 6.5 ft. Remote Housing Mounting Cable and Bracket	
B3	3m / 9.8 ft. Remote Housing Mounting Cable and Bracket	

(1) Not available with Flame/Explosion-proof approvals (E1, E3, E5, E6, E7, KA, KB, KC, and KD)
(2) Process seal rating. Final rating depends on flange and O-ring selection. See "Tank Connection and Probe" on page 31.
(3) For other materials, consult the factory.
(4) 0.79 lb (0.36 kg) standard weight for flexible single lead probe. L=5.5 in. (140 mm).
(5) Extra length for fastening is added in the factory.
(6) 1.2 lb (0.56 kg) standard weight for flexible single lead probe. L=5.5 in. (140 mm).
(7) Probe weight included if applicable. Give the total probe length in feet and inches or meters and centimeters, depending on selected probe length unit. If tank height is unknown, please round up to an even length when ordering. Probes can be cut to exact length in field. Maximum allowable length is determined by process conditions. See "Tank Connection and Probe" on page 31 for more probe length guidance.
(8) Available in 316L SST. For other materials, consult the factory.
(9) Available in 316L and EN 1.4404. For other materials consult the factory.
(10) Requires FOUNDATION fieldbus signal output (U_i parameter listed in "Product Certifications" on page 36).
(11) Available for flanged connection.
(12) Only for Standard Temperature and Pressure.
(13) The standard alarm setting is high.
(14) Certificate includes all pressure retaining wetted parts.

Example Model String: 5303-H-A-1-S-1-V-6A-M-025-50-AA-I1-M1C1. E-025-05, means 25 ft and 5 in. probe length. M-025-50, means 25.5 m.

ACCESSORIES

TABLE 3. Accessories Ordering Information

Process Connection - Size/Type (consult the factory for other process connections)			
Centering discs[1] [2]		**Outer Diameter**	
Standard			**Standard**
03300-1655-0001	Kit, 2-in. Centering Disk, SST, Rigid Single	1.8 in. (45 mm)	★
03300-1655-0002	Kit, 3-in. Centering Disk, SST, Rigid Single	2.7 in. (68 mm)	★
03300-1655-0003	Kit, 4-in. Centering Disk, SST, Rigid Single	3.6 in. (92 mm)	★
03300-1655-0006	Kit, 2-in. Centering Disk, PTFE, Rigid Single	1.8 in. (45 mm)	★
03300-1655-0007	Kit, 3-in. Centering Disk, PTFE, Rigid Single	2.7 in. (68 mm)	★
03300-1655-0008	Kit, 4-in. Centering Disk, PTFE, Rigid Single	3.6 in. (92 mm)	★
03300-1655-1001	Kit, 2-in. Centering Disk, SST, Single / Twin Flex Lead	1.8 in. (45 mm)	★
03300-1655-1002	Kit, 3-in. Centering Disk, SST, Single / Twin Flex Lead	2.7 in. (68 mm)	★
03300-1655-1003	Kit, 4-in. Centering Disk, SST, Single / Twin Flex Lead	3.6 in. (92 mm)	★
03300-1655-1006	Kit, 2-in. Centering Disk, PTFE, Single / Twin Flex Lead	1.8 in. (45 mm)	★
03300-1655-1007	Kit, 3-in. Centering Disk, PTFE, Single / Twin Flex Lead	2.7 in. (68 mm)	★
03300-1655-1008	Kit, 4-in. Centering Disk, PTFE, Single / Twin Flex Lead	3.6 in. (92 mm)	★
Expanded			
03300-1655-0004	Kit, 6-in. Centering Disk, SST, Rigid Single	5.55 in. (141 mm)	
03300-1655-0005	Kit, 8-in. Centering Disk, SST, Rigid Single	7.40 in. (188 mm)	
03300-1655-0009	Kit, 6-in. Centering Disk, PTFE, Rigid Single	5.55 in. (141 mm)	
03300-1655-0010	Kit, 8-in. Centering Disk, PTFE, Rigid Single	7.40 in. (188 mm)	
03300-1655-1004	Kit, 6-in. Centering Disk, SST, Single / Twin Flex Lead	5.55 in. (141 mm)	
03300-1655-1005	Kit, 8-in. Centering Disk, SST, Single / Twin Flex Lead	7.40 in. (188 mm)	
03300-1655-1009	Kit, 6-in. Centering Disk, PTFE, Single / Twin Flex Lead	5.55 in. (141 mm)	
03300-1655-1010	Kit, 8-in. Centering Disk, PTFE, Single / Twin Flex Lead	7.40 in. (188 mm)	
Vented Flanges[3]			
Expanded			
03300-1812-9001	Fisher 249B		
03300-1812-9002	Fisher 249C		
03300-1812-9003	Masoneilan		
Flushing Connection Rings			
DP0002-2111-S6	2 in. ANSI, ¼ in. NPT connection		
DP0002-3111-S6	3 in. ANSI, ¼ in. NPT connection		
DP0002-4111-S6	4 in. ANSI, ¼ in. NPT connection		
DP0002-5111-S6	DN50, ¼ in. NPT connection		
DP0002-8111-S6	DN80, ¼ in. NPT connection		
Other			
Standard			**Standard**
03300-7004-0001	Viator HART Modem and cables (RS232 connection)		★
03300-7004-0002	Viator HART Modem and cables (USB connection)		★

(1) If a centering disc is required for a flanged probe, the centering disc can be ordered with options Sx or Px on page 9 in the model code. If a centering disc is required for a threaded connection, or as a spare part, it should be ordered using the item numbers listed below.
(2) To order a centering disc in a different material consult the factory.
(3) 1½ in. NPT threaded connection (RA) is required.

Functional Specification

General	
Field of Application	Liquids and semi-liquids level and/or liquid/liquid interfaces or solids level • Model 5301, for liquid level or submerged interface measurements • Model 5302, for liquid level and interface measurements • Model 5303, for solid level measurements
Measurement Principle	Time Domain Reflectometry (TDR) (See “Measurement Principle” on page 2 for a description of how it works)
Microwave Output Power	Nominal 300 µW, Max. 45 mW
Telecommunication (FCC and R&TTE)	FCC part 15 (1998) subpart B and R&TTE (EU directive 99/5/EC). Considered to be an unintentional radiator under the Part 15 rules
Humidity	0 - 100% Relative Humidity
Start-up Time	< 40 s
Internal Power Consumption	< 50 mW in normal operation
4-20 mA HART (Output Option Code H) - (See Ordering Information in Table 1 on page 4 and Table 2 on page 11)	
Output	Two-wire, 4–20 mA. Digital process variable is superimposed on 4–20 mA signal, and available to any host that conforms to the HART protocol. The HART signal can be used in a multidrop mode. 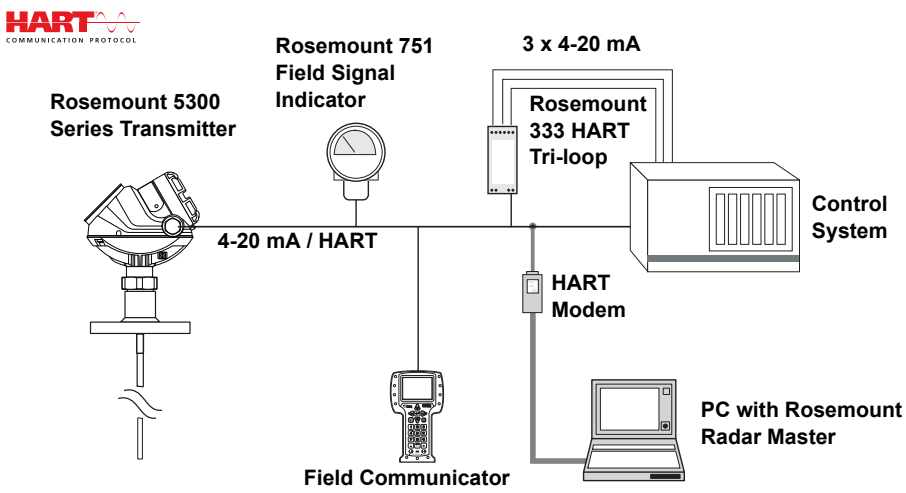
Signal Wiring	Recommended output cabling is twisted shielded pairs, 18-12 AWG
HART Tri-loop	 By sending the digital HART signal to the optional HART Tri-loop, it is possible to have up to three additional 4–20 mA analog signals. See the Rosemount 333 HART Tri-loop Product Data Sheet (Document No. 00813-0100-4754) for additional information
Smart Wireless THUM Adapter	 The optional Smart Wireless THUM adapter can be mounted directly on the transmitter or by using a remote mounting kit. IEC 62591 (*Wireless*HART) enables access to multi-variable data and diagnostics, and adds wireless to almost any measurement point. See the Rosemount Smart Wireless THUM adapter Product Data Sheet (Document No. 00813-0100-4075) and Smart Wireless THUM Adapter for Rosemount Process Level Transmitter Applications (Document No. 00840-0100-4026)

External Power Supply[1]	The input voltage (U_I) for HART is 16-42.4 Vdc (16-30 Vdc in IS applications, and 20-42.4 Vdc in Explosion-proof / Flameproof applications). For Flameproof/Explosion-proof installations the Rosemount 5300 Series transmitters have a built-in barrier; no external barrier needed. When a Smart Wireless THUM adapter is fitted, it adds a maximum drop of 2.5 Vdc in the connected loop 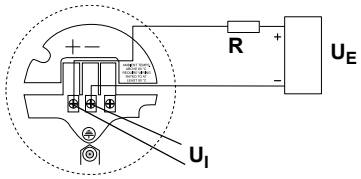 R = Load Resistance (Ω); U_E = External Power Supply Voltage (Vdc); U_I = Input Voltage (Vdc)
Minimum Input Voltage (U_I) at Different Currents	Current: 3.75 mA Non-Hazardous Installations and Intrinsically Safe Installations: 16 Vdc Explosion-proof / Flameproof Installations: 20 Vdc Current: 21.75 mA Non-Hazardous Installations and Intrinsically Safe Installations: 11 Vdc Explosion-proof / Flameproof Installations: 15.5 Vdc
IS Parameters	See “Product Certifications” on page 36
Signal on Alarm	Standard: Low = 3.75 mA, High = 21.75 mA Namur NE43: Low = 3.60 mA, High = 22.50 mA
Saturation Levels	Standard: Low = 3.9 mA, High = 20.8 mA Namur NE43: Low = 3.8 mA, High = 20.5 mA

Load Limitations

Maximum load resistance is determined by the voltage level of the external power supply, as described by:

Non-Hazardous Installations

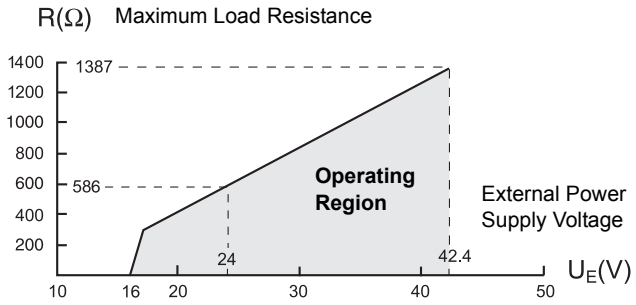

Intrinsically Safe Installations

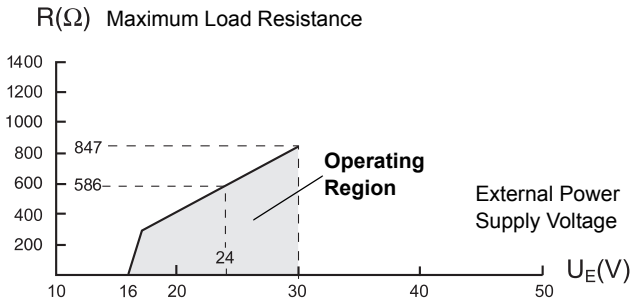

Explosion-proof / Flameproof (EEx d) Installations

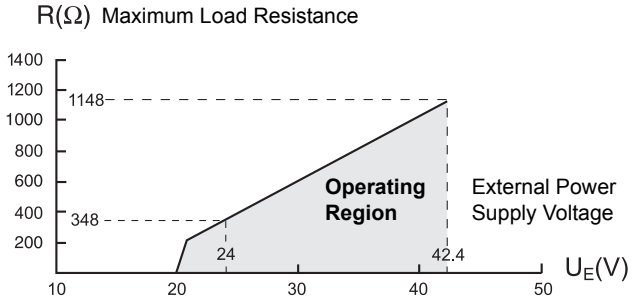

NOTE
For the EEx d case, the diagram is only valid if the HART® load resistance is at the + side and if the - side is grounded, otherwise the load resistance value is limited to 435 Ω.

FOUNDATION™ fieldbus (Output Option Code F) - (See Ordering Information in Table 1 on page 4 and Table 2 on page 11)	
Output	**FOUNDATION™ fieldbus** 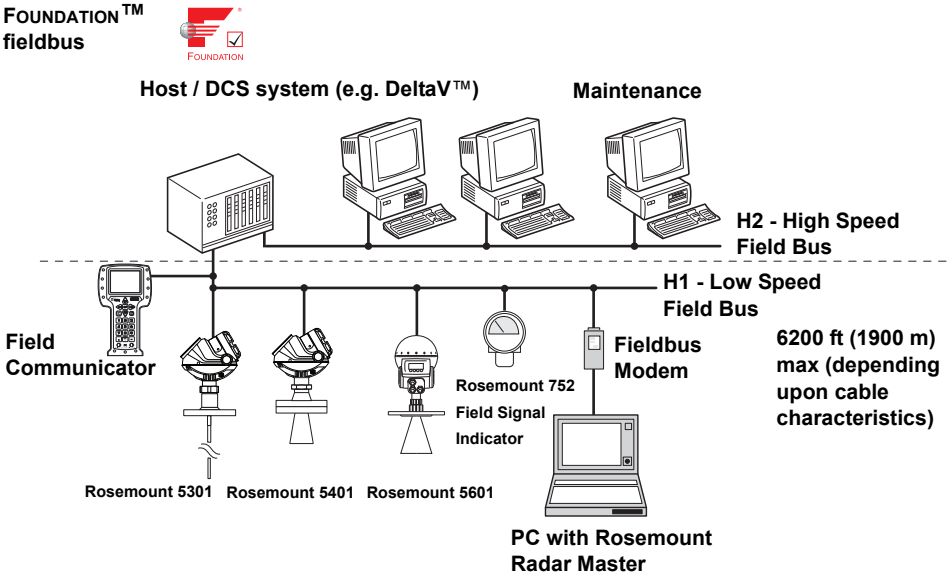
External Power Supply[1]	The input voltage for FOUNDATION™ fieldbus is 9-32 Vdc (9-30 Vdc in IS applications, and 16-32 Vdc in Explosion-proof/Flameproof applications) The input voltage for FISCO, IS applications is 9-17.5 Vdc For Flameproof/Explosion-proof installations the Rosemount 5300 Series transmitters have a built-in barrier; no external barrier needed.
Quiescent Current Draw	21 mA
FOUNDATION fieldbus Blocks	Resource block, 3 Transducer blocks, 6 AI blocks, PID block, ISEL block, SGCR block, ARTH block, and OS block
FOUNDATION fieldbus Class (Basic or Link Master)	Link Master (LAS)
FOUNDATION fieldbus Block Execution Time	AI-block: 30 ms. PID-block: 40 ms ARTH-, ISEL-, OSPL-block: 65 ms. CHAR-block: 75 ms
FOUNDATION fieldbus Instantiation	No
Conforming FOUNDATION fieldbus	ITK 5.0
FOUNDATION fieldbus PlantWeb Alert Support	Yes

Modbus (Output Option Code M) - (See Ordering Information in Table 1 on page 4 and Table 2 on page 11)	
Output	The RS-485 Modbus version communicates by Modbus RTU, Modbus ASCII, and Levelmaster protocols. 8 data bits, 1 start bit, 1 stop bit, and software selectable parity. Baud Rate: 1200, 2400, 4800, 9600 (default), and 19200 bits/s. Address Range: 1 to 255 (default device address is 246). HART communication is used for configuration via the HART terminals or tunneling via the RS-485. 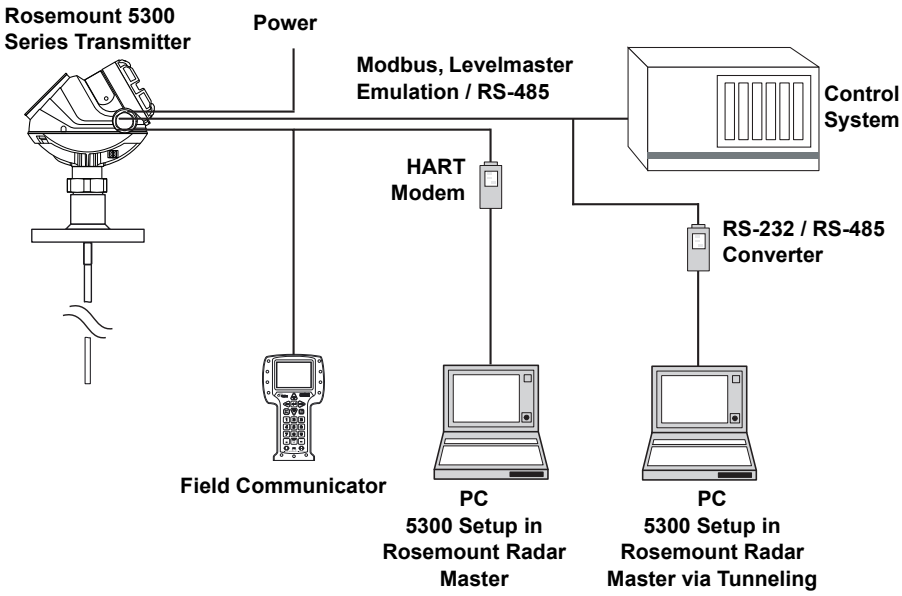
External Power Supply[1]	The input voltage U_i for Modbus is 8-30 Vdc (max. rating) Power Consumption: < 0.5 W (with HART address=1) < 1.2 W (incl. four HART slaves) 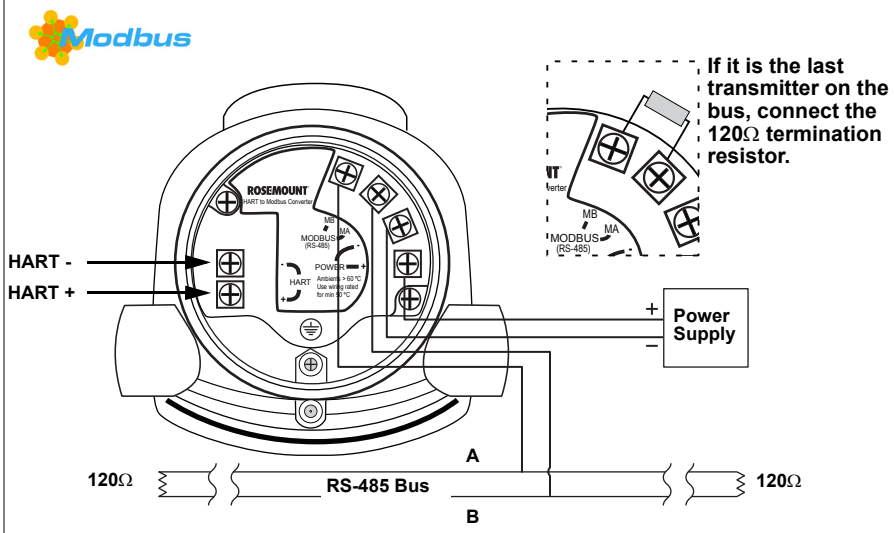 For Flameproof/Explosion-proof installations the Rosemount 5300 Series transmitters have a built-in barrier; no external barrier needed.

Display and Configuration

Integral Display
(Options Code M1)

The integral digital display can toggle between: level, distance, volume, internal temperature, interface distance, interface level, peak amplitudes, interface thickness, percentage of range, analog current out
Note: The display cannot be used for configuration purposes

Remote Display

Data can be read from the optional integral display or remotely using the Rosemount 751 Field Signal Indicator for 4-20 mA / HART (see Product Data Sheet, Document No. 00813-0100-4378), or the Rosemount 752 Remote Indicator for FOUNDATION™ fieldbus (see Product Data Sheet, Document No. 00813-0100-4377)

Configuration Tools

HART: Rosemount Radar Master, Emerson Field Communicator, AMS Device Manager, or any other DD (Device Description) compatible host system
FOUNDATION™ fieldbus: Rosemount Radar Master, Emerson Field Communicator, DeltaV, or any other DD (Device Description) compatible host system
DTM (compliant with version 1.2 of the FDT/DTM specification) supporting configuration in for instance Yokogawa Fieldmate/PRM, E+H™ FieldCare, and PactWare™

Output Units

Level, Interface and Distance: ft, inches, m, cm, or mm
Level Rate: ft/s, m/s, in./min, m/h
Volume: ft^3, $inch^3$, US gals, Imp gals, barrels, yd^3, m^3, or liters
Temperature: °F and °C

Output Variables

	5301	5302	5303	PV, SV, TV, QV
Level	X	X	X	X
Distance to Level (Ullage)	X	X	X	X
Level Rate	X	X	X	X
Signal Strength	X	X	X	X
Volume	X	X	X	X
Internal Temperature	X	X	X	X
Interface Level	(X)(1)	X		X
Interface Distance	(X)(1)	X		X
Interface Level Rate	(X)(1)	X		X
Interface Signal Strength	(X)(1)	X		X
Upper Layer Thickness	X	X		X
Lower Volume	(X)(1)	X		X
Upper Volume	(X)(1)	X		X
Signal Quality	X	X	X	(X)(2)
Surface/Noise Margin	X	X	X	(X)(2)
Vapor DC	X			(X)(2)
Analog Output Current(3)	X	X	X	
% of Range(4)	X	X	X	

(1) Interface measurement only for fully submerged probe, see page 25
(2) Not available as primary variable
(3) LCD variable only. Not available for FOUNDATION fieldbus, Modbus Signal Output, or for HART units in fixed current mode
(4) LCD variable only. Not available for FOUNDATION fieldbus Signal Output

Diagnostics

Transmitter diagnostics with alerts include hardware and software errors, electronics temperature, probe missing, and invalid measurement and configuration error diagnostics. In addition to this, echo curve and variable logging including signal strength facilitate easy on-line troubleshooting

Advanced Diagnostics

Signal Quality Metrics monitors the degradation of level signal relative to excess noise.
This can schedule the cleaning of the probe or to detect and monitor turbulence, boiling, foam, and emulsions. It can be ordered by choosing the D01 or DA1 option

Damping

0-60 s (2 s, default value)

Temperature and Pressure Limits	
Ambient Temperature	The maximum and minimum ambient temperature for the electronics depends on the process temperature (as described by the graph below) *and* on the approval (see “Product Certifications” on page 36). 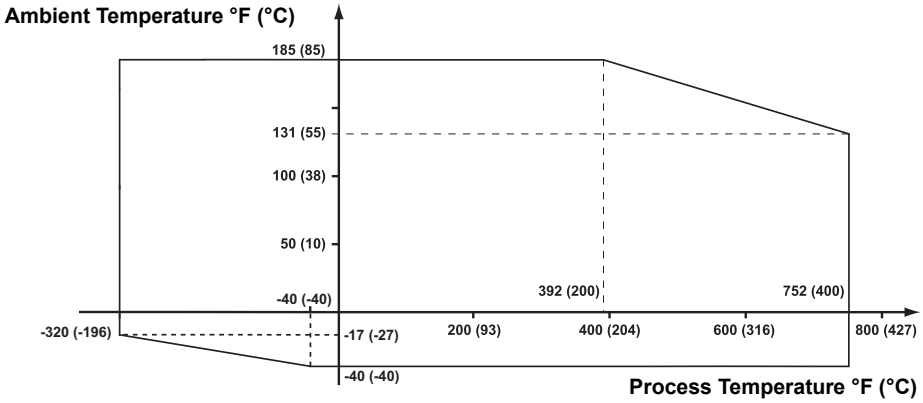 **Note:** • Nozzle insulation for the HTHP version (Operating Temperature and Pressure code H) should not exceed 4 in. (10 cm) • The temperature range for the optional Integral Display is -4 °F to 158 °F (-20 °C to 70 °C) • In applications where the ambient temperature exceeds the limits of the electronics, a Remote Mounting connection can be used. The maximum temperature for the Remote Mounting connection at the vessel connection point is 302 °F (150 °C)
Storage Temperature	-58 °F to 194 °F (-50 °C to 90 °C) With Integral Display: -40 °F to 185 °F (-40 °C to 85 °C)

Process Temperature[2]

Standard (Std) tank connection (Operating Temperature and Pressure code S):

Max. Rating, Standard Connections

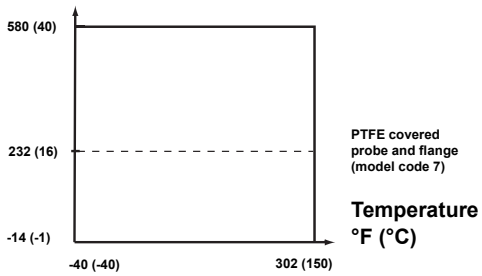

Final rating depends on flange and O-ring selection. The table on page 26 gives the temperature ranges for standard tank seals with different O-ring materials.

High Temperature and High Pressure (HTHP) tank connection
(Operating Temperature and Pressure code H):

Max. Rating, HTHP Connections

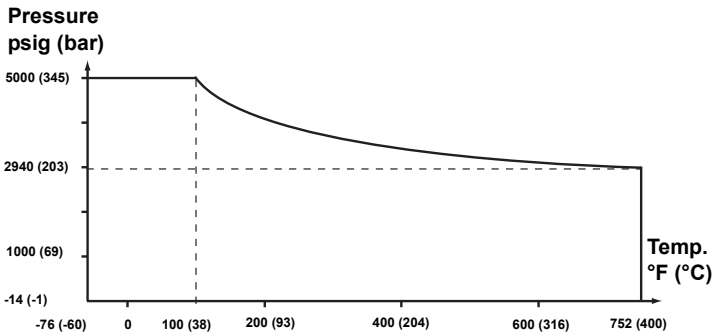

High Pressure (HP) tank connection (Operating Temperature and Pressure code P):

Max. Rating, HP Connections

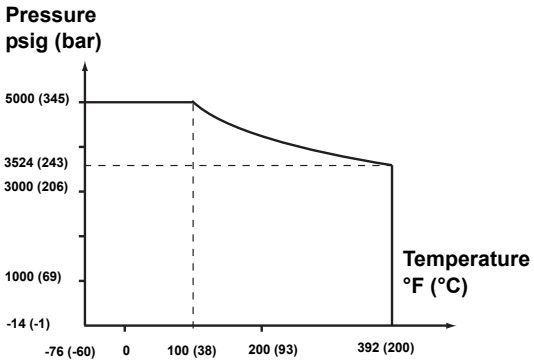

	Cryogenic Temperature tank connection (Operating Temperature and Pressure code C): **Max. Rating, C Connections** 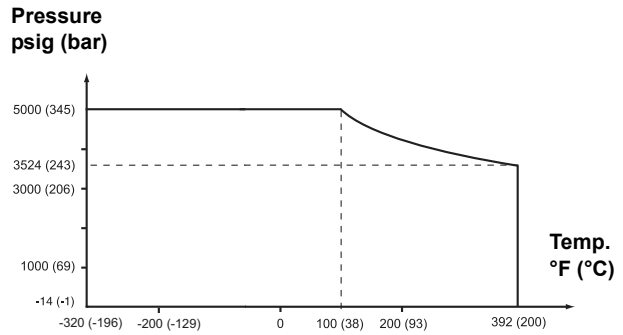
ASME / ANSI Flange Rating	316L SST flanges according to ASME B16.5 Table 2-2.3: • Standard: Max. 302 °F/580 psig (150 °C/40 Bar) • HP/C: Class 2500 up to max 200 °C • HTHP: Class 2500 up to max 400 °C
	Alloy C-276 (UNS N10276) flanges according to ASME B16.5 Table 2-3.8: • HP/C: Class 1500 up to max 200 °C • HTHP: Class 1500 up to max 400 °C
EN Flange Rating	1.4404 according to EN 1092-1 material group 13E0: • Standard: Max. 302 °F/580 psig (150 °C/40 Bar) • HP/C: PN 320 up to max 200 °C • HTHP: PN 320 up to max 400 °C
	Alloy C-276 (UNS N10276) flanges according to EN 1092-1 material group 12E0
Fisher & Masoneilan Flange Rating	316L SST according to ASME B16.5 Table 2-2.3: • Standard: Max. 302 °F/580 psig (150 °C/40 Bar) • HP/C: Class 600 up to max 200 °C • HTHP: Class 600 up to max 400 °C
JIS Flange Rating	316L SST according to JIS B2220 material group 2.3: • Standard: Max. 302 °F/580 psig (150 °C/40 Bar) • HP/C: Max temp. 200 °C. Final rating depends on flange. • HTHP: Max temp. 400 °C. Final rating depends on flange.
Tri-Clamp Rating	Maximum pressure is 16 bar for 1.5 in. (37.5 mm) and 2 in. (50 mm) housing; and 10 bar for 3 in. (75 mm) and 4 in. (100 mm) housing. The final rating depends on the clamp and gasket. Tri-Clamp is available for the Standard Temperature and Pressure seal.
Plate Design	Certain models of flanged Alloy and PTFE covered probes have a tank connection design with a protective flange plate of the same material as the probe and with a backing flange in 316L / EN 1.4404. The protective flange plate prevents the backing flange from being exposed to the tank atmosphere. Flange rating according to SST backing flange ASME B16.5 Table 2-2.3, EN 1092-1 material group 13E0, and JIS B2220 material group 2.3.
	Alloy C-276 protective plate: • Standard: Max. 302 °F/580 psig (150 °C/40 Bar). Flange plate design is available up to Class 300/PN 40 • HP: Max temp. 200 °C. Flange plate design is available up to Class 600/PN 63 • HTHP: Max temp. 400 °C. Flange plate design is available up to Class 600/PN 63
	Alloy 400 protective plate: • Standard: Max. 302 °F/580 psig (150 °C/40 Bar). Flange plate design is available up to Class 300/PN 40
	PTFE protective plate: • Standard: Max. 302 °F/580 psig (150 °C/40 Bar)
Flange Connection Rating	See Table 5 and Table 6 for the conditions used for flange strength calculations

Interface Measurements

Considerations

The Rosemount 5302 is a good choice for measuring the interface of oil and water, or other liquids with significant dielectric differences. It is also possible to measure interfaces with a Rosemount 5301 in applications where the probe is fully submerged in the liquid. If interface is to be measured, follow these criteria:

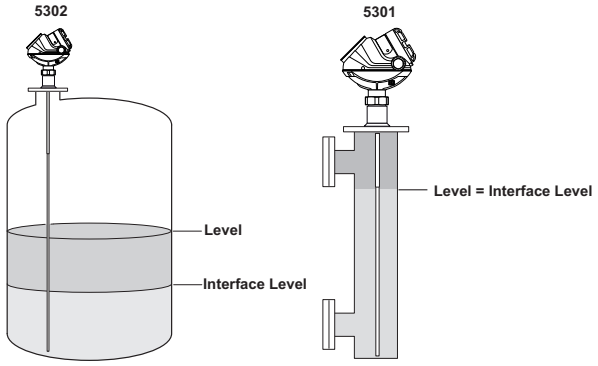

Interface Measurement with a Rosemount 5302 and a Rosemount 5301 (fully submerged probe)

- The dielectric constant of the upper product must be known and should not vary. The Radar Master software has a built-in dielectric constant calculator to help the user estimate the upper product dielectric constant
- The dielectric constant of the upper product must have a smaller dielectric constant than the lower product
- The difference between the dielectric constants for the two products must be larger than 6
- The maximum dielectric constant for the upper product is 8 for the single lead probes, 10 for the coaxial, and 7 for the twin lead probes
- The upper product thickness must be larger than 5.1 in. (0.13 m) for all probes, except the HTHP coaxial probe, which requires 8 in. (0.2 m) to distinguish echoes from the two liquids
- Sometimes there is an emulsion layer (mix of the products) between the two products which can affect interface measurements. For guidelines on emulsion situations, consult your local Emerson Process Management representative

For information on the maximum allowable product thickness and measuring range, see “Interface Measuring Range” on page 29.

Solids Measurements

Considerations

Rosemount 5303 with a flexible single lead probe is a good choice for measuring solids, such as powders, granulates, or pellets with a grain size of up to 0.8 in. (20 mm). The measurement is made where the probe comes in contact with the material, which means that the shape of the material surface is not critical for the measurement. Measurements are also independent of moisture and material fluctuations such as density and temperature.

The following should be kept in mind:

- In solid applications, media may cause down-pull forces on silo roofs. The silo roof must be able to withstand the probe collapse load, or at least the maximum probe tensile load
- The tensile load depends on the silo size, material density, and the friction coefficient. Forces increase with the buried length, the silo, and probe diameter. In critical cases, such as products with a risk of build-up, probe for high physical weight loads are available
- Forces on probes, depending on their position, are generally two to ten times greater on probes with a tie-down than on probes with ballast weights
- For environments where electrostatic discharges (plastics) are likely to occur, grounding of the probe and vessel may be required

Note:

Abrasive media can wear out the probe, so consider using non-contacting radar.

For more information, refer to the Guided Wave Radar in Solid Level Applications Technical Note (Document No. 00840-2300-4811).

High Pressure Steam Applications	
Considerations	Saturated steam under high pressure can influence radar level transmitter measurements. Rosemount 5301 with Dynamic Vapor Compensation (DVC) will automatically compensate for this and maintain the level accuracy. Considerations for DVC: • A Single lead rigid HTHP probe with a reference reflector for vapor compensation must be used (probe type 4U, 4V) • Mount in a 2, 3, or 4-in bypass chamber with flanges appropriately sized for the pressure and temperature of the application • Use a centering disk to keep the probe centered in the chamber see “Chamber / Pipe Installations” on page 34 • Probes up to 13.1 ft (4 m) in length are supported • Minimum measuring range is 12 in. (300 mm) • DVC requires a minimum distance from the flange to the surface level in order to measure the change in the vapor dielectric constant. If the level rises within this area, the unit switches over to static compensation, using the last known vapor dielectric constant For more information, refer to the High Pressure Steam Applications Technical Note (Document No. 00840-0100-4530)

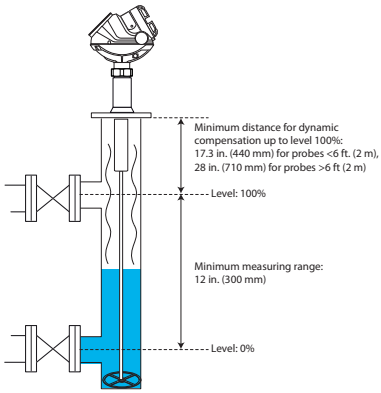

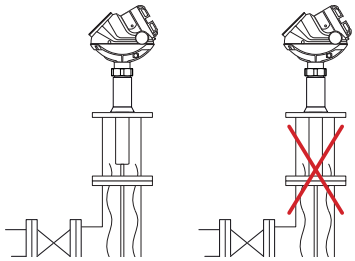

If a spool piece is used, it is important that the reference reflector is not positioned where the spool piece connects to the chamber.

(1) Reverse polarity protection.
(2) Final rating may be lower depending on flange and O-ring selection, See “Tank Connection and Probe” on page 31.

TABLE 4. Temperature ranges for standard tank seals with different O-ring materials

Tank seal with different O-ring material	Min. Temperature °F (°C) in air	Max. Temperature °F (°C) in air
Viton®	5 (-15)	302 (150)
Ethylene Propylene (EPDM)	-40 (-40)	266 (130)
Kalrez® 6375	14 (-10)	302 (150)
Buna-N	-31 (-35)	230 (110)

NOTE!
Always check the chemical compatibility of the o-ring material with your application

TABLE 5. 316L SST: conditions used for flange strength calculations

	Bolting material	Gasket		Flange material	Hub material
		Standard/HTHP	HP/HTHP/C		
ASME / ANSI	Stainless steel SA193 B8M C1.2	Soft (1a) with min. thickness 1.6 mm.	Spiral wound gasket with nonmetallic filler (1b)	Stainless steel A182 Gr. F316L and EN 10222-5-1.4404.	Stainless steel A479M 316L, and EN 10272-1.4404.
EN, JIS	EN 1515-1/-2 group 13E0, A4-70.	Soft (EN 1514-1) with min. thickness 1.6 mm.	Spiral wound gasket with nonmetallic filler (EN 1514-2)		

TABLE 6. Alloy C-276: conditions used for flange strength calculations

	Bolting material	Gasket		Flange material	Hub material
		HP/HTHP/C			
ASME / ANSI	UNS N10276	Soft (1a) with min. Thickness 1.6 mm	Spiral wound gasket with nonmetallic filler (1b)	SB462 Gr. N10276 (solution annealed condition) or SB575 Gr. N10276 (solution annealed condition)	SB574 Gr. N10276
EN, JIS		Soft (EN 1514-1) with min. Thickness 1.6 mm	Spiral wound gasket with nonmetallic filler (EN 1514-2)		

Maximum Upper Product Thickness for the Flexible Single Lead Probe in ft (m)

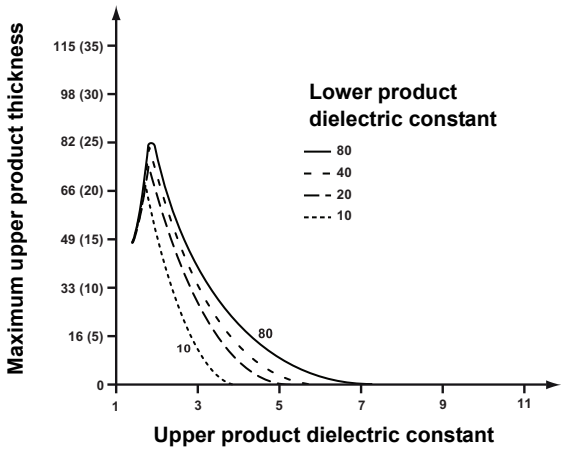

Maximum Upper Product Thickness for the Flexible Twin Lead Probe in ft (m)

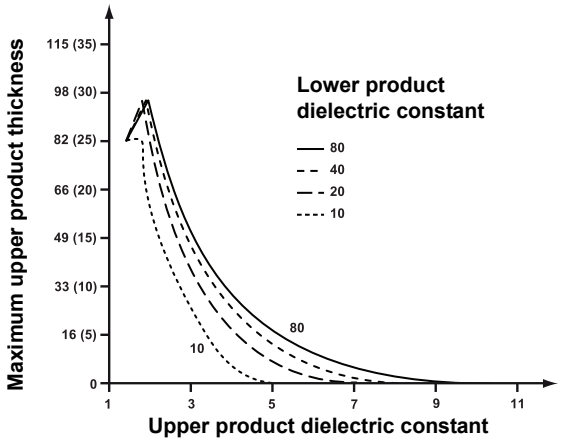

Performance Specification

General	
Reference Conditions	Single standard probe, 77 °F (25 °C) in water and ambient pressure
Reference Accuracy	± 0.12 in. (3 mm) or 0.03% of measured distance, whichever is greatest(1)
Repeatability	± 0.04 in. (1 mm)
Ambient Temperature Effect	± 0.008 in. (0.2 mm) /°K or ± 30 ppm/°K of measured value, whichever is greatest
Update Interval	< 1 per second
Measuring Range	
Transition Zones	Transition zones are areas where measurements are non-linear or have reduced accuracy. See picture and Table 7 on page 29 If measurements are desired at the very top of the tank, it is possible to mechanically extend the nozzle and use the coaxial probe. Then the upper transition zone is moved into the extension. **NOTE** The 4-20 mA set points are recommended to be configured between the transition zones, within the measuring range

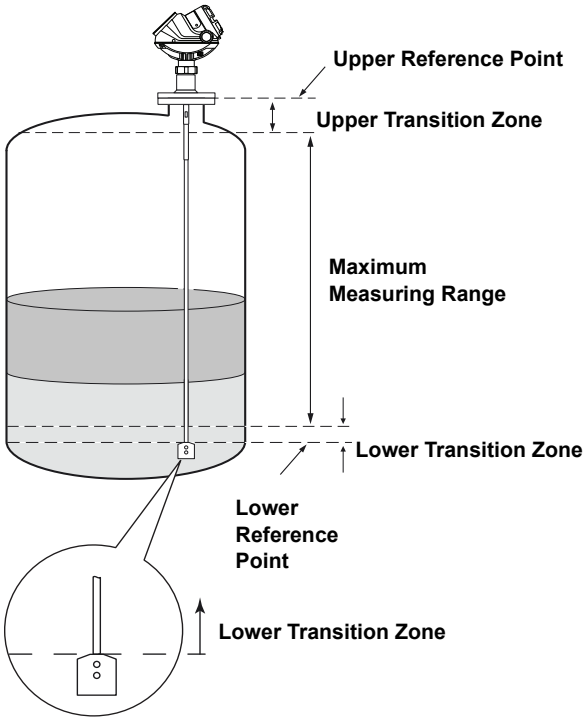

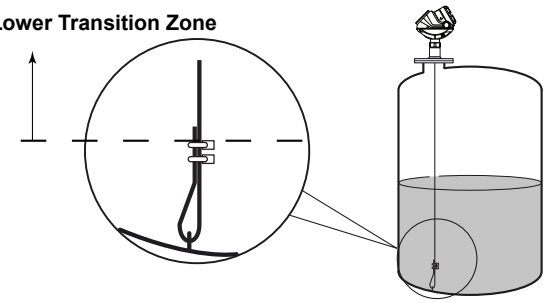

For a flexible single lead probe with chuck, the lower transition zone is measured upwards from the upper clamp.

Measuring Range and Minimum Dielectric Constant	16 in. (0.4 m) to 164 ft (50 m)
	See Table 8 on page 30 for each probe's measuring range and minimum dielectric constant. Due to the measuring range depending on the application and factors described below, the values are a guideline for clean liquids. For more information, ask your local Emerson Process Management representative
	Different parameters (factors) affect the echo and therefore the maximum measuring range differs depending on application according to: • Disturbing objects close to the probe • Media with higher dielectric constant (ε_r) gives better reflection and allows a longer measuring range • Surface foam and particles in the tank atmosphere may affect measuring performance • Heavy coating or contamination on the probe should be avoided since it can reduce measuring range and might cause erroneous level readings
	Note: For Remote Housing, see Table 9 on page 30 for the maximum recommended measuring range for different Remote Housing lengths, installation types, Dielectric Constants, and probe types
Interface Measuring Range	Target applications include interfaces between oil / oil-like and water / water-like liquids with low (<3) upper product dielectric constant and high (>20) lower product dielectric constant. For such applications, the maximum measuring range is only limited by the length of the rigid single lead, coaxial, and rigid twin probes.
	For the flexible probes, the maximum measuring range will be reduced based on the maximum upper product thickness according to the diagram below. The maximum interface distance is 164 ft (50 m) minus the maximum product thickness.
	For information on the maximum allowable product thickness and measuring range, see graphs on page 27
Environment	
Vibration Resistance	Aluminum housing: IEC 60770-1 Level 1. Stainless Steel housing: IACS E10
Electromagnetic Compatibility	Emission and Immunity: EMC directive 89/336/EEC. EN61326-1:1997 incl. A1:1998 and A2:2001. NAMUR recommendations NE21
Built-in Lightning Protection	EN61326, IEC 801-5, level 1 kV. T1 option: the transmitter complies with IEEE 587 Category B transient protection and IEEE 472 surge protection
Coating (See Table 10 on page 30)	• Single lead probes are preferred when there is a risk of contamination (because coating can result in the product bridging across the two leads for twin versions; between the inner lead and outer pipe for the coaxial probe) • For viscous or sticky applications, PTFE probes are recommended. Periodic cleaning may also be required • Signal Quality Metrics (option code D01, or DA1) can be used in determining when to clean the probe Transmitters equipped with the Diagnostics Suite option can calculate Signal Quality Metrics • Maximum error due to coating is 1-10% depending on probe type, dielectric constant, coating thickness and coating height above product surface
CE-mark	Complies with applicable directives (EMC, ATEX)

(1) For probes with spacers, the accuracy may deviate close to the spacers. Accuracy may be affected by remote housing.

TABLE 7. Transition Zones

	Dielectric Constant	Rigid Single Lead	Flexible Single Lead	Coaxial	Rigid Twin Lead	Flexible Twin Lead
Upper(1) Transition Zone	**80**	4.3 in. (11 cm)	4.3 in. (11 cm)	4.3 in. (11 cm)	4.3 in. (11 cm)	4.7 in. (12 cm)
	2	6.3 in. (16 cm)	7.1 in. (18 cm)	4.3 in. (11 cm)	5.5 in. (14 cm)	5.5 in. (14 cm)
Lower(2) Transition Zone	**80**	2 in. (5 cm)	0 in. (0 cm)(4) (3)	0.4 in. (1 cm)	1.2 in. (3 cm)	2 in. (5 cm)(4)
	2	2.8 in. (7 cm)(5)	2 in. (5 cm) - long weight(4) 3.2 in. (8 cm) - short weight(4)	2 in. (5 cm)	4 in. (10 cm)	5.5 in. (14 cm)(4)
	Note: The 4–20 mA set points are recommended to be configured between the transition zones, within the measuring range.					

(1) The distance from the upper reference point where measurements have reduced accuracy.
(2) The distance from the lower reference point where measurements have reduced accuracy.
(3) The measuring range for the PTFE covered Flexible Single Lead probe includes the weight. For low dielectric media, special configuration may be required.
(4) Note that the weight length or chuck fastening length adds to non-measurable area and is not included in the diagram. See "Dimensional Drawings" on page 39.
(5) When using a metallic centering disc, the lower transition zone is 8 in. (20 cm), including weight if applicable. When using a PTFE centering disc, the lower transition zone is not affected.

TABLE 8. Measuring Range and Minimum Dielectric Constant

Rigid Single Lead	Flexible Single Lead[1]	Coaxial	Rigid Twin Lead	Flexible Twin Lead
Maximum Measuring Range				
9 ft. 10 in. (3 m) for 8 mm probes. 14 ft. 9 in. (4.5 m) for 13 mm probes	164 ft (50 m)	19 ft 8 in. (6 m)	9 ft 10 in. (3 m)	164 ft (50 m)
Minimum Dielectric Constant				
1.4 (Std) (1.25 if installed in a metallic bypass or stilling well)[1] [2] 1.6 (HP/HTHP/C) (1.4 if installed in a metallic bypass or stilling well)[1] [2]	1.4 (Std), up to 49 ft (15 m)[1] 1.6 (HP/HTHP/C), up to 49 ft (15 m)[1] (Std/HP/HTHP/C) 1.8, up to 82 ft (25 m)[1] 2.0, up to 115 ft (35 m)[1] 3, up to 138 ft (42 m) 4, up to 151 ft (46 m) 6, up to 164 ft (50 m)	1.2 (Std) 1.4 (HP/C) 2.0 (HTHP)	1.4 (Std)	(Std) 1.4, up to 82 ft (25 m)[1] 2.0, up to 115 ft (35 m)[1] 2.5, up to 131 ft (40 m)[1] 3.5, up to 148 ft (45 m) 6, up to 164 ft (50 m)

(1) Probe end projection software function will improve the minimum measurable dielectric constant. Consult the factory for details.
(2) May be lower depending on installation.

TABLE 9. Remote Housing Measuring Range

		Dielectric Constant	Rigid Single 8 mm	Rigid Single 13 mm	Flexible Single	Coaxial	Rigid Twin	Flexible Twin
1 m Remote Housing	Chamber / pipe installations ≤ 4 in. (100 mm)	1.4 2 80	4 ft (1.25 m) 10 ft (3 m)[1] 10 ft (3 m)	15 ft (4.5 m)[1] 15 ft (4.5 m)[1] 15 ft (4.5 m)[1]	33 ft (10 m)[1] [2] 33 ft (10 m)[1] [2] 33 ft (10 m)[1] [2]	19 ft (6 m)	10 ft (3 m)[1] 10 ft (3 m)[1] 10 ft (3 m)[1]	33 ft (10 m)[1] [2] 33 ft (10 m)[1] [2] 33 ft (10 m)[1] [2]
	Tank installations	1.4 2 80	4 ft (1.25 m) 4 ft (1.25 m) 10 ft (3 m)[1]	4 ft (1.25 m) 4 ft (1.25 m) 10 ft (3 m)[1]	4 ft (1.25 m) 4 ft (1.25 m) 159 ft (48.5 m)[1]		4 ft (1.25 m) 4 ft (1.25 m) 10 ft (3 m)[1]	4 ft (1.25 m) 98 ft (30 m)[1] 159 ft (48.5 m)[1]
2 m Remote Housing	Chamber / pipe installations ≤ 4 in. (100 mm)	1.4 2 80	9 ft (2.75 m) 10 ft (3 m)[1] 10 ft (3 m)	15 ft (4.5 m)[1] 15 ft (4.5 m)[1] 15 ft (4.5 m)	33 ft (10 m)[1] [2] 33 ft (10 m)[1] [2] 33 ft (10 m)[1] [2]	19 ft (6 m)	10 ft (3 m)[1] 10 ft (3 m)[1] 10 ft (3 m)[1]	33 ft (10 m)[1] [2] 33 ft (10 m)[1] [2] 33 ft (10 m)[1] [2]
	Tank installations	1.4 2 80	9 ft (2.75 m) 9 ft (2.75 m) 10 ft (3 m)[1]	9 ft (2.75 m) 9 ft (2.75 m) 10 ft (3 m)[1]	9 ft (2.75 m) 9 ft (2.75 m) 154 ft (47 m)[1]		9 ft (2.75 m) 9 ft (2.75 m) 10 ft (3 m)[1]	9 ft (2.75 m) 98 ft (30 m)[1] 154 ft (47 m)[1]
3 m Remote Housing	Chamber / pipe installations ≤ 4 in. (100 mm)	1.4 2 80	10 ft (3 m)	15 ft (4.5 m) 15 ft (4.5 m) 15 ft (4.5 m)	33 ft (10 m)[1] [2] 33 ft (10 m)[1] [2] 33 ft (10 m)[1] [2]	19 ft (6 m)	10 ft (3 m)[1]	33 ft (10 m)[1] [2] 33 ft (10 m)[1] [2] 33 ft (10 m)[1] [2]
	Tank installations	1.4 2 80		14 ft (4.25 m) 14 ft (4.25 m) 15 ft (4.5 m)[1]	14 ft (4.25 m) 14 ft (4.25 m) 149 ft (45.5 m)[1]			14 ft (4.25 m) 98 ft (30 m)[1] 149 ft (45.5 m)[1]

(1) Accuracy may be affected up to ± 1.2 in. (30 mm).
(2) Required chamber/pipe size is 3 or 4 in. (75 -100 mm).

TABLE 10. Maximum recommended Viscosity and Coating / Build-up

Coaxial	Twin Lead	Single Lead
Maximum Viscosity		
500 cP	1500 cP	8000 cP [1] [2]
Coating / Build-up		
Coating not recommended	Thin coating allowed, but no bridging	Coating allowed

(1) Consult your local Emerson Process Management representative in the case of agitation/turbulence and high viscous products.
(2) Be cautious in HTHP viscous or crystallizing media applications where temperature at instrument connection is significantly lower than process temperature with risk of coating in the upper part of probe that may reduce the measurement signal. Consider using HP or STD probes in such applications.

Physical Specification

Housing and Enclosure	
Type	Dual compartment (terminal compartment and the electronics are completely separated). Two entries for conduit or cable connections. The transmitter housing can be rotated in any direction
Electrical Connection	½ - 14 NPT for cable glands or conduit entries. Optional: M20 x 1.5 conduit / cable adapter, M12 4-pin male eurofast® connector or A size Mini 4-pin male minifast® connector. Recommended output cabling is twisted shielded pairs, 18-12 AWG
Housing Material	Polyurethane-covered Aluminum, or Stainless Steel Grade CF8M (ASTM A743)
Ingress Protection	NEMA 4X, IP 66, IP67
Factory Sealed	Yes
Weight	Transmitter Head (TH): Aluminium 4.4 lb (2 kg), SST 10.8 lb (4.9 kg).
Remote Housing Mounting	Kit that includes a flexible armored extension cable and a bracket for wall or pipe mounting. See “Remote Housing” on page 50 for the dimensions. 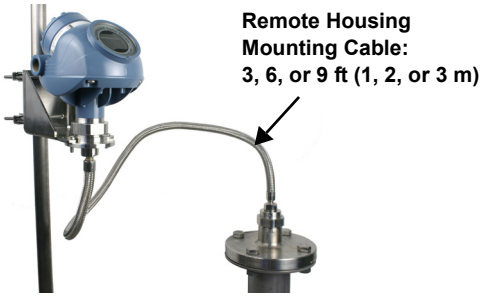 **Remote Housing Mounting Cable: 3, 6, or 9 ft (1, 2, or 3 m)**
Tank Connection and Probe	
Tank Connection	The tank connection consists of a tank seal, a flange, Tri-Clamp, or NPT or BSP/G threads. Certain models of flanged Alloy and PTFE covered probes have a tank connection design with a protective plate of the same material as the probe. This is to prevent the 316L / EN 1.4404 SST flange from being exposed to the tank atmosphere. See “Dimensional Drawings” on page 39. 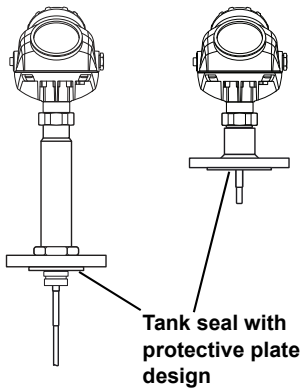 **Tank seal with protective plate design**
Flange Dimensions	Follows ASME B 16.5, JIS B2220, and EN 1092-1 standards for blind flanges. For Proprietary Fisher® and Masoneilan® flanges, see “Special Flanges and Flushing Connection Rings” on page 51
Vented Flanges	Available with Masoneilan and Fisher vented flanges. Vented flanges must be ordered as accessories with a 1½-in. NPT threaded process connection (code RA); see “Special Flanges and Flushing Connection Rings” on page 51. As an alternative to a vented flange, it is possible to use a flushing connection ring on top of the standard nozzle.
Probe Versions	Coaxial, Rigid Twin and Rigid Single Lead, Flexible Twin and Flexible Single Lead. Probes can be ordered in different materials and options for extreme temperatures and pressure
	For guidelines on which probe to select depending on application, see the Technical Note Guided Wave Radar Application Guidelines (Document No. 00840-2600-4811)

Material Exposed To Tank Atmosphere	Standard Probe (Operating Temperature and Pressure code S): • Material model code 1: 316L SST (EN 1.4404), PTFE, PFA, and O-ring materials • Material model code 2: Alloy C-276 (UNS N10276), PTFE, PFA, and O-ring materials • Material model code 3: Alloy 400 (UNS N04400), PTFE, PFA, and O-ring materials • Material model code 7: PTFE • Material model code 8: PTFE, 316 L SST (EN 1.4404), and O-ring materials
	HTHP Probe (Operating Temperature and Pressure code H): • Material model code 1: 316L SST (EN 1.4404), Ceramic (Al2O3), Graphite, and Inconel • Material model code 2 and H: Alloy C-276 (UNS N10276), Ceramic (Al2O3), Graphite, Inconel
	HP Probe (Operating Temperature and Pressure code P): • Material model code 1: 316L SST (EN 1.4404), Ceramic (Al2O3), Graphite, PFA, PTFE, Inconel • Material model codes 2, H: Alloy C-276 (UNS N10276), Ceramic (Al2O3), Graphite, PFA, PTFE, Inconel
	Cryogenic Probe (Operating Temperature and Pressure code C): • Material model code 1: 316L SST (EN 1.4404), Ceramic (Al2O3), Graphite, PFA, PTFE, Inconel
Pressure Equipment Directive (PED)	Complies with 97/23/EC article 3.3
Total Probe Length	This is defined from the upper reference point to the end of the probe (weight included, if applicable). 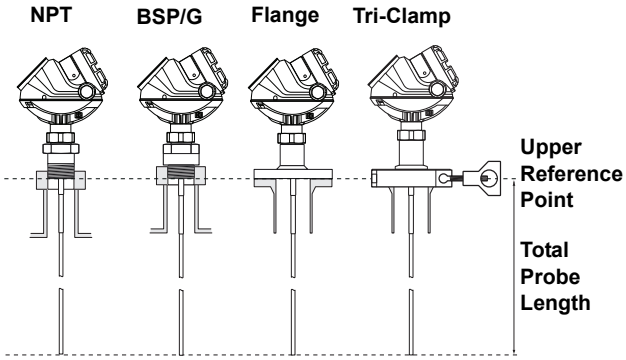 Select the probe length according to the required measuring range (the probe must be hung and fully extended through the entire distance where level readings are desired). Most of the probes can be cut in field. However, there are some restrictions for the standard and HP/C coaxial probes: these can be cut up to 2 ft. (0.6 m). Probes shorter than 4.1 ft. (1.25 m) can be cut to the minimum length of 1.3 ft. (0.4 m). The HTHP coaxial probe and the PTFE covered probes cannot be cut in the field.
Minimum and Maximum Probe Length	Coaxial: 1.3 ft (0.4 m) to 19.7 ft (6 m). Rigid Twin Lead: 1.3 ft (0.4 m) to 9.8 ft (3 m). Flexible Twin Lead: 3.3 ft (1 m) to 164 ft (50 m). Rigid Single Lead (0.3 in./8 mm): 1.3 ft (0.4 m) to 9.8 ft (3 m) Rigid Single Lead (0.5 in./13 mm): 1.3 ft (0.4 m) to 14.8 ft (4.5 m) Flexible Single Lead: 3.3 ft (1 m) to 164 ft (50 m)
Probe Angle	0 to 90 degrees from vertical axis
Tensile Strength	0.16 in. (4 mm) Flexible Single Lead probe: 2698 lb (12 kN) 0.24 in. (6 mm) Flexible Single Lead probe: 6519 lb (29 kN) Flexible Twin Lead probe: 2023 lb (9 kN)
Collapse Load	0.16 in. (4 mm) Flexible Single Lead probe: 3597 lb (16 kN) 0.24 in. (6 mm) Flexible Single Lead probe: 7868 lb (35 kN)
Sideway Capacity	Coaxial probe: 73.7 ft. lbf, 3.7 lb at 19.7 ft. (100 Nm, 1.67 kg at 6 m) Rigid Twin Lead: 2.2 ft. lbf, 0.22 lb at 9.8 ft. (3 Nm, 0.1 kg at 3 m) Rigid Single Lead: 4.4 ft. lbf, 0.44 lb at 9.8 ft. (6 Nm, 0.2 kg at 3 m)
Maximum Recommended Nozzle Height	4 in. (10 cm) + nozzle diameter For coaxial probes, there are no restrictions

Minimum Clearance
(See Table 11 on page 35)

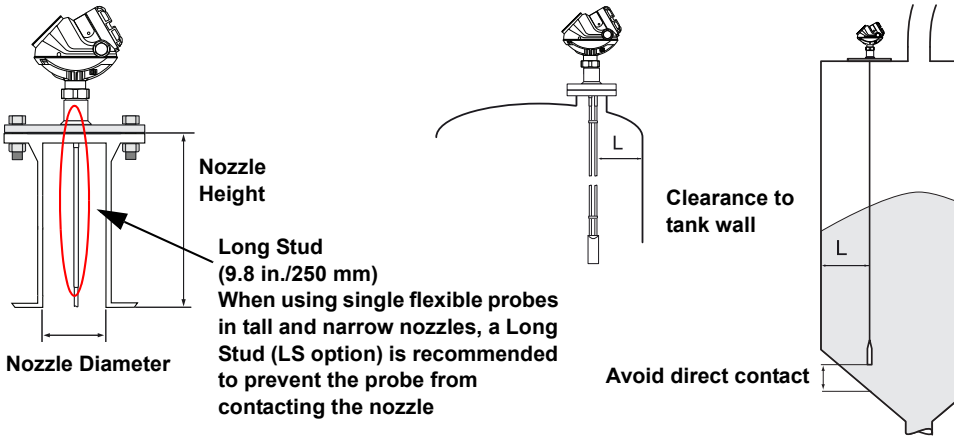

Other Mechanical Considerations

To get best possible performance, the following must be considered before installing the transmitter:

- Inlets should be kept at a distance in order to avoid product filling on the probe
- Avoid physical contact between probes and agitators, as well as applications with strong fluid movement unless the probe is anchored
- Probe tie-down is recommended if the probe can move to within 1 ft. (30 cm) of any object during operations
- In order to stabilize the probe for side forces, it is possible to fix or guide the probe to the tank bottom
- For optimal single lead probe performance in non-metallic vessels, the probe must either be mounted with a 2-in. / DN 50 or larger metallic flange, or a metal sheet with an 8-in. diameter (200 mm) or larger must be used (see the Reference Manual for placement)

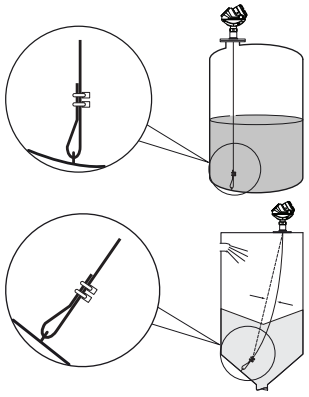

Flexible single lead probe with chuck installed in liquids and in solids. For solids, it is recommended that the probe should be slack to prevent high tensile loads.

See the Reference Manual (Document No. 00809-0100-4530) for more mechanical installation information

Weight

Flange: depends on flange size
Coaxial probe: 0.67 lb/ft (1 kg/m)
Rigid Single Lead probe (0.3 in./8 mm): 0.27 lb/ft (0.4 kg/m)
Rigid Single Lead probe (0.5 in./13 mm): 0.71 lb/ft (1.06 kg/m)
Rigid Twin Lead probe: 0.40 lb/ft (0.6 kg/m)
Flexible Single Lead probe: 0.05 lb/ft (0.08 kg/m)
Flexible Twin Lead probe: 0.09 lb/ft (0.14 kg/m)
End weight: 0.88 lb (0.40 kg) for the 4 mm single lead probe, 1.2 lb (0.55 kg) for the 6 mm single lead probe and 1.3 lb (0.60 kg) for twin lead probes

Chamber / Pipe Installations

Rosemount 9901 Chamber

Rosemount 9901 allows external mounting of process level instrumentation. It supports a variety of process connections, and optional drain and vent connections. The Rosemount 9901 chamber is designed to the ASME B31.3 standard, and is Pressure Equipment Directive (PED) compliant. Use option code XC to order together with the 5300 Series transmitters.

The probe length to use for a Rosemount 9901 chamber can be calculated with this formula (only valid for standard 9901 chambers):
Side-and-Side dimension:
Probe length=Centre-to-Centre dimension+19 in. (48 cm)
Side-and-Bottom dimension:
Probe length=Centre-to-Centre dimension+4 in. (10 cm)

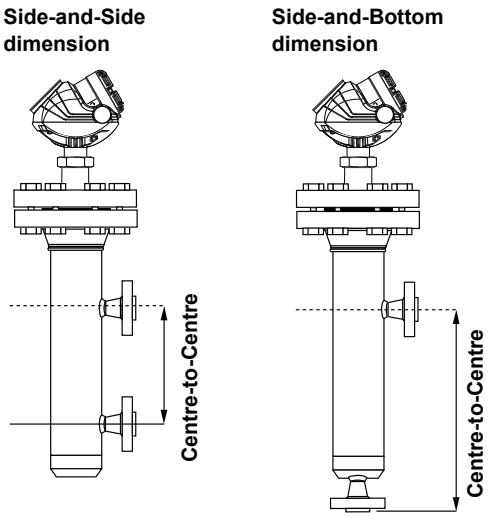

Use a centering disc the same diameter as the chamber if the probe length >3.3 ft (1 m). See “Probe Type in Chamber Considerations” on page 34 and “Centering Discs” on page 35 for which probe and disc to use

For additional information, see the Rosemount 9901 Chamber for Process Level Instrumentation Product Data Sheet (Document Number 00813-0100-4601)

Existing Chamber

A Rosemount 5300 Series transmitter is the perfect replacement in an existing displacer chamber. Proprietary flanges are offered, enabling use of existing chambers to make installation easy.
Considerations when changing to 5300:
The 5300 series flange choice and probe length must be correctly matched to the chamber. Both standard ANSI and EN (DIN), as well as proprietary chamber flanges, are available. See “Special Flanges and Flushing Connection Rings” on page 51 to identify the proprietary flanges.

See “Probe Type in Chamber Considerations” on page 34 and “Centering Discs” on page 35 for which probe and disc to use. See Table 12 on page 35 for guidelines on the required probe length

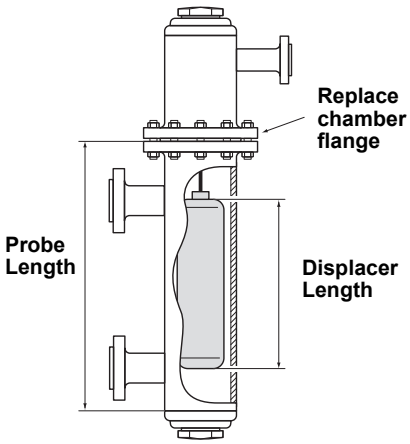

For additional information, see the Replacing Displacers with Guided Wave Radar Technical Note (Document Number 00840-2200-4811)

Probe Type in Chamber Considerations

When installing a Rosemount 5300 in a chamber, the single lead probe is recommended. An exception is with liquefied gas > 40 bar where the coaxial probe is recommended.

The recommended minimum chamber diameter is 4 in. (100 mm) for Single Flexible probe and 3 in. (75 mm) for the Single Rigid probe. The probe should be centered to prevent it touching the sides of the well.

The probe length determines if a Single Rigid or Single Flexible probe should be used:

- Less than 20 ft (6 m):
  Rigid Single Probe is recommended. Use a centering disc for probe > 3.3 ft (1 m). If installation requires less head-space, use a Flexible Single Probe with a weight and centering disc.
- More than 20 ft (6 m):
  Use Flexible Single Probe with a weight and centering disc.

A short weight is available for the single flexible SST probe. It is used for measuring close to the probe end and shall be used where the measuring range must be maximized. The height is 2 in. (50 mm) and the diameter is 1.5 in. (37.5 mm). The option code is W2.

Centering Discs	To prevent the probe from contacting the chamber or pipe wall, centering discs are available for rigid single, flexible single, and flexible twin lead probes. The disc is attached to the end of the probe. Discs are made of stainless steel, Alloy C-276, Alloy 400, or PTFE. The centering disc in PTFE is not available for HTHP probes. See Table 13 for Dimension D. Table 14 shows which centering disc diameter to choose for a particular pipe.	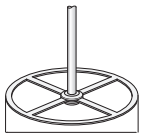 D

TABLE 11. Minimum Clearance

	Rigid Single Lead	Flexible Single Lead	Coaxial	Rigid Twin Lead	Flexible Twin Lead
Recommended nozzle diameter	6 in. (15 cm) or more	6 in. (15 cm) or more	Enough space to fit the probe	4 in. (10 cm) or more	4 in. (10 cm) or more
Min. nozzle diameter (1)	2 in. (5 cm)	2 in. (5 cm)	Enough space to fit the probe	2 in. (5 cm)	2 in. (5 cm)
Min. clearance to tank wall (L) or obstruction(2)	4 in. (10 cm) if smooth metallic wall. 20 in. (50 cm) if disturbing objects, rugged metallic or concrete/plastic wall.	4 in. (10 cm) if smooth metallic wall. 20 in. (50 cm) if disturbing objects, rugged metallic or concrete/plastic wall.	0 in. (0 cm)	4 in. (10 cm)	4 in. (10 cm)
Min. chamber/still pipe diameter	2 in. (5 cm) (3)	Consult the factory	1.5 in. (3.8 cm)	2 in. (5 cm) (4)	Consult the factory

(1) Requires special configuration and setting of Upper Null Zone and may affect the maximum measuring range.
(2) Minimum clearance from tank bottom for the coaxial and rigid single probes is 0.2 in. (5 mm).
(3) The probe must be centered in the pipe/bypass. A centering disc (see "Centering Discs" on page 35 and "Ordering Information" on page 4) can be used to prevent the probe from contacting the chamber wall.
(4) The centermost lead must be at least 0.6 in. (15 mm) away from the pipe/bypass wall.

TABLE 12. Required probe length in chambers

Chamber Manufacturer	Probe Length(1)
Major torque-tube manufacture (249B, 249C, 2449K, 249N, 259B)	Displacer+9 in. (229 mm)
Masoneilan (Torque tube operated), proprietary flange	Displacer+8 in. (203 mm)
Other - torque tube(2)	Displacer+8 in. (203 mm)
Magnetrol (spring operated)(3)	Displacer+between 7.8 in. (195 mm) to 15 in. (383 mm)
Others - spring operated(2)	Displacer+19.7 in. (500 mm)

(1) If flushing ring is used, add 1 in. (25 mm).
(2) For other manufacturers, there are small variations. This is an approximate value, actual length should be verified.
(3) Lengths vary depending on model, SG and rating, and should be verified.

TABLE 13. Centering Disc Dimensions

Disc Size	Actual Disc Diameter
2 in.	1.8 in. (45 mm)
3 in.	2.7 in. (68 mm)
4 in.	3.6 in. (92 mm)
6 in.	5.55 in. (141 mm)
8 in.	7.40 in. (188 mm)

TABLE 14. Centering disc size recommendation for different pipe schedules

	Pipe Schedule					
Pipe Size	5s,5	10s,10	40s,40	80s,80	120	160
2 in.	2 in.	2 in.	2 in.	2 in.	NA(1)	NA(2)
3 in.	3 in.	3 in.	3 in.	3 in.	NA(1)	2 in.
4 in.	4 in.	4 in.	4 in.	4 in.	4 in.	3 in.
5 in.	4 in.	4 in.	4 in.	4 in.	4 in.	4 in.
6 in.	6 in.	6 in.	6 in.	6 in.	4 in.	4 in.
7 in.	NA(1)	NA(1)	5 in.	6 in.	NA(1)	NA(1)
8 in.	8 in.	8 in.	8 in.	8 in.	6 in.	6 in.

(1) Schedule is not available for pipe size.
(2) No centering disc is available.

Product Certifications

SAFETY NOTE

A safety isolator such as a zener barrier is always needed for intrinsic safety.

Probes covered with plastic and/or with plastic discs may generate an ignition-capable level of electrostatic charge under certain extreme conditions. Therefore, when the probe is used in a potentially explosive atmosphere, appropriate measures must be taken to prevent electrostatic discharge.

Factory Mutual (FM) Approval

FM APPROVED

Project ID: 3020497

E5 Explosion-proof for Class I, Div. 1,
Groups B, C, and D;
Dust Ignition Proof for Class II/III, Div. 1, Groups E, F, and G;
With Intrinsically Safe connections to
Class I, II, III, Div. 1, Groups B, C, D, E, F, and G.
Temp. Code T4
Ambient temperature limits: -50 °C to +70 °C(3).
Seal not required.
Approval valid for HART, FOUNDATION fieldbus, and Modbus options.

I5, IE Intrinsically Safe for Class I, II, III, Div. 1, Groups A, B, C, D, E, F, and G,
Class I, Zone 0, AEx ia IIC T4 when installed per Control Drawing: 9240 030-936.
Non-Incendive Class I, II, Div. 2, Groups A, B, C, D, F, and G;
Suitable for Class III, Div. 2.
4-20 mA / HART model: U_i=30 Vdc, I_i=130 mA, P_i=1.0 W, C_i=7.26 nF, L_i=0 H.
FOUNDATION fieldbus model: U_i=30 Vdc, I_i=300 mA, P_i=1.3 W, C_i=0 nF, L_i=0 H.
FISCO model: U_i=17.5 Vdc, I_i=380 mA, P_i=5.32 W, L_i=C_i=0.
Temp. Code T4
Ambient temperature limits: -50 °C to +70 °C(3)
Approval valid for HART, FOUNDATION fieldbus, and FISCO options.

EU Conformity

The most recent revision of the EC declaration of conformity can be found at www.rosemount.com.

Safety Instrumented Systems (SIS)

The Rosemount 5300 Series has been evaluated by a third party, Exida, against hardware requirements according to IEC 61508. With a FMEDA (Failure Modes, Effects and Diagnostics Analysis) report with a Safe Failure Fraction (SFF) above 90%, 5300 is suitable in SIS according to the Prior Use methodology. For more information, go to: http://www.emersonprocess.com/rosemount/safety/. To order the certificate of FMEDA data use option code QS.

ATEX Approval CE

Nemko 04ATEX1073X

SPECIAL CONDITIONS FOR SAFE USE (X)

The intrinsically safe circuits do not withstand the 500 Vac test as specified in IEC 60079-11 clause 6.4.12.

Impact and friction hazards need to be considered according to EN 60079-0 clause 8.1.2 when the transmitter and part of antennas exposed to the exterior atmosphere of the tank is made with light metal alloys and of category II 1G EPL Ga.

The Ex ia version of model 5300 FISCO field device may be supplied by an [Ex ib] FISCO power supply when the power supply is certified with three separate safety current limiting devices and voltage limitation which meets the requirements for type Ex ia.

E1(1) Flameproof:

Ex II 1/2 G T4
II 1D T79°C(2).
Ex ia/db ia IIC T4 Ga/Gb (-40 °C≤T_a≤+70 °C(3))
Ex ta IIIC T79°C(2) (-40 °C≤T_a≤+70 °C(3))
U_m = 250 V.
Approval valid for HART, FOUNDATION fieldbus, and Modbus options.

I1(1), IA(1)Intrinsically Safe:

Ex II 1 G T4.
II 1/2 G T4
II 1 D T79°C(2)
Ex ia IIC T4 (-50 °C≤T_a≤+70 °C(3)).
Ex ia/ib IIC T4 Ga/Gb (-50 °C≤T_a≤+70 °C(3)).
Ex ta IIIC T79°C(2) (-50 °C≤T_a≤+70 °C(3)).
4-20 mA / HART model: U_i=30 Vdc, I_i=130 mA, P_i=1.0 W, C_i=7.26 nF, L_i=0 H.
FOUNDATION fieldbus model: U_i=30 Vdc, I_i=300 mA, P_i=1.5 W, C_i=0 nF, L_i=0 H.
FISCO model: U_i=17.5 Vdc, I_i=380 mA, P_i=5.32 W, C_i=0 nF, L_i<1 µH.
Installation Drawing: 9240 030-938
Approval valid for HART, FOUNDATION fieldbus, and FISCO options.

(1) Ordering Information Code for Product Certificates, see page 8 and page 13.
(2) +69 °C with FOUNDATION fieldbus or FISCO option.
(3) +60 °C with FOUNDATION fieldbus or FISCO option.

Canadian Standards Association (CSA) Approval

This product meets the Dual Seal Requirements of ANSI/ISA 12.27.01-2003.

Cert. no. 1514653

E6[1] Explosion-proof with internal Intrinsically Safe Circuits [Exia]
Class I, Div. 1, Groups B, C and D;
Temp Code T4.
Class II, Div. 1 and 2, Groups E, F and G;
Class III, Div. 1
Ambient temperature limits -50 °C to +70 °C[3]
Approval valid for HART, FOUNDATION fieldbus, and Modbus options.

I6, IF[1] Intrinsically Safe Exia:
Class I, Div. 1, Groups A, B, C, and D.
Temp Code T4.
4-20 mA / HART model: U_i=30 Vdc, I_i=130 mA, P_i=1.0 W, C_i=7.26 nF, L_i=0 H.
FOUNDATION fieldbus model: U_i=30 Vdc, I_i=300 mA, P_i=1.3 W, C_i=0 nF, L_i=0 H.
FISCO model: U_i=17.5 Vdc, I_i=380 mA, P_i=5.32 W, L_i=C_i=0.
Approval valid for HART, FOUNDATION fieldbus, and FISCO options.
Installation Drawing: 9240 030-937
Ambient temperature limits -50 °C to +70 °C[3]

IECEx Approval

IECEx NEM 06.0001X

SPECIAL CONDITIONS FOR SAFE USE (X)

The intrinsically safe circuits do not withstand the 500 Vac test as specified in IEC 60079-11 clause 6.4.12.

Impact and friction hazards need to be considered according to EN 60079-0 clause 8.1.2 when the transmitter and part of antennas exposed to the exterior atmosphere of the tank is made with light metal alloys and of category II 1G EPL Ga.

The Ex ia version of model 5300 FISCO field device may be supplied by an [Ex ib] FISCO power supply when the power supply is certified with three separate safety current limiting devices and voltage limitation which meets the requirements for type Ex ia.

E7[1] Flameproof:
Ex ia/db ia IIC T4 Ga/Gb (-40 °C ≤ T_a ≤ +70 °C[3])
Ex ta IIIC T79°C[2] (-40 °C ≤ T_a ≤ +70 °C[3])
U_m = 250 V.
Approval valid for HART, FOUNDATION fieldbus, and Modbus options.

I7[1], IG[1] Intrinsically Safe:
Ex ia IIC T4 (-50 °C≤T_a≤+70 °C[3]).
Ex ia/ib IIC T4 Ga/Gb (-50 °C≤T_a≤+70 °C[3]).
Ex ta IIIC T79°C[2] (-50 °C≤T_a≤+70 °C[3]).
4-20 mA / HART model: U_i=30 Vdc, I_i=130 mA, P_i=1.0 W, C_i=7.26 nF, L_i=0 H.
FOUNDATION fieldbus model: U_i=30 Vdc, I_i=300 mA, P_i=1.5 W, C_i=0 nF, L_i=0 H.
FISCO model: U_i=17.5 Vdc, I_i=380 mA, P_i=5.32 W, C_i=0 nF, L_i<1 µH.
Installation Drawing: 9240 030-938
Approval valid for HART, FOUNDATION fieldbus, and FISCO options.

(1) Ordering Information Code for Product Certificates, see page 8 and page 13.
(2) +69 °C with FOUNDATION fieldbus or FISCO option.
(3) +60 °C with FOUNDATION fieldbus or FISCO option.

National Supervision and Inspection Center for Explosion Protection and Safety of Instrumentation (NEPSI) Approvals

SPECIAL CONDITIONS FOR SAFE USE (X)

Refer to Certificates:
GYJ081080X for Ex ia II C T4 and GYJ081130X for Ex iad II C T4.

E3[1] Flameproof:
HART model:
Ex iad IIC T4 (-40 °C<T_a<+70 °C)
FOUNDATION fieldbus model:
Ex iad IIC T4 (-40 °C<T_a<+60 °C)

I3[1] Intrinsically Safe:
HART model:
Ex ia IIC T4 (-50 °C<T_a<+70 °C)
4-20 mA / HART model: U_i=30 V, I_i=130 mA, P_i=1.0 W, C_i=7.25 nF, L_i=108 µH
FOUNDATION fieldbus model:
Ex ia IIC T4 (-50 °C<Ta< +60 °C)
U_i=30 V, I_i=300 mA, P_i=1.5 W, C_i~0 nF, L_i~0 µH

IC[1] FOUNDATION fieldbus FISCO model:
Ex ia IIC T4 (-50 °C<Ta< +60 °C)
U_i=17.5 V, I_i=380 mA, P_i=5.32 W, C_i~0 nF, L_i~0 µH

NCC/INMETRO Approvals

SPECIAL CONDITIONS FOR SAFE USE (X)

Refer to Certificate:
4205/07X

E2 Flameproof:
BR-Ex d/ia IIC T4 -40 °C≤T_a≤+70 °C[2] Gb/Ga
Approval valid for HART and FOUNDATION fieldbus options.

I2, IB Intrinsically Safe:
BR-Ex ia IIC T4 -40 °C≤T_a≤+70 °C[2] Ga
Approval valid for HART and FOUNDATION fieldbus options.

Overfill Protection

Cert no: Z-65.16-476

U1 TÜV-tested and approved for overfill protection according to the German WHG regulations
Approval valid for HART option.

Technology Institution of Industrial Safety (TIIS) Approval

E4[1] Flameproof:
Transmitter: Ex d [ia] IIC T4
Probe: Ex ia IIC T4
Installation Drawing: 05300-00548.
Approval valid for HART and FOUNDATION fieldbus options.

For detailed information, refer to the Rosemount 5300 Series Reference Manual (Document No. 00809-0100-4530).

(1) Ordering Information Code for Product Certificates, see page 8 and page 13.
(2) +60 °C with FOUNDATION fieldbus.

Dimensional Drawings

Dimensions are in inches
(millimeters)

RIGID SINGLE LEAD PROBE WITH FLANGE CONNECTION

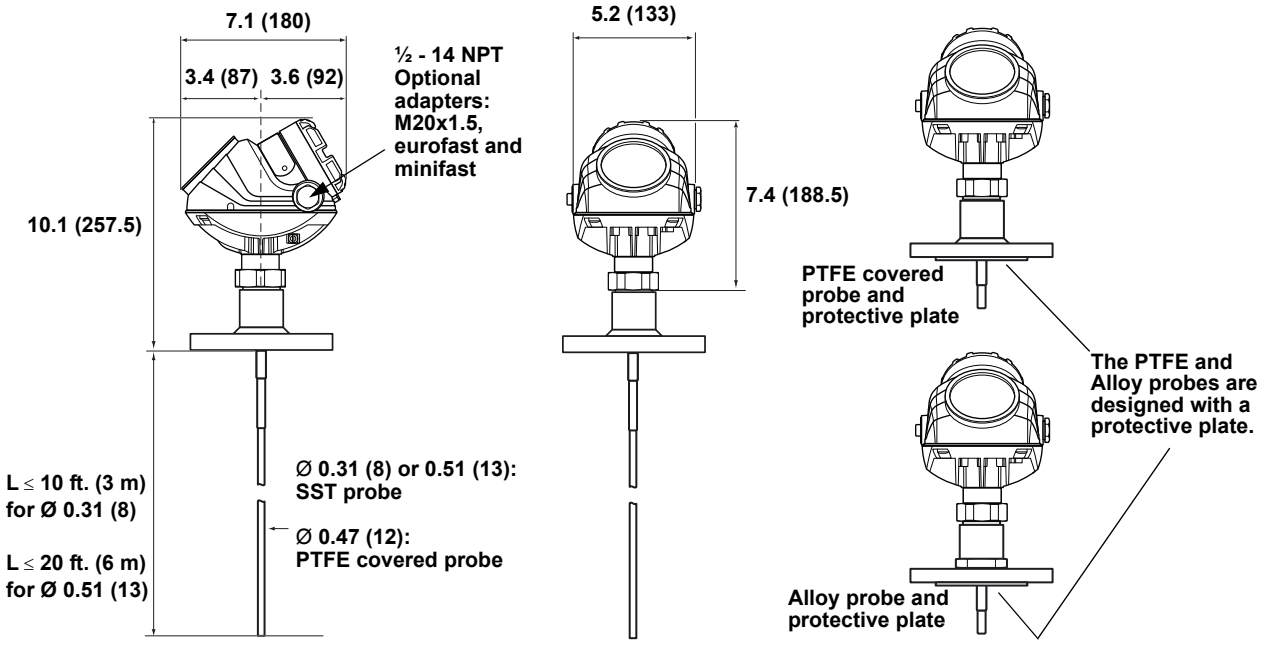

HTHP/HP/C version

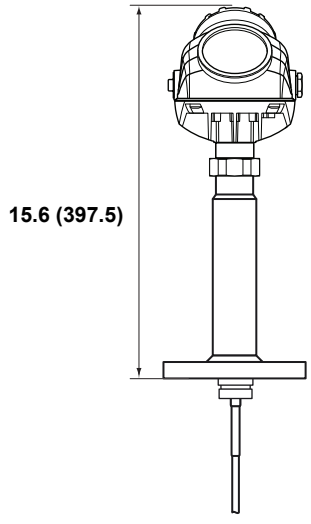

HTHP/HP Plate Design
(Option for Alloy versions)

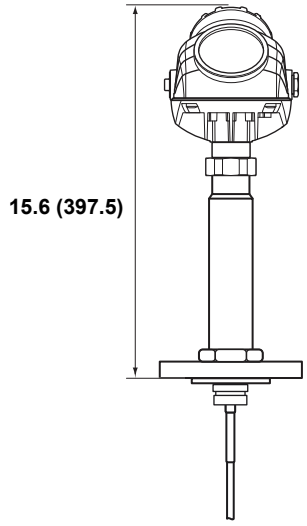

RIGID SINGLE LEAD PROBE WITH TRI-CLAMP CONNECTION

Dimensions are in inches
(millimeters)

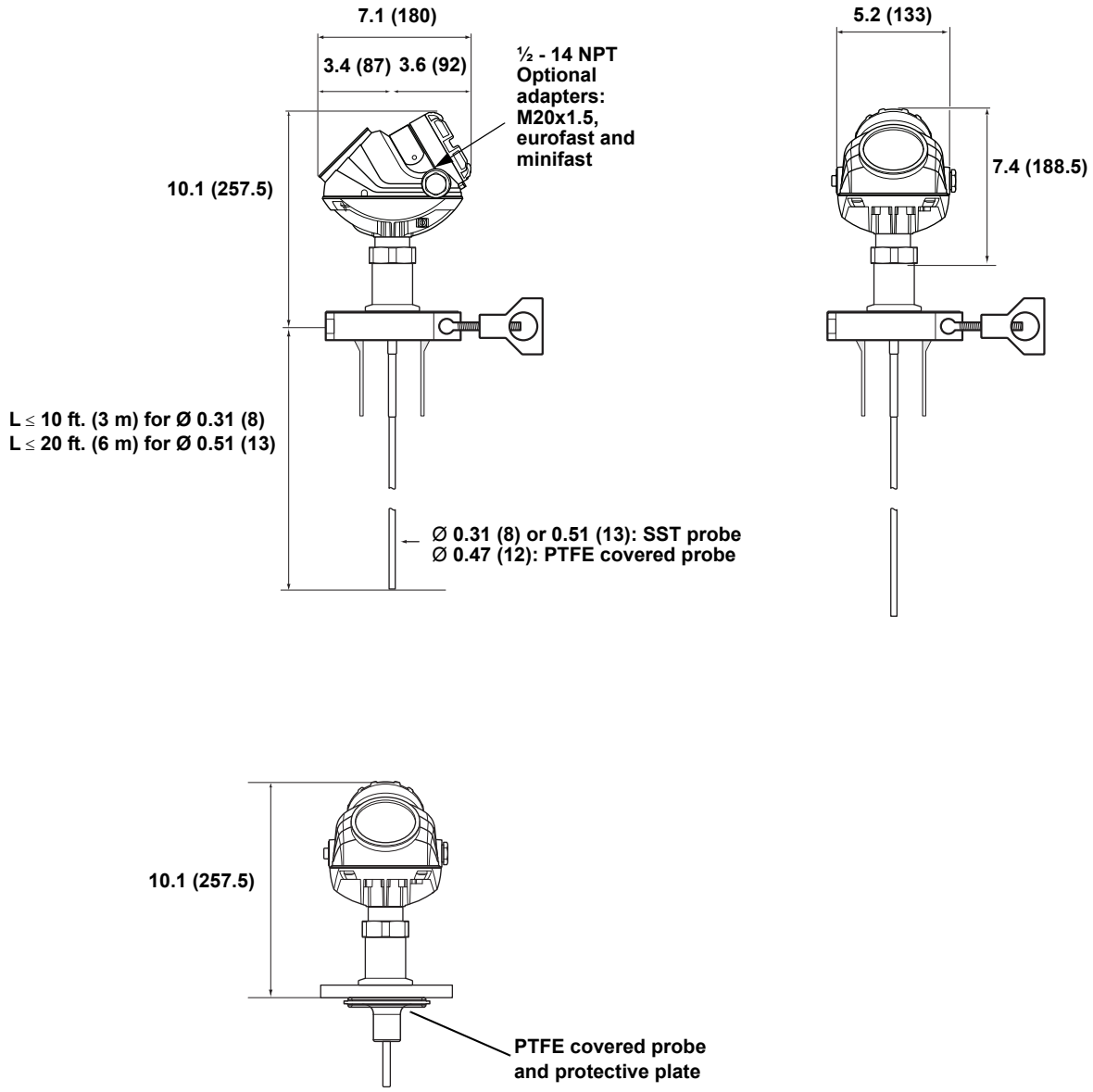

RIGID SINGLE LEAD PROBE WITH THREADED CONNECTION

Dimensions are in inches
(millimeters)

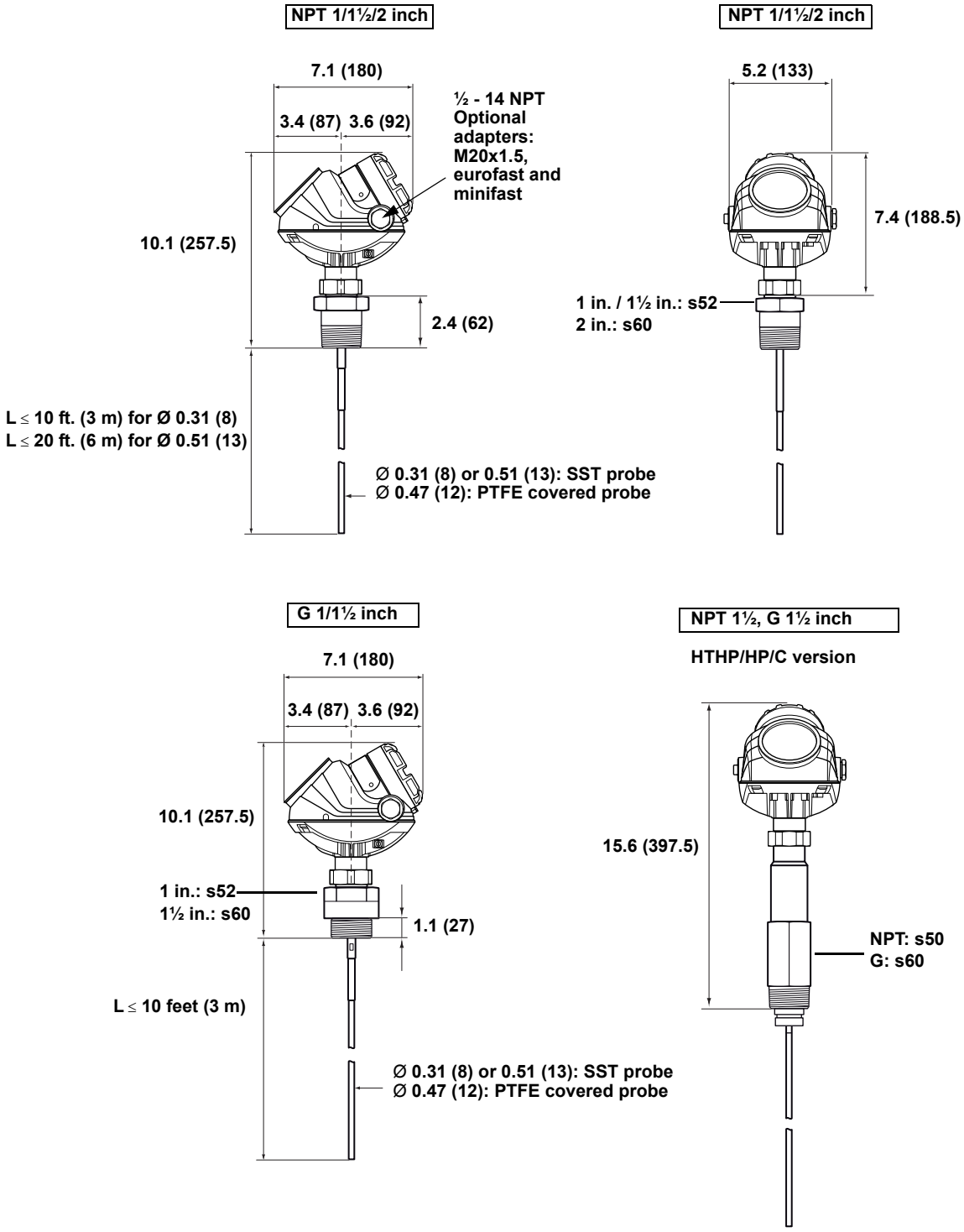

FLEXIBLE SINGLE LEAD PROBE WITH FLANGE CONNECTION

Dimensions are in inches (millimeters)

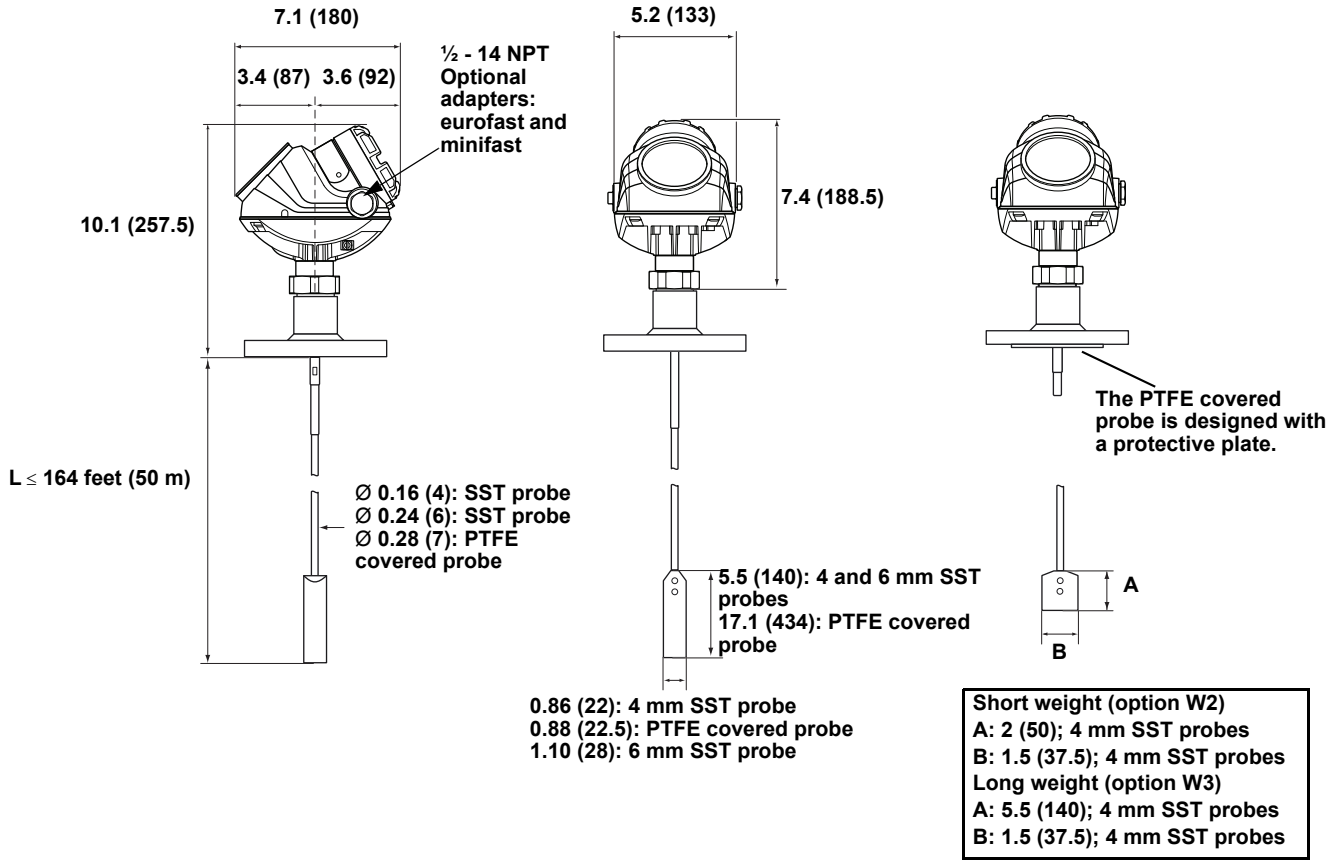

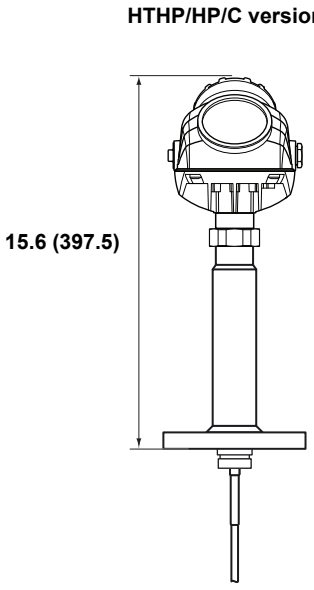

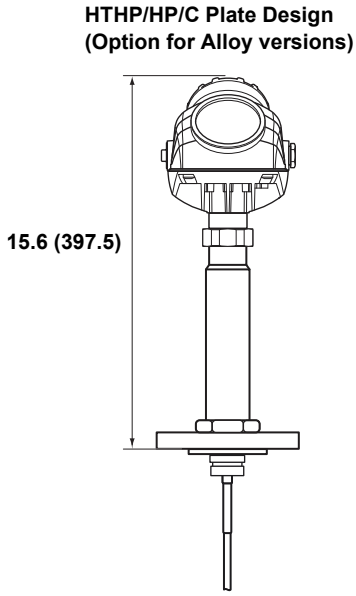

FLEXIBLE SINGLE LEAD PROBE WITH TRI-CLAMP CONNECTION

Dimensions are in inches (millimeters)

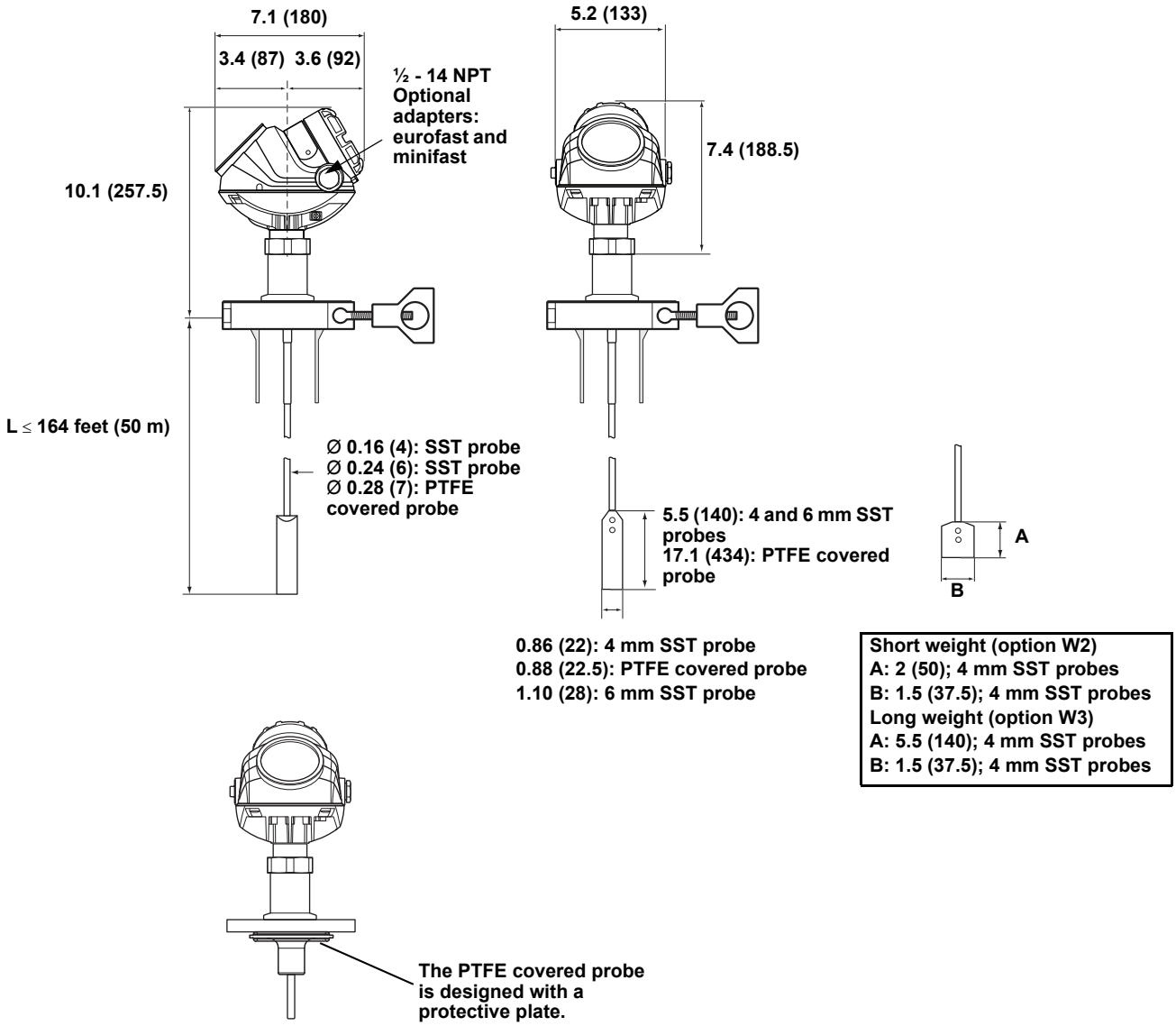

FLEXIBLE SINGLE LEAD PROBE WITH THREADED CONNECTION

Dimensions are in inches (millimeters)

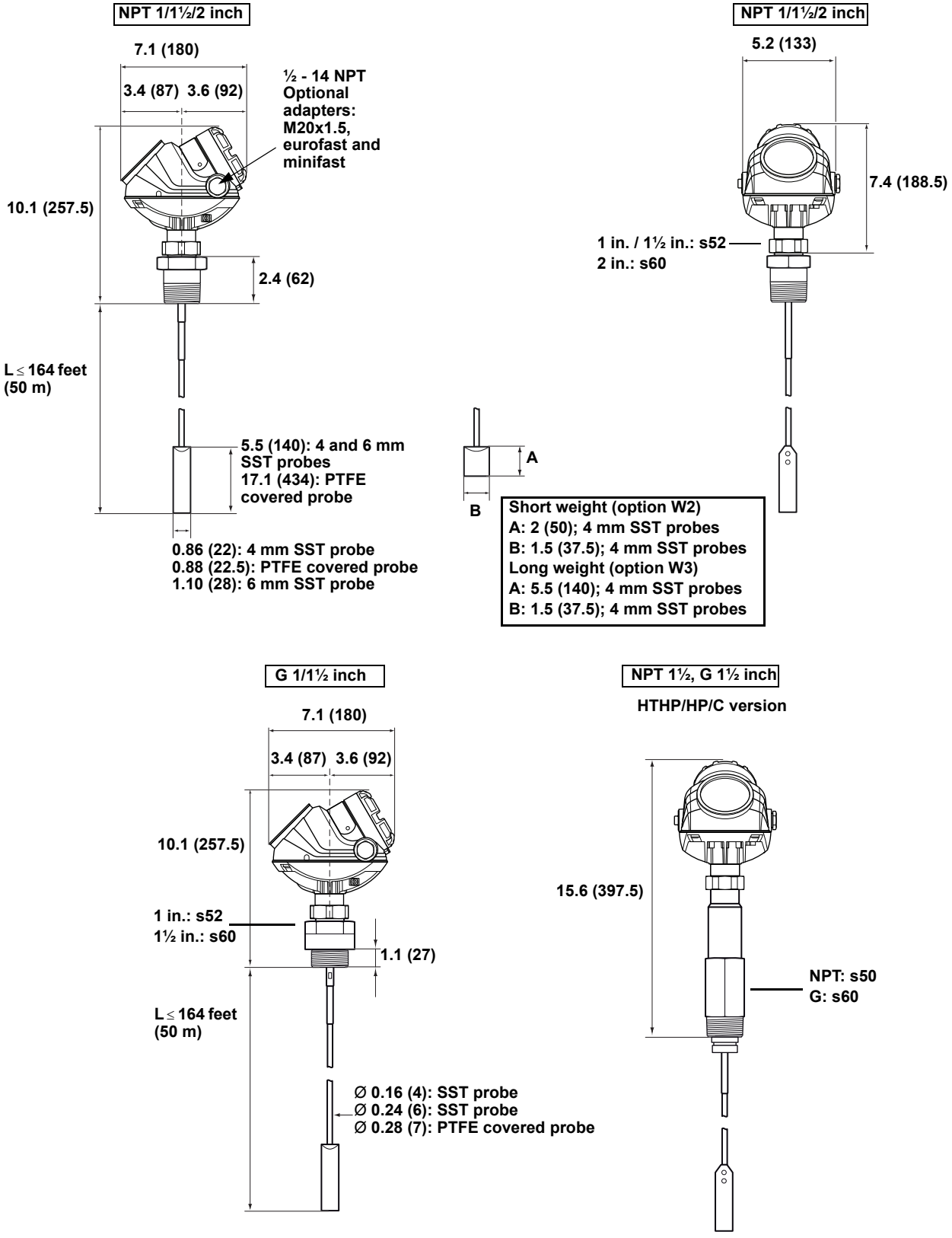

COAXIAL PROBE WITH FLANGE CONNECTION

Dimensions are in inches
(millimeters)

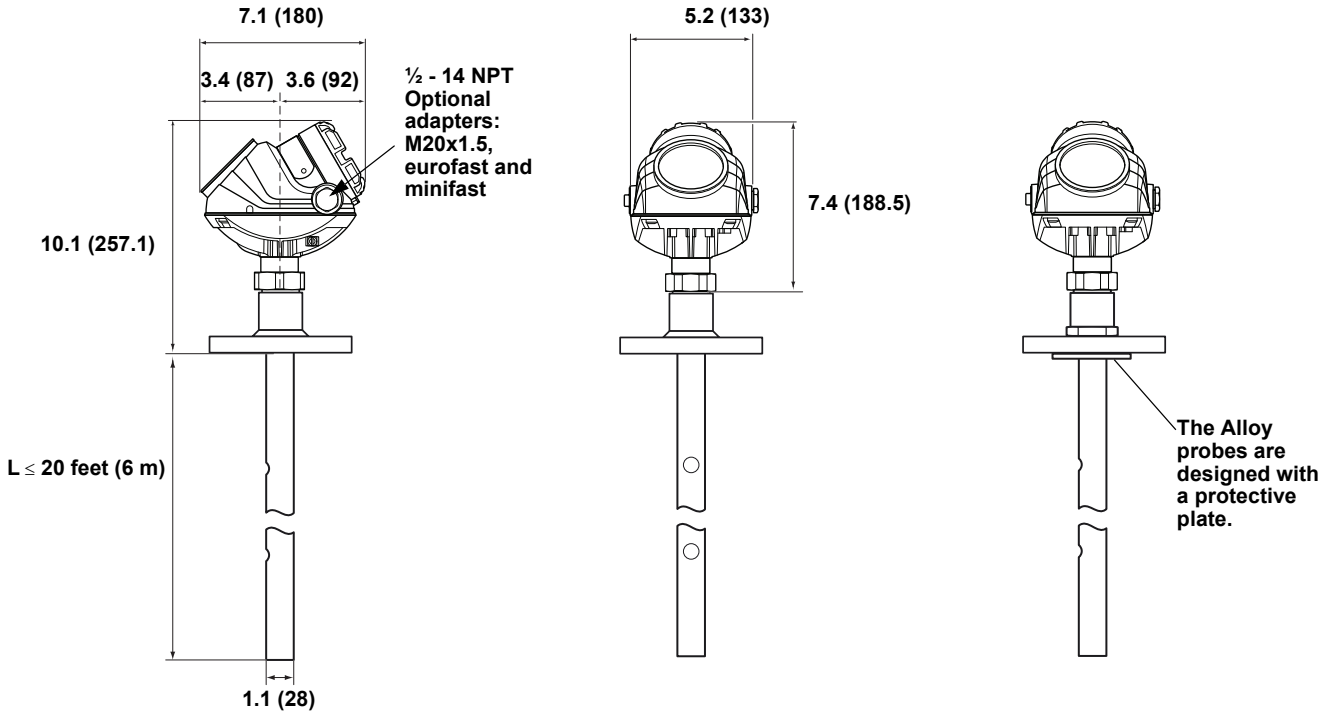

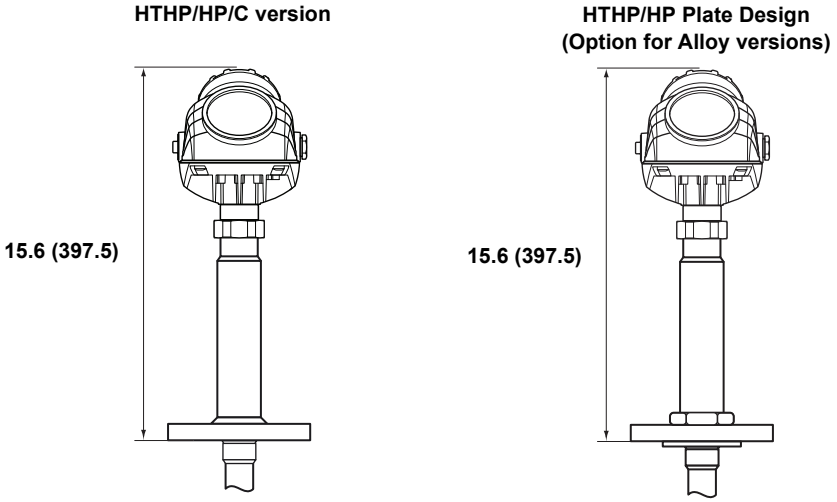

COAXIAL PROBE WITH THREADED CONNECTION

Dimensions are in inches
(millimeters)

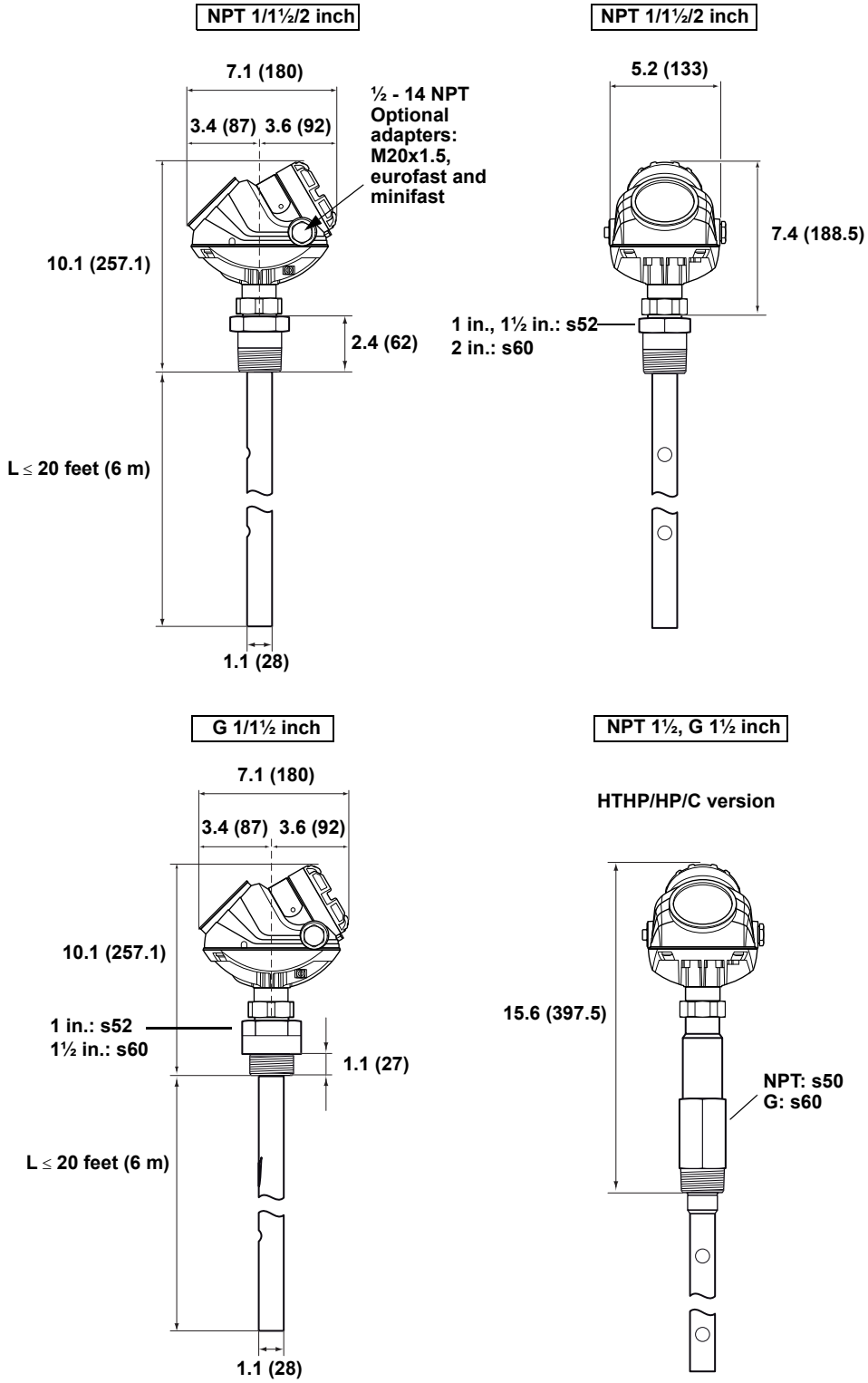

RIGID TWIN LEAD PROBE

Dimensions are in inches
(millimeters)

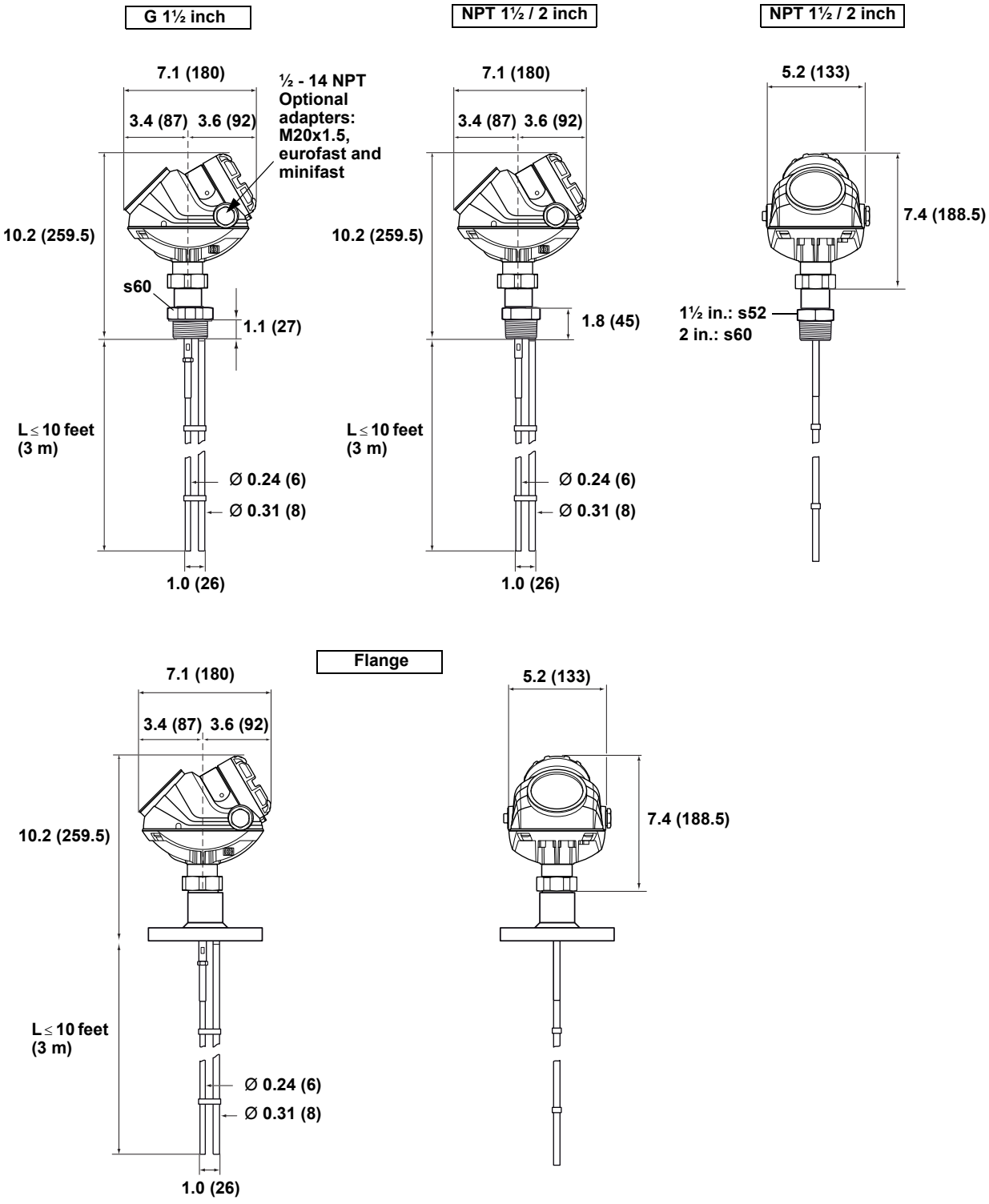

FLEXIBLE TWIN LEAD PROBE

Dimensions are in inches
(millimeters)

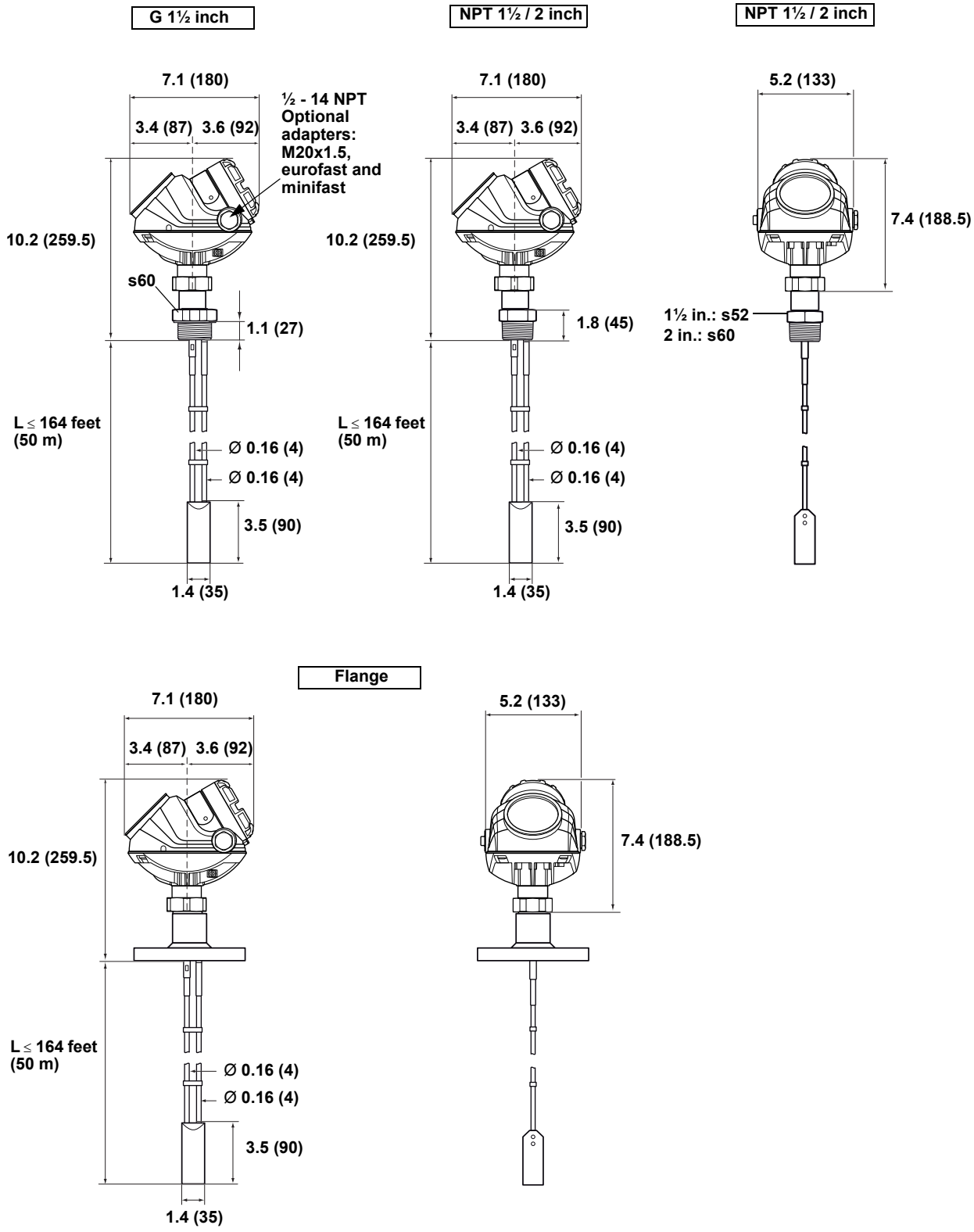

BRACKET MOUNTING

Dimensions are in inches
(millimeters)

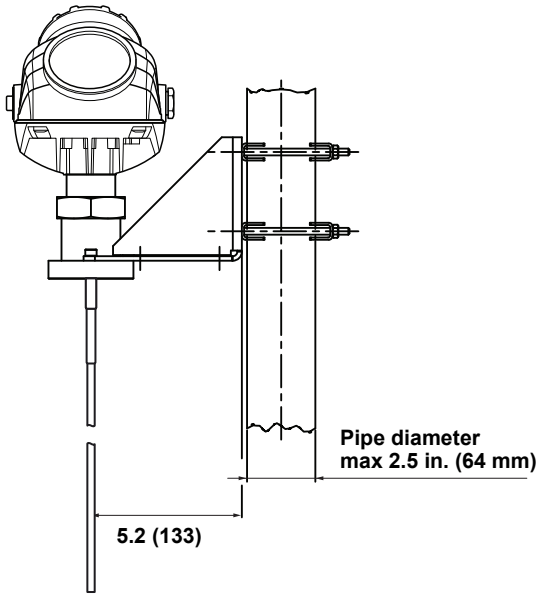

**Pipe mounting
(vertical pipe)**

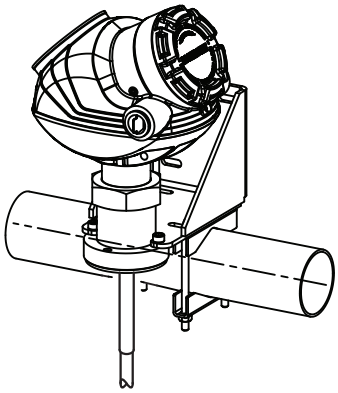

**Pipe mounting
(horizontal pipe)**

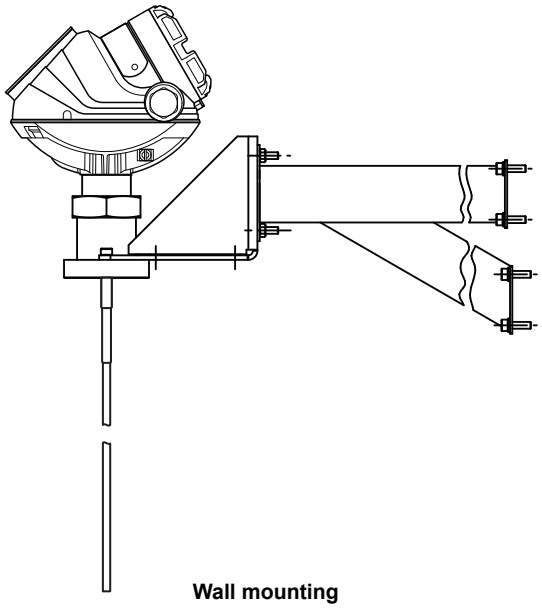

Wall mounting

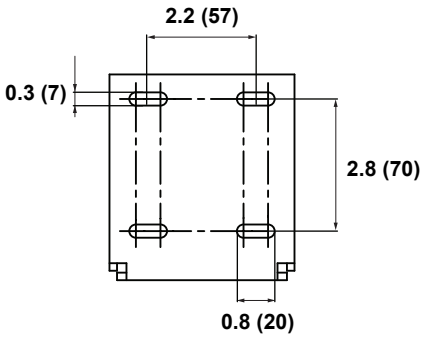

**Hole pattern
wall mounting**

REMOTE HOUSING

Dimensions are in inches
(millimeters)

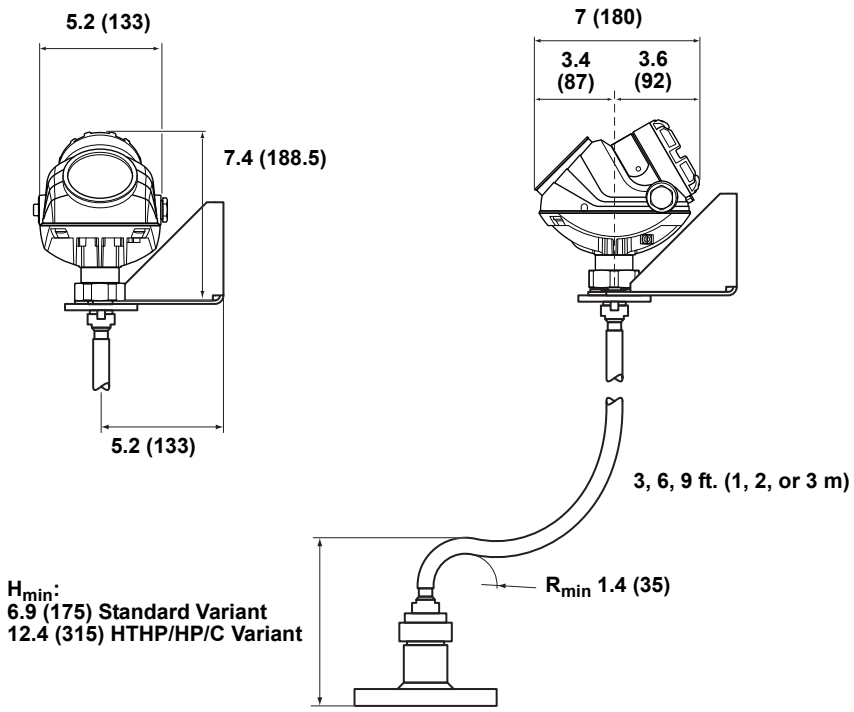

SPECIAL FLANGES AND FLUSHING CONNECTION RINGS

Dimensions are in inches (millimeters)

Raised Face **Recessed Face**

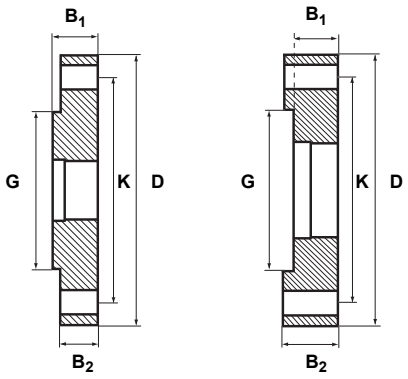

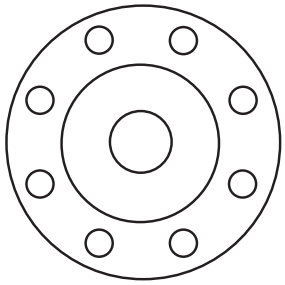

D: Outside diameter
B1: Flange thickness with gasket surface
B2: Flange thickness without gasket surface
F=B_1-B_2: Gasket surface thickness
G: Gasket surface diameter
 # Bolts: Number of Bolts
K: Bolt hole circle diameter

NOTE
Dimensions may be used to aid in the identification of installed flanges. It is not intended for manufacturing use.

Special Flanges(1)	D	B_1	B_2	F	G	# Bolts	K
Fisher 249B/259B(2)	9.00 (228.6)	1.50 (38.2)	1.25 (31.8)	0.25 (6.4)	5.23 (132.8)	8	7.25 (184.2)
Fisher 249C(3)	5.69 (144.5)	0.94 (23.8)	1.13 (28.6)	-0.19 (-4.8)	3.37 (85.7)	8	4.75 (120.65)
Masoneilan(2)	7.51 (191.0)	1.54 (39.0)	1.30 (33.0)	0.24 (6.0)	4.02 (102.0)	8	5.87 (149.0)

(1) These flanges are also available in a vented version.
(2) Flange with raised face.
(3) Flange with recessed face.

Masoneilan and Fisher flanges are also available in vented versions (see “Vented Flanges” on page 15), with the same dimensions as shown in the table above.

Vented flanges must be ordered with a 1 ½ in. NPT threaded process connection (code RA).

For information about flange temperature and pressure ratings, see page 22.

Flushing Connection Ring

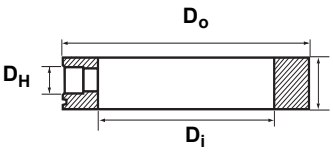

Height: 0.97 in. (24.6 mm)

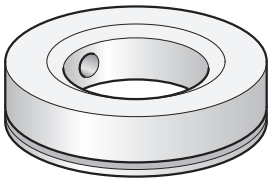

Flushing Connection Rings	D_i	D_o	D_H
2 in. ANSI	2.12 (53.8)	3.62 (91.9)	¼ in. NPT
3 in. ANSI	3.60 (91.4)	5.00 (127.0)	¼ in. NPT
4 in. ANSI	3.60 (91.4)	6.20 (157.5)	¼ in. NPT
DN50	2.40 (61.0)	4.00 (102.0)	¼ in. NPT
DN80	3.60 (91.4)	5.43 (138.0)	¼ in. NPT

Pressure and temperature rating for flushing ring up to Class 2500.

Rosemount 5300 Series

Rosemount Level Solutions

Emerson provides a complete range of Rosemount products for level measurement applications.

Vibrating Fork Switches – Point Level Detection

For high and low alarms, overfill protection, pump control, including wide pressure and temperature requirements, and hygienic applications. Flexible mounting. Immune to changing process conditions and suitable for most liquids.
The product line consists of:

- Rosemount 2160 Wireless
- Rosemount 2130 Enhanced
- Rosemount 2120 Full-featured
- Rosemount 2110 Compact

Differential Pressure – Level or Interface Measurement

Flexible mounting for liquid tank levels, including those with wide temperature and pressure requirements. Can be isolated by valves. Unaffected by: vapor space changes, surface conditions, foam, corrosive fluids, internal tank equipment. Optimize performance with direct mount, Tuned-System Assemblies:

- Rosemount DP Level Transmitters and Remote Seals
- Rosemount 3051S_L, 3051L, and 2051L Liquid Level Transmitters

Ultrasonic – Level Measurement

Top mounted, non-contacting for simple tank and open air level measurements. Unaffected by fluid properties such as: density, viscosity, dirty coating, and corrosiveness. Appropriate for routine applications outside of explosion proof areas.
The product line consists of:

- Rosemount 3100 Series Ultrasonic Process Level Transmitters

Guided Wave Radar – Level and Interface Measurement

Top mounted, direct level and interface measurement of liquids or solids, including those with wide temperature and pressure requirements. Unaffected by changing process conditions. Good fit for small spaces and easy swap for older technologies.
The product line consists of:

- Rosemount 5300 Series – Accurate, superior performance transmitter in most applications including process vessels and control
- Rosemount 3300 Series – Versatile and easy-to-use transmitter in most liquid storage and monitoring applications

Non-contacting Radar – Level Measurement

Top mounted, direct level measurement for liquids or solids, including those with wide temperature and pressure requirements. Can be isolated by valves. Unaffected by changing process conditions. Good for dirty, coating, and corrosive applications.
The product line consists of:

- Rosemount 5400 Series – Accurate, superior performance 2-wire transmitters for most liquid level applications and process conditions
- Rosemount 5600 Series – 4-wire transmitters with maximum sensitivity and performance for solids, challenging reactors, rapid level changes and excessive process conditions

Chambers for Process Level Instrumentation

- Rosemount 9901 – High quality chambers for external mounting of level measurement and control instrumentation on process vessels

Standard Terms and Conditions of Sale can be found at www.rosemount.com\terms_of_sale
The Emerson logo is a trademark and service mark of Emerson Electric Co.
Rosemount and the Rosemount logotype are registered trademarks of Rosemount Inc.
Fisher is a mark owned by Fisher Controls International LLC, a member of the Emerson Process Management business division of Emerson Electric Co.
PlantWeb is a registered trademark of the Emerson Process Management group of companies.
HART and WirelessHART are registered trademarks of the HART Communication Foundation.
Viton, and Kalrez are registered trademarks of Du Pont Performance Elastomers.
FOUNDATION is a trademark of the Fieldbus Foundation.
DeltaV is a trademark of Emerson Process Management group of companies.
Eurofast and Minifast are registered trademarks of Turck Inc.
Masoneilan is a registered trademark of Dresser Inc.
All other marks are the property of their respective owners.
© 2010 Rosemount Inc. All rights reserved.

Emerson Process Management
Rosemount Measurement
8200 Market Boulevard
Chanhassen MN 55317 USA
Tel (USA) 1 800 999 9307
Tel (International) +1 952 906 8888
Fax +1 952 949 7001

Emerson Process Management
Blegistrasse 23
P.O. Box 1046
CH 6341 Baar
Switzerland
Tel +41 (0) 41 768 6111
Fax +41 (0) 41 768 6300

Emerson FZE
P.O.Box 17033
Jebeli Ali Free Zone
Dubai UAE
Tel +971 4 811 8100
Fax +971 4 886 5465

Emerson Process Management Asia Pacific Pte Ltd
1 Pandan Crescent
Singapore 128461
Tel +65 6777 8211
Fax +65 6777 0947
Service Support Hotline: +65 6770 8711
Email: Enquiries@AP.EmersonProcess.com

EMERSON™
Process Management

Reference Manual
00809-0100-4530, Rev CA
January 2014

Rosemount 5300 Series

Superior Performance Guided Wave Radar



HART COMMUNICATION PROTOCOL

FOUNDATION

ROSEMOUNT

EMERSON
Process Management

Rosemount 5300 Series Guided Wave Radar Level and Interface Transmitters

⚠ WARNING

Read this manual before working with the product. For personal and system safety, and for optimum product performance, make sure you thoroughly understand the contents before installing, using, or maintaining this product.

Within the United States, Emerson Process Management has two toll-free assistance numbers.

Customer Central: 1-800-999-9307(*7:00 a.m. to 7:00 p.m. CST)*
Technical support, quoting, and order-related questions.

North American Response Center:

Equipment service needs.

1-800-654-7768 (*24 hours a day – Includes Canada*)

For equipment service or support needs outside the United States, contact your local Emerson Process Management representative.

⚠ CAUTION

The products described in this document are NOT designed for nuclear-qualified applications.

Using non-nuclear qualified products in applications that require nuclear-qualified hardware or products may cause inaccurate readings.

For information on Rosemount nuclear-qualified products, contact your local Emerson Process Management Sales Representative.

This product is designed to meet FCC and R&TTE requirements for a non-intentional radiator. It does not require any licensing whatsoever and has no tank restrictions associated with telecommunications issues.

This device complies with part 15 of the FCC rules. Operation is subject to the following two conditions: (1) This device may not cause harmful interference, and (2) this device must accept any interference received, including interference that may cause undesired operation.

Contents

Section 1: Introduction

1.1 Safety messages 1
1.2 Manual overview 2
1.3 Service support 4
1.4 Product recycling/disposal 4

Section 2: Transmitter overview

2.1 Theory of operation 6
2.2 Applications 7
2.3 Components of the transmitter 10
2.4 System architecture 12
2.5 Probe selection guide 14
2.6 Measuring range 15
2.7 Process characteristics 16
2.7.1 Coating 16
2.7.2 Bridging 16
2.7.3 Foam 16
2.7.4 Vapor 16
2.7.5 Boiling hydrocarbons 17
2.7.6 Interface 17
2.8 Vessel characteristics 19
2.8.1 Heating coils, agitators 19
2.8.2 Tank shape 20
2.9 Installation procedure 21

Section 3: Mechanical installation

3.1 Safety messages 23
3.2 Mounting considerations 24
3.2.1 Process connection 24
3.2.2 Installation of single lead probes in non-metallic vessels 26
3.2.3 Installation in concrete silos 27
3.2.4 Considerations for solid applications 27
3.2.5 Mounting in chamber/still pipe 28
3.2.6 Replacing a displacer in an existing displacer chamber 31
3.2.7 Free space 33
3.2.8 Recommended mounting position for liquids 34

3.2.9 Recommended mounting for solids 35
3.2.10 Insulated tanks 36
3.3 Mounting 37
3.3.1 Flange connection 37
3.3.2 Threaded connection 39
3.3.3 Tri-Clamp connection 39
3.3.4 Bracket mounting 40
3.3.5 Shortening the probe 41
3.3.6 Anchoring 44
3.3.7 Mounting a centering disc for pipe installations 47

Section 4: Electrical installation

4.1 Safety messages 53
4.2 Cable/conduit entries 54
4.3 Grounding 54
4.4 Cable selection 55
4.5 Hazardous areas 55
4.6 HART 55
4.6.1 Power requirements 55
4.6.2 Maximum loop resistance 56
4.6.3 Connecting the transmitter 57
4.6.4 Non-intrinsically safe output 58
4.6.5 Intrinsically safe output 59
4.7 FOUNDATION fieldbus 60
4.7.1 Power requirements 60
4.7.2 Connecting the transmitter 60
4.7.3 Non-intrinsically safe output 63
4.7.4 Intrinsically safe output 64
4.8 Optional devices 65
4.8.1 Tri-Loop HART to analog converter 65
4.8.2 751 Field Signal Indicator 66

Section 5: Configuration

5.1 Safety messages 67
5.2 Overview 68
5.2.1 Basic configuration 68
5.2.2 Echo tuning 68

5.2.3 LCD configuration 68
5.2.4 Advanced configuration 68
5.2.5 Configuration tools 69
5.3 Host system integration 70
5.3.1 Confirm system readiness 70
5.3.2 Set alarm limits 71
5.4 Basic configuration parameters 74
5.4.1 Measurement units 74
5.4.2 Tank and probe geometry 74
5.4.3 Tank environment 76
5.4.4 Volume configuration 77
5.4.5 Analog output (HART) 80
5.5 Basic configuration using a Field Communicator 81
5.6 Basic configuration using Rosemount Radar Master 84
5.6.1 System requirements 84
5.6.2 Help in RRM 84
5.6.3 Installing the RRM software for HART communication 85
5.6.4 Specifying the COM port 86
5.6.5 To set the COM port buffers 86
5.6.6 Installing the RRM software for FOUNDATION fieldbus 87
5.6.7 Specifying measurement units 89
5.6.8 Using the setup functions 89
5.6.9 Guided Setup 90
5.7 Basic configuration using AMS Suite (HART) 105
5.8 Basic configuration using DeltaV 106
5.9 FOUNDATION fieldbus overview 111
5.9.1 Assigning device tag and node address 111
5.9.2 Foundation fieldbus block operation 112
5.10 Configure the AI block 114
5.10.1 Application example 1 118
5.10.2 Application example 2 119
5.10.3 Application example 3 120
5.11 Tri-Loop HART-to-Analog converter 122
5.12 HART multi-drop configuration 124

Section 6: Operation

6.1 Safety messages 127

6.2 Viewing measurement data 128
6.2.1 Using the display panel 128
6.2.2 Specifying display panel variables 129
6.2.3 Viewing measurement data in RRM 134
6.2.4 Viewing measurement data in AMS Suite 135
6.2.5 Viewing measurement data in DeltaV 136

Section 7: Service and troubleshooting

7.1 Safety messages 137
7.2 Analyzing the measurement signal. 139
7.3 Using the echo curve analyzer 140
7.3.1 Using Rosemount Radar Master. 141
7.3.2 Using the Echo Curve Analyzer with a Field Communicator 145
7.4 Product Surface Peak not found 147
7.5 Interface Peak not found. 148
7.6 Disturbance echo handling 149
7.6.1 Amplitude threshold curve 149
7.6.2 Disturbances at the top of the tank. 150
7.6.3 Signal quality metrics. 150
7.7 Interface measurements with fully submerged probes 150
7.8 Analog output calibration. 151
7.9 Level and distance calibration 152
7.10 Logging measurement data 154
7.11 Backing up the transmitter configuration. 155
7.12 Configuration report. 156
7.13 Reset to factory settings. 157
7.14 Diagnostics 158
7.15 Using the Simulation Mode 160
7.16 Write protecting a transmitter 162
7.17 Enter Service Mode in RRM 162
7.18 Viewing Input and Holding Registers. 162
7.19 Removing the transmitter head 164
7.20 Changing a probe 165
7.20.1 Probe and firmware compatibility. 165
7.20.2 Check firmware and probe version 166
7.20.3 Changing the probe 167
7.21 Troubleshooting guide 169

7.22 Diagnostic Messages 172
7.22.1 Device Status 172
7.22.2 Errors 173
7.22.3 Warnings 174
7.22.4 Measurement Status 175
7.22.5 Interface Status 177
7.22.6 Volume Calculation Status 178
7.22.7 Analog output status 179
7.23 LCD Error Messages 180
7.24 LED Error Messages 181
7.25 FOUNDATION fieldbus Error Messages 182
7.25.1 Resource Block 182
7.25.2 Transducer Block 183
7.25.3 Analog Input (AI) Function Block 184

Section 8: Safety Instrumented Systems (4-20 mA only)

8.1 Safety messages 188
8.2 Terms and definitions 189
8.3 Safety Instrumented System (SIS) Certification 189
8.4 Safety-certified identification 190
8.5 Functional specifications 191
8.6 Installation in SIS applications 191
8.7 Configuring in SIS applications 192
8.8 SIS operation and maintenance 193
8.8.1 Suggested comprehensive proof test 194
8.8.2 Suggested simple proof test 197
8.9 Inspection 198
8.10 Specifications 199

Appendix A: Reference data

A.1 Specifications 202
A.1.1 Accuracy over measuring range 206
A.1.2 Maximum measuring range 208
A.1.3 Maximum measuring range for remote housing 209
A.1.4 Process temperature and pressure rating 210
A.1.5 Flange connection rating 212
A.1.6 Flange rating standards 213

A.1.7 Ambient temperature 214
A.1.8 Start-up sequence 214
A.2 Dimensional drawings 215
A.2.1 Probe Type 4A, 4B 215
A.2.2 Probe Type 4U 218
A.2.3 Probe Type 5A, 5B 219
A.2.4 Probe Type 3A, 3B 222
A.2.5 Probe type 3V 224
A.2.6 Probe Type 1A 225
A.2.7 Probe Type 2A 226
A.2.8 Bracket mounting (option code BR) 227
A.2.9 Remote housing (option code B1, B2, B3) 228
A.3 Ordering information 229
A.4 Spare parts 242

Appendix B: Product certifications

B.1 Safety messages 253
B.2 Hazardous Locations certifications 255
B.2.1 North-American certifications 255
B.2.2 European certifications 259
B.2.3 Brazilian certifications 263
B.2.4 Chinese certifications 265
B.2.5 Japanese certifications 266
B.2.6 IECEx certifications 267
B.2.7 Other certifications 270
B.3 Combination approvals 271
B.4 Approval drawings 271

Appendix C: Advanced configuration

C.1 Safety messages 277
C.2 User defined Upper Reference Point 279
C.3 Handling of disturbances from nozzle 280
C.3.1 Use the Trim Near Zone function 280
C.3.2 Changing the Hold Off Distance/Upper Null Zone 282
C.4 Threshold settings 284
C.5 Probe End Projection 290
C.5.1 Guided Probe End Projection setup 291

C.6 Echo tracking 292
C.7 Dielectric Constant settings 294
C.7.1 Static Vapor Compensation 294
C.7.2 Lower Product 294
C.8 Dynamic Vapor Compensation 295
C.8.1 Check if Dynamic Vapor Compensation function is supported 296
C.8.2 Review installation guidelines 297
C.8.3 Calibrate Dynamic Vapor Compensation function 300
C.9 Signal Quality Metrics 304
C.9.1 Viewing Signal Quality Metrics in RRM 306

Appendix D: Remote mounting

D.1 Remote housing, new units 307
D.2 Remote connection, field retrofit 309
D.3 Remote housing configuration 310

Appendix E: Level transducer block

E.1 Overview 311
E.1.1 Definition 311
E.1.2 Channel Definitions 312
E.2 Parameters and Descriptions 313
E.3 Supported Units 320
E.3.1 Unit Codes 320
E.4 Diagnostics Device Errors 322

Appendix F: Register transducer block

F.1 Overview 325
F.1.1 Register Access Transducer Block Parameters 325

Appendix G: Advanced configuration transducer block

G.1 Overview 329
G.1.1 Advanced Configuration Transducer Block Parameters 329

Appendix H: Resource transducer block

H.1 Overview 333
H.2 Parameters and Descriptions 333
H.2.1 Alerts 337

H.2.2 Alarm Priority 341
H.2.3 Process Alarms 341
H.2.4 Recommended actions for Alerts 341

Appendix I: Analog-Input block

I.1 Simulation 346
I.2 Damping 347
I.3 Signal Conversion 347
I.4 Block Errors 348
I.5 Modes 349
I.6 Alarm Detection 349
I.6.1 Status Handling 350
I.7 Advanced Features 351
I.8 Configure the AI Block 352

Section 1 Introduction

Safety messages . . . . . page 1
Manual overview . . . . . page 2
Service support . . . . . page 4
Product recycling/disposal . . . . . page 4

1.1 Safety messages

Procedures and instructions in this manual may require special precautions to ensure the safety of the personnel performing the operations. Information that raises potential safety issues is indicated by a warning symbol (⚠). Refer to the safety messages listed at the beginning of each section before performing an operation preceded by this symbol.

⚠ WARNING

Failure to follow these installation guidelines could result in death or serious injury.

- Make sure only qualified personnel perform the installation.
- Use the equipment only as specified in this manual. Failure to do so may impair the protection provided by the equipment.

Explosions could result in death or serious injury.

- Verify that the operating environment of the transmitter is consistent with the appropriate hazardous locations certifications.
- Before connecting a HART®-based communicator in an explosive atmosphere, make sure the instruments in the loop are installed in accordance with intrinsically safe or non-incendive field wiring practices.

Electrical shock could cause death or serious injury.

- Use extreme caution when making contact with the leads and terminals.

⚠ WARNING

Any substitution of non-authorized parts or repair, other than exchanging the complete transmitter head or probe assembly, may jeopardize safety and is prohibited.

Unauthorized changes to the product are strictly prohibited as they may unintentionally and unpredictably alter performance and jeopardize safety. Unauthorized changes that interfere with the integrity of the welds or flanges, such as making additional perforations, compromise product integrity and safety. Equipment ratings and certifications are no longer valid on any products that have been damaged or modified without the prior written permission of Emerson Process Management. Any continued use of product that has been damaged or modified without prior written authorization is at the customer's sole risk and expense.

1.2 Manual overview

This manual provides installation, configuration and maintenance information for the Rosemount 5300 Series Radar Transmitter.

Section 2: Transmitter overview

- Theory of operation
- Description of the transmitter
- Process and vessel characteristics

Section 3: Mechanical installation

- Mounting considerations
- Mounting

Section 4: Electrical installation

- Grounding
- Cable selection
- Power requirements
- Wiring
- Optional devices

Section 5: Configuration

- Basic configuration
- Configuration using the Field Communicator
- Configuration using the RRM software
- Configuration using AMS Suite
- Configuration using DeltaV
- Foundation™ fieldbus

Section 6: Operation

- Viewing measurement data
- Display functionality

Section 7: Service and troubleshooting

- Service functions
- Diagnostic messages
- Error messages

Section 8: Safety Instrumented Systems (4-20 mA only)

- Functional specifications
- Installation
- Configuration
- Operation and maintenance
- Inspection
- Specifications

Appendix A: Reference data

- Specifications
- Dimensional drawings
- Ordering information

Appendix B: Product certifications

- Labels
- European ATEX Directive information
- NEPSI approvals
- FM approvals
- CSA approvals
- IECEx approvals
- Combination approvals
- Approval drawings

Appendix C: Advanced configuration

- Advanced tank geometry
- Advanced transmitter configuration
- Dynamic Vapor Compensation
- Signal Quality Metrics (SQM)

Appendix D: Remote mounting

- Remote housing, new units
- Remote housing, field retrofit
- Remote housing configuration

Appendix E: Level transducer block

- Describes the operation and parameters of the Level transducer block.

Appendix F: Register transducer block

- Describes the operation and parameters of the register transducer block.

Appendix G: Advanced configuration transducer block

- Describes the operation and parameters of the advanced configuration transducer block.

Appendix H: Resource transducer block

- Describes the operation and parameters of the resource transducer block.

Appendix I: Analog-Input block

- Describes the operation and parameters of the analog input transducer block.

1.3 Service support

To expedite the return process outside of the United States, contact the nearest Emerson Process Management representative.

Within the United States, call the Emerson Process Management Instrument and Valves Response Center using the 1-800-654-RSMT (7768) toll-free number. This center, available 24 hours a day, will assist you with any needed information or materials.

The center will ask for product model and serial numbers, and will provide a Return Material Authorization (RMA) number. The center will also ask for the process material to which the product was last exposed.

Emerson Process Management Instrument and Valves Response Center representatives will explain the additional information and procedures necessary to return goods exposed to hazardous substance can avoid injury if they are informed of and understand the hazard. If the product being returned was exposed to a hazardous substance as defined by OSHA, a copy of the required Material Safety Data Sheet (MSDS) for each hazardous substance identified must be included with the returned goods.

1.4 Product recycling/disposal

Recycling of equipment and packaging should be taken into consideration and disposed of in accordance with local and national legislation/regulations.

Section 2 Transmitter overview

Theory of operation . . . . . page 6
Applications . . . . . page 7
Components of the transmitter . . . . . page 10
System architecture . . . . . page 12
Probe selection guide . . . . . page 14
Measuring range . . . . . page 15
Process characteristics . . . . . page 16
Vessel characteristics . . . . . page 19
Installation procedure . . . . . page 21

2.1 Theory of operation

The Rosemount 5300 Series Radar Transmitter is a smart, two-wire continuous level transmitter based on Time Domain Reflectometry (TDR) principles. Low power nano-second-pulses are guided along an immersed probe. When a pulse reaches the surface, part of the energy is reflected back to the transmitter, and the time difference between the generated and reflected pulse is converted into a distance, which calculates the total level or interface level (see Figure 2-1).

The reflectivity of the product is a key parameter for measurement performance. The reflection intensity depends on the dielectric constant of the product. Media with a high dielectric constant gives better reflection (signal amplitude) and a longer measuring range.

Signal amplitude thresholds are used to separate the measurement signal from disturbing echoes and noise. The dielectric constant of the product is used for setting the automatically calculated amplitude thresholds. See "Analyzing the measurement signal" on page 139 for more information about threshold principle.

For interface measurements the dielectric constant of the upper product is essential for calculating the interface level.

Figure 2-1. Measurement principle

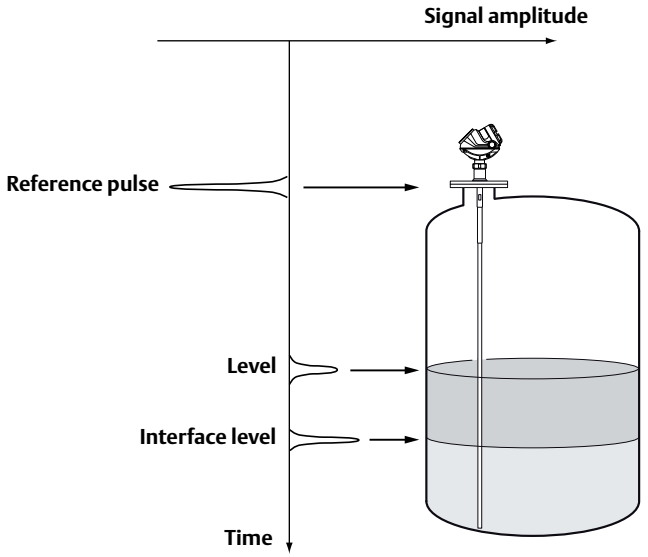

2.2 Applications

The Rosemount 5300 Series Radar Transmitter series is suited for aggregate (total) level measurements on most liquids, semi-liquids, solids, and liquid/liquid interfaces.

Guided microwave technology offers the highest reliability and precision to ensure measurements are virtually unaffected by temperature, pressure, vapor gas mixtures, density, turbulence, bubbling/boiling, low level, varying dielectric media, pH, and viscosity.

Guided wave radar technology in combination with advanced signal processing makes the Rosemount 5300 transmitters suitable for a wide range of applications:

Figure 2-2. Application examples

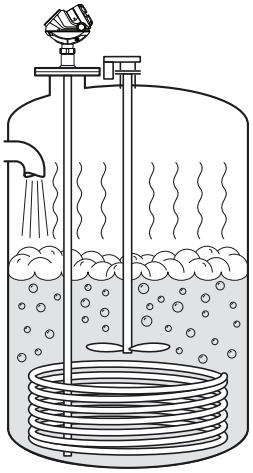

The Rosemount 5300 transmitter works well in boiling conditions with vapor and turbulence. If there are disturbing objects in the vicinity of the transmitter, the coaxial probe is particularly suitable.

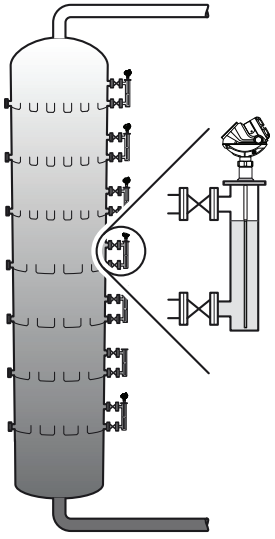

The Rosemount 5300 Series is well suited for chamber applications, such as distillation columns.

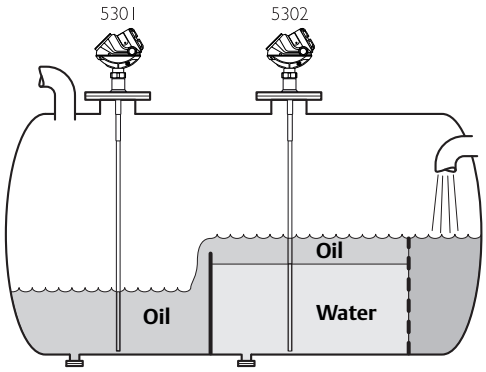

The Rosemount 5302 measures both level and interface level in a separator tank.

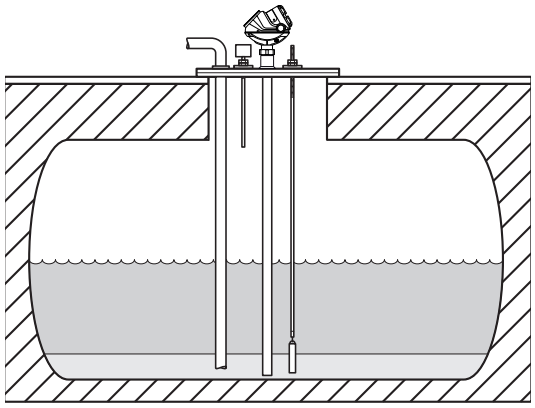

The Rosemount 5300 Series is a good choice for underground tanks. It is installed on the top of the tank with the radar pulse concentrated near the probe. It can be equipped with probes that are unaffected by high and narrow openings or nearby objects.

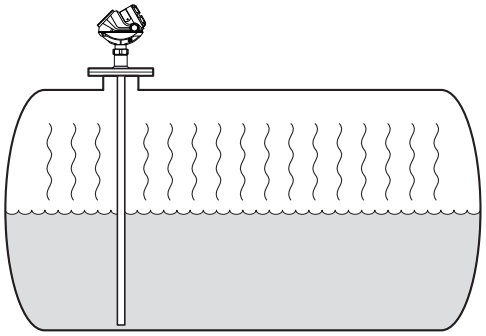

Guided wave radar technology provides reliable measurements in ammonia, LNG and LPG tanks.

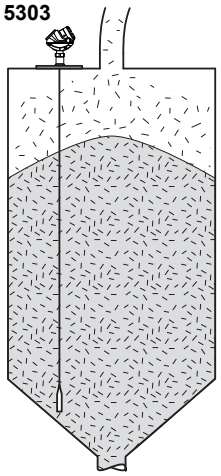

Model 5303, with a flexible single lead probe, is the solution for solids, powders and granules. It measures independently of dust, angled surfaces etc.

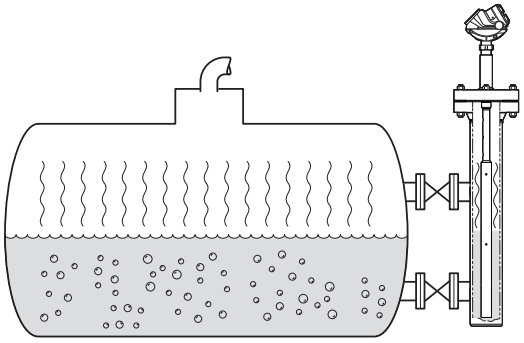

The Rosemount 5300 Series with Dynamic Vapor Compensation will automatically compensate for dielectric changes in high pressure steam applications and maintain the level accuracy.

2.3 Components of the transmitter

The Rosemount 5300 Series Radar Transmitter has an aluminum or stainless steel (SST) *transmitter housing* containing advanced electronics and software for signal processing. SST housing is preferred for harsh environment applications, such as off-shore platforms or other locations where the housing can be exposed to corrodents, such as salt solutions and caustics.

The *radar electronics* produces an electromagnetic pulse that is guided by the *probe*. It comes with flange, threaded or Tri-Clamp process connection.

There are different probe types available for various applications: rigid twin lead, flexible twin lead, rigid single lead, flexible single lead, and coaxial.

Figure 2-3. Transmitter components

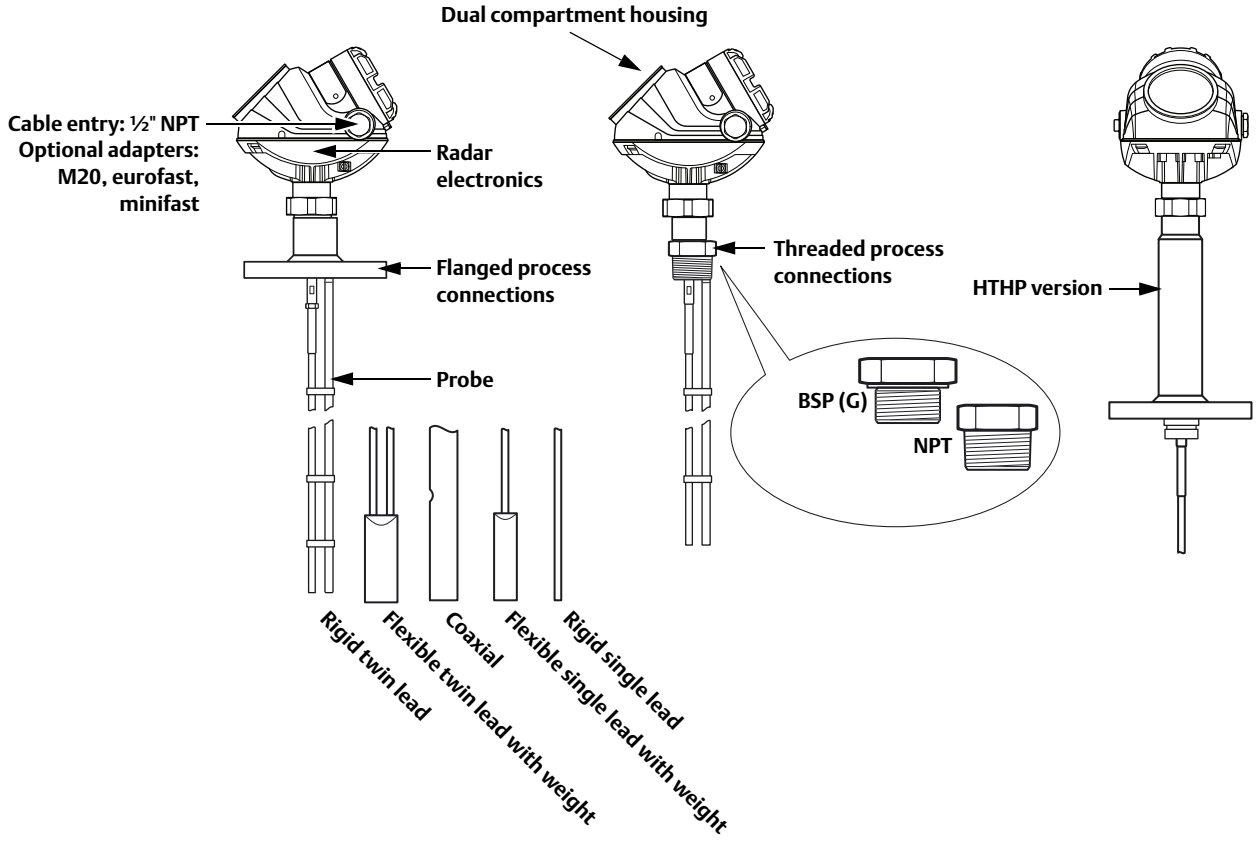

Remote housing allows for the transmitter head to be mounted separately from the probe.

Figure 2-4. Remote housing components

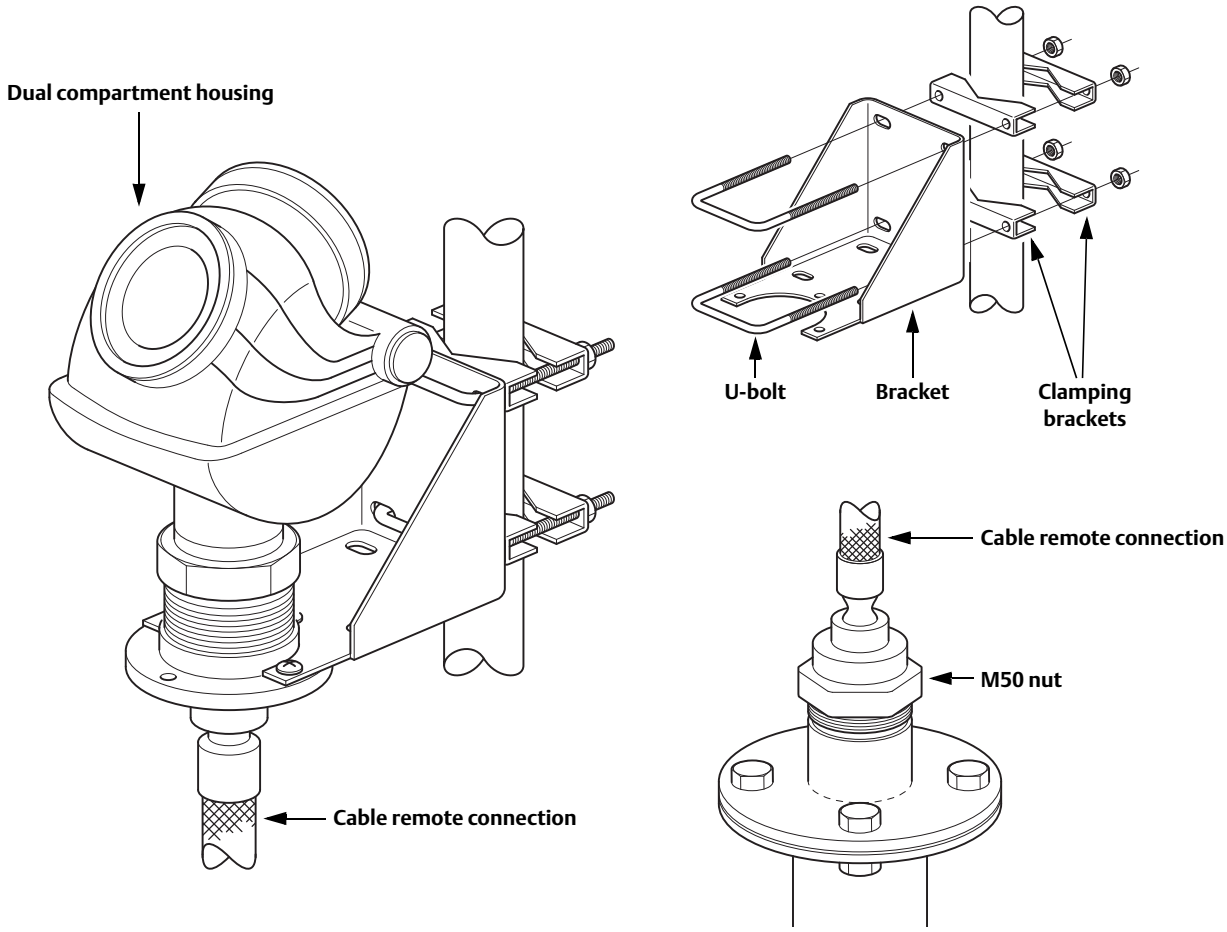

2.4 System architecture

The Rosemount 5300 Series Radar Transmitter is loop-powered, and it uses the same two wires for both power supply and output signal. The output is a 4-20 mA analog signal superimposed with a digital HART® or FOUNDATION™ fieldbus signal.

By using the optional Rosemount 333 HART Tri-loop, the HART signal can convert up to three additional 4-20 mA analog signals.

With the HART protocol multidrop configuration is possible. In this case, communication is restricted to digital, since current is fixed to the 4 mA minimum value.

The transmitter can be connected to a Rosemount 751 Field Signal Indicator, or it can be equipped with an integral display.

The transmitter can easily be configured using a Rosemount Field Communicator or a PC with the Rosemount Radar Master software. Rosemount 5300 Series transmitters can also be configured with the AMS® Suite and DeltaV™ software, and other tools supporting Electronic Device Description Language (EDDL) functionality.

For HART communication a minimum load resistance of 250 Ω within the loop is required.

Figure 2-5. HART system architecture

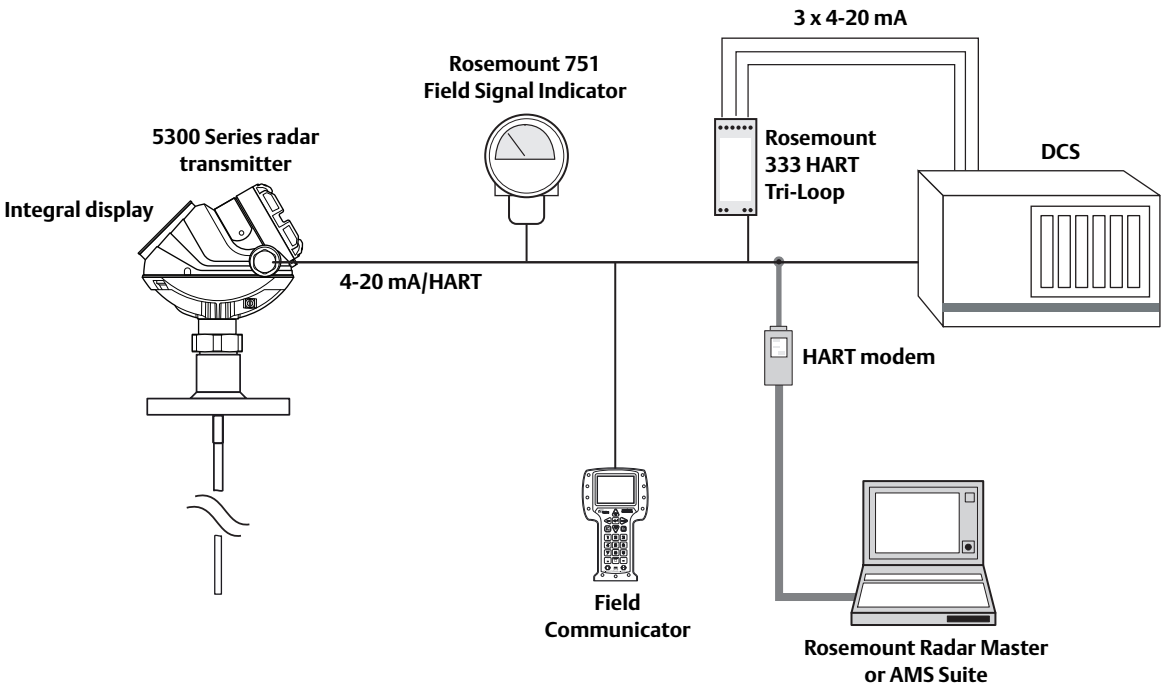

NOTE:
For HART communication, a minimum load resistance of 250 Ω within the loop is required.

Figure 2-6. FOUNDATION fieldbus system architecture

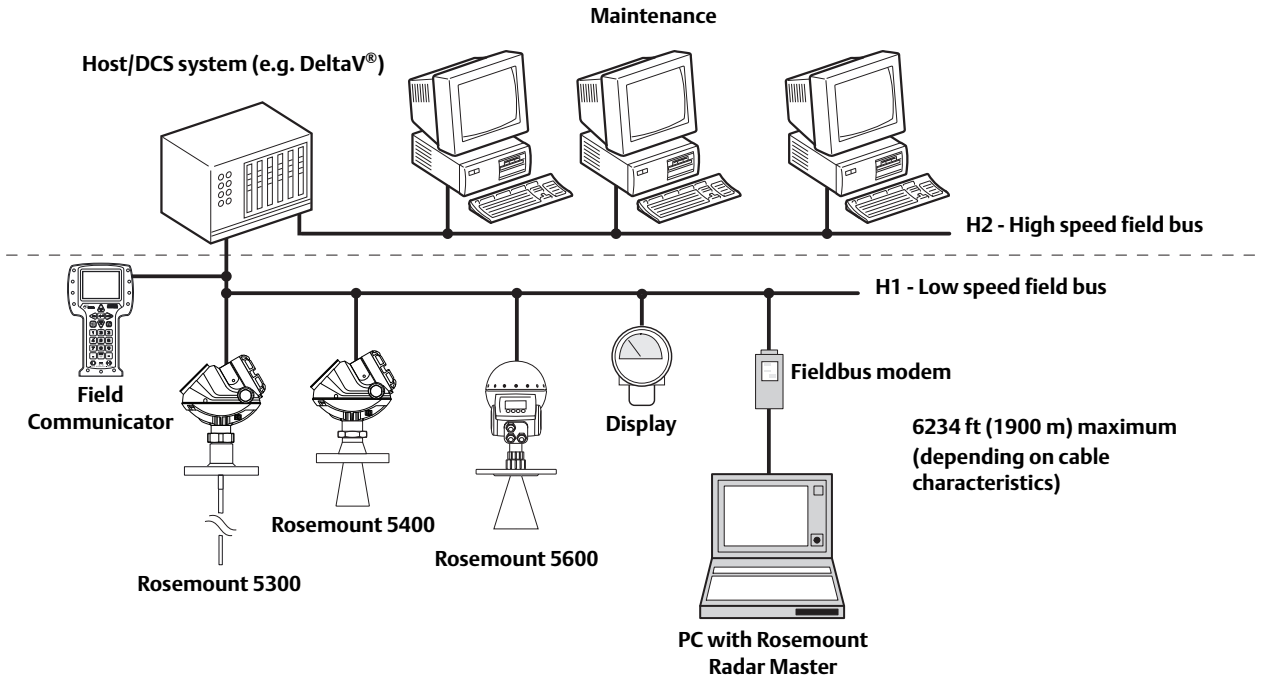

NOTE:
Intrinsically safe installations may allow fewer devices per I.S. barrier due to current limitations.

2.5 Probe selection guide

The following guidelines should be used to choose the appropriate probe for the Rosemount 5300 transmitter:

	Rigid single lead	Flexible single lead	Coaxial	Rigid twin lead	Flexible twin lead
G = Good NR = Not Recommended AD = Application Dependent (consult your local Emerson Process Management representative)				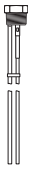	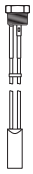
Measurements					
Level	G	G	G	G	G
Interface (liquid/liquid)	G	G	G	G	G
Process medium characteristics					
Changing density	G	G	G	G	G
Changing dielectric(1)	G	G	G	G	G
Wide pH variations	G	G	G	G	G
Pressure changes	G	G	G	G	G
Temperature changes	G	G	G	G	G
Condensing vapors	G	G	G	G	G
Bubbling/boiling surfaces	G	AD	G	G	G
Foam (mechanical avoidance)	NR	NR	AD	NR	NR
Foam (top of foam measurement)	AD	AD	NR	AD	AD
Foam (foam and liquid measurement)	AD	AD	NR	AD	AD
Clean liquids	G	G	G	G	G
Liquid with very low dielectric constants, see also Table A-1.	G	G(2)	G	G	G(2)
Coating/sticky liquids	AD	AD	NR	NR	NR
Viscous liquids	AD	G	NR	AD	AD
Crystallizing liquids	AD	AD	NR	NR	NR
Solids, granules, powders	AD	G	NR	NR	NR
Fibrous liquids	G	G	NR	NR	NR
Tank Environment Considerations					
Probe is close (<12 in./30 cm) to tank wall / disturbing objects	AD	AD	G	G	G
Probe might touch tank wall, nozzle or disturbing objects	NR	NR	G	NR	NR
Turbulence	G	AD	G	G	AD
Turbulent conditions causing breaking forces	NR	AD	NR	NR	AD
Tall, narrow nozzles	AD	AD	G	AD	AD
Angled or slanted surface (viscous or solids materials)	G	G	NR	AD	AD
Liquid or vapor spray might touch probe above surface	NR	NR	G	NR	NR
Disturbing Electromagnetic interference in tank	AD	AD	G	AD	AD
Cleanability of probe	G	G	NR	AD	AD

(1) For overall level applications, a changing dielectric has no effect on the measurement. For interface measurements, a changing dielectric for the top fluid will degrade the accuracy of the interface measurement.

(2) Limited measuring range.

2.6 Measuring range

The measuring range depends on probe type, dielectric constant of the product and installation environment, and is limited by the Blind Zones at the very top and bottom of the probe. In the Blind Zones, the accuracy exceeds ±1.18 in. (30 mm), and measurements may not be possible. Measurements close to the Blind Zones will have reduced accuracy.

Figure 2-7 illustrates how the measuring range is related to the Blind Zones and the areas with reduced accuracy. Values for different probe types and dielectric constants are presented in section "Accuracy over measuring range" on page 206.

Figure 2-7. Blind Zones and areas with reduced accuracy

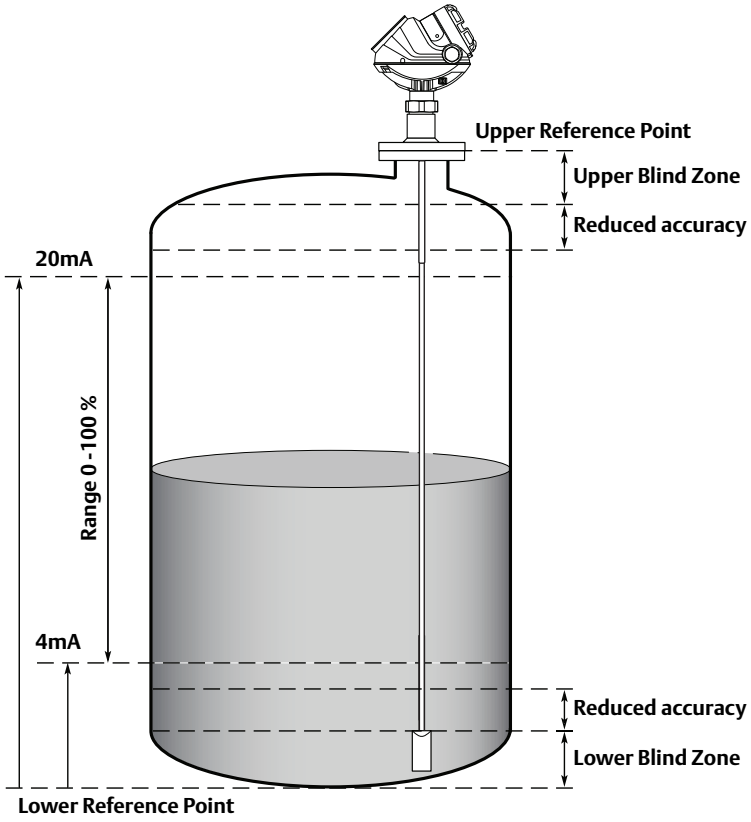

NOTE:
Measurements may not be possible in the Blind Zones, and measurements close to the Blind Zones will have reduced accuracy. Therefore, the 4-20 mA points should be configured outside these zones.

2.7 Process characteristics

The Rosemount 5300 Series has high sensitivity because of its advanced signal processing and high signal to noise ratio. This makes it able to handle various disturbances, however, the following circumstances should be considered before mounting the transmitter.

2.7.1 Coating

Heavy coating of the probe should be avoided since it may decrease the sensitivity of the transmitter and lead to measurement errors. In viscous or sticky applications, periodic cleaning may be required.

For viscous or sticky applications, it is important to choose a suitable probe:

Table 2-1. Probe type guide for different product viscosity

Coaxial	Twin lead	Single lead
Maximum viscosity		
500 cP	1500 cP	8000 cP(1)(2)
Coating/Build-up		
Coating not recommended	Thin coating allowed, but no bridging	Coating allowed

(1) Consult your local Emerson Process Management representatvie for agitation/turbulence and high viscous products.
(2) Be precautious in HTHP viscous or crystallizing media applications where temperature at instrument connection is significantly lower than process temperature with risk of coating in the upper part of probe that may reduce the measurement signal. Consider using HP or STD probes in such applications.

Maximum measurement error due to coating is 1-10% depending on probe type, dielectric constant, coating thickness and coating height above product surface.

Signal Quality Metrics (SQM) diagnostic option can give an indication of how good the surface signal is compared to the noise, and when to clean the probe.

2.7.2 Bridging

Heavy product coating results in bridging between the two probes in a twin lead version, or between the pipe and inner rod for coaxial probes, and may cause erroneous level readings, so it must be prevented. A single lead probe is recommended in these situations.

2.7.3 Foam

The Rosemount 5300 Series Radar Transmitter measurement in foamy applications depends on the foam properties; light and airy or dense and heavy, high or low dielectrics, etc. If the foam is conductive and creamy, the transmitter may measure the surface of the foam. If the foam is less conductive the microwaves may penetrate the foam and measure the liquid surface.

2.7.4 Vapor

In some applications, such as high pressure boiling water, there is a heavy vapor above the product surface that could influence the level measurement. The Rosemount 5300 Series Radar Transmitter can be configured to compensate for the influence of vapor.

2.7.5 Boiling hydrocarbons

For products with very low dielectric constants, such as boiling hydrocarbons and solids, the threshold may need to be lowered, and/or the Probe End Projection (PEP) function activated.

2.7.6 Interface

Rosemount 5302 is the ideal choice for measuring the level of oil, and the interface of oil and water, or other liquids with significant dielectric differences. Rosemount 5301 can also be used for interface measurement in applications where the probe is fully submerged in the liquid.

Figure 2-8. Interface measurement with a Rosemount 5302 and a Rosemount 5301 (fully submerged probe)

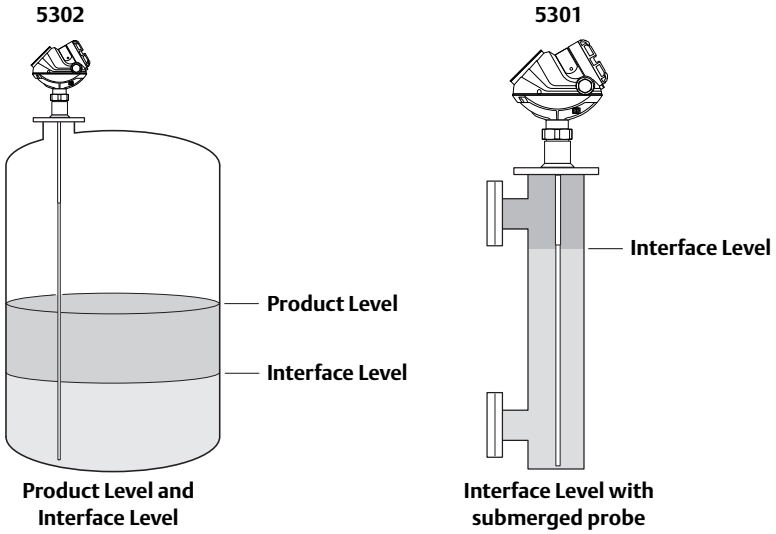

For measuring interface level, the transmitter uses the residual wave of the first reflection. Part of the wave, not reflected at the upper product surface, continues until it is reflected at the lower product surface. The speed of this wave depends fully on the dielectric constant of the upper product.

To measure interface, the following criteria have to be fulfilled:

- The dielectric constant of the upper product must be known and should be constant. The Rosemount Radar Master software has a built-in dielectric constant calculator to assist in determining the dielectric constant of the upper product. (see "Dielectric constant/dielectric range" on page 109)
- The upper product must have a lower dielectric constant than the lower product to have a distinct reflection
- The difference between the dielectric constants for the two products must be greater than 6
- The maximum dielectric constant for the upper product: 10 for the coaxial probe, 7 for the twin lead, and 8 for the single lead probes
- The upper product thickness must be greater than 5.1 in. (0.13 m) for all probes, except the HTHP coaxial probe, which requires 8 in. (0.2 m), to distinguish the echoes of the two liquids

The maximum allowable upper product thickness/measuring range is primarily determined by the dielectric constants of the two liquids.

Target applications include interfaces between oil / oil-like and water / water-like liquids with a low (<3) dielectric constant for the upper product and a high (>20) dielectric constant for the lower product.

For such applications, the maximum measuring range is limited by the length of the coaxial, rigid twin, and rigid single lead probes.

For flexible probes, the maximum measuring range is reduced by the maximum upper product thickness, according to the diagram below. However, characteristics may vary between the different applications.

Figure 2-9. Maximum upper product thickness for the flexible single lead probe

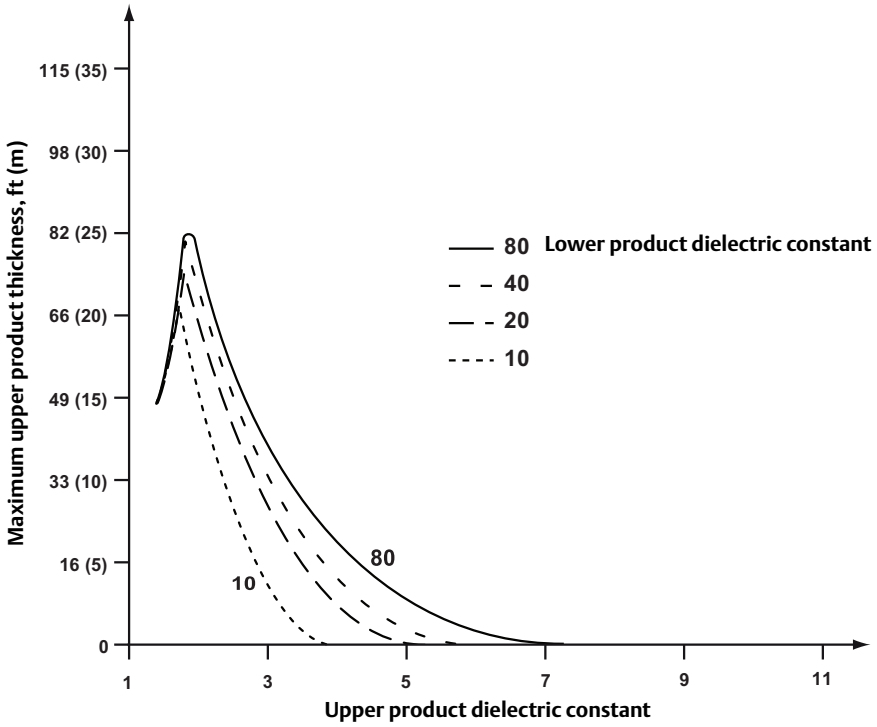

Figure 2-10. Maximum upper product thickness for the flexible twin lead probe

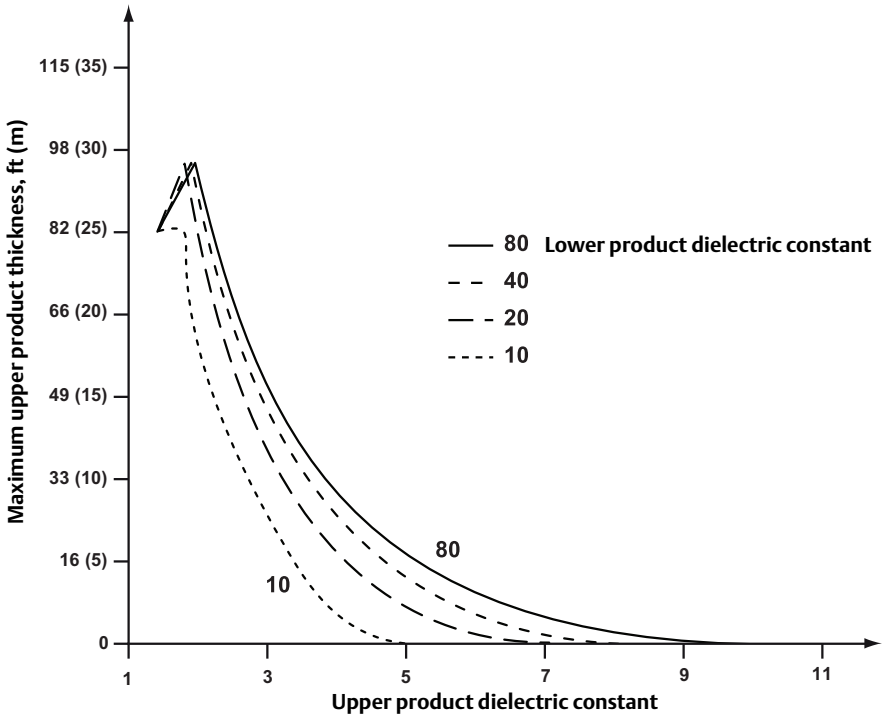

NOTE:
Maximum distance to the interface = 164 ft.(50 m) - maximum upper product thickness

Emulsion layers

Sometimes an emulsion layer (mix of the products) forms between the two products and can affect interface measurements. For assistance with emulsion applications, consult your local Emerson Process Management representative.

2.8 Vessel characteristics

2.8.1 Heating coils, agitators

Because the radar signal is transmitted along a probe, the Rosemount 5300 Radar transmitter is generally not affected by objects in the tank. Avoid physical contact with metallic objects when twin lead or single lead probes are used.

Avoid physical contact between probes and agitators, as well as applications with strong fluid movement, unless the probe is anchored. If the probe is able to move 1 ft. (30 cm) from any object, such as an agitator, during operation, the probe tie-down is recommended.

To stabilize the probe for side forces, a weight may be hung at the probe end (flexible probes only) or fix/guide the probe to the tank bottom.

2.8.2 Tank shape

The guided wave radar transmitter is insensitive to tank shape. Since the radar signal travels along a probe, the shape of the tank bottom has virtually no effect on the measurement performance. The transmitter can handle flat or dish-bottom tanks.

2.9 Installation procedure

Follow these steps for proper installation:

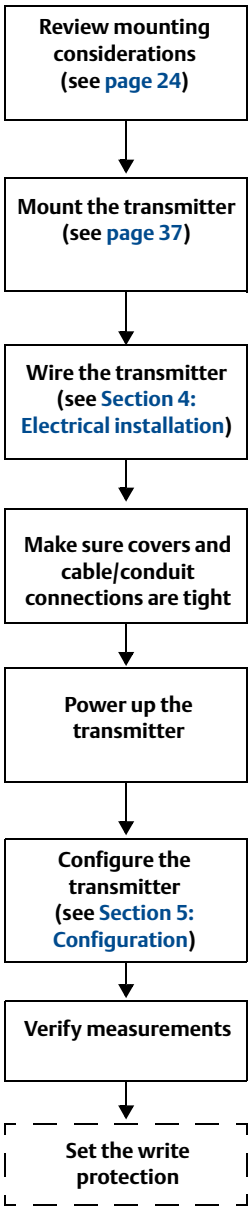

Section 3 Mechanical installation

Safety messages ..... page 23
Mounting considerations ..... page 24
Mounting ..... page 37

3.1 Safety messages

Procedures and instructions in this section may require special precautions to ensure the safety of the personnel performing the operations. Information that raises potential safety issues is indicated by a warning symbol (⚠). Please refer to the following safety messages before performing an operation preceded by this symbol.

⚠ WARNING

Failure to follow safe installation and servicing guidelines could result in death or serious injury.

Make sure only qualified personnel perform the installation.

Use the equipment only as specified in this manual. Failure to do so may impair the protection provided by the equipment.

Do not perform any services other than those contained in this manual unless you are qualified.

Process leaks could result in death or serious injury.

Make sure that the transmitter is handled carefully. If the Process Seal is damaged, gas might escape from the tank if the transmitter head is removed from the probe.

⚠ WARNING

High voltage that may be present on leads could cause electrical shock.

Probes covered with plastic and/or with plastic discs may generate an ignition-capable level of electrostatic charge under certain extreme conditions. Therefore, when the probe is used in a potentially explosive atmosphere, appropriate measures must be taken to prevent electrostatic discharge.

Eliminate the risk of Electrostatic Discharge (ESD) discharge prior to dismounting the transmitter head. Probes may generate an ignition-capable level of electrostatic charge under extreme conditions. During any type of installation or maintenance in a potentially explosive atmosphere, the responsible person should make sure that any ESD risks are eliminated before attempting to separate the probe from the transmitter head.

⚠ WARNING

Any substitution of non-authorized parts or repair, other than exchanging the complete transmitter head or probe assembly, may jeopardize safety and is prohibited.

Unauthorized changes to the product are strictly prohibited as they may unintentionally and unpredictably alter performance and jeopardize safety. Unauthorized changes that interfere with the integrity of the welds or flanges, such as making additional perforations, compromise product integrity and safety. Equipment ratings and certifications are no longer valid on any products that have been damaged or modified without the prior written permission of Emerson Process Management. Any continued use of product that has been damaged or modified without prior written authorization is at the customer's sole risk and expense.

3.2 Mounting considerations

Before installing the Rosemount 5300 Series Radar Transmitter, consider specific mounting requirements, vessel and process characteristics.

For remote housing installation see Appendix D: Remote mounting.

3.2.1 Process connection

The Rosemount 5300 Series has a threaded connection for easy mounting on a tank roof. It can also be mounted on a nozzle by using different flanges.

Threaded connection

Figure 3-1. Mounting on tank roof using threaded connection

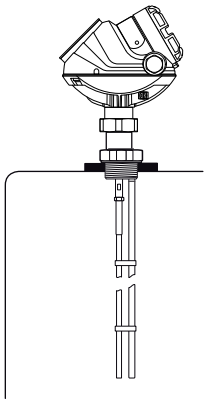

Flange connection on nozzles

Figure 3-2. Mounting in nozzles

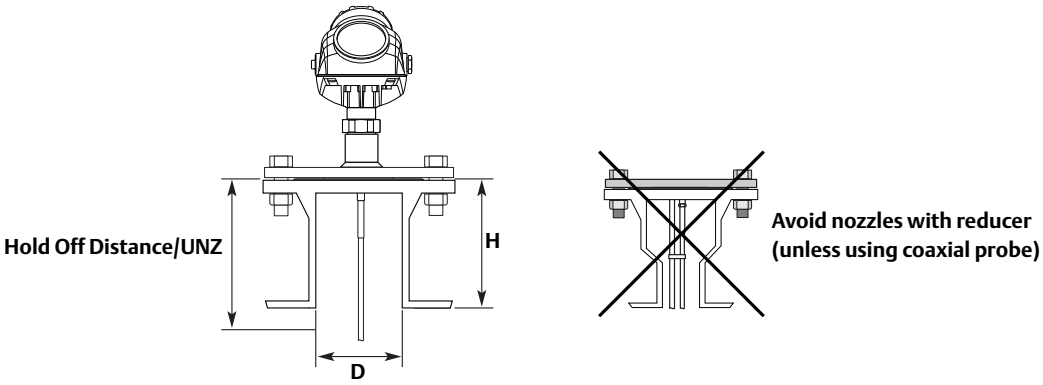

The transmitter can be mounted in nozzles by using an appropriate flange. The nozzle sizes given in Table 3-1 show the recommended dimensions. For small nozzles, it may be necessary to increase the Hold Off Distance/Upper Null Zone (UNZ) to reduce the measuring range in the upper part of the tank. Amplitude Threshold adjustments may also be needed in this case. A Trim Near Zone is recommended in most nozzle installations, for example, when there are disturbing obstacles in the near zone. See Appendix C: Handling of disturbances from nozzle on page 280.

NOTE:
The probe should not contact the nozzle, with the exception of the Coaxial Probe. If the nozzle diameter is less than recommended, the measuring range may be reduced.

Table 3-1. Nozzle considerations

	Single (rigid/flexible)	Coaxial	Twin (rigid/flexible)
Recommended nozzle diameter (D)	6 in. (150 mm)	> probe diameter	4 in. (100 mm)
Minimum nozzle diameter (D)[1]	2 in. (50 mm)	> probe diameter	2 in. (50 mm)
Recommended nozzle height (H)[2]	4 in. (100 mm) + nozzle diameter[3]	N/A	4 in. (100 mm) + nozzle diameter

(1) The Trim Near Zone (TNZ) function may be necessary or an Hold Off Distance/Upper Null Zone (UNZ) setup may be required to mask the nozzle.
(2) Longer nozzles may be used in certain applications. Consult your local Emerson Process Management representative for details.
(3) For nozzles taller than 4 in. (100 mm), the Long Stud version is recommended (option code LS) to prevent the flexible portion from touching the edge of the nozzle.

A long stud - 10 in. (250 mm) - is recommended for single flexible probes in a tall nozzle.

Figure 3-3. A single flexible probe with a long stud

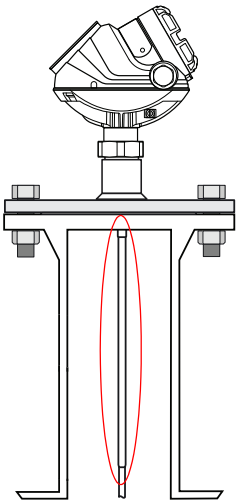

NOTE:
For single lead probes, avoid 10-in. (250 mm)/DN250 or larger diameter nozzles, especially in applications with low dielectric constant. An alternative is to install a smaller nozzle inside the nozzle.

3.2.2 Installation of single lead probes in non-metallic vessels

For optimal single lead probe performance in non-metallic (plastic) vessels, the probe must be mounted with a metal flange, or screwed in to a metal sheet (d>8 in./200 mm), if the threaded version is used.

Figure 3-4. Mounting in non-metallic vessels

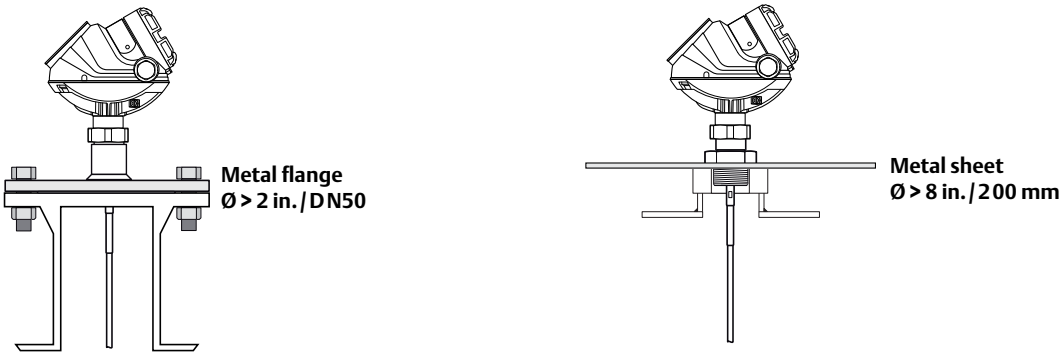

Electromagnetic disturbances should be kept to a minimum since they may affect measurement performance.

3.2.3 Installation in concrete silos

Figure 3-5. Installation in concrete silos

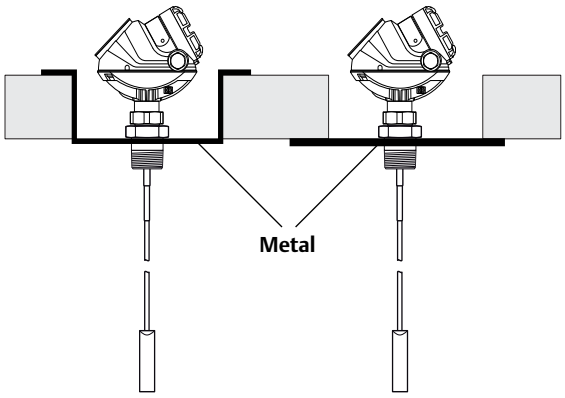

3.2.4 Considerations for solid applications

The flexible single lead probe is recommended for solids and is available in two versions to handle different loads and lengths:

- 0.16 in. (4 mm) diameter
  Tensile strength is minimum 2698 lb (12 kN)
  Collapse load is maximum 3597 lb (16 kN)
- 0.24 in. (6 mm) diameter
  Tensile strength is minimum 6519 lb (29 kN)
  Collapse load is maximum 7868 lb (35 kN)

Keep the following in mind when planning installation of the Rosemount 5300 in solid applications:

- There might be considerable down-pull forces on silo roofs caused by the media, so the silo roof must withstand the maximum probe tensile load.
- The tensile load depends on silo size, material density, and the friction coefficient. Forces increase with the buried length, the silo, and probe diameter.
- In critical cases, such as for products with a risk for build-up, use a 0.24 in. (6 mm) probe
- Depending on position, forces on probes are two to ten times greater on probes with tie-down, than on probes with ballast weights[(1)].
- PTFE coated probes are not recommended for solid applications.

Guidelines for the tensile load from free-flowing solids acting on a suspended probe without any tie-down or weight in a smooth metallic wall silo as shown in Table 3-2. A safety factor of 2 is included for the figures. Consult your local Emerson Process Management representative for more information.

(1) The weight should not be fixed for probe 100 ft (30 m) or longer.

Table 3-2. Pulling force on probe installed in tanks with different products

Material	Tensile load for 0.16 in. (4 mm) flexible single lead probe, lb (kN)				Tensile load for 0.24 in. (6 mm) flexible single lead probe, lb (kN)			
	Probe length 49 ft (15 m)		Probe length 115 ft (35 m)		Probe length 49 ft (15 m)		Probe length 115 ft (35 m)	
	Tank Ø= 10 ft (3 m)	Tank Ø= 39 ft (12 m)	Tank Ø= 10 ft (3 m)	Tank Ø= 39 ft (12 m)	Tank Ø= 10 ft (3 m)	Tank Ø= 39 ft (12 m)	Tank Ø= 10 ft (3 m)	Tank Ø= 39 ft (12 m)
Wheat	670 (3)	1120 (5)	1800 (8)	4500 (20) Exceeds tensile strength limit	900 (4)	1690 (7.5)	2810 (12.5)	6740 (30) Exceeds tensile strength limit
Polypropylene Pellets	340 (1.5)	670 (3)	810 (3.6)	2360 (10.5)	450 (2)	920(4.1)	1190 (5.3)	3510 (15.6)
Cement	900 (4)	2020 (9)	2470 (11)	7310 (32.5) Exceeds tensile strength limit	1350 (6)	2920 (13)	3600 (16)	10790 (48) Exceeds tensile strength limit

NOTE:
For environments where electrostatic discharges are likely to occur, such as plastic pellets, it is recommended that the probe end is grounded.

3.2.5 Mounting in chamber/still pipe

The chamber is also known as bridle, side pipe, bypass pipe, and cage. Dimensioning the chamber correctly and selecting the appropriate probe is key to the success in these applications.

To prevent the probe from contacting the wall, centering discs are available for the rigid single, flexible single, and flexible twin lead probes. The disc is attached to the end of the probe, and thus keeps the probe centered in the chamber. See also "Mounting a centering disc for pipe installations" on page 47.

Figure 3-6. Prevent the probe from contacting the wall

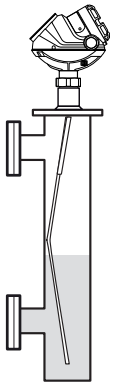

Make sure that the probe does not come into contact with the chamber wall, e.g. by using a centering disk.

NOTE:
Metal pipes are preferred, especially in applications with low dielectric constant, to avoid disturbances from objects near the pipe.

Figure 3-7. Mounting single probe in chamber/still pipe

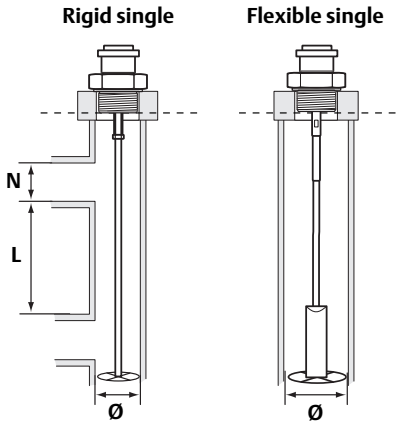

Inlet pipe diameter N < Ø. Effective measuring range L ≥12 in. (300 mm).

Table 3-3. Recommended and minimum chamber/still pipe diameters for different probes

Probe type	Recommended diameter	Minimum diameter
Rigid single	3 or 4 in. (75 or 100 mm)	2 in. (50 mm)
Flexible single	4 in. (100 mm)	Consult your local Emerson Process Management representative
Rigid twin(1)	3 or 4 in. (75 or 100 mm)	2 in. (50 mm)
Flexible twin(1)	4 in. (100 mm)	Consult your local Emerson Process Management representative
Coaxial	3 or 4 in. (75 or 100 mm)	1.5 in. (37.5 mm)

(1) The center rod must be placed more than 0.6 in. (15 mm) away from the pipe wall.

The recommended chamber diameter is 3 in. (75 mm) or 4 in. (100 mm). Chambers with a diameter less than 3 in. (75 mm) may cause problems with build-up and it may also be difficult to avoid contact between chamber wall and probe. Chambers larger than 6 in. (150 mm) can be used but provide no advantages for radar measurement.

It is recommended that single probes are used with the Rosemount 5300 Series. Other probe types are more susceptible to build-up and are not recommended.(1) An exception is with liquefied gas > 40 bar when the coaxial probe should be used.

The probe must not touch the chamber wall, should extend the full height of the chamber, but not touch the bottom of the chamber. Probe type selection depends on probe length:

(1) The single probe creates a virtual coaxial probe with the chamber as the outer tube. The extra gain provided by the twin and coaxial probes is not necessary; the electronics in the Rosemount 5300 Series is very sensitive and is not a limiting factor.

Less than 14.7 ft (4.5 m): Rigid single probe is recommended. Use a centering disc for a probe > 3.3 ft. (1 m). If installation requires less head-space, use a flexible single probe with a weight and centering disc.(1)

More than 14.7 ft (4.5 m): Use flexible single probe with a weight and centering disc.

A short weight for the single flexible 0.16 in. (4 mm) SST probe can be used for measuring close to the probe end. The height is 2 in. (50 mm) and the diameter is 1.5 in. (37.5 mm). Option code W2.

For hot applications, the chamber should always be insulated to prevent personal injuries and to reduce the amount of energy needed for heating. See Figure 3-8. It is often an advantage, and sometimes even required, for the radar measurement:

- In hot applications, insulation reduces the amount of condensation, since it prevents the upper part of the chamber from becoming a cold spot
- Insulation prevents product solidification inside the chamber, and clogging of the inlet-pipes

Figure 3-8. Insulated chamber

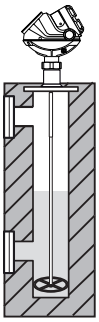

See page 36 for more information.

When mounting in a Rosemount 9901 chamber, the probe length to use can be calculated with these formulas:

Side-and-side dimension: probe length = centre-to-centre dimension + 19 in. (48 cm)

Side-and-bottom dimension: probe length = centre-to-centre dimension + 4 in. (10 cm)

(1) The blind zones and the height of the weight limit the use of single flexible probes shorter than 3 ft. (1 m). If using the flexible probe, the short weight is recommended.

Figure 3-9. Side-and-side and side-and-bottom chambers

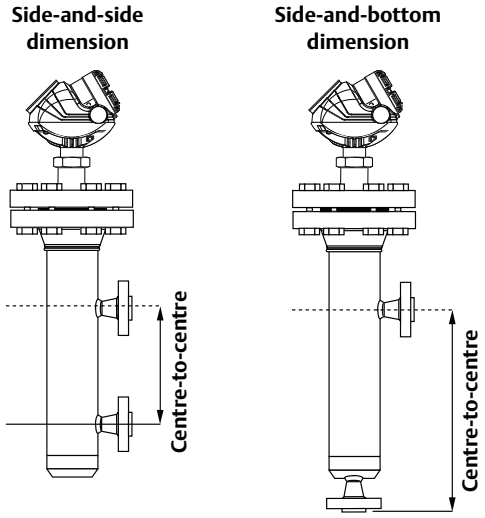

NOTE:
The formulas are not valid when using Dynamic Vapor Compensation probes.

3.2.6 Replacing a displacer in an existing displacer chamber

A Rosemount 5300 Series transmitter is the perfect replacement for an existing displacer chamber. To simplify installation, proprietary flanges are offered to allow for using the same chambers.

Figure 3-10. Replacing a displacer in an existing displacer chamber

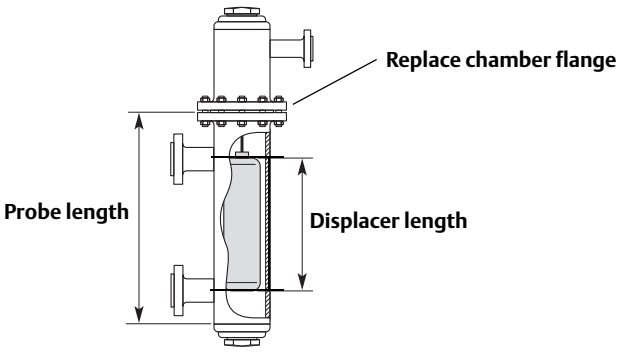

Rosemount 5300 benefits

- No moving parts: Less maintenance - dramatically reduced costs, and as a result, improved measurement availability
- Reliable measurement, that is independent of density, turbulence, and vibrations

Considerations when changing to Rosemount 5300

When changing from a displacer to a Rosemount 5300 Series transmitter, make sure to correctly match the 5300 Series flange choice and probe length to the chamber. Both standard ANSI and EN (DIN), as well as proprietary chamber flanges are available.

Table 3-4 shows probe length guidelines.

Table 3-4. Required probe length depending on chamber manufacturers

Chamber manufacturer	Probe length(1)
Major torque-tube manufacture (249B, 249C, 249K, 249N, 259B)	Displacer + 9 in. (229 mm)
Masoneilan (Torque tube operated), proprietary flange	Displacer + 8 in. (203 mm)
Others - torque tube(2)	Displacer + 8 in. (203 mm)
Magnetrol (spring operated)(3)	Displacer + between 7.8 in. (195 mm) to 15 in. (383 mm)
Others - spring operated	Displacer + 19.7 in. (500 mm)

(1) If flushing ring is used, add 1 in. (25 mm).
(2) For other manufacturers, there are small variations. This is an approximate value, actual length should be verified.
(3) Lengths vary depending on model, SG and rating, and should be verified.

3.2.7 Free space

For easy access to the transmitter, make sure it is mounted with sufficient service space. For maximum measurement performance, the transmitter should not be mounted close to the tank wall or near other objects in the tank.

If the probe is mounted close to a wall, nozzle or other tank obstruction, noise may appear in the level signal. The minimum clearance shown in Table 3-5 and Table 3-6 is recommended:

Figure 3-11. Free space requirement

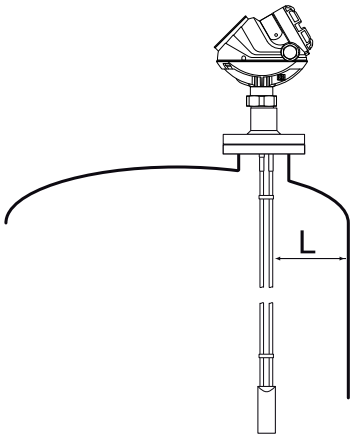

Table 3-5. Recommended minimum free space L to tank wall or other objects in the tank

Coaxial	Rigid twin	Flexible twin
0 in. (0 mm)	4 in. (100 mm)	4 in. (100 mm)

Table 3-6. Recommended minimum free space L to tank wall or other objects in the tank for single lead probes

Rigid single/flexible single	
4 in. (100 mm)	Smooth metal wall.
20 in. (500 mm)(1)	Disturbing objects such as pipes and beams, concrete or plastic tank walls, rugged metal tank walls.

(1) When measuring in low DC (around 1.4). For higher DC, the recommended free space is lower.

3.2.8 Recommended mounting position for liquids

Tank conditions are recommended to be carefully considered when finding the appropriate mounting position for the transmitter. The transmitter should be mounted so the influence of disturbing objects is reduced to a minimum.

In case of turbulence, the probe may need to be anchored to the bottom. See "Anchoring" on page 44 for more information.

Figure 3-12. Mounting position

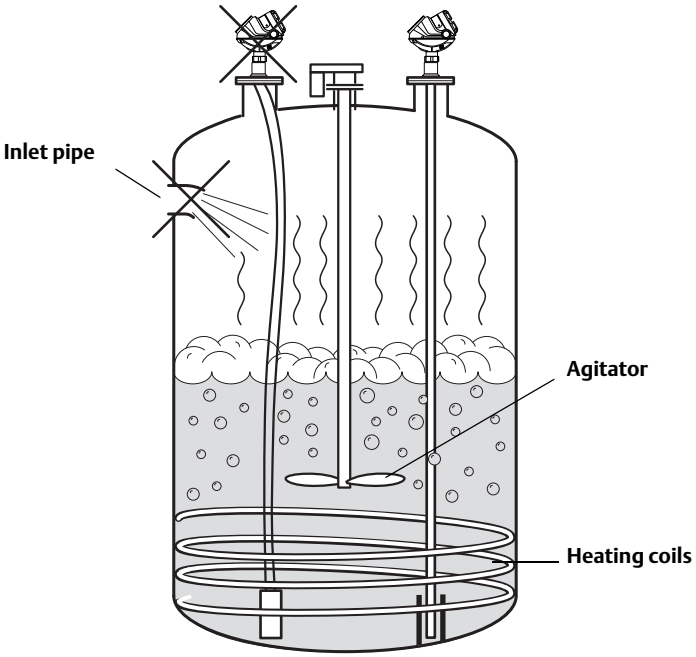

When mounting the transmitter the following guidelines should be considered:

- Do not mount close to inlet pipes
- Do not mount close to agitators. If the probe can move to within 30 cm away from an agitator, a probe tie-down is recommended
- If the probe tends to sway from the turbulent conditions in the tank, the probe should be anchored to the tank bottom
- Avoid mounting near heating coils
- The nozzle should not extend into the tank
- The probe should not come into contact with the nozzle or other objects in the tank
- Position the probe so it is subject to a minimum of lateral force

NOTE:
Violent fluid movements can cause forces that could break rigid probes.

3.2.9 Recommended mounting for solids

Figure 3-13. Recommended mounting for solids

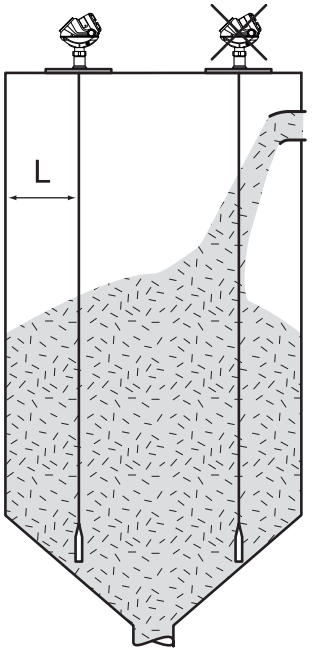

Consider the following guidelines when mounting the transmitter:

- Do not mount near inlet pipes in order to avoid product filling on the probe
- Regularly check the probe for defects
- It is recommended that the vessel be empty during installation
- For concrete vessels, the distance (L) between the probe and the wall should be at least 20 in. (500 mm)
- Stabilize the probe for side forces, by attaching the probe to the tank bottom. For solids, use the 0.24 in. (6 mm) probe, because of the higher tensile strength. The probe should have a sag of ≥ 1 in./100 in. (1 cm/m) to prevent probe damage. See "Anchoring" on page 44 for more information
- Avoid anchoring in solids tanks over 98 ft (30 m) in height since tensile loads are much stronger for anchored probes, see "Considerations for solid applications" on page 27
- Product build-up on the silo walls near the probe may interfere with measurements. Choose a mounting position where the probe is not in contact with, or close to, the product build-up

3.2.10 Insulated tanks

When the Rosemount 5300 is installed in high temperature applications, consider the maximum ambient temperature. Tank insulation should not exceed 4 in. (10 cm) above the top of the process connection.

Figure 3-14. Tank insulation

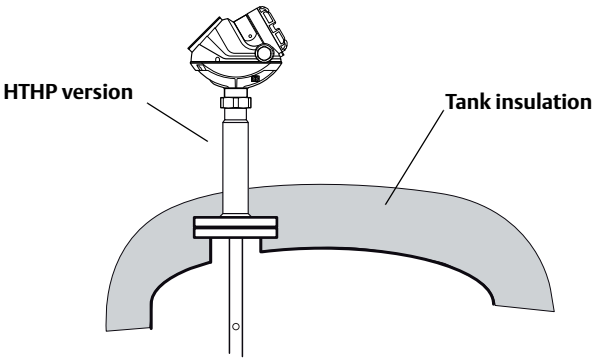

Figure 3-15. Ambient temperature vs. process temperature

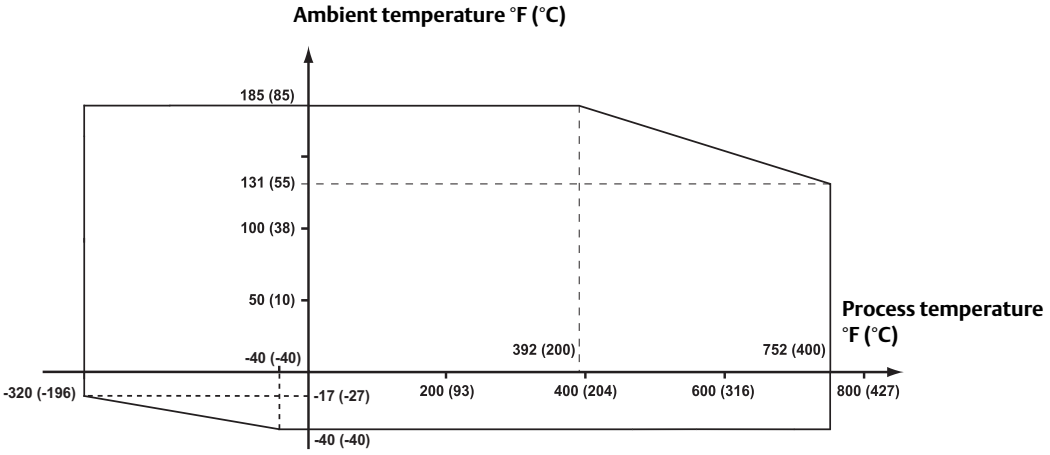

3.3 Mounting

Mount the transmitter with flange on a nozzle on top of the tank. The transmitter can also be mounted on a threaded connection. Make sure only qualified personnel perform the installation.

NOTE:
If you need to remove the transmitter head from the probe, make sure that the process seal is carefully protected from dust and water. See "Removing the transmitter head" on page 164 for further information.

NOTE:
PTFE covered probes must be handled carefully to prevent damage to the coating.

3.3.1 Flange connection

Figure 3-16. Tank connection with flange

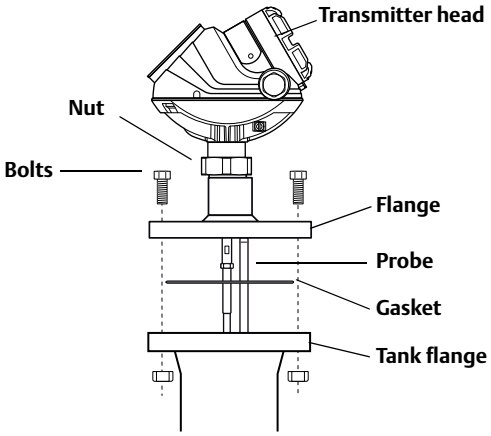

The transmitter is delivered with head, flange, and probe assembled into one unit.

1. Place a gasket on top of the tank flange.
2. Lower the transmitter and probe with flange into the tank.
3. Tighten the bolts.
4. Loosen the nut that connects the transmitter housing to the probe slightly.
5. Rotate the transmitter housing so the cable entries/display face the desired direction.
6. Tighten the nut. Max torque is 30 Lbft (40 Nm).

Figure 3-17. Tank connection with loose flange ("plate design")

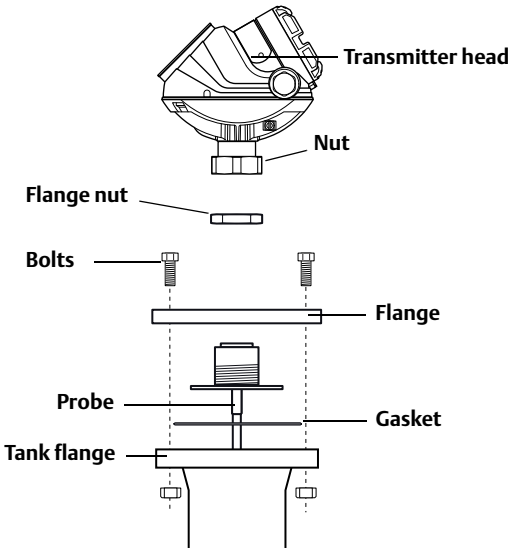

Transmitters delivered with Alloy probes featuring plate design are mounted as described below:

1. Place a gasket on top of the tank flange.
2. Mount(1) the flange on the probe and tighten the flange nut.
3. Mount(1) the transmitter head.
4. Lower the transmitter and probe with flange into the tank.
5. Tighten the bolts.
6. Loosen the nut that connects the transmitter housing to the probe slightly.
7. Rotate the transmitter housing so the cable entries/display face the desired direction.
8. Tighten the nut. Max torque is 30 Lbft (40 Nm).

(1) Flange and transmitter head are normally mounted at the factory.

3.3.2 Threaded connection

Figure 3-18. Threaded tank connection

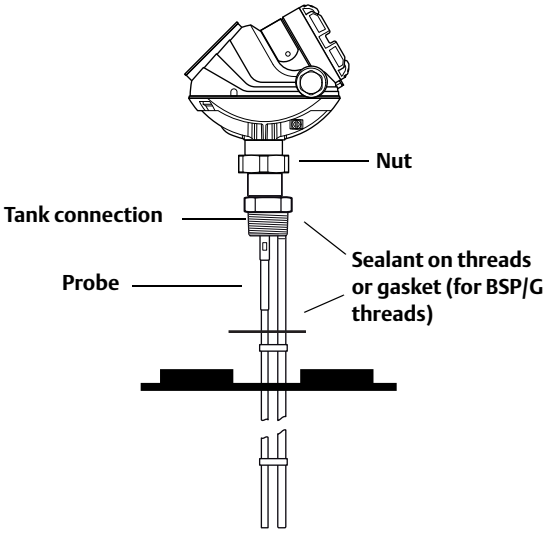

1. For tank connections with BSP/G threads, place a gasket on top of the tank flange, or use a sealant on the threads of the tank connection.
2. Lower the transmitter and probe into the tank.
3. Screw the adapter into the process connection.
4. Loosen the nut that connects the transmitter housing to the probe slightly.
5. Rotate the transmitter housing so the cable entries/display face the desired direction.
6. Tighten the nut. Max torque is 30 Lbft (40 Nm).

NOTE:
For adapters with NPT threads, pressure-tight joints require a sealant.

3.3.3 Tri-Clamp connection

Figure 3-19. Tri-Clamp tank connection

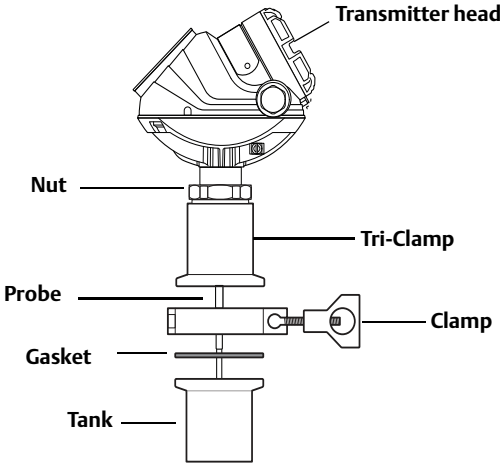

1. Place a gasket on top of the tank flange.
2. Lower the transmitter and probe into the tank.
3. Fasten the Tri-Clamp to the tank with a clamp.
4. Loosen the nut that connects the transmitter housing to the probe slightly.
5. Rotate the transmitter housing so the cable entries/display face the desired direction.
6. Tighten the nut. Max torque is 30 Lbft (40 Nm).

3.3.4 Bracket mounting

1. Mount the bracket to the pole.
   a. Put the two U-bolts through the holes of the bracket. Several holes are available for vertical/horizontal pipe mounting.
   b. Put the clamping brackets on the U-bolts and around the pipe.
   c. Use the supplied nuts to fasten the bracket to the pipe.

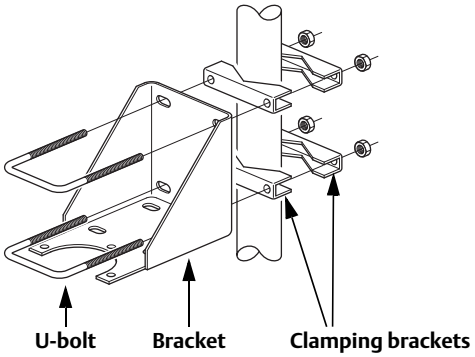

2. Fasten the housing support to the bracket using the M6 screws.

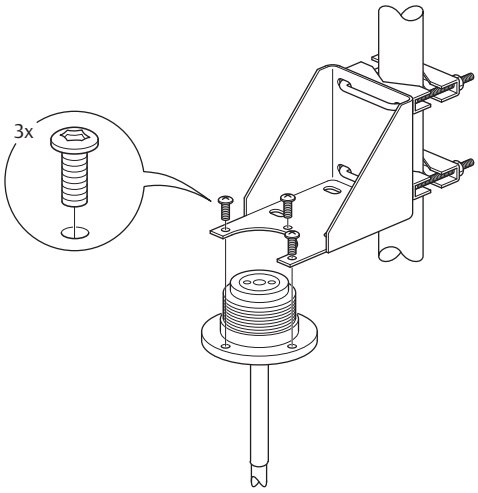

3. Connect the transmitter head on the probe. Tighten the M50 nut.
   Max torque is 30 Lbft (40 Nm).

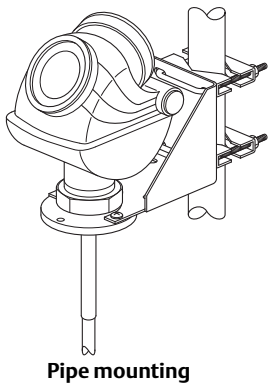

Pipe mounting (vertical pipe)

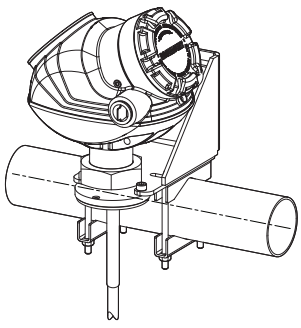

Pipe mounting (horizontal mounting)

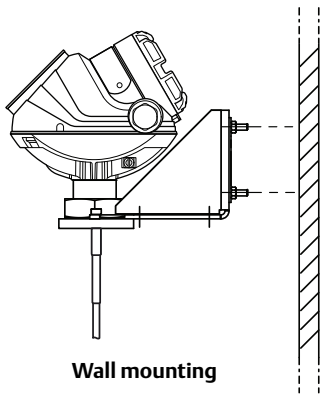

Wall mounting

3.3.5 Shortening the probe

NOTE:
HTHP Coaxial and PTFE probes must not be shortened.

Flexible twin/single lead

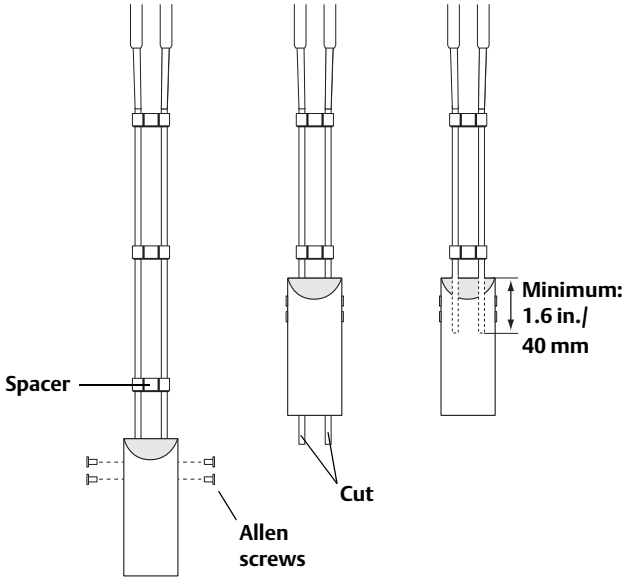

1. Mark off the required probe length. Add at least 1.6 in. (40 mm) to the required probe length to be inserted into the weight.
2. Loosen the Allen screws.
3. Slide the weight upwards as much as needed in order to cut the probe.
4. Cut the probe. If necessary, remove a spacer to make room for the weight.
5. Slide the weight down to the required cable length.
6. Tighten the screws. Required torque:

   M6: 7 Nm
   M8: 15 Nm
   M10: 25 Nm

7. Update the transmitter configuration to the new probe length, see "Tank and probe geometry" on page 74 and "Probe" on page 93.

If the weight was removed from the cables when cutting, make sure that at least 1.6 in. (40 mm) of the cable is inserted when the weight is replaced.

NOTE:
If the screws are not tightened according to the required torque, the weight may fall off. This is especially important for solid applications with high tensile loads on the probe.

Rigid single lead

1. Cut the single lead probe to the desired length. The minimum probe length is 15.7 in. (400 mm).
2. If a centering disc is used, follow the instructions on page 49.
3. Update the transmitter configuration to the new probe length, see "Tank and probe geometry" on page 74 and "Probe" on page 93.

Rigid twin lead

The spacers are put closer together at the probe end. The maximum amount that can be cut is related to the ordering length L.

To cut a rigid twin lead probe:

L > 46.5 in. (1180 mm)

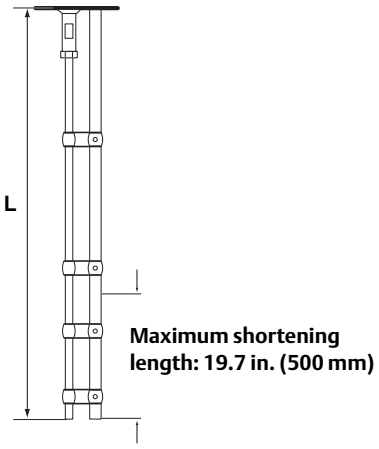

1. Cut the rods to the desired length:
   - You may cut up to 19.7 in. (500 mm) from the probe end for probe length L above 46.5 in. (1180 mm)
   - For probe length 20.5 to 46.5 in. (520 to 1180 mm) the minimium length is 20.5 in. (520 mm)
   - For probe length 15.7 to 20.5 in. (400 to 520 mm) the minimium length is 15.7 in. (400 mm)

20.5 < L < 46.5 in.

(520 mm < L < 1180 mm)

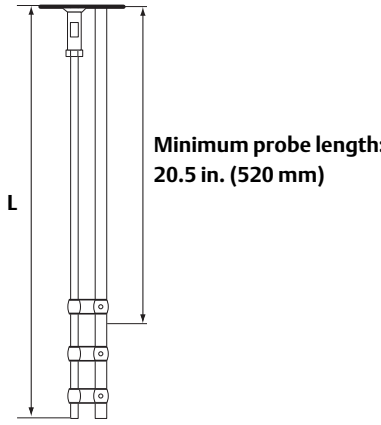

2. Update the transmitter configuration to the new probe length, see "Tank and probe geometry" on page 74 and "Probe" on page 93.

15.7 < L < 20.5 in.

(400 < L < 520 mm)

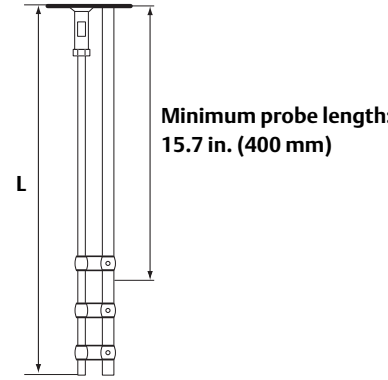

Coaxial

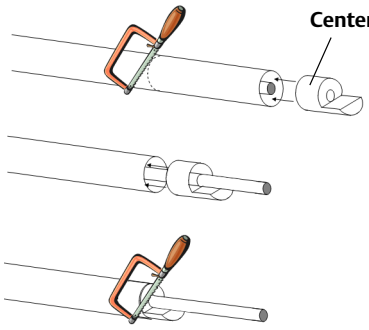

To cut a coaxial probe:

NOTE:
The HTHP coaxial probe must not be cut in field.

1. Insert the centering piece.
   (The centering piece is delivered from factory and should be used to prevent the spacers centering the rod from coming loose).
2. Cut the tube to the desired length.
3. Move the centering piece.
4. Cut the rod inside the tube. Make sure that the rod is fixed with the centering piece while cutting.
   - Pipes longer than 49 in. (1250 mm) can be shortened by as much as 23.6 in. (600 mm)
   - Pipes shorter than 49 in. (1250 mm) can be cut as long as the remaining length is not less than 15.7 in. (400 mm)

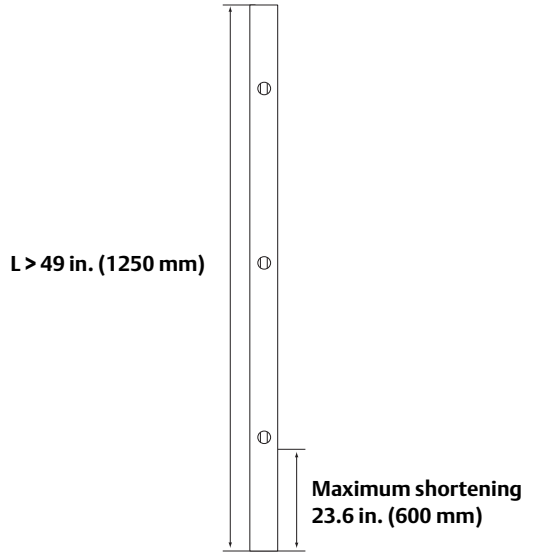

5. Update the transmitter configuration to the new probe length, see "Tank and probe geometry" on page 74 and "Probe" on page 93.

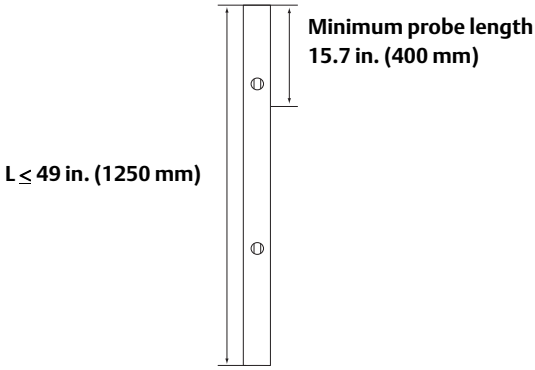

3.3.6 Anchoring

In turbulent tanks, it may be necessary to fix the probe. Depending on the probe type, different methods can be used to guide the probe to the tank bottom. This may be needed to prevent the probe from hitting the tank wall or other objects in the tank, as well as preventing a probe from breaking.

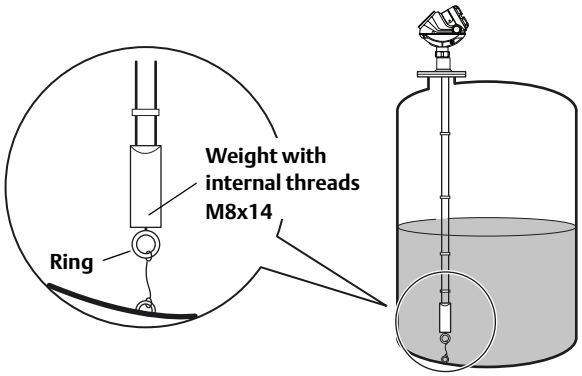

Flexible twin/single lead probe with weight and ring

A ring (customer supplied) can be attached to the weight in a threaded (M8x14) hole at the end of the weight. Attach the ring to a suitable anchoring point.

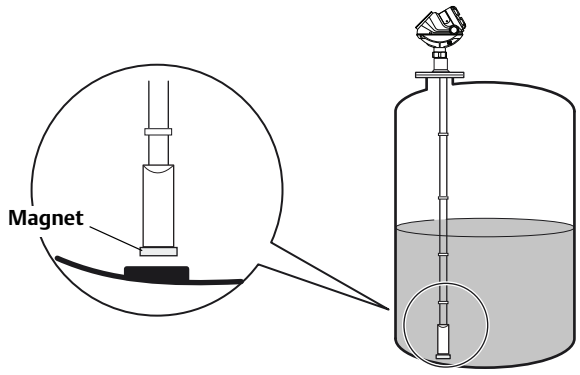

Flexible twin/single lead probe with weight and magnet

A magnet (customer supplied) can be fastened in a threaded (M8x14) hole at the end of the weight. The probe can then be guided by placing a suitable metal plate beneath the magnet.

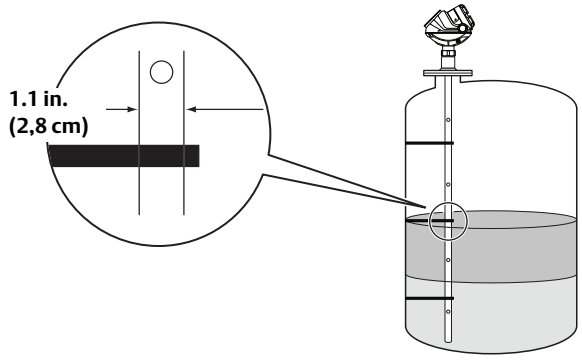

Coaxial probe fixed to the tank wall

The coaxial probe can be guided to the tank wall by fixtures fastened to the tank wall. Fixtures are customer supplied. Make sure the probe can move freely due to thermal expansion without getting stuck in the fixture.

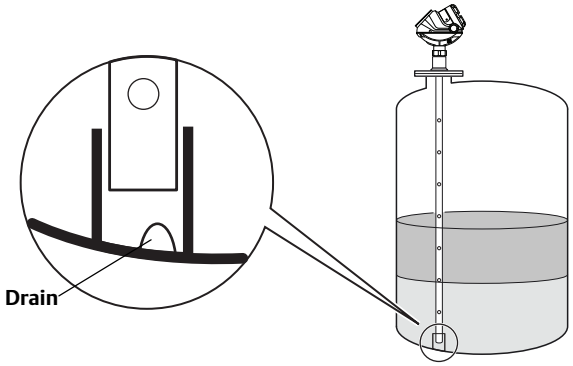

Coaxial probe

The coaxial probe can be guided by a tube welded on the tank bottom. Tubes are customer supplied. Make sure that the probe can move freely in order to handle thermal expansion.

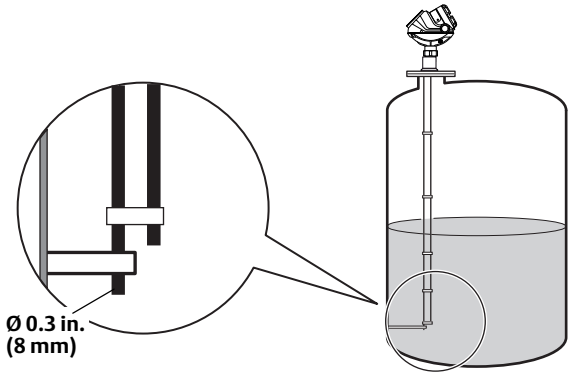

Rigid twin lead probe

The rigid twin lead probe can be secured to the tank wall by cutting the center rod and putting a fixture at the end of the outer rod.

The fixture is customer supplied. Make sure the probe is only guided and not fastened in the fixture to be able to move freely for thermal expansion.

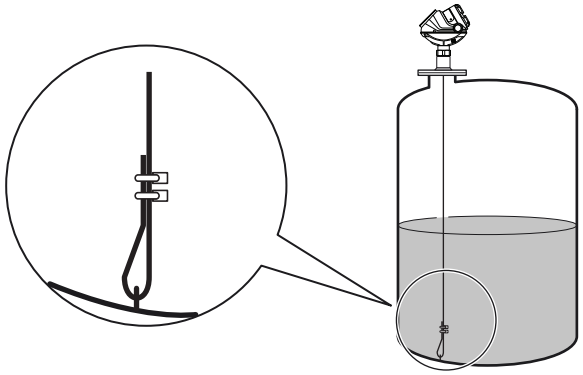

Flexible single lead probe

The probe rope itself can be used for anchoring. Pull the probe rope through a suitable anchoring point, e.g. a welded eye and fasten it with two clamps.

The length of the loop will add to the Blind Zone.The location of the clamps will determine the beginning of the Blind Zone. The probe length should be configured as the length from the underside of the flange to the top clamp. See section "Accuracy over measuring range" on page 206 for further information on Blind Zones.

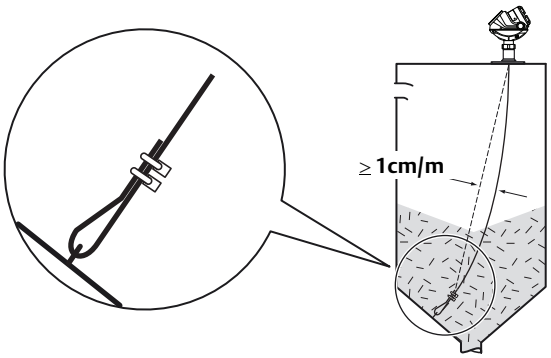

Solid applications

Pull the probe rope through a suitable anchoring point, e.g. a welded eye and fasten it with two clamps. It is recommended that the probe is slack in order to prevent high tensile loads.

The sag should be at least 1.5 in./10 ft (1 cm/m) of the probe length.

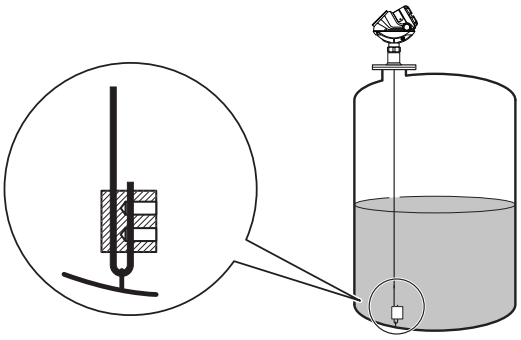

Alternative chuck for flexible single lead probes

Loosen the screws. Pull the probe rope through a suitable anchoring point, e.g. a welded eye.

Tighten the screws. The required torque and hex key dimensions:
4 mm wire: 15 Nm, 4 mm
6 mm wire: 25 Nm, 5 mm

3.3.7 Mounting a centering disc for pipe installations

To prevent the probe from contacting the bridle wall when replacing displacers or installing in pipes, centering discs are available for rigid single, flexible single, and flexible twin lead probes. The disc is attached to the end of the probe and thus keeps the probe centered in the bridle. The discs are made of stainless steel, Alloy C-276, or PTFE.

When mounting a centering disc, it is important that it fits correctly in the pipe. See Table 3-7 for the appropriate disc diameters.

Table 3-7. Choose the right centering disc diameter for a particular pipe schedule

Pipe size	Pipe schedule					
	5s,5	10s,10	40s,40	80s,80	120	160
2 in.	2 in.	2 in.	2 in.	2 in.	NA(1)	NA(2)
3 in.	3 in.	3 in.	3 in.	3 in.	NA(1)	2 in.
4 in.	4 in.	4 in.	4 in.	4 in.	4 in.	3 in.
5 in.	4 in.	4 in.	4 in.	4 in.	4 in.	4 in.
6 in.	6 in.	6 in.	6 in.	6 in.	4 in.	4 in.
7 in.	NA(1)	NA(1)	6 in.	6 in.	NA(1)	NA(1)
8 in.	8 in.	8 in.	8 in.	8 in.	6 in.	6 in.

(1) Schedule is not available for pipe size.
(2) No centering disc is available.

Table 3-8 shows the actual outer diameter for discs.

Table 3-8. Outer diameter for discs according to disc size

Disc size	Actual disc diameter
2 in.	1.8 in. (45 mm)
3 in.	2.7 in. (68 mm)
4 in.	3.6 in. (92 mm)
6 in.	5.55 in. (141 mm)
8 in.	7.4 in. (188 mm)

To avoid bending the probe (rigid probes), or twisting and coming into contact with the chamber wall (flexible probes), a small clearance distance between centering disk and chamber bottom is recommended. The clearance distance of 1 in. (25 mm) is selected with a dome shaped chamber bottom in mind, which may prevent the centering disk from reaching the bottom.

Figure 3-20. Clearance distance between the probe end and the chamber bottom

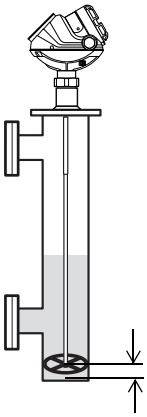

Mounting a centering disc on flexible single probes

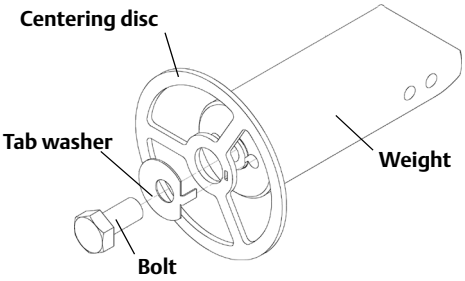

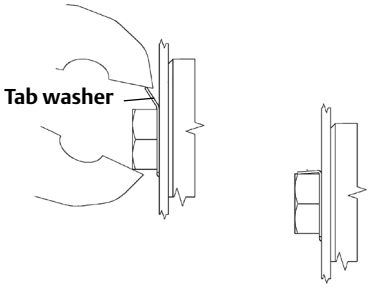

1. Mount the centering disc at the end of the weight.
2. Make sure that the tab washer is properly inserted in the centering disc.
3. Fasten the centering disc with the bolt.
4. Secure the bolt by folding the tab washer.

NOTE:
When using centering discs made of PTFE, note that the maximum temperature is 392 °F (200 °C).

Mounting a centering disc on rigid single probes

The mounting of a centering disc on a rigid single lead probe requires one hole (8 mm probe) or two holes (13 mm probe) at certain distances from the end of the lead. The drilling fixture included in your shipment should be used to make the hole(s) according to Figure 3-21.

Table 3-9. Hole requirements on probes for mounting a centering disc

Probe	Minimum distance to hole from probe end	Number of holes	Hole diameter
8 mm	5 mm	1	3.5 mm
13 mm	7 mm (first hole)	2	3.5 mm

Figure 3-21. Use drill template for proper holes

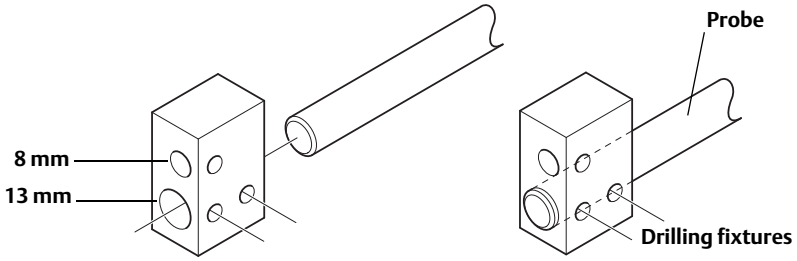

Rigid single lead probe (13 mm)

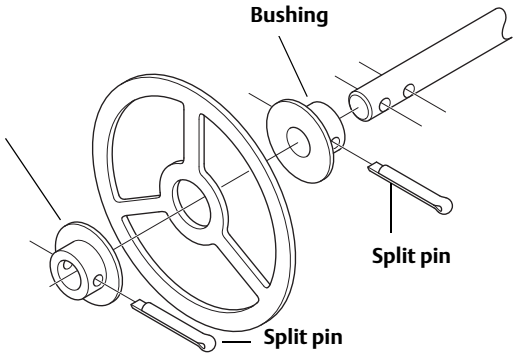

1. Mount the centering disc at the end of the probe.
2. Fasten the disc by inserting the split pins through the bushings and the probe.

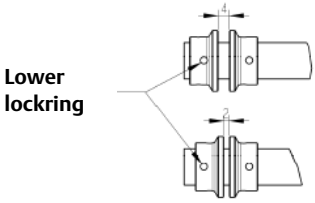

3. Adjust distance by shifting hole for split pin in lower lockring.

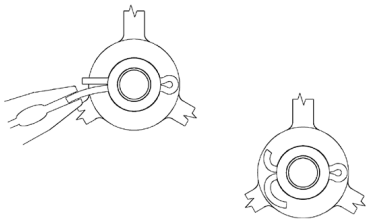

4. Secure the split pin.

Rigid single lead probe (8 mm)

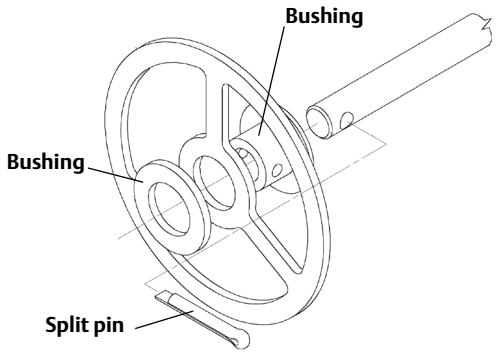

1. Mount the centering disc at the end of the probe.
2. Fasten the disc by inserting the split pin through the bushing and the probe.

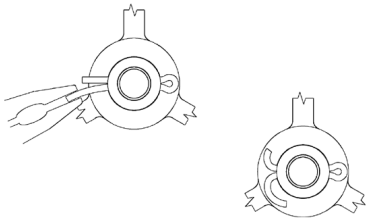

3. Secure the split pin.

NOTE:
The washer should not be used if the disc material is C-276.

NOTE:
Centering discs may not be used with PTFE covered probes.

Section 4 Electrical installation

Safety messages ..... page 53
Cable/conduit entries ..... page 54
Grounding ..... page 54
Cable selection ..... page 55
Hazardous areas ..... page 55
HART ..... page 55
Foundation fieldbus ..... page 60
Optional devices ..... page 65

4.1 Safety messages

Procedures and instructions in this section may require special precautions to ensure the safety of the personnel performing the operations. Information that raises potential safety issues is indicated by a warning symbol (⚠). Please refer to the following safety messages before performing an operation preceded by this symbol.

⚠ WARNING

Explosions could result in death or serious injury.

Verify that the operating environment of the transmitter is consistent with the appropriate hazardous locations certifications.

Before connecting a HART®-based communicator in an explosive atmosphere, make sure the instruments in the loop are installed in accordance with intrinsically safe or non-incendive field wiring practices.

Do not remove the gauge cover in explosive atmospheres when the circuit is alive.

⚠ WARNING

Failure to follow safe installation and servicing guidelines could result in death or serious injury.

Make sure only qualified personnel perform the installation.

Use the equipment only as specified in this manual. Failure to do so may impair the protection provided by the equipment.

Do not perform any service other than those contained in this manual unless you are qualified.

Process leaks could result in death or serious injury.

Make sure that the transmitter is handled carefully. If the Process Seal is damaged, gas might escape from the tank if the transmitter head is removed from the probe.

⚠ WARNING

High voltage that may be present on leads could cause electrical shock.

Avoid contact with leads and terminals.

Make sure the main power to the Rosemount 5300 transmitter is off and the lines to any other external power source are disconnected or not powered while wiring the gauge.

Probes covered with plastic and/or with plastic discs may generate an ignition-capable level of electrostatic charge under certain extreme conditions. Therefore, when the probe is used in a potentially explosive atmosphere, appropriate measures must be taken to prevent electrostatic discharge.

4.2 Cable/conduit entries

The electronics housing has two entries for ½ - 14 NPT. Optional M20×1.5, minifast and eurofast adapters are also available. The connections are made in accordance with local or plant electrical codes.

Make sure that unused ports are properly sealed to prevent moisture or other contamination from entering the terminal block compartment of the electronics housing.

NOTE:
Use the enclosed metal plug to seal the unused port. The orange plastic plugs mounted at delivery are not sufficient as seal!

4.3 Grounding

The housing should always be grounded in accordance with national and local electrical codes. Failure to do so may impair the protection provided by the equipment. The most effective grounding method is direct connection to earth ground with minimal impedance. There are two grounding screw connections provided. One is inside the field terminal side of the housing and the other is located on the housing. The internal ground screw is identified by a ground symbol: ⏚.

NOTE:
Grounding the transmitter via threaded conduit connection may not provide sufficient ground.

NOTE:
In the explosion-proof/flameproof version, the electronics is grounded via the transmitter housing. After installation and commissioning make sure that no ground currents exist due to high ground potential differences in the installation.

4.4 Cable selection

Use shielded twisted pair wiring for the Rosemount 5300 Series to comply with EMC regulations. The cables must be suitable for the supply voltage and approved for use in hazardous areas, where applicable. For instance, in the U.S., explosion-proof conduits must be used in the vicinity of the vessel. For the ATEX flameproof and the IECEx approval versions of the Rosemount 5300 Series, suitable conduits with sealing device or flameproof (EEx d) cable glands must be used depending on local requirements.

Use 18 AWG to 12 AWG to minimize the voltage drop to the transmitter.

4.5 Hazardous areas

When the Rosemount 5300 transmitter is installed in a hazardous area, local regulations and specifications in applicable certificates must be observed.

4.6 HART

4.6.1 Power requirements

Terminals in the transmitter housing provide connections for signal cables. The Rosemount 5300 transmitter is loop-powered and operates with the following power supplies:

	Current	
	3.75 mA	**21.75 mA**
Hazardous approval	**Minimum input voltage (U_I)**	
Non-hazardous installations and intrinsically safe installations	16 Vdc	11 Vdc
Explosion-proof / flameproof installations	20 Vdc	15.5 Vdc

The input voltage for HART is 16-42.4 Vdc (16-30 Vdc in IS applications, and 20-42.4 Vdc in Explosion-proof / flameproof applications).

4.6.2 Maximum loop resistance

The maximum current loop resistance (see Figure 4-5 and Figure 4-6) is given by the following diagrams:

Figure 4-1. Explosion-proof / flameproof installations

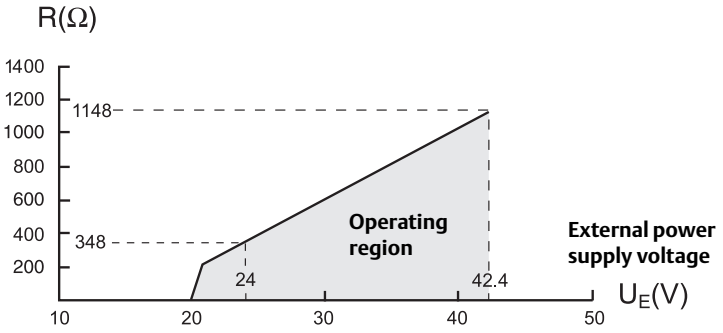

NOTE
This diagram is only valid if the load resistance is at the + side and if the - side is grounded, otherwise the maximum load resistance is limited to 435 **Ω**.

Figure 4-2. Non-hazardous installations

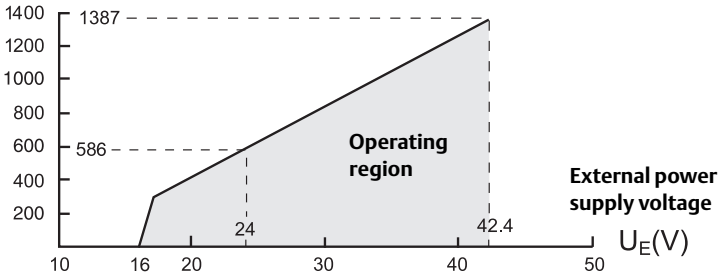

Figure 4-3. Intrinsically safe installations

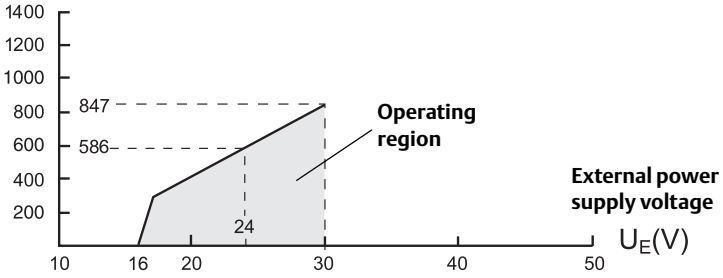

4.6.3 Connecting the transmitter

To connect the Rosemount 5300 Series transmitter:

1. Make sure the power supply is switched off.
2. Remove the terminal block cover.
3. Pull the cable through the cable gland/conduit. Install wiring with a drip loop. The bottom of the loop must be lower than the cable/conduit entry.
4. Connect wires according to Figure 4-5 for non-intrinsically safe power supplies and according to Figure 4-6 for intrinsically safe power supplies.
5. Use the enclosed metal plug to seal any unused port.
6. ⚠ Mount the cover and tighten the cable gland making sure the cover is secure to meet explosion-proof requirements.
7. For ATEX, IECEx and NEPSI installations, lock the cover with the locking screw ④.
8. Connect the power supply.

NOTE:
Use PTFE tape or other sealant at the NPT threads in the cable entries.

Figure 4-4. Terminal compartment and external ground screw

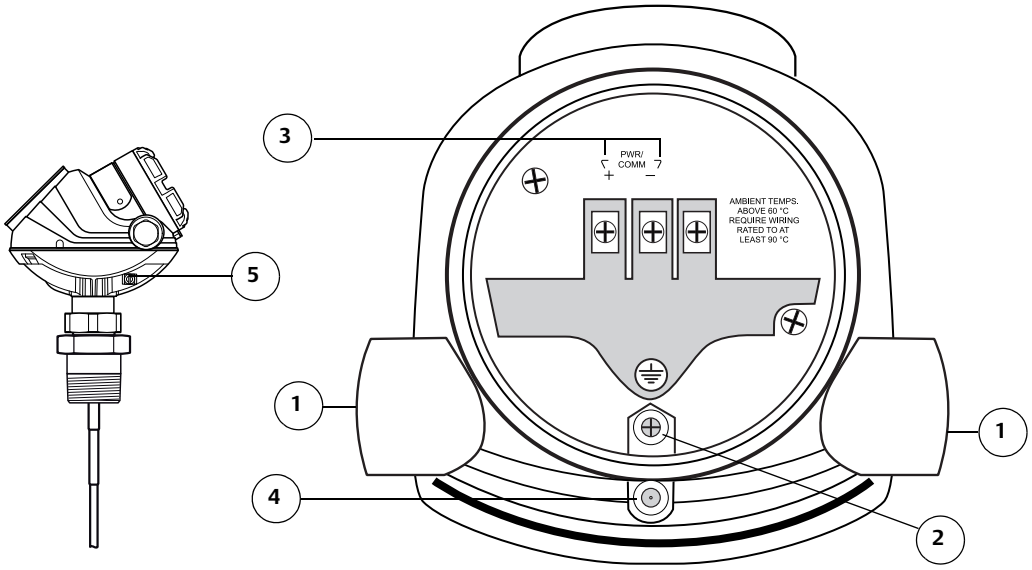

① Cable entries
② Internal ground screw
③ Terminals for signal and power supply
④ Locking screw
⑤ External ground screw

4.6.4 Non-intrinsically safe output

With non-intrinsically safe power supply in non-hazardous installations or explosion-proof/flameproof installations, wire the transmitter as shown in Figure 4-5.

NOTE:
Make sure that the power supply is off when connecting the transmitter.

Figure 4-5. Wiring diagram for non-intrinsically safe installations (HART)

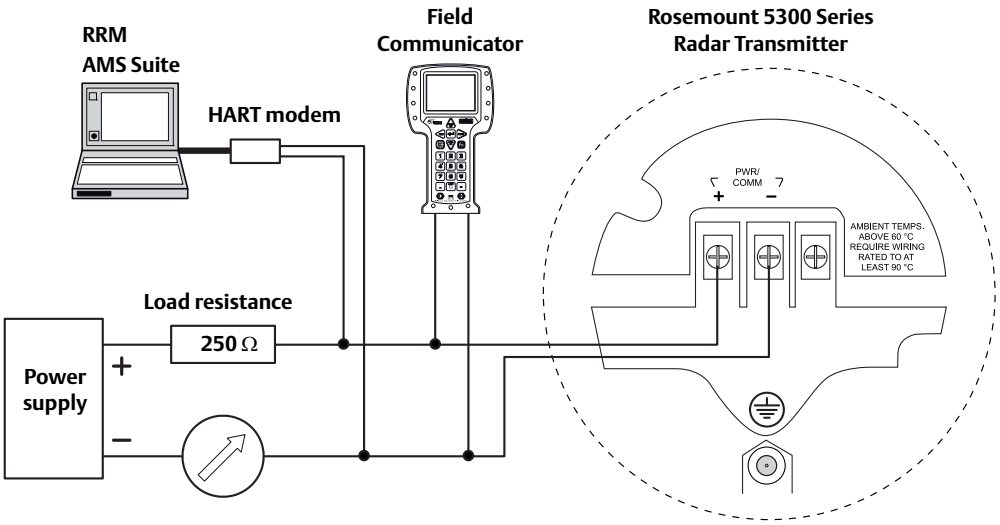

For HART communication a minimum load resistance of 250 Ω within the loop is required. For maximum load resistance. See Figure 4-1 (Explosion/Flameproof) and Figure 4-2 (Non-hazardous installations).

For explosion-proof/flameproof applications the resistance between the negative terminal on the transmitter and the power supply must not exceed 435 Ω.

NOTE:
For explosion-proof/flameproof installations, make sure the transmitter is grounded to the internal ground terminal inside the terminal compartment in accordance with national and local electrical codes.

4.6.5 Intrinsically safe output

For intrinsically safe installations wire the transmitter as shown in Figure 4-6.

NOTE:
Make sure the instruments in the loop are installed in accordance with intrinsically safe field wiring practices and system control drawings when applicable.

Figure 4-6. Wiring diagram for intrinsically safe installations (HART)

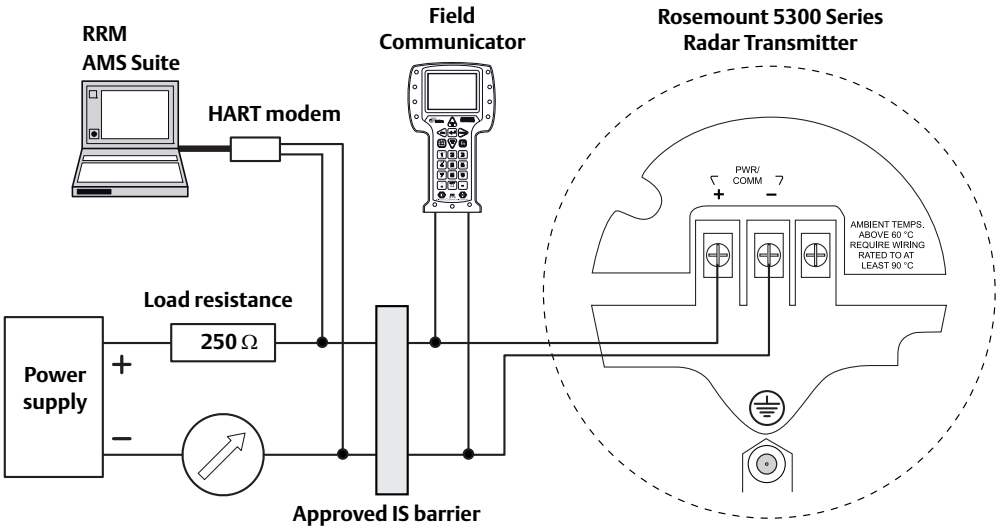

For HART communication, a minimum load resistance of 250 Ω within the loop is required. For maximum load resistance see Figure 4-3.

The power supply voltage ranges from 16 Vdc to 30 Vdc.

IS parameters(1)

U_i = 30 V

I_i = 130 mA

P_i = 1 W

C_i = 7.26 nF

L_i = 0

(1) See Appendix B: Product certifications for more information.

4.7 FOUNDATION fieldbus

4.7.1 Power requirements

Terminals in the transmitter housing provide connections for signal cables. The Rosemount 5300 transmitter is powered over FOUNDATION fieldbus with standard fielbus power supplies. The transmitter operates with the following power supplies:

Approval type	Power supply (Vdc)
IS	9 - 30
Explosion-proof/flameproof	16 - 32
None	9 - 32
FISCO; IS	9 - 17.5

4.7.2 Connecting the transmitter

To connect the transmitter:

1. Make sure the power supply is switched off.
2. ⚠ Remove the terminal block cover.
3. Pull the cable through the cable gland/conduit. Install wiring with a drip loop. The bottom of the loop must be lower than the cable/conduit entry.
4. Connect wires according to Figure 4-9 for non-intrinsically safe power supplies, and according to Figure 4-10 for intrinsically safe power supplies.
5. Use the enclosed metal plug to seal any unused port.
6. ⚠ Mount the cover and tighten the cable gland making sure the cover is secure to meet explosion-proof requirements.
7. For ATEX, IECEx and NEPSI installations, lock the cover with the locking screw ④.
8. Connect the power supply.

NOTE:
Use PTFE tape or other sealant at the NPT threads in the cable entries.

Figure 4-7. Terminal compartment and external ground screw

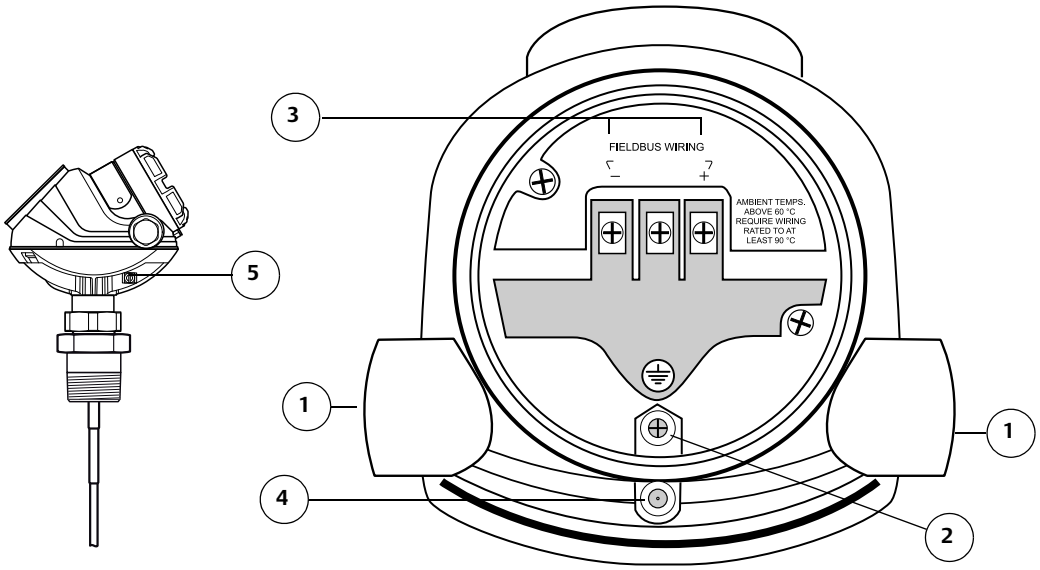

① Cable entries

② Internal ground screw

③ Terminals for signal and power supply

④ Locking screw

⑤ External ground screw

Grounding - FOUNDATION fieldbus

Signal wiring of the fieldbus segment cannot be grounded. Grounding out one of the signal wires will shut down the entire fieldbus segment.

Shield wire ground

To protect the fieldbus segment from noise, grounding techniques for shield wire usually require a single grounding point for shield wire to avoid creating a ground loop. The ground point is typically at the power supply.

Connecting fieldbus devices

Figure 4-8. Rosemount 5300 Radar Transmitter field wiring

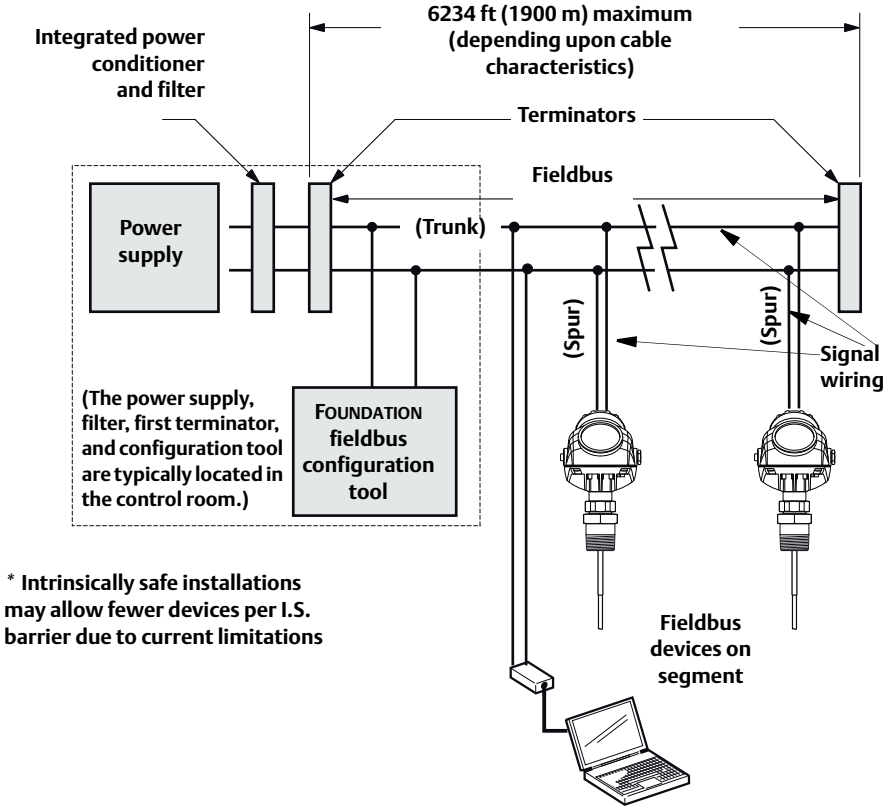

Configuration with Rosemount Radar Master (in a fieldbus system hooked up on fieldbus segment)

4.7.3 Non-intrinsically safe output

With non-intrinsically safe power supply in non-hazardous installations or explosion-proof/flameproof installations, wire the transmitter as shown in Figure 4-9.

NOTE:
Make sure that the power supply is off when connecting the transmitter.

Figure 4-9. Wiring for non-intrinsically safe power supply (FOUNDATION fieldbus)

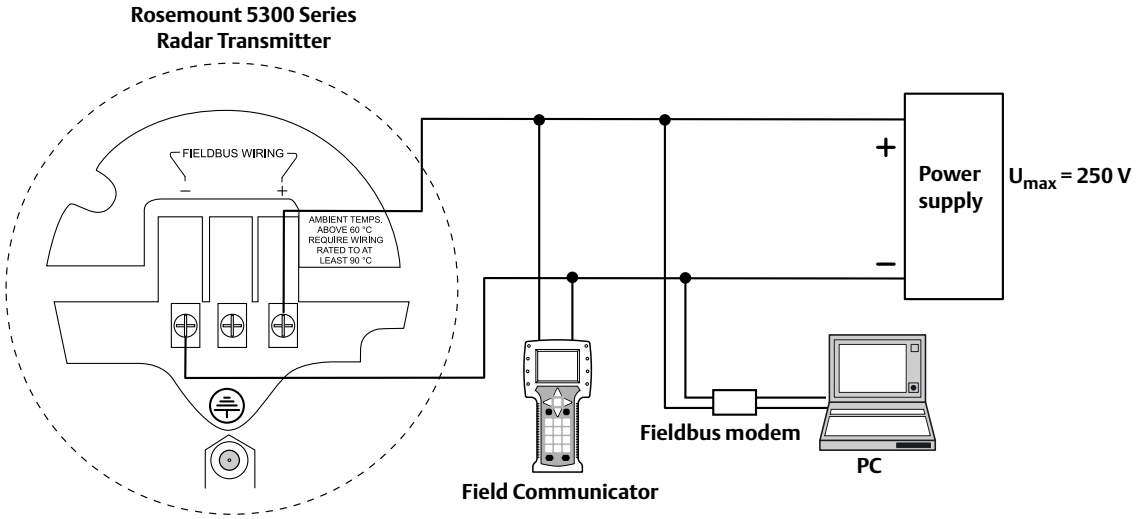

NOTE:
For explosion-proof/flameproof installations, make sure the transmitter is grounded to the internal ground terminal inside the terminal compartment in accordance with national and local electrical codes.

4.7.4 Intrinsically safe output

When your power supply is intrinsically safe, wire the transmitter as shown in Figure 4-10.

NOTE:
Make sure the instruments in the loop are installed in accordance with intrinsically safe field wiring practices.

Figure 4-10. Wiring diagram for intrinsically safe power supply (FOUNDATION fieldbus)

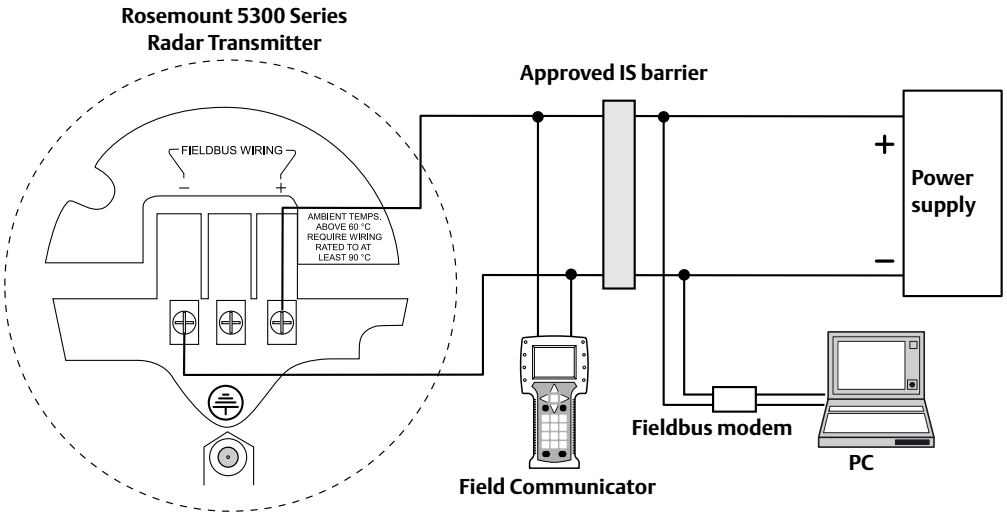

IS parameters(1)

U_i = 30 V

I_i = 300 mA

P_i = 1.5 W (ATEX), 1.3 W (FM)

C_i = 7.26 nF

L_i = 0

FISCO IS parameters

U_i = 17.5 V

I_i = 380 mA

P_i = 5.32 W

C_i = 0

L_i = 0

(1) See Appendix B: Product certifications for more information.

4.8 Optional devices

4.8.1 Tri-Loop HART to analog converter

The Rosemount 5300 transmitter outputs a HART signal with four process variables. By using the Model 333 HART Tri-Loop, up to three additional analog 4-20 mA outputs are provided.

Figure 4-11. Wiring diagram for HART Tri-Loop

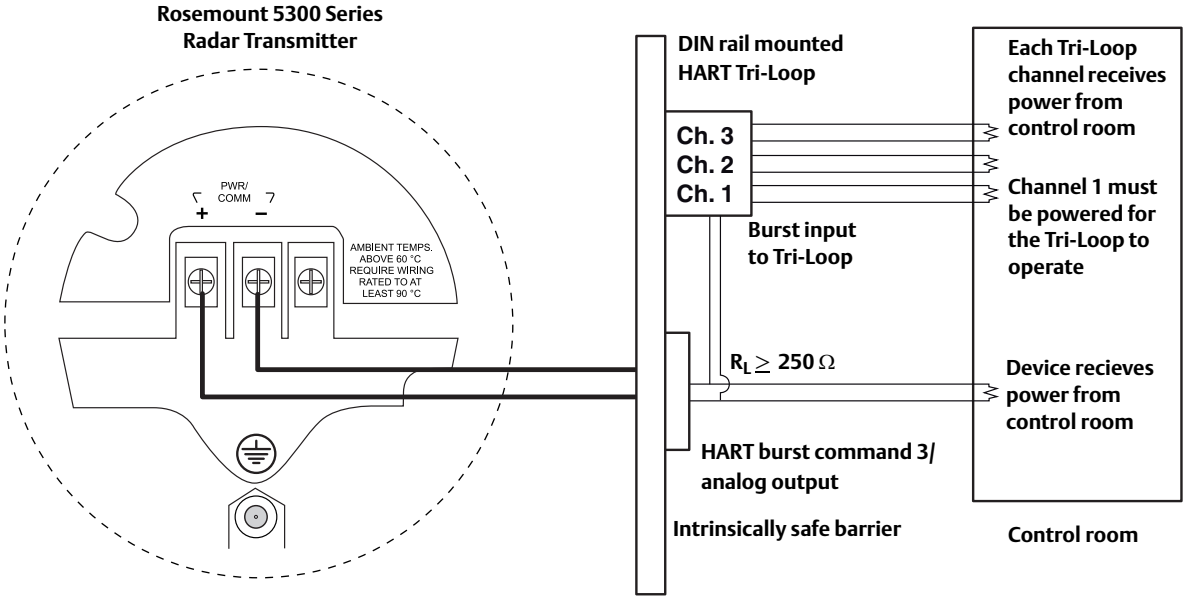

Configure channels 1, 2, and 3 to reflect the units as well as upper range values and lower range values for your secondary, tertiary and fourth variables (variable assignment is configured in the Rosemount 5300). It is also possible to enable or disable a channel from this menu. See "Tri-Loop HART-to-Analog converter" on page 122 for further information on how to install a Tri-Loop.

4.8.2 751 Field Signal Indicator

Figure 4-12. Wiring diagram for a Rosemount 5300 transmitter with 751 Field Signal Indicator

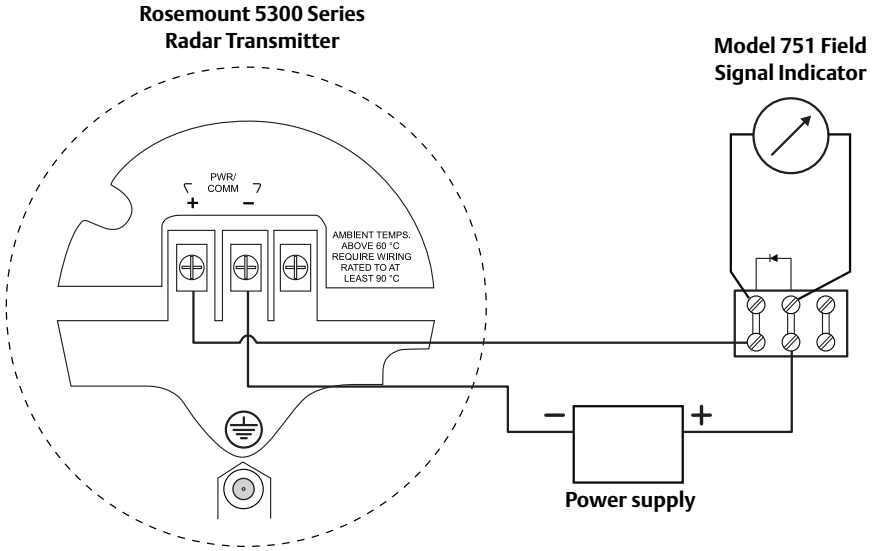

Section 5 Configuration

Safety messages ..... page 67
Overview ..... page 68
Host system integration ..... page 70
Basic configuration parameters ..... page 74
Basic configuration using a Field Communicator ..... page 81
Basic configuration using Rosemount Radar Master ..... page 84
Basic configuration using AMS Suite (HART) ..... page 105
Basic configuration using DeltaV ..... page 106
Foundation fieldbus overview ..... page 111
Configure the AI block ..... page 114
Tri-Loop HART-to-Analog converter ..... page 122
HART multi-drop configuration ..... page 124

5.1 Safety messages

Procedures and instructions in this section may require special precautions to ensure the safety of the personnel performing the operations. Information that raises potential safety issues is indicated by a warning symbol (⚠). Refer to the safety messages listed at the beginning of each section before performing an operation preceded by this symbol.

⚠ WARNING

Explosions could result in death or serious injury.

Verify that the operating environment of the gauge is consistent with the appropriate hazardous locations certifications.

Before connecting a HART®-based communicator in an explosive atmosphere, make sure the instruments in the loop are installed in accordance with intrinsically safe or non-incendive field wiring practices.

Do not remove the gauge cover in explosive atmospheres when the circuit is alive.

⚠ WARNING

Failure to follow safe installation and servicing guidelines could result in death or serious injury.

Make sure only qualified personnel perform the installation.

Use the equipment only as specified in this manual. Failure to do so may impair the protection provided by the equipment.

Do not perform any service other than those contained in this manual unless you are qualified.

5.2 Overview

The configuration of a Rosemount 5300 Series radar transmitter is normally a simple and straightforward task. The complete configuration of a Rosemount 5300 Series transmitter includes basic configuration, echo tuning, and advanced configuration. This section describes basic configuration.

If the transmitter is pre-configured at the factory according to the ordering specifications in the Configuration Data Sheet, no further basic configuration is required unless tank conditions have changed. The Rosemount 5300 Series supports a set of advanced configuration options as well, which can be used to handle special tank conditions and applications.

It is highly recommended that prior to changing any parameters, save your current configuration as a backup file. If for any reason configuration data is lost or accidentally modified making the device inoperable, this backup file can be reloaded into the device.

5.2.1 Basic configuration

The basic configuration includes parameters for a standard configuration which is sufficient in most cases. The basic configuration comprises the following items:

- Measurement units
- Tank configuration
  - Tank geometry
  - Environment
  - Volume
- Analog output

5.2.2 Echo tuning

Amplitude thresholds can be adjusted in order to handle special situations when, for example, objects in the tank cause disturbing echoes that are stronger than the surface echo. A useful function is the so called *Amplitude Threshold Curve* (ATC) which lets you filter out single disturbing echoes. See Section 7: Service and troubleshooting, and Appendix C: Advanced configuration for more information.

5.2.3 LCD configuration

It is possible to specify the variables to be presented on the display panel. See also Section 6: Operation.

5.2.4 Advanced configuration

For some applications, further device specific configuration is needed in addition to the basic configuration. This may be due to product properties or tank shape. See Appendix C: Advanced configuration for more information.

5.2.5 Configuration tools

There are several tools available for the configuration of a Rosemount 5300 transmitter:

- Rosemount Radar Master (RRM). Note that RRM is recommended for advanced configuration features.
  See "Basic configuration using Rosemount Radar Master" on page 84 for information on how to use RRM for configuration of the 5300 Series
- Field Communicator.
  See "Basic configuration using a Field Communicator" on page 81 for the Field Communicator Menu Tree
- AMS Suite software (for HART). See "Basic configuration using AMS Suite (HART)" on page 105
- DeltaV (only for Foundation fieldbus). See "Basic configuration using DeltaV" on page 106
- Other tools that support Electronic Device Description Language (EDDL) functionality

RRM is a user-friendly, Windows® -based software package including waveform plots, off-line/on-line configuration Wizard, logging, and extensive on-line help.

To communicate with the transmitter using RRM, a HART modem (part number 03300-7004-0001 or 03300-7004-0002) or a FOUNDATION fieldbus modem (part number 03095-5108-0001 for PCMCIA) is required. For FOUNDATION fieldbus communication you will also need the *National Instruments Communication Manager* software (see "Installing the RRM software for FOUNDATION fieldbus" on page 87).

5.3 Host system integration

5.3.1 Confirm system readiness

Confirm HART revision capability

If using HART-based control or asset management systems, confirm the HART 7 capability of such systems prior to commissioning and installation. Not all systems are capable of communicating with HART revision 7 devices.

Transmitters with a firmware version 2F0 or later can be configured for either HART revision 5 or 7 (default output from factory if selecting option code HR7).

Confirm correct Device Driver

Verify that the latest Device Driver (DD/DTM) is loaded on your systems to ensure proper communication. Download the latest Device Driver from www.rosemount.com/LevelSoftware.

Table 5-1. Rosemount 5300 device revisions and files

Firmware version[1]	Find Device Driver	
	HART Universal Revision	Device Revision[2]
2F0 or later	7	4
	5	3
2A2 - 2E0	5	3

*(1) Firmware version is printed on the transmitter head label, e.g. SW 2E0 or can be found in Rosemount Radar Master (select **Device** > **Properties**).*
(2) Device revision is printed on the transmitter head label, e.g. HART Dev Rev 4.

Switch HART revision mode

If the HART configuration tool is not capable of communicating with HART Revision 7, the Rosemount 5300 Series will load a Generic Menu with limited capability. The following procedures will switch the HART revision mode from the Generic Menu:

Manual Setup > Device Information > Identification > Message

- To change to HART Revision 5, Enter: “HART5” in the Message field
- To change to HART Revision 7, Enter: “HART7” in the Message field

5.3.2 Set alarm limits

The alarm limits that are set in the host system need to be adjusted for the expected maximum product level rate and configured Damping Value.

When setting the high alarm limit, a safety margin (see Figure 5-1) should be subtracted from the desired high alarm limit. For the low alarm limit, the same safety margin should be added to the desired low alarm limit.

The safety margin ensures that the response time of the device is taken into account when specifying the alarm limits. See table Table 5-2 or Table 5-3 (if Signal Quality Metrics is turned on) to determine the safety margin for your application.

NOTE:
Alert limit values must be outside the Blind Zones and preferable outside areas with reduced accuracy.

Figure 5-1. Safety margin for alarm limits

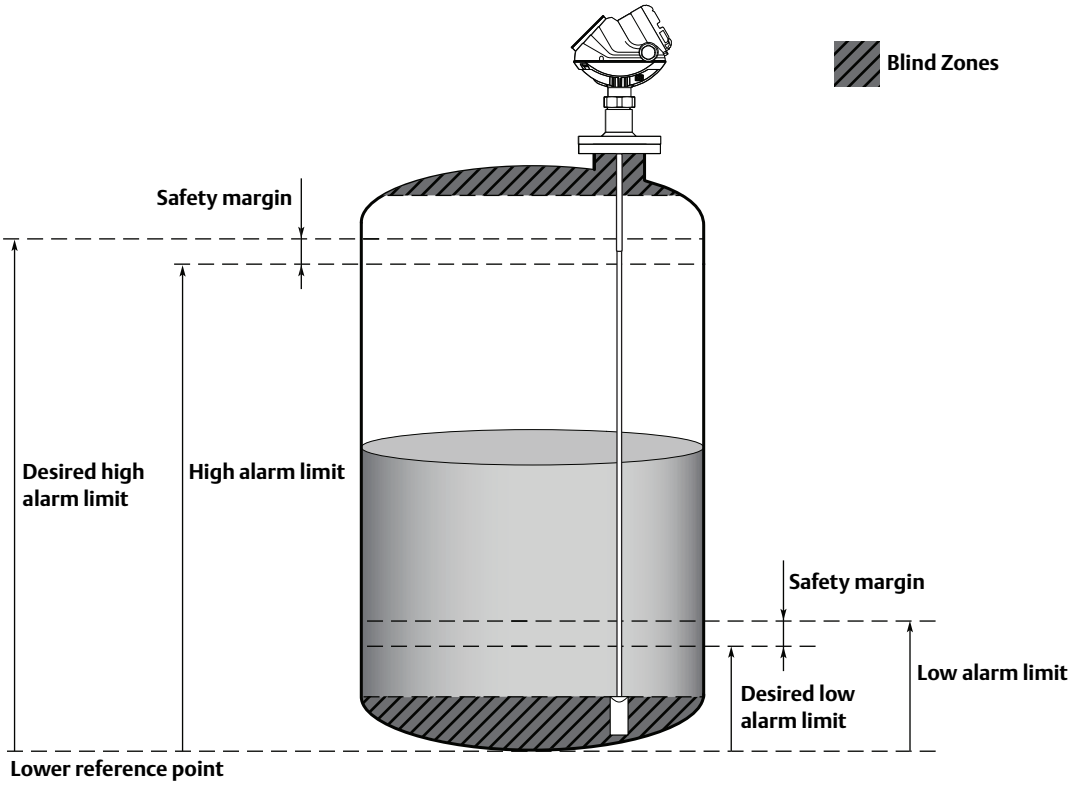

To set the alarm limits, do the following:

1. Identify maximum product level rate for the application.
2. Note configured Damping Value.
   - In RRM, select **Setup** > **Advanced**, and click the **Echo Tracking** tab.
3. Calculate where to position the high alarm limit in your host system.
   a. Determine desired high alarm limit.
   b. Subtract safety margin from the desired high alarm limit according to Table 5-2 or Table 5-3 (if Signal Quality Metrics is turned on).
4. Calculate where to position the low alarm limit in your host system.
   a. Determine desired low alarm limit.
   b. Add safety margin to the desired low alarm limit according to Table 5-2 or Table 5-3 (if Signal Quality Metrics is turned on).

Table 5-2. Safety margin in inches and millimeters

Level Rate in/min (mm/min)	Damping Value			
	2 s (default)	10 s	20 s	50 s
Level Rate > 6.40 (160)	0.25 × Level Rate	0.60 × Level Rate	0.90 × Level Rate	1.90 × Level Rate
2.35 (60) < Level Rate < 6.40 (160)	0.50 × Level Rate	0.85 × Level Rate	1.15 × Level Rate	2.15 × Level Rate
1.05 (25) < Level Rate < 2.35 (60)	0.90 × Level Rate	1.25 × Level Rate	1.60 × Level Rate	2.60 × Level Rate
Level Rate < 1.05 (25)	1.75 × Level Rate	2.10 × Level Rate	2.40 × Level Rate	3.40 × Level Rate

Table 5-3. Safety margin in inches and millimeters with Signal Quality Metrics turned on

Level Rate in/min (mm/min)	Damping Value			
	2 s (default)	10 s	20 s	50 s
Level Rate > 6.40 (160)	0.40 × Level Rate	0.65 × Level Rate	1.00 × Level Rate	2.00 × Level Rate
2.35 (60) < Level Rate < 6.40 (160)	0.85 × Level Rate	1.10 × Level Rate	1.45 × Level Rate	2.45 × Level Rate
1.05 (25) < Level Rate < 2.35 (60)	1.55 × Level Rate	1.85 × Level Rate	2.15 × Level Rate	3.15 × Level Rate
Level Rate < 1.05 (25)	3.05 × Level Rate	3.30 × Level Rate	3.65 × Level Rate	4.65 × Level Rate

Example

Maximum product level rate = 100 mm/min
Damping Value = 10 s

The Signal Quality Metrics is turned off in this example, so the safety margin is calculated by using Table 5-2.
Safety margin = 0.85 × Level Rate = 0.85 × 100 = 85 mm

Desired high level alarm limit = 8500 mm
High alarm limit = Desired high alarm limit - Safety margin = 8500 - 85 = 8415 mm

Figure 5-2. Example - Determine high alarm limit

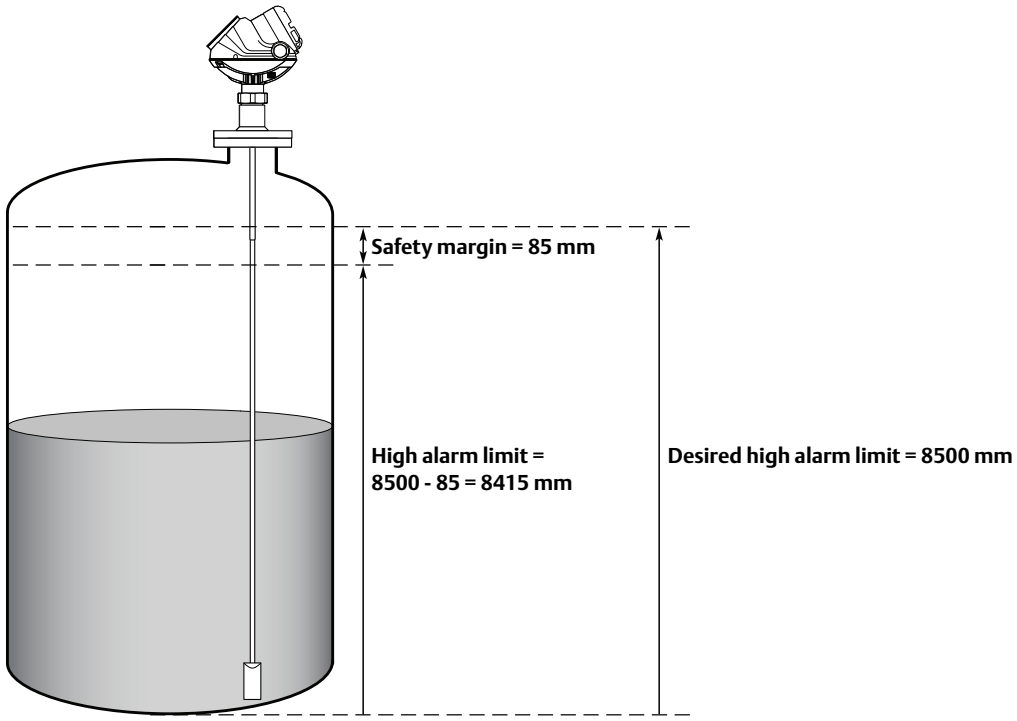

Desired low level alarm limit = 300 mm
Low alarm limit = Desired low alarm limit + Safety margin = 300 + 85 = 385 mm

Figure 5-3. Example - Determine low alarm limit

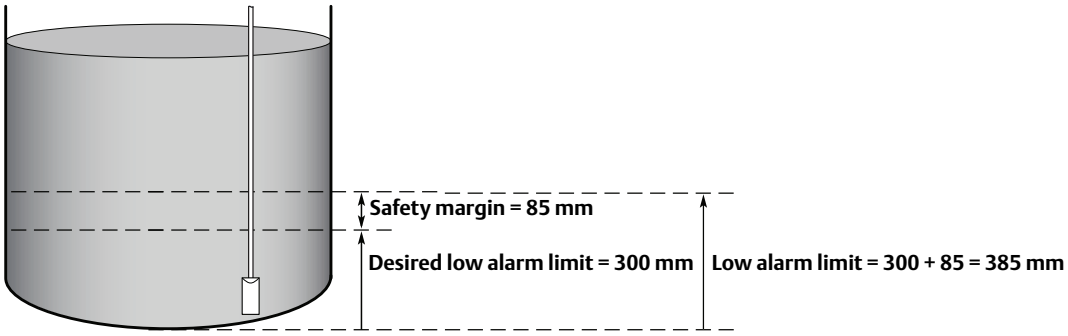

5.4 Basic configuration parameters

This section describes basic configuration parameters for a Rosemount 5300 transmitter. Basic configuration is only needed for the 5300 Series transmitters which are not pre-configured at the factory. Factory configuration is normally specified in the Configuration Data Sheet.

5.4.1 Measurement units

Measurement units can be specified for presentation of level/interface level, level rate, volume, and temperature values.

5.4.2 Tank and probe geometry

The basic transmitter configuration includes setting the tank geometry parameters.

Figure 5-4. Tank geometry

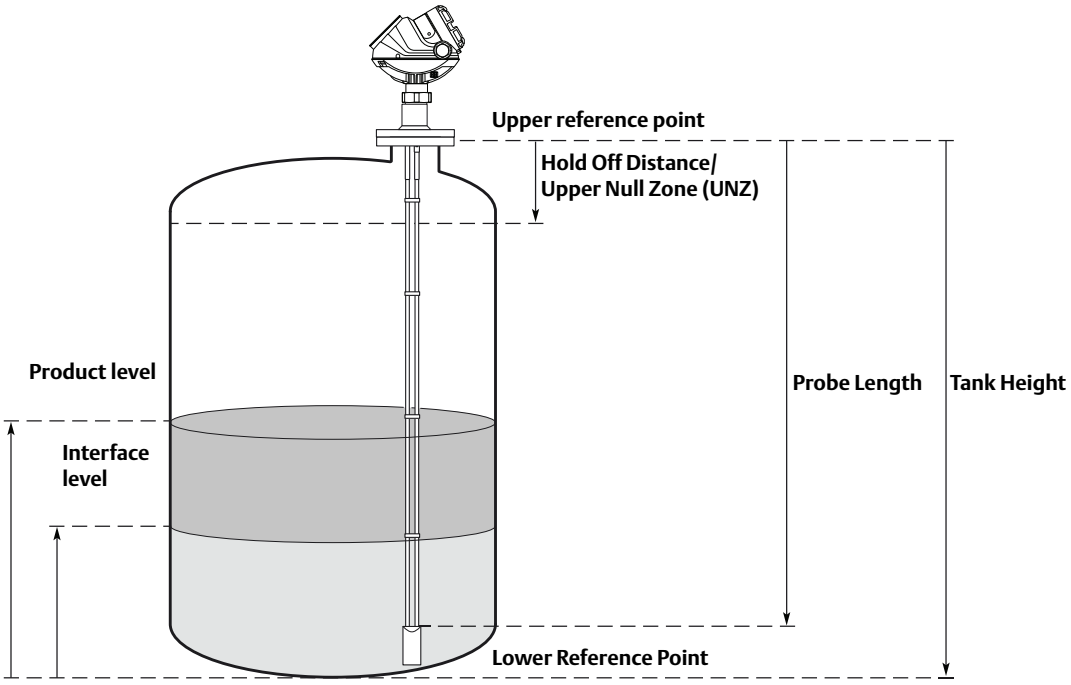

For the different tank connections the Upper Reference Point is located at the underside of the threaded adapter or at the underside of the welded flange, as illustrated in Figure 5-5:

Figure 5-5. Upper reference point

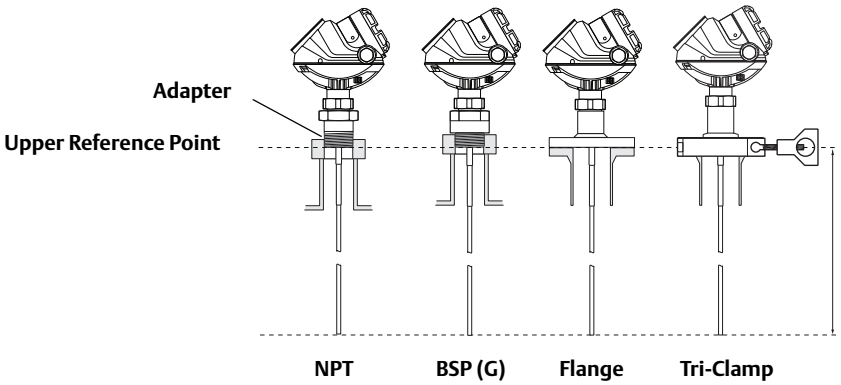

Tank Height

The Tank Height is defined as the distance from the upper reference point to the lower reference point. The transmitter measures the distance to the product surface and subtracts this value from the Tank Height to determine the product level. The lower reference point can be set to any position in the tank simply by adjusting the Tank Height.

Mounting type

Enter the type of mounting for the device. This configuration optimizes the device for the respective mounting type.

- Unknown – default factory setting for mounting type, and can also be used if the mounting type is unknown
- Pipe/chamber – select this option if the device is mounted on a chamber/bridle or in a pipe. When selecting this alternative enter the corresponding Inner diameter as well
- Nozzle – select this if the device is installed on a nozzle. When selecting this alternative, configure the Inner diameter and the nozzle height as well
- Direct/bracket – when the device is mounted directly on the tank roof with no traditional nozzle, this is the alternative to use. With this selection no inner diameter or height is required, thus those selections are disabled

Inner Diameter

Using with pipe, chamber, and nozzle installations.

Nozzle Height

For nozzle installations.

Probe Length

The Probe Length is the distance between the upper reference point and the end of the probe. If a weight is used at the end of the probe, it should not be included.

For flexible single lead probes anchored with clamps, the Probe Length should be configured as the distance between the underside of the flange and the upper clamp (see “Anchoring” on page 44).

This parameter is pre-configured at the factory. It must be changed if the probe is shortened.

Probe Type

The transmitter is designed to optimize measurement performance for each probe type.

This parameter is pre-configured at the factory. This value needs to be changed if the probe type is changed.

Hold Off Distance/Upper Null Zone

The Hold Off Distance/UNZ is equal to zero in the default configuration.This parameter should only be changed if there are measurement problems in the upper part of the tank. Such problems may occur if there are disturbing objects, such as a narrow nozzle with rough walls, close to the probe. By adjusting the Hold Off Distance/Upper Null Zone, the measuring range is reduced. See “Handling of disturbances from nozzle” on page 280 for further information.

5.4.3 Tank environment

Measurement mode

Normally, the measurement mode does not need to be changed. The transmitter is pre-configured according to the specified model:

Table 5-4. List of measurement modes which can be used for different 5300 models

Model	Measurement mode
5301	■ Liquid product level(1) ■ Interface level with submerged probe
5302	■ Liquid product level ■ Product level and interface level(1) ■ Interface level with submerged probe ■ Solid product level
5303	■ Solid product level(1)

(1) Default setting

Submerged is used for applications where the probe is fully submerged in liquid. In this mode, the transmitter ignores the upper product level. See “Interface measurements with fully submerged probes” on page 150” for more information.

NOTE:
Only use *Submerged* for applications where the interface is measured with a fully submerged probe.

Rapid Level Changes

Optimize the transmitter for measurement conditions where the level changes quickly due to filling and emptying of the tank. As a default standard, a Rosemount 5300 transmitter is able to track level changes of up to 1.5 in./s (40 mm/s). When the *Rapid Level Changes* check-box is marked, the transmitter can track level changes of up to 8 in./s (200 mm/s).

The *Rapid Level Changes* check-box should not be used in normal conditions when the product surface moves slowly.

Product Dielectric Range

NOTE:
Applicable to “Liquid Product Level” and “Solid Product Level” measurement modes.

Enter the range of the dielectric constant (DC) for the product in the tank. The selected range of dielectric constant is used for setting the automatically calculated amplitude thresholds.

Upper Product Dielectric Constant

NOTE:
Applicable to “Interface Level with submerged” and “Product Level and Interface Level” measurement modes.

Enter the Upper Product Dielectric Constant (DC) as accurate as possible. The Upper Product Dielectric Constant (DC) is essential for calculating the interface level and the upper product thickness. In addition, it is used for setting the automatically calculated amplitude thresholds.

In case it is unknown, use the Dielectric Constant Chart or Upper Product Dielectric Constant Calculator embedded in the configuration tools as help when configuring the DC. See “Product dielectric range/Upper product dielectric constant” on page 95 for more information.

If the dielectric constant of the lower product is significantly smaller than the dielectric constant of water, you may need to make special adjustments, see Appendix C: Advanced configuration for further information.

See “Interface” on page 17 for criteria on the dielectric constants that need to be fulfilled for interface measurement.

5.4.4 Volume configuration

For volume calculations, you can choose one of the standard tank shapes or the strapping option. Choose *None* if volume calculation is not used. For the standard tanks, a volume offset parameter can be specified which can be used for a non-zero volume that corresponds to the zero level. This may be useful, for example, if the user wants to include the product volume below the zero level.

Tank type

You can choose one of the following options:

- Strap table
- Vertical cylinder
- Horizontal cylinder
- Vertical bullet
- Horizontal bullet
- Sphere
- None

Strapping table

Use a strapping table if a standard tank type does not provide sufficient accuracy. Use most of the strapping points in regions where the tank shape is non-linear. A maximum of 20 points can be added to the strapping table.

Figure 5-6. Strapping points



Actual tank bottom may look like this.

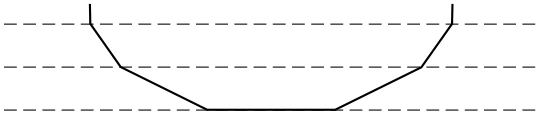

Using only 3 strapping points results in a level-to-volume profile that is more angular than the actual shape.

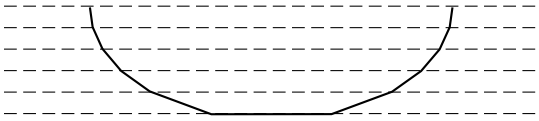

Using 10-15 of the points at the bottom of the tank yields a level-to-volume profile that is similar to the actual tank bottom.

Standard tank shapes

Figure 5-7. Standard tank shapes

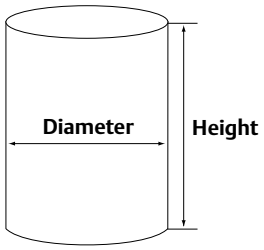

Vertical cylinder

Vertical cylinder tanks are specified by diameter, height, and volume offset.

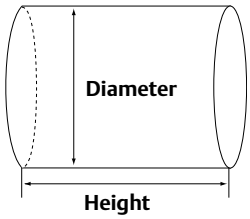

Horizontal cylinder

Horizontal cylinders are specified by diameter, height, and volume offset.

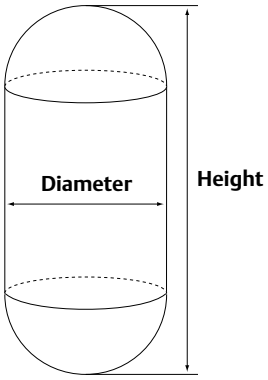

Vertical bullet

Vertical bullet tanks are specified by diameter, height, and volume offset. The volume calculation model for this tank type assumes that the radius of the bullet end is equal to the diameter/2.

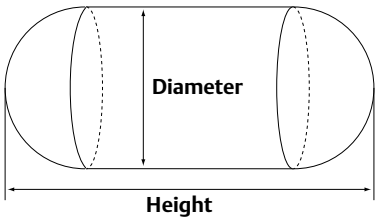

Horizontal bullet

Horizontal bullets are specified by diameter, height, and volume offset. The volume calculation model for this tank type assumes that the radius of the bullet end is equal to the diameter/2.

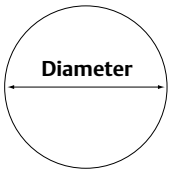

Sphere

Spherical tanks are specified by diameter and volume offset.

5.4.5 Analog output (HART)

The output source (Primary Value), range values, and alarm mode are specified for the analog output.

Figure 5-8. Example of range value settings

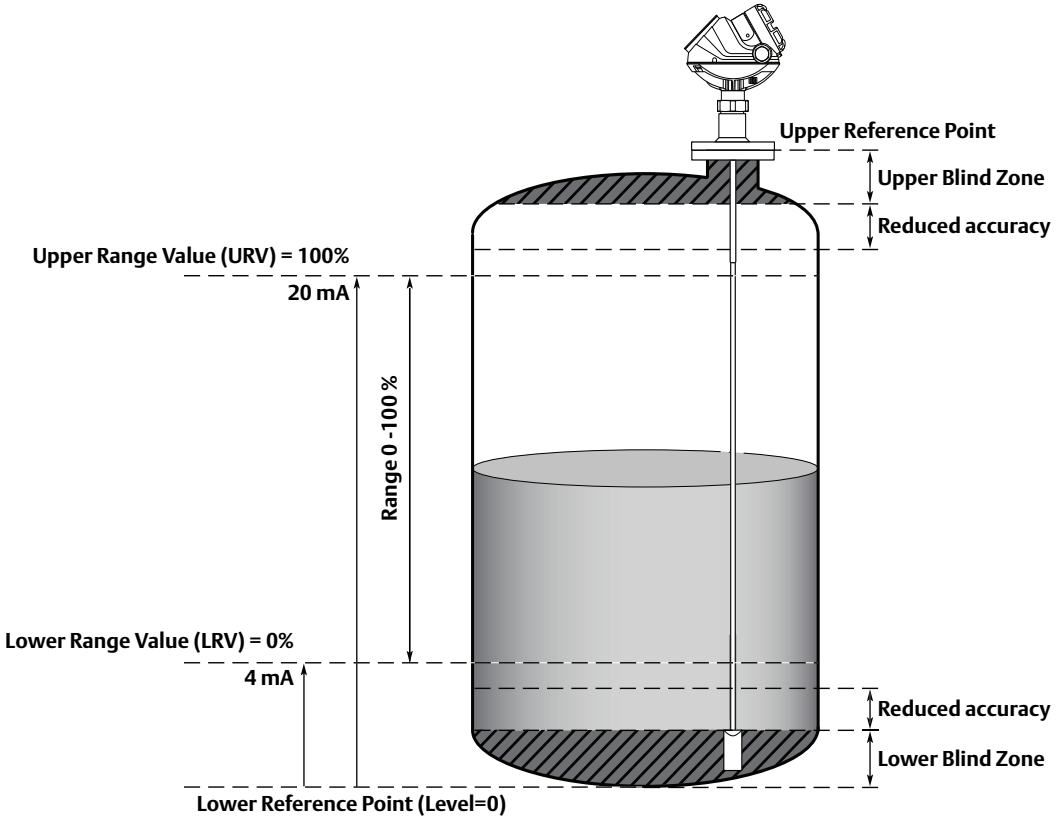

Output source/Primary Variable

Specify the source to control the analog output. Typically, the Primary Value is configured to be the product level.

Upper/Lower Range Value

Enter the range values that correspond to the analog output values 4 and 20 mA. If a measured value goes beyond the measurement range, the transmitter enters saturation mode (limit alarm is disabled) or alarm mode depending on the current configuration.

NOTE:
Measurements may not be possible in the Blind Zones, and measurements close to the Blind Zones will have reduced accuracy. Therefore, the 4-20 mA points should be configured outside these zones.

Also make sure that the 20 mA value is below the Hold Off Distance/Upper Null Zone (UNZ). (This parameter may be used if there are measurement problems in the upper part of the tank,

see "Handling of disturbances from nozzle" on page 280). The Hold Off Distance/UNZ is equal to zero in the default configuration.

Alarm mode

The alarm mode specifies the analog output state when there is a failure or a measurement error:

High: the output current is set to the high alarm limit.

Low: the output current is set to the low alarm limit.

Freeze current: the output current is set to the last valid value at the time when the error occurs.

Default settings for alarm mode:

- Measurement errors: output current = high
- Measured value out of range: transmitter enters saturation mode (if limit alarm is disabled).

Table 5-5. Analog output: standard alarm values vs. saturation values

Level	4–20 mA saturation values	4–20 mA alarm value
Low	3.9 mA	3.75 mA
High	20.8 mA	21.75 mA

Table 5-6. Analog output: NAMUR-compliant alarm values vs. saturation values

Level	4–20 mA saturation values	4–20 mA alarm value
Low	3.8 mA	3.6 mA
High	20.5 mA	22.5 mA

5.5 Basic configuration using a Field Communicator

This section describes how to configure the Rosemount 5300 Series transmitter by using a Field Communicator.

The menu tree with the various configuration parameters is shown in Figure 5-8. Section "Basic configuration parameters" on page 74 presents a description of the basic configuration parameters.

For information on all the capabilities, refer to the 375 Field Communicator User's Manual or the 475 Field Communicator User's Manual, available at www.fieldcommunicator.com.

Figure 5-9. 375 Field Communicator



Figure 5-10. 475 Field Communicator



1. Check that the desired measurement units are selected.
2. Open the Process Variable menu and select Primary Variable. HART command: [1,1]. Select the desired parameter.
3. Open the Basic Setup menu. HART command: [2, 1]. This menu includes probe, tank geometry, environment, volume, and analog output settings.
4. Select Finish, Device Specific Setup to see if there is any additional configuration that needs to be done.
5. Restart the transmitter. HART command: [3, 2, 1, 1].

See also "Guided Setup" on page 90 for further information on configuration of the Rosemount 5300 transmitter.

Figure 5-11. Field Communicator menu tree corresponding to Device Revision 3

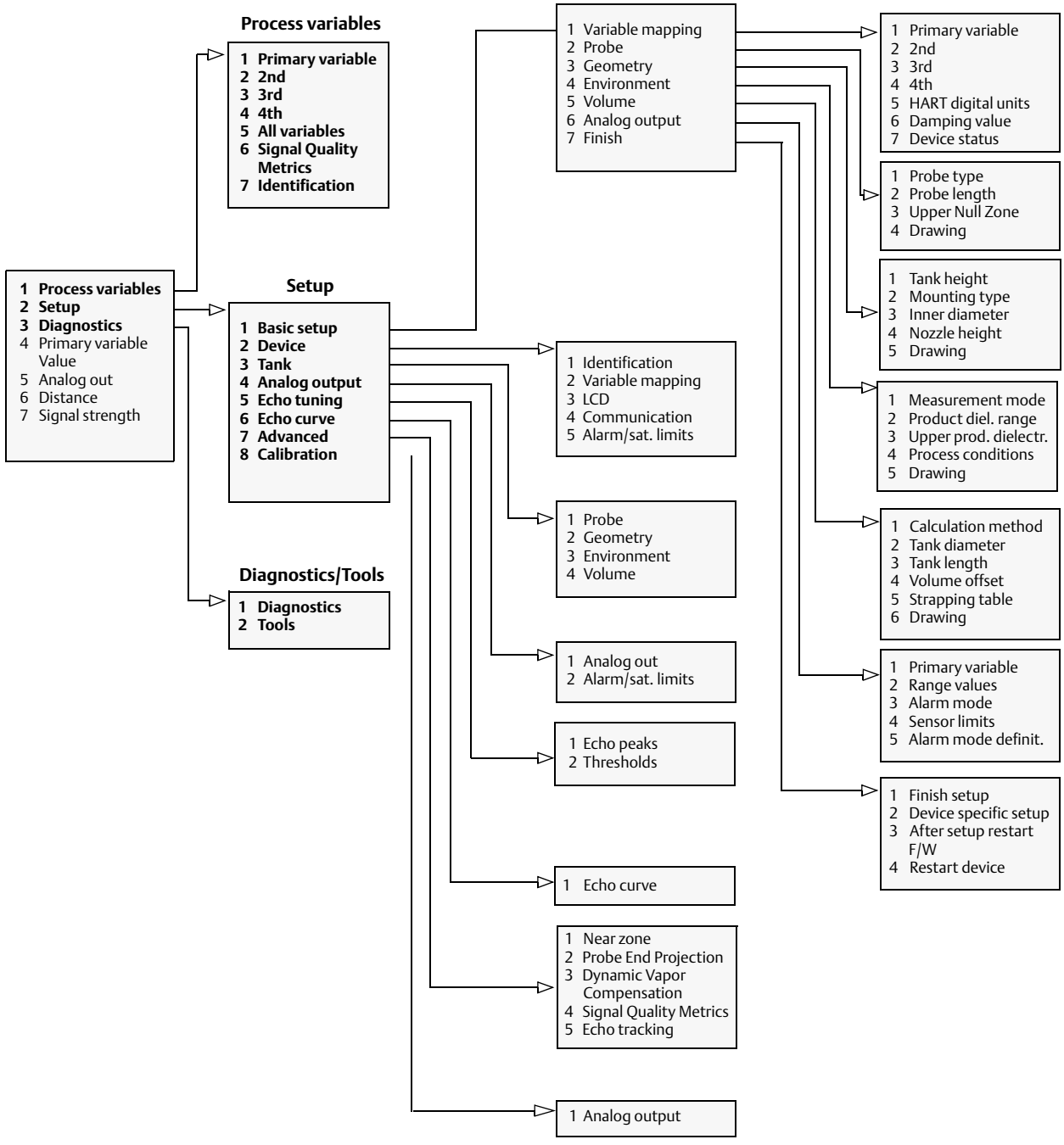

5.6 Basic configuration using Rosemount Radar Master

The Rosemount Radar Master (RRM) is a user-friendly software tool that allows the user to configure the Rosemount 5300 Series transmitter. Choose either of the following methods to configure a Rosemount 5300 Series transmitter with RRM:

- Guided Setup if you are unfamiliar with the 5300 transmitter (see page 90).
- Setup functions if you are already familiar with the configuration process or for changes to the current settings (page 89).

5.6.1 System requirements

Hardware

Processor (minimum/recommended): Pentium 200 MHz /1 GHz

Memory (minimum/recommended): 64 /128 MB RAM

COM Port: 1 serial COM port or 1 USB port

Graphical card (minimum/recommended): Screen resolution of 800 x 600 / 1024 x 768

Hard drive space: 100 MB

Software

Operating systems supported:

Windows 2000 - Service pack 3

Windows XP - Service pack 2 and Service pack 3

Windows 7 - 32-bit and 64-bit versions

5.6.2 Help in RRM

Help is accessed by selecting the *Contents* option from the Help menu. Help is also available from a Help button in most windows.

5.6.3 Installing the RRM software for HART communication

To install the Rosemount Radar Master:

1. Insert the installation CD into your CD-ROM drive.
2. If the installation program is not automatically started, choose Run from the Windows Start bar.

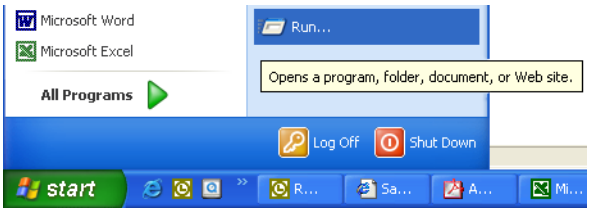

3. Type D:\RRM**Setup.exe**, where D is the CD-ROM drive.
4. Follow the instructions on the screen.
5. Make sure that HART is chosen as default protocol.
6. For Windows 2000/XP/7 set COM port buffers to 1, see page 86.

Getting started

1. From the Start menu click **Programs** > **Rosemount** > **Rosemount Radar Master** or click the RRM icon in the Windows workspace.
2. If the *Search Device* window did not appear automatically, choose menu option **Device** > **Search**.
3. In the *Search Device* window, choose communication protocol HART, and click the **Start Scan** button (click the **Advanced** button if you want to specify start and stop address). Now RRM searches for the transmitter.
4. After a while the *Search Device* window presents a list of found transmitters.
5. Select the desired transmitter and press **OK** to connect. If communication does not work, check that the correct COM port is connected to the computer and that the COM port is properly configured, see "Specifying the COM port" on page 86. You may also check in the *Communication Preferences* window that HART communication is enabled.
6. In the RRM Status Bar verify that RRM communicates with the transmitter:

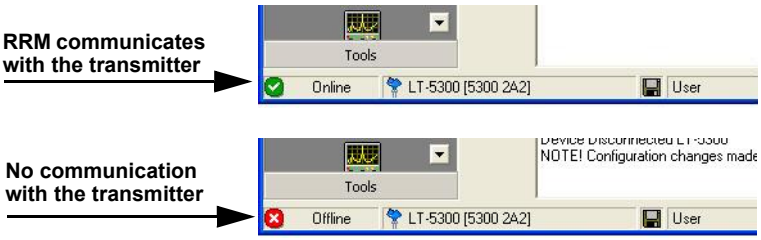

5.6.4 Specifying the COM port

If communication is not established, open the *Communication Preferences* window and check that the correct COM Port is selected:

1. In RRM, select **View** > **Communication Preferences**.

Figure 5-12. Communication Preferences

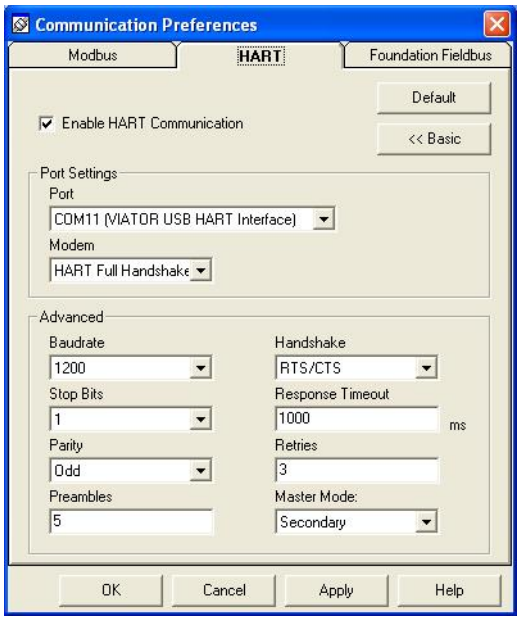

2. Select the **HART** tab.
3. Make sure that HART communication is enabled.
4. Check which COM port the modem is connected to.
5. Choose the COM port option that matches the actual COM port on the PC that the transmitter is connected to.

5.6.5 To set the COM port buffers

For Windows 2000/XP/7 the COM port **Receive Buffer** and **Transmit Buffer** need to be set to 1. To set the COM port buffers:

1. In the MS Windows Control Panel open the **System** option.
2. Choose the **Hardware** tab and click the **Device Manager** button.
3. Expand the **Ports** node in the tree view.
4. Click the right mouse button on the selected COM port and choose **Properties**.
5. Select the **Port Settings** tab and click the **Advanced** button.

6. Drag the *Receive Buffer* and *Transmit Buffer* slides to 1.
7. Click the **OK** button.
8. Restart the computer.

5.6.6 Installing the RRM software for FOUNDATION fieldbus

To install the Rosemount Radar Master for FOUNDATION fieldbus communication:

1. Start by installing the *National Instruments Communication Manager* software. See National Instruments manual (*Getting started with your PCMCIA-FBUS and the NI-FBUS™ software*) for more information.
2. Insert the RRM installation CD into your CD-ROM drive.
3. If the installation program is not automatically started, choose Run from the Windows Start bar.

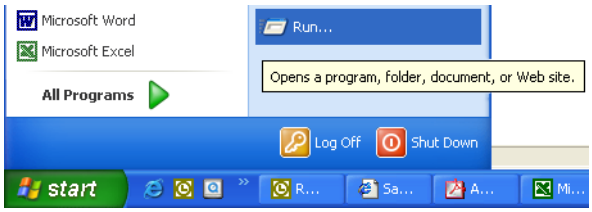

4. Type D:\RRM**Setup.exe** where D is the CD-ROM drive.
5. Follow the instructions on the screen.
6. Make sure that FOUNDATION fieldbus is chosen as default protocol.

Getting started

1. Before starting RRM make sure that appropriate settings are made with the *National Instruments Interface Configuration Utility*:

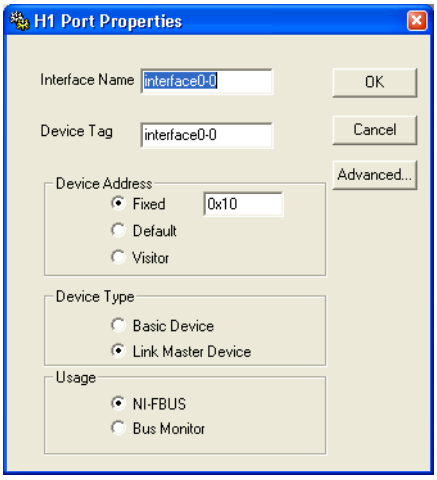

If only Rosemount Radar Master is connected to the bus:
Device address = Fixed
Device Type = Link Master Device
Usage = NI-FBUS

If other host systems are connected to the bus:
Device address = Visitor
Device Type = Basic Device
Usage = NI-FBUS

2. Start Rosemount Radar Master (RRM): from the Start menu click **Programs** > **Rosemount** > **Rosemount Radar Master** or click the RRM icon in the MS Windows workspace.

3. If the *National Instruments Communication Manager* server is not running, click **Yes** when RRM displays a request for starting the server.

4. If the *Search Device* window did not appear automatically choose menu option **Device** > **Search**.

5. In the *Search Device* window choose communication protocol FOUNDATION fieldbus (if not already selected) and click the **Start Scan** button (click the **Advanced** button if you want to specify start and stop dress).
Now RRM searches for the transmitter. After a while RRM shows the transmitters found on the bus:

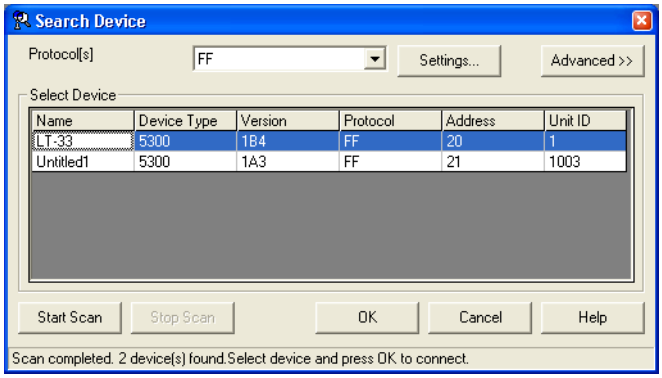

6. Select the desired transmitter and click **OK** to connect.
In the RRM status bar verify that RRM communicates with the transmitter:

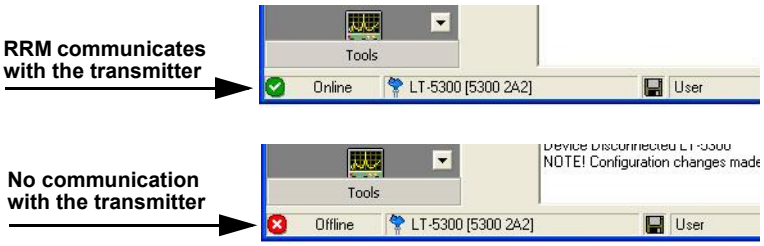

5.6.7 Specifying measurement units

Measurement units for data presentation in RRM can be specified when the RRM program is installed. Units can also be changed as follows:

1. Select **View** > **Application Preferences**.
2. Select the **Measurement Units** tab.
3. Choose the desired units for length, level rate, volume, and temperature.

5.6.8 Using the setup functions

Use the setup function if you are already familiar with the configuration process for the Rosemount 5300 Series transmitter or for changes to the current settings:

Figure 5-13. Setup functions in RRM.

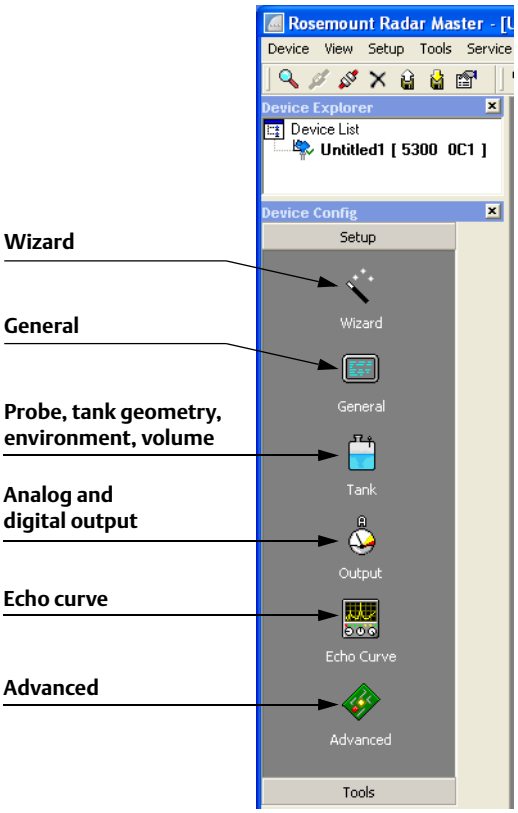

1. Start the RRM software.
2. In the RRM workspace choose the appropriate icon for the configuration of transmitter parameters:
   - **Wizard:** the Wizard is a tool that guides you through the basic configuration procedure of a Rosemount 5300 Series transmitter
   - **General:** configuration of general settings such as communication parameters, device tag, and measurement units. This window also lets you configure which LCD variables to be displayed, see Section 6: Operation
   - **Tank:** configuration of probe, tank geometry, tank environment, and volume
   - **Output:** configuration of analog and digital output
   - **Echo Curve:** disturbance echo handling
   - **Advanced:** advanced configuration

5.6.9 Guided Setup

The following description shows how to use the RRM Guided Setup. The corresponding HART commands (Field Communicator Fast Key Sequence) and FOUNDATION fieldbus parameters are also shown.

The Guided Setup is useful if you are unfamiliar with the Rosemount 5300 Series transmitter.

1. Start the Guided Setup.

   Start RRM. It automatically presents a list of available transmitters. Select the desired transmitter. Now the transmitter is connected and the *Guided Setup* window appears automatically:

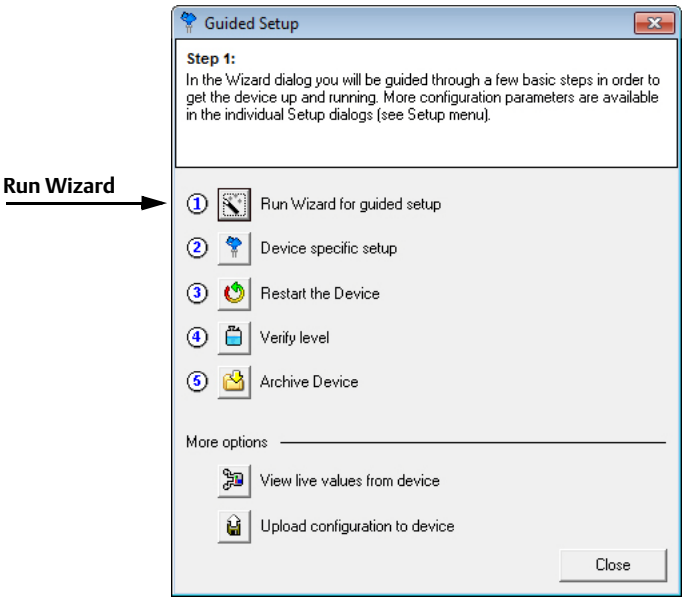

2. Start the Configuration Wizard.

   In the *Guided Setup* window, click the **Run Wizard for guided setup** button and follow the instructions.

   Now you will be guided through a short transmitter installation procedure.

NOTE:
The Guided Setup is an extended installation guide that includes more than just the configuration Wizard. It can be disabled by deselecting the **Open Guided Setup dialog after Connect** check box in the *Application Preferences* window (select **View** > **Application Preferences** and then click the **View Options** tab).

Device properties

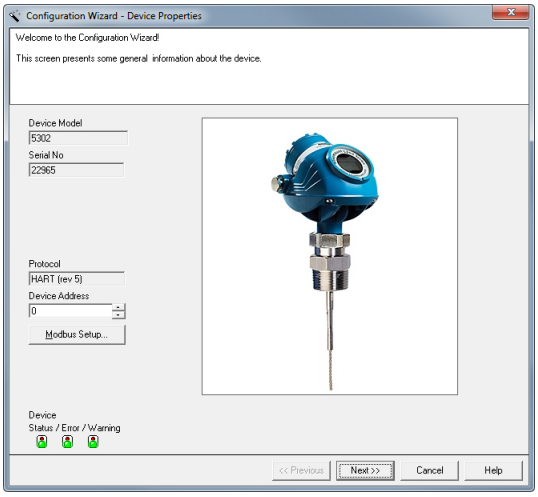

3. Check the device properties

   The first window in the configuration wizard presents general information stored in the transmitter database such as device model, serial number, communication protocol and device address.
   Check that the information complies with the ordering information.

General information

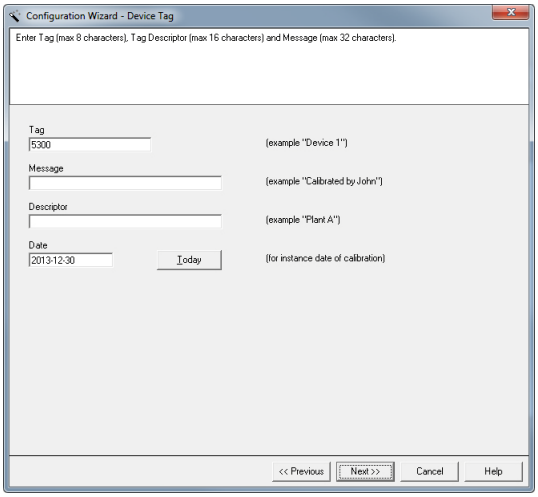

4. Enter device Information

   HART command: [2, 2, 1].

   This window lets the user enter tag, message, descriptor, and date. The information is not required for the operation of the transmitter and can be left out if desired.

Units

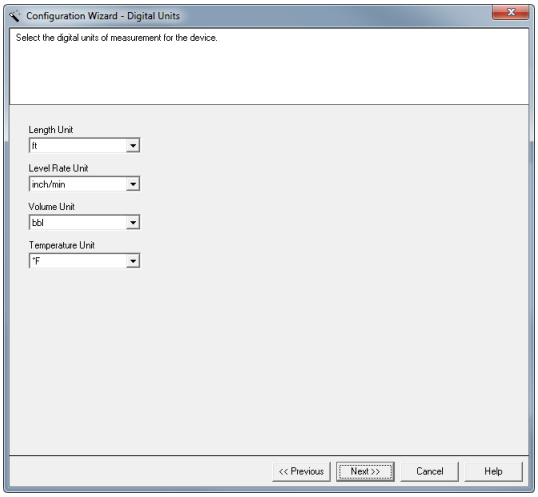

5. Select the digital units of measurement for the device.

   HART command: [2, 1, 1].

   FOUNDATION fieldbus parameters:

   TRANSDUCER 1100 > RADAR_LEVEL_RANGE
   TRANSDUCER 1100 > RADAR_LEVELRATE_RANGE
   TRANSDUCER 1100 > RADAR_VOLUME_RANGE
   TRANSDUCER 1100 > RADAR_INTERNAL_TEMPERATURE_RANGE

Probe

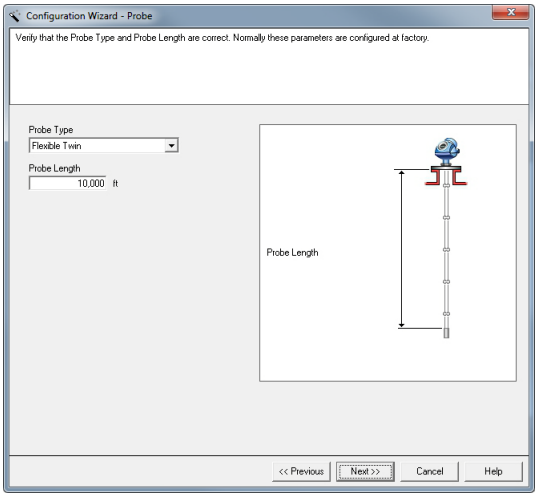

6. Probe settings

   HART command: [2, 1, 2].

   FOUNDATION fieldbus parameters:

   TRANSDUCER 1100 > PROBE_TYPE
   TRANSDUCER 1100 > PROBE_LENGTH

   Check that the correct probe type is chosen. Normally, the probe type is pre-configured at the factory, but if the current configuration does not match the actual probe, choose the correct **Probe Type** from the list.

   The Rosemount 5300 Series transmitter automatically makes some initial calibrations based on the chosen **Probe Type**. The following probe types are available:

   - Rigid twin
   - Flexible twin
   - Coaxial, coaxial HP, coaxial HTHP
   - Rigid single, rigid single HTHP/HP/C, rigid single PTFE
   - Flexible single, flexible single HTHP/HP/C, flexible single PTFE

   The **Probe Length** is the distance from the upper reference point to the end of the probe, see Figure 5-4. If the probe is anchored to a weight, do not include the height of the weight. The probe length needs to be changed if, for example, the probe is shortened.

Geometry

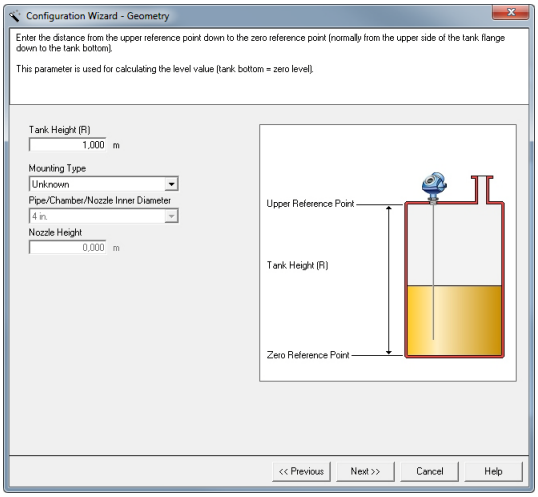

7. Geometry

   HART command: [2, 1, 3].

   FOUNDATION fieldbus parameter:

   TRANSDUCER 1100 > GEOM_TANK_HEIGHT
   TRANSDUCER 1100 > MOUNTING_TYPE
   TRANSDUCER 1100 > PIPE_DIAMETER
   TRANSDUCER 1100 > NOZZLE_HEIGHT

   Tank Height is the distance from the upper reference point to the lower reference point (see Figure 5-4 on page 74 and Figure 5-5 on page 75). The upper reference point is located at the bottom part of the threaded adapter, or at the underside of the welded flange.

   Make sure the Tank Height is as accurate as possible, since a Tank Height error results in a corresponding level value offset error.

   When specifying the Tank Height, keep in mind that this value is used for all level and volume measurements performed by the Rosemount 5300 Series transmitter.

   The Tank Height must be set in linear (level) units, such as feet or meters, regardless of primary variable assignment.

   Select the **Mounting Type** used.

   Select **Pipe/Chamber/Nozzle Inner Diameter** if using pipe, chamber or nozzle.

   Type **Nozzle Height** if using nozzle.

Tank environment

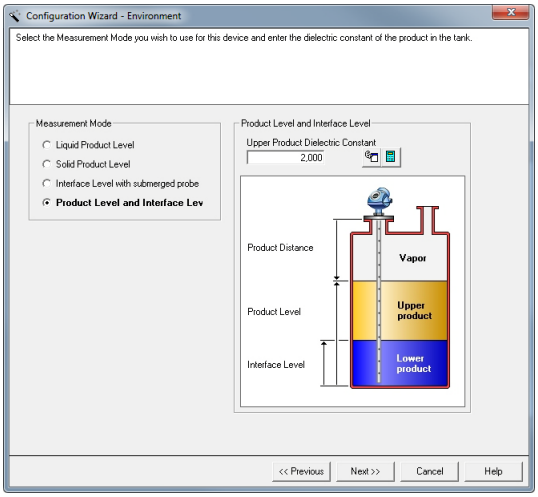

8. Specify tank environment

   HART command: [2, 1, 4].

   FOUNDATION fieldbus parameter:

   TRANSDUCER 1100 > MEAS_MODE
   TRANSDUCER 1100 > PRODUCT_DIELEC_RANGE
   TRANSDUCER 1100 > UPPER_PRODUCT_DC

Measurement Mode

Normally, the measurement mode does not need to be changed. The transmitter is pre-configured according to the specified model. See "Basic configuration parameters" on page 74 for more information.

Product dielectric range/Upper product dielectric constant

The dielectric constant of the product is used for setting the appropriate signal amplitude thresholds, see Section 7: Service and troubleshooting for more information on amplitude threshold settings.

For **interface level** measurements, the dielectric constant of the upper product is essential for calculating interface level and the upper product thickness. By default, the **Upper Product Dielectric Constant** parameter is about 2.

Set the **Upper Product Dielectric Constant** to a value that corresponds to the current product.

Rosemount Radar Master (RRM) includes tools to estimate the dielectric constant of the current product:

- The Dielectric Constant Chart lists the dielectric constant of a large number of products. The Dielectric Constant Chart can be opened with one of the following methods:
  - Select **View** > **Dielectric Constant Chart** menu option.
  - In the *Configuration Wizard - Environment* window, click the **Dielectric Chart button** .
  - Select **Setup** > **Tank**, click the **Environment** tab, and then click the **Dielectric Constant Chart** button .
- The Upper Product Dielectric Constant Calculator lets you calculate the dielectric constant of the upper product based on the following input:
  - actual upper product thickness,
  - the dielectric constant value stored in the transmitter, and
  - the upper product thickness presented by the transmitter.

  The Upper Product Dielectric Constant Calculator is available via the dielectric calculator button in the *Configuration Wizard - Environment* window or the *Tank/Environment* window.

Volume

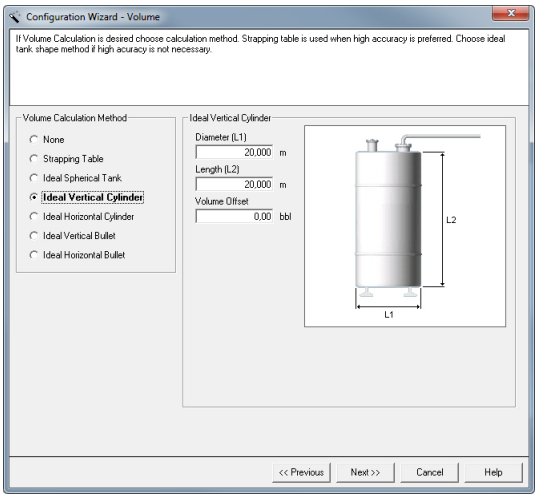

9. Choose Volume Calculation Method

   HART command: [2, 1, 5].

   FOUNDATION fieldbus parameters:

   Calculation method:
   TRANSDUCER 1300 > VOL_VOLUME_CALC_METHOD

   Tank diameter:
   TRANSDUCER 1300 > VOL_IDEAL_DIAMETER

Tank length:
TRANSDUCER 1300 > VOL_IDEAL_LENGTH

Volume offset:
TRANSDUCER 1300 > VOL_VOLUME_OFFSET

To use volume calculation, choose a pre-defined calculation method based on the tank shape that best corresponds to the actual tank. See "Volume configuration" on page 77.

Use the Strapping Table option if the actual tank does not match any of the available options for pre-defined tanks, or if higher calculation accuracy is desired.

Choose None if volume calculation is not desired at all.

The following standard tank shapes are available:

- Vertical cylinder
- Horizontal cylinder
- Vertical bullet
- Horizontal bullet
- Sphere
- None

The following parameters must be entered for a standard tank shape:

- Tank diameter
- Tank height/length (not for spherical tanks)
- Volume offset: use this parameter if you do not want zero volume and zero level to match (for example if you want to include a volume below the zero level)

Analog output (HART)

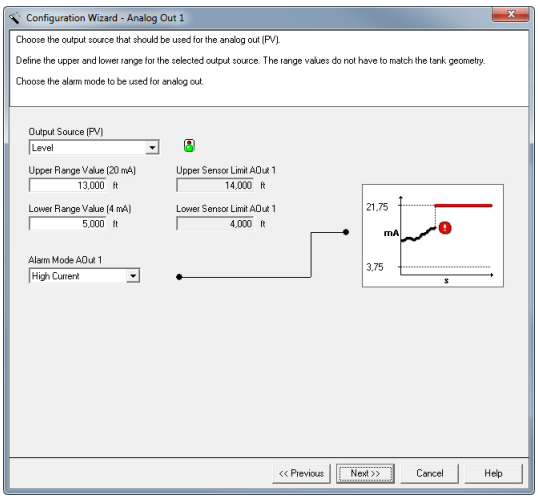

10. Configure the analog output

    HART command: [2,1, 6].

Analog output is not available for FOUNDATION fieldbus.

Typically, the **Primary Variable** (PV) is configured to be product level, interface level, or volume. Other variables like product distance, interface distance, upper product thickness, etc. are available as well.

Specify the analog output range by setting the **Lower Range Value** (4 mA) and the **Upper Range Value** (20 mA) to the desired values.

The alarm mode specifies the output state when a measurement error occurs.

See also "Analog output (HART)" on page 80 for information on analog output configuration.

Finish Configuration Wizard

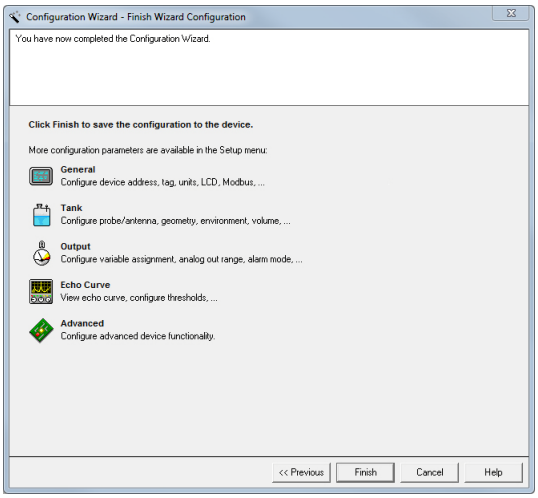

11. Finish Configuration Wizard

This is the last window in the Configuration Wizard concluding the basic configuration. The current configuration can be changed at any time by using the setup windows (General, Tank, Output etc., see "Using the setup functions" on page 89).
The setup windows contain further options not available in the Configuration Wizard. Click the Finish button and continue with the next step in the guided setup.

Device specific setup

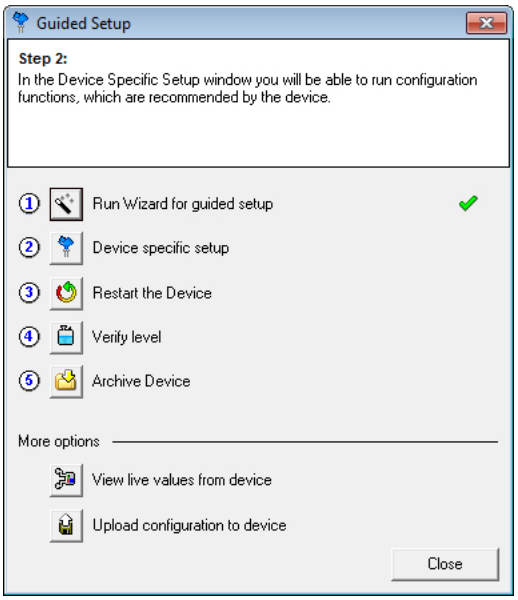

12. Click the **Device specific** setup button

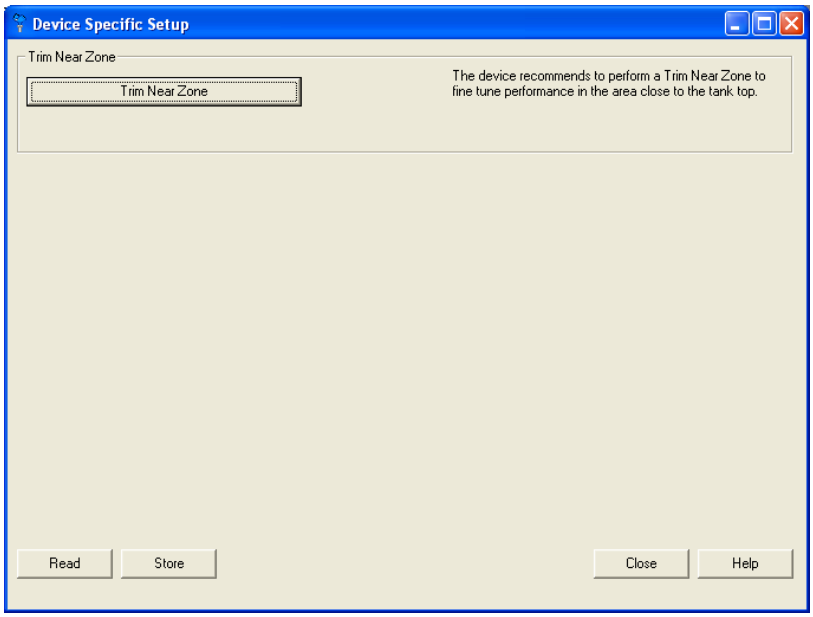

13. This window will show if any additional configuration is needed. Proceed to step 14 if no configuration is needed.

Trim Near Zone is described further in "Handling of disturbances from nozzle" on page 280.

Probe End Projection is described further in "Probe End Projection" on page 290.

Vapor compensation is described further in "Dielectric Constant settings" on page 294.

Choose the **tank material** if recommended.

Restart the Device

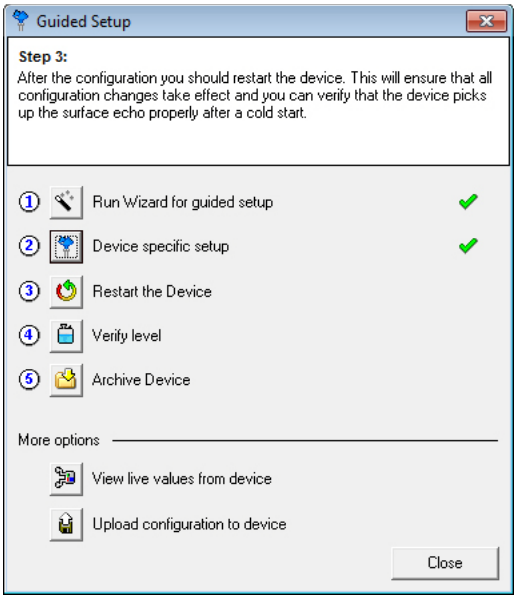

14. Restart the Device

When the transmitter is configured, it should be restarted to make sure that all configuration changes are properly activated and the transmitter performs as expected. It may take up to 60 seconds after the restart button is pressed until measurement values are updated.

Verify Level

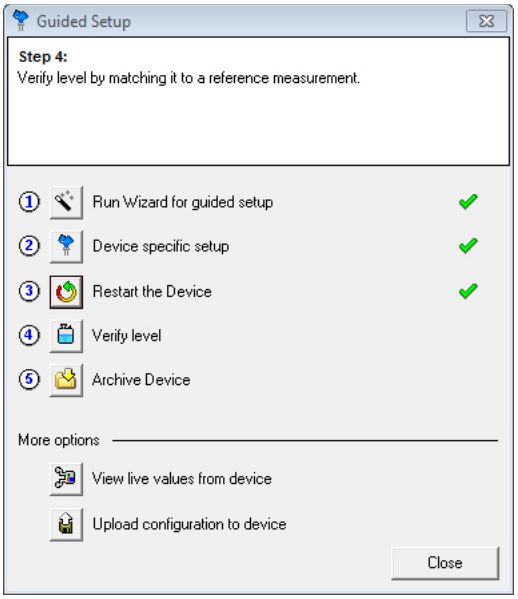

15. Verify Level

Run the Verify Level tool to match the product level reported by the device to a reference measurement (measured by using for example handgauging). If any difference, the Calibration Distance parameter will be adjusted as shown in Figure 5-14.

A minor adjustment using Calibration Distance is normal. There may, for example be a deviation between the actual tank height and the configured value.

Non-metallic (e.g. plastic) vessels and installation geometry may introduce an offset for the zero reference point. This offset may be up to ± 1 in. (25 mm). The offset can be compensated for by using Calibration Distance.

NOTE:
Before running Verify Level, make sure that; the product surface is calm, the tank is not being filled or emptied, and the actual level is well above the probe end.

Figure 5-14. Calibration Distance

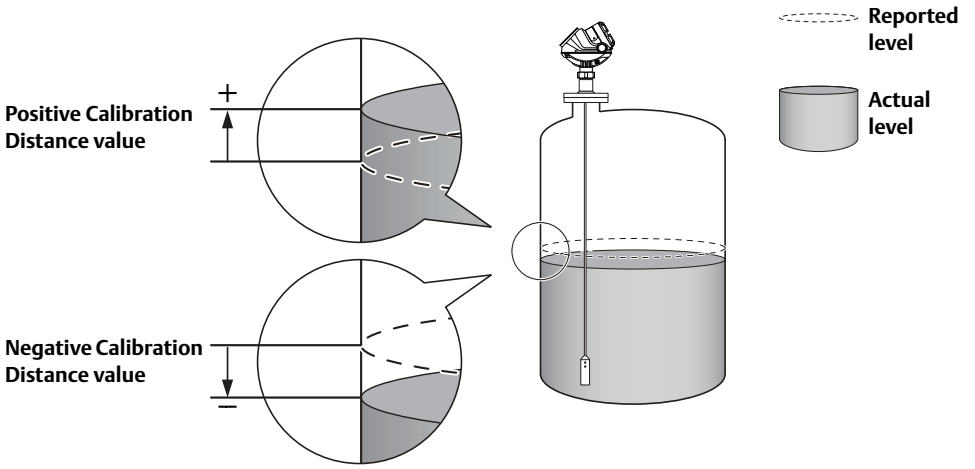

NOTE:
The offset (Calibration Distance parameter) is automatically set after completing the Verify Level method. An offset greater than 4 in. (100 mm) indicates a problem with the level measurement. Re-check configuration parameters. If these are correct, then view an echo plot and evaluate thresholds.

Archive Device

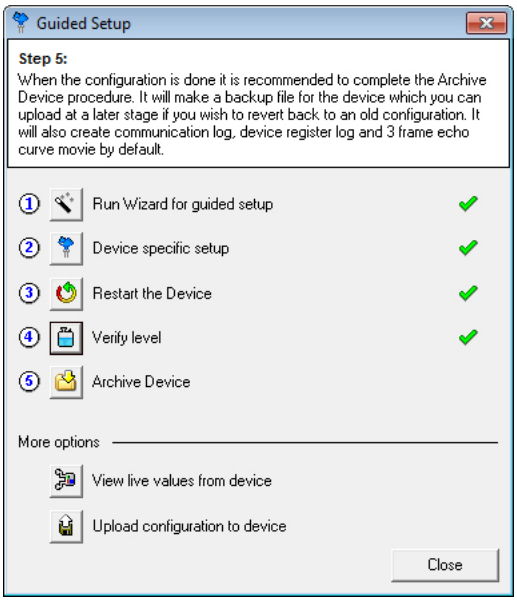

16. When configuration is finished, it is recommended that the configuration is saved to a backup file.

    This information may be useful for:

    - installing another Rosemount 5300 Series transmitter in a similar tank since the file can be directly uploaded to a new device
    - restoring the configuration, if for any reason, configuration data is lost or accidentally modified making the device inoperable

    The Archive Device function will create an information package for support purposes. The package includes a complete backup of the device, several logs, and echo curves.

View live values from device

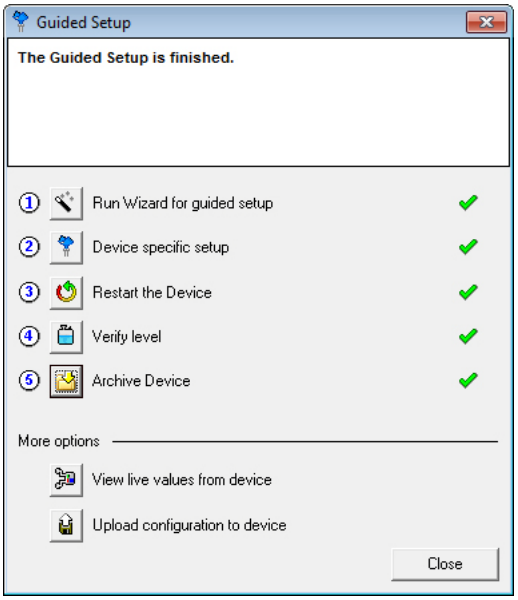

17. Click **View live values from device** to view measurement values in order to verify that the transmitter works correctly. If the measured values seem incorrect, configuration settings may need to be adjusted.

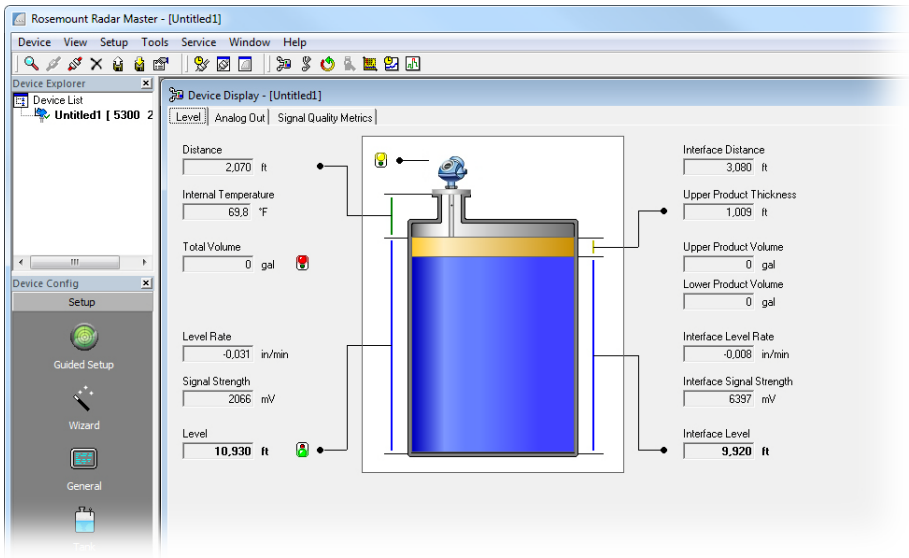

5.7 Basic configuration using AMS Suite (HART)

The Rosemount 5300 Series transmitter can be configured by using the AMS Suite software.

1. Start the *AMS Device Manager* and make sure that the transmitter connects.

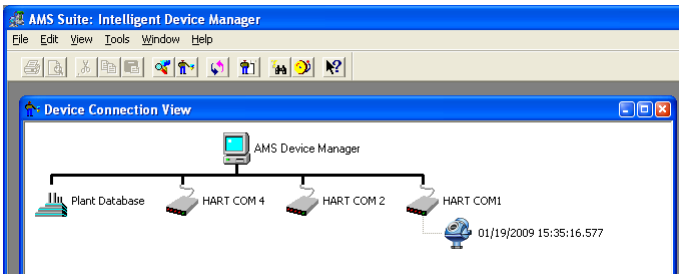

2. In the *Device Connection View*, click the right mouse button on the transmitter icon.

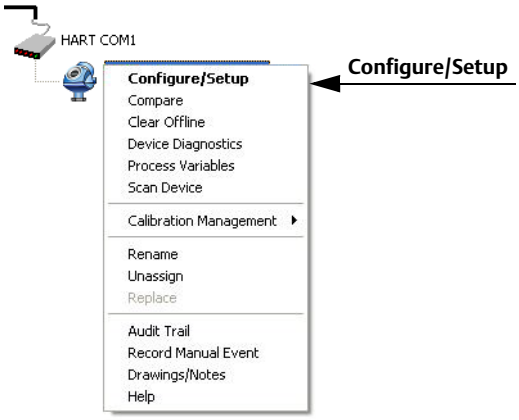

3. Choose the **Configure/Setup** option.

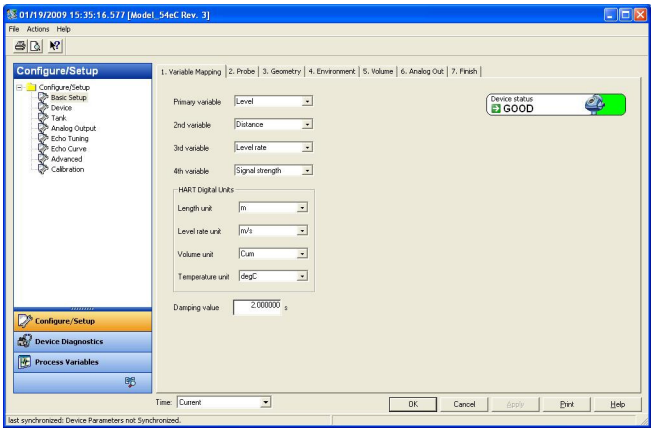

4. Choose the **Basic Setup** option.

5. Configure the transmitter by selecting the appropriate tab. See "Basic configuration parameters" on page 74 for information on the various configuration parameters.

5.8 Basic configuration using DeltaV

The Rosemount 5300 Series supports DD Methods for DeltaV to facilitate transmitter configuration. The following description shows how to use DeltaV with the AMS application to configure the Rosemount 5300 Series. The corresponding FOUNDATION fieldbus commands are also shown.

To configure the Rosemount 5300 Series with DeltaV:

1. From the **Start** menu, select **DeltaV** > **Engineering** > **DeltaV Explorer**.
2. Navigate through the file structure to find the Rosemount 5300 Series transmitter
3. Click the right mouse button on the Rosemount 5300 Series transmitter icon and choose **Properties**.

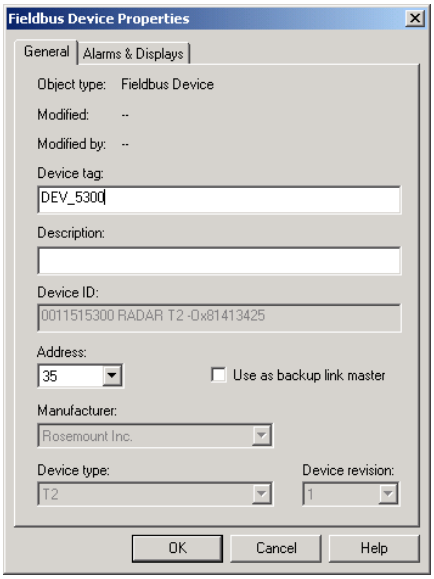

4. The Fieldbus Device Properties window lets you enter device tag and description. This information is not required for the operation of the transmitter and can be left out if desired.
   General information such as device type (5300), manufacturer, device ID are presented. The Rosemount 5300 Series device ID consists of the following components: *Manufacturer ID-Model-Serial Number.*
   Example: 0011515300 Radar T2-0x81413425.
   Check that the information complies with the ordering information.
5. Select the desired transmitter in the **DeltaV Explorer** and choose the **Configure** option.

6. Select the **TRANSDUCER1100** block and choose the **Probe** tab.

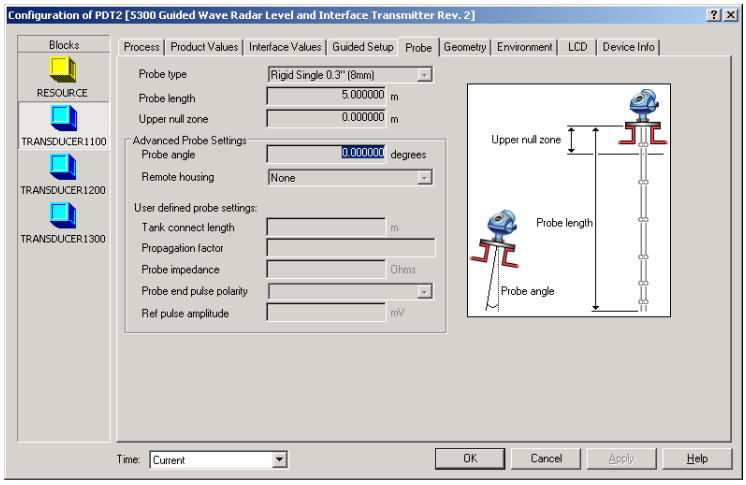

FOUNDATION fieldbus parameters:

TRANSDUCER 1100 > PROBE_TYPE
TRANSDUCER 1100 > PROBE_LENGTH
TRANSDUCER 1100 > GEOM_HOLD_OFF_DIST

Check that the correct **Probe type** is chosen. Normally, the probe type is pre-configured at the factory, but if the current configuration does not match the actual probe, choose the correct probe type from the list.

The Rosemount 5300 Series transmitter automatically makes some initial calibrations based on the chosen probe type. The following probes are available:

- Rigid twin
- Flexible twin
- Coaxial, coaxial HP, coaxial HTHP
- Rigid single, rigid single HTHP/HP/C, rigid single PTFE
- Flexible single, flexible single HTHP/HP/C, flexible single PTFE

The **Probe length** is the distance from the upper reference point to the end of the probe, see Figure 5-4. If the probe is anchored to a weight do not include the height of the weight. The probe length needs to be changed if, for example, the probe is shortened.

The **Hold Off Distance/Upper Null Zone (UNZ)** should not be changed unless there are disturbances at the top of the tank. By increasing the Hold Off Distance/UNZ, measurements in this region are avoided. See "Handling of disturbances from nozzle" on page 280 for more information on how to use the Hold Off Distance/UNZ. The Hold Off Distance/UNZ is equal to zero in the factory configuration.

7. Select the **TRANSDUCER1100** block and choose the **Geometry** tab.

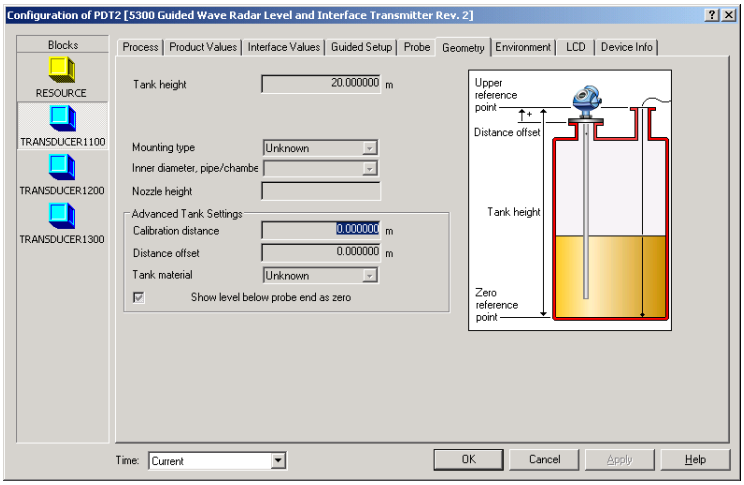

8. **Tank height** is the distance from the upper reference point to the tank bottom (see "Tank and probe geometry" on page 74). Make sure that this number is as accurate as possible.

9. Select the **Mounting type** used.

10. Select **Inner diameter** if using pipe, chamber, or nozzle.

11. Type **Nozzle Height** if using nozzle.

    FOUNDATION fieldbus parameter:

    TRANSDUCER 1100 > GEOM_TANK_HEIGHT
    TRANSDUCER 1100 > MOUNTING_TYPE
    TRANSDUCER 1100 > PIPE_DIAMETER
    TRANSDUCER 1100 > NOZZLE_HEIGHT

12. Select the **Environment** tab.

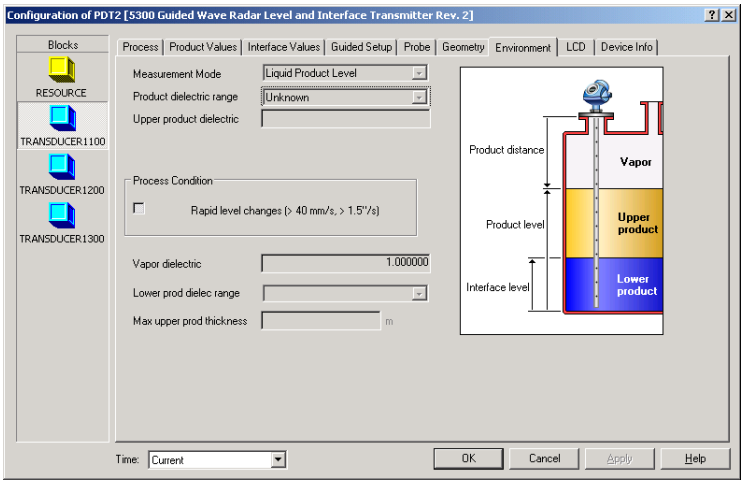

13. Normally, the measurement mode does not need to be changed. The transmitter is pre-configured according to the specified model.

Submerged is used for applications where the probe is fully submerged in liquid. In this mode, the transmitter ignores the upper product level. See "Interface measurements with fully submerged probes" on page 150 for more information.

NOTE:
Only use *Submerged* for applications where the interface is measured with a fully submerged probe.

FOUNDATION fieldbus parameter:
TRANSDUCER 1100>MEAS_MODE

Dielectric constant/dielectric range

The dielectric constant of the product is used for setting the appropriate signal amplitude thresholds, see Section 7: Service and troubleshooting for more information on amplitude threshold settings.

For **interface level** measurements, the dielectric constant of the upper product is essential for calculating interface level and the upper product thickness. By default, the **Upper product dielectric** parameter is about 2.

Set the **Upper product dielectric constant** to a value that corresponds to the current product.

FOUNDATION fieldbus parameters:
TRANSDUCER 1100 > PRODUCT_DIELEC_RANGE
TRANSDUCER 1100 > UPPER_PRODUCT_DC

Process conditions

Select the **Rapid level changes** check-box only if the surface is moving quickly up or down at rates over 1.5 in./s (40 mm/s).

FOUNDATION fieldbus parameter:
TRANSDUCER 1100 > ENV_ENVIRONMENT

14. To configure volume calculation, select the **TRANSDUCER1300** block and choose the Volume tab.

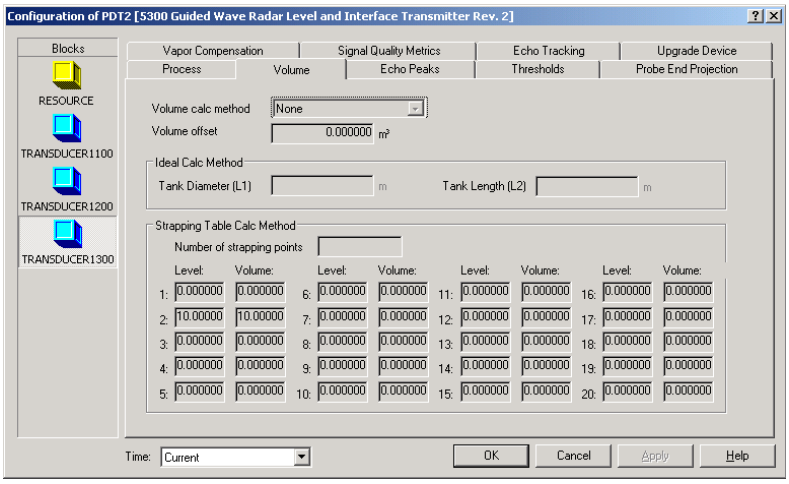

15. Choose a pre-defined calculation method based on a tank shape that corresponds to the actual tank. Choose None if volume calculation is not desired.
Use Volume offset if you do not want zero volume and zero level to match (for example if you want to include the product volume below the zero level).
The Strapping Table option is used if the actual tank does not match any of the available options for pre-defined tanks or if a higher calculation accuracy is desired.

Calculation method:
FOUNDATION fieldbus parameter:
TRANSDUCER 1300 > VOL_VOLUME_CALC_METHOD

Diameter:
FOUNDATION fieldbus parameter:
TRANSDUCER 1300 > VOL_IDEAL_DIAMETER

Tank length:
FOUNDATION fieldbus parameter:
TRANSDUCER 1300 > VOL_IDEAL_LENGTH

Volume offset:
FOUNDATION fieldbus parameter:
TRANSDUCER 1300 > VOL_VOLUME_OFFSET

See "Volume configuration" on page 77 for more information.

5.9 FOUNDATION fieldbus overview

Figure 5-15 illustrates how the signals are channeled through the transmitter.

Figure 5-15. Function block diagram for the Rosemount 5300 Series Radar Level Transmitters with FOUNDATION fieldbus

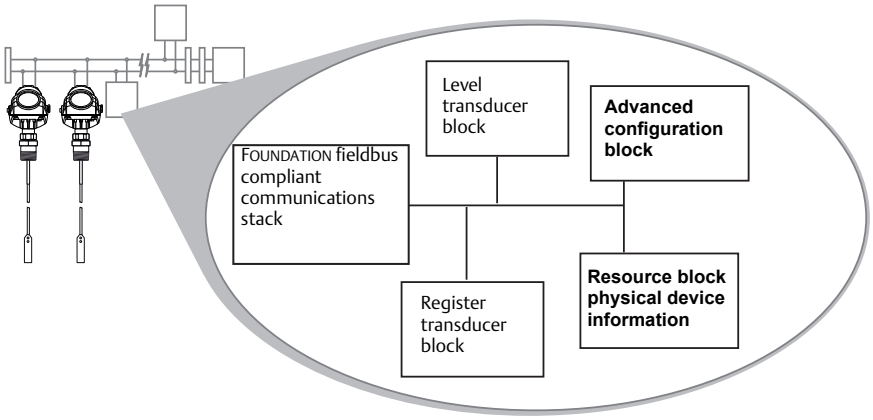

NOTE:
It is highly recommended that you limit the number of periodic writes to all static or non-volatile parameters such as HI_HI_LIM, LOW_CUT, SP, TRACK_IN_D, OUT, IO_OPTS, BIAS, STATUS_OPTS, SP_HI_LIM, and so on. Static parameter writes increment the static revision counter, ST_REV, and are written to the device's non-volatile memory. Fieldbus devices have a non-volatile memory write limit. If a static or non-volatile parameter is configured to be written periodically, the device can stop its normal operation after it reaches its limit or fail to accept new values.

This section provides a brief overview of FOUNDATION fieldbus block operation with the Rosemount 5300 Series Level Transmitter.

For detailed information about FOUNDATION fieldbus technology and function blocks used in the Rosemount 5300 Series, refer to the FOUNDATION fieldbus Block Manual (Document No. 00809-0100-4783).

5.9.1 Assigning device tag and node address

A Rosemount 5300 Series transmitter is shipped with a blank tag and a temporary address (unless specifically ordered with both) to allow a host to automatically assign an address and a tag. If the tag or address need to be changed, use the features of the configuration tool. The tool basically does the following:

1. Changes the address to a temporary address (248-251).
2. Changes the tag to a new value.
3. Changes the address to a new address.

When the transmitter is at a temporary address, only the tag and address can be changed or written to. The resource, transducer, and function blocks are all disabled.

5.9.2 FOUNDATION fieldbus block operation

Function blocks within the fieldbus device perform the various functions required for process control. Function blocks perform process control functions, such as Analog Input (AI) functions, as well as Proportional-Integral Derivative (PID) functions. The standard function blocks provide a common structure for defining function block inputs, outputs, control parameters, events, alarms, and modes, and combining them into a process that can be implemented within a single device or over the fieldbus network. This simplifies the identification of characteristics that are common to function blocks.

In addition to function blocks, fieldbus devices contain two other block types to support the function blocks. These are the **resource block** and the **transducer block**.

Resource blocks contain the hardware specific characteristics associated with a device; they have no input or output parameters. The algorithm within a resource block monitors and controls the general operation of the physical device hardware. There is only one resource block defined for a device.

Transducer blocks connect function blocks to local input/output functions. They read sensor hardware and write to effector (actuator) hardware.

Level transducer block

The level transducer block contains transmitter information including diagnostics and the ability to configure, set to factory defaults and restarting the transmitter.

Register transducer block

The register transducer block allows a service engineer to access all database registers in the device.

Advanced configuration transducer block

The advanced configuration transducer block contains functions such as amplitude threshold settings for filtering of disturbing echoes and noise, simulation of measurement values, and strapping table for volume measurements.

Resource block

The resource block contains diagnostic, hardware, electronics, and mode handling information. There are no linkable inputs or outputs to the resource block.

Analog Input block

Figure 5-16. Analog Input block

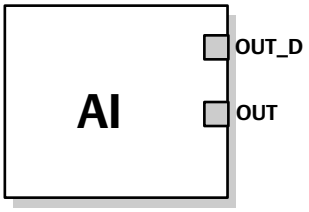

OUT = The block output value and status
OUT_D = Discrete output that signals a selected alarm condition

The Analog Input (AI) function block processes field device measurements and makes them available to other function blocks. The output value from the AI block is in engineering units and contains a status indicating the quality of the measurement. The measuring device may have several measurements or derived values available in different channels. Use the channel number to define the variable that the AI block processes and passes on to linked blocks. For further information refer to Appendix I: Analog-Input block.

For more information on the different function blocks refer to Appendix E: Level transducer block, Appendix F: Register transducer block, Appendix G: Advanced configuration transducer block, Appendix H: Resource transducer block and Appendix I: Analog-Input block.

Function block summary

The following function blocks are available for the Rosemount 5300 Series:

- Analog Input (AI)
- Proportional/Integral/Derivative (PID)
- Input Selector (ISEL)
- Signal Characterizer (SGCR)
- Arithmetic (ARTH)
- Output Splitter (OS)

For detailed information about FOUNDATION fieldbus technology and function blocks used in the Rosemount 5300 Series, refer to the FOUNDATION fieldbus Block Manual (Document No. 00809-0100-4783).

5.10 Configure the AI block

⚠ A minimum of four parameters are required to configure the AI block. The parameters are described below with example configurations shown at the end of this section.

CHANNEL

Select the channel that corresponds to the desired sensor measurement. The Rosemount 5300 measures Level (channel 1), Distance (channel 2), Level Rate (channel 3), Signal Strength (channel 4), Volume (channel 5), Internal Temperature (channel 6), Upper Product Volume (channel 7), Lower Product Volume (channel 8), Interface Distance (channel 9), Upper Product Thickness (channel 10), Interface Level (channel 11), Interface Level Rate (channel 12), Interface Signal Strength (channel 13), Signal Quality (channel 14), Surface/Noise Margin (channel 15), and Vapor DC (channel 16).

AI block	TB channel value	Process variable
Level	1	CHANNEL_RADAR_LEVEL
Ullage	2	CHANNEL_RADAR_ULLAGE
Level rate	3	CHANNEL_RADAR_LEVELRATE
Signal strength	4	CHANNEL_RADAR_SIGNAL_STRENGTH
Volume	5	CHANNEL_RADAR_VOLUME
Internal temperature	6	CHANNEL_RADAR_INTERNAL_TEMPERATURE
Upper product volume	7	CHANNEL_UPPER_PRODUCT_VOLUME
Lower product volume	8	CHANNEL_LOWER_ PRODUCT_VOLUME
Interface distance	9	CHANNEL_INTERFACE_ DISTANCE
Upper product thickness	10	CHANNEL_UPPER_ PRODUCT_THICKNESS
Interface level	11	CHANNEL_INTERFACE_LEVEL
Interface level rate	12	CHANNEL_INTERFACE_ LEVELRATE
Interface signal strength	13	CHANNEL_INTERFACE_ SIGNALSTRENGTH
Signal quality	14	CHANNEL_SIGNAL_QUALITY
Surface/noise margin	15	CHANNEL_ SURFACE_NOISE_MARGIN
Vapor DC	16	CHANNEL_VAPOR_DC

L_TYPE

The L_TYPE parameter defines the relationship of the transmitter measurement (level, distance, level rate, signal strength, volume, and average temperature) to the desired output of the AI block. The relationship can be direct or indirect root.

Direct

Select direct when the desired output will be the same as the transmitter measurement (level, distance, level rate, signal strength, volume, and internal temperature).

Indirect

Select indirect when the desired output is a calculated measurement based on the transmitter measurement (level, distance, level rate, signal strength, volume, and internal temperature). The relationship between the transmitter measurement and the calculated measurement will be linear.

Indirect square root

Select indirect square root when the desired output is an inferred measurement based on the transmitter measurement and the relationship between the sensor measurement and the inferred measurement is square root (e.g. level).

XD_SCALE and OUT_SCALE

The XD_SCALE and OUT_SCALE each include three parameters: 0%, 100%, and engineering units. Set these based on the L_TYPE:

L_TYPE is direct

When the desired output is the measured variable, set the XD_SCALE to represent the operating range of the process. Set OUT_SCALE to match XD_SCALE.

L_TYPE is indirect

When an inferred measurement is made based on the sensor measurement, set the XD_SCALE to represent the operating range that the sensor will see in the process. Determine the inferred measurement values that correspond to the XD_SCALE 0 and 100% points and set these for the OUT_SCALE.

L_TYPE is indirect square root

When an inferred measurement is made based on the transmitter measurement and the relationship between the inferred measurement and sensor measurement is square root, set the XD_SCALE to represent the operating range that the sensor will see in the process. Determine the inferred measurement values that correspond to the XD_SCALE 0 and 100% points and set these for the OUT_SCALE.

Engineering units

NOTE:
To avoid configuration errors, only select engineering units for XD_SCALE and OUT_SCALE that are supported by the device.

The supported units are:

Table 5-7. Length

Display	Description
m	meter
cm	centimeter
mm	millimeter
ft	feet
in	inch

Table 5-8. Level rate

Display	Description
m/s	meter per second
m/h	meter per hour
ft/s	feet per second
in/m	inch per minute

Table 5-9. Temperature

Display	Description
°C	Degree Celsius
°F	Degree Fahrenheit

Table 5-10. Signal strength

Display	Description
mV	millivolt

Table 5-11. Volume

Display	Description
m^3	Cubic meter
L	Liter
in^3	Cubic inch
ft^3	Cubic feet
Yd^3	Cubic yard
Gallon	US gallon
ImpGall	Imperial gallon
Bbl	Barrel (oil, 42 US gallons)

5.10.1 Application example 1

Radar level transmitter, level value

A level transmitter is measuring the level in a 33 ft. (10 m) high tank.

Figure 5-17. Situation diagram

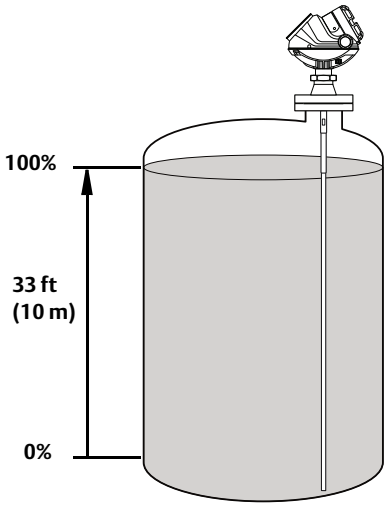

Solution

Table 5-12 lists the appropriate configuration settings, and Figure 5-18 illustrates the correct function block configuration.

Table 5-12. Analog Input function block configuration for a typical level transmitter

Parameter	Configured values
L_TYPE	Direct
XD_SCALE	Not Used
OUT_SCALE	Not Used
CHANNEL	CH1: Level

Figure 5-18. Analog Input function block diagram for a typical level transmitter

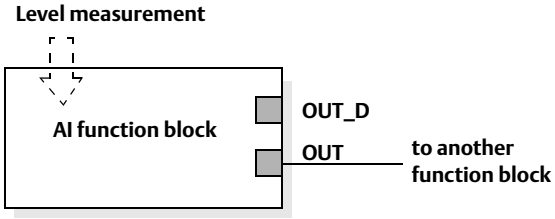

5.10.2 Application example 2

Radar level gauge, level value in percent (%)

The maximum level in the tank is 46 ft. (14 m). The level value is displayed in percentage of the full span (see Figure 5-19).

Figure 5-19. Situation diagram

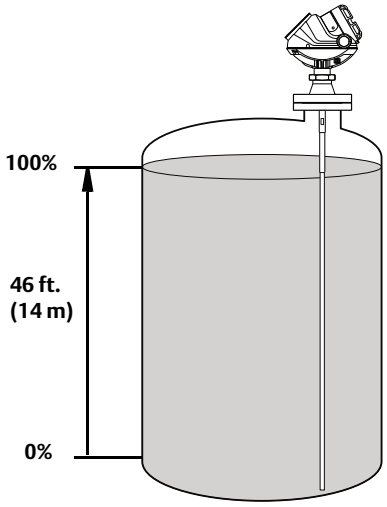

Solution

Table 5-13 lists the appropriate configuration settings, and Figure 5-20 illustrates the correct function block configuration.

Table 5-13. Analog Input function block configuration for a level transmitter where level output is scaled between 0-100%

Parameter	Configured values
L_TYPE	Indirect
XD_SCALE	0 to 14 m
OUT_SCALE	0 to 100%
CHANNEL	CH1: Level

Figure 5-20. Function block diagram for a level transmitter where level output is scaled between 0-100%

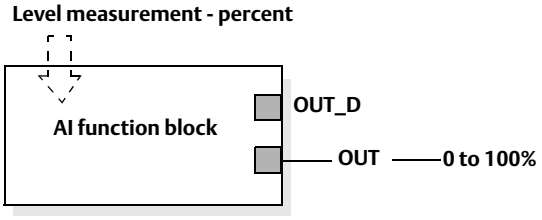

5.10.3 Application example 3

Radar level transmitter, product level, and interface level value

A level transmitter is measuring the product level and the interface level in a 33 ft. (10 m) high tank. The maximum interface level is 10 ft. (3 m).

Figure 5-21. Situation diagram

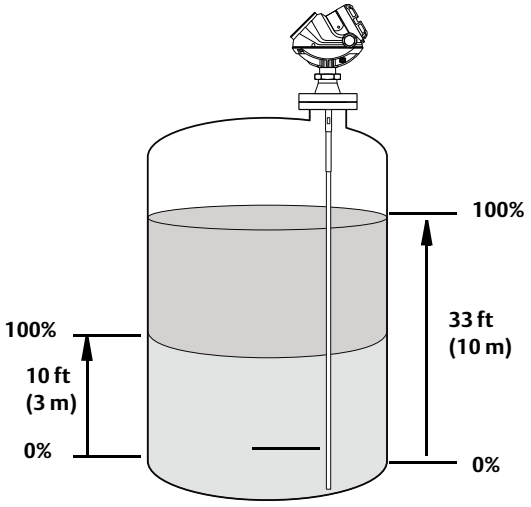

Solution

Table 5-14 lists the appropriate configuration settings, and Figure 5-22 illustrates the correct function block configuration.

Table 5-14. Analog Input function block configuration for a level and interface transmitter

AI function block product level		AI function block interface level	
Parameter	**Configured values**	**Parameter**	**Configured values**
L_TYPE	Direct	L_TYPE	Direct
XD_SCALE	Not used	XD_SCALE	Not used
OUT_SCALE	Not used	OUT_SCALE	Not used
CHANNEL	CH1: level	CHANNEL	CH11: interface level

Figure 5-22. Analog Input function block diagram for a level and interface transmitter

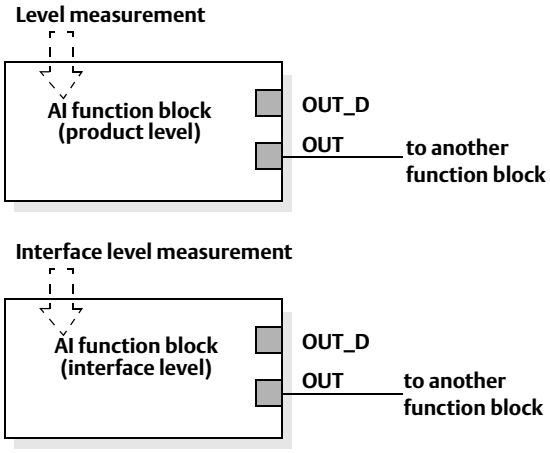

5.11 Tri-Loop HART-to-Analog converter

The Rosemount 333 HART Tri-Loop HART-to-Analog signal converter is capable of converting a digital HART Burst signal into three additional 4-20 mA analog signals.

To set the Rosemount 5300 Series transmitter up for the HART Tri-Loop:

1. Make sure the Rosemount 5300 Series transmitter is properly configured.

2. Assign transmitter variables Primary Variable, Secondary Variable etc.
   HART command [2,1,1].
   RRM: **Setup** > **Output/General**

Variables assignment

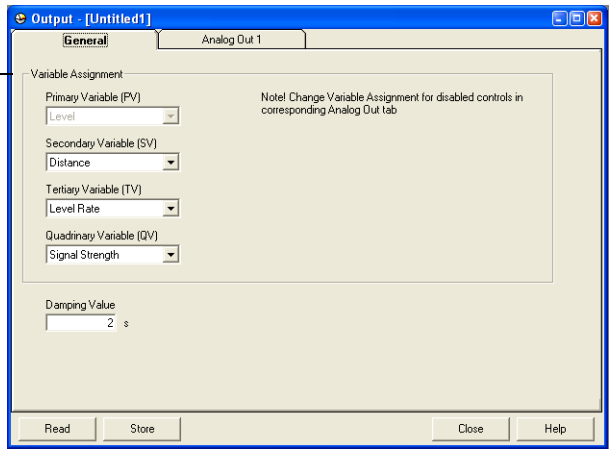

3. Configure variable units: length, level rate, volume and temperature.
   HART command [2,2,2,5].
   RRM: Setup > General/Units

Variable units

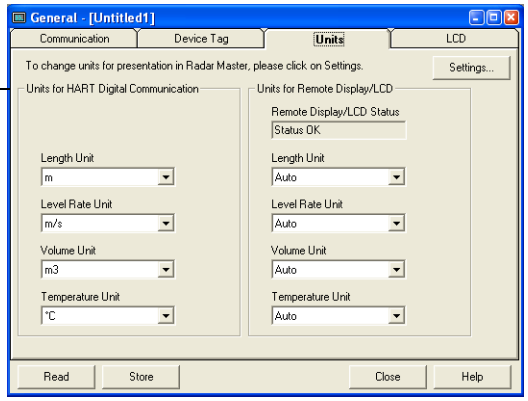

4. Set the Rosemount 5300 Series in Burst Mode.
   HART command [2,2,4,2].
   RRM: **Setup** > **General/Communication**

NOTE
Using a HART revision 7 device, the Rosemount 5300 Series supports up to 3 Burst messages. It can burst Cmd 1, 2, 3, 9, 33, 48. For command aggregation, Cmd78 is used.

Supported burst trigger modes in HART 7: Continuous, Windowed, Falling, and Rising.

5. Select burst option 3 = process variables and current (process vars/crnt).
   HART command [2,2,4,2,2].
6. Install the Tri-Loop. connect channel 1 wires, and optionally wires for channel 2 and channel 3.
7. Configure Tri-Loop channel 1:
   a. Assign variable: Tri-Loop HART command [1,2,2,1,1].
      Make sure that the SV, TV, and QV match the configuration of the Rosemount 5300 Series transmitter.
   b. Assign units: Tri-Loop HART command [1,2,2,1,2]. Make sure that the same units are used as for the Rosemount 5300 Series transmitter.
   c. Set the upper range value and the lower range value: Tri-Loop HART command [1,2,2,1,3-4].
   d. Enable the channel. Tri-Loop HART command [1,2,2,1,5].
8. (Optional) Repeat steps a-d for channels 2 and 3.
9. Connect wires to Tri-Loop burst input.
10. Enter the desired tag, descriptor, and message information:
    Tri-Loop HART command [1,2,3].
11. (Optional) If necessary, perform an analog output trim for channel 1 (and channel 2 and 3 if they are used).
    Tri-Loop HART command [1,1,4].

Figure 5-23. Tri-Loop wiring

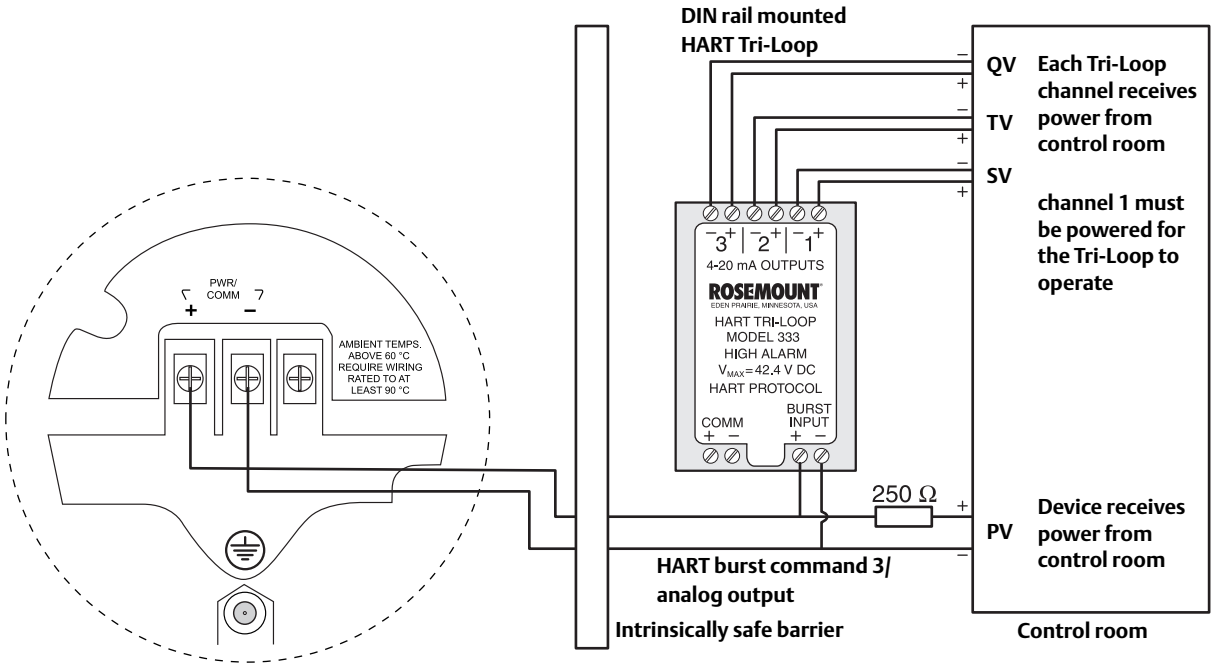

See the reference manual for the *Model 333 HART Tri-Loop HART-to-Analog Signal Converter* for further information on how to install and configure the Tri-Loop.

To turn off the Burst Mode

To turn off the Burst Mode, use one of the following options:

- The RRM program
- The Rosemount Burst Mode Switch software
- A Field Communicator
- The AMS software

5.12 HART multi-drop configuration

The Rosemount 5300 Series transmitter can be run in multidrop mode. In the multidrop mode each transmitter has a unique HART address.

Figure 5-24. Multidrop connection

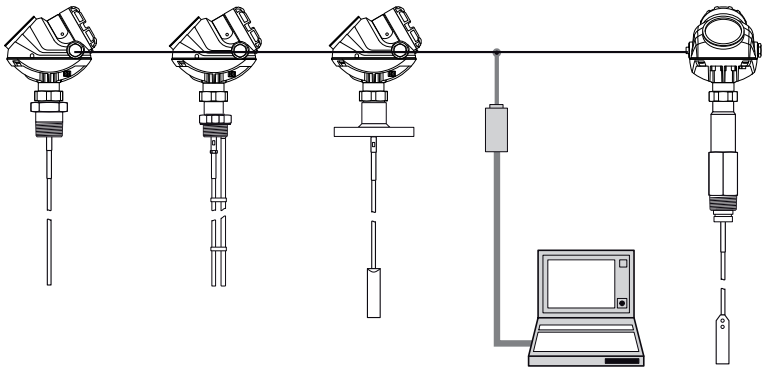

The poll address can be changed by using a field communicator or by using the Rosemount Radar Master software.

To change the poll address using a Field Communicator, choose HART command [2, 2, 4, 1].

To change the poll address using the Rosemount Radar Master (RRM) software:

1. Choose the **Setup** > **General** option

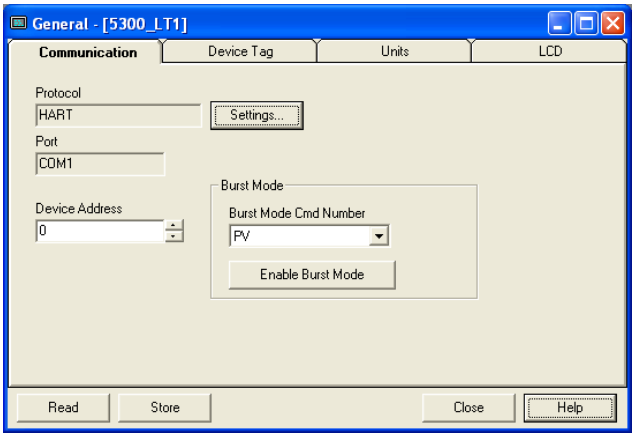

2. Select the **Communication** tab.
3. Set the desired address for multidrop operation.
   HART 5: addresses between 1 and 15
   HART 7: addresses between 1 and 63
4. Click the **Store** button to save the new address.

Section 6 Operation

Safety messages . . . . . page 127
Viewing measurement data . . . . . page 128

6.1 Safety messages

Procedures and instructions in this manual may require special precautions to ensure the safety of the personnel performing the operations. Information that raises potential safety issues is indicated by a warning symbol (⚠). Refer to the safety messages listed at the beginning of each section before performing an operation preceded by this symbol.

⚠ WARNING

Failure to follow these installation guidelines could result in death or serious injury.

Make sure only qualified personnel perform the installation.

Use the equipment only as specified in this manual. Failure to do so may impair the protection provided by the equipment.

Explosions could result in death or serious injury.

Verify that the operating environment of the transmitter is consistent with the appropriate hazardous locations certifications.

Before connecting a HART®-based communicator in an explosive atmosphere, make sure the instruments in the loop are installed in accordance with intrinsically safe or non-incendive field wiring practices.

Electrical shock could cause death or serious injury.

Use extreme caution when making contact with the leads and terminals.

High voltage that may be present on leads could cause electrical shock.

Probes covered with plastic and/or with plastic discs may generate an ignition-capable level of electrostatic charge under certain extreme conditions. Therefore, when the probe is used in a potentially explosive atmosphere, appropriate measures must be taken to prevent electrostatic discharge.

⚠ WARNING

Any substitution of non-authorized parts or repair, other than exchanging the complete transmitter head or probe assembly, may jeopardize safety and is prohibited.

Unauthorized changes to the product are strictly prohibited as they may unintentionally and unpredictably alter performance and jeopardize safety. Unauthorized changes that interfere with the integrity of the welds or flanges, such as making additional perforations, compromise product integrity and safety. Equipment ratings and certifications are no longer valid on any products that have been damaged or modified without the prior written permission of Emerson Process Management. Any continued use of product that has been damaged or modified without prior written authorization is at the customer's sole risk and expense.

6.2 Viewing measurement data

6.2.1 Using the display panel

The Rosemount 5300 Series transmitter uses an optional display panel for presentation of measurement data. When the transmitter is switched on, the display panel presents information such as transmitter model, measurement frequency, software version, communication type (HART, FF), serial number, HART identification tag, setting of write protection switch, and Analog Output settings.

When the transmitter is up and running, the display panel presents level, signal amplitude, volume, and other measurement data depending on the display panel configuration (see "Specifying display panel variables" on page 129). The available LCD parameters are listed in Table 6-1 on page 133.

The display has two rows, the upper row shows the measurement value and the lower row shows the parameter name and measurement unit. It toggles between the different measurement values every 2 seconds. The lower row toggles between parameter name and measurement unit each second.

Variables to be presented are configurable by using a Field Communicator, AMS, DeltaV or the Rosemount Radar Master software.

Figure 6-1. The Rosemount 5300 Series display panel

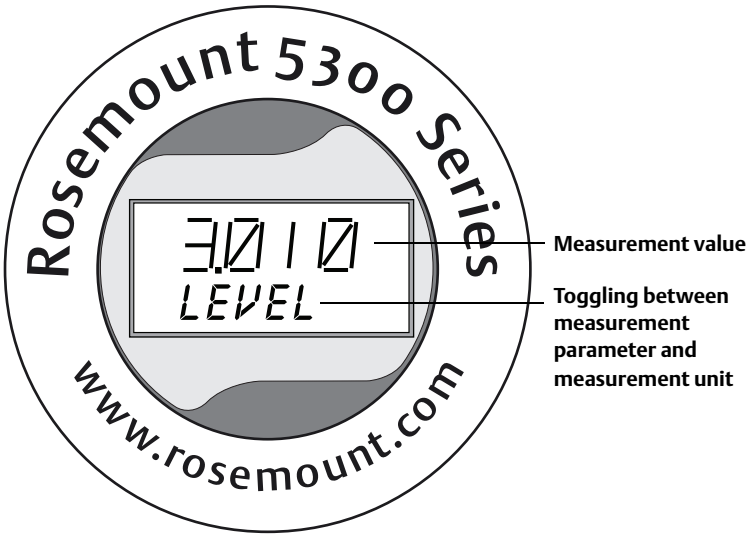

Error messages are listed in section "LCD Error Messages" on page 180.

6.2.2 Specifying display panel variables

It is possible to specify the variables to be presented on the display panel (LCD).

Using a Field Communicator

For a Field Communicator, the LCD settings are available with:
HART command [2, 2, 3].

FOUNDATION fieldbus parameters:
TRANSDUCER 1100 > LCD_PARAMETERS.

Using Rosemount Radar Master (RRM)

The LCD tab in the *General* window lets you specify which variables to view on the Display Panel screen:

1. Choose the **General** option from the **Setup** menu, or click the **General** icon in the **Device Configuration** window.

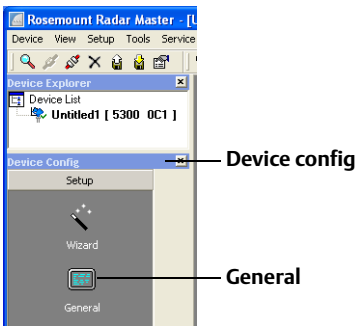

2. Select the **LCD** tab.

Figure 6-2. RRM lets you specify variables for the Rosemount 5300 Series display panel

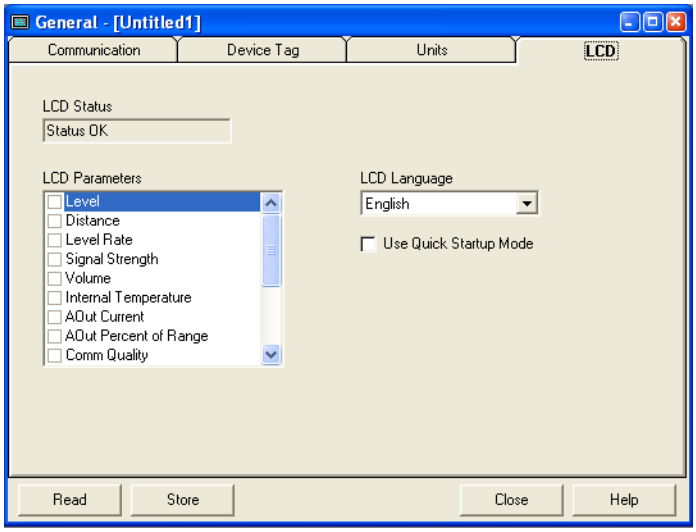

3. Select the variables to be shown on the display panel. The LCD will alternate between the selected items.
   The available LCD parameters are listed in Table 6-1 on page 133.

4. Click the **Store** button to save the LCD settings in the transmitter database.

Using AMS

The LCD tab in the *Configure/Setup* window lets you specify which variables to view on the Display Panel screen:

1. Select the transmitter icon in the AMS Suite *Device Connection View* window.
2. Click the right mouse button and choose the **Configure/Setup/Device** option.
3. Select the LCD tab and choose the desired LCD parameters and LCD measurement units. The available LCD parameters are listed in Table 6-1 on page 133.
4. Click the **OK** button to save the configuration and close the window.

Figure 6-3. The LCD tab in the AMS Suite configuration window lets you configure parameters to be presented on the Display Panel

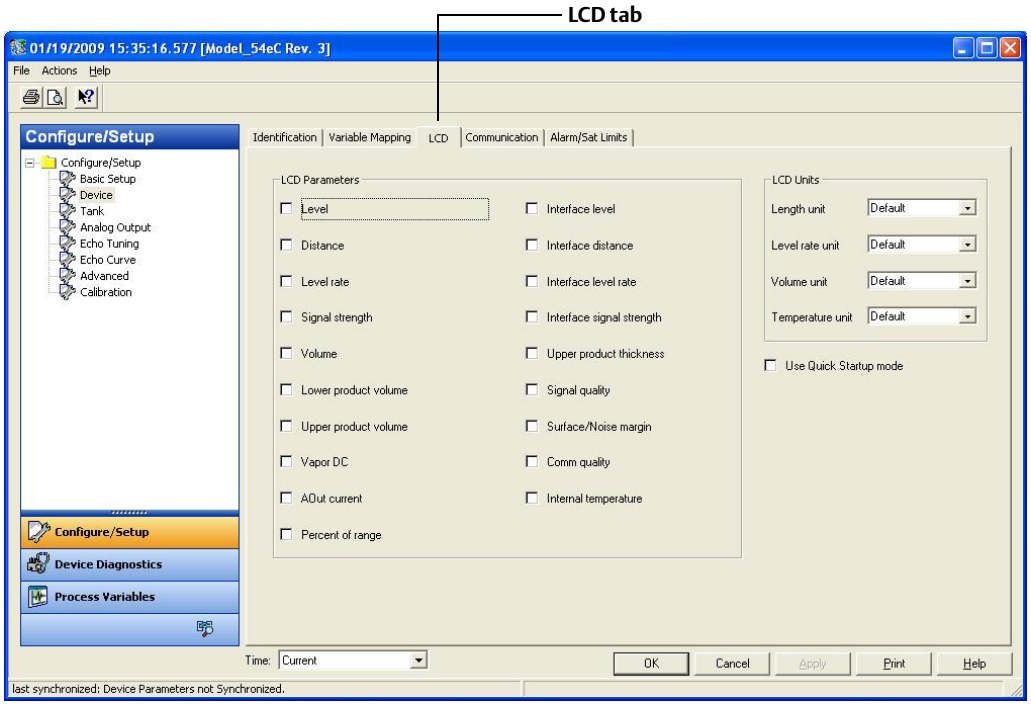

Using DeltaV

1. Click the right mouse button on the transmitter icon and choose the **Properties** option.
2. Select the **Transducer1100** block.
3. Select the **LCD** tab.

Figure 6-4. The Transducer 1100 block lets you specify variables for the Rosemount 5300Series display panel

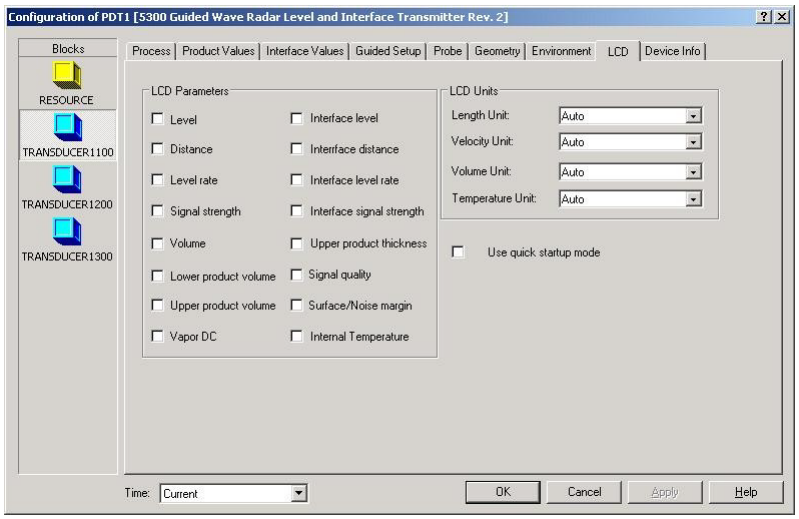

4. Choose the variables you want to appear on the display panel and the corresponding measurement units.
   You can specify the same measurement units as selected in the **Product Values** tab and in the **Interface Values** tab by choosing the **Auto** option for the LCD Unit.
   The LCD will alternate between the selected display parameters.
   The available LCD parameters are listed in Table 6-1 on page 133.
5. Click the **OK** button to save the LCD settings in the transmitter database.

LCD parameters

Table 6-1. LCD parameters and presentation on display

Parameter	Presentation on display	Description
Level	LEVEL	Product level.
Distance	DIST	Distance from the upper reference point to the product surface.
Level rate	LRATE	The speed of level movement up or down.
Signal strength	AMPL	The signal amplitude of the surface echo.
Volume	VOUME	Total product volume.
Internal temperature	INTEMP	Temperature inside the transmitter housing.
Analog output current	ANOUT	4 -20 mA current.
Percent range	%RANGE	Level value in percent of total measurement range.
Interface level	IFLVL	Level of the lower product.
Interface distance	IFDIST	Distance between the upper reference point and the interface between the upper and lower product.
Interface level rate	IFRATE	The speed of interface level movement up or down.
Interface signal strength	IFAMPL	The signal amplitude of the interface echo.
Volume lower	VOL LO	Product volume of lower product.
Volume upper	VOL UP	Product volume of upper product.
Upper product thickness	UPTKNS	Thickness of the upper product.
Signal quality	SIG Q	The signal quality.
Surface/noise margin	SNM	The relationship between the surface peak amplitude and the strongest noise peak amplitude.
Vapor DC	VAP DC	The vapor dielectric constant.

6.2.3 Viewing measurement data in RRM

To view measurement data such as level, signal strength, etc. in Rosemount Radar Master, choose the **Tools** > **Device Display** option and select the **Level** tab:

Figure 6-5. Presentation of measurement data in RRM

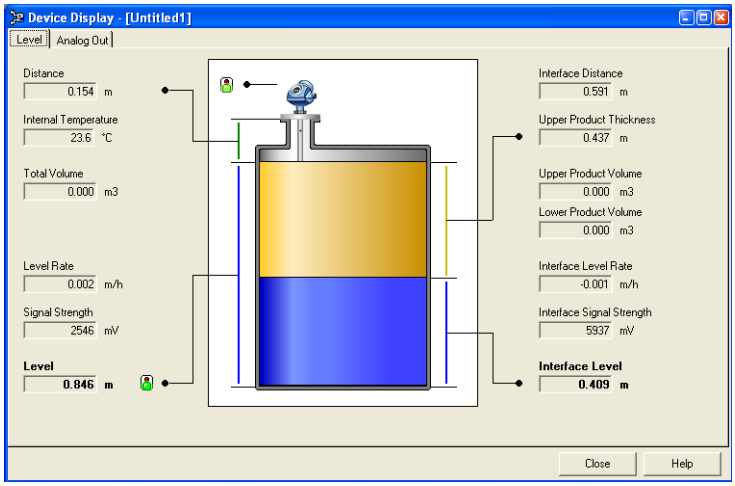

To view the analog output signal, choose the **Tools** > **Device Display** option and select the **Analog Out** tab:

Figure 6-6. Presentation of Analog Output value in RRM

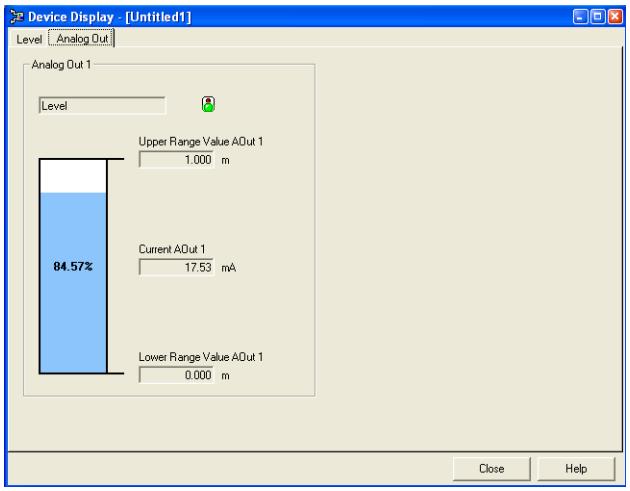

6.2.4 Viewing measurement data in AMS Suite

To view measurement data such as level, signal strength, etc. in the AMS Suite:

1. Select the transmitter icon in the AMS Suite *Device Connection View* window.
2. Click the right mouse button and choose the **Process Variables** option.

Figure 6-7. Presentation of measurement data in AMS Suite

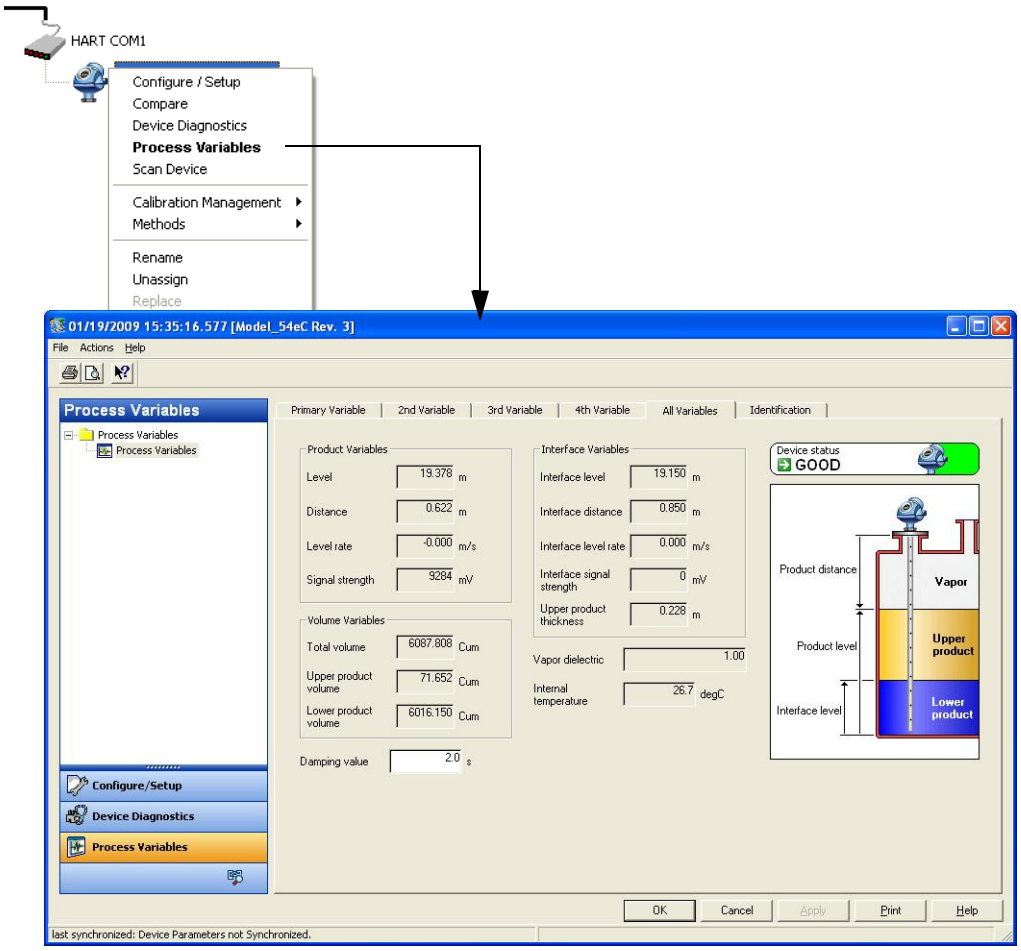

6.2.5 Viewing measurement data in DeltaV

1. Click the right mouse button on the transmitter icon and choose the **Properties** option.
2. Select the **Transducer1100** block.
3. Select the **Product Values** tab.
   For interface measurement, select the **Interface Values** tab.

Figure 6-8. Presentation of measurement data in DeltaV for the Rosemount 5300 Series

Level values

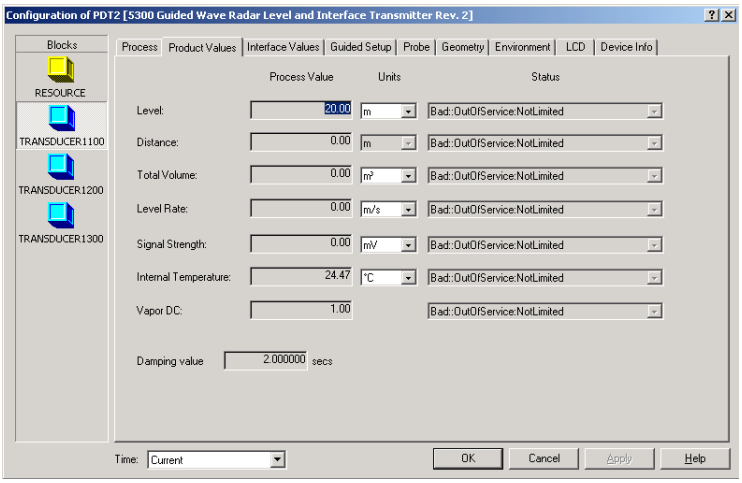

Interface level values

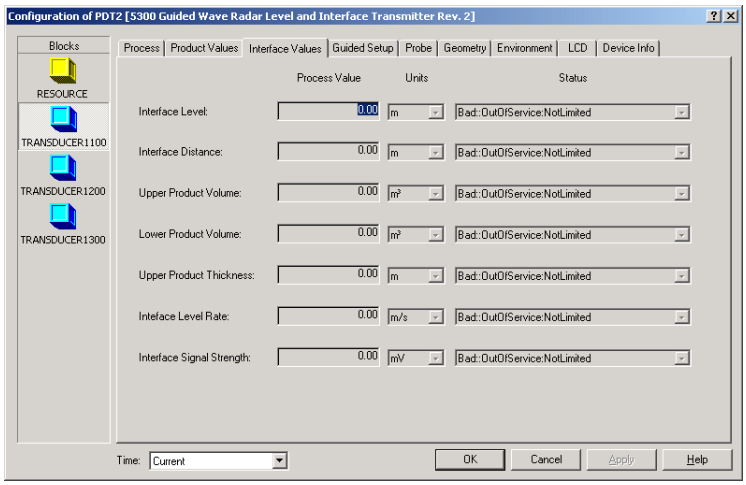

Section 7 Service and troubleshooting

Safety messages ..... page 137
Analyzing the measurement signal ..... page 139
Using the echo curve analyzer ..... page 140
Product Surface Peak not found ..... page 147
Interface Peak not found ..... page 148
Disturbance echo handling ..... page 149
Interface measurements with fully submerged probes ..... page 150
Analog output calibration ..... page 151
Level and distance calibration ..... page 152
Logging measurement data ..... page 154
Backing up the transmitter configuration ..... page 155
Configuration report ..... page 156
Reset to factory settings ..... page 157
Diagnostics ..... page 158
Using the Simulation Mode ..... page 160
Write protecting a transmitter ..... page 162
Enter Service Mode in RRM ..... page 162
Viewing Input and Holding Registers ..... page 162
Removing the transmitter head ..... page 164
Changing a probe ..... page 165
Diagnostic Messages ..... page 172
LCD Error Messages ..... page 180
LED Error Messages ..... page 181
Foundation fieldbus Error Messages ..... page 182

7.1 Safety messages

Procedures and instructions in this section may require special precautions to ensure the safety of the personnel performing the operations. Information that raises potential safety issues is indicated by a warning symbol (⚠). Please refer to the following safety messages before performing an operation preceded by this symbol.

⚠ WARNING

Explosions could result in death or serious injury.

Verify that the operating environment of the gauge is consistent with the appropriate hazardous locations certifications.

Before connecting a HART-based communicator in an explosive atmosphere, make sure the instruments in the loop are installed in accordance with intrinsically safe or non-incendive field wiring practices.

Do not remove the gauge cover in explosive atmospheres when the circuit is alive.

Failure to follow safe installation and servicing guidelines could result in death or serious injury.

Make sure only qualified personnel perform the installation.

Use the equipment only as specified in this manual. Failure to do so may impair the protection provided by the equipment.

Do not perform any service other than those contained in this manual unless you are qualified.

High voltage that may be present on leads could cause electrical shock.

Avoid contact with leads and terminals.

Make sure the main power to the Rosemount 5300 Transmitter is off and the lines to any other external power source are disconnected or not powered while wiring the gauge.

Probes covered with plastic and/or with plastic discs may generate an ignition-capable level of electrostatic charge under certain extreme conditions. Therefore, when the probe is used in a potentially explosive atmosphere, appropriate measures must be taken to prevent electrostatic discharge.

Process leaks could result in death or serious injury.

Make sure that the transmitter is handled carefully. If the Process Seal is damaged, gas might escape from the tank if the transmitter head is removed from the probe.

⚠ WARNING

Any substitution of non-authorized parts or repair, other than exchanging the complete transmitter head or probe assembly, may jeopardize safety and is prohibited.

Unauthorized changes to the product are strictly prohibited as they may unintentionally and unpredictably alter performance and jeopardize safety. Unauthorized changes that interfere with the integrity of the welds or flanges, such as making additional perforations, compromise product integrity and safety. Equipment ratings and certifications are no longer valid on any products that have been damaged or modified without the prior written permission of Emerson Process Management. Any continued use of product that has been damaged or modified without prior written authorization is at the customer's sole risk and expense.

7.2 Analyzing the measurement signal

Rosemount Radar Master (RRM) and other tools using enhanced EDDL has powerful functions for advanced troubleshooting. Using the Echo Curve plot function, an instant view of the tank signal is shown. Measurement problems can be solved by studying the position and amplitude of the different pulses.

Figure 7-1. The Echo Curve function presents all visible echoes

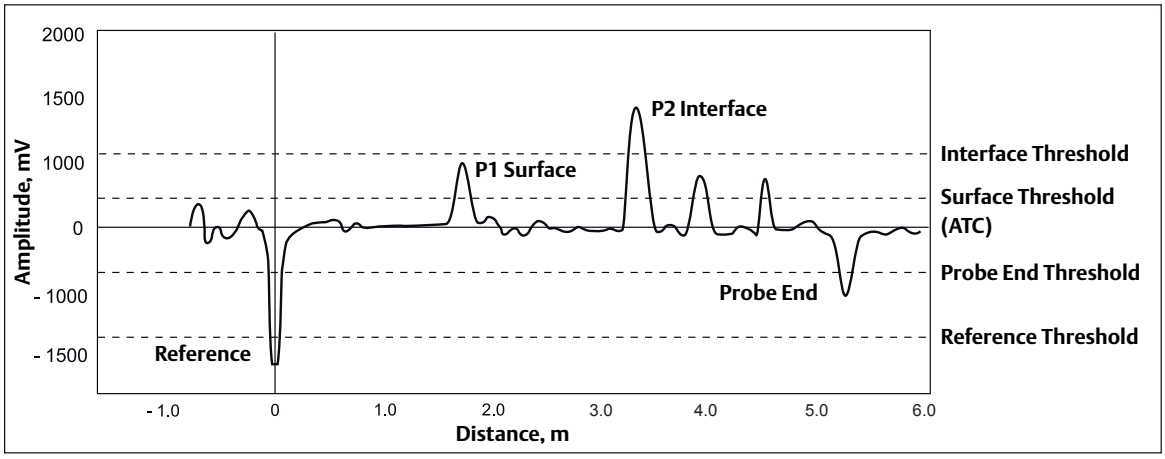

Echo peaks

In a typical measurement situation, the following peaks appear in the echo curve plot:

Reference echo peak - This peak is caused by the transition between transmitter and the tank vapor space or air. It is used by the transmitter as a starting reference point for distance to the level surface. The echo peak amplitude depends on the probe type and installation geometry.

Product surface echo peak - This peak indicates the product level and is caused by a reflection from the product surface. The signal strength of the reflection depends on the dielectric constant of the product.

Product with a high dielectric constant (for example water) gives better reflection (a strong signal amplitude) than product with a low dielectric constant (for example oil).

Interface surface echo peak - This peak indicates the interface level. The peak is caused by reflection from the interface between an upper product and a bottom product with a relatively high dielectric constant. This peak is shown when the Measurement Mode is set to Product Level and Interface Level or Interface Level with submerged probe.

Probe end echo peak - It is caused by reflection on the probe end. If the probe is grounded, the peak will be positive.

Amplitude thresholds

Different amplitude thresholds are used to filter out unwanted signals and to pick up the different pulses. The transmitter uses certain criteria to decide which type of pulse that is detected.

For example, counting from the top of the tank, the first echo found above the Surface Threshold is considered as the product surface, as illustrated in Figure 7-2. Other pulses further away from the top, although above the Surface Threshold, are ignored.

When the surface echo is found, the next pulse below the product surface and with a signal strength above the Interface Threshold, is considered as the Interface.

Figure 7-2. Threshold principle

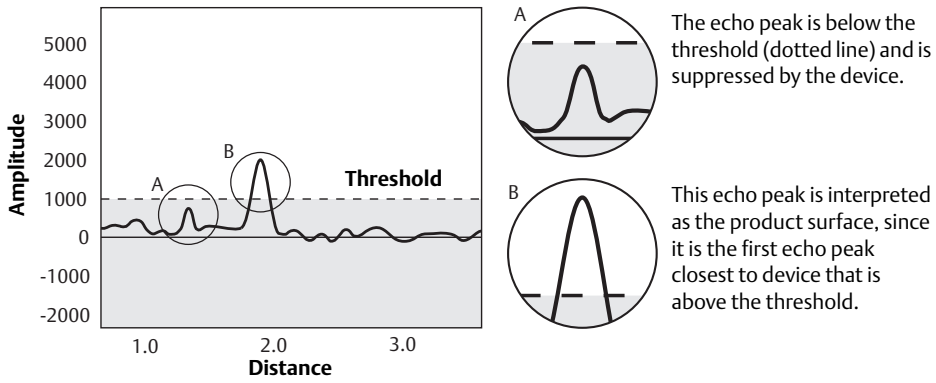

The following amplitude thresholds are used for the Rosemount 5300 Series transmitter:

Reference Threshold - Threshold to filter out noise in the echo curve for detection of the Reference peak. The reference peak is a strong negative echo very close to the device, see Figure 7-1 on page 139.

Surface Threshold - Amplitude threshold for detection of the Product level peak. Noise below the threshold is suppressed. The first echo peak closest to the device that crosses and is above the Surface Threshold is the surface echo.

The surface threshold is designed as a number of individually adjustable amplitude threshold points, the *Amplitude Threshold Curve* (ATC), see "Amplitude threshold curve" on page 149.

Interface Threshold - Threshold to filter out noise in the echo curve for detection of the Interface level peak. The first echo peak after the surface echo that crosses and is above the Interface Threshold is the interface echo peak.

Full Tank Threshold - Amplitude threshold that can be used to detect whether the probe is fully submerged in the upper product or not.

Probe End Threshold - Threshold to filter out noise in the echo curve for detection of the Probe End peak. The probe end peak is a fairly strong positive or negative echo (depending on probe type) that is present at the probe end when tank is empty.

7.3 Using the echo curve analyzer

The *Echo Curve Analyzer* in *Rosemount Radar Master* (RRM) shows the measurement signal amplitude from the top to the bottom of the tank. It includes functions for viewing and recording the Echo Curve, and advanced functions for configuration of amplitude thresholds

7.3.1 Using Rosemount Radar Master

To plot the measurement signal:

1. Start RRM.
2. Open **Device Config/Tools** (or **Device Config/Setup**).
3. Click the **Echo Curve** icon (see Figure 7-3).

Figure 7-3. The Echo Curve function is a useful tool for signal analysis

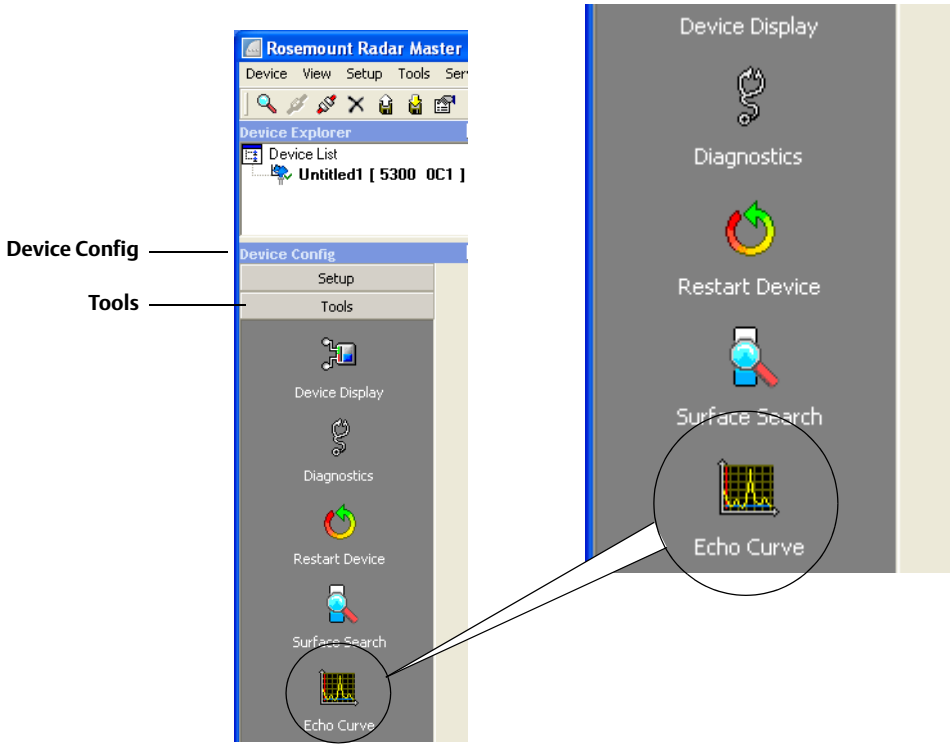

4. The *Echo Curve Analyzer* window appears with the View/Record Mode tab (or the Configuration Mode tab) selected.

The Configuration Mode tab

The Configuration Mode tab lets you adjust the different amplitude thresholds. When clicking the **Echo Curve** icon under **Device Config/Setup**, the *Echo Curve Analyzer* window appears with the Configuration Mode tab selected.

NOTE:
By manually changing the amplitude thresholds in the Echo Curve plot, the Automatic mode is disabled for the corresponding threshold (see "Threshold settings" on page 284 for more information on how to adjust the amplitude thresholds).

Figure 7-4. Echo Curve Analyzer plot in configuration mode

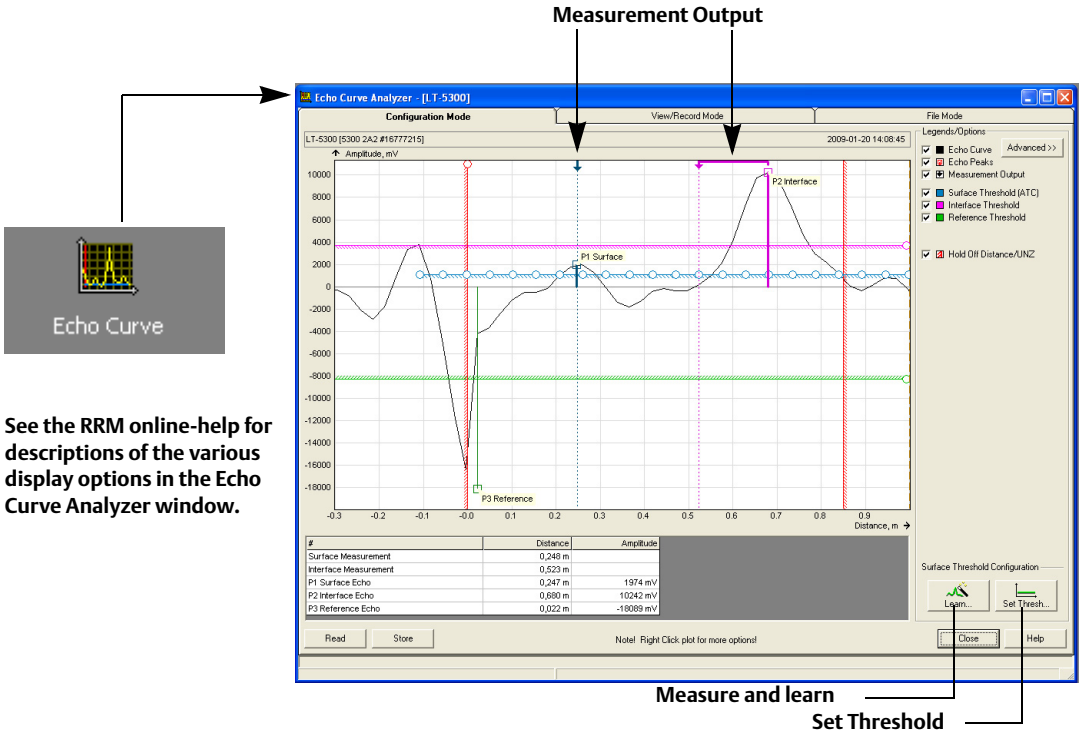

The current level Measurement Output from the device is presented with an arrow at the top of the plot.

Normally, the measurement output points directly at the surface echo peak, but if, for instance, the tank is empty, and there is no surface echo peak detected, the Measurement Output is still presented indicating the distance to the tank bottom.

In Figure 7-5, the interface output peak is pointing to the linear distance based on corrections for the dielectric of the material. The actual interface peak is at the electrical distance.

Measure and Learn function

The Measure and Learn function in *RRM* automatically creates an Amplitude Threshold Curve (ATC) by evaluating the current echo curve. The ATC is used for filtering out disturbing echoes

with an amplitude smaller than the product surface echo. The ATC is adapted to the shape of the measurement signal as described in "Disturbance echo handling" on page 149.

- In the *Echo Curve Analyzer/Configuration Mode* window, click **Learn** and follow the on-screen instructions.

The ATC can also be manually edited if further fine tuning is needed.

Modify Amplitude Threshold Curve (ATC)

Click and drag one circle at the time in the ATC in order to raise or lower the threshold at a certain position in the tank. You may zoom in (left click and drag) for higher resolution when modifying ATC points.

Set Surface Threshold to a fixed value

Click the **Set Threshold** button to set the ATC to a fixed value (a horizontal line).

Set Interface Threshold

Drag the circle on the right hand side to modify the threshold or right click the circle and select **Properties** to enter a value.

The View/Record Mode tab

The View/Record Mode tab presents a plot of the current tank conditions. Each radar echo is displayed as a peak in the signal plot.

When clicking the **Echo Curve** icon under **Device Config/Tools**, the *Echo Curve Analyzer* window appears with the View/Record Mode tab selected:

Figure 7-5. An Echo Curve plot in View/Record mode

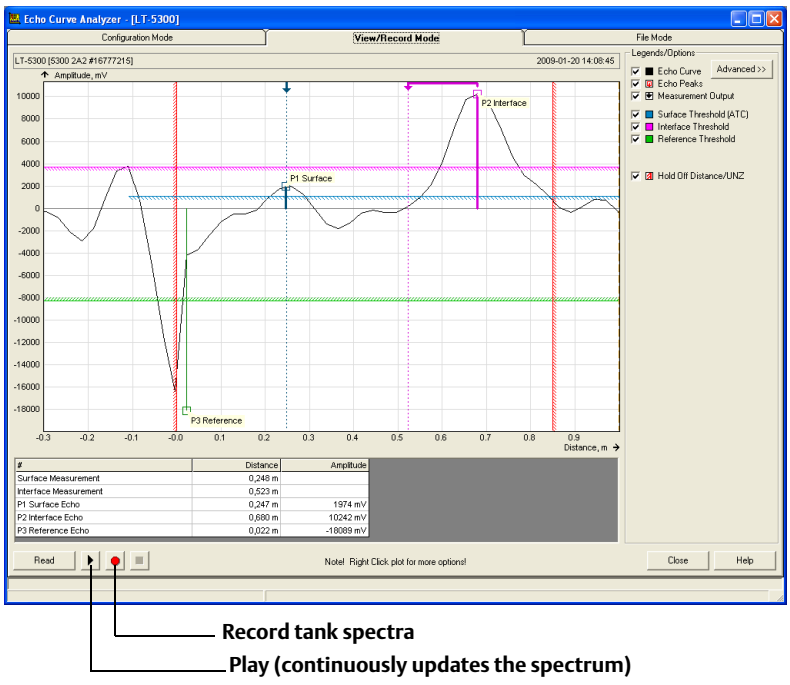

Advanced

The Advanced button opens a list below the Echo Curve plot with information about all echoes in the tank such as signal amplitude and position in the tank.

Play

When the Play button is clicked, the tank spectrum is continuously updated without being stored.

Record tank spectra

This function allows you to record tank spectra over time. This can be a useful function if, for example, you want to study the tank signal when filling or emptying the tank.

The File Mode tab

The File Mode tab lets you open files with saved snapshots/movies to be presented in the spectrum plot. A movie file can be played to view the amplitude plot at the desired update rate.

7.3.2 Using the Echo Curve Analyzer with a Field Communicator

The Field Communicator supports the Electronic Device Description Language (EDDL) with enhancements that allows you to view the Echo Curve, create an Amplitude Threshold Curve (ATC) and specify amplitude thresholds such as the Surface Threshold, Interface Threshold, and Reference Threshold.

Viewing the echo curve

To view the echo curve:

1. Select HART command [2, 6, 1].
   FOUNDATION fieldbus parameter:
   TRANSDUCER 1300 > AMPLITUDE_THRESHOLD_CURVE

   The echo curve appears on the display:

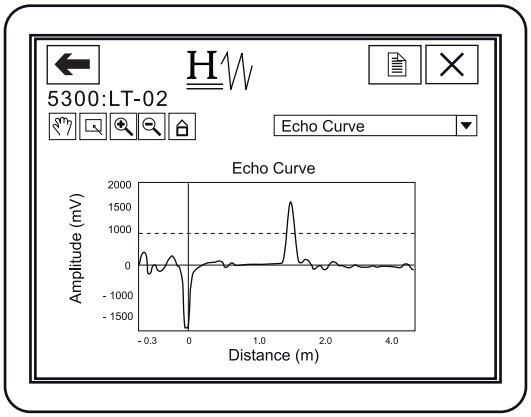

2. Use the Hand and Zoom tools to view specific parts of the Echo Curve. The drop down list allows you choose items, such as the different amplitude thresholds, to be displayed in the plot.

   The echo curve plot also shows an ATC if available. See *"Threshold settings" on page 146* for information on how to create an ATC with the *Measure and Learn* function.

Threshold settings

To adjust the amplitude thresholds:

1. Select HART command [2, 5, 2].
   FOUNDATION fieldbus parameter:
   TRANSDUCER 1300 > PROBE_END_THRESH
   TRANSDUCER 1300 > REFERENCE_THRESH
   TRANSDUCER 1300 > INTERFACE_THRESH
   TRANSDUCER 1300 > FULL_TANK_THRESH_OFFSET

   The different threshold options appear on the display:

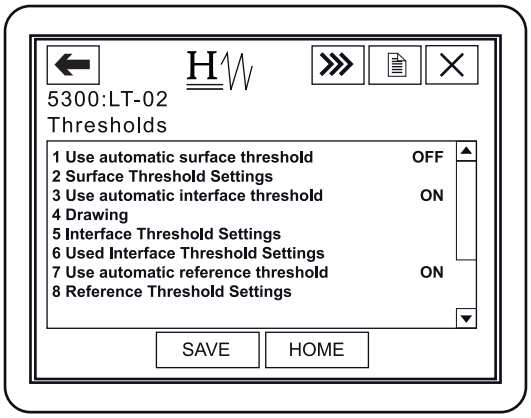

2. Open the desired option. For example, choosing option *2 Surface Threshold Settings* displays the following screen:

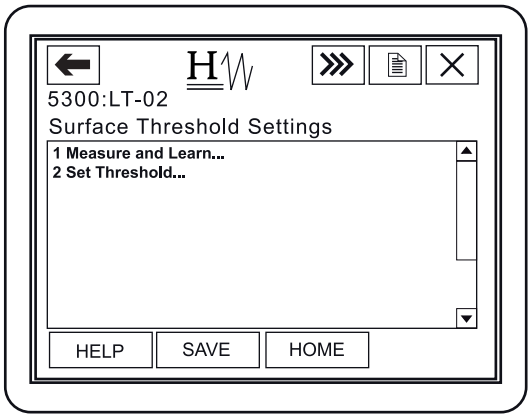

3. Option *1 Measure and Learn* lets you create an Amplitude Threshold Curve (ATC), see "Amplitude threshold curve" on page 149 for more information.
   Option *2 Set Threshold* lets you specify a constant Surface Threshold.

   See also "Analyzing the measurement signal" on page 139 and "Product Surface Peak not found" on page 147 for more information on how to use the amplitude thresholds.

4. Click the SAVE button to store the new settings in the transmitter database.

7.4 Product Surface Peak not found

The amplitude of the measurement signal, i.e. the amplitude of the signal that is reflected by the product surface, is related to the actual dielectric constant of the product. The amplitude threshold that is used by the transmitter is based on the parameter configuration of the current product dielectric constant (see section "Basic configuration parameters"). Normally no other threshold adjustment is needed, but if the transmitter still does not track the product surface correctly, it may be necessary to adjust the threshold values.

Rosemount Radar Master (RRM) has a plot function showing the reflections along the probe (see "Using the echo curve analyzer" on page 140).

If the amplitude threshold is too high, the product level will not be detected as illustrated in Figure 7-6. In a situation like this, the amplitude threshold has to be lowered so that the Surface peak is not filtered out.

Figure 7-6. surface threshold is too high.

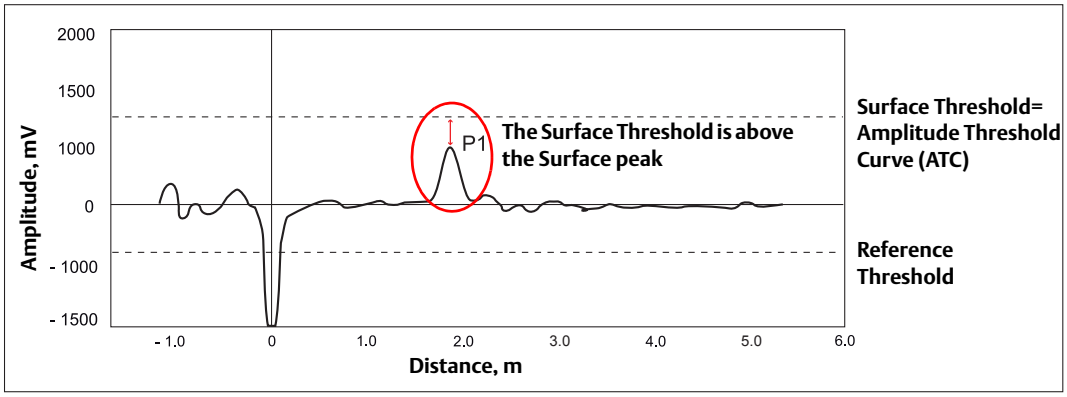

If there are disturbing objects in the tank, the threshold must be carefully set to avoid locking on the wrong amplitude peak. In Figure 7-7, the transmitter has locked on a peak above the actual product surface, i.e. a disturbance was interpreted as the product surface, whereas the actual product surface was interpreted as the interface or the probe end.

Figure 7-7. Surface threshold is too low

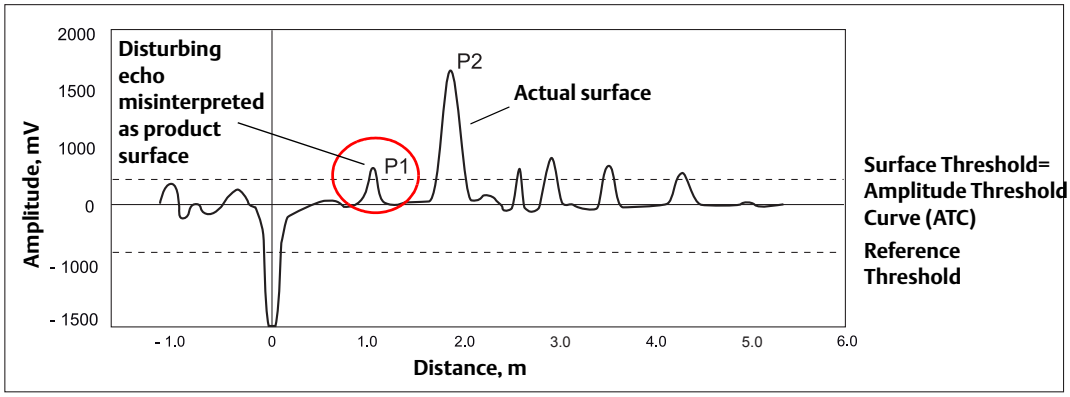

By adjusting the surface threshold the product surface is properly detected as illustrated in Figure 7-8.

Figure 7-8. Echo Curve after surface threshold was adjusted

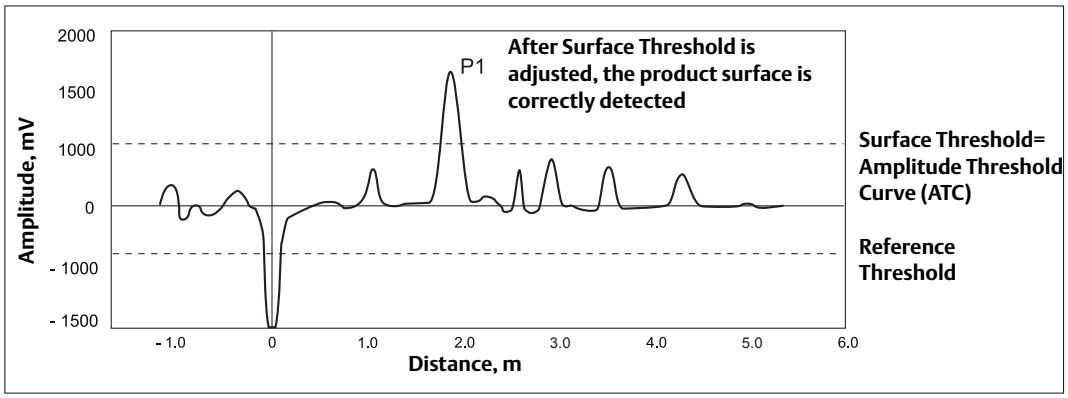

To adjust the amplitude thresholds, see "Using the echo curve analyzer" on page 140.

In the *Echo Curve Analyzer* in RRM, the amplitude thresholds can be easily dragged to the desired values.

7.5 Interface Peak not found

In interface applications where the bottom product has a relatively low dielectric constant (<40), or if the signal is attenuated in the upper product, the amplitude of the reflected signal is relatively low and difficult for the transmitter to detect. In such cases, it may be possible to detect the reflected signal if the corresponding amplitude threshold is adjusted.

The Rosemount Radar Master (RRM) lets you view a waveform plot to analyze the measurement signal. The plot shows the signal and the thresholds used for the different amplitude peaks. By adjusting the Interface Threshold, it is possible to detect even weak interface signals.

Guidelines for amplitude threshold settings:

- The Interface Threshold should be approximately 50% of the interface signal amplitude.
- If possible, the Interface Threshold should be higher than the Surface Threshold.

You can use the RRM software or a Field Communicator to change the amplitude thresholds. See "Using the echo curve analyzer" on page 140 for more information.

If the Lower Product Dielectric Constant is known, the corresponding configuration parameter can be changed as an alternative to adjusting the amplitude thresholds. See also "Dielectric Constant settings" on page 294.

Figure 7-9 illustrates a situation where the Interface Threshold is too high. The signal amplitude peak at the interface between the upper and lower products is not detected in this case.

Figure 7-9. Echo curve plot indicating that the amplitude threshold for the interface peak is too high

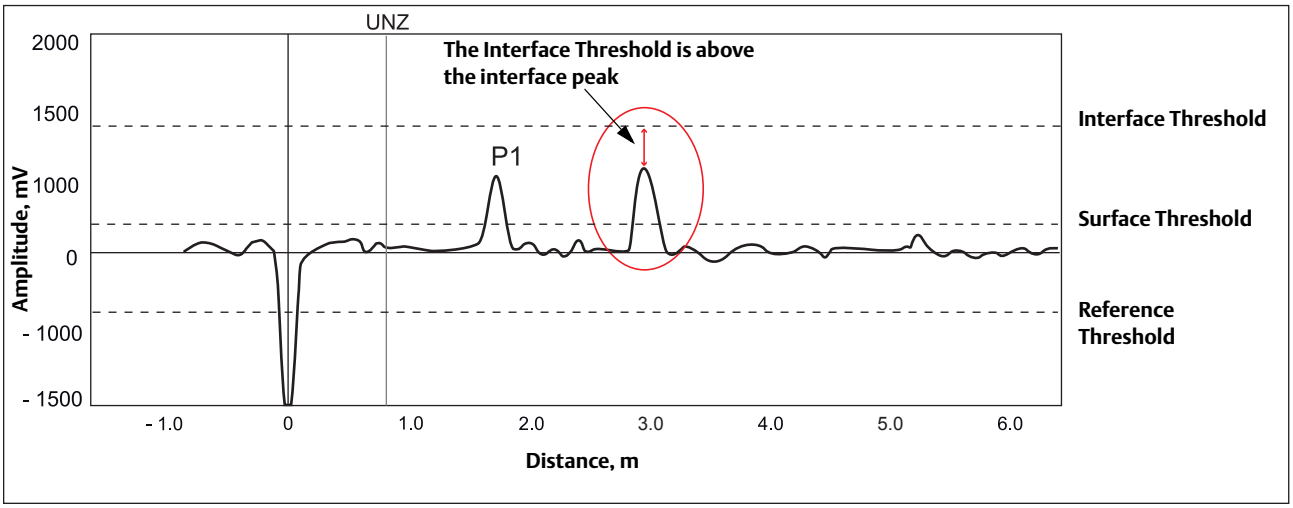

By adjusting the Interface Threshold, the peak at the interface between the upper and lower products is detected as illustrated in Figure 7-10:

Figure 7-10. After changing the amplitude threshold the transmitter detects the interface

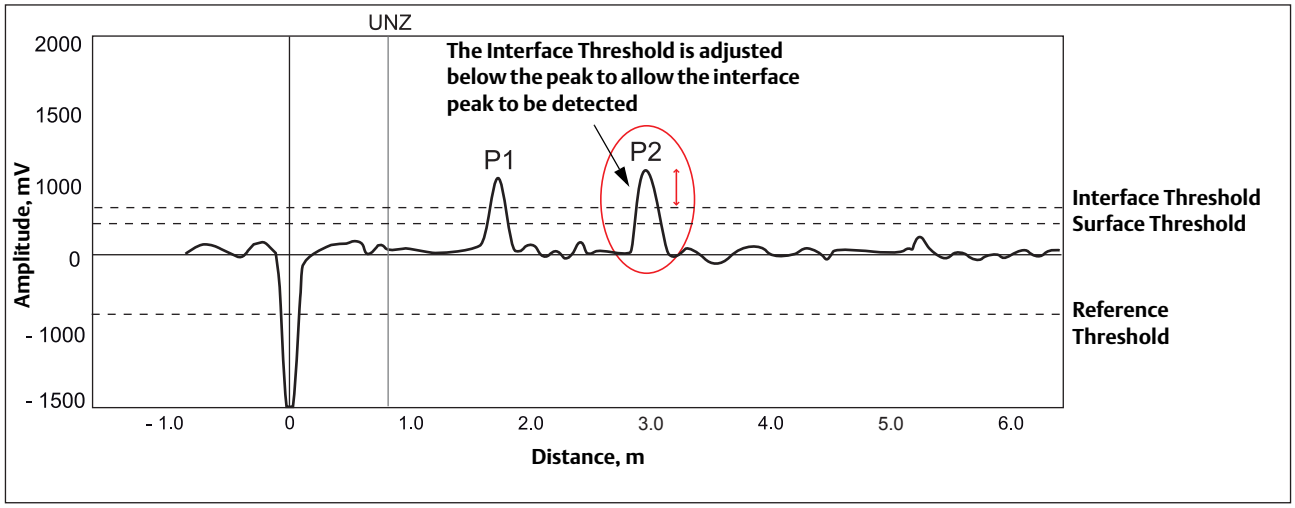

7.6 Disturbance echo handling

When the Basic Configuration is done, the transmitter may need a fine-tuning to handle disturbing objects in the tank. The Amplitude Threshold Curve (ATC) function can be used for disturbance echo handling with the Rosemount 5300 Series transmitter.

7.6.1 Amplitude threshold curve

As shown in Figure 7-11, the ATC can be designed to filter out single disturbing echoes by adapting the curve around the corresponding amplitude peak. It is important in this case that

the disturbance is fixed at a certain tank level. Disturbing echoes which may appear different from time to time can be filtered out by raising the whole ATC.

Figure 7-11. Disturbing echoes can be filtered out by creating an amplitude threshold

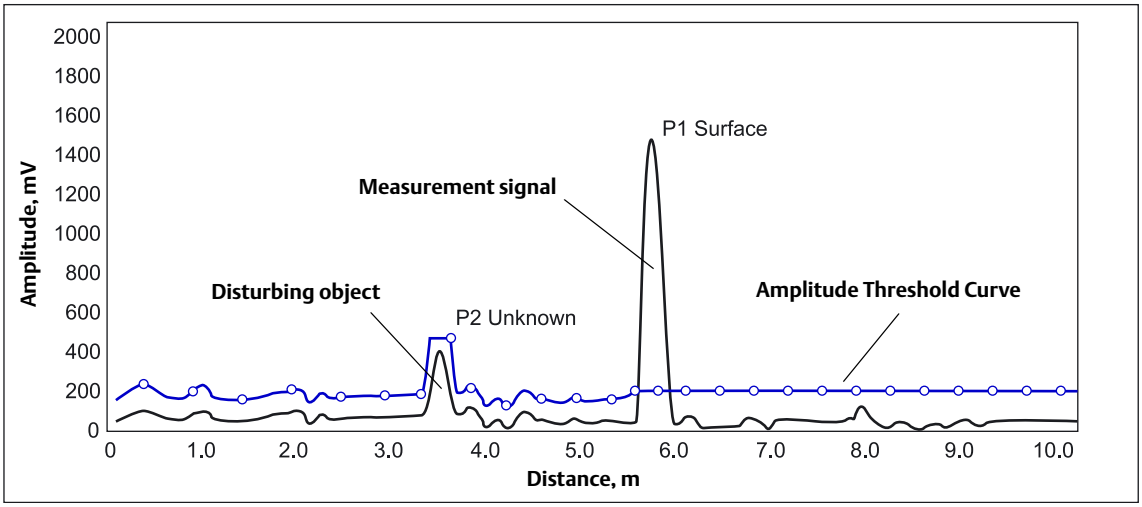

7.6.2 Disturbances at the top of the tank

In addition to using the ATC, the Rosemount 5300 transmitter supports alternative methods to filter out disturbances at the top of the tank, such as the Trim Near Zone and the Hold Off Distance/Upper Null Zone functions, which can be used to handle disturbances from narrow nozzles or nozzles with rough edges. See "Handling of disturbances from nozzle" on page 280 for more information.

7.6.3 Signal quality metrics

Build up on the probe and different surface conditions are factors that can affect signal and noise levels. Signal Quality Metrics can give an indication of how good the surface signal is compared to the noise. For more information, see Appendix C: Signal Quality Metrics.

7.7 Interface measurements with fully submerged probes

The Rosemount 5300 Series has a measurement option which makes it possible to handle interface measurements when the probe is fully submerged into the upper product, see Figure 7-12, and only the interface level is detected by the transmitter. Even if the upper product level drops, it is ignored by the transmitter which continues to measure only the interface level, but the measurement accuracy is reduced since the transmitter does not take into account the influence of the air gap above the product surface. To achieve high accuracy in this measurement mode, the probe must be fully submerged, or a 5302 for Level and Interface measurements should be used.

The Measurement Mode parameter is available via the HART command [2, 3, 3].

FOUNDATION fieldbus parameter: TRANSDUCER 1100 > MEAS_MODE

Choose the *Interface Level with Submerged Probe* option.

Measurement mode *Interface Level with Submerged Probe* can also be activated in the RRM software:

1. In the RRM workspace, click the **Tank** icon.
2. Select the **Environment** tab.
3. Select the Measurement Mode **Interface Level with Submerged Probe** option.
4. Click the **Store** button.

NOTE:
Do not use Measurement Mode *Interface Level with Submerged Probe* in applications when both Interface Level and Product Level are available.

Figure 7-12. Interface level measurements in a full chamber

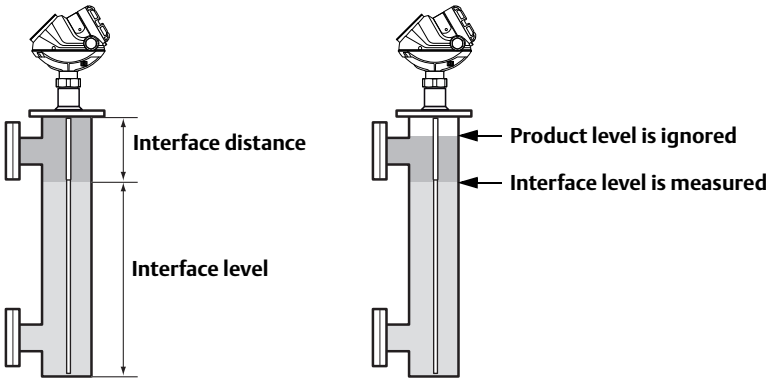

NOTE:
Adjust Surface Threshold if the interface level pulse is not detected. Note that in submerged mode the interface is picked up by the surface threshold. See also "Using the echo curve analyzer" on page 140.

7.8 Analog output calibration

This function lets you calibrate the analog output by comparing the actual output current with the nominal 4 mA and 20 mA currents. Calibration is done at the factory and normally the transmitter does not need to be recalibrated.

The analog output calibration function is available via the HART command [2, 8, 1].

In RRM, this function is available via **Setup** > **Output**.

To calibrate the analog output current:

1. Start RRM and make sure that the transmitter communicates with the PC (see Section 5: Configuration).
2. In the **Device Config/Setup** toolbar, click the **Output** icon.
3. Click the **Analog Out 1** tab.
4. Click the **Calibrate DAC** button.

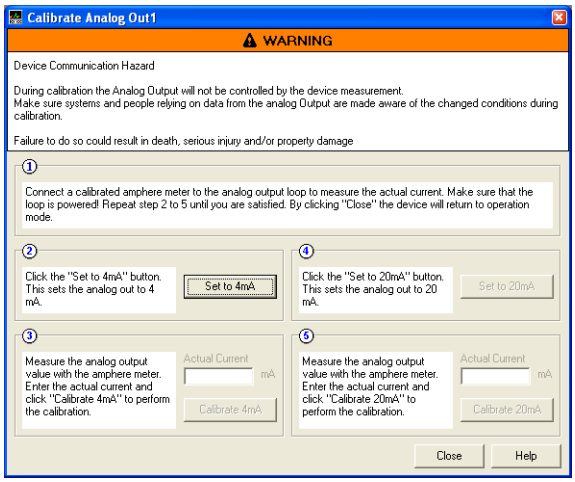

5. Follow the instructions to calibrate the 4 mA and the 20 mA outputs.

7.9 Level and distance calibration

Level and distance calibration may be necessary when using a nozzle or pipe or if there are disturbances in the near zone caused by a physical object.

Non-metallic (e.g. plastic) vessels and installation geometry may introduce an offset for the zero reference point. This offset may be up to ± 25 mm. The offset can be compensated for using Distance Calibration.

When calibrating the transmitter, it is important that the product surface is calm and that the tank is not being filled or emptied.

A complete calibration is performed in two steps:

1. Calibrate the Distance measurement by adjusting the Calibration Distance parameter.
2. Calibrate the Level measurement by adjusting the Tank Height.

Distance calibration

1. Measure the actual distance between the Upper Reference Point and the product surface.
2. Adjust the **Calibration Distance** so that the Distance measured by the transmitter corresponds to the actual distance.
   The Calibration Distance parameter is available via
   HART command [2, 3, 2, 4, 1],
   or
   RRM:
   a. Click the **Tank** icon under Device Config/Setup in the RRM workspace.
   b. In the **Tank** window, select the **Geometry** tab.
   c. Click the **Advanced** button.
   d. Enter the desired value in the **Calibration Distance** field and click the Store button.

Level calibration

1. Measure the actual Product Level.
2. Adjust the **Tank Height** so the product level measured by the transmitter corresponds to the actual product level.

Figure 7-13. Distance and level calibration

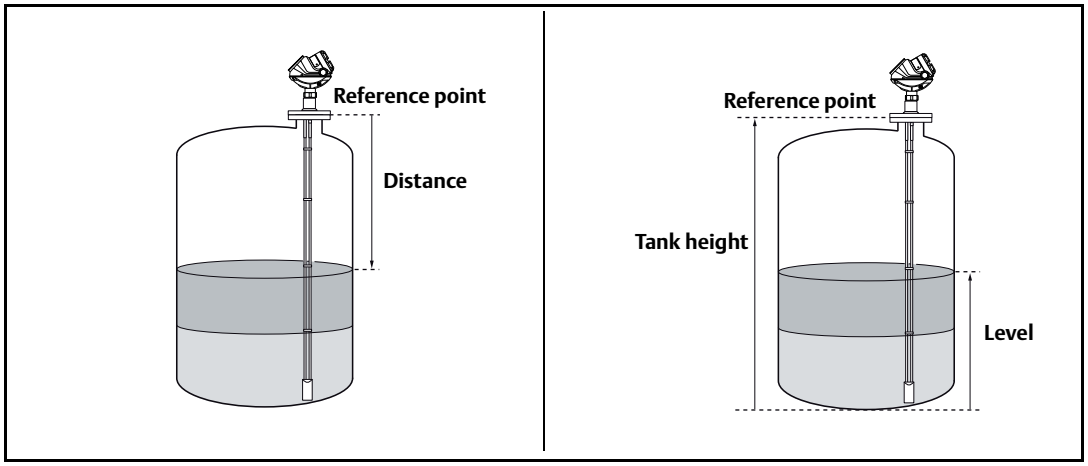

7.10 Logging measurement data

By using the Log Device Registers function in the RRM software, you can log Input and Holding registers over time. It is possible to choose from different pre-defined sets of registers. This function is useful for verifying that the transmitter works properly.

To log device registers, choose the **Tools > Log Device Registers** option to open the *Log Registers* window:

Figure 7-14. The Log Registers function can be used to verify that the transmitter works properly

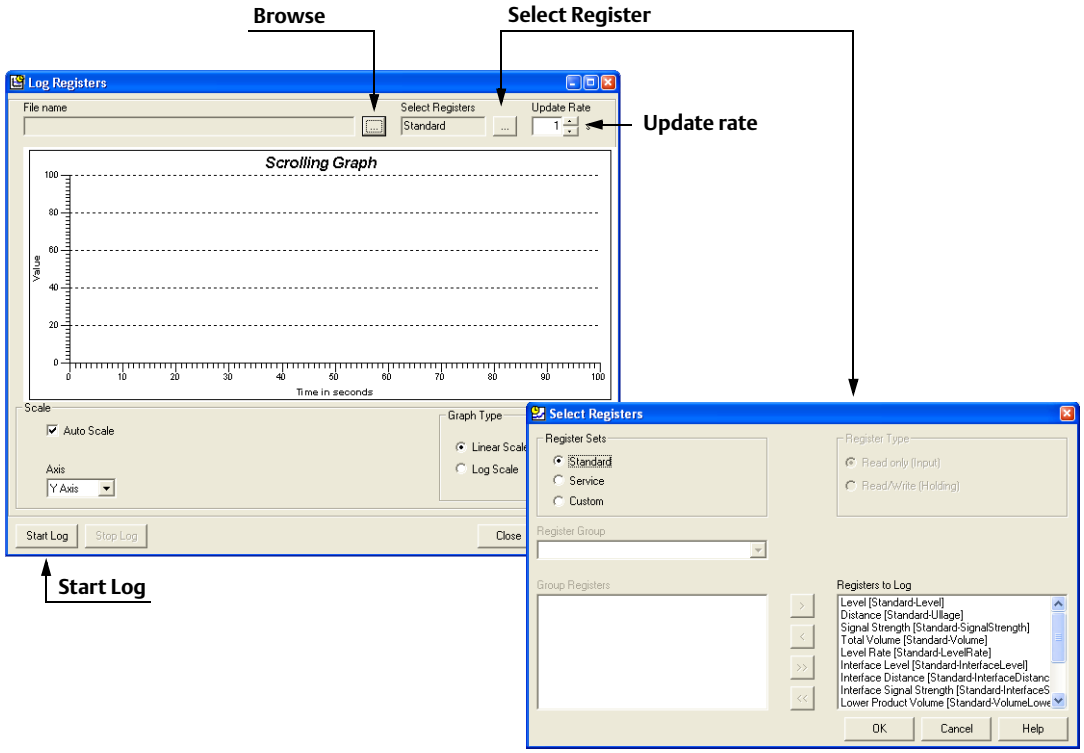

To start logging:

1. Click the **Browse** button, select a directory to store the log file, and type a log file title.
2. Click the **Select Register** button and choose register type to be logged.
3. Select the desired registers to be logged. There are three options available: Standard, Service, and Custom. Standard and Service refer to pre-defined sets of registers. The Custom option lets you choose the desired range of registers.
4. Enter the update rate. An update rate of for example 10 seconds means that the plot will be updated every 10 seconds.
5. Click the **Start Log** button. The logging will proceed until stopped by clicking the **Stop Log** button.

7.11 Backing up the transmitter configuration

Use this RRM option to make a backup copy of the configuration parameters in the transmitter database. The backup file can be used to restore the transmitter configuration. It can also be used for configuration of a transmitter in a similar application. Parameters in the saved file can be uploaded directly to the new device.

The backup function is available from the *Device* menu in RRM:

1. Select **Device** > **Backup Config to File**.

2. Browse to the desired directory:

Figure 7-15. It is recommended that the transmitter configuration is stored in a backup file

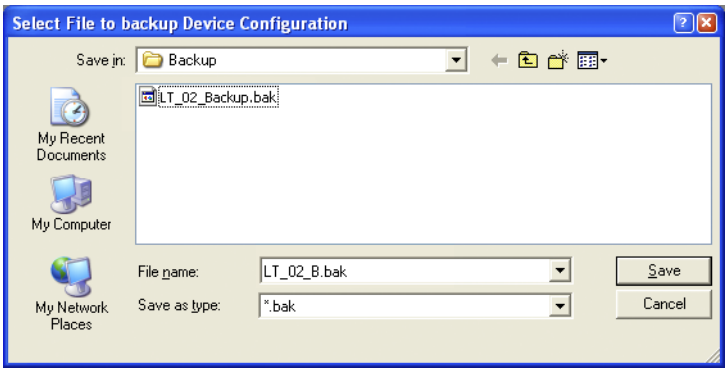

3. Type a name of the backup file and click the **Save** button.
Now the transmitter configuration is stored. The backup file can be used at a later stage to restore a configuration which has been accidentally changed. The backup file can also be used to quickly configure transmitters which are installed on similar tanks.To upload a backup configuration, choose the **Upload Config to Device** option from the **Device** menu.

   The backup file can be viewed by using the Backup File Reader which is installed with the RRM software:



4. The backup file can also be viewed as a text file in a word processing program such as the Notepad:

Figure 7-16. The configuration backup file can be viewed in a word processor program

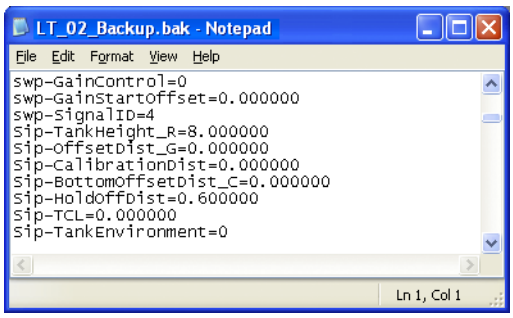

See also "Configuration report" on page 156 for further information on viewing backup files.

7.12 Configuration report

This function in RRM shows what configuration changes have been done to the transmitter compared to the factory configuration. The report compares a specified backup file with the default transmitter configuration.

To open the Configuration Report, choose the **Tools > Configuration Report** menu option:

Figure 7-17. The Configuration Report window in RRM

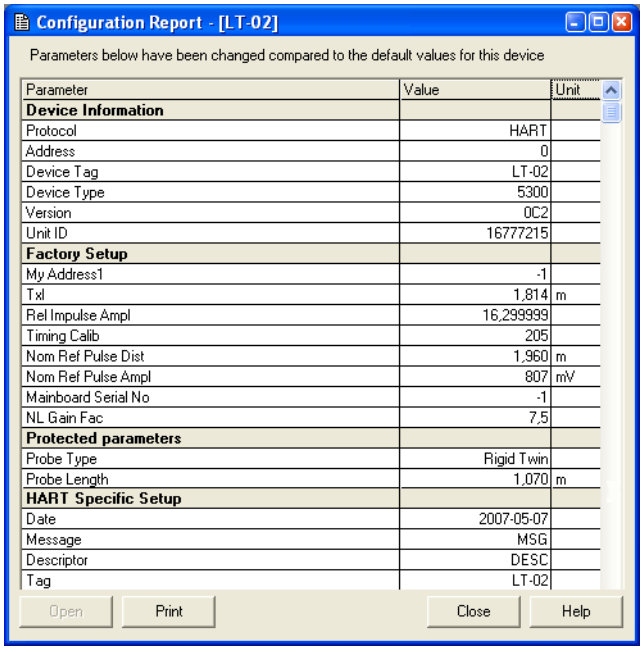

Information on probe type, software versions, software and hardware configuration, and unit code is presented.

7.13 Reset to factory settings

This function resets all or a specific part of the holding registers to factory settings.

NOTE:
It is recommended that a backup of the configuration is done before the factory reset. Then the old transmitter configuration can be loaded if necessary.

RRM: choose menu option **Tools** > **Factory Settings**:

Figure 7-18. The Reset to Factory Settings window in RRM

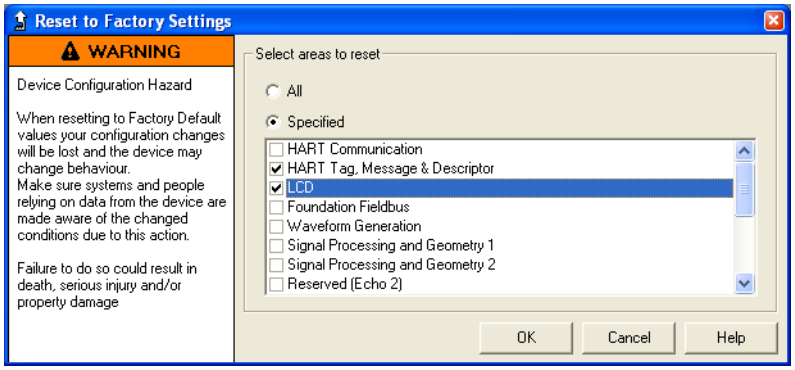

AMS Suite: **Tools/Service** > **Factory Settings**.

HART Command: [3, 2, 1, 2].

DeltaV:

1. In the DeltaV Explorer, select the desired transmitter icon, and click the right mouse button on the Transducer 1100 block icon:

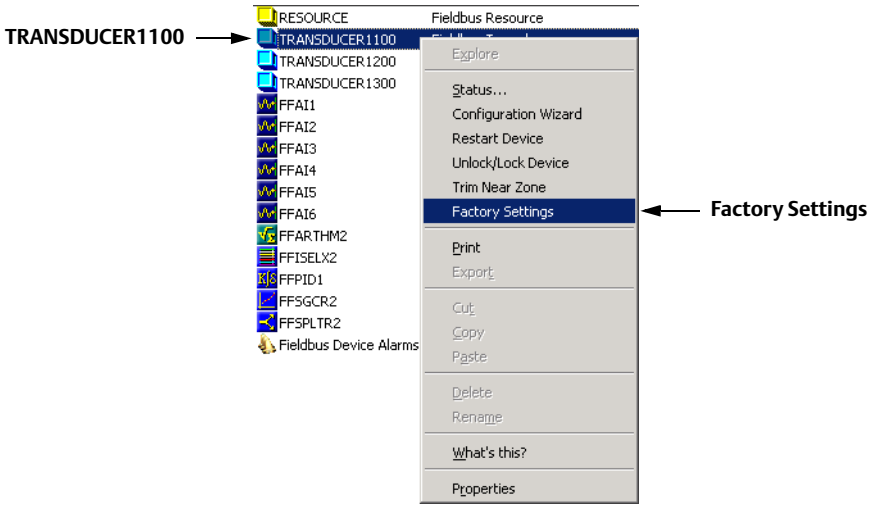

2. Choose the **Factory Settings** option.

7.14 Diagnostics

The following information about the device can be retrieved:

- device status, see “Device Status” on page 172.
- device errors, see “Errors” on page 173.
- device warnings, see “Warnings” on page 174.
- measurement status, see “Measurement Status” on page 175.
- volume status, see “Volume Calculation Status” on page 178.
- analog output status, see “Analog output status” on page 179.

Rosemount Radar Master

To open the *Diagnostics* window in RRM, choose the **Diagnostics** option from the **Tools** menu:

Figure 7-19. The Diagnostics window in RRM.

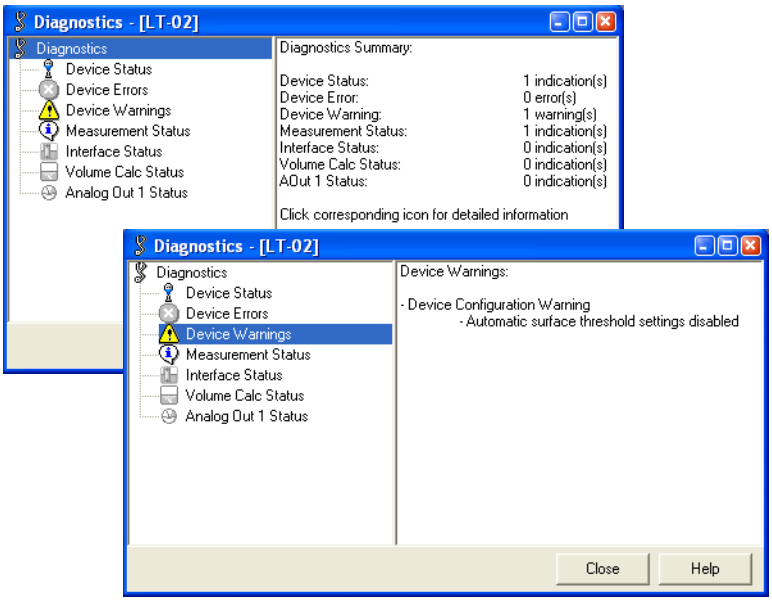

AMS Suite

To view the Diagnostics window in AMS Suite, click the right mouse button on the desired transmitter, and choose the **Device Diagnostics** option:

Figure 7-20. Device Diagnostics window in AMS Suite

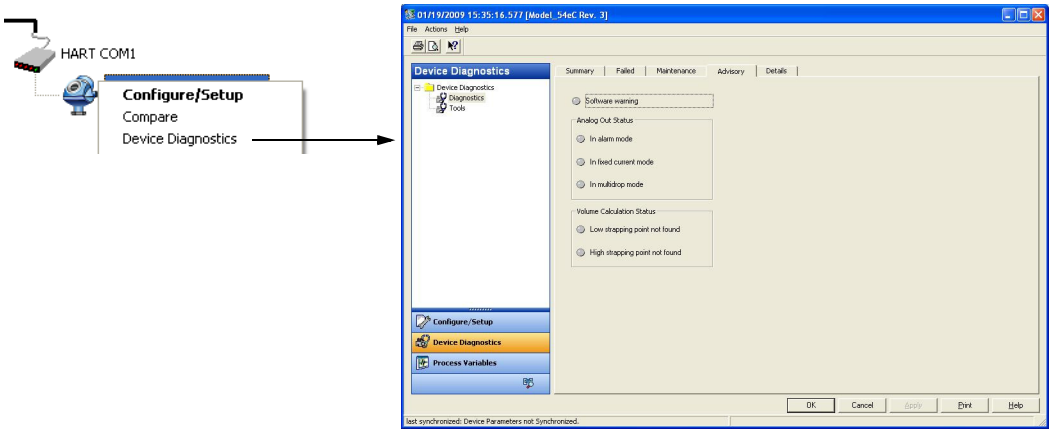

DeltaV Explorer

1. In the DeltaV Explorer, select the desired transmitter icon, and click the right mouse button on the **Transducer 1100** block icon:

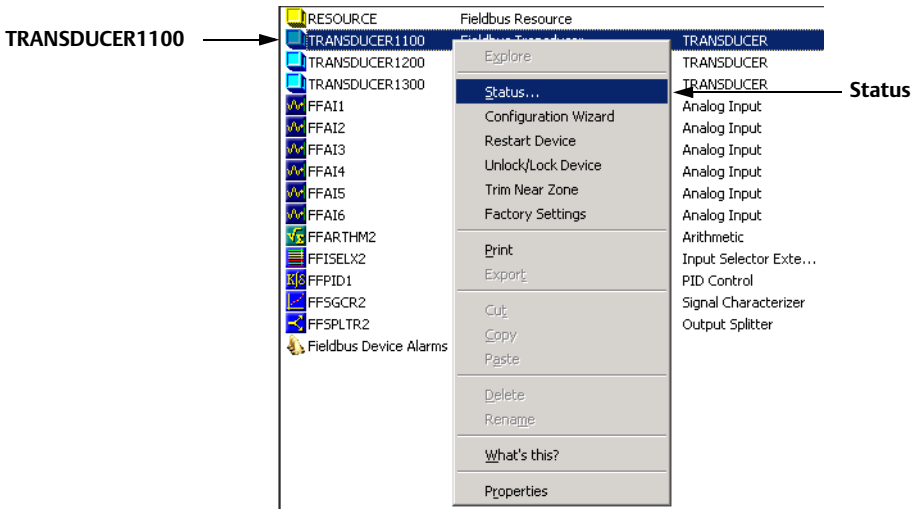

2. Choose the **Status** option.

3. Select the **Device Status** tab for information on measurement status. Select the **Errors/Warnings** tab for information on errors and warnings.

Figure 7-21. The Status window in DeltaV shows various status information

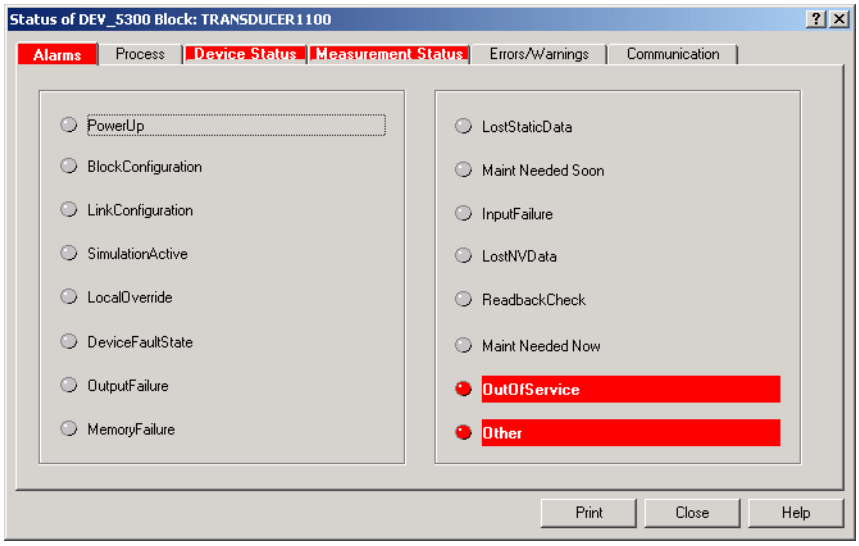

HART command

For a Field Communicator, the corresponding HART command for the Diagnostics option is [3, 1].

7.15 Using the Simulation Mode

This function can be used to simulate measurements and alarms.

RRM: choose menu option **Tools > Simulation Mode**:

Figure 7-22. The Simulation Mode window in RRM

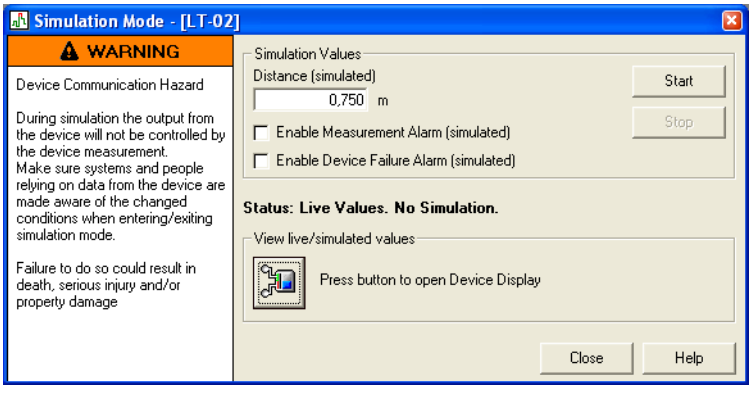

AMS Suite: **Tools** > **Service** > **Simulation Mode**.

HART Command: [3, 2, 1, 3].

DeltaV:

1. In the DeltaV Explorer, select the desired transmitter icon, and click the right mouse button on the Transducer 1300 block icon:

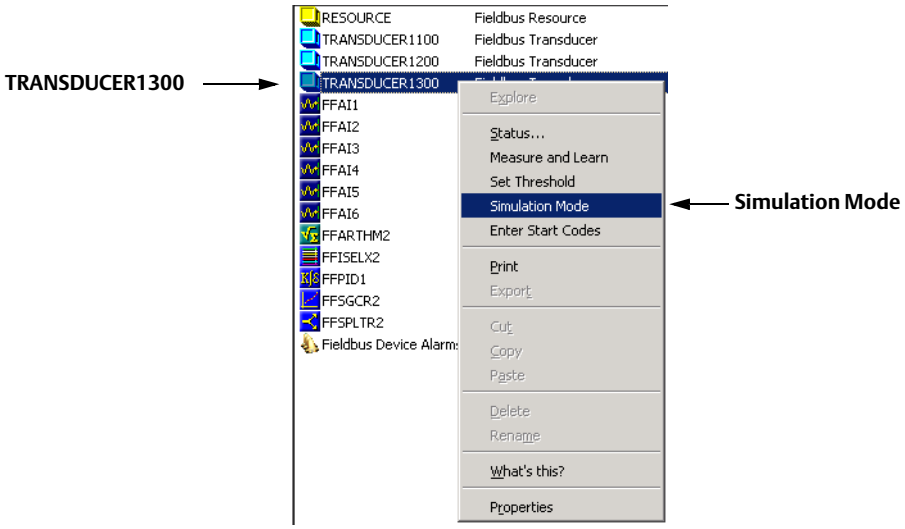

2. Choose the **Simulation Mode** option.

7.16 Write protecting a transmitter

A Rosemount 5300 Series transmitter can be protected from unintentional configuration changes by a password protected function. The default password is 12345. It is recommended that this password is not changed to facilitate service and maintenance of the transmitter.

RRM: **Tools** > **Lock/Unlock Configuration Area**.

AMS Suite: **Tools** > **Service** > **Lock/Unlock Device**.

HART Command: [3, 2, 1, 2].

DeltaV:

1. In the DeltaV Explorer, select the transmitter icon, and click the right mouse button on the Transducer 1100 block icon.

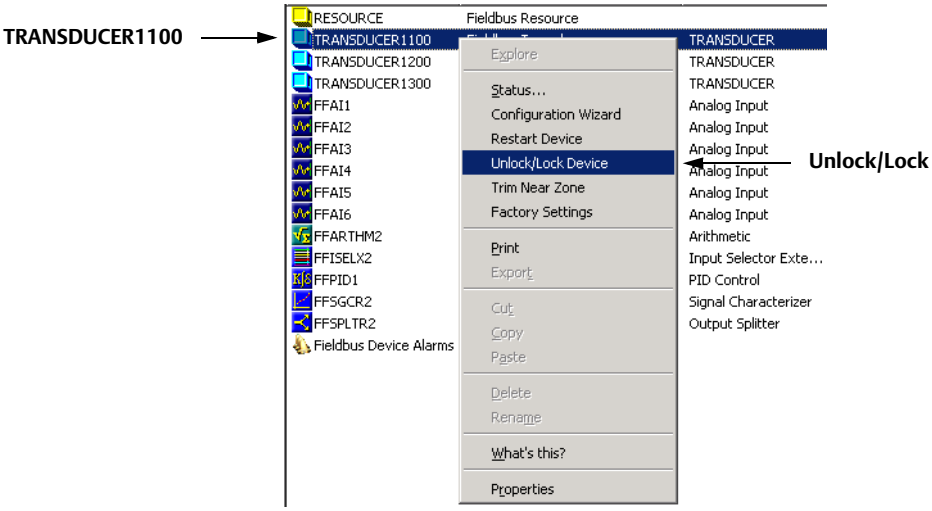

2. Choose the **Unlock/Lock Device** option.

7.17 Enter Service Mode in RRM

In RRM, service functions for advanced users are available for the Rosemount 5300 Series transmitter. Setting RRM into Service Mode, all the Service menu options in RRM are enabled. The default password for enabling the Service Mode is “admin”. The password can be changed by selecting the **Change Password** option from the **Service** menu.

7.18 Viewing Input and Holding Registers

Measured data is continuously stored in the **Input Registers**. Viewing the contents of the Input Registers, advanced users can check that the transmitter works properly.

The **Holding Registers** store various transmitter parameters, such as configuration data, used to control the measurement performance.

Using RRM, most Holding Registers can be edited by simply typing a new value in the appropriate Value input field. Some Holding Registers can be edited in a separate window. In this case, you can change individual data bits.

To be able to view the Input/Holding registers in RRM, the Service Mode must be activated:

1. Choose the **Enter Service Mode** option from the **Service** menu.
2. Type the password (default password is “admin”). Now the View Input and View Holding Registers options are available.
3. Choose the **View Input/Holding Registers** option from the **Service** menu.
4. Click the **Read** button. To change a Holding register value, just type a new value in the corresponding Value field. The new value is not stored until the **Store** button is clicked.

Figure 7-23. Holding and Input Registers can be viewed in RRM

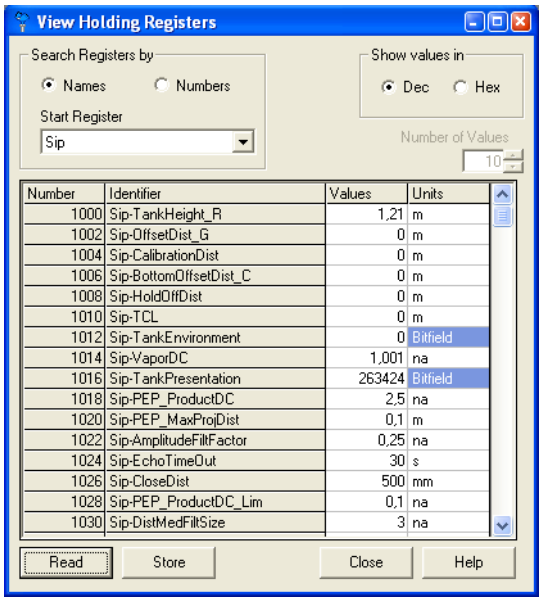

7.19 Removing the transmitter head

FLANGE VERSION

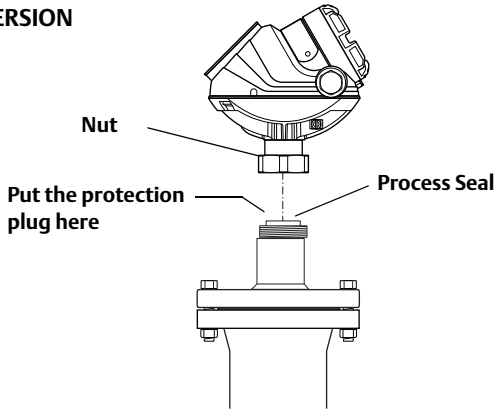

1. Loosen the nut that connects the transmitter housing to the Process Seal.
2. ⚠ Carefully lift the transmitter head.
3. Make sure the upper surface of the Process Seal is clean and the spring-loaded pin at the center of the Process Seal is properly inserted (the pin should move back when pushed into the hole).
4. Attach the protection plug to the Process Seal.

THREADED VERSION

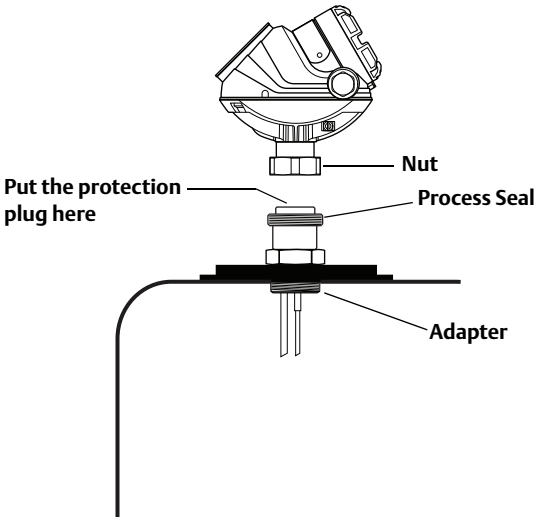

NOTE:
Do not remove the Process Seal from the adapter!

7.20 Changing a probe

7.20.1 Probe and firmware compatibility

Transmitter heads with a firmware version earlier than 1.A4 (manufacturing date before 2008-06-18) are not compatible with HP/HTHP/C probes marked with R2.

Transmitter heads with a firmware version 1.A4 or later are compatible with HP/HTHP probes without the R2 marking when the Trim Near Zone function is performed, as illustrated below.

Only probes with both R3 and VC marking are compatible with the Dynamic Vapor Compensation function. See Appendix C: Advanced configuration to determine if the Dynamic Vapor Compensation function is supported by the transmitter head.

Table 7-1. Compatibility between firmware version and probe type

Firmware Version	Probe Type			
	Standard 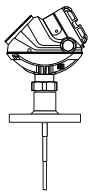	HP / HTHP without R2 marking 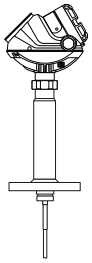	HP / HTHP / C with R2 marking only(1) 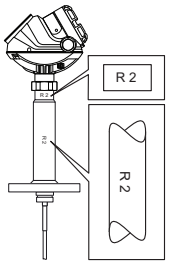	HTHP with both R3 and VC marking 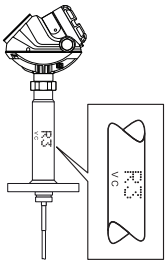
Firmware version earlier than 1.A4	Yes	Yes	No	No
Firmware version 1.A4	Yes	Yes(2)	Yes	No
Firmware version 2.A2 to 2.F0	Yes	Yes(2)	Yes(3)	No
Firmware version 2.H0 or later	Yes	Yes(2)	Yes(3)	Yes(4)

(1) The R2 marking is on the housing seal or the adapter as seen in the figure.
(2) Trim Near Zone function is required.
(3) When Dynamic Vapor Compensation is not used.
(4) The probe requires that Dynamic Vapor Compensation is activated in the device for full functionality.

7.20.2 Check firmware and probe version

1. Check the manufacturing date on the transmitter head label.

Manufacturing Date Before 080618 (YYMMDD)

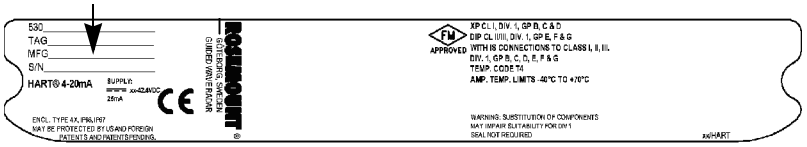

2. Check the marking on the probe.

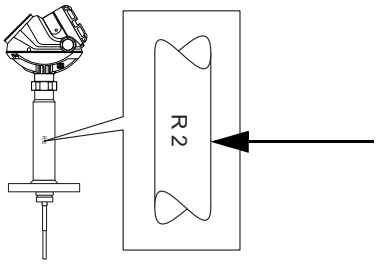

Example: R2 Marking on the probe

NOTE:
In RRM, the software revision number (firmware version) can be checked either in Device Explorer, or at the bottom of the RRM window, as shown in Figure 7-24.

Figure 7-24. software revision number

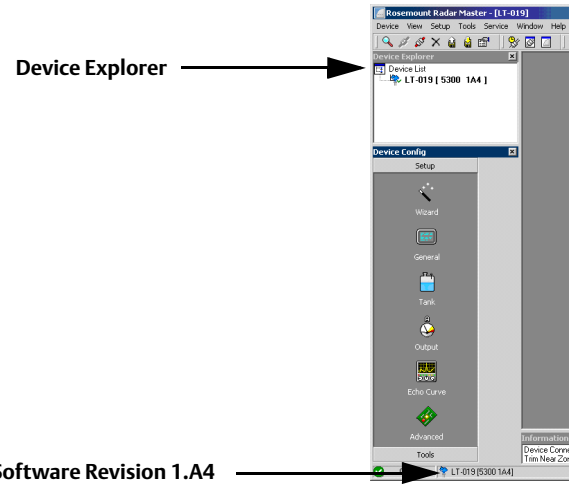

7.20.3 Changing the probe

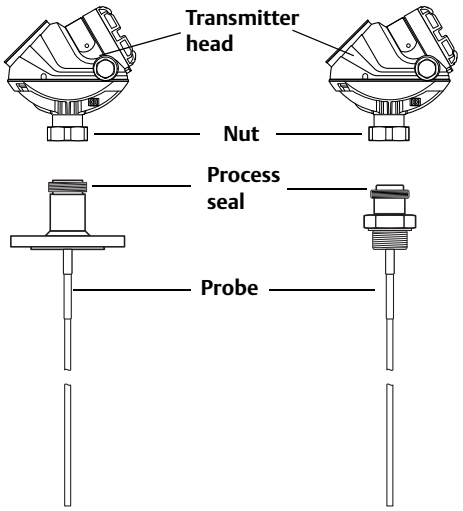

1. Loosen the nut.

⚠ 2. Remove the transmitter head from the old probe.

3. On the new probe, make sure that the protection plug is removed and the upper surface of the Process Seal is clean. Also make sure that the spring-loaded pin at the center of the Process Seal is properly inserted.

4. Mount the transmitter head on the new probe.

5. Tighten the nut. Max torque is 30 Lbft (40 Nm).

6. If the new probe is not of the same type as the old one, update the transmitter configuration by setting the Probe Type parameter to the appropriate value:
HART Fast Key sequence [2, 1, 2]
or
in RRM, click the **Tank** icon in the **Device Config/Setup** toolbar.

7. Measure the Probe length and enter the measured value:
HART Fast Key sequence [2, 1, 2],
or
in RRM, click the **Tank** icon in the **Device Config/Setup** toolbar, and select the **Probe** tab in the **Tank** window.

8. In certain cases, a fine tune by using the Trim Near Zone function is necessary.
In RRM, select **Guided Setup** > **Device specific setup** to find out if it is needed.
For a Field Communicator, use HART Fast Key Sequence [2, 1, 7, 2].
When using the Trim Near Zone function, product level in the vessel must be lowered beneath the Near Zone to get precise measurement data (see Figure 7-25).

Figure 7-25. Product level lowered beneath the Near Zone

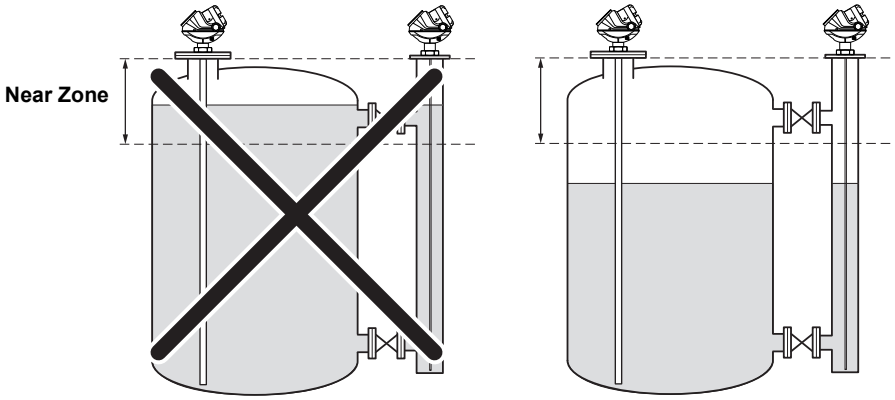

Table 7-2. Near Zone definitions depending on software releases and probe type

5300 GWR Series Near Zone		
Firmware Version	**Rigid Probes**	**Flexible Probes**
Firmware version earlier than 1.A4	15 in. (0.37 m)	
Firmware version 1.A4 or later	40 in. (1 m)	

9. Verify that the transmitter measures correct product level, otherwise see "Level and distance calibration" on page 152.

7.21 Troubleshooting guide

If there is a malfunction despite the absence of diagnostic messages, see Table 7-3 for information on possible causes.

Table 7-3. Troubleshooting chart

Symptom	Possible cause	Action
No level reading	• Power disconnected • Data communication cables disconnected • Probe is not connected	• Check the power supply • Check the cables for serial data communication • View the Diagnostic window, see "Diagnostics" on page 158 in order to check active status messages • Check if "Probe Missing" is active. If it is, check the probe connection
No HART communication.	• COM Port configuration does not match the connected COM Port • Cables may be disconnected • Wrong HART address is used • Hardware failure • HART resistor	• Check that correct COM Port is selected in the HART server (see "Specifying the COM port" on page 86) • Check wiring diagram • Verify that the 250 Ω resistor is in the loop. • Check cables • Make sure that correct HART short address is used. Try address=0 • Check Analog Output current value to verify that transmitter hardware works • Check that the correct settings are used in RRM. Select Device, Search from the menu. Click Settings and HART tab. Make sure the values are properly chosen. The standard values are shown on page 81.
Analog Out is set in Alarm.	Measurement or transmitter failure.	View the Diagnostic window, see "Diagnostics" on page 158 to check active error and status messages.
Both Surface pulse and Interface Pulse are detected, but Interface Level is reported as unknown in the Echo Curve plot.	Measurement Mode is set to "Level Only".	Set Measurement Mode to "Level and Interface" (see "Basic configuration parameters" on page 74).
Both Surface pulse and Interface pulse are detected, but Interface Level is reported as unknown in the Echo Curve plot.	• Interface pulse is identified as a double bounce • Surface pulse and Interface pulse are very close	No action required. Use the Echo Curve plot to verify that the surface and interface are close, see "Analyzing the measurement signal" on page 139.

Symptom	Possible cause	Action
Surface pulse is detected, but Level is incorrectly reported as Full or Empty.	• Wrong Probe Type set • Bad Reference Threshold value	View the Diagnostics window, see "Diagnostics" on page 158, to check active messages and check if the warning "Full Tank/Empty Tank" is active. If this is the case, check that: • the transmitter is configured with correct probe type • the reference pulse is below the reference amplitude threshold. If not, adjust reference threshold to an appropriate value
The reference pulse is not detected.	• The tank is full • The transmitter is configured with wrong probe type • Reference Amplitude Threshold is incorrect	• Check the product level • Check that correct probe type is configured • Check Reference Amplitude Threshold
Incorrect Interface Level reading.	• Interface threshold incorrect • Upper Product Dielectric constant incorrect	• Adjust Interface threshold, see "Interface Peak not found" on page 148 • Check the Upper Product Dielectric constant, see "Basic configuration parameters" on page 74
Incorrect level reading.	• Configuration error • Disturbing objects in the tank	• Check the Tank Height parameter • Check status information and diagnostic information • Check that the transmitter has not locked on an interfering object, see "Disturbance echo handling" on page 149 • Adjust the Surface amplitude threshold, see "Product Surface Peak not found" on page 147
Integral display does not work.		• Check the display configuration • Check loop power • Check Display connection • Contact Emerson Process Management Service Department(1)
FOUNDATION fieldbus Card to Transmitter Communication Fault		• Verify Device Mode setting, should be FOUNDATION fieldbus (Parameter: ENV_DEVICE_MODE) • Restart method from Resource Block • Reboot gauge (Cycle Power)
Level Measurement Failure		• Check Power Supply • Check the gauge configuration (Transducer Block) • Check that the mechanical installation is correct
Temperature Measurement Failure		• Check ambient temperature(2) • Restart gauge • Contact Emerson Process Management Service Department

Symptom	Possible cause	Action
Volume Measurement Failure		• Restart gauge • Check gauge configuration using PC Based configuration tool
No surface echo		• Check signal strength • Restart transmitter • See "Product Surface Peak not found" on page 147
DB Error/ Microwave Unit Error/ Configuration Error/ Other Error		• Restart transmitter • Set database to default; load default Database • Download Application Software • Call Service Center
SW Error/ Display Error/ Analog Out Error		• Restart transmitter • Call Service Center

(1) A malfunctioning display panel may only be replaced by service personnel at the Emerson Process Management Service Department. A display must not be replaced when the transmitter is in operation.
(2) If the 5300 transmitter has been exposed to temperatures outside the specified limits, the device may stop its normal operation.

7.22 Diagnostic Messages

7.22.1 Device Status

Device Status messages that may appear on the Integral Display, on the Field Communicator, or in RMM are shown in Table 7-4:

Table 7-4. Device status

Message	Description	Action
Running Boot Software	The application software could not be started.	Contact Emerson Process Management Service Department.
Device Warning	A device warning is active.	See Warning Messages for details.
Device Error	A device error is active.	See Error Messages for details.
Sim Mode 0 Active	The simulation mode is active.	Turn off the simulation mode in RRM, select Tools, Simulation Mode, and click the Stop button.
Advanced Simulation Mode Active	The advanced simulation mode is active.	To turn off the Advanced Simulation mode, set Holding Register 3600=0 (see "Viewing Input and Holding Registers" on page 162).
Interface Invalid	The interface measurement is invalid.	Check the Error Messages, Warning Messages, and the Interface Status for details.
Invalid Measurement	The level measurement is invalid.	Check Error Messages, Warning Messages, and Measurement Status for details.
User Register Area Write Protected	The configuration registers are write protected.	Use the Lock/Unlock function to turn off the write protection (see "Write protecting a transmitter" on page 162).
Write Protected Jumper Set	Write protection jumper on the display is enabled.	Remove the write protection jumper.
Factory Settings Used	The factory default configuration is used.	The transmitter has lost its calibration. Contact Emerson Process Management Service Department.
Probe missing	Probe is not detected.	Check that the probe is correctly mounted. Check the connection between probe and transmitter head.

7.22.2 Errors

Error messages that may be displayed on the Integral Display, on a Field Communicator, in AMS, or in RRM are shown in Table 7-5. Errors normally result in Analog Output alarm.

Errors are indicated in RRM in the *Diagnostics* window.

Table 7-5. Error messages

Message	Description	Action
RAM error	An error in the gauge data memory (RAM) has been detected during the startup tests. Note: this automatically resets the gauge.	Contact Emerson Process Management Service Department.
FPROM error	An error in the gauge program memory (FPROM) has been detected during the startup tests. Note: this automatically resets the gauge.	Contact Emerson Process Management Service Department.
Database (Hreg) error	An error in the transmitter configuration memory (EEPROM) has been detected. The error is either a checksum error that can be solved by loading the default database or a hardware error. NOTE: the default values are used until the problem is solved.	Load default database and restart the transmitter. Contact Emerson Process Management Service Department if the problem persists.
Microwave Module error	An error in the microwave module.	Contact Emerson Process Management Service Department.
LCD error	An error in the LCD is detected.	Contact Emerson Process Management Service Department.
Modem error	An error in the modem used for digital communication has been detected.	Contact Emerson Process Management Service Department.
Analog out error	An error in the Analog Out Module.	Contact Emerson Process Management Service Department.
Internal temperature error	An error in the internal temperature measurement. -40 ºC<Internal Temperature<85 ºC.	Contact Emerson Process Management Service Department.
Other hardware error	An unspecified hardware error has been detected.	Contact Emerson Process Management Service Department.
Measurement error	A serious measurement error has been detected.	Contact Emerson Process Management Service Department.
Configuration error	At least one configuration parameter is outside allowed range. NOTE: the default values are used until the problem is solved.	• Load the default database and restart the transmitter (see "Reset to factory settings" on page 157) • Configure the transmitter or upload a backup configuration file (see "Backing up the transmitter configuration" on page 155) • Contact Emerson Process Management Service Department if the problem persists
Software error	An error has been detected in the transmitter software.	Contact Emerson Process Management Service Department.

7.22.3 Warnings

Table 7-6 shows a list of diagnostic messages that may be displayed on the Integral Display, on the Field Communicator, or in RRM. Warnings are less serious than errors and in most cases do not result in Analog Output alarms.

In RRM, warnings are indicated in the *Diagnostics* window.

Table 7-6. Warning messages

Message	Description	Action
RAM warning	See Diagnostics (RRM: Tools>Diagnostics) for further information on a warning message. See also "Diagnostics" on page 158.	
FPROM warning		
Hreg warning		
MWM warning		
LCD warning		
Modem warning		
Analog out warning		
Internal temperature warning		
Other hardware warning		
Measurement warning		
Config warning		
SW warning		

7.22.4 Measurement Status

Measurement Status messages that may appear on the Integral Display, on the Field Communicator, in DeltaV, or in RRM are shown in Table 7-7:

Table 7-7. Measurement status

Message	Description	Action
Full tank	The level measurement is in Full Tank state. The transmitter waits for the surface echo to be detected at the top of the tank.	No action needed.
Empty tank	The level measurement is in Empty Tank state. The transmitter waits for the surface echo to be detected at the bottom of the tank.	No action needed.
Probe missing	Probe is not detected.	Check that the probe is correctly mounted. Check the connection between probe and transmitter head.
Seal contaminated	Suspected contamination of the seal has been detected.	Check if the seal connection with the probe is contaminated.
Reference pulse calculated	The position of the reference pulse is calculated from the internal reference pulse.	No action needed.
Reference pulse invalid	An error in the reference pulse in the last sampled tank signal.	Check Warning messages. If MicroWave Module (MWM) Warning is active, this might indicate a transmitter error. Contact Emerson Process Management Service Department.
DeltaF not at setpoint	The DeltaF is not correctly regulated.	Check Warning Messages. If MicroWave Module (MWM) Warning is active, this might indicate a transmitter error. Contact Emerson Process Management Service Department.
Tank signal clip warning	The last Tank Signal was clipped.	Check Warning Messages. If MWM Warning is active, this might indicate a transmitter error. Contact Emerson Process Management Service Department.
No surface echo found	The Surface Echo Pulse cannot be detected. Possible cause: • Wrong surface threshold • Liquid level in Blind Zone or below probe end	Check if the configuration can be changed so that the surface echo can be tracked in this current region. View the Echo Curve plot and check surface threshold.
Predicted level	The presented level is predicted. The surface echo could not be detected.	Check if the configuration can be changed so that the surface echo can be tracked in this current region. View the Echo Curve plot and check surface threshold.

Message	Description	Action
No reference echo	The Reference Echo Pulse cannot be detected. Possible cause: • The tank is full. • The transmitter is configured with wrong probe type. • Reference Amplitude Threshold is incorrect.	• Check the product level. • Check that correct probe type is configured. • Check Reference Amplitude Threshold.
Reduced reference echo	The reference echo has been found with reduced amplitude.	No action needed.
In full tank state	The level measurement is in the full tank state, waiting for a surface echo detection at the top of the tank.	No action needed.
Sampling failed	The sampling of the last tank signal failed.	Check Warning Messages.
Invalid volume value	The given volume value is invalid. The given measurements are simulated.	Check Volume Status for details.
Sim mode 0 active	The simulation mode is active. The given measurements are simulated.	Turn off the simulation mode.
Advanced Simulation Mode active	The advanced simulation mode is active.	To turn off the Advanced Simulation mode, set Holding Register 3600=0 (see "Viewing Input and Holding Registers" on page 162).
Invalid Lower Volume Value	The given lower volume value is invalid.	Check Lower Volume Status for details.
Invalid Upper Volume Value	The given upper volume value is invalid.	Check Upper Volume Status for details.
Using probe end projection measurement	The probe end projection is active in the transmitter software.	No action needed.
Reference echo present	An echo has been detected in the reference zone.	No action needed.
Sudden level jump detected	This may result from various measurement problems, such as: 1. Rapid level changes 2. Surface level within Blind Zone 3. Disturbing echo	Check the tank to find out what causes problem to track the surface. 1. Set the Rapid Level Changes parameter, see "Tank environment" on page 76. 2. In the Blind Zones, the level may jump to Full Tank/End of Probe 3. See "Disturbance echo handling" on page 149.
Nearzone echo present	An echo has been detected in the nearzone.	No action needed.
Nonlinear gain used	The nonlinear gain is enabled.	No action needed.
Nearzone measurement	The current sweep can be used as a measurement of the nearzone.	No action needed.

7.22.5 Interface Status

Interface Status messages that may appear on the Integral Display, on the Field Communicator, in DeltaV, or in RRM are shown in Table 7-8:

Table 7-8. Interface status

Message	Description	Action
Interface not OK	The interface measurement is not OK.	Check other interface status messages for reason.
Interface not found	No interface available Interface threshold to high	No action needed. Adjust Interface threshold, see "Interface Peak not found" on page 148.
Can't measure interface on horizontal probe	Interface cannot be measured when the probe is horizontally mounted.	Change the probe mounting or turn off interface measurement by changing the measurement mode.
Can't handle max possible interface thickness	With the current configuration, the maximum measurement range is too short to guarantee that the interface echo can always be found.	Accept the limitation or change the tank environment and device configuration.
Interface thickness close to max range	The interface is close to the limit where it will be lost due to the limited maximum measurement range.	No action needed but the interface echo may be lost if the upper product thickness increases.
Interface set to max thickness	No interface echo found. The upper product thickness is set the maximum value of the current level measurement.	No action needed.
Interface thickness greater than probe length	The interface was found below the probe end.	The Upper Product Dielectric Constant is probably incorrect.

7.22.6 Volume Calculation Status

Volume Calculation Status messages that may appear on the Integral Display, on the Field Communicator, or in RRM are shown in Table 7-9:

Table 7-9. Volume status

Message	Description	Action
Level is below lowest strapping point.	The measured level is below the lowest point in the given strapping table.	For a correct volume calculation in this region, change the strapping table.
Level is above highest strapping point.	The measured level is above the highest point in the given strapping table.	For a correct volume calculation in this region, change the strapping table.
Level out of range.	The measured level is outside the given tank shape.	Check if the correct tank type is chosen and check the configured Tank Height.
Strap table length not valid.	The configured strap table length is too small or too large.	Change the strapping table size to a valid number of strapping points. A maximum number of 20 strapping points can be entered.
Strap table not valid.	The strapping table is not correctly configured.	Check that both level and volume values in the strapping table are increasing with strapping table index.
Level not valid.	The measured level is not valid. No volume value can be calculated.	Check Measurement Status, Warning and Error Messages.
Volume configuration missing.	No volume calculation method is chosen.	Do a volume configuration.
Volume not valid.	The calculated volume is not valid.	Check the other volume status messages for the reason.

7.22.7 Analog output status

Analog output status messages that may appear on the integral display, on the Field Communicator, or in RRM are shown in Table 7-10.

NOTE
Analog output status messages may not appear on the integral display while the Rosemount 5300 Series transmitter runs in HART 7 multidrop mode.

Table 7-10. Analog output status

Message	Description	Action
Not connected	Analog output hardware is not connected.	
Alarm Mode	The analog output is in Alarm Mode.	Check Error and Warning Messages to find the reason for the Alarm.
Saturated	The analog output signal value is saturated, i.e. equal to the saturation value.	No action needed.
Multidrop	The transmitter is in Multidrop Mode. The analog output is fixed at 4 mA.	This is the normal setting when a device is used in Multidrop configuration.
Fixed Current mode	The analog output is in fixed current mode.	This mode is used when calibrating the Analog Output channel.
PV out of Limits	The Primary variable is out of range.	Check the Upper and Lower Range Value
Span Too Small	The configured span is too small.	Check the Upper and Lower Range Value.
Invalid Limits	The given Upper and Lower Sensor Limits are invalid.	Check that the difference between the Upper and Lower Sensor Limits is greater than the Minimum Span.

7.23 LCD Error Messages

Figure 7-26. The 5300 Display Panel displaying an error message

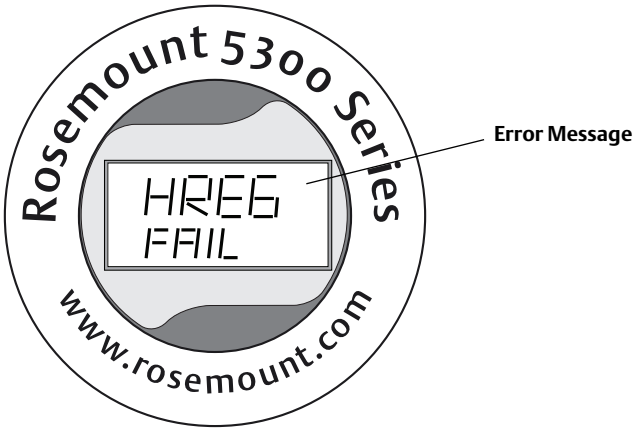

Table 7-11. Error messages displayed on the 5300 Display Panel

Error Message	Description
RAM FAIL	An error in the gauge data memory (RAM) has been detected during the startup tests. Note: this resets the gauge automatically.
FPROM FAIL	An error in the gauge program memory (FPROM) has been detected during the startup tests. Note: this resets the gauge automatically.
HREG FAIL	An error in the transmitter configuration memory (EEPROM) has been detected. The error is either a checksum error that can be solved by loading the default database, or a hardware error. NOTE: the default values are used until the problem is solved.
OMEM FAIL	Other memory failure.
MWM FAIL	An error in the microwave module.
DPLY FAIL	An error in the LCD.
MODEM FAIL	Modem hardware failure.
AOUT FAIL	An error in the Analog Out Module.
OHW FAIL	An unspecified hardware error has been detected.
ITEMP FAIL	An error in the internal temperature measurement.
MEAS FAIL	A serious measurement error has been detected.
CONFIG FAIL	At least one configuration parameter is outside the allowed range. NOTE: the default values are used until the problem is solved.
SW FAIL	An error has been detected in the transmitter software.

For more information on errors, see “Errors” on page 173.

7.24 LED Error Messages

For Rosemount 5300 transmitters without display, a flashing Light Emitting Diode (LED) is used for presentation of error messages.

Figure 7-27. Rosemount 5300 transmitters without display use a LED for presentation of error messages

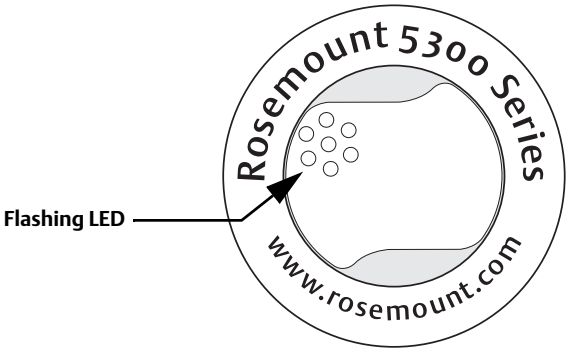

In normal operation, the LED flashes once every other second. When an error occurs, the LED flashes a sequence that corresponds to the Code number followed by a five second pause. This sequence is continuously repeated.

The following errors can be displayed:

Table 7-12. LED error codes

Code	Error
0	Ram Failure
1	FPROM
2	HREG
4	Microwave Module
5	Display
6	Modem
7	Analog Out
8	Internal Temperature
11	Hardware
12	Measurement
14	Configuration
15	Software

Example

Modem error (code 6) is displayed as the following flash sequence:

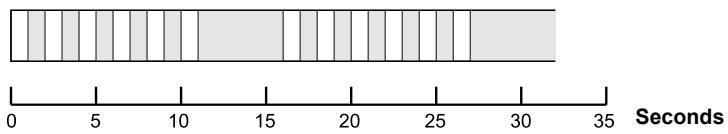

7.25 FOUNDATION fieldbus Error Messages

7.25.1 Resource Block

This section describes error conditions found in the Resource block. Read Table 7-13 through Table 7-15 to determine the appropriate corrective action.

Block Errors

Table 7-13 lists conditions reported in the BLOCK_ERR parameter.

Table 7-13. Resource Block BLOCK_ERR messages

Condition Name and Description
Other
Simulate Active: This indicates that the simulation switch is in place. This is not an indication that the I/O blocks are using simulated data
Device Fault State Set
Device Needs Maintenance Soon
Memory Failure: A memory failure has occurred in FLASH, RAM, or EEPROM memory
Lost Static Data: Static data that is stored in non-volatile memory has been lost
Lost NV Data: Non-volatile data that is stored in non-volatile memory has been lost
Device Needs Maintenance Now
Out of Service: The actual mode is out of service

Table 7-14. Resource Block SUMMARY_STATUS messages

Condition Name
Uninitialized
No repair needed
Repairable
Call Service Center

Table 7-15. Resource Block DETAILED_STATUS with recommended action messages

Condition Name	Recommended Action
LOI Transducer block error	1. Restart processor 2. Check display connection 3. Call service center
Sensor Transducer block error	1. Restart processor 2. Check Rosemount 5300 cable 3. Call service center
Mfg. Block integrity error	1. Restart processor 2. Call service center
Non-Volatile memory integrity error	1. Restart processor 2. Call service center
ROM integrity error	1. Restart processor 2. Call service center

7.25.2 Transducer Block

This section describes error conditions found in the Sensor Transducer Block.

Table 7-16. Transducer Block BLOCK_ERR messages

Condition Name and Description
Other
Out of Service: The actual mode is out of service

Table 7-17. Transducer Block XD_ERR messages

Condition Name and Description
Electronics Failure: An electrical component failed
I/O Failure: An I/O failure occurred
Data Integrity Error: Data stored in the device is no longer valid due to a non-volatile memory checksum failure, a data verify after write failure, etc.
Algorithm Error: The algorithm used in the transducer block produced an error due to overflow, data reasonableness failure, etc.

7.25.3 Analog Input (AI) Function Block

This section describes error conditions that are supported by the AI Block. Read Table 7-19 to determine the appropriate corrective action.

Table 7-18. AI BLOCK_ERR Conditions

Condition Number	Condition Name and Description
0	Other
1	**Block Configuration Error:** the selected channel carries a measurement that is incompatible with the engineering units selected in XD_SCALE, the L_TYPE parameter is not configured, or CHANNEL = zero
3	**Simulate Active:** Simulation is enabled and the block is using a simulated value in its execution
7	**Input Failure/Process Variable has Bad Status:** The hardware is bad, or a bad status is being simulated
14	Power Up
15	**Out of Service:** The actual mode is out of service

Table 7-19. Troubleshooting the AI block

Symptom	Possible Causes	Recommended Actions
Bad or no level readings (Read the AI "BLOCK_ERR" parameter)	BLOCK_ERR reads OUT OF SERVICE (OOS)	1. AI Block target mode set to OOS. 2. Resource Block OUT OF SERVICE.
	BLOCK_ERR reads CONFIGURATION ERROR	1. Check CHANNEL parameter (see "CHANNEL" on page 114). 2. Check L_TYPE parameter (see "L_TYPE" on page 114). 3. Check XD_SCALE engineering units. (see "XD_SCALE and OUT_SCALE" on page 115.
	BLOCK_ERR reads POWERUP	Download Schedule into block. Refer to host for downloading procedure.
	BLOCK_ERR reads BAD INPUT	1. Sensor Transducer Block Out Of Service (OOS). 2. Resource Block Out of Service (OOS).
	No BLOCK_ERR but readings are not correct. If using Indirect mode, scaling could be wrong	1. Check XD_SCALE parameter. 2. Check OUT_SCALE parameter. (see "XD_SCALE and OUT_SCALE" on page 115).
OUT parameter status reads UNCERTAIN and substatus reads EngUnitRangViolation	Out_ScaleEU_0 and EU_100 settings are incorrect.	See "XD_SCALE and OUT_SCALE" on page 115.
Mode will not leave OOS	Target mode not set	Set target mode to something other than OOS.
	Configuration error	BLOCK_ERR will show the configuration error bit set. The following are parameters that must be set before the block is allowed out of OOS: CHANNEL must be set to a valid value and cannot be left at the initial value of 0. XD_SCALE.UNITS_INDX must match the units in the transducer block channel value. L_TYPE must be set to Direct, Indirect, or Indirect Square Root and cannot be left at the initial value of 0.
	Resource block	The actual mode of the Resource block is OOS. See Resource Block Diagnostics for corrective action.
	Schedule	Block is not scheduled and therefore cannot execute to go to Target Mode. Schedule the block to execute.
Process and/or block alarms will not work	Features	FEATURES_SEL does not have Alerts enabled. Enable the Alerts bit.
	Notification	LIM_NOTIFY is not high enough. Set equal to MAX_NOTIFY.
	Status Options	STATUS_OPTS has Propagate Fault Forward bit set. This should be cleared to cause an alarm to occur.
Value of output does not make sense	Linearization Type	L_TYPE must be set to Direct, Indirect, or Indirect Square Root and cannot be left at the initial value of 0.
	Scaling	Scaling parameters are set incorrectly: XD_SCALE.EU0 and EU100 should match that of the transducer block channel value. OUT_SCALE.EU0 and EU100 are not set properly.
Cannot set HI_LIMIT, HI_HI_LIMIT, LO_LIMIT, or LO_LO_LIMIT Values	Scaling	Limit values are outside the OUT_SCALE.EU0 and OUT_SCALE.EU100 values. Change OUT_SCALE or set values within range.

Section 8 Safety Instrumented Systems (4-20 mA only)

Safety messages ..... **page 188**
Terms and definitions ..... **page 189**
Safety Instrumented System (SIS) Certification ..... **page 189**
Safety-certified identification ..... **page 190**
Functional specifications ..... **page 191**
Installation in SIS applications ..... **page 191**
Configuring in SIS applications ..... **page 192**
SIS operation and maintenance ..... **page 193**
Inspection ..... **page 198**
Specifications ..... **page 199**

8.1 Safety messages

Procedures and instructions in this section may require special precautions to ensure safety of personnel performing the operations. Information that raises potential safety issues is indicated by a warning symbol (⚠). Refer to the following safety messages before performing an operation preceded by this symbol.

⚠ WARNING

Failure to follow these installation guidelines could result in death or serious injury.

Make sure only qualified personnel perform the installation.

Use the equipment only as specified in this manual. Failure to do so may impair the protection provided by the equipment.

Explosions could result in death or serious injury.

Verify that the operating environment of the transmitter is consistent with the appropriate hazardous locations certifications.

Before connecting a HART®-based communicator in an explosive atmosphere, make sure the instruments in the loop are installed in accordance with intrinsically safe or non-incendive field wiring practices.

Electrical shock could cause death or serious injury.

Use extreme caution when making contact with the leads and terminals.

⚠ WARNING

Any substitution of non-authorized parts or repair, other than exchanging the complete transmitter head or probe assembly, may jeopardize safety and is prohibited.

Unauthorized changes to the product are strictly prohibited as they may unintentionally and unpredictably alter performance and jeopardize safety. Unauthorized changes that interfere with the integrity of the welds or flanges, such as making additional perforations, compromise product integrity and safety. Equipment ratings and certifications are no longer valid on any products that have been damaged or modified without the prior written permission of Emerson Process Management. Any continued use of product that has been damaged or modified without prior written authorization is at the customer's sole risk and expense.

8.2 Terms and definitions

FMEDA: Failure Modes, Effects and Diagnostic Analysis

HART: Highway Addressable Remote Transducer

HFT: Hardware Fault Tolerance

PFD_{AVG}: Average Probability of Failure on Demand

Safety Response Time: The delay between a change in the measured process and the indication of that change at the safety-rated output.

SIF: Safety Instrumented Function

SIL: Safety Integrity Level, discrete level (one out of a possible four) for specifying the safety integrity requirements of the safety functions to be allocated to the E/E/PE safety-related systems, where Safety Integrity Level 4 has the highest level of safety integrity, and Safety Integrity Level 1 has the lowest.

SIS: Safety Instrumented System – Implementation of one or more Safety Instrumented Functions. A SIS is composed of any combination of sensor(s), logic solver(s), and final element(s).

SFF: Safe Failure Fraction

Type B device: Complex device (using microcontrollers or programmable logic)

8.3 Safety Instrumented System (SIS) Certification

This section applies to the 4-20 mA Rosemount 5300 Series safety-certified transmitter used in Safety Instrumented Systems (SIS) applications. The Rosemount 5300 Series safety-certified transmitter is certified to:

- Low and high demand: Type B element
- SIL 2 for random integrity @ HFT=0
- SIL 3 for random integrity @ HFT=1
- SIL 3 for systematic capability

NOTE:
Refer to the 5300 FMEDA(1) report for failure rate data, assessment details, and assumptions regarding failure rate analysis.

(1) The 5300 FMEDA report is accessible at www.emersonprocess.com/rosemount/safety.

8.4 Safety-certified identification

All Rosemount 5300 Series transmitters must be identified as safety-certified before installing into SIS systems. Table 8-1 lists the versions of the Rosemount 5300 Series transmitter that have been considered for the hardware assessment, to which this section applies.

- Models with the QS option code are supplied with a manufacturer's prior use certificate of FMEDA data.
- Models with the QT option code are IEC 61508 certified by an accredited 3rd party agency for use in safety instrumented systems up to SIL 3.
  (For single use (1oo1) capable up to SIL 2 and for redundant use (1oo2 or 2oo3) capable up to SIL 3.)

Table 8-1. Rosemount 5300 Series safety-certified option model codes

5300 4-20 mA HART Guided Wave Radar Level and Interface Transmitter	
Hardware	Model 5301Hxxxxxxxxxxxxxxx**QS** or 5301Hxxxxxxxxxxxxxxx**QT** Model 5302Hxxxxxxxxxxxxxxx**QS** or 5302Hxxxxxxxxxxxxxxx**QT** Model 5303Hxxxxxxxxxxxxxxx**QS** or 5303Hxxxxxxxxxxxxxxx**QT** **NOTE:** Transmitters will be marked with "QS" or "QT" in the model code on the label.
Software/Firmware	2.A1 - 2.J0

To identify a Rosemount 5300 Series safety-certified transmitter:

- Verify the option code QS or QT in the model code, on the label affixed to the outside of the transmitter head
- Check if a yellow label is affixed to the transmitter head for option code QT
- Before doing any configuration, write down the serial number from the label, and make sure you are connected to the correct transmitter by verifying the same serial number in your communication device

NOTE:
In Rosemount Radar Master, this information can be found in the Device Properties window. Select **Device** > **Properties**.

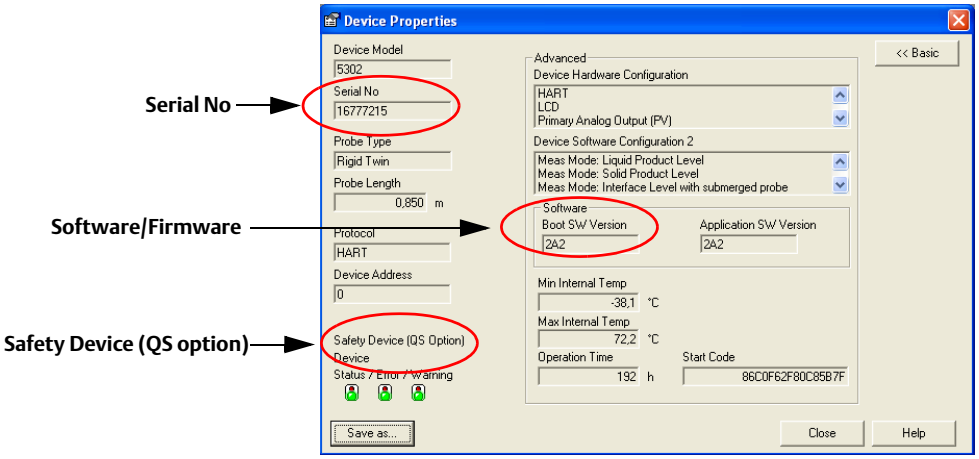

8.5 Functional specifications

The safety function is based on the analog output 4-20 mA, used as the safety variable. It is configured to activate the alarm function if an error occurs. If a measured value goes beyond the measurement range, the transmitter enters saturation mode (limit alarm is disabled) or alarm mode, depending on the current configuration. The minimum time for the alarm condition is 200 ms.

Only the 4-20 mA output can be used in the safety function.

The HART protocol can only be used for setup, calibration, and diagnostic purposes, not for safety critical operation. The measurement signal used by the logic solver must be the analog 4-20 mA signal proportional to the level generated.

8.6 Installation in SIS applications

The device should be installed and configured as a level sensing device per manufacturer's instructions. The materials must be compatible with process conditions and process fluids. No special installation is required in addition to the standard installation practices outlined in this manual.

Environmental and operational limits are available in Appendix A: Reference data.

The loop must be designed so that the terminal voltage does not drop below the minimum input voltage when the transmitter output is 22.5 mA. See values in Table 8-2.

Table 8-2. Minimum input terminal voltage (U_i) at different currents

Hazardous approval	Current			
	3.60 mA	3.75 mA	21.75 mA	22.50 mA
	Minimum input voltage (U_I)			
Non-Hazardous Installations and Intrinsically Safe Installations	16 Vdc	16 Vdc	11 Vdc	11 Vdc
Explosion-proof / Flameproof Installations	20 Vdc	20 Vdc	15.5 Vdc	15.5 Vdc

It is assumed that the personnel installing, configuring, and operating the system have the knowledge equal or greater than that of a qualified Instrument Technician familiar with safety-related systems, process control applications, and general instrument use.

NOTE:
The Rosemount 5300 Series transmitter is not safety-rated during maintenance work, configuration changes, multidrop, loop test, or other activity that affects the safety function. Alternative means should be used to ensure process safety during such activities.

8.7 Configuring in SIS applications

Use a HART-compliant master, such as Rosemount Radar Master or a Field Communicator, to communicate with and verify configuration of the Rosemount 5300 Series. A full review of configuration methods is available in Section 5: Configuration.

These instructions are applicable to the Rosemount 5300 Series safety-certified options with any differences noted.

Damping

User adjusted damping will affect the transmitter's ability to respond to process changes. Therefore, the *damping values + response time* should not exceed the loop requirements. For further information on damping, see "Echo tracking" on page 292.

Alarm and saturation levels

DCS or safety logic solver should be configured to handle both High alarm and Low alarm. It is also required that the transmitter is configured for High or Low alarm. Table 8-1 identifies the alarm levels available and their operation values(1).

Figure 8-1. Alarm levels and operation values

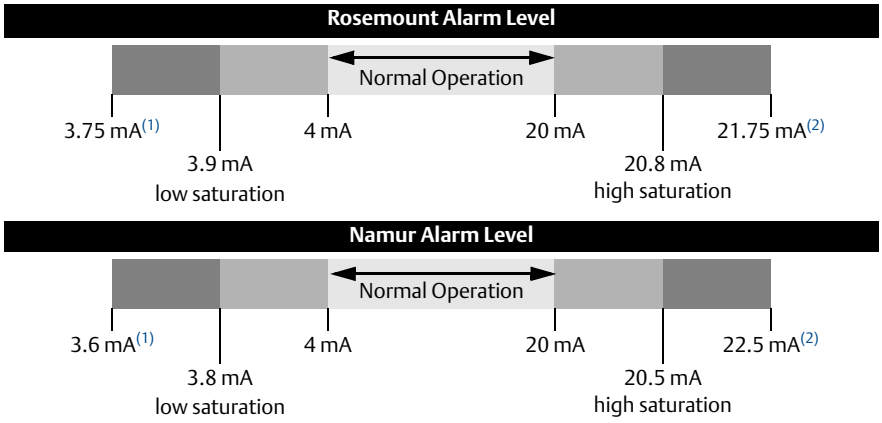

(1) Transmitter Failure, hardware or software alarm in Low position.
(2) Transmitter Failure, hardware or software alarm in High position.

It is assumed that the current output signal is fed to a SIL 2-compliant analog input board of a safety logic solver. For instructions on alarm level settings see section "Analog output (HART)" on page 80.

NOTE:
Only the High or Low Alarm Mode can be used for the safety function. Do not choose Freeze Current.

(1) In certain cases, the transmitter does not go into the user defined alarm state. For example, in case of a short circuit, the transmitter goes into High Alarm state even if Low Alarm has been configured.

Write protection

A Rosemount 5300 Series safety-certified transmitter should always be protected from unintentional configuration changes by a password protected function. It is recommended to use write protection described in section "Write protecting a transmitter" on page 162.

Site acceptance

After installation and/or configuration, proper operation of the transmitter (including verification of all configuration changes) must be verified. A site acceptance test is therefore required. The proof test outlined in this document can be used for this.

8.8 SIS operation and maintenance

Proof test

The following proof test is recommended. If an error is found in the safety function, the measuring system must be switched out of service and the process held in a safe state by means of other measures. Proof test results and corrective actions taken must be documented at www.emersonprocess.com/rosemount/safety.

NOTE:
For a valid result, always perform the proof test on the product that will be stored in the tank while the device is in operation.

NOTE:
Before every test, make sure you are connected to the correct transmitter by verifying QT/QS in the model code on the label and your software version. Also verify that the serial number on the label matches the one in your configuration tool.

Make sure to enable write protection as soon as you are finished.

Required Tools: HART host/communicator and mA meter.

Note that prior to these tests, inspect the echo curve to ensure that no disturbing echoes affecting the measurement performance are present.

Rosemount Radar Master:

- Go to **Setup** > **Echo Curve**.

AMS Device Manager and Field Communicator:

- Go to **Service Tools** > **Echo Tuning** > **Echo Curve**.

8.8.1 Suggested comprehensive proof test

The suggested proof test described below will detect approximately **80%** of possible DU failures in the Rosemount 5300 Series transmitters.

1. Bypass the safety function and take appropriate action to avoid a false trip.
2. Disable write protection in device (if enabled).

Rosemount Radar Master:

a. In the **Tools** menu, select **Lock/Unlock Configuration Area**.

b. Enter **Password** to unlock.

AMS Device Manager and Field Communicator:

a. Go to **Configure** > **Manual Setup** > **Device Setup** > **Security**.

For HART Device Revision 3: Go to **Device Diagnostics** > **Tools** > **General**.

b. Click **Write Protect** and follow the instructions.

3. Retrieve any diagnostics and take appropriate action.

Rosemount Radar Master:

- Go to **Tools** > **Diagnostics**. See "Diagnostic Messages" on page 172 for recommended actions.

AMS Device Manager and Field Communicator:

- Go to **Service Tools** > **Alerts**. See "Diagnostic Messages" on page 172 for recommended actions.

For HART Device Revision 3: Go to **Device Diagnostics** > **Diagnostics**.

4. Using Loop Test, enter current value (mA) representing high alarm current. Verify that analog output current and terminal voltage are correct using reference meters.

This step tests for voltage compliance problems, such as low power supply voltage or increased wiring resistance.

Rosemount Radar Master:

a. Go to **Setup** > **Output** > **Analog Out 1** and click **Loop test**.

b. Enter current value representing high alarm current.

c. Click **Start** to output current.

d. Verify that analog output current is correct.

e. Verify that terminal voltage is correct. See values in Table 8-2.

f. Click **Stop** to end loop test.

AMS Device Manager and Field Communicator:

a. Go to **Configure** > **Manual Setup** > **Device Setup** > **Output**.

For HART Device Revision 3: Go to **Configure/Setup** > **Analog Output** > **Analog Out**.

b. Click **Loop Test** and select **Other**.

c. Enter current value representing high alarm current.

d. Verify that analog output current is correct.

e. Verify that terminal voltage is correct. See values in Table 8-2.

f. Click **Abort** to end loop test.

5. Using Loop Test, enter current value (mA) representing low alarm current. Verify that analog output current and terminal voltage are correct using reference meters.

   This step tests for possible quiescent current related failures.

   Rosemount Radar Master:

   a. Go to **Setup** > **Output** > **Analog Out 1** and click **Loop test**.
   b. Enter current value representing low alarm current.
   c. Click **Start** to output current.
   d. Verify that analog output current is correct.
   e. Verify that terminal voltage is correct. See values in Table 8-2.
   f. Click **Stop** to end loop test.

   AMS Device Manager and Field Communicator:

   a. Go to **Configure** > **Manual Setup** > **Device Setup** > **Output**.

      For HART Device Revision 3: Go to **Configure/Setup** > **Analog Output** > **Analog Out**.
   b. Click **Loop Test** and select **Other**.
   c. Enter current value representing low alarm current.
   d. Verify that analog output current is correct.
   e. Verify that terminal voltage is correct. See values in Table 8-2.
   f. Click **Abort** to end loop test.

6. Enable write protection.

   Rosemount Radar Master:

   a. In the **Tools** menu, select **Lock/Unlock Configuration Area**.
   b. Enter **Password** to lock.

   AMS Device Manager and Field Communicator:

   a. Go to **Configure** > **Manual Setup** > **Device Setup** > **Security**.

      For HART Device Revision 3: Go to **Device Diagnostics** > **Tools** > **General**.
   b. Click **Write Protect** and follow the instructions.

7. Inspect the transmitter for any leaks, visible damage, or contamination.

8. Perform a two-point calibration check of the device by verifying level output for two points on the probe within measuring range. Verify that the current output corresponds to the level input values using a known reference measurement.

   This step verifies that the analog output is correct in the operating range and that the Primary Variable is properly configured.

   Note that the applied level has to be between Upper and Lower Range values, otherwise the device enters alarm mode. If level is outside Maximum Measuring Range, the level reading accuracy may be reduced. For best performance, use the 4-20 mA range points as calibration points. See Figure 8-2.

Figure 8-2. Range Values

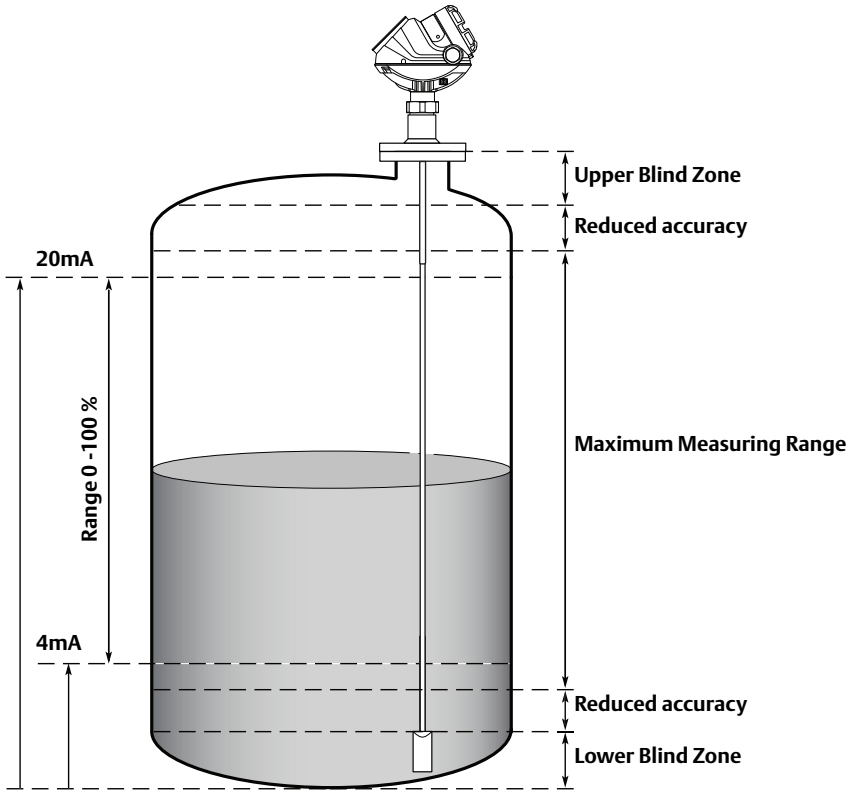

9. Restore the loop to full operation.

10. Remove the bypass from the safety PLC or otherwise restore normal operation.

11. Document “as found” conditions and test results using a tool like SILStat™.

For troubleshooting the transmitter, see Section 7: Service and troubleshooting.

8.8.2 Suggested simple proof test

The suggested proof test described below will detect approximately **50%** of possible DU failures in the Rosemount 5300 Series transmitters.

1. Bypass the safety function and take appropriate action to avoid a false trip.
2. Disable write protection if the function is enabled.
3. Retrieve any diagnostics and take appropriate action.
4. Using Loop Test, enter current value (mA) representing high alarm current. Verify that analog output current and terminal voltage are correct using reference meters.(1)
5. Using Loop Test, enter current value (mA) representing low alarm current. Verify that analog output current and terminal voltage are correct using reference meter.(2)
6. Enable write protection.
7. Inspect the transmitter for any leaks, visible damage or contamination.
8. Remove the bypass and otherwise restore normal operation.
9. Document “as found” conditions and test results using a tool like SILStat™.

For troubleshooting the transmitter, see Section 7: Service and troubleshooting.

Calculations of average probability of failure on demand

PFD_{AVG} calculation can be found in the FMEDA report located at www.rosemount.com/safety.

(1) This step tests for compliance voltage problems, such as a low loop power supply voltage, or increased wiring resistance. This also tests for other possible failures.

(2) This step tests for possible quiescent current related failures.

8.9 Inspection

Visual inspection

It is recommended to inspect the probe for possible build up or clogging.

Special tools

Not required.

Product repair

The Rosemount 5300 Series is repairable by major component replacement. All failures detected by the transmitter diagnostics or by the proof test must be reported. Feedback can be submitted electronically at www.emersonprocess.com/rosemount/safety (**Contact Us**).

Reset to factory settings

Transmitters with option code QS or QT are shipped with a special factory pre-configuration. If the device needs to be reset to factory settings, please contact your local Emerson Process Management representative to get the factory pre-configuration file to be uploaded to the device or use the backup file created upon receiving the transmitter. This will ensure the proper settings for your safety device are configured and your QS or QT certificate is still valid.

8.10 Specifications

For general specifications, see Appendix A: Reference data or refer to the Rosemount 5300 Series Product Data Sheet (Document No. 00813-0100-4530).

The Rosemount 5300 Series must be operated in accordance with the functional and performance specifications provided in Appendix A: Reference data.

Reference conditions can be found in "Specifications" on page 202.

SIS reference

Failure rate data

The FMEDA report includes failure rates. The full report is accessible at www.emersonprocess.com/rosemount/safety.

Failure values

- Safety accuracy: 2.0%(1)
- Safety response time: at least below 8 seconds for specific configurations

  Higher Safety Response Time is allowed for other user-selectable configurations, for example damping, level rate etc. See "Set alarm limits" on page 71 for more information.
- Self-diagnostics test interval: at least every 90 minute

Product life

50 years

- based on worst case component wear-out mechanisms
- not based on wear-out of process wetted materials

Spare parts

Additional spare parts are available in section "Spare parts" on page 242.

(1) The safety accuracy of the Rosemount 5300 Series safety-certified option is ±2% of full span (± 0.32 mA). See "Measuring Performance" on page 202 *for additional application-specific measuring error.*

Appendix A Reference data

Specifications . . . . . **page 202**
Dimensional drawings . . . . . **page 215**
Ordering information . . . . . **page 229**
Spare parts . . . . . **page 242**

A.1 Specifications

General	
Product	Rosemount 5300 Series Guided Wave Radar Level and Interface Transmitter; • Model 5301, Liquid Level or Interface Transmitter (interface available for fully submerged probe). • Model 5302 Liquid Level and Interface Transmitter. • Model 5303 Solids Level Transmitter.
Measurement Principle	Time Domain Reflectometry (TDR).
Reference Conditions	Single Standard probe, 77°F (25°C) in water (DC=80) and ambient pressure in a 4" pipe using Trim Near Zone function.
Microwave Output Power	Nominal 300 µW, Max. 45 mW.
CE-mark	Complies with applicable directives (EMC, ATEX).
IEC 61508	SIL3 Capable: IEC 61508 certified by an accredited 3rd party agency for use in safety instrumented systems up to SIL 3 (for single use (e.g. 1oo1) up to SIL 2 and for redundant use (e.g. 1oo2) up to SIL 3). Option code is QT. Models with QS option code are supplied with a manufacturer's prior use certificate of FMEDA data.
Start-up Time	< 40 s
Measuring Performance	
Reference Accuracy	± 0.12 in. (3 mm) or 0.03% of measured distance, whichever is greatest.(1) (2) (3)
Repeatability	± 0.04 in. (1 mm).
Ambient Temperature Effect	± 0.008 in. (0.2 mm) /°K or ± 30 ppm/°K of measured value, whichever is greatest.
Update Interval	Minimum 1 update per second.
Measuring Range	16 in. (0.4 m) to 164 ft (50 m).
Display / Configuration	
Integral Display	The integral digital display can toggle between: level, distance, volume, internal temperature, interface distance, interface level, peak amplitudes, interface thickness, percentage of range, analog current out. Note! The display cannot be used for configuration purposes.
Output Variables	All models: Level, Distance to Level, Volume, Level Rate, Signal Strength, Internal Temperature, Signal Quality, Surface/Noise Margin, Vapor DC, Analog Output Current(4) and % of Range(4). Model 5301 (in addition to the above for the case with fully submerged probe): Interface Level and Interface Distance. Model 5302 (in addition to the above): Interface Level, Interface Level Rate, Interface Distance, Upper Volume, Lower Volume and Upper Product Thickness.
Output Units	Level, Interface and Distance: ft, inches, m, cm or mm. Level Rate: ft/s, m/s, in./min, m/h. Volume: ft^3, $inch^3$, US gals, Imp gals, barrels, yd^3, m^3 or liters. Temperature: °F and °C.
Configuration Tools	HART: Rosemount Radar Master, Rosemount Field Communicator, AMS Suite or any other DD (Device Description) compatible host system. FOUNDATION fieldbus: Rosemount Radar Master, Field Communicator, DeltaV® or any other DD (Device Description) compatible host system.
FOUNDATION fieldbus Blocks	Resource block, 3 Transducer blocks, 6 AI blocks, PID block, ISEL block, SGCR block, ARTH block, and OS block.

Display / Configuration (continued)	
FOUNDATION fieldbus Class (Basic or Link Master)	Link Master (LAS).
FOUNDATION fieldbus Block Execution Time	AI-block: 30 ms. PID-block: 40 ms. ARTH-, ISEL-, OSPL-block: 65 ms. CHAR-block: 75 ms.
FOUNDATION fieldbus Instantiation	No.
Conforming FOUNDATION fieldbus	ITK 5.0.
FOUNDATION fieldbus Alert Support	Yes.
Damping	0-60 s (2 s, default value).
Electric	
Power Supply	HART: 16-42.4 Vdc (16-30 Vdc in IS applications, 20-42.4 Vdc in Explosion-proof / Flameproof applications). FOUNDATION fieldbus: 9-32 Vdc (9-30 Vdc in IS applications, and 16-32 Vdc in Explosionproof / Flameproof applications). FISCO, IS applications: 9-17.5 Vdc.
Internal Power Consumption	< 50 mW in normal operation.
Output	HART 4-20 mA current loop or FOUNDATION fieldbus.
Quiescent Current Draw (FOUNDATION fieldbus)	21 mA
Signal on Alarm	Standard : Low = 3.75 mA, High = 21.75 mA. Namur NE 43: Low = 3.60 mA, High = 22.50 mA.
Saturation Levels	Standard: Low = 3.9 mA, High = 20.8 mA. Namur NE 43: Low = 3.8 mA, High = 20.5 mA.
IS Parameters	See Appendix B: Product certifications.
Cable Entry	½ - 14 NPT for cable glands or conduit entries. Optional: M20 x 1.5 conduit / cable adapter, M12 4-pin male eurofast® connector or A size Mini 4-pin male minifast® connector.
Output Cabling	Twisted shielded pairs, 18-12 AWG.
Mechanical	
Probes	Coaxial: 1.3 ft (0.4 m) to 19.7 ft (6 m) Rigid Twin Lead: 1.3 ft (0.4 m) to 9.8 ft (3 m) Flexible Twin Lead: 3.3 ft (1 m) to 164 ft (50 m) Rigid Single Lead (0.3 in./8 mm): 1.3 ft (0.4 m) to 9.8 ft (3 m) Rigid Single Lead (0.5 in./13 mm): 1.3 ft (0.4 m) to 19.7 ft (6 m) Flexible Single Lead: 3.3 ft (1 m) to 164 ft (50 m).
Tensile Strength	4 mm Flexible Single Lead probe (model code 5A, 5B): 2698 lb (12 kN) 6 mm Flexible Single Lead probe (model code 6A, 6B): 6519 lb (29 kN) Flexible Twin Lead probe: 2023 lb (9 kN).
Collapse Load	4 mm Flexible Single Lead probe (model code 5A, 5B): 3597 lb (16 kN) 6 mm Flexible Single Lead probe (model code 6A, 6B): 7868 lb (35 kN)
Sideway Capacity	Coaxial: 73.7 ft lbf or 3.7 lb at 19.7 ft (100 Nm or 1.67 kg at 6 m) Rigid Twin Lead: 2.2 ft lbf or 0.22 lb at 9.8 ft (3 Nm or 0.1 kg at 3 m) Rigid Single Lead: 4.4 ft lbf or 0.44 lb at 9.8 ft (6 Nm or 0.2 kg at 3 m)

Material Exposed to Tank Atmosphere	• 316L SST (EN 1.4404), PTFE, PFA[5] and O-ring materials (Standard Probe, Material model code 1) or • Alloy C-276 (UNS N10276), PTFE, PFA[5] and O-ring materials (Standard Probe, Material model code 2) or • Alloy 400 (UNS N04400), PTFE, PFA[5] and O-ring materials (Standard Probe, Material model code 3) • PTFE[6] (Standard Probe, Material model code 7) or • PTFE[6], 316 L SST (EN 1.4404) and O-ring materials (Standard Probe, Material model code 8) • 316L SST (EN 1.4404), Ceramic (Al_2O_3), Graphite, Alloy 600 (HTHP Probe, Material model code 1) • Alloy C-276 (UNS N10276), Ceramic (Al_2O_3), Graphite, Alloy 600 (HTHP Probe, Material model code 2, H) • 316L SST (EN 1.4404), Ceramic (Al_2O_3), Graphite, PFA, PTFE, Alloy 600 (HP Probe, Material model code 1) • Alloy C-276 (UNS N10276), Ceramic (Al_2O_3), Graphite, PFA, PTFE, Alloy 600 (HP Probe, Material model code 2 and H) • 316L SST (EN 1.4404), Ceramic (Al_2O_3), Graphite, PFA, PTFE, Alloy 600 (C Probe, Material model code 1) See "Ordering information" on page 229.
Dimensions	See "Dimensional drawings" on page 215.
Probe Angle	0 to 90 degrees.
Housing / Enclosure	Polyurethane-covered Aluminum or SST Grade CF8M (ASTM A743).
Flanges, Threads	See "Ordering information" on page 229.
Height Above Flange	See "Ordering information" on page 229.
Weight	Transmitter Head (TH): 4.4 lbs (2 kg). SST 10.8 lbs (4.9 kg). Flange: depends on flange size. Coaxial probe: 0.67 lbs/ft (1 kg/m). Rigid Single Lead probe (0.3 in./8 mm): 0.27 lbs/ft (0.4 kg/m). Rigid Single Lead probe (0.5 in./13 mm): 0.71 lbs/ft (1.06 kg/m). Rigid Twin Lead probe: 0.40 lbs/ft (0.6 kg/m). Flexible Single Lead probe: 0.05 lbs/ft (0.08 kg/m). Flexible Twin Lead probe: 0.09 lbs/ft (0.14 kg/m). End weight: 0.88 lbs (0.40 kg) for the 4 mm single lead probe, 1.2 lbs (0.55 kg) for the 6 mm single lead probe, 1.3 lb (0.60 kg) for the 6 mm flexible probe/PA coated flexible probe, and1.3 lbs (0.60 kg) for twin lead probes.
Environment	
Ambient Temperature	Non-Hazardous, HART communication: -40°F to 176°F (-40°C to 80°C) IS/EEx ia and XP/EEx d, HART communication: -58°F to 158°F (-50°C to 70°C) IS/EEx ia and XP/EEx d, FOUNDATION fieldbus: -58°F to 140°F (-50°C to 60°C) LCD readable in: -4°F to 158°F (-20°C to 70°C)
Storage Temperature	-58°F to 194°F (-50°C to 90°C). LCD: -40°F to 185°F (-40°C to 85°C).
Process Temperature[7]	Standard: -40°F to +302°F (-40°C to +150°C) HTHP: -76°F to +752°F (-60°C to +400°C) HP: -76°F to +392°F (-60°C to +200°C) C: -320°F to +392°F (-196°C to +200 °C) See temperature and pressure diagrams on page 210.
Process Pressure[7]	Standard: Full vacuum to 580 psig (-1 to 40 Bar) HTHP: Full vacuum to 5000 psig (-1 to 345 Bar) HP: Full vacuum to 5000 psig (-1 to 345 Bar) C: Full vacuum to 5000 psig (-1 to 345 Bar) See temperature and pressure diagrams on page 210.
Humidity	0 - 100% Relative Humidity.
Ingress Protection	NEMA 4X, IP 66 and IP67.
Telecommunication (FCC and R&TTE)	FCC part 15 (1998) subpart B and R&TTE (EU directive 99/5/EC). Considered to be an unintentional radiator under the Part 15 rules.
Factory Sealed	Yes.

Vibration Resistance	Aluminum housing: IEC 60770-1 Level 1. Stainless Steel housing: IACS E10.
Electromagnetic Compatibility	Emission and Immunity: EMC directive 2004/108/EC, EN61326-1:2006 and EN61326-3-1:2006. NAMUR recommendations NE21
Built-in Lightning Protection	EN61326, IEC 801-5, level 1 kV. T1 option: the transmitter complies with IEEE 587 Category B transient protection and IEEE 472 surge protection
Pressure Equipment Directive (PED)	Complies with 97/23/EC article 3.3.

(1) For probes with spacers, the accuracy may deviate close to the spacers.
(2) If the reference conditions are not met, an offset adjustment for the zero reference point may be necessary. The offset may be up to ± 25 mm.
(3) When using remote housing, the accuracy may be reduced.
(4) Not applicable for FOUNDATION fieldbus.
(5) PFA is a fluoropolymer with properties similar to PTFE.
(6) 1 mm PTFE cover.
(7) Final rating may be lower depending on flange and O-ring selection.

A.1.1 Accuracy over measuring range

The measuring range depends on probe type, dielectric constant of the product and installation environment, and is limited by the Blind Zones at the very top and bottom of the probe. In the Blind Zones, the accuracy exceeds ±1.18 in. (30 mm), and measurements may not be possible. Measurements close to the Blind Zones will have reduced accuracy.

The following conditions will impact the Blind Zones:

- If the single lead probes or twin probes are installed in a nozzle, the nozzle height shall be added to the specified Upper Blind Zone.
- The measuring range for the PTFE covered Flexible Single Lead probe includes the weight when measuring on a high dielectric media.
- When using a metallic centering disc, the Lower Blind Zone is 8 in. (20 cm), including weight if applicable. When using a PTFE centering disc, the Lower Blind Zone is not affected.

Figure A-1 to Figure A-3 illustrates the accuracy over measuring range at reference conditions with alternating probe types and varying dielectric constant of the product.

Figure A-1. Accuracy over measuring range for single lead probes

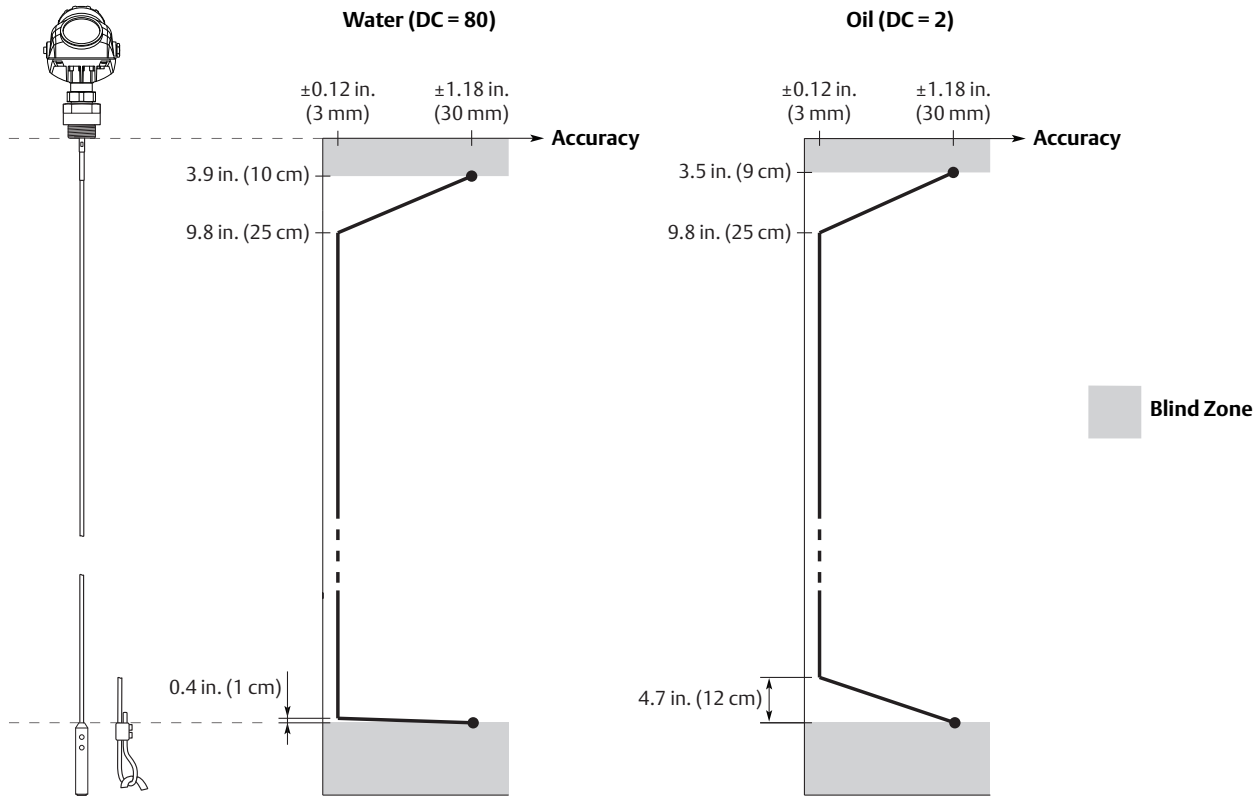

Figure A-2. Accuracy over measuring range for coaxial probe

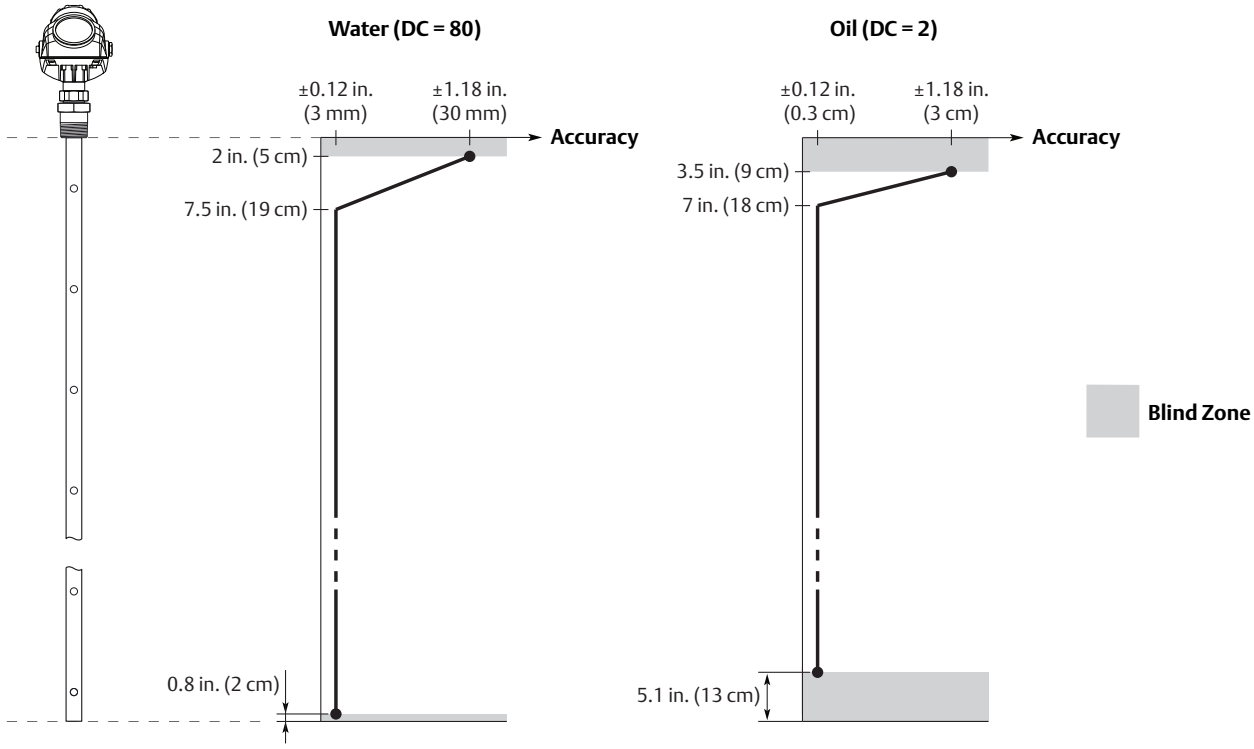

Figure A-3. Accuracy over measuring range for twin lead probes

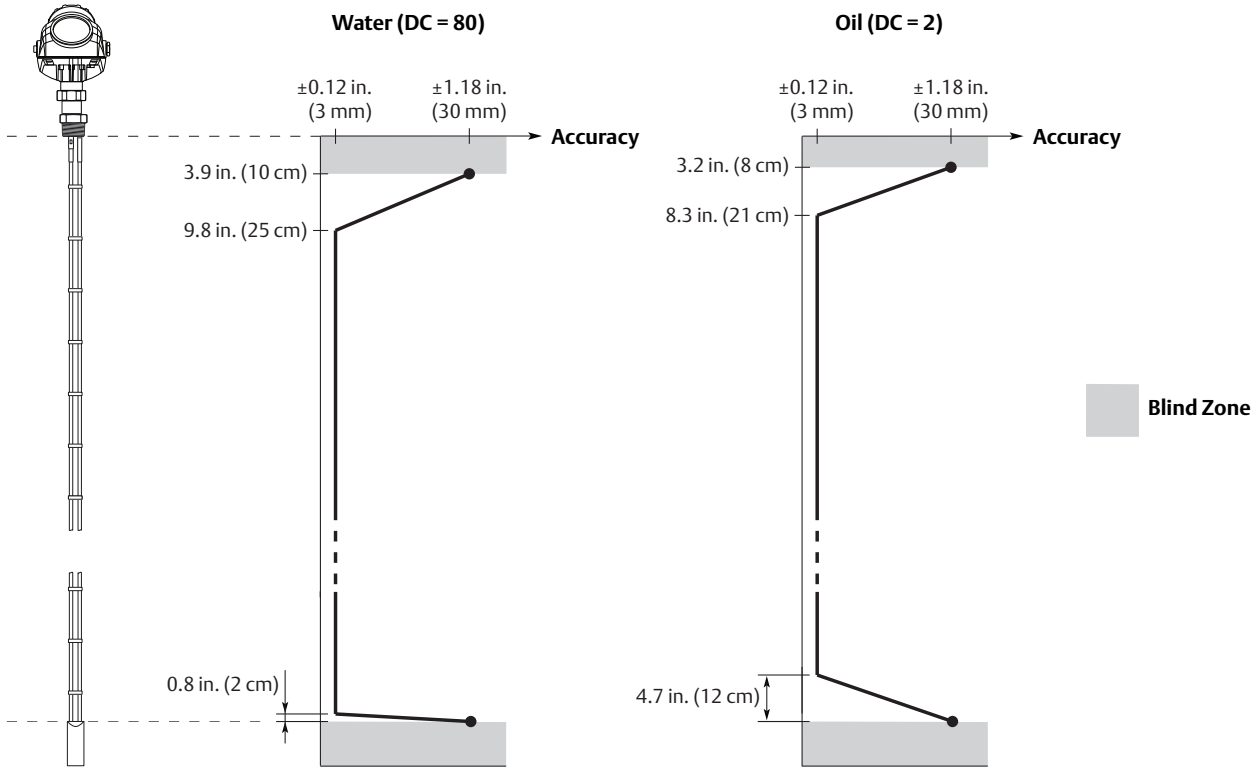

A.1.2 Maximum measuring range

The measuring range differs depending on probe type and characteristics of the application. The maximum measuring range differs based on application according to:

- Disturbing objects close to the probe
- Media with higher dielectric constant (ε_r) has better reflection and a longer measuring range
- Surface foam and particles in the tank atmosphere might affect measuring performance
- Heavy coating / contamination on the probe may reduce the measuring range and cause erroneous level readings
- Disturbing EMC environment in tank
- Tank material (e.g. concrete or plastic) for measurements with single lead probes

Table A-1 can be used as a guideline for clean liquids. See "Maximum measuring range for remote housing" on page 209 for the maximum measuring range when using Remote Housing.

Table A-1. Maximum measuring range and minimum dielectric constant

Rigid single lead	Flexible single lead[1]	Coaxial	Rigid twin lead	Flexible twin lead
Maximum measuring range				
9 ft 10 in. (3 m) - for 8 mm probes 14 ft 9 in. (4.5 m) - for 13 mm probes	164 ft (50 m)	19 ft 8 in. (6 m)	9 ft 10 in. (3 m)	164 ft (50 m)
Minimum dielectric constant at maximum measuring range				
1.4 (1.25 if installed in a metallic bypass or stilling well)[1][2]	1.4, up to 49 ft (15 m)[1] 1.8, up to 82 ft (25 m)[1] 2.0, up to 115 ft (35 m)[1] 3, up to 138 ft (42 m) 4, up to 151 ft (46 m) 6, up to 164 ft (50 m)	1.2 (Standard) 1.4 (HP/C) 2.0 (HTHP)	1.4	1.4, up to 82 ft (25 m)[1] 2.0, up to 115 ft (35 m)[1] 2.5, up to 131 ft (40 m)[1] 3.5, up to 148 ft (45 m) 6, up to 164 ft (50 m)

(1) The probe end projection software function will improve the minimum dielectric constant. Consult you local Emerson Process Management representative for details.
(2) Measuring range may be lower depending on installation.

A.1.3 Maximum measuring range for remote housing

Table A-2 shows the maximum recommended measuring range with Remote Housing for different RH lengths, installation types, dielectric constants, and probe types.

Table A-2. Remote housing measuring range

		Dielectric Constant	Rigid Single 8 mm	Rigid Single 13 mm	Flexible Single	Coaxial	Rigid Twin	Flexible Twin
1 m Remote Housing	Chamber / pipe installations ≤ 4 in. (100 mm)	1.4	4 ft (1.25 m)	15 ft (4.5 m)(2)	33 ft (10 m)(2) (1)	19 ft (6 m)	10 ft (3 m)(2)	33 ft (10 m)(2) (1)
		2	10 ft (3 m)(1)	15 ft (4.5 m)(2)	33 ft (10 m)(2) (1)	19 ft (6 m)	10 ft (3 m)(2)	33 ft (10 m)(2) (1)
		80	10 ft (3 m)	15 ft (4.5 m)(2)	33 ft (10 m)(2) (1)	19 ft (6 m)	10 ft (3 m)(2)	33 ft (10 m)(2) (1)
	Tank installations	1.4	4 ft (1.25 m)	4 ft (1.25 m)	4 ft (1.25 m)	19 ft (6 m)	4 ft (1.25 m)	4 ft (1.25 m)
		2	4 ft (1.25 m)	4 ft (1.25 m)	4 ft (1.25 m)	19 ft (6 m)	4 ft (1.25 m)	98 ft (30 m)(1)
		80	10 ft (3 m)(2)	10 ft (3 m)(1)	159 ft (48.5 m)(2)	19 ft (6 m)	10 ft (3 m)(2)	159 ft (48.5 m)(1)
2 m Remote Housing	Chamber / pipe installations ≤ 4 in. (100 mm)	1.4	9 ft (2.75 m)	15 ft (4.5 m)(1)	33 ft (10 m)(2) (1)	19 ft (6 m)	10 ft (3 m)(1)	33 ft (10 m)(2) (1)
		2	10 ft (3 m)(2)	15 ft (4.5 m)(1)	33 ft (10 m)(2) (1)	19 ft (6 m)	10 ft (3 m)(1)	33 ft (10 m)(2) (1)
		80	10 ft (3 m)	15 ft (4.5 m)	33 ft (10 m)(2) (1)	19 ft (6 m)	10 ft (3 m)(1)	33 ft (10 m)(2) (1)
	Tank installations	1.4	9 ft (2.75 m)	9 ft (2.75 m)	9 ft (2.75 m)	19 ft (6 m)	9 ft (2.75 m)	9 ft (2.75 m)
		2	9 ft (2.75 m)	9 ft (2.75 m)	9 ft (2.75 m)	19 ft (6 m)	9 ft (2.75 m)	98 ft (30 m)(1)
		80	10 ft (3 m)(2)	10 ft (3 m)(1)	154 ft (47 m)(1)	19 ft (6 m)	10 ft (3 m)(1)	154 ft (47 m)(1)
3 m Remote Housing	Chamber / pipe installations ≤ 4 in. (100 mm)	1.4	10 ft (3 m)	15 ft (4.5 m)	33 ft (10 m)(2) (1)	19 ft (6 m)	10 ft (3 m)(1)	33 ft (10 m)(2) (1)
		2	10 ft (3 m)	15 ft (4.5 m)	33 ft (10 m)(2) (1)	19 ft (6 m)	10 ft (3 m)(1)	33 ft (10 m)(2) (1)
		80	10 ft (3 m)	15 ft (4.5 m)	33 ft (10 m)(2) (1)	19 ft (6 m)	10 ft (3 m)(1)	33 ft (10 m)(2) (1)
	Tank installations	1.4	10 ft (3 m)	14 ft (4.25 m)	14 ft (4.25 m)	19 ft (6 m)	10 ft (3 m)(1)	14 ft (4.25 m)
		2	10 ft (3 m)	14 ft (4.25 m)	14 ft (4.25 m)	19 ft (6 m)	10 ft (3 m)(1)	98 ft (30 m)(1)
		80	10 ft (3 m)	15 ft (4.5 m)(1)	149 ft (45.5 m)(1)	19 ft (6 m)	10 ft (3 m)(1)	149 ft (45.5 m)(1)

(1) Required chamber/pipe size is 3 or 4 in. (75 -100 mm).
(2) Accuracy may be affected up to ± 1.2 in. (30 mm).

A.1.4 Process temperature and pressure rating

The tank connection consists of a tank seal, a flange(1), Tri-Clamp(2) or NPT or BSP/G threads(3). See "Ordering information" on page 229).

Flange mating face dimensions follow ANSI B 16.5, JIS B2220, and EN 1092-1 standards for blind flanges. Fisher and Masoneilan flanges are also available.

Certain models of flanged Alloy and PTFE covered probes have a tank connection design with a protective plate of the same material as the probe, to prevent the 316L / EN 1.4404 SST flange from being exposed to the tank atmosphere.

The following diagrams give process temperature (maximum product temperature at the lower part of the flange) and pressure ratings for tank connections:

- Standard (Std)
- High Temperature and High Pressure (HTHP)
- High Pressure (HP)
- Cryogenic (C)

NOTE:
For standard tank connection, the final rating depends on flange and O-ring selection.

The C version can manage lower temperatures (-321 °F/-196 °C) than the Standard, HP, and HTHP versions.

Figure A-4. Maximum process temperature and pressure diagram for standard tank connections

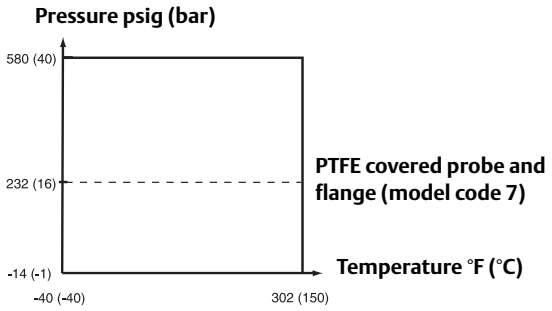

(1) *EN (DIN), ANSI, Fisher or Masoneilan.*
(2) *1.5, 2, 3 or 4 in. for Single Lead probes.*
(3) *1, 1.5, or 2 in. depending on probe type*

Figure A-5. Maximum process temperature and pressure diagram for HTHP tank connection

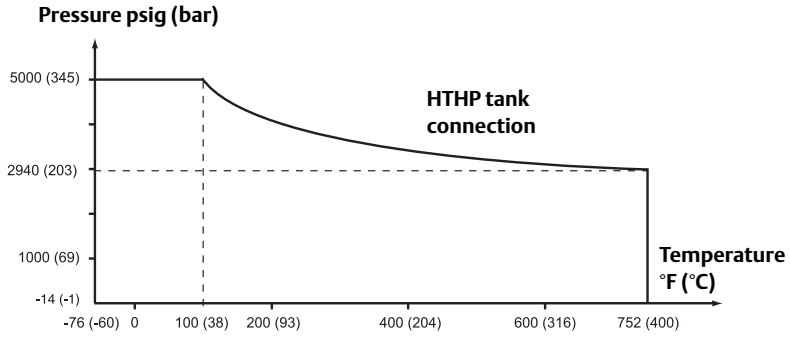

Figure A-6. Maximum process temperature and pressure diagram for HP tank connection

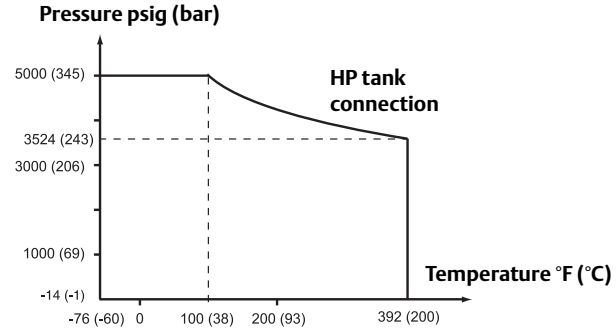

Figure A-7. Process temperature and pressure diagram for C tank connection

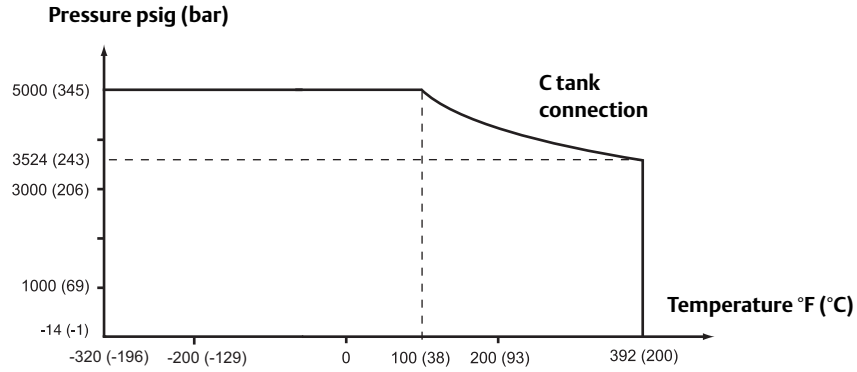

The HTHP, HP, and C versions have a ceramic tank seal, and graphite gaskets - no O-rings are used. The final rating depends on flange selection.

A difference between the HP/C and HTHP coaxial versions is material for some parts; PFA/PTFE for HP/C, and ceramics for HTHP. Ceramic spacers allow for usage in applications with higher temperature.

The following table gives the temperature ranges for tank seal with different O-ring material (applicable for the Standard Tank Connection):

Table A-3. Temperature range for different tank seal material

Tank Seal with different O-ring material	Min. Temperature °F (°C) in air	Max. Temperature °F (°C) in air
Fluoroelastomer (FKM)	5 (-15)	302 (150)
Ethylene Propylene (EPDM)	-40 (-40)	266 (130)
Perfluoroelastomer (FFKM)	14 (-10)	302 (150)
Nitrile butadiene	-31 (-35)	230 (110)

For Tri-Clamps, the maximum pressure is 16 bar for 1.5 in. (37.5 mm) and 2 in. (50 mm) housing; and 10 bar for 3 in. (75 mm) and 4 in. (100 mm) housing. The final rating depends on the clamp and gasket you are using. Tri-Clamp is available for the Standard Temperature and Pressure seal.

A.1.5 Flange connection rating

Flange strength calculations are made with the following conditions:

Table A-4. 316L SST

	Bolting material	Gasket		Flange material	Hub material
		Standard/HTHP	HP/HTHP/C		
ANSI	Stainless steel SA193 B8M C1.2	Soft (1a) with min. thickness 1.6 mm.	Spiral wound gasket with nonmetallic filler (1b)	Stainless steel A182 Gr. F316L and EN 10222-5-1.4404.	Stainless steel A479M 316L or EN 10272-1.4404.
EN	EN 1515-1/-2 group 13E0, A4-70.	Soft (EN 1514-1) with min. thickness 1.6 mm.	Spiral wound gasket with nonmetallic filler (EN 1514-2)		

Table A-5. Alloy C-276

	Bolting material	Gasket		Flange material	Hub material
		HTHP	HP/HTHP/C		
ANSI	UNS N10276	Soft (1a) with min. Thickness 1.6 mm	Spiral wound gasket with nonmetallic filler (1b)	SB462 Gr. N10276 (solution annealed condition) or SB575 Gr. N10276 (solution annealed condition)	SB574 Gr. N10276
EN		Soft (EN 1514-1) with min. Thickness 1.6 mm	Spiral wound gasket with nonmetallic filler (EN 1514-2)		

A.1.6 Flange rating standards

Calculations show that the following applies.

- ANSI:
  316L SST Flanges according to ANSI B16.5 Table 2-2.3.
  Standard: Max. 302 °F/580 psig
  (150 °C/40 Bar).
  HP/HTHP/C: Up to Class 2500.

  Alloy C-276 (UNS N10276) flanges
  according to ANSI B16.5 Table 2-3.8.
  HP: Class 1500 up to max 200 °C or
  max 100 °F/5000 psig (38°C/345 bar) and
  392 °F/3500 psig (200 °C/243 bar)
  HTHP: Class 1500 up to max 400 °C or max
  100 °F/5000 psig (38 °C/345 bar) and
  752 °F/2940 psig (400 °C/203 bar).
- EN:
  316L SST according to EN 1092-1 Table 18, material group 13E0.
  Standard: Max. 302 °F/580 psig
  (150 °C/40 Bar).
  HP/HTHP/C: Up to PN 320.

  Alloy C-276 according to EN 1092-1 table 18 material group 12E0. HP/HTHP: Up to PN320.
- Fisher & Masoneilan:
  According to ANSI B16.5 Table 2-2.3.
  Standard: Max. 302 °F/580 psig
  (150 °C/40 Bar).
  HP/HTHP/C: 32 °F/1199 psig (20 °C/82.7 Bar).
  Up to Class 600, Table 2.3.
- JIS:
  According to JIS B2220 Table 2.3
  Standard: 10K/20K/150C.
  HP/C: 10K/20K/200C.
  HTHP: 10K/20K/400C

For Alloy C-276 HTHP/HP probes with flange plate design is available up to Class 600/PN 63.

A.1.7 Ambient temperature

When the Rosemount 5300 is installed in high or low temperature applications, it is important that the maximum/minimum ambient temperature is considered. Nozzle insulation for the HTHP version should not exceed 4 in. (10 cm).

The diagram below shows the ambient temperature vs. process temperature:

Figure A-8. Ambient temperature vs. process temperature

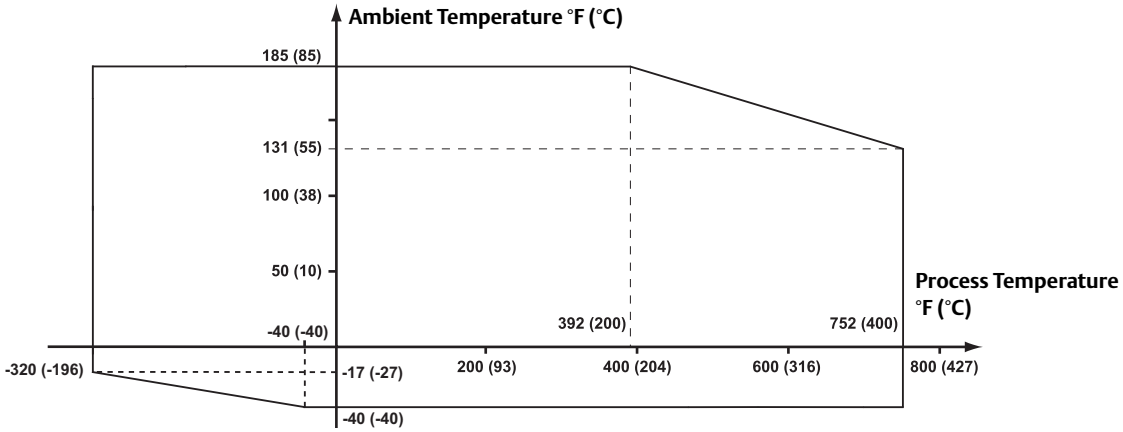

NOTE:
The maximum ambient temperature also depends on hazardous locations certifications.

A.1.8 Start-up sequence

For the Rosemount 5300, as default, the radar will first go to Low Alarm current for 9 seconds during boot-up followed by 9 seconds of High Alarm current. After that measurement is re-established and the 4-20mA output settles at the actual level value.

If a different start-up behavior is preferred, please contact your local Emerson representatives.

Figure A-9. Start-up sequence

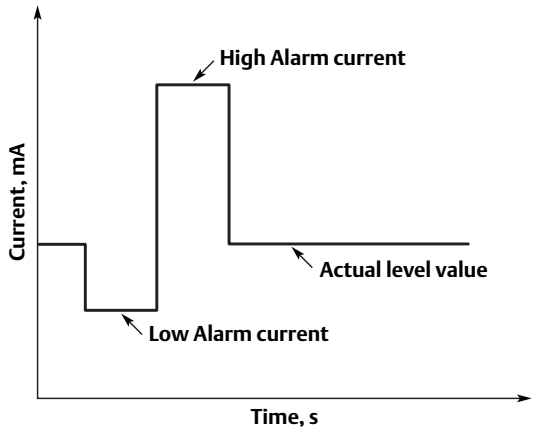

A.2 Dimensional drawings

A.2.1 Probe Type 4A, 4B

Figure A-10. Rigid Single Lead Probe with Flange Connection

Dimensions are in inches (millimeters)

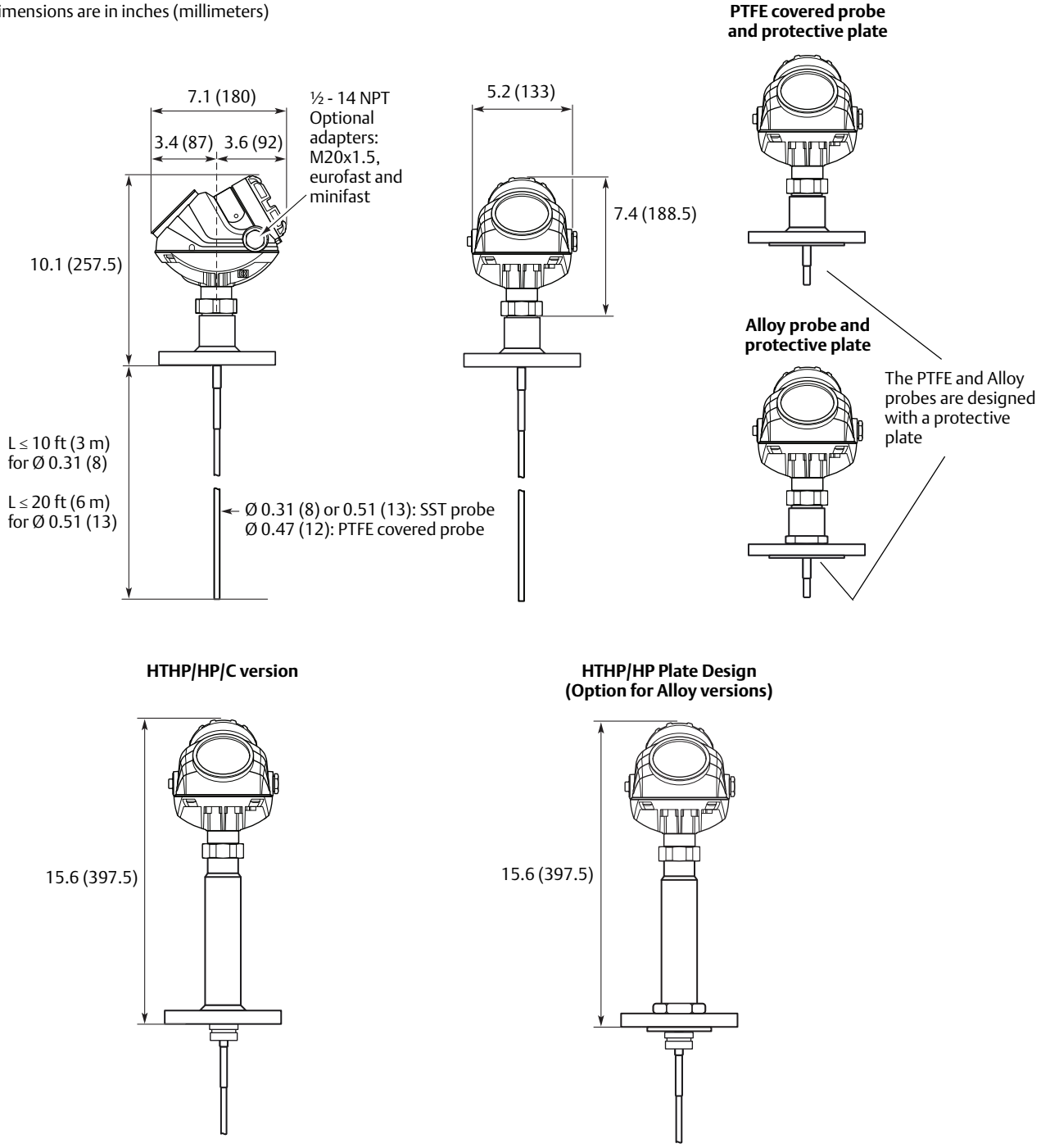

Figure A-11. Rigid Single Lead Probe with Tri-Clamp Connection

Dimensions are in inches (millimeters)

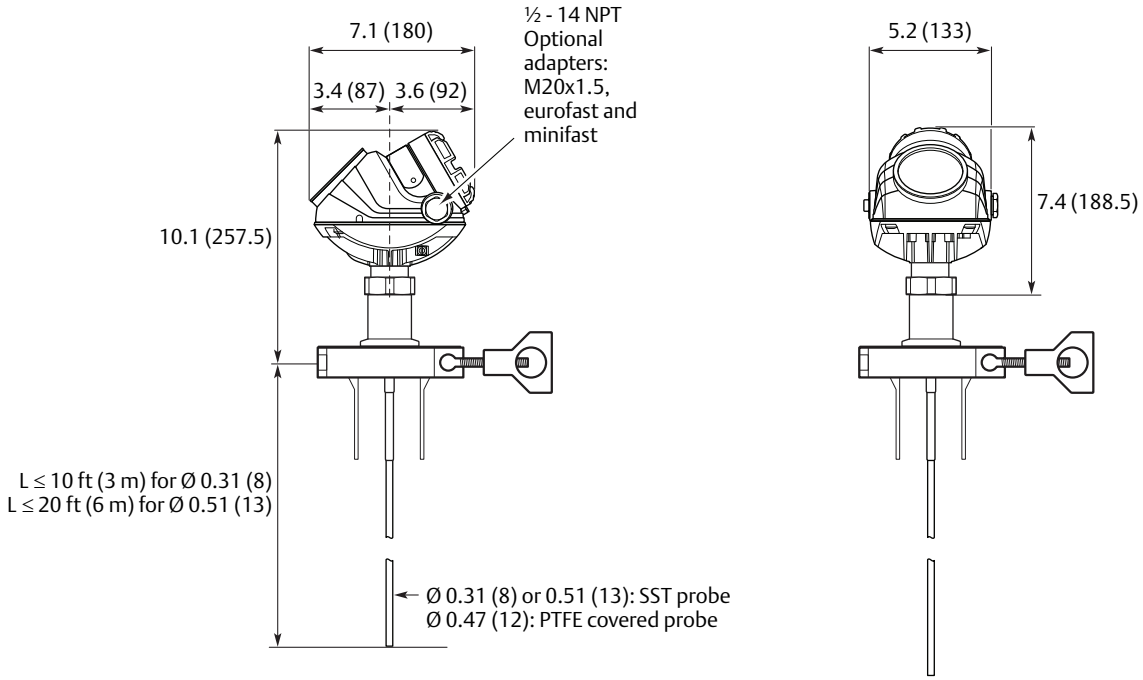

PTFE covered probe and protective plate

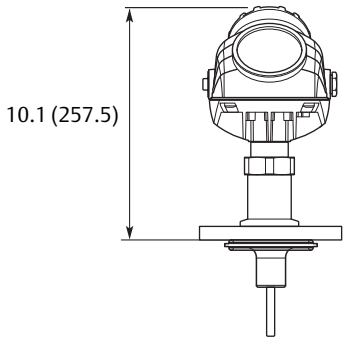

Figure A-12. Rigid Single Lead with Threaded Connection

Dimensions are in inches (millimeters)

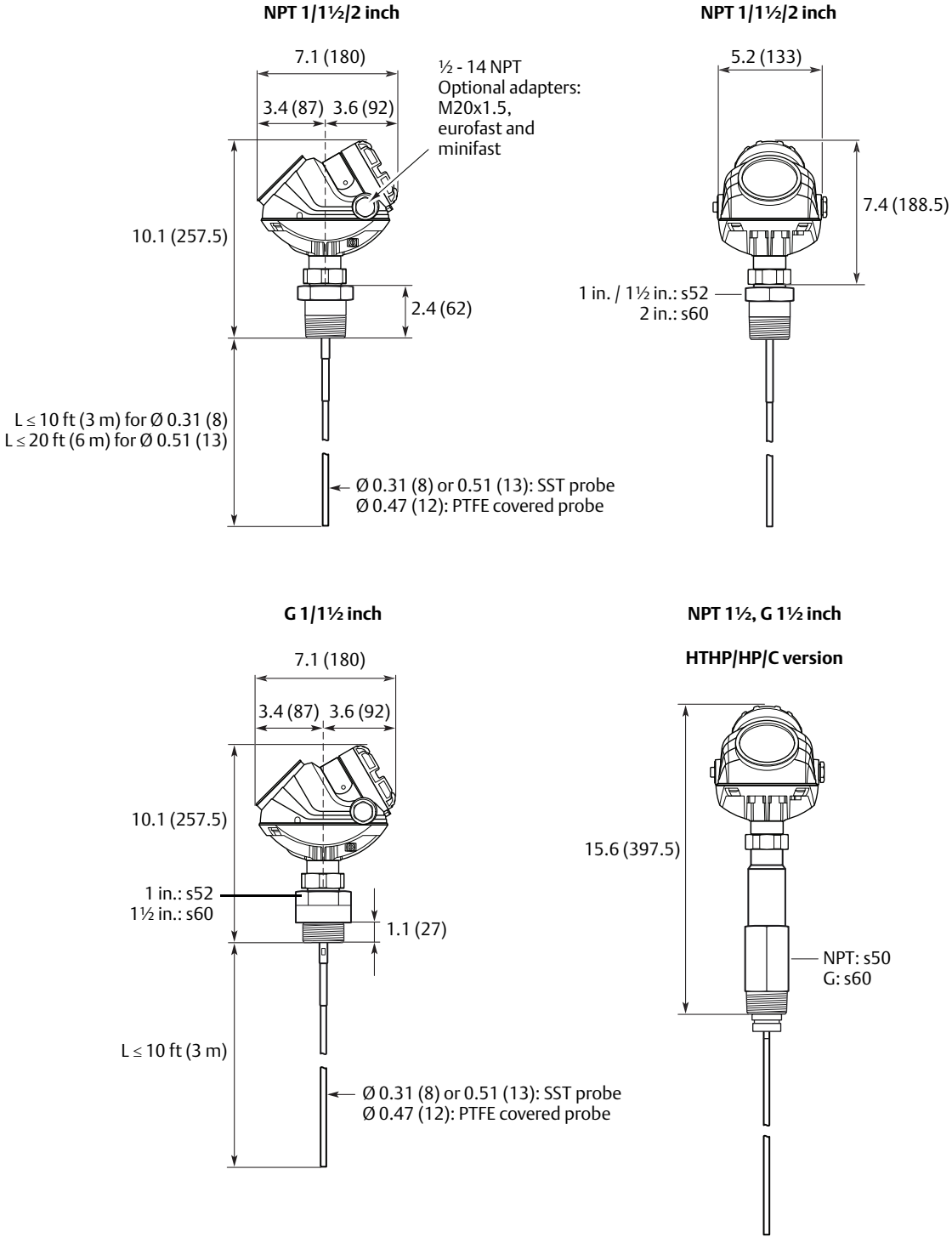

A.2.2 Probe Type 4U

Figure A-13. Single Rigid Vapor Probe for 2 in. chambers

Dimensions are in inches (millimeters)

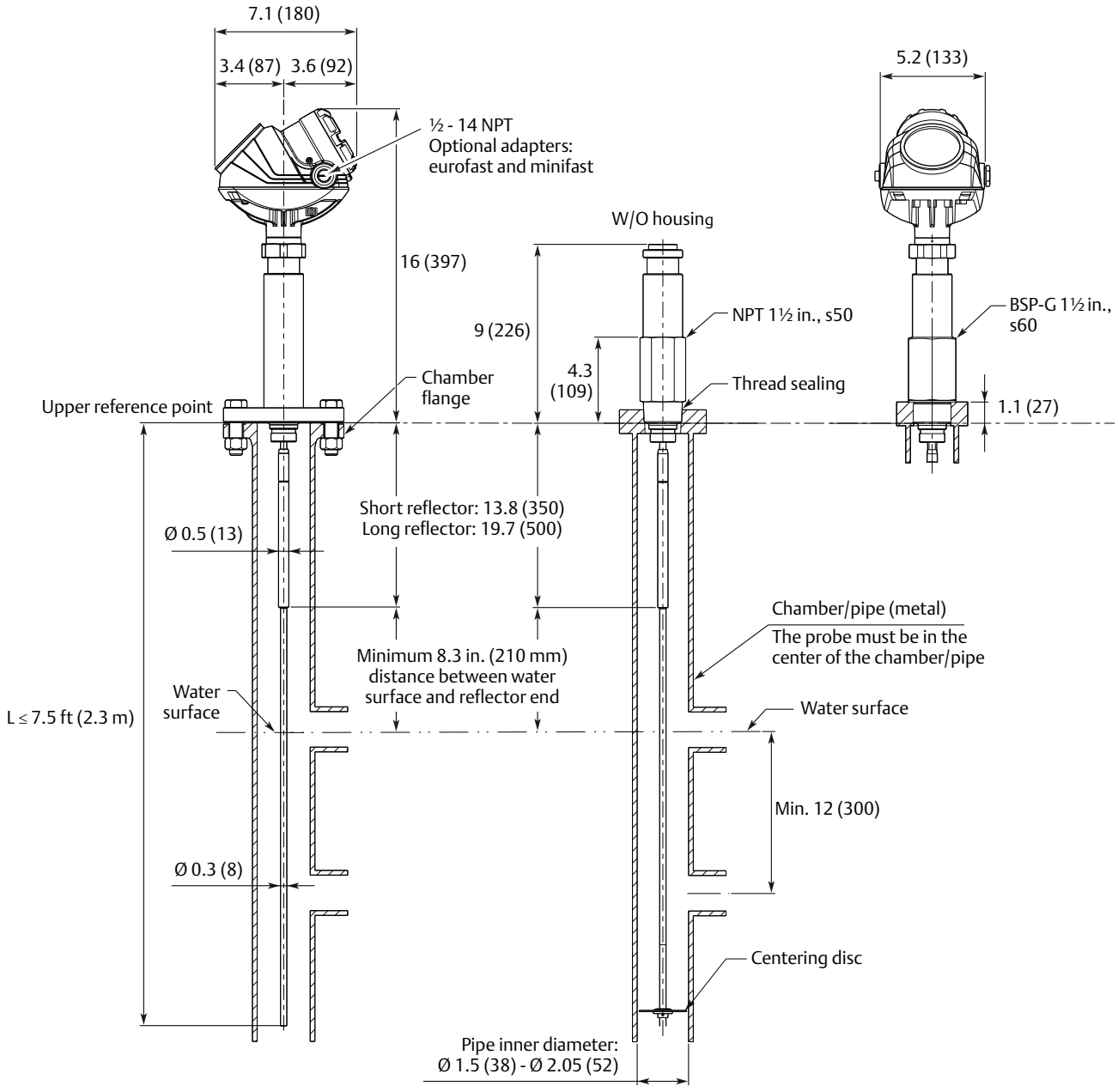

A.2.3 Probe Type 5A, 5B

Figure A-14. Flexible Single Lead Probe with Flange Connection

Dimensions are in inches (millimeters)

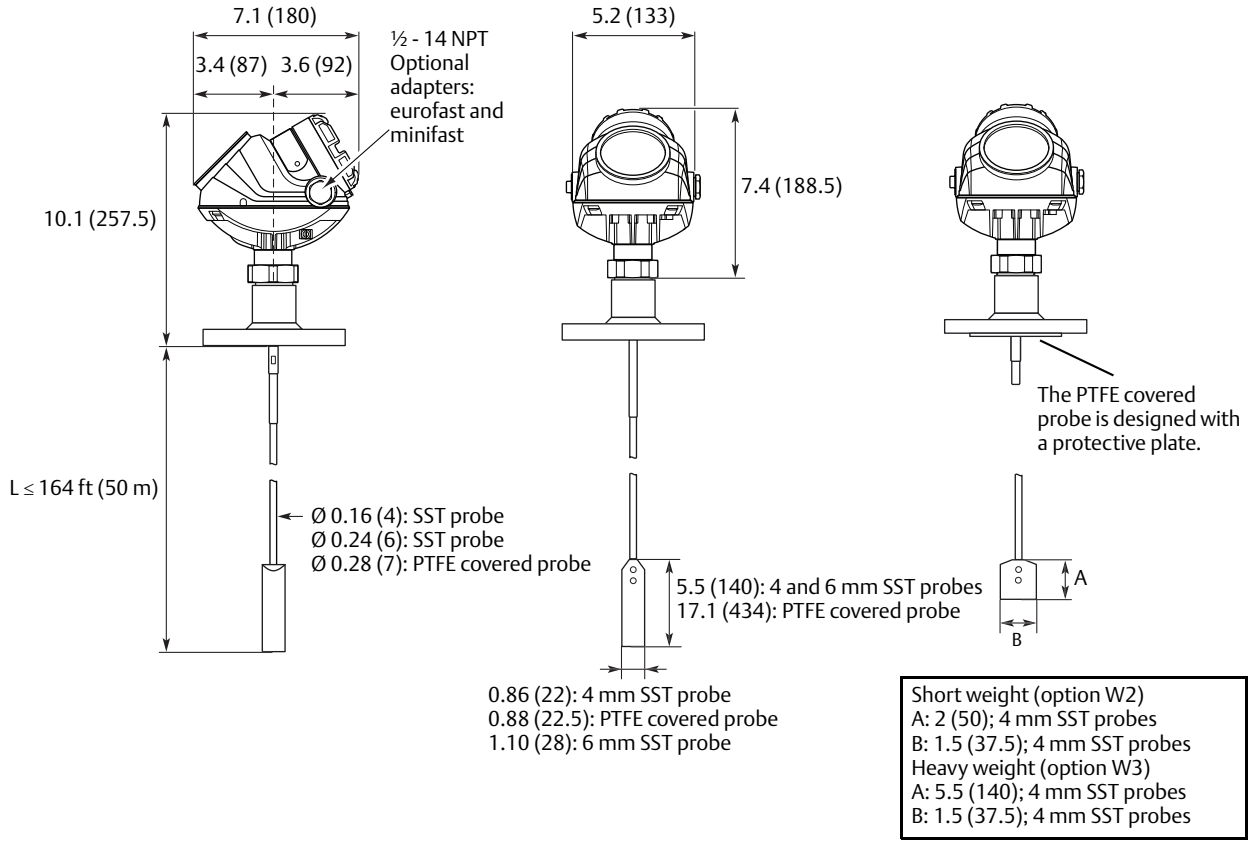

HTHP/HP/C version

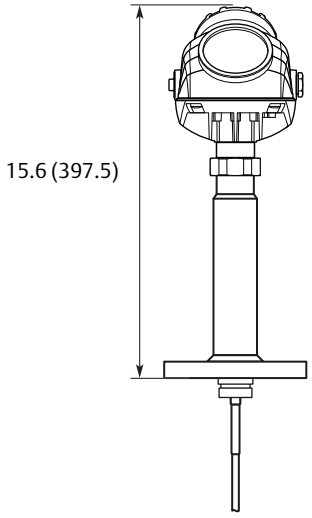

HTHP/HP/C Plate Design
(Option for Alloy versions)

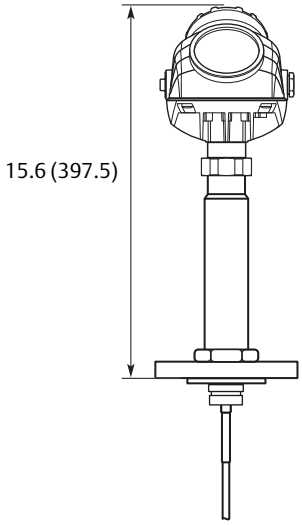

Figure A-15. Flexible Single Lead Probe with Tri-Clamp Connection

Dimensions are in inches (millimeters)

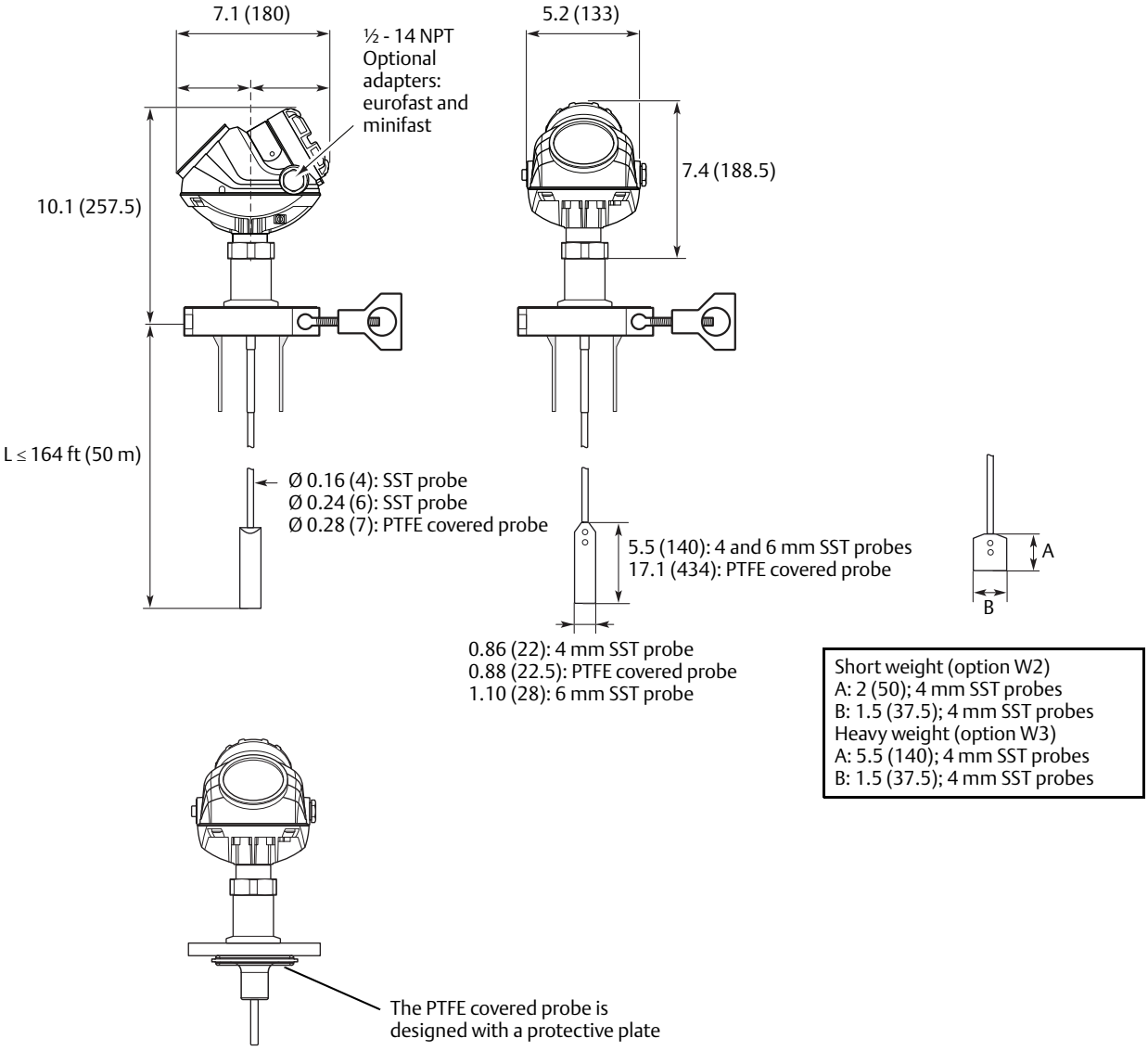

Figure A-16. Flexible Single Lead with Threaded Connection

Dimensions are in inches (millimeters)

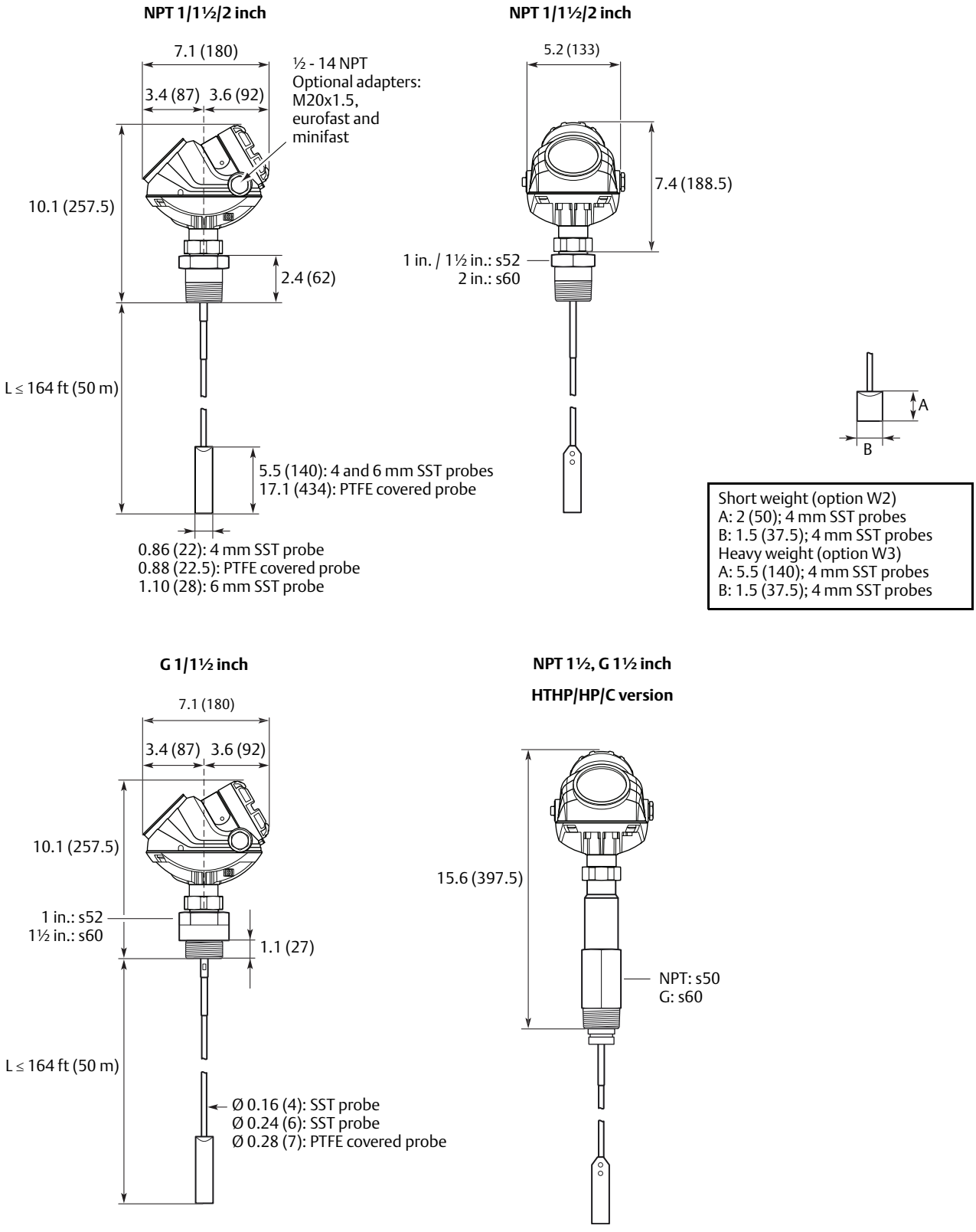

A.2.4 Probe Type 3A, 3B

Figure A-17. Coaxial probe with Flange Connection

Dimensions are in inches (millimeters)

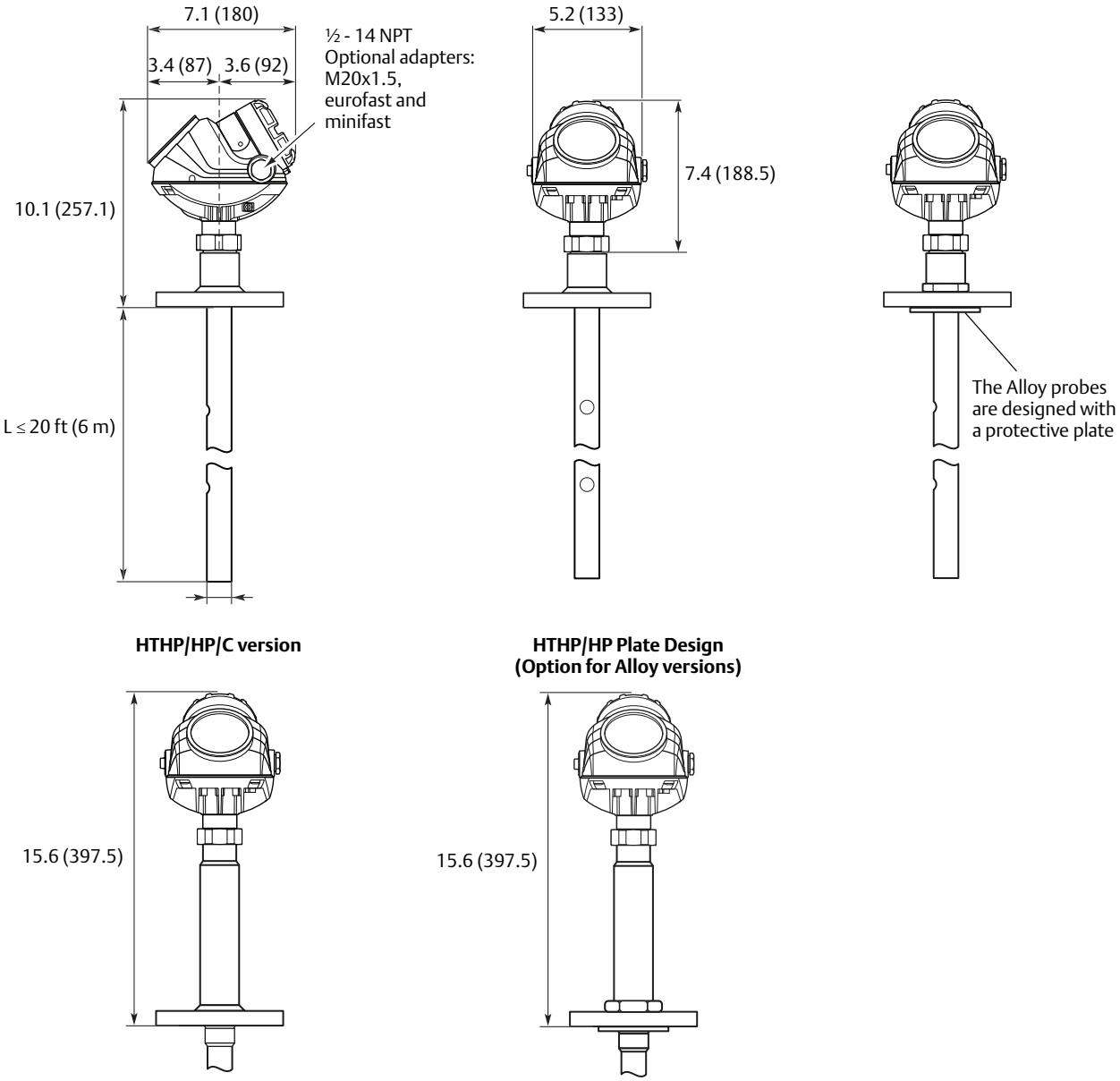

Figure A-18. Coaxial Probe with Threaded Connection

Dimensions are in inches (millimeters)

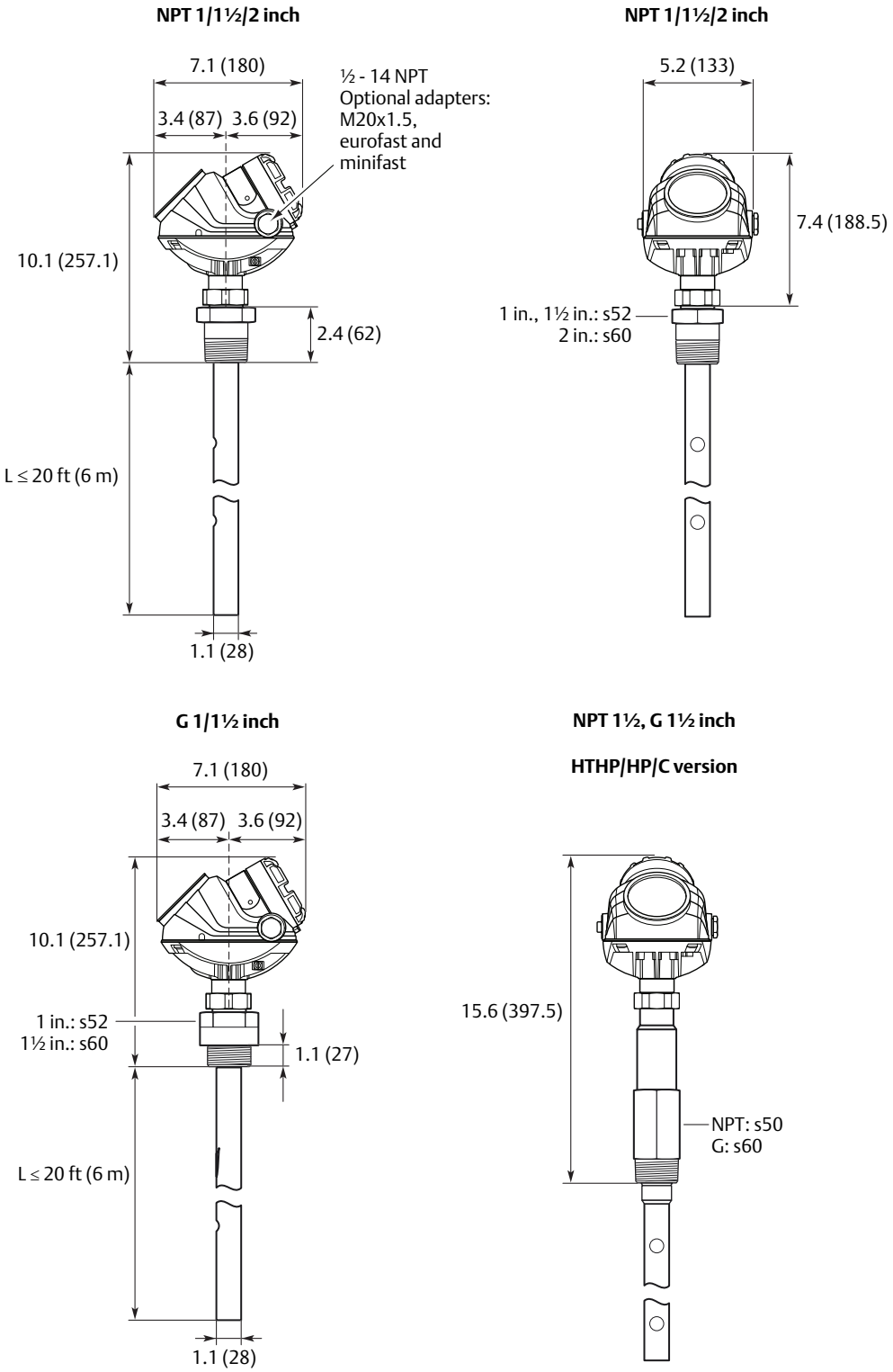

A.2.5 Probe type 3V

Figure A-19. Integrated Still Pipe Vapor Probe for 3 in. chambers and above

Dimensions are in inches (millimeters)

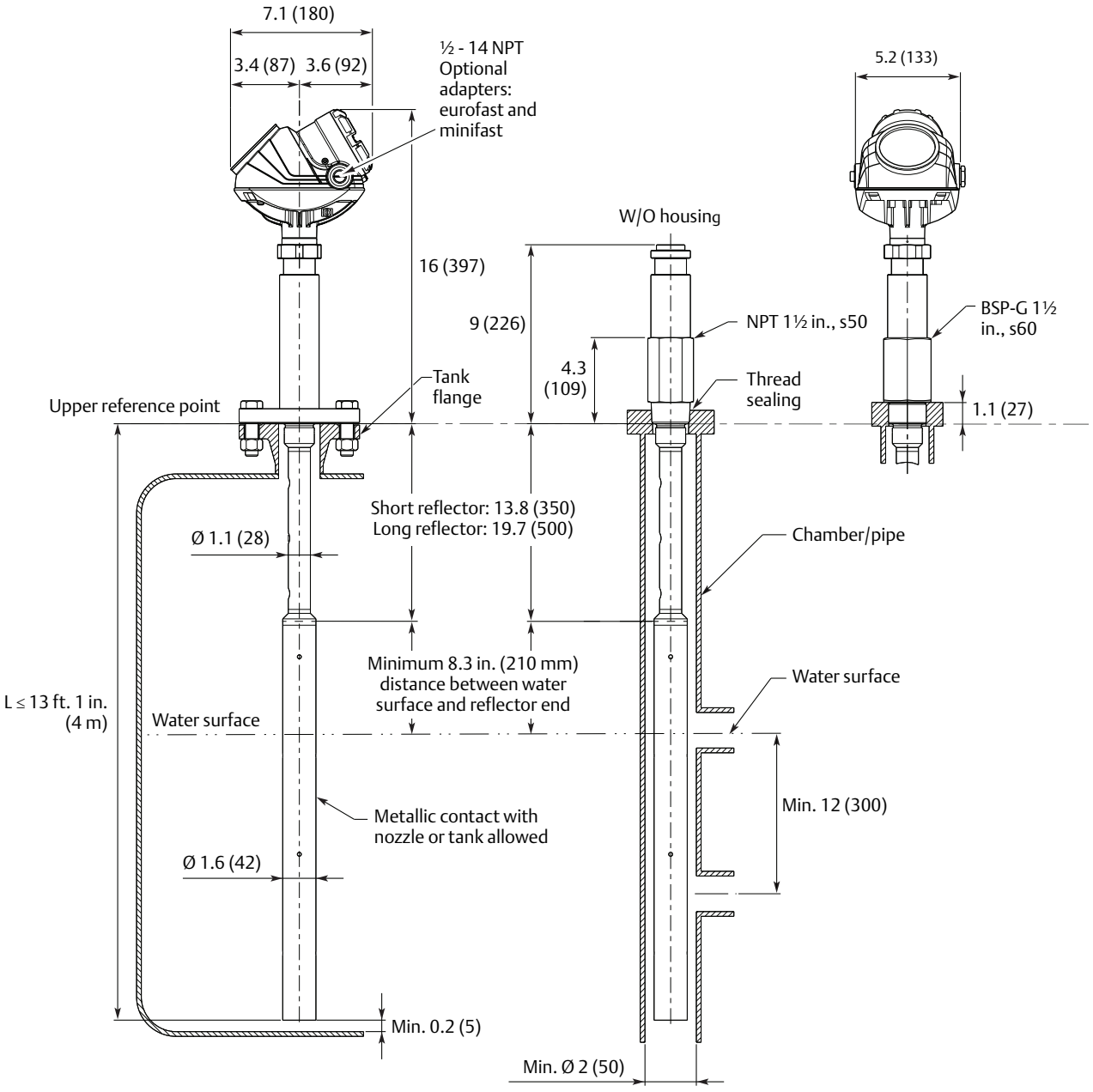

A.2.6 Probe Type 1A

Figure A-20. Rigid Twin Lead Probe

Dimensions are in inches (millimeters)

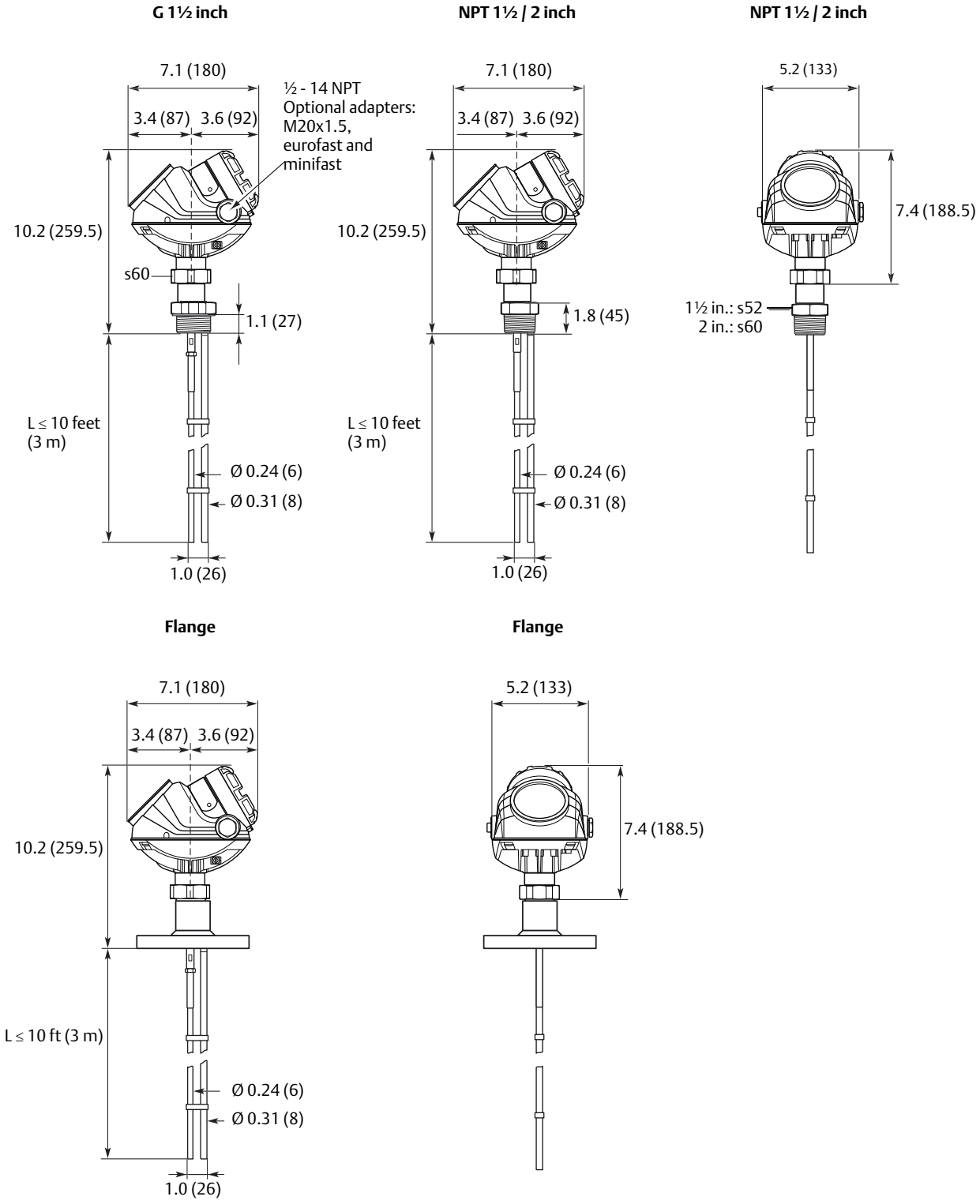

A.2.7 Probe Type 2A

Figure A-21. Flexible Twin Lead

Dimensions are in inches (millimeters)

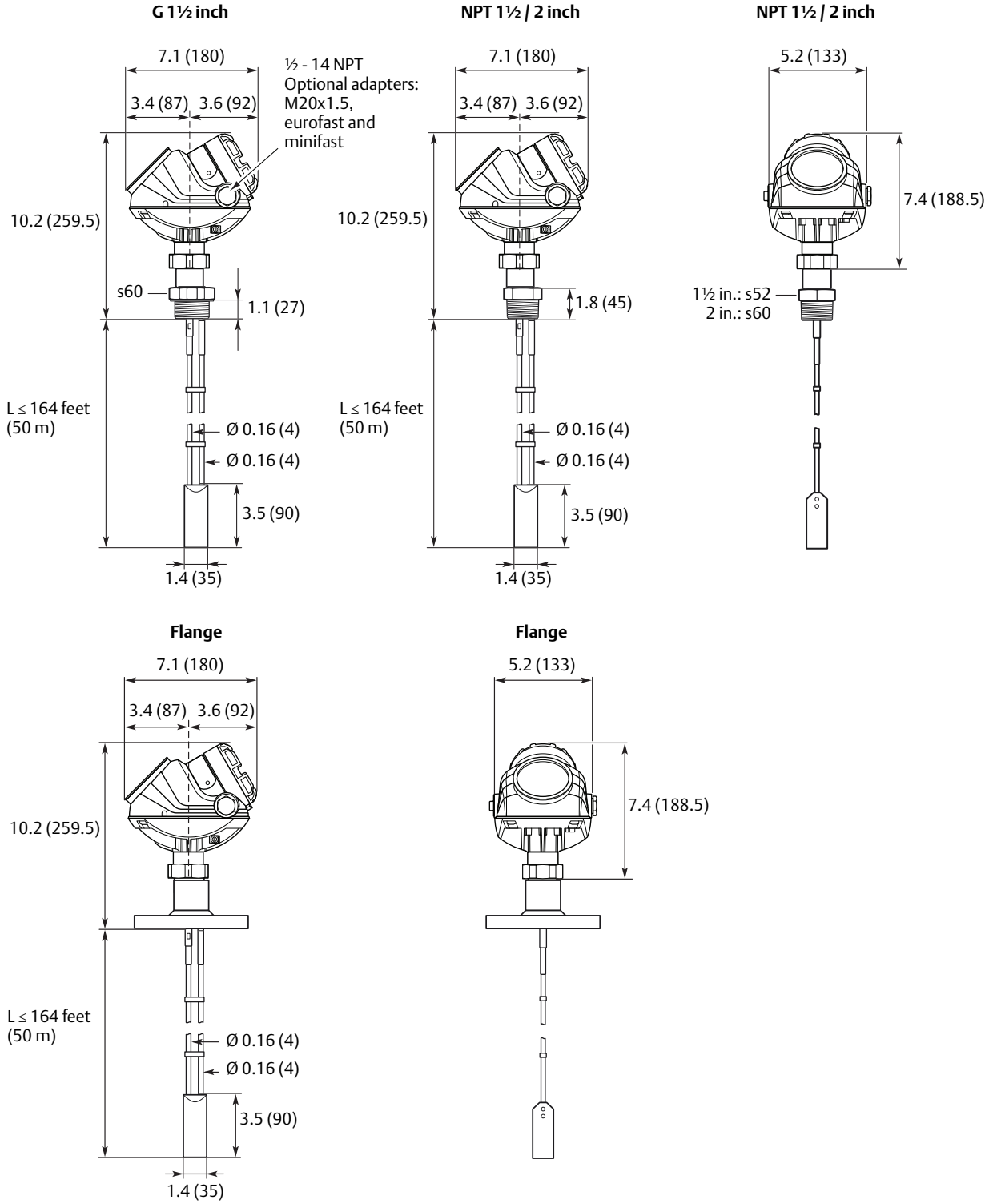

A.2.8 Bracket mounting (option code BR)

Figure A-22. Bracket mounting (option code BR)

Dimensions are in inches (millimeters)

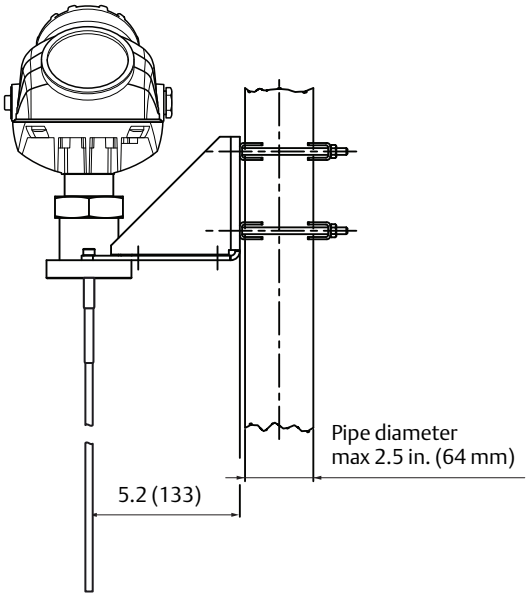

Pipe mounting
(vertical pipe)

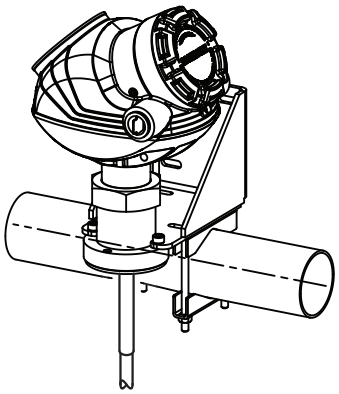

Pipe mounting
(horizontal pipe)

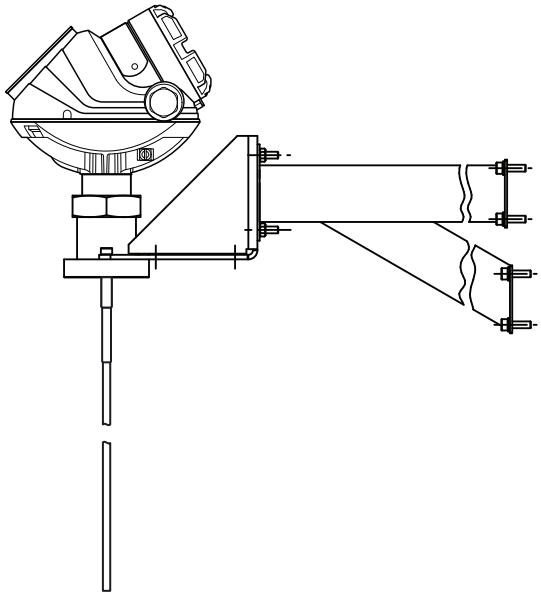

Wall mounting

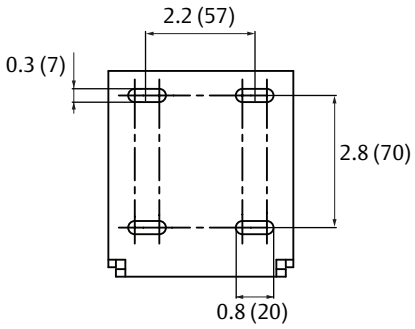

Hole pattern
wall mounting

A.2.9 Remote housing (option code B1, B2, B3)

Figure A-23. Remote housing (option code B1, B2, B3)

Dimensions are in inches (millimeters)

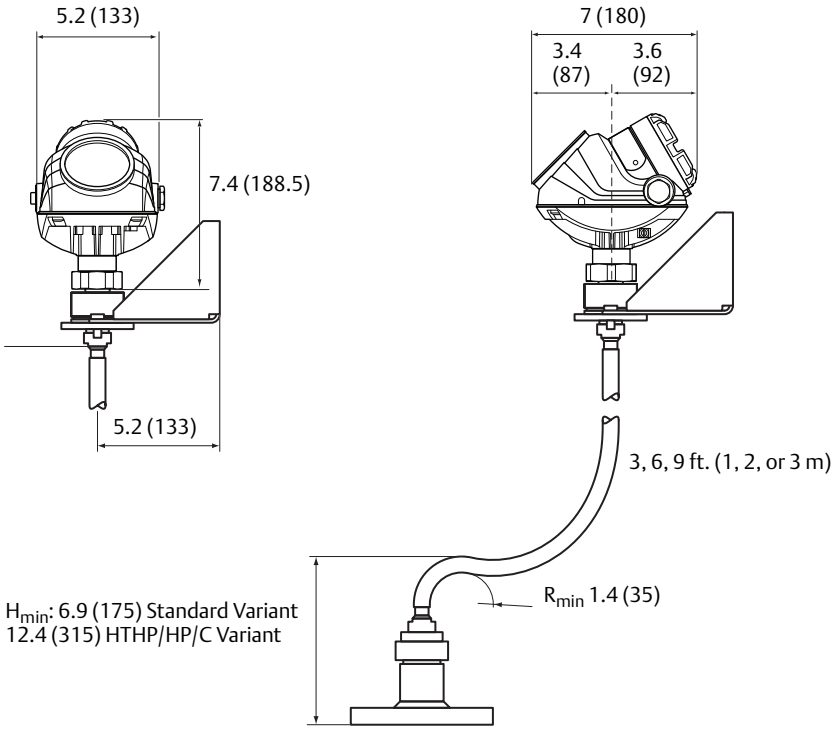

A.3 Ordering information

Table A-6. Rosemount 5301 and 5302 Level and/or Interface in Liquids Ordering Information

The starred options (★) represent the most common options and should be selected for best delivery. The non-starred offerings are subject to additional delivery lead time.

	Model	Product Description		
★	5301	Guided Wave Radar Liquid Level or Interface Transmitter (interface available for fully submerged probe)		
★	5302	Guided Wave Radar Liquid Level and Interface Transmitter		
	Signal Output			
★	H	4-20 mA with HART communication (HART 5)[1]		
★	F	FOUNDATION fieldbus		
★	M	RS-485 with Modbus communication		
	U	Rosemount 2410 Tank Hub Connectivity (Pending, consult factory for details)		
	Housing Material			
★	A	Polyurethane-covered Aluminum		
	S	Stainless Steel, Grade CF8M (ASTM A743)		
	Conduit / Cable Threads			
★	1	½ - 14 NPT		
★	2	M20 x 1.5 adapter		
★	E	M12, 4-pin, Male connector (eurofast®)[2]		
★	M	A size Mini, 4-pin, Male connector (minifast®)[2]		
	Operating Temperature and Pressure[3]			**Probe Type**
★	S	- 15 psig (-1bar) to 580 psig (40 bar) @ 302 °F (150 °C)		1A, 2A, 3A, 3B, 4A, 4B, 5A, and 5B
★	H	High Temperature / High Pressure[4]: 2940 psi @ 752 °F and 5000 psi @ 100 °F (203 bar @ 400 °C and 345 bar @ 38 °C)		3A, 3B, 3V, 4A, 4U, 5A, and 5B
★	P	High Pressure[4]: Max 392 °F (200 °C): 3500 psi @ 392 °F and 5000 psi @ 100 °F (243 bar @ 200 °C and 345 bar @ 38 °C)		3A, 3B, 4A, 5A, and 5B
	C	Cryogenic Temperature[4] [5] -321 °F (-196 °C) Max 392 °F (200 °C): 3500 psi @ 392 °F and 5000 psi @ 100 °F (243 bar @ 200 °C and 345 bar @ 38 °C)		3A, 3B, 4A, 5A, 5B (only SST)
	Material of Construction[6]: Process Connection / Probe		**Probe Type**	**Valid Operation Temperature and Pressure**
★	1	316 L SST (EN 1.4404)	All	S, H, P, C
	2	Alloy C-276 (UNS N10276). With plate design if flanged version. Up to class 600, PN 63 for HTHP/HP probes.	3A, 3B, 4A	S, H, P
	3	Alloy 400 (UNS N04400). With plate design if flanged version.	3A, 3B, 4A, 5A, 5B	S
	7	PTFE covered probe and flange. With plate design.	4A and 5A	S

The starred options (★) represent the most common options and should be selected for best delivery. The non-starred offerings are subject to additional delivery lead time.

	8	PTFE covered probe	4A and 5A	S
	H	Alloy C-276 (UNS N10276) process connection, flange and probe[7]	3A, 3B, 4A	H, P
	D	Alloy 2205 process connection, flange and probe	4B	S, H, P
	Sealing, O-ring Material (Consult the factory for other o-ring materials)			
★	N	None[8]		
★	V	Fluoroelastomer (FKM)		
★	E	Ethylene Propylene		
★	K	Kalrez® 6375 perfluoroelastomer		
★	B	Nitrile butadiene		
	Probe Type		**Process Connection**	**Probe Lengths**
★	3B	Coaxial, perforated. For level and interface measurement, or easier cleaning.	Flange / 1 in,[13] 1.5 in., 2 in.[13] Thread	Min: 1 ft 4 in. (0.4 m) Max: 19 ft 8 in. (6 m)
★	4A	Rigid Single Lead (8 mm)	Flange / 1 in.[13], 1.5 in., 2 in.[13] Thread / Tri-Clamp	Min: 1 ft 4 in. (0.4 m) Max: 9 ft 10 in. (3 m)
★	4B	Rigid Single Lead (13 mm)[9]	Flange / 1 in., 1.5 in., 2 in. Thread / Tri-Clamp	Min: 1 ft 4 in. (0.4 m) Max: 19 ft 8 in. (6 m)
★	5A	Flexible Single Lead with weight[10]	Flange / 1 in.[13], 1.5 in., 2 in.[13] Thread / Tri-Clamp	Min: 3 ft 4 in. (1 m) Max: 164 ft (50 m)
★	5B	Flexible Single Lead with chuck[11]	Flange / 1 in.[13], 1.5 in., 2 in.[13] Thread / Tri-Clamp	Min: 3 ft 4 in. (1 m) Max: 164 ft (50 m)
	1A	Rigid Twin Lead[13]	Flange / 1.5 in., 2 in.[13] Thread	Min: 1 ft 4 in. (0.4 m) Max: 9 ft 10 in. (3 m)
	2A	Flexible Twin Lead with weight [13]	Flange / 1.5 in., 2 in.[13] Thread	Min: 3 ft 4 in. (1 m) Max: 164 ft (50 m)
	3A	Coaxial (for level measurement)[12]	Flange / 1 in.[13], 1.5 in., 2 in.[13] Thread	Min: 1 ft 4 in. (0.4 m) Max: 19 ft 8 in. (6 m)
	3V	Integrated Still Pipe Vapor Probe. For 3 in. chambers and above.[14] Refer to page 236 to specify reference reflector length.	Flange / 1.5 in. Thread	Min: 2 ft 11 in. (0.9 m) for the short reflector (R1 option) Min: 3 ft 7 in. (1.1 m) for the long reflector (R2 option) Max: 13 ft 1 in. (4 m)
	4U	Single Rigid Vapor Probe. For 2 in. chambers.[14] Refer to page 236 to specify reference reflector length.	Flange / 1.5 in. Thread	Min: 2 ft 11 in. (0.9 m) for the short reflector (R1 option) Min: 3 ft 7 in. (1.1 m) for the long reflector (R2 option) Max: 7.5 ft (2.3 m)
	Probe Length Units			
★	E	English (feet, in.)		
★	M	Metric (meters, centimeters)		
	Total Probe Length [15] (feet/m)			
★	XXX	0-164 ft or 0-50 m		

The starred options (★) represent the most common options and should be selected for best delivery. The non-starred offerings are subject to additional delivery lead time.

	Total Probe Length [15] (in./cm)		
★	XX	0-11 in. or 0-99 cm	
	Process Connection - Size / Type (consult factory for other process connections)		
	ASME / ANSI Flanges[16] [17]		**Operating Temperature and Pressure**
★	AA	2 in., 150 lb	S, H, P, C
★	AB	2 in., 300 lb	S, H, P, C
★	AC	2 in., 600 lb	H, P, C
★	AD	2 in., 900 lb	H, P, C
★	BA	3 in., 150 lb	S, H, P, C
★	BB	3 in., 300 lb	S, H, P, C
★	BC	3 in., 600 lb	H, P, C
★	BD	3 in., 900 lb	H, P, C
★	CA	4 in., 150 lb	S, H, P, C
★	CB	4 in., 300 lb	S, H, P, C
★	CC	4 in., 600 lb	H, P, C
★	CD	4 in., 900 lb	H, P, C
	AE	2 in., 1500 lb	H, P, C
	AI	2 in., 600 lb, RTJ (Ring Type Joint)	H, P, C
	AJ	2 in., 900 lb, RTJ (Ring Type Joint)	H, P, C
	AK	2 in., 1500 lb, RTJ (Ring Type Joint)	H, P, C
	BE	3 in., 1500 lb. HTHP / HP units	H, P, C
	BI	3 in., 600 lb, RTJ (Ring Type Joint)	H, P, C
	BJ	3 in., 900 lb, RTJ (Ring Type Joint)	H, P, C
	BK	3 in., 1500 lb, RTJ (Ring Type Joint)	H, P, C
	CE	4 in., 1500 lb	H, P, C
	CI	4 in., 600 lb, RTJ (Ring Type Joint)	H, P, C
	CJ	4 in., 900 lb, RTJ (Ring Type Joint)	H, P, C
	CK	4 in., 1500 lb, RTJ (Ring Type Joint)	H, P, C
	DA	6 in., 150 lb	S, H, P, C
	EN (DIN) Flanges[18] [19]		**Operating Temperature and Pressure**
★	HB	DN50, PN40	S, H, P, C
★	HC	DN50, PN63	H, P, C
★	HD	DN50, PN100	H, P, C
★	IA	DN80, PN16	S, H, P, C
★	IB	DN80, PN40	S, H, P, C
★	IC	DN80, PN63	H, P, C
★	ID	DN80, PN100	H, P, C

The starred options (★) represent the most common options and should be selected for best delivery. The non-starred offerings are subject to additional delivery lead time.

★	JA	DN100, PN16	S, H, P, C
★	JB	DN100, PN40	S, H, P, C
★	JC	DN100, PN63	H, P, C
★	JD	DN100, PN100	H, P, C
	HE	DN50, PN160	H, P, C
	HF	DN50, PN250	H, P, C
	HI	DN50, PN40, EN 1092-1 Type E spigot face (DIN 2513 Form V13)	S, H, P, C
	HP	DN50, PN16, EN 1092-1 Type C tongue face (DIN 2512 Form F)	S, H, P, C
	HQ	DN50, PN40, EN 1092-1 Type C tongue face (DIN 2512 Form F)	S, H, P, C
	IE	DN80, PN160	H, P, C
	IF	DN80, PN250	H, P, C
	IH	DN80, PN16, EN 1092-1 Type E spigot face (DIN 2513 Form V13)	S, H, P, C
	II	DN80, PN40, EN 1092-1 Type E spigot face (DIN 2513 Form V13)	S, H, P, C
	IP	DN80, PN16, EN 1092-1 Type C tongue face (DIN 2512 Form F)	S, H, P, C
	IQ	DN80, PN40, EN 1092-1 Type C tongue face (DIN 2512 Form F)	S, H, P, C
	JE	DN100, PN160	H, P, C
	JF	DN100, PN250	H, P, C
	JH	DN100, PN16, EN 1092-1 Type E spigot face (DIN 2513 Form V13)	S, H, P, C
	JI	DN100, PN40, Type E spigot face (DIN 2513 Form V13)	S, H, P, C
	JP	DN100, PN16, EN 1092-1 Type C tongue face (DIN 2512 Form F)	S, H, P, C
	JQ	DN100, PN40, EN 1092-1 Type C tongue face (DIN 2512 Form F)	S, H, P, C
	KA	DN150, PN16	S, H, P, C
	JIS Flanges[18] **(20)**		**Operating Temperature and Pressure**
★	UA	50A, 10K	S, H, P, C
★	VA	80A, 10K	S, H, P, C
★	XA	100A, 10K	S, H, P, C
	UB	50A, 20K	S, H, P, C
	VB	80A, 20K	S, H, P, C
	XB	100A, 20K	S, H, P, C
	YA	150A, 10K	S, H, P, C
	YB	150A, 20K	S, H, P, C
	ZA	200A, 10K	S, H, P, C
	ZB	200A, 20K	S, H, P, C
	Threaded Connections[16]		**Probe Type**
★	RA	1 ½ in. NPT thread	All
★	RC	2 in. NPT thread	1A, 2A, 3A, 3B, 4A, 4B, 5A, 5B, standard temperature and pressure

The starred options (★) represent the most common options and should be selected for best delivery. The non-starred offerings are subject to additional delivery lead time.

	RB	1 in. NPT thread	3A, 3B, 4A, 4B, 5A, 5B, standard temperature and pressure
	SA	1 ½ in. BSP (G 1 ½ in.) thread	All
	SB	1 in. BSP (G 1 in.) thread	3A, 3B, 4A, 4B, 5A, 5B, standard temperature and pressure
	Tri-Clamp Fittings		**Probe Type**
	FT	1 ½ in. Tri-Clamp	4A, 5A, 5B standard temperature and pressure
	AT	2 in. Tri-Clamp	4A, 4B, 5A, 5B standard temperature and pressure
	BT	3 in. Tri-Clamp	4A, 4B, 5A, 5B standard temperature and pressure
	CT	4 in. Tri-Clamp	4A, 4B, 5A, 5B standard temperature and pressure
	Proprietary Flanges		
★	TF	Fisher - proprietary 316L SST (for 249B, 259B chambers) Torque Tube Flange	
★	TT	Fisher - proprietary 316L SST (for 249C chambers) Torque Tube Flange	
★	TM	Masoneilan - proprietary 316L SST Torque Tube Flange	
	Hazardous Locations Certifications		
★	NA	No Hazardous Locations Certifications	
★	E1	ATEX Flameproof[21]	
★	E3	NEPSI Flameproof[21]	
★	E5	FM Explosion-proof[21]	
★	E6	CSA Explosion-proof[21]	
★	E7	IECEx Flameproof[21]	
★	I1	ATEX Intrinsic Safety	
★	IA	ATEX FISCO Intrinsic Safety[22]	
★	I3	NEPSI Intrinsic Safety	
★	IC	NEPSI FISCO Intrinsic Safety[22]	
★	I5	FM Intrinsic Safety and Non-Incendive	
★	IE	FM FISCO Intrinsic Safety[22]	
★	I6	CSA Intrinsic Safety	
★	IF	CSA FISCO Intrinsic Safety[22]	
★	I7	IECEx Intrinsic Safety	
★	IG	IECEx FISCO Intrinsic Safety[22]	
	E2	INMETRO Flameproof	
	I2	INMETRO Intrinsic Safety	
	IB	INMETRO FISCO Intrinsic Safety	
	E4	TIIS Flameproof	

The starred options (★) represent the most common options and should be selected for best delivery. The non-starred offerings are subject to additional delivery lead time.

	KA	ATEX, FM, CSA Flameproof/Explosion-proof[21]
	KB	ATEX, FM, IECEx Flameproof/Explosion-proof[21]
	KC	ATEX, CSA, IECEx Flameproof/Explosion-proof[21]
	KD	FM, CSA, IECEx Flameproof/Explosion-proof[21]
	KE	ATEX, FM, CSA Intrinsic Safety
	KF	ATEX, FM, IECEx Intrinsic Safety
	KG	ATEX, CSA, IECEx Intrinsic Safety
	KH	FM, CSA, IECEx Intrinsic Safety
	KI	FISCO - ATEX, FM, CSA Intrinsic Safety[22]
	KJ	FISCO - ATEX, FM, IECEx Intrinsic Safety[22]
	KK	FISCO - ATEX, CSA, IECEx Intrinsic Safety[22]
	KL	FISCO - FM, CSA, IECEx Intrinsic Safety[22]
	N1	ATEX Type n (Pending, consult factory for details)
	N7	IECEx Type n (Pending, consult factory for details)
	Options	
	Display	
★	M1	Integral digital display
	Communications	
★	HR7	4-20 mA with digital signal based on HART 7 protocol. Only available with HART 4-20 mA output (output code H). (Pending, consult factory for details.)
	Hydrostatic Testing	
★	P1	Hydrostatic testing[23]
	Materials Certification	
★	N2	NACE material recommendation per ANSI/NACE MR0175/ISO 15156 and MR-0103[24]
	Transient Protection	
★	T1	Transient Protection Terminal Block (standard with FISCO options)
	Installation Options	
★	LS	Long stud[25] 9.8 in (250 mm) for flexible single lead probe to prevent contact with wall/nozzle. Standard length is 3.9 in (100 mm) for probes 5A and 5B.
	BR	Mounting Bracket for 1.5 in. NPT Process Connection (RA)
	Weight and Anchoring options for Flexible Single Probes (Probe Type 5A)	
★	W3	Heavy weight (recommended choice for most applications) Weight=2.2 lb (1 kg), Length=5.5 in. (140 mm), Diameter=1.5 in. (37.5 mm)
	W2	Short weight (when measuring close to the probe end)[26] Weight=0.79 lb (0.36 kg). Length=2 in. (50 mm), Diameter=1.5 in. (37.5 mm)
	Special Configuration (Software)	
★	C1	Factory configuration (Configuration Data Sheet required with order, available at www.rosemount.com)
★	C4	Namur alarm and saturation levels, high alarm
★	C5	Namur alarm and saturation levels, low alarm
★	C8	Low alarm [27] (standard Rosemount alarm and saturation levels)

The starred options (★) represent the most common options and should be selected for best delivery. The non-starred offerings are subject to additional delivery lead time.

	Special Certifications		
★	Q4	Calibration Data Certification	
★	Q8	Material Traceability Certification per EN 10204 3.1[28]	
★	QS	Prior-use certificate of FMEDA Data. Only available with HART 4-20 mA output (output code H).	
★	QT	Safety-certified to IEC 61508 with certificate of FMEDA data. Only available with HART 4-20 mA output (output code H).	
	U1	WHG Overfill Approval[29]. Only available with HART 4-20 mA output (output code H)	
	QG	GOST Primary Verification Certificate	
	Q66	Welding Procedure Qualification Record Documentation	
	Shipboard Approvals[30]		
	SBS	American Bureau of Shipping Type Approval (Pending, consult factory for details)	
	SDN	Welding Procedure Qualification Record Documentation	
	SLL	Lloyd's Register Type Approval (Pending, consult factory for details)	
	SBV	Bureau Veritas Type Approval (Pending, consult factory for details)	
	SRS	Russian Maritime Register of Shipping Type Approval (Pending, consult factory for details)	
	SGL	Germanischer Lloyd Type Approval (Pending, consult factory for details)	
	Diagnostic Functionality		
★	D01	FOUNDATION fieldbus Diagnostics Suite (includes Signal Quality Metrics diagnostics)	
★	DA1	HART Diagnostics Suite (includes Signal Quality Metrics diagnostics)	
	Centering Discs		**Outer Diameter**
★	S2	2 in. Centering disc[31]	1.8 in. (45 mm)
★	S3	3 in. Centering disc[31]	2.7 in. (68 mm)
★	S4	4 in. Centering disc[31]	3.6 in. (92 mm)
★	P2	2 in. Centering disc PTFE[32]	1.8 in. (45 mm)
★	P3	3 in. Centering disc PTFE[32]	2.7 in. (68 mm)
★	P4	4 in. Centering disc PTFE[32]	3.6 in. (92 mm)
	S6	6 in. Centering disc[31]	5.55 in. (141 mm)
	S8	8 in. Centering disc[31]	7.40 in. (188 mm)
	P6	6 in. Centering disc PTFE[32]	5.55 in. (141 mm)
	P8	8 in. Centering disc PTFE[32]	7.40 in. (188 mm)
	Remote Housing Mounting		
	B1	1 m / 3.2 ft. Remote Housing Mounting Cable and Bracket	
	B2	2 m / 6.5 ft. Remote Housing Mounting Cable and Bracket	
	B3	3 m / 9.8 ft. Remote Housing Mounting Cable and Bracket	
	Consolidate to Chamber		
	XC	Consolidate to Chamber[33]	

The starred options (★) represent the most common options and should be selected for best delivery. The non-starred offerings are subject to additional delivery lead time.

Reference Reflectors for Dynamic Vapor Compensation Probes (Required for Probe Type 3V and 4U)	
R1	Short reflector. Length=14 in. (350 mm) (Pending, consult factory for details)
R2	Long reflector. Length=20 in. (500 mm) (Pending, consult factory for details)
Example Model String: 5301-H-A-1-S-1-V-1A-M-002-05-AA-I1-M1C1. E-002-05, means 2 ft and 5 in. probe length. M-002-05, means 2.05 m	

(1) HART Revision 5 is the default HART output. The Rosemount 5300 Series transmitter can be factory or field configured to HART Revision 7. To order HART Revision 7 factory configured, add option code HR7.
(2) Not available with Flame/Explosion-proof approvals (E1, E3, E5, E6, E7, KA, KB, KC, and KD)
(3) Process seal rating. Final rating depends on flange and O-ring selection.
(4) Requires option None for sealing (no O-ring).
(5) Welding Procedure Qualification Record Documentation will be supplied.
(6) For other materials, consult the factory.
(7) Consult the factory for this option.
(8) Requires High Temperature High Pressure (code H), High Pressure (code P), or Cryogenic (code C) probe.
(9) Available with Material of Construction codes 1 and D. Consult the factory for other materials.
(10) 0.79 lb (0.36 kg) standard weight for flexible single lead probe. L=5.5 in. (140 mm).
For PTFE covered probes: 2.2 lb (1 kg) standard weight for flexible single lead probe. L=17.1 in. (434 mm).
(11) Extra length for fastening is added in factory.
(12) Requires model 5301.
(13) Only available with standard temperature and pressure (code S).
(14) This is an HTHP probe.
(15) Probe weight included if applicable. Give the total probe length in feet and inches or meters and centimeters, depending on selected probe length unit.
If tank height is unknown, please round up to an even length when ordering. Probes can be cut to exact length in field. Maximum allowable length is determined by process conditions.
(16) Available in 316L SST. For other materials consult the factory.
(17) Raised face type for SST flanges up to class 1500.
(18) Available in 316L SST (EN 1.4404). For other materials, consult the factory.
(19) Type A flat face for SST flanges up to PN100 and type B2 raised face for SST flanges PN160 and PN250.
(20) Raised face type for SST flanges.
(21) Probes are intrinsically safe.
(22) Requires FOUNDATION fieldbus signal output (U_i parameter listed in Appendix B: Product certifications).
(23) For standard tank connection, only available with flange.
(24) For Material SST, Alloy C-276 and Alloy 400; Probe Type 3A, 3B, 4A, 4B, and 4U.
(25) Not available with PTFE covered probes.
(26) Only for Material of Construction code 1 and 3. For other materials, consult the factory.
(27) The standard alarm setting is high.
(28) Certificate includes all pressure retaining wetted parts.
(29) Can not be combined with E2 (INMETRO Flameproof) or I2 (INMETRO Intrinsic Safety).
(30) Only for stainless steel housing material (code S) and standard operating temperature and pressure (code S).
(31) Available for SST and Alloy C-276 probe, type 2A, 4A, 4B, and 5A. Same disc material as probe material.
(32) Available for probe types 2A, 4A, 4B, and 5A, except for HTHP.
(33) Not available for Cryogenic probe.

Table A-7. Model Code 5303, Level for Solids

The starred options (★) represent the most common options and should be selected for best delivery. The non-starred offerings are subject to additional delivery lead time.

	Model	Product Description		
★	5303	Guided Wave Solids Level Transmitter		
	Signal Output			
★	H	4-20 mA with HART communication (HART 5)[1]		
★	F	FOUNDATION fieldbus		
★	M	RS-485 with Modbus communication		
	Housing Material			
★	A	Polyurethane-covered Aluminum		
	S	Stainless Steel, Grade CF8M (ASTM A743)		
	Conduit / Cable Threads			
★	1	½ - 14 NPT		
★	2	M20 x 1.5 adapter		
★	E	M12, 4-pin, Male connector (eurofast®)[2]		
★	M	A size Mini, 4-pin, Male connector (minifast®)[2]		
	Operating Temperature and Pressure			**Probe Type**
★	S	- 15 psig (-1bar) to 580 psig (40 bar) @ 302 °F (150 °C)[3]		All
	Material of Construction[4]: Process Connection / Probe			**Probe Type**
★	1	316 L SST (EN 1.4404)		All
	Sealing, O-ring Material (Consult factory for other o-ring materials)			
★	V	Fluoroelastomer (FKM)		
★	E	Ethylene Propylene		
★	K	Perfluoroelastomer (FFKM)		
★	B	Nitrile butadiene		
	Probe Type		**Process Connection**	**Probe Lengths**
★	5A	Flexible Single Lead with weight, 4 mm[5]	Flange / 1 in., 1.5 in., 2 in. Thread / Tri-Clamp	Min: 3 ft 4 in. (1 m) Max: 115 ft (35 m)
★	5B	Flexible Single Lead with chuck, 4 mm[6]	Flange / 1 in., 1.5 in., 2 in. Thread / Tri-Clamp	Min: 3 ft 4 in. (1 m) Max: 115 ft (35 m)
★	6A	Flexible Single Lead with weight, 6 mm[7]	Flange / 1 in., 1.5 in., 2 in. Thread / Tri-Clamp	Min: 3 ft 4 in. (1 m) Max: 164 ft (50 m)
★	6B	Flexible Single Lead with chuck, 6 mm[6]	Flange / 1 in., 1.5 in., 2 in. Thread /Tri-Clamp	Min: 3 ft 4 in. (1 m) Max: 164 ft (50 m)
	Probe Length Units			
★	E	English (feet, in.)		
★	M	Metric (meters, centimeters)		
	Total Probe Length [8] (feet/m)			
★	XXX	0-164 ft or 0-50 m		

The starred options (★) represent the most common options and should be selected for best delivery. The non-starred offerings are subject to additional delivery lead time.

	Total Probe Length [8] (in./cm)	
★	XX	0-11 in. or 0-99 cm
	Process Connection - Size / Type (consult the factory for other process connections)	
	ASME / ANSI Flanges[9]	
★	AA	2 in., 150 lb
★	AB	2 in., 300 lb
★	BA	3 in., 150 lb
★	BB	3 in., 300 lb
★	CA	4 in., 150 lb
★	CB	4 in., 300 lb
	DA	6 in., 150 lb
	EN (DIN) Flanges[10]	
★	HB	DN50, PN40
★	IA	DN80, PN16
★	IB	DN80, PN40
★	JA	DN100, PN16
★	JB	DN100, PN40
	HI	DN50, PN40, EN 1092-1 Type E spigot face (DIN 2513 Form V13)
	HP	DN50, PN16, EN 1092-1 Type C tongue face (DIN 2512 Form F)
	HQ	DN50, PN40, EN 1092-1 Type C tongue face (DIN 2512 Form F)
	IH	DN80, PN16, EN 1092-1 Type E spigot face (DIN 2513 Form V13)
	II	DN80, PN40, EN 1092-1 Type E spigot face (DIN 2513 Form V13)
	IP	DN80, PN16, EN 1092-1 Type C tongue face (DIN 2512 Form F)
	IQ	DN80, PN40, EN 1092-1 Type C tongue face (DIN 2512 Form F)
	JH	DN100, PN16, EN 1092-1 Type E spigot face (DIN 2513 Form V13)
	JI	DN100, PN40, Type E spigot face (DIN 2513 Form V13)
	JP	DN100, PN16, EN 1092-1 Type C tongue face (DIN 2512 Form F)
	JQ	DN100, PN40, EN 1092-1 Type C tongue face (DIN 2512 Form F)
	KA	DN150, PN16
	JIS Flanges[10]	
★	UA	50A, 10K
★	VA	80A, 10K
★	XA	100A, 10K
	UB	50A, 20K
	VB	80A, 20K
	XB	100A, 20K
	YA	150A, 10K
	YB	150A, 20K

The starred options (★) represent the most common options and should be selected for best delivery. The non-starred offerings are subject to additional delivery lead time.

	ZA	200A, 10K	
	ZB	200A, 20K	
	Threaded Connections[9]		**Probe Type**
★	RA	1 ½ in. NPT thread	All
★	RC	2 in. NPT thread	All
	RB	1 in. NPT thread	All
	SA	1 ½ in. BSP (G 1 ½ in.) thread	All
	SB	1 in. BSP (G 1 in.) thread	All
	Hazardous Locations Certifications		
★	NA	No Hazardous Locations Certifications	
★	E1	ATEX Flameproof	
★	E3	NEPSI Flameproof	
★	E5	FM Explosion-proof	
★	E6	CSA Explosion-proof	
★	E7	IECEx Flameproof	
★	I1	ATEX Intrinsic Safety	
★	IA	ATEX FISCO Intrinsic Safety[11]	
★	I3	NEPSI Intrinsic Safety	
★	IC	NEPSI FISCO Intrinsic Safety[11]	
★	I5	FM Intrinsic Safety and Non-Incendive	
★	IE	FM FISCO Intrinsic Safety[11]	
★	I6	CSA Intrinsic Safety	
★	IF	CSA FISCO Intrinsic Safety[11]	
★	I7	IECEx Intrinsic Safety	
★	IG	IECEx FISCO Intrinsic Safety[11]	
	E2	INMETRO Flameproof	
	I2	INMETRO Intrinsic Safety	
	IB	INMETRO FISCO Intrinsic Safety	
	E4	TIIS Flameproof	
	KA	ATEX, FM, CSA Flameproof/Explosion-proof	
	KB	ATEX, FM, IECEx Flameproof/Explosion-proof	
	KC	ATEX, CSA, IECEx Flameproof/Explosion-proof	
	KD	FM, CSA, IECEx Flameproof/Explosion-proof	
	KE	ATEX, FM, CSA Intrinsic Safety	
	KF	ATEX, FM, IECEx Intrinsic Safety	
	KG	ATEX, CSA, IECEx Intrinsic Safety	
	KH	FM, CSA, IECEx Intrinsic Safety	
	KI	FISCO - ATEX, FM, CSA Intrinsic Safety[11]	

The starred options (★) represent the most common options and should be selected for best delivery. The non-starred offerings are subject to additional delivery lead time.

	KJ	FISCO - ATEX, FM, IECEX Intrinsic Safety [(11)]
	KK	FISCO - ATEX, CSA, IECEX Intrinsic Safety[(11)]
	KL	FISCO - FM, CSA, IECEX Intrinsic Safety[(11)]
	N1	ATEX Type n (Pending, consult factory for details)
	N7	IECEx Type n (Pending, consult factory for details)
	Options	
	Display	
★	M1	Integral digital display
	Communication	
	HR7	4-20 mA with digital signal based on HART 7 protocol. Only available with HART 4-20 mA output (output code H). (Pending, consult factory for details.)
	Hydrostatic Testing	
	P1	Hydrostatic testing[(12)]
	Transient Protection	
	T1	Transient Protection Terminal Block (standard with FISCO options)
	Installation Options	
★	LS	Long stud 9.8 in (250 mm) for flexible single lead probe to prevent contact with wall/nozzle. Standard length is 3.9 in (100 mm) for probes 5A and 5B; 5.9 in. (150 mm) for probes 6A and 6B.
	BR	Mounting Bracket for 1.5 in. NPT Process Connection (RA)[(13)]
	Special Configuration (Software)	
★	C1	Factory configuration (CDS required with order)
★	C4	Namur alarm and saturation levels, high alarm
★	C5	Namur alarm and saturation levels, low alarm
★	C8	Low alarm[(14)] (standard Rosemount alarm and saturation levels)
	Special Certifications	
★	Q4	Calibration Data Certification
★	Q8	Material Traceability Certification per EN 10204 3.1[(15)]
★	QS	Prior-use certificate of FMEDA Data. Only available with HART 4-20 mA output (output code H).
★	QT	Safety-certified to IEC 61508 with certificate of FMEDA data. Only available with HART 4-20 mA output (output code H).
★	U1	WHG Overfill Approval[(16)]. Only available with HART 4-20 mA output (output code H)
	QG	GOST Primary Verification Certificate
	Diagnostic Functionality	
★	D01	FOUNDATION fieldbus Diagnostics Suite (includes Signal Quality Metrics diagnostics)
★	DA1	HART Diagnostics Suite (includes Signal Quality Metrics diagnostics)
	Remote Housing Mounting	
	B1	1 m / 3.2 ft. Remote Housing Mounting Cable and Bracket
	B2	2 m / 6.5 ft. Remote Housing Mounting Cable and Bracket
	B3	3 m / 9.8 ft. Remote Housing Mounting Cable and Bracket

The starred options (★) represent the most common options and should be selected for best delivery. The non-starred offerings are subject to additional delivery lead time.

Example Model String: 5303-H-A-1-S-1-V-6A-M-025-50-AA-I1-M1C1.
E-025-05, means 25 ft and 5 in. probe length. M-025-50, means 25.5 m.

(1) HART Revision 5 is the default HART output. The Rosemount 5300 Series transmitter can be factory or field configured to HART Revision 7. To order HART Revision 7 factory configured, add option code HR7.
(2) Not available with Flame/Explosion-proof approvals (E1, E3, E5, E6, E7, KA, KB, KC, and KD)
(3) Process seal rating. Final rating depends on flange and O-ring selection.
(4) For other materials, consult factory.
(5) 0.79 lb (0.36 kg) standard weight for flexible single lead probe. L=5.5 in. (140 mm).
(6) Extra length for fastening is added in the factory.
(7) 1.2 lb (0.56 kg) standard weight for flexible single lead probe. L=5.5 in. (140 mm).
(8) Probe weight included if applicable. Give the total probe length in feet and inches or meters and centimeters, depending on selected probe length unit. If tank height is unknown, please round up to an even length when ordering. Probes can be cut to exact length in field. Maximum allowable length is determined by process conditions. See "Mounting considerations" on page 24 for more probe length guidance.
(9) Available in 316L SST. For other materials, consult the factory.
(10) Available in 316L SST (EN 1.4404). For other materials, consult the factory.
(11) Requires Foundation fieldbus signal output (U_i parameter listed in Appendix B: Product certifications).
(12) Available for flanged connection.
(13) Only for Standard Temperature and Pressure.
(14) The standard alarm setting is high.
(15) Certificate includes all pressure retaining wetted parts.
(16) Can not be combined with E2 (INMETRO Flameproof) or I2 (INMETRO Intrinsic Safety).

A.4 Spare parts

Table A-8. Spare parts list Transmitter head Model 5301/5302/5303

Model	Product Description
5301	Guided Wave Radar Liquid Level or Interface Transmitter (interface available for fully submerged probe)
5302	Guided Wave Radar Liquid Level and Interface Transmitter
5303	Guided Wave Radar Solid Level Transmitter
Signal Output	
H	4-20 mA with HART communication (HART 5)[(1)]
F	FOUNDATION fieldbus
M	RS-485 with Modbus communication
U	Rosemount 2410 Tank Hub Connectivity (Pending, consult factory for details)
Housing Material	
A	Polyurethane-covered Aluminum
S	Stainless Steel, Grade CF8M (ASTM A743)
Conduit / Cable Threads	
1	½ - 14 NPT
2	M20 x 1.5 adapter
E	M12, 4-pin, Male connector (eurofast®)[(2)]
M	A size Mini, 4-pin, Male connector (minifast®)[(2)]
Operating Temperature and Pressure	
N	Not Applicable
Material of Construction: Process Connection / Probe	
0	Not Applicable
Sealing, O-ring Material (Consult factory for other o-ring materials)	
N	Not Applicable
Probe Type	
0N	None
Probe Length Units	
N	Not Applicable
Total Probe Length (feet/m)	
00	Not Applicable
Total Probe Length (in./cm)	
00	Not Applicable
Process Connection - Size / Type (consult the factory for other process connections)	
NA	Not Applicable
Hazardous Locations Certifications	
NA	No Hazardous Locations Certifications
E1	ATEX Flameproof[(4)]

E3	NEPSI Flameproof[4]
E5	FM Explosion-proof[4]
E6	CSA Explosion-proof[4]
E7	IECEx Flameproof[4]
I1	ATEX Intrinsic Safety
IA	ATEX FISCO Intrinsic Safety[3]
I3	NEPSI Intrinsic Safety
IC	NEPSI FISCO Intrinsic Safety[3]
I5	FM Intrinsic Safety and Non-Incendive
IE	FM FISCO Intrinsic Safety[3]
I6	CSA Intrinsic Safety
IF	CSA FISCO Intrinsic Safety[3]
I7	IECEx Intrinsic Safety
IG	IECEx FISCO Intrinsic Safety[3]
KA	ATEX, FM, CSA Flameproof/Explosion-proof[4]
KB	ATEX, FM, IECEx Flameproof/Explosion-proof[4]
KC	ATEX, CSA, IECEx Flameproof/Explosion-proof[4]
KD	FM, CSA, IECEx Flameproof/Explosion-proof[4]
KE	ATEX, FM, CSA Intrinsic Safety
KF	ATEX, FM, IECEx Intrinsic Safety
KG	ATEX, CSA, IECEx Intrinsic Safety
KH	FM, CSA, IECEx Intrinsic Safety
KI	FISCO - ATEX, FM, CSA Intrinsic Safety[3]
KJ	FISCO - ATEX, FM, IECEX Intrinsic Safety[3]
KK	FISCO - ATEX, CSA, IECEX Intrinsic Safety[3]
KL	FISCO - FM, CSA, IECEX Intrinsic Safety[3]
N1	ATEX Type n (Pending, consult factory for details)
N7	IECEx Type n (Pending, consult factory for details)
Options	
Display	
M1	Integral digital display
Communication	
HR7	4–20 mA with digital signal based on HART 7 protocol. Only available with HART 4-20 mA output (output code H). (Pending, consult factory for details)
Transient Protection	
T1	Transient Protection Terminal Block (standard with FISCO options)
Remote Housing Mounting	
B1	1 m / 3.2 ft. Remote Housing Mounting Cable and Bracket
B2	2 m / 6.5 ft. Remote Housing Mounting Cable and Bracket
B3	3 m / 9.8 ft. Remote Housing Mounting Cable and Bracket

Special Configuration (Software)	
C1	Factory configuration (CDS required with order)
C4	Namur alarm and saturation levels, high alarm
C5	Namur alarm and saturation levels, low alarm
C8	Low alarm [5] (standard Rosemount alarm and saturation levels)
Special Certifications	
Q4	Calibration Data Certification
QG	GOST Primary Verification Certificate
QS	Prior-use certificate of FMEDA Data. Only available with HART 4-20 mA output (output code H).
Diagnostic Functionality	
D01	FOUNDATION fieldbus Diagnostics Suite (includes Signal Quality Metrics diagnostics)
DA1	HART Diagnostics Suite (includes Signal Quality Metrics diagnostics)

(1) HART Revision 5 is the default HART output. The Rosemount 5300 Series transmitter can be factory or field configured to HART Revision 7. To order HART Revision 7 factory configured, add option code HR7.
(2) Not available with Flame/Explosion-proof approvals (E1, E3, E5, E6, E7, KA, KB, KC, and KD)
(3) Requires Foundation fieldbus signal output.
(4) Probes are intrinsically safe.
(5) The standard alarm setting is high.

Table A-9. Spare parts list Probe Model 5301/5302/5303

Model	Product Description		
5309	Spare probe		
Signal Output			
N	Not Applicable		
Housing Material			
N	Not Applicable		
Conduit / Cable Threads			
N	Not Applicable		
Operating Temperature and Pressure[1]			**Probe Type**
S	- 15 psig (-1bar) to 580 psig (40 bar) @ 302 °F (150 °C)		All
H	High Temp / High Pressure[2]: 2940 psi @ 752 °F and 5000 psi @ 100 °F (203 bar @ 400 °C and 345 bar @ 38 °C)		3A, 3B, 4A, 4U, 4V, 5A and 5B
P	High Pressure[2]: Max 392 °F (200 °C): 3500 psi @ 392 °F and 5000 psi @ 100 °F (243 bar @ 200 °C and 345 bar @ 38 °C)		3A, 3B, 4A, 5A and 5B
C	Cryogenic Temperature[2] [3] -321 °F (-196 °C) Max 392 °F (200 °C): 3500 psi @ 392 °F and 5000 psi @ 100 °F (243 bar @ 200 °C and 345 bar @ 38 °C)		3A, 3B, 4A, 5A, 5B (only SST)
Material of Construction[4]: Process Connection / Probe		**Probe Type**	**Valid Operation Temperature and Pressure**
1	316 L SST (EN 1.4404)	All	S, H, P, C
2	Alloy C-276 (UNS N10276). With plate design if flanged version. Up to class 600, PN 63 for HTHP/HP probes.	3A, 3B, 4A	S, H, P
3	Alloy 400 (UNS N04400). With plate design if flanged version.	3A, 3B, 4A, 5A, 5B	S
7	PTFE covered probe and flange. With plate design.	4A and 5A	S
8	PTFE covered probe.	4A and 5A	S
H	Alloy C-276 (UNS N10276) process connection, flange and probe[5]	3A, 3B, 4A	H, P
D	Alloy 2205 process connection, flange and probe	4B	S, H, P
Sealing, O-ring Material (Consult factory for other o-ring materials)			
N	None[6]		
V	Fluoroelastomer (FKM)		
E	Ethylene Propylene		
K	Kalrez® 6375 perfluoroelastomer		
B	Nitrile butadiene		

Probe Type		Process Connection	Probe Lengths
1A	Rigid Twin Lead[7]	Flange / 1.5 in., 2 in.[7] Thread	Min: 1 ft 4 in. (0.4 m) Max: 9 ft 10 in. (3 m)
2A	Flexible Twin Lead with weight[7]	Flange / 1.5 in., 2 in.[7] Thread	Min: 3 ft 4 in. (1 m) Max: 164 ft (50 m)
3A	Coaxial (for level measurement)[8]	Flange / 1 in.[7], 1.5 in., 2 in.[7] Thread	Min: 1 ft 4 in. (0.4 m) Max: 19 ft 8 in. (6 m)
3B	Coaxial, perforated. For level and interface measurement, or easier cleaning.	Flange / 1 in.[7], 1.5 in., 2 in.[7] Thread	Min: 1 ft 4 in. (0.4 m) Max: 19 ft 8 in. (6 m)
3V	Integrated Still Pipe Vapor Probe. For 3 in. chambers and above.[10] Refer to page 249 to specify reference reflector length.	Flange / 1.5 in. Thread	Min: 2 ft 11 in. (0.9 m) for the short reflector (R1 option) Min: 3 ft 7 in. (1.1 m) for the long reflector (R2 option) Max: 13 ft 1 in. (4 m)
4A	Rigid Single Lead (8 mm)	Flange / 1 in.[7], 1.5 in., 2 in.[7] Thread / Tri-Clamp	Min: 1 ft 4 in. (0.4 m) Max: 9 ft 10 in. (3 m)
4B	Rigid Single Lead (13 mm)[9]	Flange / 1 in., 1.5 in., 2 in. Thread / Tri-Clamp	Min: 1 ft 4 in. (0.4 m) Max: 19 ft 8 in. (6 m)
4U	Single Rigid Vapor Probe. For 2 in. chambers.[10] Refer to page 249 to specify reference reflector length.	Flange / 1.5 in. Thread	Min: 2 ft 11 in. (0.9 m) for the short reflector (R1 option) Min: 3 ft 7 in. (1.1 m) for the long reflector (R2 option) Max: 7.5 ft (2.3 m)
5A	Flexible Single Lead with weight	Flange / 1 in.[7], 1.5 in., 2 in.[7] Thread / Tri-Clamp	Min: 3 ft 4 in. (1 m) Max: 164 ft (50 m)
5B	Flexible Single Lead with chuck[11]	Flange / 1 in.[7], 1.5 in., 2 in.[7] Thread / Tri-Clamp	Min: 3 ft 4 in. (1 m) Max: 164 ft (50 m)
6A	Flexible Single Lead with weight, 6 mm[12]	Flange / 1 in., 1.5 in., 2 in. Thread / Tri-Clamp	Min: 3 ft 4 in. (1 m) Max: 164 ft (50 m)
6B	Flexible Single Lead with chuck, 6 mm[11] [12]	Flange / 1 in., 1.5 in., 2 in. Thread /Tri-Clamp	Min: 3 ft 4 in. (1 m) Max: 164 ft (50 m)
Probe Length Units			
E	English (feet, in.)		
M	Metric (meters, centimeters)		
Total Probe Length [13] (feet/m)			
XXX	0-164 ft or 0-50 m		
Total Probe Length [13] (in./cm)			
XX	0-11 in. or 0-99 cm		
Process Connection - Size / Type (consult factory for other process connections)			
ANSI Flanges[15]			**Operating Temperature and Pressure**
AA	2 in., 150 lb		S, H, P, C
AB	2 in., 300 lb		S, H, P, C
AC	2 in., 600 lb		H, P, C
AD	2 in., 900 lb		H, P, C
AE	2 in., 1500 lb		H, P, C

AI	2 in., 600 lb, RTJ (Ring Type Joint)	H, P, C
AJ	2 in., 900 lb, RTJ (Ring Type Joint)	H, P, C
AK	2 in., 1500 lb, RTJ (Ring Type Joint)	H, P, C
BA	3 in., 150 lb	S, H, P, C
BB	3 in., 300 lb	S, H, P, C
BC	3 in., 600 lb	H, P, C
BD	3 in., 900 lb	H, P, C
BE	3 in., 1500 lb	H, P, C
BI	3 in., 600 lb, RTJ (Ring Type Joint)	H, P, C
BJ	3 in., 900 lb, RTJ (Ring Type Joint)	H, P, C
BK	3 in., 1500 lb, RTJ (Ring Type Joint)	H, P, C
CA	4 in., 150 lb	S, H, P, C
CB	4 in., 300 lb	S, H, P, C
CC	4 in., 600 lb	H, P, C
CD	4 in., 900 lb	H, P, C
CE	4 in., 1500 lb	H, P, C
CI	4 in., 600 lb, RTJ (Ring Type Joint)	H, P, C
CJ	4 in., 900 lb, RTJ (Ring Type Joint)	H, P, C
CK	4 in., 1500 lb, RTJ (Ring Type Joint)	H, P, C
DA	6 in., 150 lb	S, H, P, C
EN (DIN) Flanges[14]		**Operating Temperature and Pressure**
HB	DN50, PN40	S, H, P, C
HC	DN50, PN63	H, P, C
HD	DN50, PN100	H, P, C
HE	DN50, PN160	H, P, C
HF	DN50, PN250	H, P, C
HI	DN50, PN40, EN 1092-1 Type E spigot face (DIN 2513 Form V13)	S, H, P, C
HP	DN50, PN16, EN 1092-1 Type C tongue face (DIN 2512 Form F)	S, H, P, C
HQ	DN50, PN40, EN 1092-1 Type C tongue face (DIN 2512 Form F)	S, H, P, C
IA	DN80, PN16	S, H, P, C
IB	DN80, PN40	S, H, P, C
IC	DN80, PN64	H, P, C
ID	DN80, PN100	H, P, C
IE	DN80, PN160	H, P, C
IF	DN80, PN250	H, P, C
IH	DN80, PN16, EN 1092-1 Type E spigot face (DIN 2513 Form V13)	S, H, P, C
II	DN80, PN40, EN 1092-1 Type E spigot face (DIN 2513 Form V13)	S, H, P, C
IP	DN80, PN16, EN 1092-1 Type C tongue face (DIN 2512 Form F)	S, H, P, C
IQ	DN80, PN40, EN 1092-1 Type C tongue face (DIN 2512 Form F)	S, H, P, C

JA	DN100, PN16	S, H, P, C
JB	DN100, PN40	S, H, P, C
JC	DN100, PN64	H, P, C
JD	DN100, PN100	H, P, C
JE	DN100, PN160	H, P, C
JF	DN100, PN250	H, P, C
JH	DN100, PN16, EN 1092-1 Type E spigot face (DIN 2513 Form V13)	S, H, P, C
JI	DN100, PN40, Type E spigot face (DIN 2513 Form V13)	S, H, P, C
JP	DN100, PN16, EN 1092-1 Type C tongue face (DIN 2512 Form F)	S, H, P, C
JQ	DN100, PN40, EN 1092-1 Type C tongue face (DIN 2512 Form F)	S, H, P, C
KA	DN150, PN16	S, H, P, C
JIS Flanges[14]		**Operating Temperature and Pressure**
UA	50A, 10K	S, H, P, C
UB	50A, 20K	S, H, P, C
VA	80A, 10K	S, H, P, C
VB	80A, 20K	S, H, P, C
XA	100A, 10K	S, H, P, C
XB	100A, 20K	S, H, P, C
YA	150A, 10K	S, H, P, C
YB	150A, 20K	S, H, P, C
ZA	200A, 10K	S, H, P, C
ZB	200A, 20K	S, H, P, C
Threaded Connections[15]		**Probe Type**
RA	1 ½ in. NPT thread	All
RB	1 in. NPT thread	3A, 3B, 4A, 4B, 5A, 5B, 6A, 6B, standard temperature and pressure
RC	2 in. NPT thread	All for standard temperature and pressure
SA	1 ½ in. BSP (G 1 ½ in.) thread	All
SB	1 in. BSP (G 1 in.) thread	3A, 3B, 4A, 4B, 5A, 5B, 6A, 6B, standard temperature and pressure
Tri-Clamp Fittings[15]		**Probe Type**
FT	1 ½ in. Tri-Clamp	4A, 5A, 5B standard temperature and pressure
AT	2 in. Tri-Clamp	4A, 4B, 5A, 5B standard temperature and pressure
BT	3 in. Tri-Clamp	4A, 4B, 5A, 5B standard temperature and pressure
CT	4 in. Tri-Clamp	4A, 4B, 5A, 5B standard temperature and pressure

Proprietary Flanges		
TF	Fisher - proprietary 316L SST (for 249B, 259B chambers) Torque Tube Flange	
TT	Fisher - proprietary 316L SST (for 249C chambers) Torque Tube Flange	
TM	Masoneilan - proprietary 316L SST Torque Tube Flange	
Special Process Connection		
XX	Special Process Connection	
Hazardous Locations Certifications		
NA	Not Applicable	
Options		
Hydrostatic Testing		
P1	Hydrostatic testing(16)	
Materials Certification		
N2	NACE material recommendation per MR 0175 (17)	
Installation Options		
LS	Long stud(18) 9.8 in (250 mm) for flexible single lead probe to prevent contact with wall/nozzle. Standard length is 3.9 in (100 mm) for probes 5A and 5B; 5.9 in. (150 mm) for probes 6A and 6B.	
BR	Mounting Bracket for 1.5 in. NPT Process Connection (RA)(19)	
Weight and Anchoring options for Flexible Single Probes (Probe Type 5A)		
W2	Short weight (when measuring close to the probe end)(20) Weight=0.79 lb (0.36 kg). Length=2 in. (50 mm), Diameter=1.5 in. (37.5 mm)	
W3	Heavy weight (recommended choice for most applications) Weight=2.2 lb (1 kg), Length=5.5 in. (140 mm), Diameter=1.5 in. (37.5 mm)	
Centering Discs		**Outer Diameter**
S2	2 in. Centering disc(21)	1.8 in. (45 mm)
S3	3 in. Centering disc(21)	2.7 in. (68 mm)
S4	4 in. Centering disc(21)	3.6 in. (92 mm)
S6	6 in. Centering disc(21)	5.55 in. (141 mm)
S8	8 in. Centering disc(21)	7.40 in. (188 mm)
P2	2 in. Centering disc PTFE(22)	1.8 in. (45 mm)
P3	3 in. Centering disc PTFE(22)	2.7 in. (68 mm)
P4	4 in. Centering disc PTFE(22)	3.6 in. (92 mm)
P6	6 in. Centering disc PTFE(22)	5.55 in. (141 mm)
P8	8 in. Centering disc PTFE(22)	7.40 in. (188 mm)
Special Certifications		
Q8	Material Traceability Certification per EN 10204 3.1(23)	
Reference Reflectors for Dynamic Vapor Compensation Probes (Required for Probe Type 3V and 4U)		
R1	Short reflector. Length=14 in. (350 mm) (Pending, consult factory for details)	
R2	Long reflector. Length=20 in. (500 mm) (Pending, consult factory for details)	

(1) Process seal rating. Final rating depends on flange and O-ring selection.
(2) Requires option None for sealing (no O-ring).
(3) Welding Procedure Qualification Record Documentation will be supplied.

(4) For other materials, consult the factory.
(5) Consult the factory for this option.
(6) Requires High Temperature High Pressure (code H) or High Pressure (code P) probe.
(7) Only available with standard temperature and pressure (code S).
(8) Requires model 5301.
(9) Available with Material of Construction codes 1 and D. Consult the factory for other materials.
(10) This is an HTHP probe.
(11) Extra length for fastening is added in factory.
(12) Requires model 5303.
(13) Probe weight included if applicable. Give the total probe length in feet and inches or meters and centimeters, depending on selected probe length unit. If tank height is unknown, please round up to an even length when ordering. Probes can be cut to exact length in field. Maximum allowable length is determined by process conditions. See "Mounting considerations" on page 24 for more probe length guidance.
(14) Available in 316L SST (EN 1.4404). For other materials consult the factory.
(15) Available in 316L SST. For other materials consult the factory.
(16) For standard tank connection only available with flange.
(17) For Material SST, Alloy C-276 and Alloy 400; Probe Type 3A, 3B, 4A, 4B, 4U, and 4V.
(18) Not available with PTFE covered probes.
(19) Only for Standard Temperature and Pressure.
(20) Only for Material of Construction code 1. For other materials, consult the factory.
(21) Available for SST and Alloy C-276 probes, type 2A, 4A, 4B, and 5A. Same disc material as probe material.
(22) Available for SST probes, type 2A, 4A, 4B, 5A and 6A except for HTHP.
(23) Certificate includes all pressure retaining wetted metal parts.

Table A-10. Spare parts list Other Spares and Accessories Rosemount 5300 Series

Code	Process Connection - Size/Type (consult factory for other process connections)
Other spares	
03300-7001-0002	Weight kit Flexible Twin lead
03300-7001-0003	Weight kit Flexible 4 mm Single lead
03300-7001-0004	Weight kit Flexible 6 mm Single lead
Other accessories	
03300-7004-0001	MACTek Viator HART Modem and cables (RS 232 connection)
03300-7004-0002	MACTek Viator HART Modem and cables (USB connection)
03300-2001-0001	Mounting Bracket for 1.5 in. NPT Process Connection (RA)
Centering discs[(1) (2)]	
03300-1655-0001	Kit, 2 in. Centering Disc, SST, Rigid Single
03300-1655-0002	Kit, 3 in. Centering Disc, SST, Rigid Single
03300-1655-0003	Kit, 4 in. Centering Disc, SST, Rigid Single
03300-1655-0004	Kit, 6 in. Centering Disc, SST, Rigid Single
03300-1655-0005	Kit, 8 in. Centering Disc, SST, Rigid Single
03300-1655-0006	Kit, 2 in. Centering Disc, PTFE, Rigid Single
03300-1655-0007	Kit, 3 in. Centering Disc, PTFE, Rigid Single
03300-1655-0008	Kit, 4 in. Centering Disc, PTFE, Rigid Single
03300-1655-0009	Kit, 6 in. Centering Disc, PTFE, Rigid Single
03300-1655-0010	Kit, 8 in. Centering Disc, PTFE, Rigid Single
03300-1655-1001	Kit, 2 in. Centering Disc, SST, Single / Twin Flex Lead
03300-1655-1002	Kit, 3 in. Centering Disc, SST, Single / Twin Flex Lead
03300-1655-1003	Kit, 4 in. Centering Disc, SST, Single / Twin Flex Lead
03300-1655-1004	Kit, 6 in. Centering Disc, SST, Single / Twin Flex Lead
03300-1655-1005	Kit, 8 in. Centering Disc, SST, Single / Twin Flex Lead
03300-1655-1006	Kit, 2 in. Centering Disc, PTFE, Single / Twin Flex Lead
03300-1655-1007	Kit, 3 in. Centering Disc, PTFE, Single / Twin Flex Lead
03300-1655-1008	Kit, 4 in. Centering Disc, PTFE, Single / Twin Flex Lead
03300-1655-1009	Kit, 6 in. Centering Disc, PTFE, Single / Twin Flex Lead
03300-1655-1010	Kit, 8 in. Centering Disc, PTFE, Single / Twin Flex Lead
Remote Housing / Bracket Mounting	
03300-7006-0001	1m / 3.2 ft Remote Housing Mounting Cable and Bracket
03300-7006-0002	2m / 6.5 ft Remote Housing Mounting Cable and Bracket
03300-7006-0003	3m / 9.8 ft Remote Housing Mounting Cable and Bracket
03300-3001-0004	1m / 3.2 ft Remote Housing Mounting Cable
03300-3001-0005	2m / 6.5 ft Remote Housing Mounting Cable
03300-3001-0006	3m / 9.8 ft Remote Housing Mounting Cable
Vented Flanges [(3)]	
03300-1811-9001	Fisher 249B

03300-1811-9002	Fisher 249C
03300-1811-9003	Masoneilan
Flushing Connection Rings	
DP0002-2111-S6	2 in. ANSI, ¼ in. NPT connection
DP0002-3111-S6	3 in. ANSI, ¼ in. NPT connection
DP0002-4111-S6	4 in. ANSI, ¼ in. NPT connection
DP0002-5111-S6	DN50, ¼ in. NPT connection
DP0002-8111-S6	DN80, ¼ in. NPT connection
Cable Glands	
03300-7000-0001	Cable Gland 8-15mm, 1/2NPT Mo Brass Nickel Plated, KV1
03300-7000-0002	Cable Gland 4-8mm, 1/2NPT Brass, KVE7, EExd
03300-7000-0003	Cable Gland 8-11mm, 1/2NPT Brass, KVE8, EExd
03300-7000-0004	Cable Gland 6-12mm, 1/2 NPT Polyamide Grey

(1) If a centering disc is required for a flanged probe the centering disc can be ordered with options CS or CP in the model code. If a centering disc is required for a threaded connection or as a spare part it should be ordered using the item numbers listed below.
(2) To order a centering disc in a different material, consult the factory.
(3) 1½ in. NPT threaded connection (RA) is required.

Appendix B Product certifications

Safety messages . . . . . page 253
Hazardous Locations certifications . . . . . page 255
Combination approvals . . . . . page 271
Approval drawings . . . . . page 271

B.1 Safety messages

Procedures and instructions in this section may require special precautions to ensure the safety of the personnel performing the operations. Information that raises potential safety issues is indicated by a warning symbol (⚠). Please refer to the following safety messages before performing an operation preceded by this symbol.

⚠ WARNING

Explosions could result in death or serious injury.

Verify that the operating environment of the transmitter is consistent with the appropriate hazardous locations certifications.

Before connecting a HART-based communicator in an explosive atmosphere, make sure the instruments in the loop are installed in accordance with intrinsically safe or non-incendive field wiring practices.

Do not remove the transmitter cover in explosive atmospheres when the circuit is alive.

⚠ WARNING

Failure to follow safe installation and servicing guidelines could result in death or serious injury:

Make sure the transmitter is installed by qualified personnel and in accordance with applicable code of practice.

Use the equipment only as specified in this manual. Failure to do so may impair the protection provided by the equipment.

Do not perform any service other than those contained in this manual unless you are qualified.

Any substitution of non-recognized spare parts may jeopardize safety. Repair, for e.g. substitution of components etc. may also jeopardize safety and is under no circumstances allowed.

To prevent ignition of flammable or combustible atmospheres, disconnect power before servicing.

⚠ WARNING

High voltage that may be present on leads could cause electrical shock:

Avoid contact with leads and terminals.

Make sure the mains power to the Radar Transmitter is off and the lines to any other external power source are disconnected or not powered while wiring the transmitter.

Probes covered with plastic and/or with plastic discs may generate an ignition-capable level of electrostatic charge under certain extreme conditions. Therefore, when the probe is used in a potentially explosive atmosphere, appropriate measures must be taken to prevent electrostatic discharge.

European Directive information

The EC declaration of conformity for all applicable European directives for this product can be found on the Rosemount website at www.rosemount.com. A hard copy may be obtained by contacting our local sales representative.

B.2 Hazardous Locations certifications

Other temperature restrictions may apply beside the ones mentioned in the following sections. For more information, see "Specifications" on page 202.

B.2.1 North-American certifications

Factory Mutual (FM) Approvals

The Rosemount 5300 Series Guided Wave Radar Level Transmitter that has the following labels attached has been certified to comply with the requirements of the approval agencies noted.

Explosion-proof

E5 Explosion-proof for Class I, Division 1, Groups B, C and D.

Dust-ignition-proof for Class II/III, Division 1, Groups E, F and G with intrinsically safe connections to Class I, II, III, Div 1, Groups B, C, D, E, F and G.

Temperature code T4.

Ambient temperature limits: -50 °C to + 70 °C(1).

Seal not required.

Approval valid for the HART, FOUNDATION fieldbus, and Modbus options.

(1) +60 °C with FOUNDATION fieldbus option.

Intrinsic safety

Figure B-1. Example approval label: Factory Mutual (FM) HART intrinsic safety and Non-Incendive

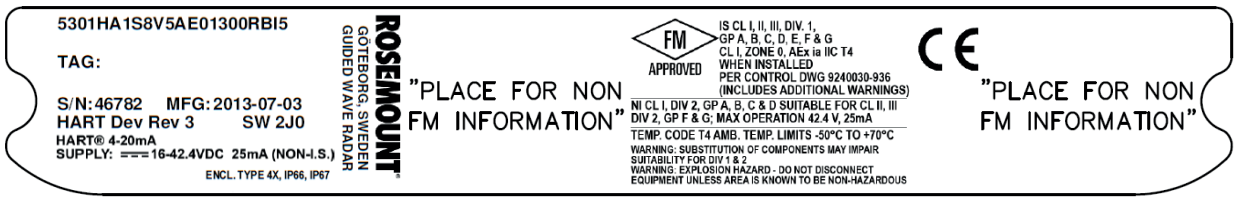

I5, IE Intrinsically Safe for Class I, II, III, Division 1, Groups A, B, C, D, E, F and G.
Class I, Zone 0, AEX ia IIC T4 when installed per control drawing: 9240 030-936.

Non-incendive for Class I, Division 2, Groups A, B, C and D. Suitable for Class II, III, Division 2, Groups F and G(1);

4-20 mA/HART model: U_i = 30 V, I_i = 130 mA, P_i = 1.0 W, C_i = 7.26 nF, L_i = 0 µH.
Max operation 42.4 V, 25 mA.

FOUNDATION fieldbus model: U_i = 30 Vdc, I_i = 300 mA, P_i = 1.3 W, C_i = 0 nF, L_i = 0 µH.
Max operation 32 V, 25 mA.

FISCO model: U_i = 17.5 Vdc, I_i = 380 mA, P_i = 5.32 W, L_i = C_i = 0.

Temperature code T4.
Ambient temperature Limits: -50 °C to + 70 °C(2)

WARNING : To prevent ignition of flammable or combustible atmospheres, read , understand and adhere to the manufacturer's live maintenance procedures.

WARNING: Substitution of components may impair Intrinsic Safety.

WARNING: Potential Electrostatic Charging Hazard – The enclosure is constructed from plastic. To prevent the risk of electrostatic sparking the plastic surface should only be cleaned with a damp cloth.

WARNING: The apparatus enclosure contains aluminum and is considered to constitute a potential risk of ignition by impact or friction. Care must be taken into account during installation and use to prevent impact or friction.

(1) Valid for the HART and FOUNDATION fieldbus options only.
(2) +60 °C with FOUNDATION fieldbus or FISCO option.

Canadian Standards Association (CSA) Approval

This product meets the Dual Seal Requirements of ANSI/ISA 12.27.01-2003 when indicated on the marking label.

Dual seal annunciation

The breach of the secondary seal is annunciated via product leakage from the antenna's vents. The leakage will be visible and/or audible from the transmitter head's threads.

Dual seal maintenance

No maintenance required. Verify proper operation by keeping leak path free from ice or contamination.

Cert. no. 1514653.

Explosion-proof

E6 Explosion-proof with internal Intrinsically Safe Circuits [Exia].

Class I, Div. 1, Groups B, C and D.

Temperature Code T4.

Class II, Div. 1 and 2, Groups E, F and G;

Class III, Div. 1

Ambient temperature limits -50 °C to +70 °C[(1)].

Installation drawing: 9240 030-937.

Factory sealed.

Approval valid for the HART, FOUNDATION fieldbus, and Modbus options.

(1) +60 °C with FOUNDATION fieldbus option.

Intrinsic safety

Figure B-2. Example approval label: Canadian Standards Association (CSA) HART intrinsic safety



I6, IF Intrinsically Safe Ex ia.

Class I, Division 1, Groups A, B, C and D.

Temperature code T4.

4-20 mA/HART model: U_i = 30 Vdc, I_i = 130 mA, P_i = 1.0 W, C_i = 7.26 nF, L_i = 0 µH.

FOUNDATION fieldbus model: U_i = 30 Vdc, I_i = 300 mA, P_i = 1.3 W, C_i = 0 nF, L_i = 0 µH.

FISCO model: U_i = 17.5 Vdc, I_i = 380 mA, P_i = 5.32 W, C_i = 0 nF, L_i = 0 µH.

Installation drawing: 9240 030-937.

Ambient temperature limits: -50 °C to + 70 °C(1).

WARNING: The substitution of components may impair intrinsic safety.

(1) +60 °C with FOUNDATION fieldbus or FISCO option.

B.2.2 European certifications

European ATEX Directive Information

Flameproof

The Rosemount 5300 Series Guided Wave Radar Level Transmitter that has the following label attached has been certified to comply with Directive 94/9/EC of the European Parliament and the Council as published in the Official Journal of the European Communities No. L 100/1 on 19-April-1994.

E1 The following information is provided as part of the label of the transmitter:

Name and address of the manufacturer (Rosemount).

CE conformity marking

CE 0575

Complete model number

The serial number of the device

Year of construction

Marking for explosion protection:



II 1/2G Ex ia/db ia IIC T4 Ga/Gb

II 1D Ex ta IIIC T79 °C(1)

-40 °C ≤ T_a ≤ +70 °C(2)

Nemko ATEX certificate number: Nemko 04ATEX1073X

U_m = 250 VAC

Approval valid for the HART, FOUNDATION fieldbus, and Modbus options.

Special conditions for safe use (X):

The intrinsically safe circuits do not withstand the 500V AC test as specified in IEC 60079-11 clause 6.4.12.

Impact and friction hazards need to be considered according to EN 60079-0 clause 8.1.2 when the transmitter and part of antennas exposed to the exterior atmosphere of the tank is made with light metal alloys and of category II 1G EPL Ga.

Parts of the rod-antenna and the all PTFE antenna are non-conducting and the area of the non-conducting part exceeds the maximum permissible areas for Group IIC according to IEC 60079-0 clause 7.3: 20 cm^2 for II 2G EPL Gb and 4 cm^2 for II 1G EPL Ga. Therefore, when the antenna is used in a potentially explosive atmosphere, appropriate measures must be taken to prevent electrostatic discharge.

(1) +69 °C with FOUNDATION fieldbus option.
(2) +60 °C with FOUNDATION fieldbus option.

Intrinsic safety

The Rosemount 5300 Series Guided Wave Radar Level Transmitter that has the following label attached has been certified to comply with Directive 94/9/EC of the European Parliament and the Council as published in the Official Journal of the European Communities No. L 100/1 on 19-April-1994.

Figure B-3. Example approval label: ATEX HART intrinsic safety



I1, IA The following information is provided as part of the label of the transmitter:

Name and address of the manufacturer (Rosemount).

CE conformity marking

CE 0575

Complete model number

The serial number of the device

Year of construction

Marking for explosion protection:

Ex

II 1G Ex ia IIC T4

II 1/2G Ex ia/ib IIC T4 Ga/Gb(1)

II 1D Ex ta IIIC T79 °C(2)

-50 °C ≤ T_a ≤ +70 °C(3)

4-20 mA/HART model: $U_i \leq 30$ V, $I_i \leq 130$ mA, $P_i \leq 1.0$ W, $C_i = 7.26$ nF, $L_i = 0$ µH.

FOUNDATION fieldbus model: $U_i \leq 30$ Vdc, $I_i \leq 300$ mA, $P_i \leq 1.5$ W, $C_i = 4.95$ nF, $L_i = 0$ µH.

FISCO model: $U_i \leq 17.5$ Vdc, $I_i \leq 380$ mA, $P_i \leq 5.32$ W, $C_i = 4.95$ nF, $L_i < 1$ µH.

Nemko ATEX certificate number: Nemko 04ATEX1073X

Installation drawing: 9240 030-938.

Approval valid for the HART, FOUNDATION fieldbus, and FISCO options.

(1) Valid for the FISCO option only.
(2) +69 °C with FOUNDATION fieldbus or FISCO option.
(3) +60 °C with FOUNDATION fieldbus or FISCO option.

Special conditions for safe use (X):

The intrinsically safe circuits do not withstand the 500V AC test as specified in IEC 60079-11 clause 6.4.12.

Impact and friction hazards need to be considered according to EN 60079-0 clause 8.1.2 when the transmitter and part of antennas exposed to the exterior atmosphere of the tank is made with light metal alloys and of category II 1G EPL Ga.

Parts of the rod-antenna and the all PTFE antenna are non-conducting and the area of the non-conducting part exceeds the maximum permissible areas for Group IIC according to IEC 60079-0 clause 7.3: 20 cm^2 for II 2G EPL Gb and 4 cm^2 for II 1G EPL Ga. Therefore, when the antenna is used in a potentially explosive atmosphere, appropriate measures must be taken to prevent electrostatic discharge.

The Ex ia version of model 5300 FISCO field device may be supplied by an [Ex ib] FISCO power supply when the power supply is certified with three separate safety current limiting devices and voltage limitation which meets the requirements for type Ex ia.

Type n approvals: Non-Sparking/Energy Limited

N1 The following information is provided as part of the label of the transmitter:

Name and address of the manufacturer (Rosemount).

CE conformity marking

CE 0575

Complete model number

The serial number of the device

Year of construction

Marking for explosion protection:



II 3G Ex nA nL IIC T4 Gc (-50 °C < T_a < +70 °C[(1)])

II 3G Ex nL IIC T4 Gc (-50 °C < T_a < +70 °C[(1)])

Nemko 10ATEX1072

4-20 mA/HART model: U_n = 42.4 V

FOUNDATION fieldbus model: U_n = 32 V

Approval valid for the HART and FOUNDATION fieldbus options.

Installation drawing: 9240031-957.

(1) +60 °C with FOUNDATION fieldbus or FISCO option.

B.2.3 Brazilian certifications

INMETRO Approvals

Special conditions for safe use (X)

Letter X in the number of the certificate indicates the following special condition(s) for safe use:

- For models 530xFxxxxxxxxxE1..., 530xFxxxxxxxxxKA..., 530xFxxxxxxxxxKB... or 530xFxxxxxxxxxKC... and when the sensor area requires an EPL Ga, the installation of the transmitter on the process wall must be done in a way that ensures the minimum degree of protection IP67 in the connection, in compliance with regulation ABNT NBR IEC 60529.
- The intrinsically safe circuit did not withstand the dielectric rigidity tests with 500 Vca as specified in clause 6.4.12 of regulation IEC 60079-11.
- Probes covered with plastic or plastic discs should have a non-conductive area not exceeding the maximum permitted area for the MC group, which is 4 cm^2. Therefore, when an antenna is used in a potentially explosive atmosphere, appropriate measures should be taken by the user to prevent electrostatic discharge.
- This equipment contains light metals. The equipment must be installed in a way that the risk of impact or friction with other metal surfaces is eliminated.
- The Ex ia version of the field device of model FISCO 5300 can be provided with a FISCO [Ex ib] power supply when the power supply is certified with three current limiter safety devices separately and with limitation of voltage, complying with the requirements of the Ex ia model.

Certificate: NCC 4205/07X

Standards:

ABNT NBR IEC: 60079-0:2008/2010, 60079-1:2009, 60079-11:2009, 60079-26:2008
IEC 60079-31:2008

Flameproof

E2 Ex d ia IIC T4 Gb/Ga
Ex ta IIIC T79 °C(1)
-40 °C ≤ T_a ≤ +70 °C(2)
U_m = 250 V
Approval valid for the HART, FOUNDATION fieldbus, and Modbus options.

(1) +69 °C with FOUNDATION fieldbus option.
(2) +60 °C with FOUNDATION fieldbus option.

Intrinsic safety

I2, IB Ex ia IIC T4 Ga

Ex ia/ib IIC T4 Ga/Gb(1)

Ex ta IIIC T79 °C(2)

-50 °C $\leq T_a \leq$ +70 °C(3)

4-20 mA HART model: U_i = 30 Vdc, I_i = 130 mA, P_i = 1.0 W, L_i = 0 µH, C_i = 7.26 nF

FOUNDATION fieldbus model: U_i = 30 Vdc, I_i = 300 mA, P_i = 1.5 W, L_i = 0 µH, C_i = 4.95 nF

FISCO model: U_i = 17.5 Vdc, I_i = 380 mA, P_i = 5.32 W, L_i < 1 µH, C_i = 4.95 nF

Installation drawing: 9240 030-938.

(1) Valid for the FISCO option only.
(2) +69 °C with FOUNDATION fieldbus or FISCO option.
(3) +60 °C with FOUNDATION fieldbus or FISCO option.

B.2.4 Chinese certifications

National Supervision and Inspection Center for Explosion Protection and Safety of Instrumentation (NEPSI) Approvals

Flameproof

E3 4-20 mA / HART model:

Ex d ia IIC T4 (- 40 °C < T_a < + 70 °C) DIP A20 T_A = 79 °C

FOUNDATION fieldbus model:

Ex d ia IIC T4 (- 40 °C < T_a < + 60 °C) DIP A20 T_A = 69 °C

Intrinsic safety

I3 4-20 mA / HART model:

Ex ia IIC T4 (- 50 °C < T_a < + 70 °C) DIP A20 T_A 79 °C

4-20 mA / HART model: U_i = 30 Vdc, I_i = 130 mA, P_i = 1.0 W, C_i = 7.26 nF, Li ~ 0 µH

FOUNDATION fieldbus model:

Ex ia IIC T4 (- 50 °C < T_a < + 60 °C) DIP A20 T_A 69 °C

U_i = 30 Vdc, I_i = 300 mA, P_i = 1.5 W, C_i = 4.95 nF, Li ~ 0 µH

IC FOUNDATION fieldbus FISCO model:

Ex ia IIC T4 (- 50 °C < T_a < + 60 °C) DIP A20 T_A 69 °C

U_i = 17.5 Vdc, I_i = 380 mA, P_i = 5.32 W, C_i = 4.95 nF, $L_i \leq$ 1 µH

Special conditions for safe use (X):

Refer to Certificate GYJ111230X.

Type n approvals: Non-Sparking/Energy Limited

N3 4-20 mA / HART model:

Ex nA nL IIC T4 Gc (-50 °C < T_a < +70 °C)

U_n = 42.4 V

L_i = 0 µH

FOUNDATION fieldbus model:

Ex nA nL IIC T4 Gc (-50 °C < T_a < +60 °C)

U_n = 32 V

Special conditions for safe use (X):

Refer to Certificate GYJ13.1387.

B.2.5 Japanese certifications

Technology Institution of Industrial Safety (TIIS) Approval

Special conditions for safe use (X):

Refer to certificate TC20104 and TC20192.

Flameproof

E4 Transmitter: Ex d [ia] IIC T4x
-20 ~ +60 °C
Probe: Ex ia IIC T4X

4-20 mA/HART model:
DC 20 - 42.4 V
U_m = 250 V, U_o = 22.2 V, I_o = 177.5 mA, P_o = 0.985 W

FOUNDATION fieldbus model:
DC 16 - 32 V
U_m = 250 V, U_o = 22.2 V, I_o = 177.5 mA, P_o = 0.985 W

Installation drawing: 05300-00548.
Approval valid for the HART and FOUNDATION fieldbus options.

B.2.6 IECEx certifications

IECEx Approval

Flameproof

E7 Ex ia/db ia IIC T4 Ga/Gb (-40 °C ≤ T_a ≤ +70 °C[(1)])

Ex ta IIIC T 79 °C[(2)] (-40 °C ≤ T_a ≤ +60 °C)

IECEx NEM 06.0001X.

U_m = 250 VAC

Approval valid for the HART, FOUNDATION fieldbus, and Modbus options.

Special conditions for safe use (X):

The intrinsically safe circuits do not withstand the 500V AC test as specified in IEC 60079-11 clause 6.4.12.

Impact and friction hazards need to be considered according to EN 60079-0 clause 8.1.2 when the transmitter and part of antennas exposed to the exterior atmosphere of the tank is made with light metal alloys and of category II 1G EPL Ga.

Parts of the rod-antenna and the all PTFE antenna are non-conducting and the area of the non-conducting part exceeds the maximum permissible areas for Group IIC according to IEC 60079-0 clause 7.3: 20 cm^2 for II 2G EPL Gb and 4 cm^2 for II 1G EPL Ga. Therefore, when the antenna is used in a potentially explosive atmosphere, appropriate measures must be taken to prevent electrostatic discharge.

(1) +60 °C with FOUNDATION fieldbus option.
(2) +69 °C with FOUNDATION fieldbus or FISCO option.

Intrinsic safety

Figure B-4. Example approval label: IECEx HART intrinsic safety

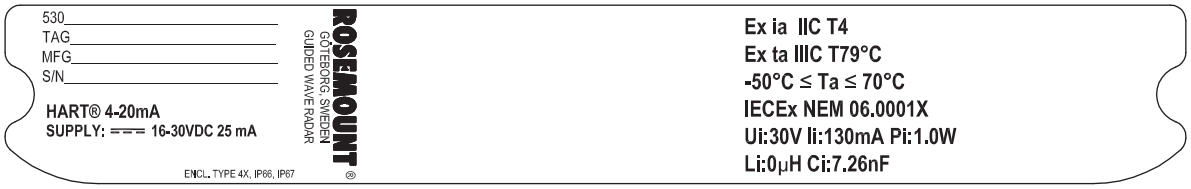

I7, IG Intrinsically Safe

Ex ia IIC T4 (-50 °C ≤ T_a ≤ +70 °C)(1).

IECEx NEM 06.0001X.

4-20 mA/HART: U_i ≤ 30 Vdc, I_i ≤ 130 mA, P_i ≤ 1 W, C_i = 7.26 nF, L_i=0 µH.

FOUNDATION fieldbus: U_i ≤ 30 Vdc, I_i ≤ 300 mA, P_i ≤ 1.5 W, C_i = 4.95 nF, L_i = 0 µH.

FISCO: U_i ≤ 17.5 Vdc, I_i ≤ 380 mA, P_i ≤ 5.32 W, C_i = 4.95 nF, L_i = 0 µH.

Installation drawing: 9240 030-938.

Special conditions for safe use (X):

The intrinsically safe circuits do not withstand the 500V AC test as specified in IEC 60079-11 clause 6.4.12.

Impact and friction hazards need to be considered according to EN 60079-0 clause 8.1.2 when the transmitter and part of antennas exposed to the exterior atmosphere of the tank is made with light metal alloys and of category II 1G EPL Ga.

Parts of the rod-antenna and the all PTFE antenna are non-conducting and the area of the non-conducting part exceeds the maximum permissible areas for Group IIC according to IEC 60079-0 clause 7.3: 20 cm^2 for II 2G EPL Gb and 4 cm^2 for II 1G EPL Ga. Therefore, when the antenna is used in a potentially explosive atmosphere, appropriate measures must be taken to prevent electrostatic discharge.

The Ex ia version of model 5300 FISCO field device may be supplied by an [Ex ib] FISCO power supply when the power supply is certified with three separate safety current limiting devices and voltage limitation which meets the requirements for type Ex ia.

(1) +60 °C with FOUNDATION fieldbus or FISCO option.

Type n approvals: Non-Sparking/Emergy Limited

N7 Ex nA nL IIC T4 (-50 °C < T_a < +70 °C[(1)])
Ex n IIC T4 (-50 °C < T_a < +70 °C[(1)])
IECEx NEM 10.0005
4-20 mA/HART model: U_n = 42.4 V
FOUNDATION fieldbus model: U_n = 32 V
Approval valid for the HART and FOUNDATION fieldbus options.
Installation drawing: 9240031-957.

(1) +60 °C with FOUNDATION fieldbus or FISCO option.

B.2.7 Other certifications

Overfill protection

Cert. No: Z-65.16-476

U1 TÜV-tested and approved by DIBt for overfill protection according to the German WHG regulations

Approval valid for the HART and FOUNDATION fieldbus options.

Suitability for intended use

Compliant with NAMUR NE 95, version 07.07.2006 “Basic Principles of Homologation”.

B.3 Combination approvals

KA ATEX, FM, CSA Flameproof/Explosion-proof
KB ATEX, FM, IECEx Flameproof/Explosion-proof
KC ATEX, CSA, IECEx Flameproof/Explosion-proof
KD FM, CSA, IECEx Flameproof/Explosion-proof
KE ATEX, FM, CSA Intrinsic Safety
KF ATEX, FM, IECEx Intrinsic Safety
KG ATEX, CSA, IECEx Intrinsic Safety
KH FM, CSA, IECEx Intrinsic Safety
KI FISCO - ATEX, FM, CSA Intrinsic Safety
KJ FISCO - ATEX, FM, IECEX Intrinsic Safety
KK FISCO - ATEX, CSA, IECEX Intrinsic Safety
KL FISCO - FM, CSA, IECEX Intrinsic Safety

B.4 Approval drawings

This section contains a FM Approvals System Control Drawing and Canadian Standards Association and IECEx/ATEX Installation Drawings. You must follow the installation guidelines presented in order to maintain certified ratings for installed transmitters.

This section contains the following drawings:

Rosemount drawing 9240 030-936:

System control drawing for hazardous location installation of intrinsically safe FM approved apparatus.

Rosemount drawing 9240 030-937:

Installation drawing for hazardous location installation of CSA approved apparatus.

Rosemount drawing 9240 030-938:

Installation drawing for hazardous location installation of ATEX and IECEx approved apparatus.

Rosemount drawing 9240 031-957:

Installation drawing for hazardous location installation of ATEX and IECEx approved apparatus, type n.

Figure B-5. System control drawing for hazardous location installation of intrinsically safe FM approved apparatus

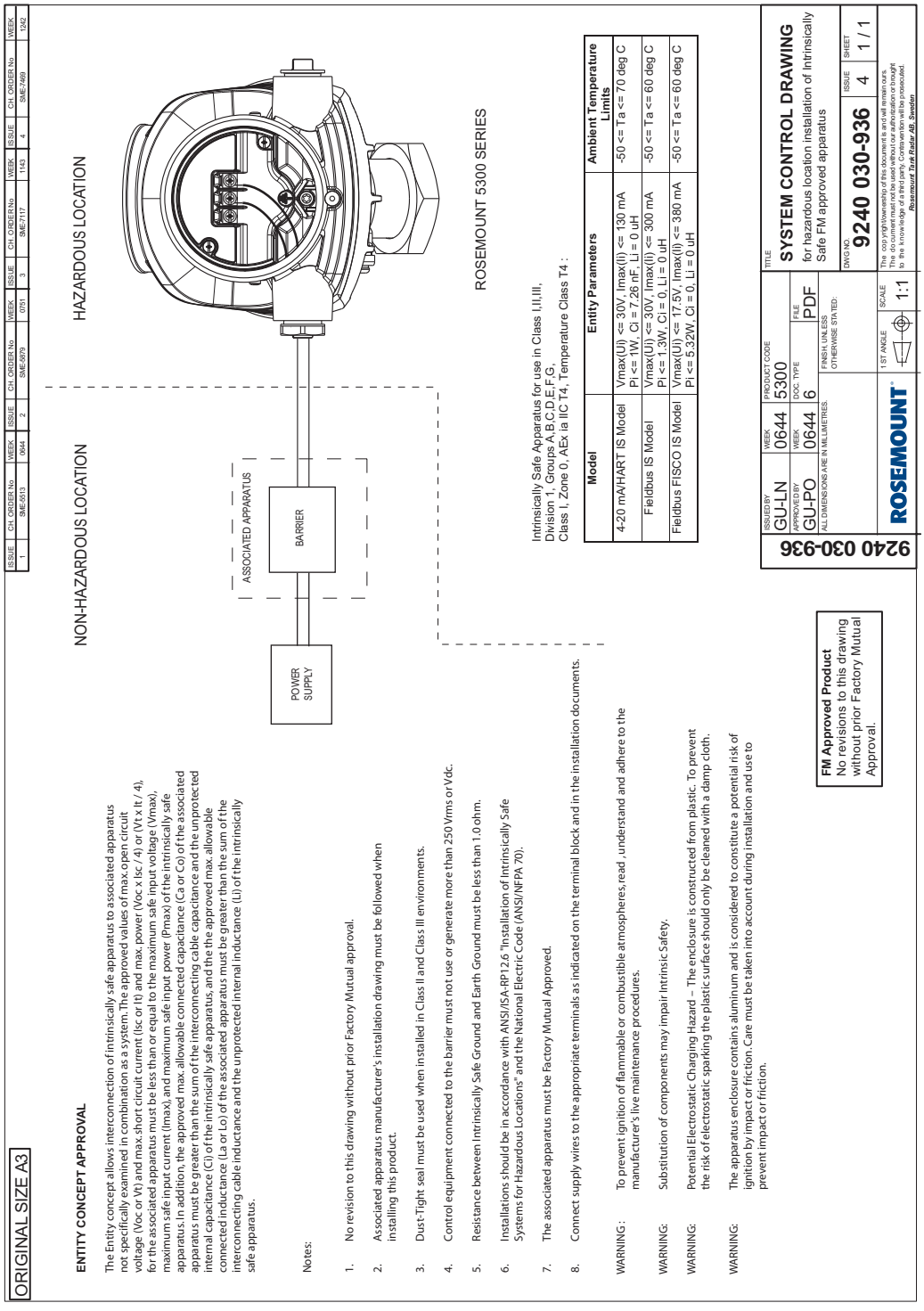

Figure B-6. Installation drawing for hazardous location installation of intrinsically safe CSA approved apparatus

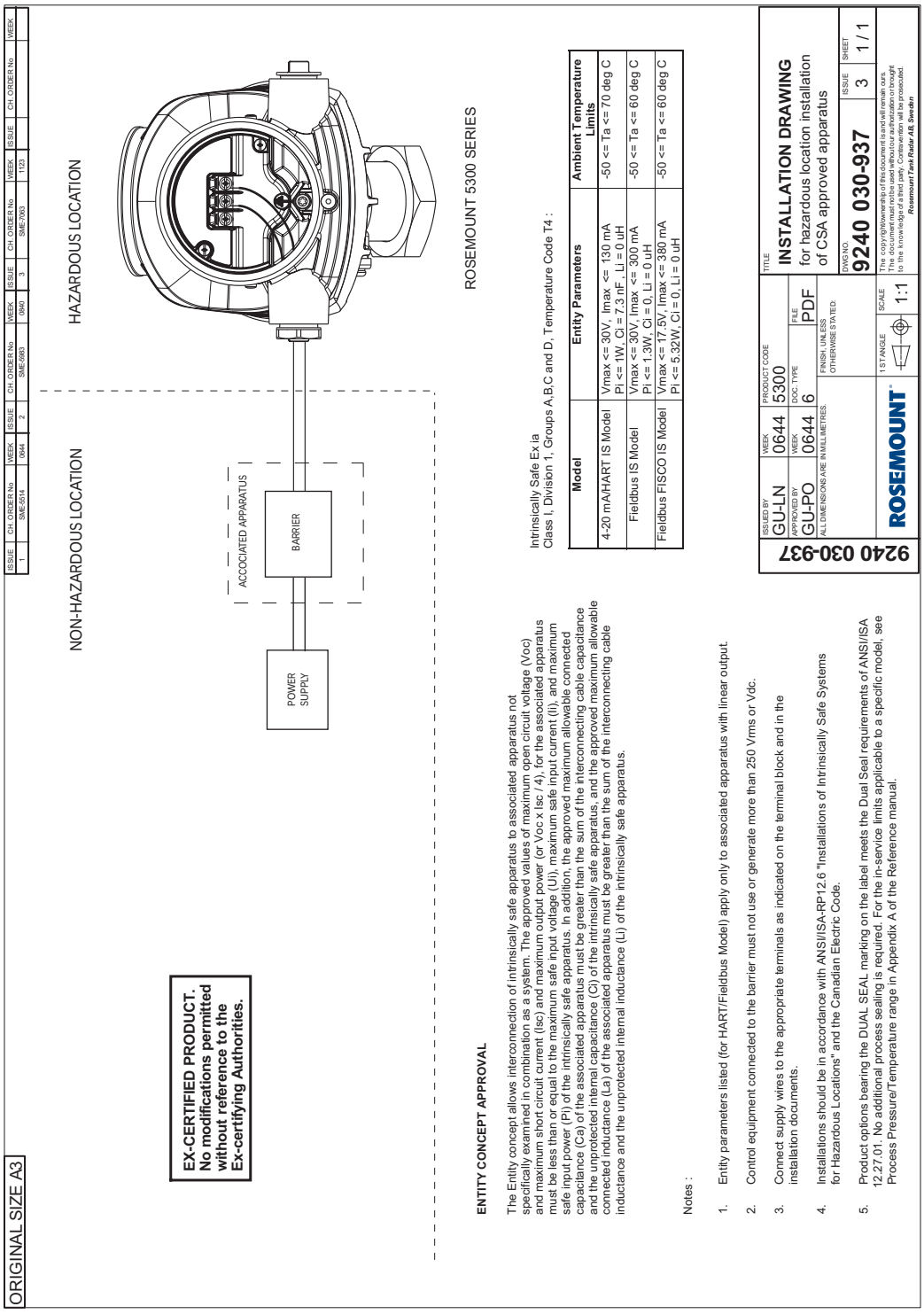

Figure B-7. Installation drawing for hazardous location installation of intrinsically safe ATEX and IECEx approved apparatus

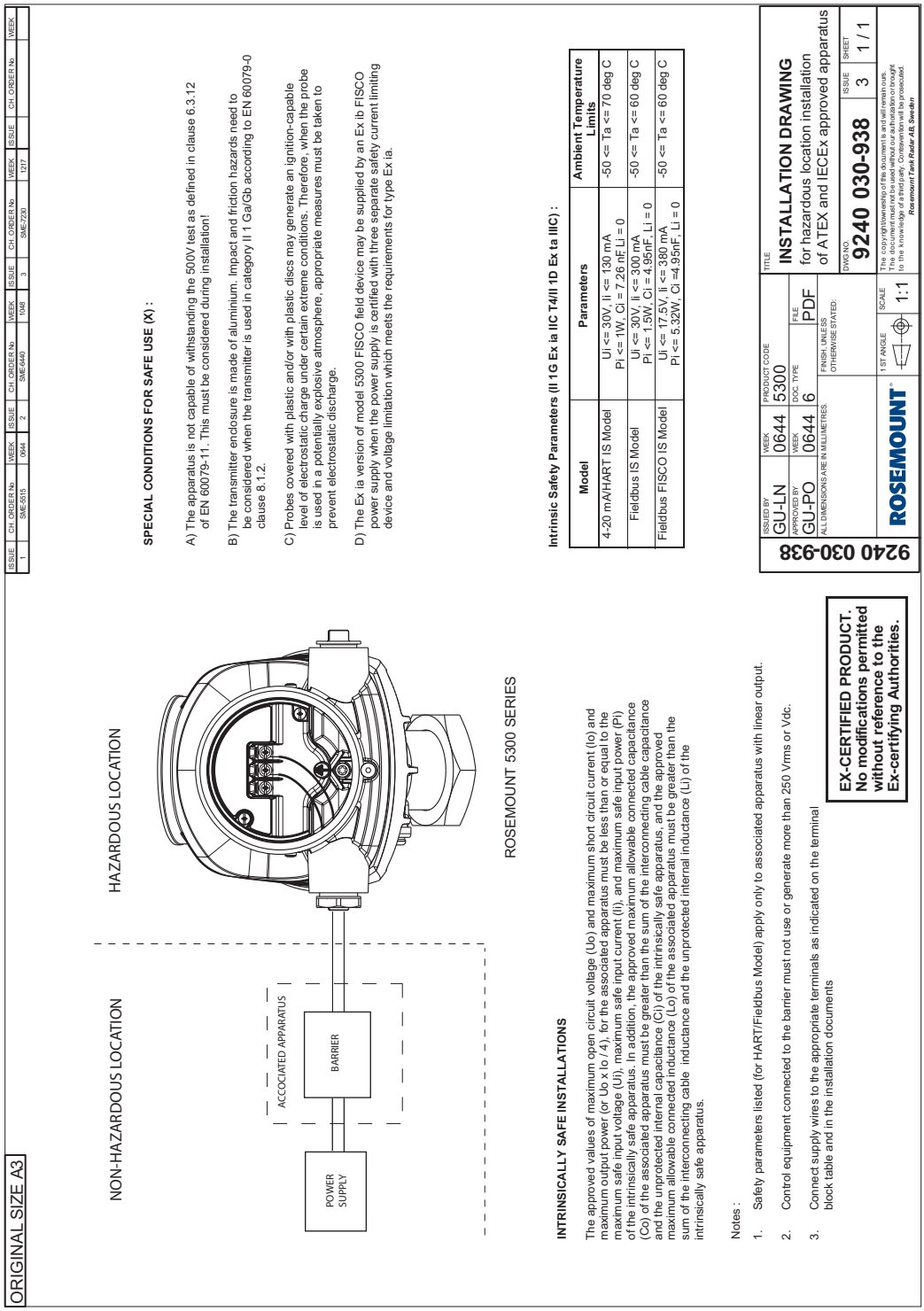

Figure B-8. Installation drawing for hazardous location installation of Non-Incendive ATEX and IECEx approved apparatus

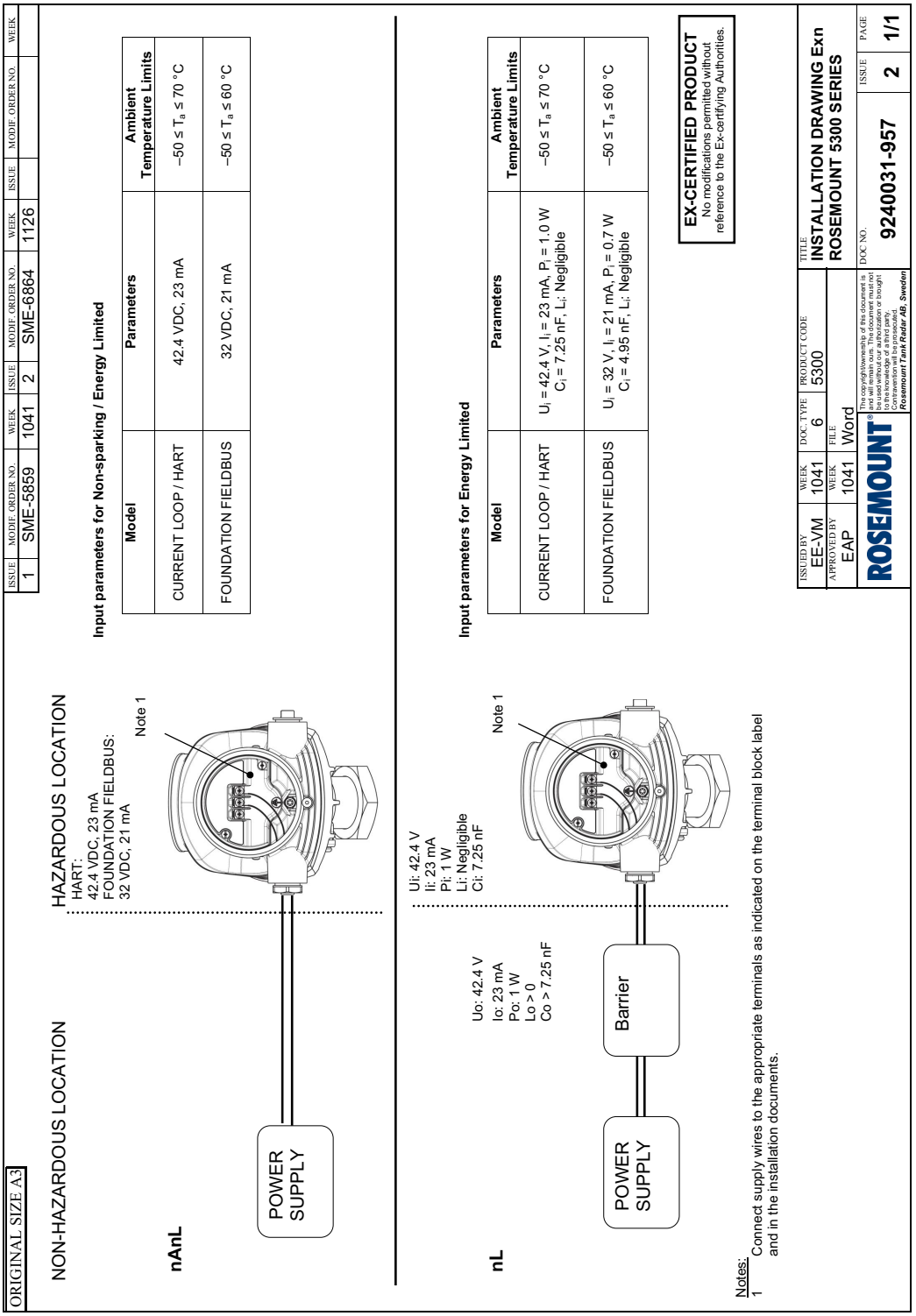

Appendix C Advanced configuration

Safety messages . . . . . page 277
User defined Upper Reference Point . . . . . page 279
Handling of disturbances from nozzle . . . . . page 280
Threshold settings . . . . . page 284
Probe End Projection . . . . . page 290
Echo tracking . . . . . page 292
Dielectric Constant settings . . . . . page 294
Dynamic Vapor Compensation . . . . . page 295
Signal Quality Metrics . . . . . page 304

C.1 Safety messages

Procedures and instructions in this section may require special precautions to ensure the safety of the personnel performing the operations. Information that raises potential safety issues is indicated by a warning symbol (⚠). Please refer to the following safety messages before performing an operation preceded by this symbol.

⚠ WARNING

Explosions could result in death or serious injury.

Verify that the operating environment of the transmitter is consistent with the appropriate hazardous locations certifications.

Before connecting a HART-based communicator in an explosive atmosphere, make sure the instruments in the loop are installed in accordance with intrinsically safe or non-incendive field wiring practices.

Do not remove the transmitter cover in explosive atmospheres when the circuit is alive.

⚠ WARNING

Failure to follow safe installation and servicing guidelines could result in death or serious injury.

Make sure the transmitter is installed by qualified personnel and in accordance with applicable code of practice.

Use the equipment only as specified in this manual. Failure to do so may impair the protection provided by the equipment.

Do not perform any service other than those contained in this manual unless you are qualified.

Any substitution of non-recognized spare parts may jeopardize safety. Repair, for e.g. substitution of components etc. may also jeopardize safety and is under no circumstances allowed.

To prevent ignition of flammable or combustible atmospheres, disconnect power before servicing.

⚠ WARNING

High voltage that may be present on leads could cause electrical shock.

Avoid contact with leads and terminals.

Make sure the mains power to the Radar Transmitter is off and the lines to any other external power source are disconnected or not powered while wiring the transmitter.

Probes covered with plastic and/or with plastic discs may generate an ignition-capable level of electrostatic charge under certain extreme conditions. Therefore, when the probe is used in a potentially explosive atmosphere, appropriate measures must be taken to prevent electrostatic discharge.

C.2 User defined Upper Reference Point

An Upper Reference Point other than the standard Transmitter Reference Point can be specified by setting the *Calibration Offset* parameter as illustrated in Figure C-1:

Figure C-1. The Upper Reference Point can be specified by using the Distance Offset parameter

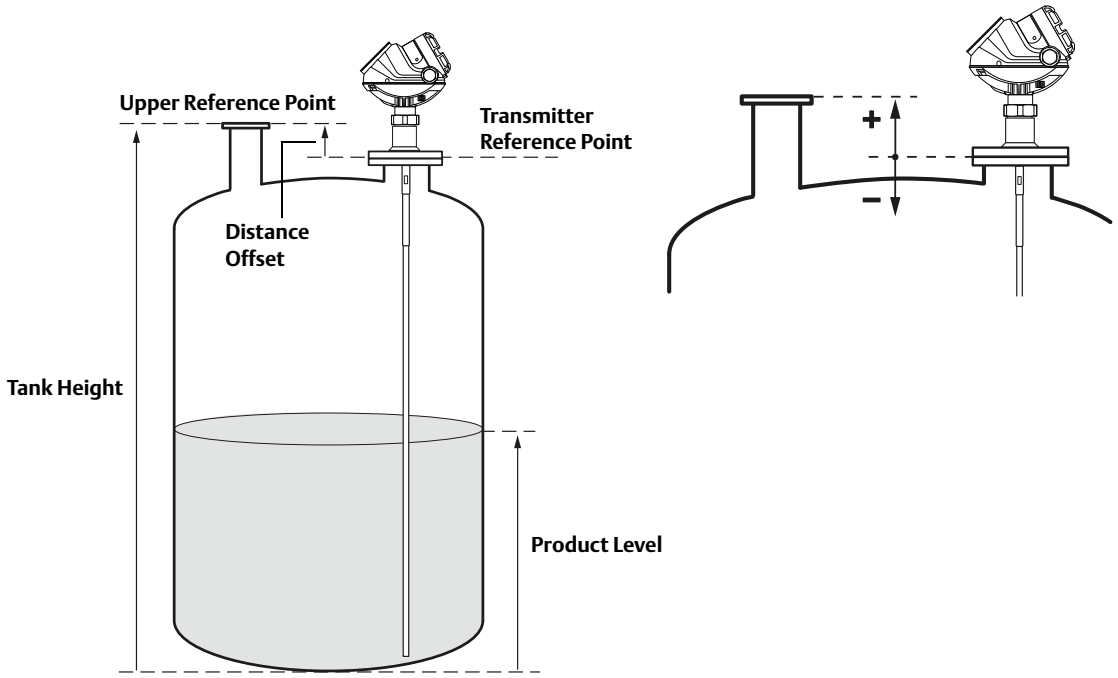

To set the desired upper reference point:

1. Adjust the **Tank Height** to the distance from the tank bottom to the desired **Upper Reference Point**.

2. Add the distance between the **Upper Reference Point** and the **Transmitter Reference Point** to the **Distance Offset** value that is stored in the transmitter database.

   With a Field Communicator the Distance Offset is available as HART Fast Key sequence [2, 3, 2, 4, 2].

   FOUNDATION fieldbus parameter:
   TRANSDUCER 1100 > GEOM_OFFSET_DIST

   The Distance Offset is also available in RRM:

   a. Click the **Tank** icon under Device Config/Setup in the RRM workspace.
   b. In the *Tank* window, select the **Geometry** tab.
   c. Click the **Advanced** button.

C.3 Handling of disturbances from nozzle

C.3.1 Use the Trim Near Zone function

The Trim Near Zone function fine tunes performance in the area close to the tank top (Near Zone). The Near Zone stretches about 40 in. (1 m) into the tank from the lower side of the device flange.

The device will learn how the echo curve in the Near Zone looks like and use this for enhancing accuracy when the surface echo is within the Near Zone. When leaving factory, the near zone measurement has been fine tuned. The factory setting is normally sufficient and does not need to be repeated after installation.

However, since the setting is optimized depending on actual installation, further trimming may be necessary in the case of unfavorable conditions (for instance if there are disturbance echoes caused by the tank nozzle, or if you have exchanged the probe). Trimming means that the measurement performance in the Near Zone is maintained even under these conditions and prevents false echo indication.

NOTE:
The Trim Near Zone function should only be used for reducing impact from stationary disturbances. It is not suitable for occasional disturbances.

Figure C-2. Echo Curve before and after Trim Near Zone

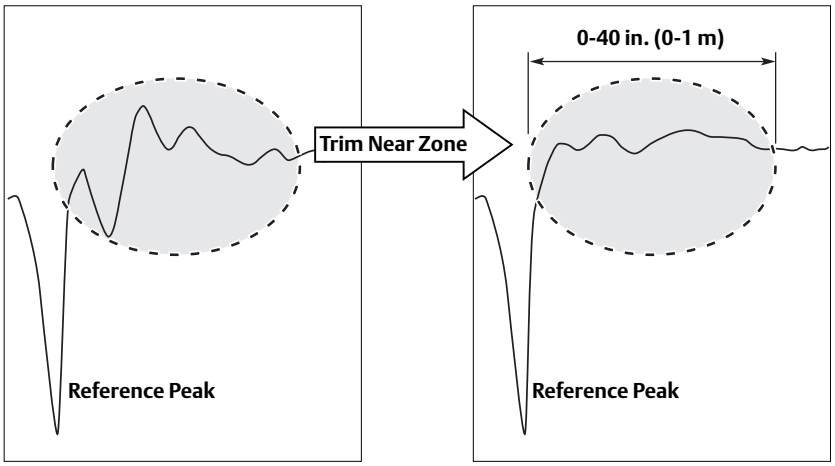

NOTE:
For firmware version 2.A2 or later the Trim Near Zone is not possible in combination with Narrow Nozzles, as defined below:

- 50 mm < Nozzle height ≤ 300 mm
- Nozzle diameter ≤ 2 in. for all single probes except 13 mm single rigid
- Nozzle diameter ≤ 3 in. for 13 mm single rigid

Prerequisites

Before clicking the Trim Near Zone button, ensure that:

- There is product in the tank.
- The product level is below the Near Zone region (0-3.3 ft, 0-1 m) below the Upper Reference Point).
- The ambient temperature is within 104 °F (40 °C) of the expected ambient operating temperature.

Procedure

1. In RRM, select **Setup** > **Advanced** and click the **Near Zone** tab.

   The function can also be reached from **Device specific setup** in the **Guided Setup** (if the command is recommended).
2. Click **Trim Near Zone**.
3. Select **Trim near zone** and click **OK**.
4. Click **OK** in the appearing dialog.
5. When near zone trimming is complete, restart the device.
   - Select **Tools** > **Restart Device**.
6. Restart the transmitter.

To reset the Trim Near Zone function, do the following:

1. Select **Setup** > **Advanced** and click the **Near Zone** tab.
2. Click **Trim Near Zone**.
3. Select **Reset near zone trimming to factory settings** and click **OK**.

Field Communicator

In a Field Communicator, the Trim Near Zone is reached with the [2, 1, 7, 2] HART sequence (if the command is recommended) or from the [2, 7, 1] HART sequence.

Wait 1 minute and restart the transmitter.

C.3.2 Changing the Hold Off Distance/Upper Null Zone

The Hold Off Distance/Upper Null Zone (UNZ) defines how close to the Upper Reference Point a level value is accepted. You can extend the Hold Off Distance/UNZ to block out disturbing echoes close to the tank top, see Figure C-3.

Figure C-3. Hold Off Distance/UNZ

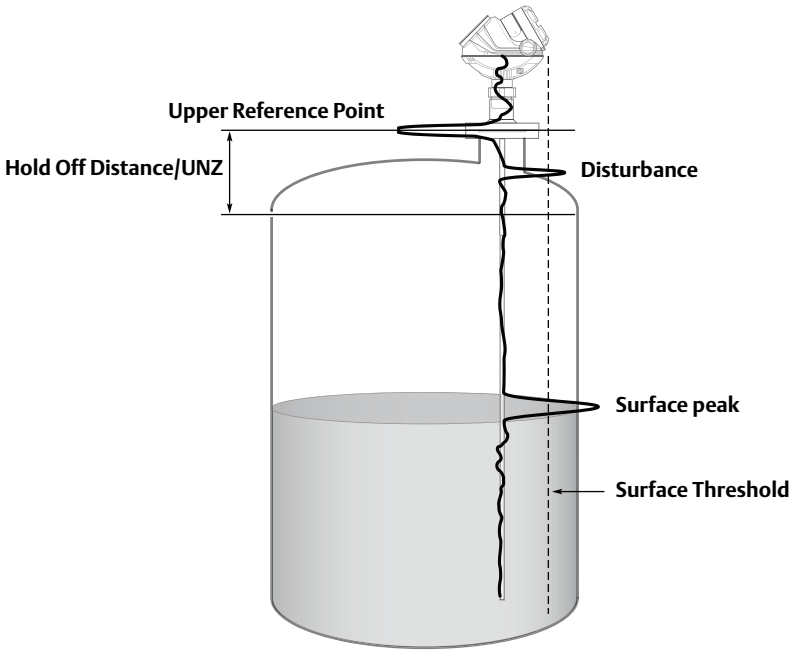

NOTE:
By adjusting the Hold Off Distance/UNZ, the measuring range is reduced.

Use the Echo Curve plot to verify if there are disturbances in the upper part of the tank, see Figure C-4.

Figure C-4. Identifying the Hold Off Distance/UNZ in the Echo Curve plot

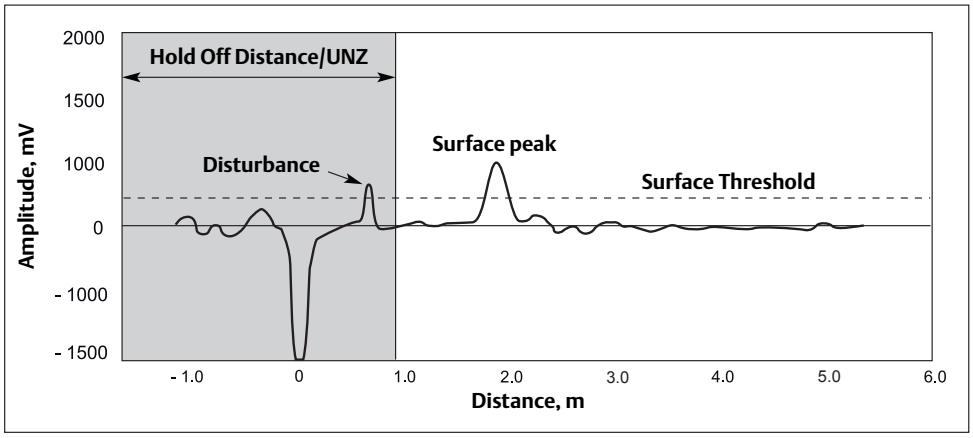

NOTE:
Before changing the Hold Off Distance/Upper Null Zone, check entered value for the high alarm limit. The high alarm limit must be outside the Hold Off Distance/Upper Null Zone.

To set the Hold Off Distance/Upper Null Zone with a Field Communicator:

1. Select the HART command [2, 1, 2, 3].
2. Select the Upper Null Zone option.
3. Enter the desired value.

To set the Hold Off Distance/Upper Null Zone with RRM:

1. Start RRM.
2. Select **Setup** > **Tank**.
3. Select the **Probe** tab.
4. Type the desired value in the *Hold Off Distance/UNZ* field.
5. Click **Store**. Now the Hold Off Distance/Upper Null Zone is stored in the transmitter memory.

C.4 Threshold settings

Measurement with the Rosemount 5300 is based on the fact that the radar signal pulses are reflected by the product surface and the interface between two liquids. Signal amplitude thresholds are used to separate the measurement signal from disturbing echoes and noise. See "Analyzing the measurement signal" on page 139 for more information about threshold principle.

By default, the device automatically calculates threshold values depending on the measurement mode, various dielectric constant values and process conditions that you have configured. Normally, no manual threshold adjustment is needed. But if the transmitter is having difficulties to track for example the product surface, it may be needed to manually adjust the thresholds.

NOTE:
Before manually changing the amplitude thresholds, check that the Upper Product Dielectric Constant parameter is set as accurately as possible. It is used for setting the automatically calculated amplitude thresholds.

Guidelines for setting the Surface Threshold (ATC)

Before changing the Surface Threshold, make sure the product level is at least 20 in. (0.5 m) from the lower side of the device flange.

- Set the Surface Threshold to about 1/3 of the weakest surface echo amplitude in the measuring range.

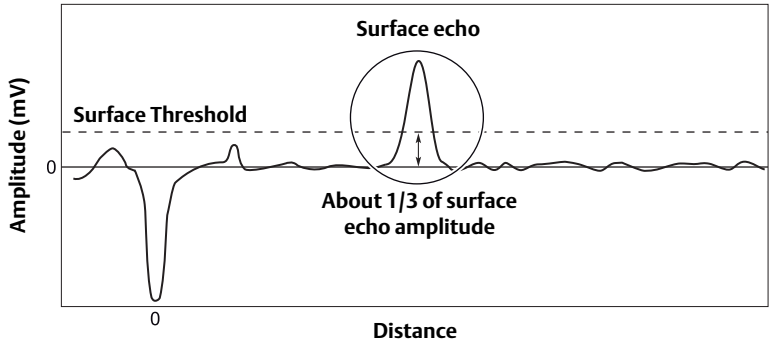

- Surface Thresholds should never be set to values less than:
  - 700 mV at distance 0-20 ft (0-6 m) from the upper reference point.
  - 500 mV at distance more than 20 ft (6 m) from the upper reference point.

- Make sure to include a 500 mV margin between the Surface Threshold and the surface echo amplitude over the entire measuring range.

  For best performance, verify margin by lowering the product surface, or if not possible by using Figure C-5 to Figure C-7.

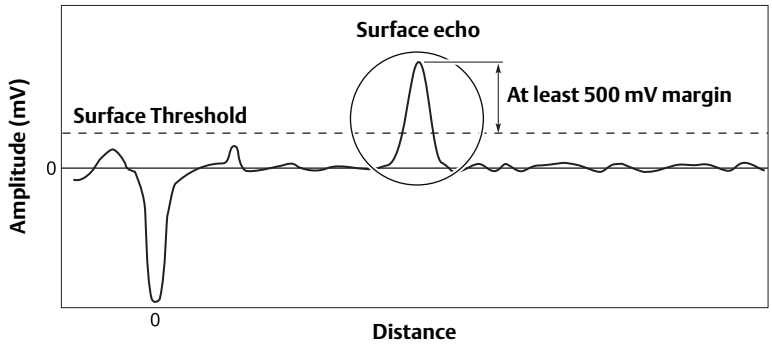

- Surface Threshold should be at least 500 mV greater than the amplitude of disturbances.

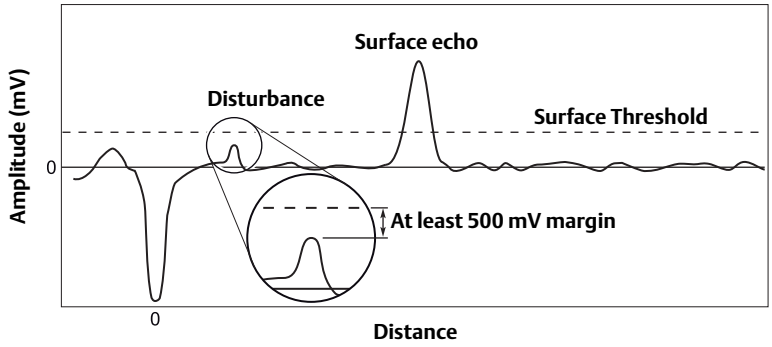

Contact Emerson Process Management Service Department if the transmitter is still having difficulties to track the product surface after applying the guidelines.

Typical surface echo amplitudes and thresholds

Figure C-5 to Figure C-7 shows typical signal amplitude of the surface echo (signal strength) at different distances to the surface. The signal amplitude of the surface echo depends on the dielectric constant of the product. Product with a high dielectric constant (for example water) gives better reflection (a strong signal amplitude) than product with a low dielectric constant (for example oil).

NOTE:
The amplitude of the surface echo is also depended on the distance to the product surface. Since the signal is attenuated along the probe, the surface echo will be strongest close to the tank top, and then weaker further away from the tank top. In addition, the signal amplitude of the surface echo can vary because of product, foam, turbulence, ambient temperature and so on.

The values in Figure C-5 to Figure C-7 are estimations. Significantly different Surface Threshold values may have to be used to handle special tank conditions and applications.

Figure C-5. Typical surface echo amplitude for coaxial probe

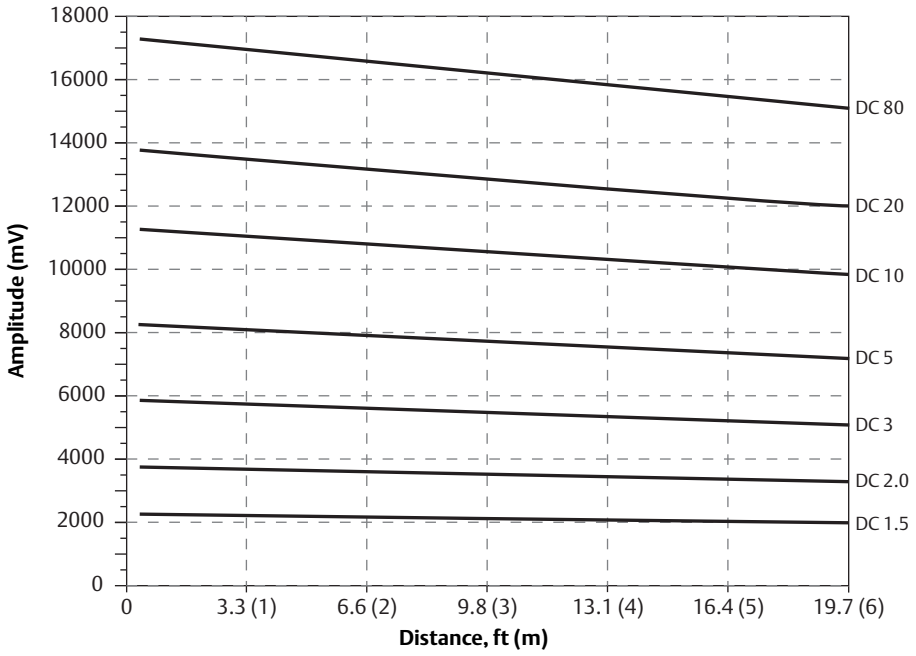

Figure C-6. Typical surface echo amplitude for single lead probes

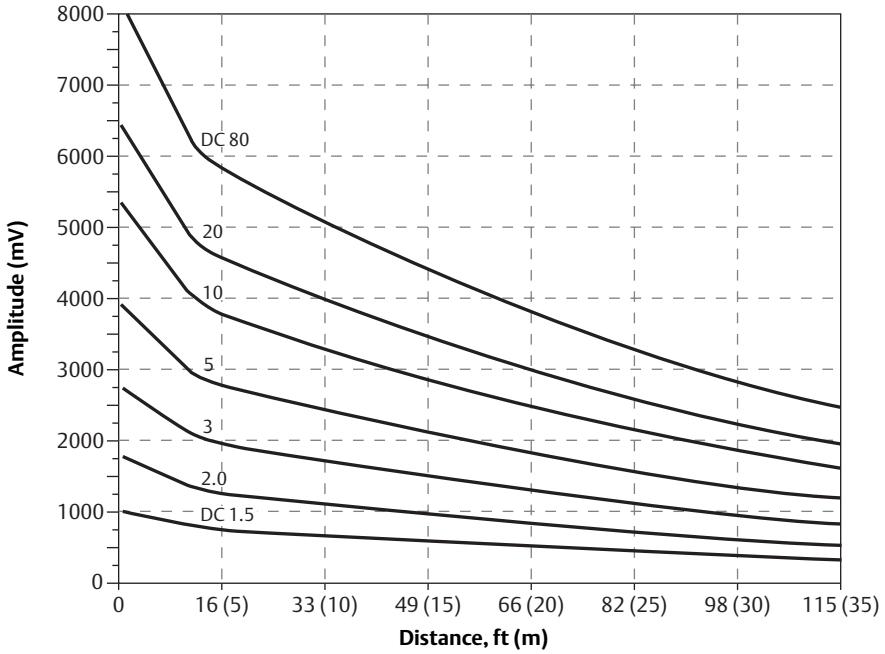

Figure C-7. Typical surface echo amplitude for twin flex probe

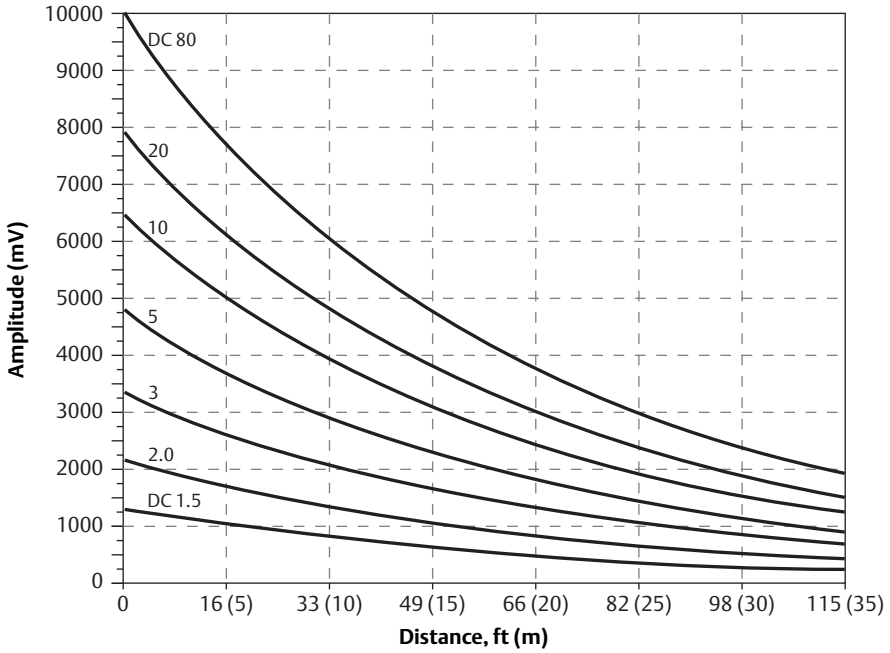

Figure C-8 shows typical surface thresholds for different values of the upper product dielectric constant.

Figure C-8. Typical Surface Threshold values

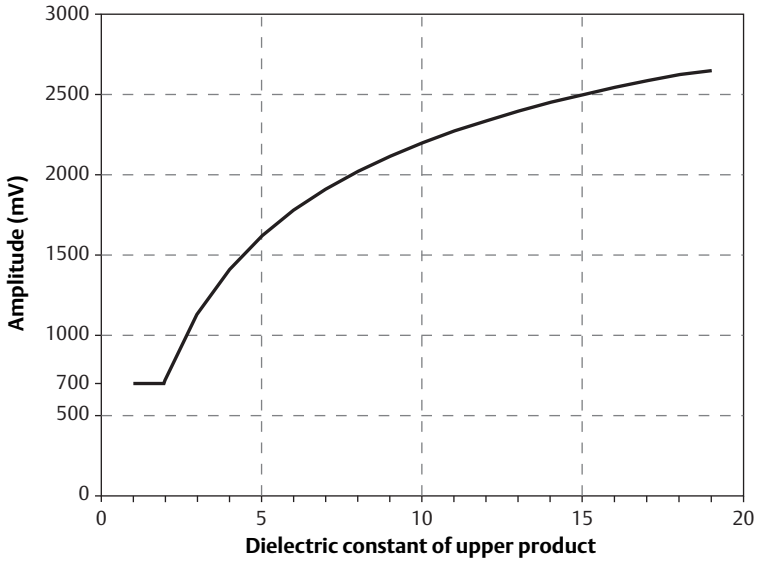

Adjusting thresholds

Normally, the amplitude thresholds are automatically set by the 5300 transmitter, and no manual settings are needed. However, due to the properties of the product, it may in rare cases be necessary to adjust the amplitude thresholds for optimum measurement performance. RRM supports threshold settings in the *Advanced Configuration* window:

1. Click the **Advanced** icon in the Device Config/Setup toolbar.
2. Select the **Thresholds** tab in the *Advanced Configuration* window.

Figure C-9. Threshold settings in RRM

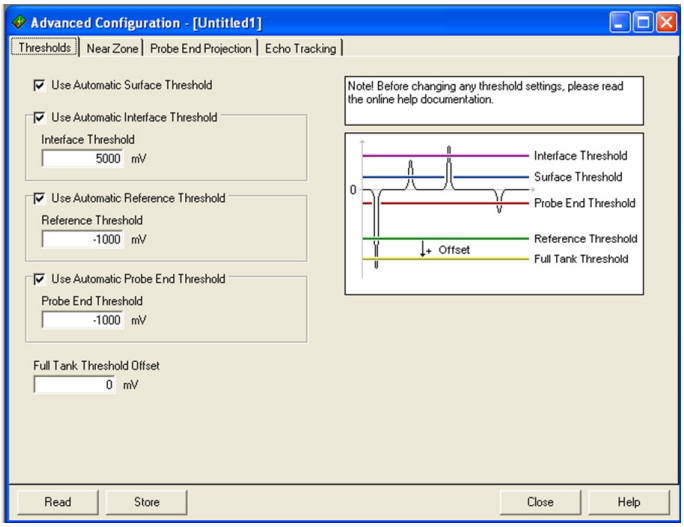

Automatic threshold settings are enabled by default. In the *Advanced Configuration* window the *Interface*, *Reference*, *Probe End* and *Full Tank* thresholds can also be set manually.

Automatic Surface Threshold

When this check-box is selected, the transmitter automatically sets the Surface threshold to a constant value based on the configured Dielectric Constant of the product.

Note that by enabling the Automatic Surface threshold setting, the *Amplitude Threshold Curve* (ATC) is replaced by a constant threshold value. See "Using the echo curve analyzer" on page 140 for more information on how to use the ATC.

The Surface threshold can also be manually set by using the **Set Threshold** function in the *Echo Curve Analyzer/Configuration* Mode window (see "The Configuration Mode tab" on page 142).

Interface Threshold

Amplitude threshold for detection of the Interface level peak.

Reference Threshold

Amplitude threshold for detection of the Reference pulse.

Probe End Threshold

If the Probe End Projection function is used (see "Probe End Projection" on page 290), this threshold may need to be adjusted to make sure that the probe end pulse is properly detected.

Full Tank Threshold Offset

NOTE:
By default, the Full Tank Threshold Offset value is 0 (function is not used). Do not use this function unless you are qualified.

The Full Tank threshold is related to the Reference Threshold, and can be used for detecting that the tank is full. The given offset value determines the gap between the Reference threshold and the Full Tank threshold. The transmitter considers the tank full when the amplitude of the Reference Peak has dropped to a value between the two threshold values.

If the amplitude of the Reference peak is below the Full Tank Threshold (negative amplitude of the Reference peak), the tank is not considered full.

By default, this value is 0 (function is not used). This is because highly contaminated or condensed tank-seals, and turbulent or boiling surfaces, which can cause splashing, may cause function to be triggered.

C.5 Probe End Projection

Probe End Projection is used for two purposes:

- Use the probe end echo as reference, in case the surface echo is lost, to calculate the surface echo position.
- Use the probe end echo as reference when the surface echo is close to the probe end to enhance accuracy of the surface echo position.

By using the Probe End Projection function, the device is capable of measuring the product level even if the surface echo is lost. The Probe End Projection is suited for challenging applications with very poor reflectivity (low dielectric constant). Due to the poor reflectivity of the product, situations may occur where the surface pulse is invisible to the transmitter at long measuring ranges.

If the surface becomes invisible, the device will revert to use the probe end, and the most recently estimated value of the dielectric constant to calculate the surface. Once the surface reappears, the device will immediately use direct measurement on the surface again. The calculated surface value is less accurate than the value with direct measurement.

When the microwaves emitted by the Rosemount 5300 transmitter propagate through the product in the tank, the probe end echo appears to be located below the actual probe end. The apparent displacement of the probe end echo peak is a consequence of the reduced propagation speed of the measurement signal through the product compared to the speed through air. The displacement of the probe end pulse can be observed by using the Echo Curve Analyzer in the Rosemount Radar Master (see “Using the echo curve analyzer” on page 140).

For products with very low dielectric constants the product surface level can be determined by comparing the actual probe end position as given by the Probe Length value, with the apparent position of the probe end echo peak. The difference is related to the properties of the product, i.e. the **Dielectric Constant**, and the distance **D** travelled by the measurement signal through the product, see Figure C-10.

Figure C-10. The properties of the product makes the probe end pulse appear to be below the actual probe end

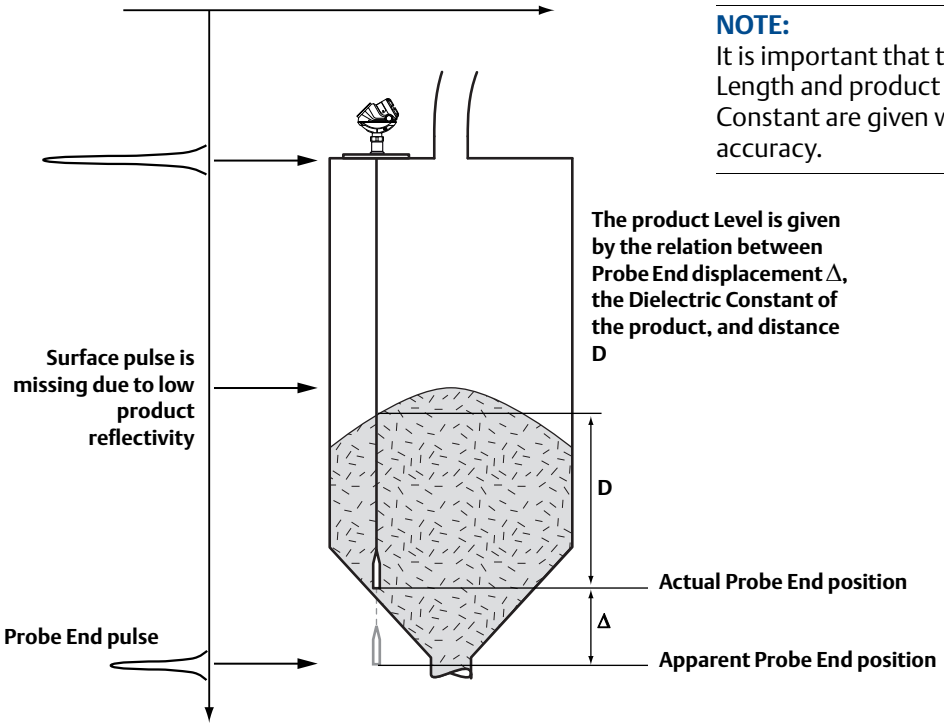

NOTE:
It is important that the Probe Length and product Dielectric Constant are given with high accuracy.

NOTE:
This function is only available for Liquid/solid product **level** measurement modes (i.e. not available for interface or fully submerged interface measurement modes) and a well defined probe end echo (i.e. ensure that the probe end/centering disc/weight is either always in contact with the tank wall or never in contact with the tank wall).

C.5.1 Guided Probe End Projection setup

NOTE:
Assure that the Mounting Type, Probe Type, and Probe Length have been assigned correct values before configuring the Probe End Projection.

Probe End Projection can be configured using a guide. When the tank is empty, the guided setup will be able to accurately calibrate probe end offset and probe end pulse polarity. You will be asked to insert an initial value for the Product DC. This is the value for the product dielectric constant that the device uses as a start point for estimation. This value must be as accurate to the actual value of the dielectric constant as possible.

When the tank is filled, the guided setup will be able to estimate the Product DC. This value is used as an initial value for future estimation of the Product DC.

For best performance, complete the guided setup with an empty tank and then a second time with a filled tank, but do not overwrite the empty tank calibration.

Probe End Projection can be configured in RRM. This function can be reached from the **Device Specific Configuration** in the Guided Setup (if the configuration is recommended) or from the **Advanced Configuration** window, *Probe End Projection* tab. Click **Guided Probe End Projection Setup** to start the configuration.

Figure C-11. Probe End Projection setup

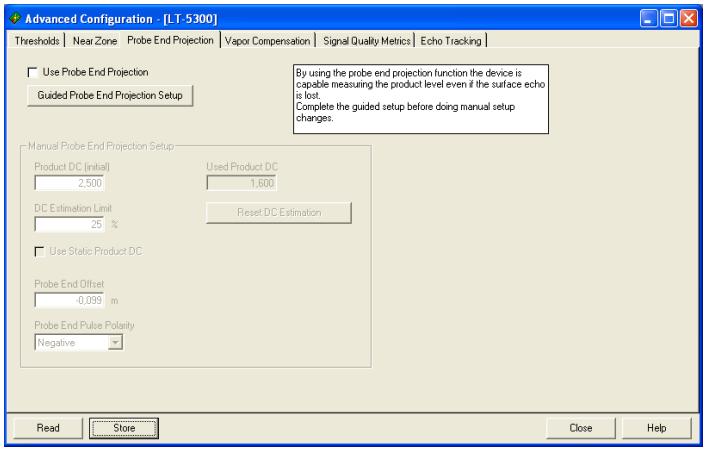

In a Field Communicator, the Device Specific Configuration is reached with sequence [2, 1, 7, 2] (if the configuration is recommended) or from the sequence: [2, 7, 2].

Optional configurations

DC Estimation Limit: This is a limit for the product dielectric constant estimation. The limit is a percentage, saying how much the estimated product DC is allowed to differ from the initial product DC value. If the estimation goes outside this limit, a warning will be generated.

Used Product DC: This is the estimated product dielectric constant that the device will use for Probe End Projection.

Reset DC Estimation: Resets DC estimation to the configured initial value, forcing the device to start over estimating the product DC.

Use Static Product DC: Check this setting if you do not want the device to estimate the product DC. This will force the device to use the configured initial product DC.

C.6 Echo tracking

Measurement with the Rosemount 5300 is based on the fact that the radar signal pulses are reflected by the product surface. Different parameters are used to track the measurement signal to achieve a reliable and stable measurement. Normally, the echo tracking parameters are automatically set by the 5300 transmitter, and no manual settings are needed. However, due to the properties of the product, in rare cases it may be necessary to adjust the echo tracking settings for optimum measurement performance. RRM supports echo tracking settings in the **Advanced Configuration** window, *Echo Tracking* tab.

Figure C-12. Echo Tracking in RRM

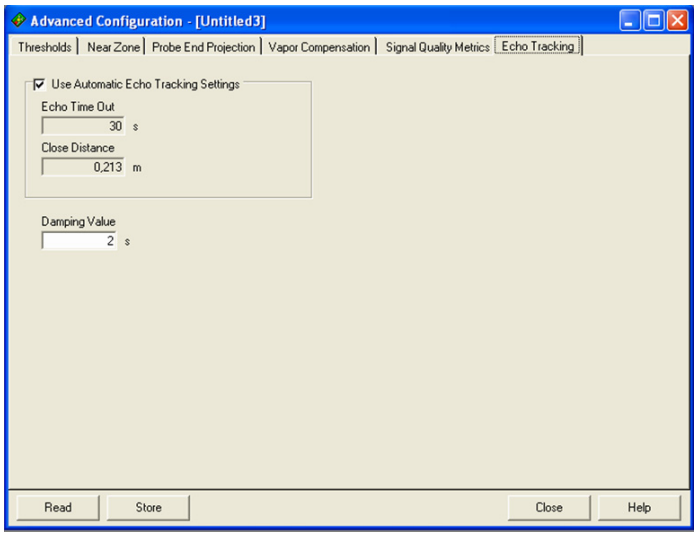

Automatic echo tracking settings are enabled by default. In the Advanced Configuration window the Echo Tracking settings Echo Timeout and Close Distance can be also be set manually.

Use Automatic Echo Tracking Settings

When this check-box is selected, the transmitter automatically sets the echo tracking parameters to a constant value based on the configured tank environment and measurement mode.

Echo Timeout: defines the time in seconds before the device should start to search for a surface echo outside the Close Distance window after it was lost. After an echo was lost, the device does not start searching (or set Invalid Level) until the specified time has elapsed. In some applications, especially with solid products or applications with foam, the surface echo may disappear for periods of time. This value can be increased to prevent the device from entering alarm mode too early after the surface is lost.

Close Distance: defines a window centered at the current surface position where new surface echo candidates can be selected. The size of the window is ±Close Distance. Echoes outside this window will not be considered as surface echoes. The device will without delay jump to the strongest echo within this window. This value can be increased if there are rapid level changes in the tank. If the value is too large the device might select an invalid echo as the surface echo.

Damping

The Damping parameter defines how fast the device reacts to a change of the level value (step response). A high value makes the level steady but the device reacts slowly to level changes in the tank. A low value makes the device react quickly to level changes but the presented level value can be somewhat jumpy. The default value is 2 seconds. Note that increasing the damping value will also prolong the system response time. The damping value can also be changed from the **Output**, *General* tab.

C.7 Dielectric Constant settings

C.7.1 Static Vapor Compensation

In some applications, there is heavy vapor above the product surface having a significant influence on the level measurement, for example, in the case of saturated water steam under high pressure. In such cases, the vapor dielectric can be entered to compensate for this effect.

For applications with a varying pressure and/or temperature, certain models of the Rosemount 5300 Series have a built-in function that automatically compensates for varying vapor dielectric constants. See "Dynamic Vapor Compensation" on page 295.

The default value is equal to 1 which corresponds to the dielectricity of vacuum. Normally this value does not need to be changed since the effect on measurement performance is very small for most vapors.

To change the Vapor Dielectric Constant:

1. Start RRM.
2. Click the **Tank** icon in the RRM workspace, or choose **Tank** from the **Setup** menu.
3. Select the **Environment** tab and click the **Advanced** button.

Figure C-13. Dielectric constants can be adjusted in the Tank Environment window

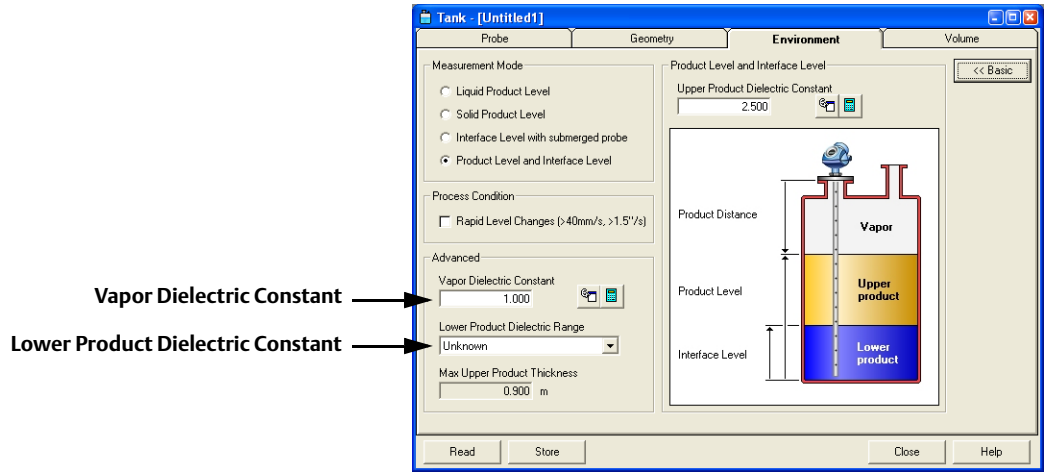

4. Type the desired value in the Vapor Dielectric Constant field. You may also use the Vapor Dielectric Calculator or the Vapor Dielectric Chart to find the correct value.

C.7.2 Lower Product

If the dielectric constant of the lower product is significantly smaller than the dielectric constant of water, you may need to adjust the Lower Product Dielectric Range, see Figure C-13.

Special adjustments can also be made by trimming the appropriate amplitude thresholds. See section "Interface Peak not found" on page 148 for further information.

C.8 Dynamic Vapor Compensation

Rosemount 5300 Series is based on the Time Domain Reflectometry (TDR) technology where low power nanosecond microwave pulses are guided down a probe submerged in the process media. When a radar pulse reaches a media with a different dielectric constant, part of the energy is reflected to the transmitter. The time difference between the transmitted pulse and the reflected pulse is converted into a distance from which the total level or interface level is calculated.

For radar level gauging, the actual measured quantity is the propagation time through the empty space between the radar level transmitter and the liquid surface. For typical radar level transmitter accuracy, the propagation speed of the radar signal should be close to the velocity of light in vacuum. However, in some important cases, the deviation is not negligible and must be taken into account for accuracy. High tank pressure in combination with certain gases is an example.

High pressure water steam can influence radar level transmitter measurements. This is due to the high pressure as well as the polar structure of water molecules. In such cases, the Rosemount 5300 Series Level transmitter can be configured for compensation for this effect.

Water has high critical temperature and pressure (705 °F / 374°C and 3205 psi / 221 bar, respectively). However, Dynamic Vapor Compensation has a maximum temperature and pressure of 676 °F / 358 °C and 2610 psi / 180 bar. Above these limits, level measurement may not be possible since the separation between gas and liquid becomes indistinct.

In a closed vessel containing water liquid and water vapor, existing databases (referred to as a Mollier diagram) have been used to calculate pressure and vapor density, and deduce the dielectric constant of the vapor from this. The dielectric constant changes as given in Figure C-14.

Figure C-14. Dielectric constant versus temperature for saturated water vapor

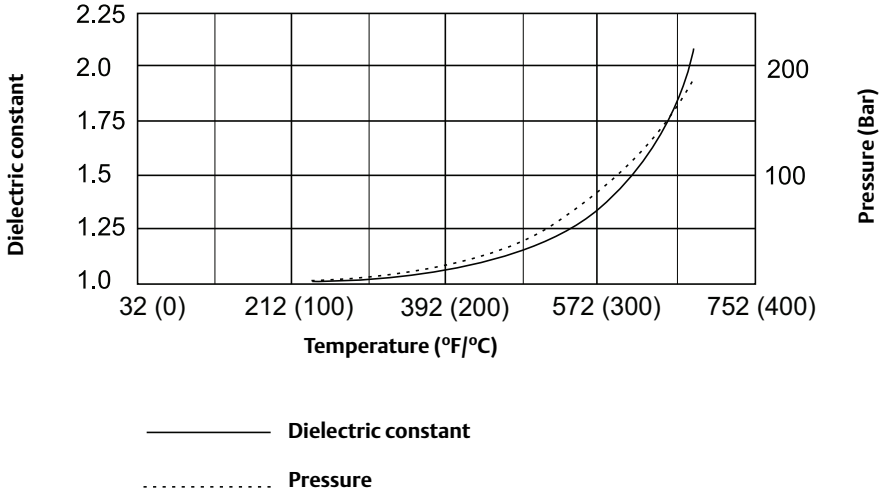

The standard version of a Rosemount 5300 Series level transmitter can be configured for static compensation of vapor by manually entering the dielectric constant of vapor, see "Dielectric Constant settings" on page 294. For applications with a varying pressure and/or temperature,

certain models of the Rosemount 5300 Series have a built-in function (Dynamic Vapor Compensation) that automatically compensates for varying vapor dielectric constants.

The Rosemount 5300 uses a reference reflector mounted on the probe at a certain distance to estimate the dielectric constant of the vapor. The transmitter knows where the reference reflector pulse should have been if there were no vapor present. However, since there is vapor in the tank, the reference reflector pulse will appear beyond the actual reflector point. The distance between the actual reflector point and the apparent reflector point will be used to calculate the vapor dielectric constant. The calculated dielectric constant is then dynamically used to compensate for changes in vapor dielectric constant and eliminates the need to do any compensation in the control system.

C.8.1 Check if Dynamic Vapor Compensation function is supported

To check if the Dynamic Vapor Compensation function is supported, do one of the following:

- Check that 3V or 4U is mentioned in the model code on the transmitter head.

  Model Code: 530xxxxxxx3Vxxxxxxxxx or 530xxxxxxx4Uxxxxxxxxx

- Check the *Device Software Configuration 2* list in Rosemount Radar Master (RRM).

  a. Start Rosemount Radar Master (RRM) and connect to device.

  b. Right-click on the device and select **Properties**.

  c. Check that "Vapor Compensation" is mentioned in the *Device Software Configuration 2* list.

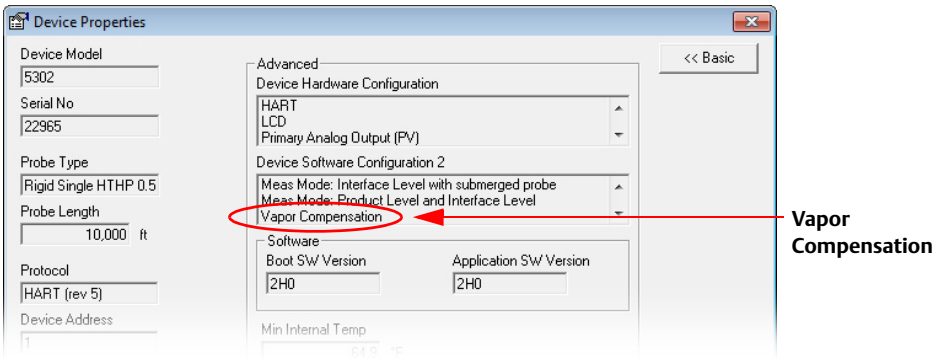

In Field Communicator, if Vapor Compensation is supported, it can be found with the [3, 2, 2, 1] HART Fast Key Sequence.

NOTE:
Vapor compensation is supported for Product Level measurement mode only.

C.8.2 Review installation guidelines

The following installation guidelines should be considered when mounting the transmitter:

- Only probe type 3V or 4U must be used. Check the “VC” and “R3” marking on the seal.

Probe type 3V (coaxial) for 3-4 in. chambers

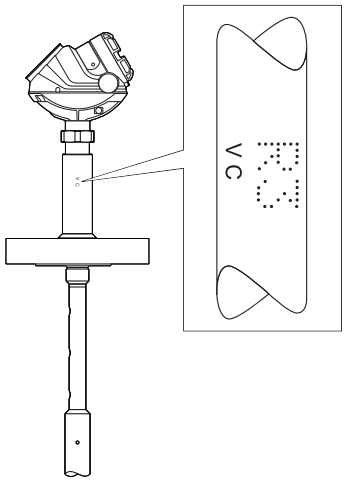

Probe type 4U (rigid single) for 2 in. chambers

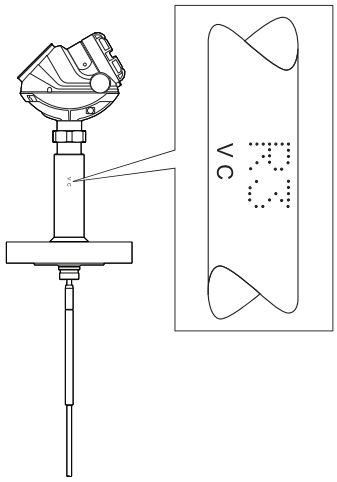

- The maximum probe length is 13.1 ft (4 m) for probe type 3V and 7.5 ft (2.3 m) for probe type 4U.
- Pipe/Chamber is the only supported mounting type. See below for supported pipe inner diameters:

Probe type	Chamber size	Supported pipe inner diameter
3V	3 to 4 in.	Minimum 2 in. (50 mm)
4U	2 in.	1.5 to 2.05 in. (38 to 52 mm)

- Probe End Projection is disabled when Vapor Compensation is enabled.
- Trim Near Zone shall not be used when Dynamic Vapor Compensation is used.

- Dynamic Vapor Compensation requires a minimum distance X from the flange to the surface level to measure the change in the vapor dielectric constant. If the level rises within this area, the unit switches over to static compensation, using the last known vapor dielectric constant.

Reference reflector type			Minimum distance X
Length		Option code(1)	
Short	14 in. (350 mm)	R1	22 in. (560 mm)
Long	20 in. (500 mm)	R2	28 in. (710 mm)

(1) Check model code on the transmitter label.

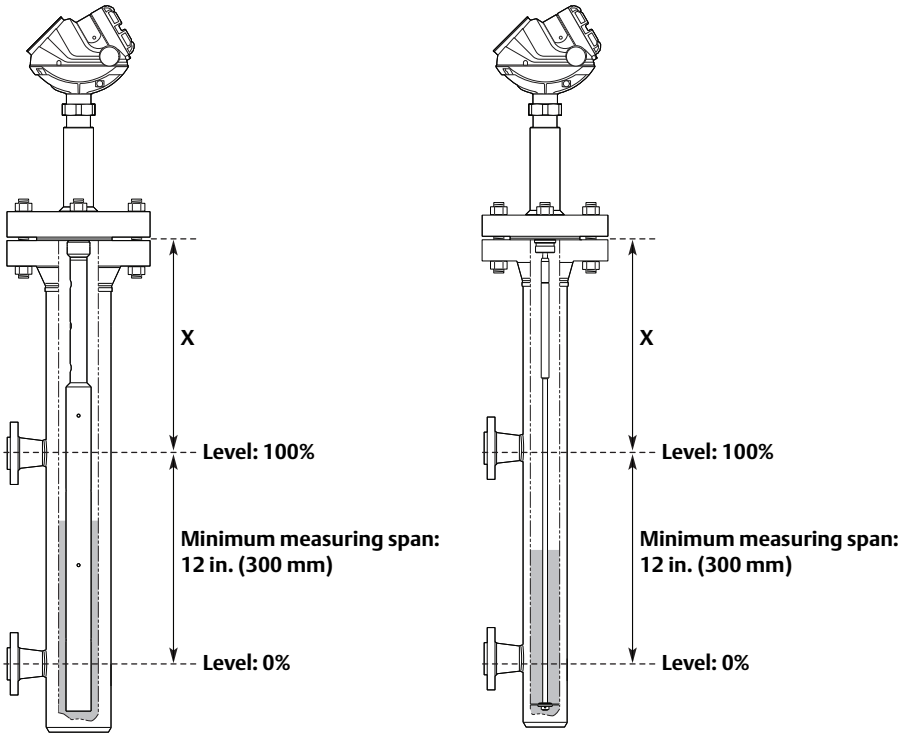

- The minimum measuring span for the Dynamic Vapor Compensation functionality is 12 in. (300 mm).
- The long reflector, 20 in. (500 mm), has the best accuracy and is recommended for all chambers where the dimensions of the chamber allow for it.
- If the distance from the flange to the upper inlet is less than 28 in. (710 mm), the short reflector should be chosen. This distance is a minimum when dynamic compensation is required within the whole measuring range from the lower to the upper inlet. If this is not required, the long reflector can be used and dynamic compensation is possible up to 28 in. (710 mm) from the flange.

- If a 5300 Series GWR transmitter is ordered from Rosemount together with a 9901 Chamber, these space requirements are met by using the option code G1 or G2 for the chamber. G1 is used with the short reference reflector and G2 is used with the long reference reflector.

  If an existing chamber is used, which does not meet these space requirements, a spool piece can be added. For the 4U probe, the spool piece needs to be at least 2 in. (50 mm) longer or shorter than the reference reflector, to ensure that there are no disturbances from welds close to the reference reflector end. For a spool piece with the 3V probe, this is not a requirement.

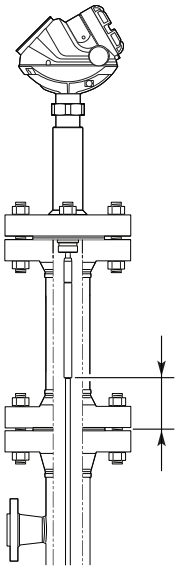

For the 4U probe, the spool piece needs to be at least 2 in. (50 mm) longer or shorter than the reference reflector.

For a spool piece with the 3V probe, this is not a requirement.

C.8.3 Calibrate Dynamic Vapor Compensation function

Check if calibration is needed on-site

Type	Action
Probe type 3V (coaxial) without remote housing	The Dynamic Vapor Compensation function of this Rosemount 5300 Series transmitter has been calibrated at factory. Calibration is only needed if: ■ The transmitter is reset to factory settings. Reset removes pre-calibration of the Dynamic Vapor Compensation function. ■ A spare or replacement Rosemount 5300 transmitter head is mounted on the supplied Dynamic Vapor Compensation probe.
Probe type 3V (coaxial) with remote housing	Calibration is always needed on-site during the commission phase.
Probe type 4U (rigid single)	

NOTE:
When installing a device with Dynamic Vapor Compensation, do not upload a backup file from another device.

Prepare for calibration

- The surface level must be at least 20 in. (0.5 m) below the end of the reference reflector. (It is recommended to empty the chamber.)

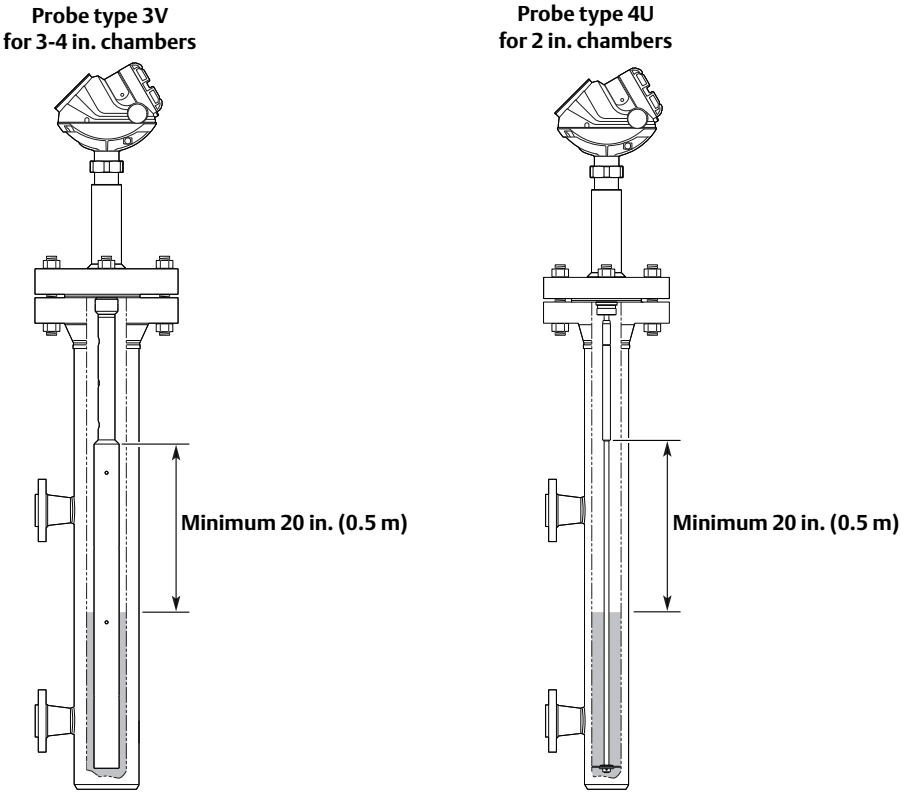

- Perform the calibration at ambient pressure and temperature conditions, i.e. when the vapor dielectric constant is close to 1.

Perform calibration

NOTE:
When using remote housing, make sure it is fully assembled before calibrating the Vapor Compensation function.

Calibrate with Field Communicator

In Field Communicator, the calibration can be done by HART Fast Key Sequence [2, 7, 3].

Calibrate with Device Descriptors (DDs)

Device Descriptors (DDs) are used in host systems to configure and troubleshoot devices. Before calibrating the Dynamic Vapor Compensation function, make sure the latest DD is installed. The latest DD version is available at: www.emersonprocess.com/devicefiles

Procedure

To perform the calibration in Device Descriptors (DDs) or Rosemount Radar Master (RRM), do the following:

5. Verify that the basic configuration for device has been performed.

6. Make sure the correct probe type is selected.
   a. *RRM*: Select **Setup** > **Tank**.
      DD: Select **Configure/Setup** > **Tank**.
   b. Click the **Probe** tab.
   c. In the *Probe type* list, select **Coaxial HTHP** for probe type 3V and **Rigid Single HTHP 0.3″ (8mm)** for probe type 4U.
   d. *RRM*: Click **Store**.
      DD: Click **Send**.

7. Check that Mounting Type is set to Pipe/Chamber and select inner diameter.
   a. *RRM*: Select **Setup** > **Tank**.
      DD: Select **Configure/Setup** > **Tank**.
   b. Click the **Geometry** tab.
   c. In the *Mounting Type* list, select **Pipe/Chamber**.
   d. *DD*: Click **Send**.
   e. In the *Inner Diameter, Pipe/Chamber/Nozzle list*, select the corresponding inner diameter.
   f. *RRM*: Click **Store**.
      DD: Click **Send**.

8. RRM: Select **Setup** > **Advanced**.
   DD: Select **Configure/Setup** > **Advanced**.

9. Click the **Vapor Compensation** tab.

10. Make sure the correct reflector type is selected.
    a. In the *Reference Reflector Type* list, select reference reflector according to table below.

Probe type	Reference reflector type		
	Length	**RRM parameter**	**DD parameter**
3V	Short	Coax, l=350 mm	Coax l=350mm (RR B3 in old DD versions)
	Long	Coax, l=500 mm	Coax l=500mm (RR B4 in old DD versions)
4U	Short	d=13 mm, l=350 mm	d=13 mm, l=350 mm (RR A6 in old DD versions)
	Long	d=13 mm, l=500 mm	d=13 mm, l=500 mm (RR B2 in old DD versions)

    b. *RRM*: Click **Store**.
       DD: Click **Send**.

11. *RRM*: Select the **Use Vapor Compensation** checkbox. Then click **Store**.
    DD: Select the **Use Vapor Compensation** checkbox. Then click **Send**.

12. Click the **Calibrate Vapor Compensation** button, and follow the on-screen instructions.

13. When the calibration is finished, restart the device.

    - *RRM*: Select **Tools** > **Restart Device**.
      DD: Select **Configure/Setup** > **Basic Setup**. On the **7. Finish tab**, click **Restart Device**.

14. Verify that the echo peak from the reference reflector is marked in the echo curve plot.
    a. In RRM, Select **Setup** > **Echo Curve**.
    b. If the echo curve is not read automatically, click **Read**.
    c. Verify that the echo peak from the reference reflector is marked "P2 Reference Reflector" in the echo curve plot, as illustrated in Figure C-15.

       Probes will have the reflector end either at 1.1 ft. (0.35 m) or at 1.6 ft. (0.5 m), depending on if the probe has a short or a long reflector.

Figure C-15. Echo curve showing echo peak from reference reflector (plot from 2 inch chamber with short reference reflector)

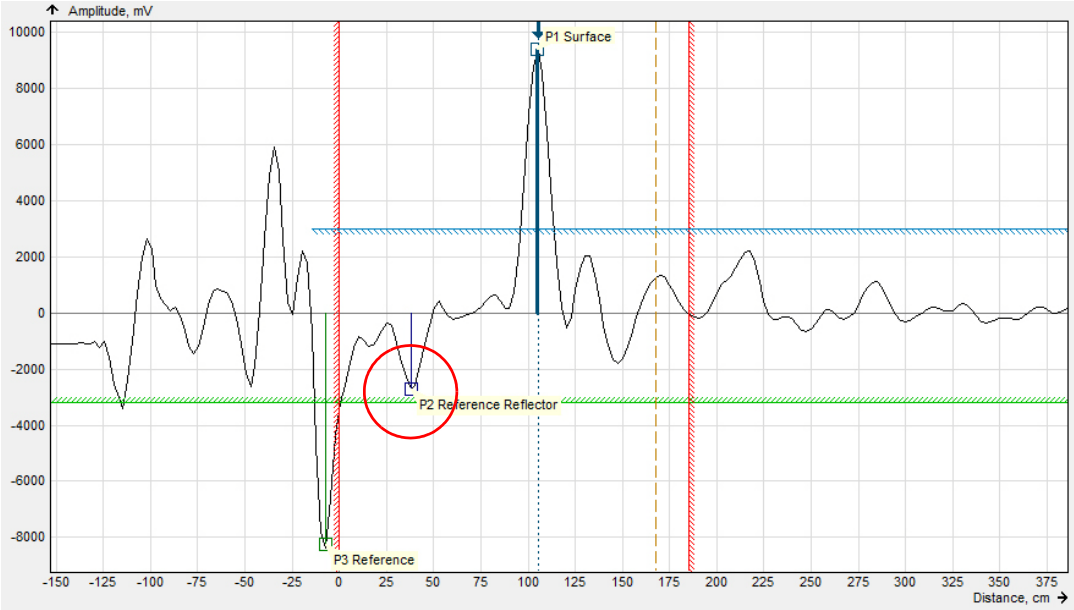

NOTE:
When the Dynamic Vapor Compensation function has been calibrated, ensure to keep the Probe Type, Mounting Type, Inner Diameter, Reference Reflector Type, and remote connection (if used) set as they were during calibration.

If changing the configuration of these parameters, the Dynamic Vapor Compensation function will be deactivated, and the device error "Vapor Compensation Not Factory Calibrated" appears. Correct the parameter that has been changed, and restart the device.

C.9 Signal Quality Metrics

Signal Quality Metrics indicates the surface signal integrity compared to the noise. It can be used to schedule maintenance to clean the probe or detect and monitor turbulence, boiling, foam and emulsions.

Figure C-16. Echo curve showing surface peak amplitude, noise peak amplitude, and surface threshold

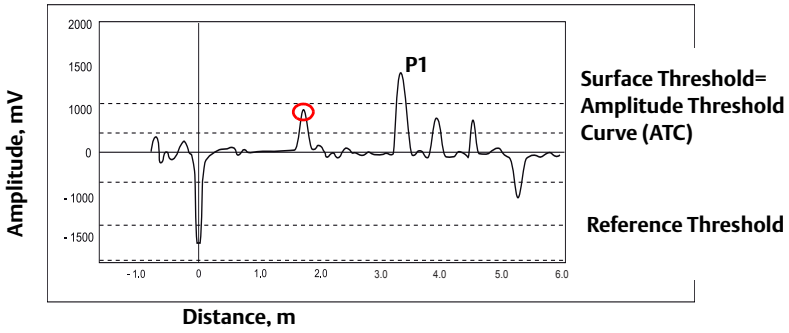

The following diagnostics measurements are available:

Signal Quality is a measurement of the surface peak amplitude (P1) compared to the surface threshold (ATC) and the smallest marginal between the noise and the ATC above the surface (indicated with a circle) compared to the ATC.

The Signal Quality spans from 0 to 10, where 0 indicates a low margin, and 10 indicates a high margin. It indicates how much margin there is until the noise peak is indicated as the surface level.

Surface / Noise Margin is the relationship between surface peak amplitude and the amplitude of the strongest noise peak above the surface. The Surface / Noise Margin spans from 0 to 10, where 0 indicates a low margin, and 10 indicates a high margin. It indicates how much disturbance the device can handle in the tank.

NOTE:
The signal amplitude and the noise margin depend on probe type and application conditions, as well as the condition of the probe. Even if the probe is clean, Signal Quality and Surface / Noise Margin may not be a 10.

To check if Signal Quality Metrics is supported, do one of the following:

- If “DA1” or “D01” is mentioned in the model code on the label, the device supports Signal Quality Metrics.

  Model Code: 530xxxxxxxxxxxxxxxxDA1 or 530xxxxxxxxxxxxxxxxD01xx

- In RRM:

  1. Connect to the device.
  2. Right click on the device and select **Properties**.

Figure C-17. Check if Signal Quality Metrics is supported

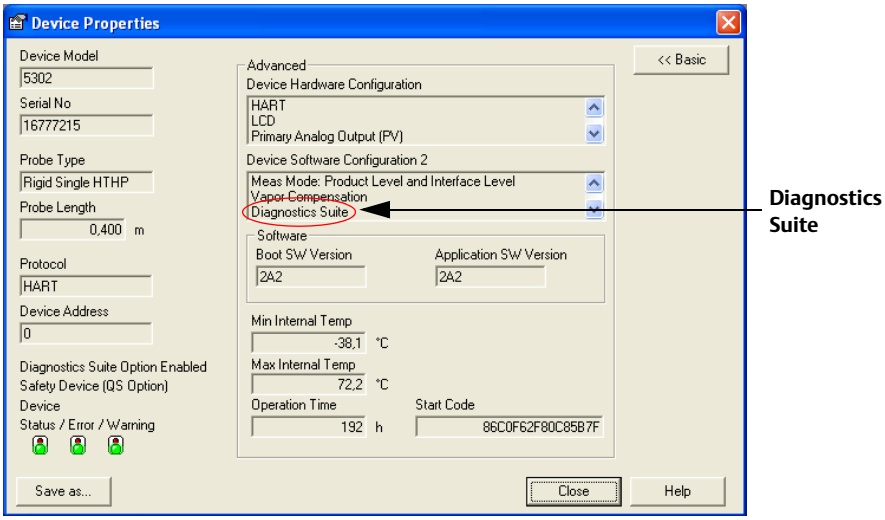

3. If "Diagnostics Suite" is mentioned in the *Device Software Configuration 2* list, the device supports Signal Quality Metrics.

- In a Field Communicator, if Signal Quality Metrics is supported, it can be found with the [3, 2, 2, 1] sequence. Check if "Diagnostics Suite" is present

Signal Quality Metrics can be enabled/disabled in RRM. Select **Setup** > **Advanced** and click the **Signal Quality Metrics** tab.

NOTE:
If Signal Quality Metrics is not supported or disabled, the Signal Quality and Surface / Noise Margin will always be set to 0.

C.9.1 Viewing Signal Quality Metrics in RRM

To view Signal Quality Metrics in RRM, select **Tools** > **Device Display** and click the **Signal Quality Metrics** tab.

Figure C-18. View Signal Quality Metrics Values

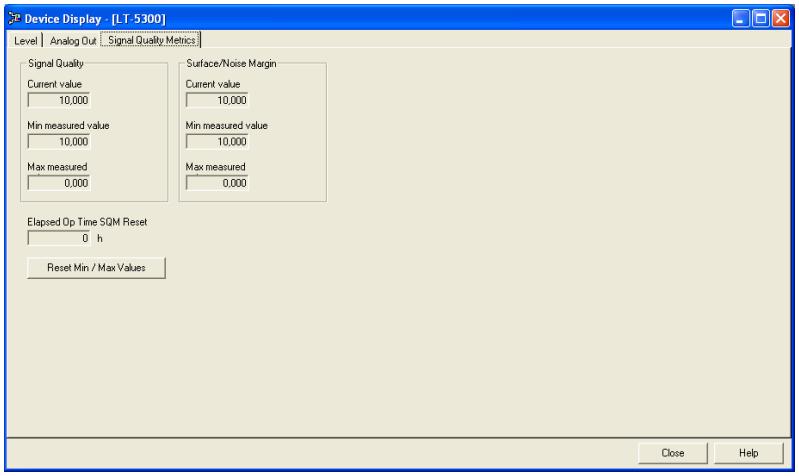

Signal Quality Metrics can be shown on the LCD panel. See "Specifying display panel variables" on page 129.

Signal Quality Metrics can be assigned to Transmitter Variables (SV, TV, or QV). In RRM, this can be done by selecting **Setup** > **Output** from the menu.

Figure C-19. Configure Transmitter Variables for Signal Quality Metrics

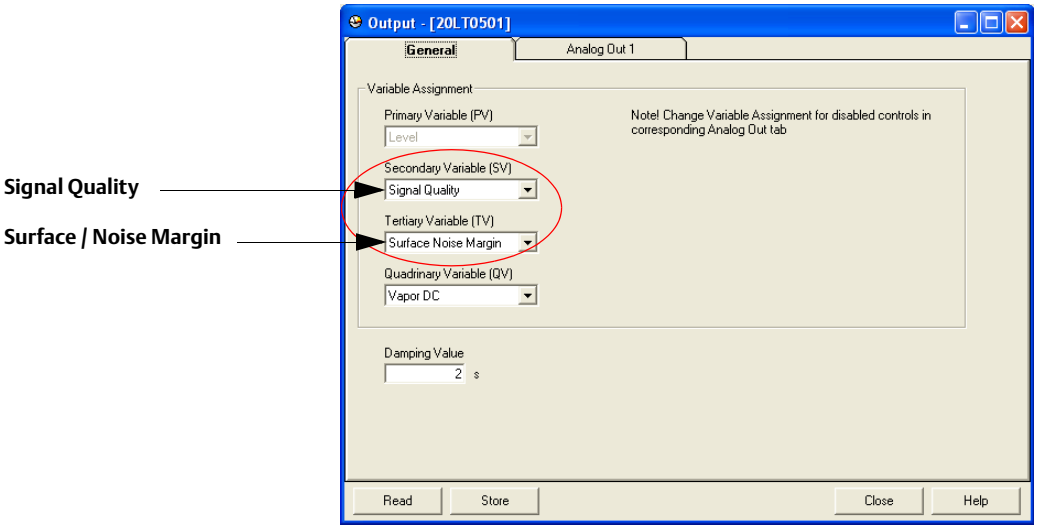

Variables can be sent to Distributed Control System (DCS) to trigger an alarm. Suitable trigger levels vary from application to application. Guidelines for appropriate values can be determined by logging Signal Quality Metrics over time and viewing minimum/maximum values. The Signal Quality alarm trigger value should be at least 1, but a better guideline is 2-3.

Appendix D Remote mounting

Remote housing, new units . . . . . **page 307**
Remote connection, field retrofit . . . . . **page 309**
Remote housing configuration . . . . . **page 310**

D.1 Remote housing, new units

Remote Housing can be used to place the head apart from the probe if it is in a hot or vibrating place. With Remote Housing, you can place the transmitter head in a better position to be able to read the display, for example.

The remote housing assembly is shipped with the transmitter head mounted on the probe and the remote connection in a separate box.

The transmitter head must have the remote connection installed before functioning.

The parts in the shipping unit consist of:

- Transmitter head mounted on probe
- Remote connection
- Bracket kit
  - Bracket (1 pcs)
  - Clamping bracket (4 pcs)
  - U-bolt (2 pcs)
  - M6 screw (3 pcs)
  - M6 nut (4 pcs)

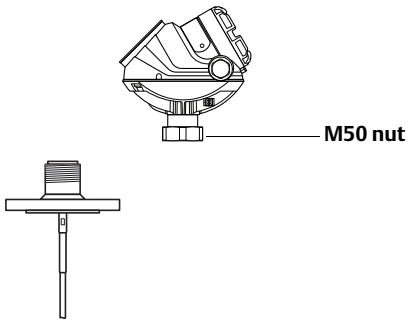

Remove the transmitter head from the probe

Remove the transmitter head from the probe by unscrewing the M50 nut.

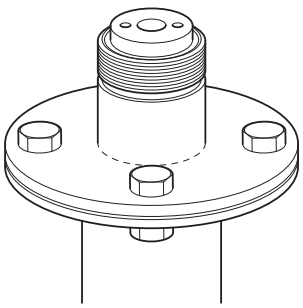

Mount the probe in the tank

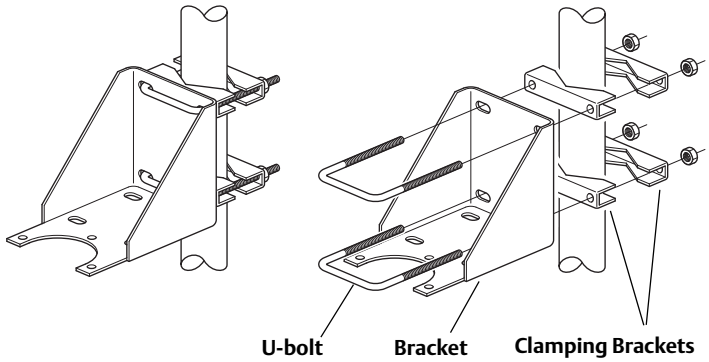

Mount the bracket to the pole

Mount the bracket to the pole, making sure the distance between the probe and bracket does not exceed the length of the remote connection.

1. Put the two U-bolts through the holes of the bracket. Several holes are available for vertical/horizontal pipe mounting.
2. Put the clamping brackets on the U-bolts and around the pipe.
3. Use the supplied nuts to fasten the bracket to the pipe.

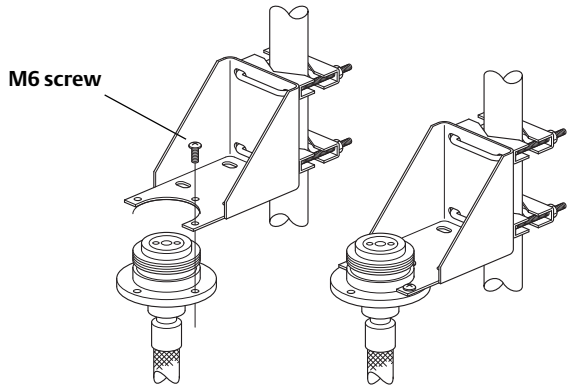

Fasten the housing support to the bracket

Fasten the housing support to the bracket using the M6 screws. The screws are threaded through the top of the mounting bracket and into the housing support.

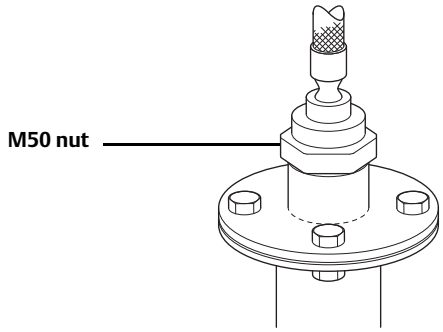

Mount the probe housing on the probe

Mount the probe housing on the probe, making sure that the M50 nut is properly tightened.

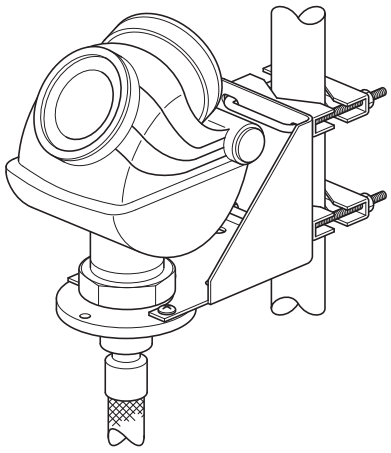

Connect the transmitter head on the housing support

Connect the transmitter head on the housing support, making sure that the M50 nut is properly tightened.

See "Remote housing configuration" on page 310 to check if the transmitter is configured with remote housing.

D.2 Remote connection, field retrofit

To upgrade a currently installed Rosemount 5300 transmitter with a remote housing, the embedded software needs revision 2.A2 or later, and the Spare Part Kit (03300-7006-000X) must be ordered.The position X corresponds to the remote housing cable length in meters.

The Rosemount 5300 transmitter head must be configured for remote housing to work.

The Spare Part Kit consists of:

- Remote connection
- Bracket kit
  - Bracket (1 pcs)
  - Clamping bracket (4 pcs)
  - U-bolt (2 pcs)
  - M6 screw (3 pcs)
  - M6 nut (4 pcs)

Mount the bracket to the pole

Mount the bracket to the pole, making sure the distance between the probe and bracket does not exceed the length of the remote connection.

1. Put the two U-bolts through the holes of the bracket. Several holes are available for vertical/horizontal pipe mounting.
2. Put the clamping brackets on the U-bolts and around the pipe.

Use the supplied nuts to fasten the bracket to the pipe.

Fasten the housing support to the bracket

Fasten the housing support to the bracket using the M6 screws. The screws are threaded through the top of the mounting bracket and into the housing support.

Remove the transmitter head from the probe

Remove the transmitter head from the probe by unscrewing the M50 nut.

Mount the probe housing on the probe

Mount the probe housing on the probe, making sure that the M50 nut is properly tightened.

Connect the transmitter head on the housing support

Connect the transmitter head on the housing support, making sure that the M50 nut is properly tightened.

D.3 Remote housing configuration

When using remote housing, the remote connection length should be configured. If the Remote Housing is ordered with a transmitter, it is configured in the factory.

In Rosemount Radar Master, select **Setup** > **Tank**.

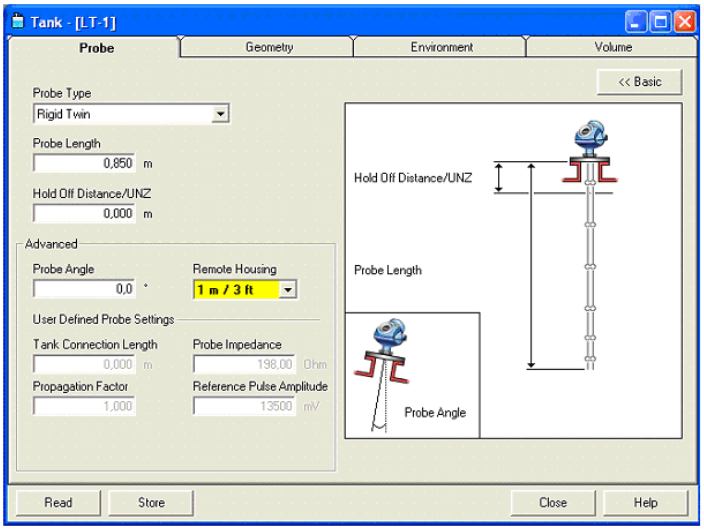

Under the *Probe* tab, Remote Housing length can be selected. Click the **Store** button to save changes.

In the Field Communicator, Remote Housing can be set with HART command [2, 3, 1, 4, 2].

NOTE:
When disconnecting a remote housing cable from a probe in low temperatures, -22 °F (-30 °C), Radar Master may not show that the probe is missing.

Appendix E Level transducer block

Overview . . . . . page 311
Parameters and Descriptions . . . . . page 313
Supported Units . . . . . page 320
Diagnostics Device Errors . . . . . page 322

E.1 Overview

This section contains information on the 5300 Level Transducer Block (TB). Descriptions of all Transducer Block parameters, errors, and diagnostics are listed.

Figure E-1. Transducer Block Diagram

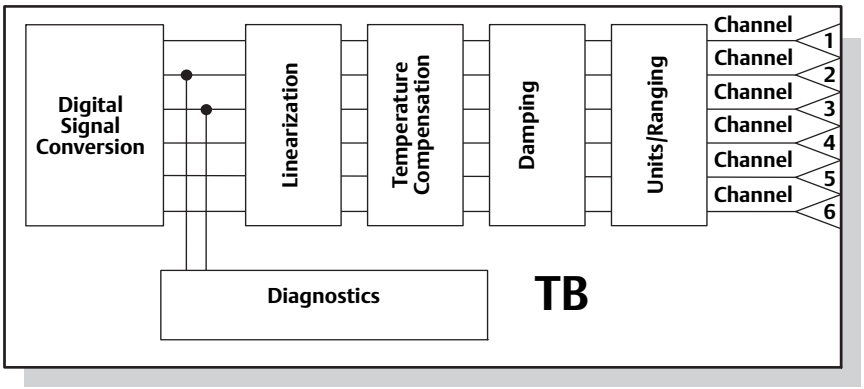

E.1.1 Definition

The transducer block contains the actual measurement data, including a level and distance reading. Channels 1–16 are assigned to these measurements (see Figure E-1). The transducer block includes information about sensor type, engineering units, and all parameters needed to configure the transmitter.

E.1.2 Channel Definitions

Each input has an assigned channel which can be linked to the AI block. The channels for the Rosemount 5300 Series are the following:

Table E-1. Channel Assignments

Channel Name	Channel Number	Process variable
Level	1	CHANNEL_RADAR_LEVEL
Ullage	2	CHANNEL_RADAR_ULLAGE
Level Rate	3	CHANNEL_RADAR_LEVELRATE
Signal Strength	4	CHANNEL_RADAR_SIGNAL_STRENGTH
Volume	5	CHANNEL_RADAR_VOLUME
Internal Temperature	6	CHANNEL_RADAR_INTERNAL_TEMPERATURE
Upper Product Volume	7	CHANNEL_UPPER_PRODUCT_VOLUME
Lower Product Volume	8	CHANNEL_LOWER_ PRODUCT_VOLUME
Interface Distance	9	CHANNEL_INTERFACE_ DISTANCE
Upper Product Thickness	10	CHANNEL_UPPER_ PRODUCT_THICKNESS
Interface Level	11	CHANNEL_INTERFACE_LEVEL
Interface Level Rate	12	CHANNEL_INTERFACE_ LEVELRATE
Interface Signal Strength	13	CHANNEL_INTERFACE_ SIGNALSTRENGTH
Signal Quality	14	CHANNEL_SIGNAL_QUALITY
Surface/Noise Margin	15	CHANNEL_ SURFACE_NOISE_MARGIN
Vapor DC	16	CHANNEL_VAPOR_DC

E.2 Parameters and Descriptions

Table E-2. Level Transducer Block Parameters and Descriptions

Parameter	Index Number	Description
ST_REV	1	The revision level of the static data associated with the function block. The revision value increments each time a static parameter value in the block is changed.
TAG_DESC	2	The user description of the intended application of the block.
STRATEGY	3	The strategy field can be used to identify grouping of blocks. This data is not checked or processed by the block.
ALERT_KEY	4	The identification number of the plant unit. This information may be used in the host for sorting alarms, etc.
MODE_BLK	5	The actual, target, permitted, and normal modes of the block. Target: The mode to “go to” Actual: The mode the “block is currently in” Permitted: Allowed modes that target may take on Normal: Most common mode for target
BLOCK_ERR	6	This parameter reflects the error status associated with the hardware or software components associated with a block. It is a bit string, so that multiple errors may be shown.
UPDATE_EVT	7	This alert is generated by any change to the static data.
BLOCK_ALM	8	The block alarm is used for all configuration, hardware, connection failure or system problems in the block. The cause of the alert is entered in the subcode field. The first alert to become active will set the Active status in the Status parameter. As soon as the Unreported status is cleared by the alert reporting task, another block alert may be reported without clearing the Active status, if the subcode has changed.
TRANSDUCER_DIRECTORY	9	Directory that specifies the number and starting indices of the transducers in the transducer block.
TRANSDUCER_TYPE	10	Identifies the transducer.
XD_ERROR	11	A transducer block alarm subcode.
COLLECTION_DIRECTORY	12	A directory that specifies the number, starting indices, and DD Item ID’s of the data collections in each transducer within a transducer block.
RADAR_LEVEL_TYPE	13	Not used
RADAR_LEVEL	14	Level
RADAR_LEVEL_RANGE	15	See Table I-4
RADAR_ULLAGE	16	Distance (Ullage)
RADAR_LEVELRATE	17	Level Rate
RADAR_LEVELRATE_RANGE	18	See Table I-5
RADAR_LEVEL_SIGNAL_STRENGTH	19	Signal strength
RADAR_LEVEL_SIGNAL_STRENGTH_RANGE	20	See Table I-7

Parameter	Index Number	Description
RADAR_VOLUME	21	Volume
RADAR_VOLUME_RANGE	22	See Table I-8
RADAR_INTERNAL_TEMPERATURE	23	Internal Temperature
RADAR_INTERNAL_TEMPERATURE_RANGE	24	Range, unit and number of decimals
VOLUME_UPPER	25	The calculated volume value of the upper product at the current level and interface
VOLUME_LOWER	26	The calculated volume value of the lower product at the current interface
INTERFACE_DISTANCE	27	The distance to the interface (from the upper reference point).
UPPER_PRODUCT_THICKNESS	28	The thickness of the upper product (from the surface value to the interface value).
INTERFACE_LEVEL	29	The current interface level value (from the zero level reference point and up to the interface).
INTERFACE_LEVELRATE	30	The current velocity at which the interface is moving. A positive value indicates the interface is moving up.
INTERFACE_SIGNAL_STRENGTH	31	The current signal strength of the interface echo.
PROBE_TYPE	32	Select the type of probe that is mounted to this device. Use User Defined probe if your probe can not be found in the list or if you have done modifications to a standard probe.
PROBE_LENGTH	33	Enter the length of the probe measured from the device's upper reference point (normally the upper side of the tank flange) down to the probe end. If a weight is used it shall not be included in the length.
PROBE_ANGLE	34	Defines the angle compared to the plumb line at which the device with probe is mounted (0°means that probe is mounted vertically).
PROBE_END_PULSE_POLARITY	35	This parameter is used for User Defined probes only. Please contact Emerson Process Management Service Department for more information
PROBE_IMPEDANCE	36	This parameter is used for User Defined probes only. Please contact Emerson Process Management Service Department for more information
TCL	37	This parameter is used for User Defined probes only. Please contact Emerson Process Management Service Department for more information
PROPAGATION_FACTOR	38	This parameter is used for User Defined probes only. Please contact Emerson Process Management Service Department for more information
REF_PULSE_AMPL	39	This parameter is used for User Defined probes only. Please contact Emerson Process Management Service Department for more information
GEOM_TANK_HEIGHT	40	Tank Height (R)
GEOM_HOLD_OFF_DIST	41	Hold off distance

Parameter	Index Number	Description
VAPOR_DC	42	Enter the dielectric constant for the vapor gas in the tank. For air at 20 degC and atmospherical pressure the vapor DC is close to 1, but for high pressure/high temperature applications the DC may increase and affect the accuracy of the measurement
UPPER_PRODUCT_DC	43	Enter the Upper Product Dielectric Constant (DC) as dielectric accurate as possible. This value affects the accuracy of the interface level measurement
LOWER_PRODUCT_DC_RANGE	44	Enter the range of the dielectric constant (DC) for the lower product in the tank. If you are uncertain about the value for this parameter or are changing product in the tank on a regular basis choose Unknown
PRODUCT_DIELEC_RANGE	45	Enter the range of the Product DC for the product in the tank. If you are uncertain about the value for this parameter or are changing product in the tank on a regular basis choose Unknown
MEAS_MODE	46	Select the Measurement Mode to use in the device. Some modes require software options to be enabled in the device. You can upgrade the device to enable more software options
DAMP_VALUE	47	Damping value
GEOM_OFFSET_DIST	48	Distance Offset
GEOM_CALIBRATION_DIST	49	Calibration Distance
LCD_SETTINGS	50	
LCD_PARAMETERS	51	Parameters to show
LCD_LANGUAGE	52	Language on display
LCD_LENGTH_UNIT	53	Length unit on display
LCD_VOLUME_UNIT	54	Volume unit on display
LCD_TEMPERATURE_UNIT	55	Temperature unit on display
LCD_VELOCITY_UNIT	56	Velocity unit on display
MAX_INTERNAL_TEMPERATURE	57	The maximum temperature that has been measured inside the device during operation
MIN_INTERNAL_TEMPERATURE	58	The minimum temperature that has been measured inside the device during operation
OPERATION TIME	59	The total number of hours the device has been in operation
ENV_ENVIRONMENT	60	Process Condition
ENV_PRESENTATION	61	Tank Presentation
ENV_DEVICE_MODE	62	Service mode
ENV_WRITE_PROTECT	63	Write protect
DIAGN_DEVICE_ALERT	64	Errors, Warnings, Status, Plant web alerts
DIAGN_VERSION	65	Gauge SW version
DIAGN_REVISION	66	P1451 revision
DIAGN_DEVICE_ID	67	Device ID for the gauge.
DIAGN_DEVICE_MODEL	68	Type of 5300. LF or HF

Parameter	Index Number	Description
STATS_ATTEMPTS	69	The total number of messages sent to the transducer A/D board
STATS_FAILURES	70	The total number of failed A/D board message attempts
STATS_TIMEOUTS	71	The total number of timed out A/D board message attempts
MAX_UPPER_PRODUCT_THICKNESS	72	This is the maximum thickness of the upper product that the device is able to measure through. If the thickness of the upper product is larger than this value, the device will not be able to locate the interface echo
MEAS_STATUS	73	
INTERFACE_STATUS	74	
REMOTE_HOUSING	75	
MEAS_VAPOR_DC	76	Measured Vapor Dielectric Constant
SPEC_CONFIG_TNZ	77	Configure Trim Near Zone
SPEC_CONFIG_PEP	78	Configure Probe End Projection
SPEC_CONFIG_TANK_MATERIAL	79	Configure Tank Material
SPEC_CONFIG_VC	80	Configure Vapor Compensation
VC_WARNING	81	Vapor Compensation Warning
PEP_STATUS	82	Probe End Projection Status
TANK_MATERIAL	83	
SW_SUPPORT2	84	Defines what options are enabled in the device.
MOUNTING_TYPE	85	
PIPE_DIAMETER	86	
NOZZLE_HEIGHT	87	
DEVICE_HW_CONFIG	88	
DEVICE_STATUS	89	
VOLUME_STATUS	90	
MWM_WARNING	91	
MEAS_WARNING	92	
CONFIG_WARNING	93	
VAPOR_COMP_STATUS	94	Vapor Compensation Status

Table E-3. Probe Type

VALUE	PROBE_TYPE
0	User defined
1	Rigid Twin
2	Flexible Twin
3	Coaxial
4	Rigid Single 0.3 in. (8 mm)
5	Flexible Single
10	Coaxial HTHP
11	Coaxial HP/C
12	Rigid Single HTHP/HP 0.3 in. (8 mm)
13	Flexible Single HTHP
20	Rigid Single PTFE
21	Flexible Single PTFE
30	Rigid Single HP/C 0.3 in. (8 mm)
31	Flexible Single HP
32	Flexible Single PA
33	Rigid Single 0.5 in. (13 mm)
40	Rigid Single HTHP 0.5 in. (13 mm)
41	Rigid Single HP/C 0.5 in. (13 mm)

Table E-4. Device Mode

VALUE	ENV_DEVICE_MODE
0	Normal operation
1	Spare
2	Restart device
3	Set to factory default database
4	Trim Near Zone

Table E-5. Environment

Bit Number	Value of ENV_ENVIRONMENT	Description
2	0x00000004	Turbulent
3	0x00000008	Foam
28	0x10000000	Rapid Changes

Table E-6. Presentation

Bit Number	Value of ENV_PRESENTATION	Description
28	0x10000000	Do Not Use Full Tank State
2	0x00000002	Use 3300 Full and Empty Detect Areas
3	0x00000004	Disable PEP PE Sign Change Logic
8	0x00000100	Show Negative Level as Zero
10	0x00000400	Probe End Projection
11	0x00000800	Do Not Use Automatic PEP DC Estimation
12	0x00001000	Do Not Reject Possible Double Bounces
18	0x00040000	Use Jump Filter
22	0x00400000	Show Level below Probe End as Zero
23	0x00800000	Use Vapor Compensation
24	0x01000000	Calculate Signal Quality Metrics

Table E-7. LCD Parameters

Bit Number	Value of LCD_PARAMETERS	Description
28	0x10000000	Level
1	0x00000002	Distance
2	0x00000004	Level Rate
3	0x00000008	Signal Strength
4	0x00000010	Volume
5	0x00000020	Internal Temperature
6	0x00000040	Analog Out Current
7	0x00000080	Percent Of Range
8	0x00000100	Com Quality
9	0x00000200	Interface Level
10	0x00000400	Interface Distance
11	0x00000800	Interface Level Rate
12	0x00001000	Interface Signal Strength
13	0x00002000	Upper Product Thickness
14	0x00004000	Lower Volume
15	0x00008000	Upper Volume
16	0x00010000	Signal Quality
17	0x00020000	Surface Noise Margin
18	0x00040000	Vapor DC

Table E-8. Product Dielectrical Range

VALUE	ENV_DIELECTR_CONST
0	1.4 - 1.9 (e.g. liquified gas, plastics)
1	1.9-2.5 (e.g. Oil Based)
2	2.5-4 (e.g. Oil Based)
3	4-10 (e.g. Alcohol, Acids)
4	>10 (e.g. Waterbased)
5	Unknown

Table E-9. Measurement Mode

VALUE	MEAS_MODE
0	Liquid Product Level
1	Product Level and Interface Level
2	Solid Product Level
3	Interface Level with Submerged Probe

E.3 Supported Units

E.3.1 Unit Codes

Table E-10. Length

Value	Display	Description
1010	m	meter
1012	cm	centimeter
1013	mm	millimeter
1018	ft	feet
1019	in	inch

Table E-11. Level Rate

Value	Display	Description
1061	m/s	meter per second
1063	m/h	meter per hour
1067	ft/s	feet per second
1069	in/m	inch per minute

Table E-12. Temperature

Value	Display	Description
1001	°C	Degree Celsius
1002	°F	Degree Fahrenheit

Table E-13. Signal Strength

Value	Display	Description
1243	mV	millivolt

Table E-14. Volume

Value	Display	Description
1034	m^3	Cubic meter
1038	L	Liter
1042	in^3	Cubic inch
1043	ft^3	Cubic feet
1044	Yd^3	Cubic yard
1048	Gallon	US gallon
1049	ImpGall	Imperial gallon
1051	Bbl	Barrel

Table E-15. Time

Value	Display	Description
1054	s	Second

Table E-16. Percent

Value	Display	Description
1342	%	Percent

E.4 Diagnostics Device Errors

In addition to the BLOCK_ERR and XD_ERROR parameters, more detailed information on the measurement status can be obtained via DIAGN_DEV_ALERT. Table E-17 lists the potential errors and the possible corrective actions for the given values. The corrective actions are in order of increasing system level compromises. The first step should always be to reset the gauge and then if the error persists, try the steps in Table E-17. Start with the first corrective action and then try the second.

Table E-17. Device Errors Diagnostics

Bit Number	Value of DIAGN_DEV_ALERT	Description	Corrective action
	0	No alarm active	
0	0x00000001	Reserved	
1	0x00000002	FF card to gauge comm fault	Replace gauge
2	0x00000004	Level Measurement Failure	Verify device installation and configuration
3	0x00000008	Temperature Measurement Failure	Check ambient temperature. If ambient temperature ok replace the device.
4	0x00000010	Volume measurement failure	Check volume configuration
5	0x00000020	Database Error	Load default database to the device and reconfigure the device
6	0x00000040	HW Error	Replace device
7	0x00000080	Microwave Unit Error	Replace device
8	0x00000100	Configuration Error	Load default database to the device and reconfigure the device
9	0x00000200	SW Error	Replace device
10	0x00000400	Invalid Strap Table	Check the Strapping Table configuration
11	0x00000800	Internal Temp Warning	Check ambient temperature at installation site
12	0x00001000	Database Warning	Check the device configuration
13	0x00002000	HW Warning	Check device installation and configuration
14	0x00004000	Microwave Unit Warning	Check device installation and configuration
15	0x00008000	Configuration Warning	Check the device configuration
16	0x00010000	SW Warning	Check device installation and configuration
17	0x00020000	Simulation Mode	Use Simulation Method under advanced configuration tool to get the device out of Simulation Mode
18	0x00040000	Volume Range Warning	Verify Strapping Table
19	0x00080000	Software Write Protected	
20	0x00100000	Vapor Compensation Not Calibrated	
21	0x00200000	Vapor DC Estimation Limited	

22	0x00400000	Reference Reflector Not Found	
23	0x00800000	BaseLine too low	
24	0x01000000	BaseLine too high	
25	0x02000000	Gain control	
26	0x04000000	Unsupported Combination of Functions	
27	0x08000000		
28	0x10000000		
29	0x20000000	Probe Missing	Check probe connection
30	0x40000000	Interface Measurement Failure	Check interface measurement configuration
31	0x80000000	Hardware Write Protected	

Appendix F Register transducer block

F.1 Overview

The Register Transducer Block allows access to Database registers and Input registers of the Rosemount 5300 transmitter. This makes it possible to read a selected set of register directly by accessing the memory location.

The Register Transducer Block is only available with advanced service.

⚠ CAUTION

Since this Register Transducer Block allows access to most registers in the transmitter, which includes the registers set by the Methods and Configuration screens, in the Level Transducer Block (see Appendix E: Level transducer block) it should be handled with care and ONLY to be changed by trained and certified service personnel, or as guided by Emerson Process Management, Rosemount Division support personnel.

F.1.1 Register Access Transducer Block Parameters

Table F-1. Register Access Transducer Block Parameters

Parameter	Index Number	Description
ST_REV	1	The revision level of the static data associated with the function block. The revision value increments each time a static parameter value in the block is changed.
TAG_DESC	2	The user description of the intended application of the block.
STRATEGY	3	The strategy field can be used to identify grouping of blocks. This data is not checked or processed by the block.
ALERT_KEY	4	The identification number of the plant unit. This information may be used in the host for sorting alarms, etc.
MODE_BLK	5	The actual, target, permitted, and normal modes of the block. Target: The mode to “go to” Actual: The mode the “block is currently in” Permitted: Allowed modes that target may take on Normal: Most common mode for target
BLOCK_ERR	6	This parameter reflects the error status associated with the hardware or software components associated with a block. It is a bit string, so that multiple errors may be shown.
UPDATE_EVT	7	This alert is generated by any change to the static data.
BLOCK_ALM	8	The block alarm is used for all configuration, hardware, connection failure or system problems in the block. The cause of the alert is entered in the subcode field. The first alert to become active will set the Active status in the Status parameter. As soon as the Unreported status is cleared by the alert reporting task, another block alert may be reported without clearing the Active status, if the subcode has changed.

Parameter	Index Number	Description
TRANSDUCER_DIRECTORY	9	Directory that specifies the number and starting indices of the transducers in the transducer block.
TRANSDUCER_TYPE	10	Identifies the transducer.
XD_ERROR	11	A transducer block alarm subcode.
COLLECTION_DIRECTORY	12	
INP_SEARCH_START_NBR	13	Search start number for input registers
DB_SEARCH_START_NBR	14	Search start number for holding registers
INP_REG_1_TYPE	15	Register type
INP_REG_1_FLOAT	16	If the register contains a float value, it should be displayed here
INP_REG_1_INT_DEC	17	If the register contains a DWORD value, and *dec* is chosen, it should be displayed here
INP_REG_2_TYPE	18	Register type
INP_REG_2_FLOAT	19	If the register contains a float value, it should be displayed here
INP_REG_2_INT_DEC	20	If the register contains a DWORD value, and *dec* is chosen, it should be displayed here
INP_REG_3_TYPE	21	Register type
INP_REG_3_FLOAT	22	If the register contains a float value, it should be displayed here
INP_REG_3_INT_DEC	23	If the register contains a DWORD value, and *dec* is chosen, it should be displayed here
INP_REG_4_TYPE	24	Register type
INP_REG_4_FLOAT	25	If the register contains a float value, it should be displayed here
INP_REG_4_INT_DEC	26	If the register contains a DWORD value, and *dec* is chosen, it should be displayed here
INP_REG_5_TYPE	27	Register type
INP_REG_5_FLOAT	28	If the register contains a float value, it should be displayed here
INP_REG_5_INT_DEC	29	If the register contains a DWORD value, and *dec* is chosen, it should be displayed here
INP_REG_6_TYPE	30	Register type
INP_REG_6_FLOAT	31	If the register contains a float value, it should be displayed here
INP_REG_6_INT_DEC	32	If the register contains a DWORD value, and *dec* is chosen, it should be displayed here
INP_REG_7_TYPE	33	Register type
INP_REG_7_FLOAT	34	If the register contains a float value, it should be displayed here
INP_REG_7_INT_DEC	35	If the register contains a DWORD value, and *dec* is chosen, it should be displayed here
INP_REG_8_TYPE	36	Register type
INP_REG_8_FLOAT	37	If the register contains a float value, it should be displayed here
INP_REG_8_INT_DEC	38	If the register contains a DWORD value, and *dec* is chosen, it should be displayed here
INP_REG_9_TYPE	39	Register type
INP_REG_9_FLOAT	40	If the register contains a float value, it should be displayed here

Parameter	Index Number	Description
INP_REG_9_INT_DEC	41	If the register contains a DWORD value, and *dec* is chosen, it should be displayed here
INP_REG_10_TYPE	42	Register type
INP_REG_10_FLOAT	43	If the register contains a float value, it should be displayed here
INP_REG_10_INT_DEC	44	If the register contains a DWORD value, and *dec* is chosen, it should be displayed here
DB_REG_1_TYPE	45	Register type
DB_REG_1_FLOAT	46	If the register contains a float value, it should be displayed here
DB_REG_1_INT_DEC	47	If the register contains a DWORD value, and *dec* is chosen, it should be displayed here
DB_REG_2_TYPE	48	Register type
DB_REG_2_FLOAT	49	If the register contains a float value, it should be displayed here
DB_REG_2_INT_DEC	50	If the register contains a DWORD value, and *dec* is chosen, it should be displayed here
DB_REG_3_TYPE	51	Register type
DB_REG_3_FLOAT	52	If the register contains a float value, it should be displayed here
DB_REG_3_INT_DEC	53	If the register contains a DWORD value, and *dec* is chosen, it should be displayed here
DB_REG_4_TYPE	54	Register type
DB_REG_4_FLOAT	55	If the register contains a float value, it should be displayed here
DB_REG_4_INT_DEC	56	If the register contains a DWORD value, and *dec* is chosen, it should be displayed here
DB_REG_5_TYPE	57	Register type
DB_REG_5_FLOAT	58	If the register contains a float value, it should be displayed here
DB_REG_5_INT_DEC	59	If the register contains a DWORD value, and *dec* is chosen, it should be displayed here
DB_REG_6_TYPE	60	Register type
DB_REG_6_FLOAT	61	If the register contains a float value, it should be displayed here
DB_REG_6_INT_DEC	62	If the register contains a DWORD value, and *dec* is chosen, it should be displayed here
DB_REG_7_TYPE	63	Register type
DB_REG_7_FLOAT	64	If the register contains a float value, it should be displayed here
DB_REG_7_INT_DEC	65	If the register contains a DWORD value, and *dec* is chosen, it should be displayed here
DB_REG_8_TYPE	66	Register type
DB_REG_8_FLOAT	67	If the register contains a float value, it should be displayed here
DB_REG_8_INT_DEC	68	If the register contains a DWORD value, and *dec* is chosen, it should be displayed here
DB_REG_9_TYPE	69	Register type
DB_REG_9_FLOAT	70	If the register contains a float value, it should be displayed here
DB_REG_9_INT_DEC	71	If the register contains a DWORD value, and *dec* is chosen, it should be displayed here

Parameter	Index Number	Description
DB_REG_10_TYPE	72	Register type
DB_REG_10_FLOAT	73	If the register contains a float value, it should be displayed here
DB_REG_10_INT_DEC	74	If the register contains a DWORD value, and *dec* is chosen, it should be displayed here
RM_COMMAND	75	Used to set what will be read or write from a secondary master.
RM_DATA	76	Data read/write from secondary master.
RM_STATUS	77	Status read by a secondary master.

Appendix G Advanced configuration transducer block

G.1 Overview

The Advanced Configuration Transducer Block contains functions for the advanced configuration of the Rosemount 5300 transmitter. It includes functions, such as amplitude threshold settings for filtering of disturbing echoes and noise, simulation of measurement values, Empty Tank Handling for optimizing measurements close to the tank bottom, and strapping table for volume measurements.

G.1.1 Advanced Configuration Transducer Block Parameters

Table G-1. Advanced Configuration Transducer Block Parameters

Parameter	Index Number	Description
ST_REV	1	The revision level of the static data associated with the function block. The revision value increments each time a static parameter value in the block is changed.
TAG_DESC	2	The user description of the intended application of the block.
STRATEGY	3	The strategy field can be used to identify grouping of blocks. This data is not checked or processed by the block.
ALERT_KEY	4	The identification number of the plant unit. This information may be used in the host for sorting alarms, etc.
MODE_BLK	5	The actual, target, permitted, and normal modes of the block. Target: The mode to “go to” Actual: The mode the “block is currently in” Permitted: Allowed modes that target may take on Normal: Most common mode for target
BLOCK_ERR	6	This parameter reflects the error status associated with the hardware or software components associated with a block. It is a bit string, so that multiple errors may be shown.
UPDATE_EVT	7	This alert is generated by any change to the static data.
BLOCK_ALM	8	The block alarm is used for all configuration, hardware, connection failure or system problems in the block. The cause of the alert is entered in the subcode field. The first alert to become active will set the Active status in the Status parameter. As soon as the Unreported status is cleared by the alert reporting task, another block alert may be reported without clearing the Active status, if the subcode has changed.
TRANSDUCER_DIRECTORY	9	Directory that specifies the number and starting indices of the transducers in the transducer block.
TRANSDUCER_TYPE	10	Identifies the transducer. 100 = Standard pressure with calibration
XD_ERROR	11	A transducer block alarm subcode.

Parameter	Index Number	Description
COLLECTION_DIRECTORY	12	
AMPLITUDE_THRESHOLD_CURVE	13	ATC: filters out weak disturbance echoes and noise.
SIMULATION_MODE	14	Simulation of measurement values.
SET_CONSTANT_THRESHOLD	15	A constant amplitude threshold can be used to filter out noise.
RADAR_LEVEL_RANGE	16	
RADAR_LEVEL_SIG-NAL_STRENGTH_RANGE	17	
RADAR_VOLUME_RANGE	18	
ENV_PRESENTATION	19	
PROBE_END_THRESH	20	This threshold is used to locate the probe end echo. The probe end echo is used by the device to know when the tank is empty, but is sometimes also useful when no surface echo can be found.
REFERENCE_THRESH	21	This threshold is used to locate the reference echo.
INTERFACE_THRESH	22	This threshold is used to block out disturbing echoes and noise when locating the interface echo.
FULL_TANK_THRESH_OFFSET	23	By adding an offset to the Reference Threshold it is possible for the device to determine when the tank is full. If the reference echo amplitude is between the Reference Threshold and the Full Tank Threshold then the tank is considered full.
PEP_PRODUCT_DC	24	Enter the product dielectric constant for the product in the tank.
AUTO_CONF_MEAS_FUNC	25	
ECHO_TIME_OUT	26	Change this parameter to define the time in seconds before the device should start to search for a surface echo after it has been lost.
CLOSE_DIST	27	This parameter defines a window centered at the current surface position where new surface echo candidates can be selected. The size of the window is +/-Close Distance. Echoes outside this window will not be considered as surface echoes.
USED_PROBE_END_THRESH	28	Probe End Threshold currently used in the device.
USED_REFERENCE_THRESH	29	Reference Threshold currently used in the device.
USED_INTERFACE_THRESH	30	Interface Threshold currently used in the device.
USED_TANK_PRESENTATION	31	
USED_ECHO_TIME_OUT	32	Echo Timeout currently used in the device.
USED_CLOSE_DIST	33	Close Distance currently used in the device.
SW_SUPPORT2	34	Defines what options are enabled in the device.
USED_HOLD_OFF_DIST	35	The Hold Off Distance/Upper Null Zone currently used in the device.
USED_PEP_PRODUCT_DC	36	Product Dielectric currently used in the device.
START_CODE	37	This code determines what options are available in your device. Do not change your Start Code unless you have received a valid one. Use Enter Start Codes method to change it.
UNIT_CODE	38	Unit code 1 -4 can be sent to your local Emerson representative in order to receive new Start Codes for upgrading your device.
ENV_SET_START_CODE	39	Set Start Code

Parameter	Index Number	Description
PROBE_END_ANCHORING	40	
PEP_PROBE_END_OFFSET	41	
USED_PEP_ PROBE_END_OFFSET	42	
VOL_VOLUME_CALC_METHOD	43	Choose what kind of volume calculation method to use.
VOL_IDEAL_DIAMETER	44	Diameter of the tank (only for ideal tank shapes).
VOL_IDEAL_LENGTH	45	Length/height of the tank (only for ideal tank shapes).
VOL_VOLUME_OFFSET	46	Use this parameter to add a volume to each calculated volume value. The volume can for instance correspond to a sump volume that you wish to add to your calculation.
VOL_STRAP_TABLE_LENGTH	47	Number of points to use in the strapping table.
VOL_STRAP_LEVEL	48	Strap value level 1-20 points
VOL_STRAP_VOLUME	49	Strap value volume 1-20 points
ECHO_REG	50	Read Echo distance, amplitude and class from gauge. The Echo Distance is the distance from the reference echo to the target echo calculated by the radar from the plot and gauge configuration.
ECHO_WRITE	51	Echo Found/False Record
PEP_STATUS	52	Probe End Projection Status
PEP_PRODUCT_DC_LIMIT	53	Probe End Projection Dielectric Constant Limit
PROBE_END_PULSE_POLARITY	54	
USED_MAX_VAPOR_DC	55	
REF_REFLECTOR_TYPE	56	Reference Reflector Type
VAPOR_DC_FILTER_FACTOR	57	Vapor Dielectric Constant Filter Factor
SIGNAL_QUALITY	58	
MIN_SIGNAL_QUALITY	59	
MAX_SIGNAL_QUALITY	60	
TIME_SINCE_LAST_RESET	61	
SURFACE_NOISE_MARGIN	62	Surface/Noise Margin
MIN_SURFACE_NOISE_MARGIN	63	Minimum Surface/Noise Margin
MAX_SURFACE_NOISE_MARGIN	64	Maximum Surface/Noise Margin
VAPOR_COMP_STATUS	65	Vapor Compensation Status
DEVICE_COMMAND	66	
DEVICE_COMMAND_STATUS	67	
RADAR_INTERNAL_TEMPERA-TURE_RANGE	68	
MAX_PRESSURE	69	
MAX_TEMPERATURE	70	
MAX_VAPOR_DC	71	Maximum Vapor Dielectric Constant
MEAS_STATUS	72	Measurement Status
CENTERING_DISC	73	
PEP_TRIM_EMPTY_FAILURE	74	Probe End Projection - Trim Empty Failure

Parameter	Index Number	Description
PEP_TRIM_FILL_FAILURE	75	Probe End Projection - Fill Failure
PEP_RAW_PRODUCT_DC_EST	76	Probe End Projection - Raw Product Dielectric Constant Estimation
PEP_RAW_DC_EST_USED_DISTANCE	77	
USE_PROBE_END_PROJECTION	78	
USE_STATIC_PRODUCT_DC	79	Use Static Product Dielectric Constant
CALCULATE_SIGNAL_QUALITY_METRICS	80	
USE_VAPOR_COMPENSATION	81	
SPEC_CONFIG_PEP	82	Configure Probe End Projection
SPEC_CONFIG_VC	83	Configure Vapor Compensation

Appendix H Resource transducer block

Overview . . . . . page 333
Parameters and Descriptions . . . . . page 333

H.1 Overview

This section contains information on the Rosemount 5300 Series Radar Level Transmitter Resource Block. Descriptions of all Resource Block Parameters, errors, and diagnostics are included. Also the modes, alarm detection, status handling, and troubleshooting are discussed.

Definition

The resource block defines the physical resources of the device. The resource block also handles functionality that is common across multiple blocks. The block has no linkable inputs or outputs.

H.2 Parameters and Descriptions

The table below lists all the configurable parameters of the Resource Block, including the descriptions and index numbers for each.

Parameter	Index Number	Description
ACK_OPTION	38	Selection of whether alarms associated with the function block will be automatically acknowledged.
ADVISE_ACTIVE	82	Enumerated list of advisory conditions within a device.
ADVISE_ALM	83	Alarm indicating advisory alarms. These conditions do not have a direct impact on the process or device integrity.
ADVISE_ENABLE	80	Enabled ADVISE_ALM alarm conditions. Corresponds bit for bit to the ADVISE_ACTIVE. A bit on means that the corresponding alarm condition is enabled and will be detected. A bit off means the corresponding alarm condition is disabled and will not be detected.
ADVISE_MASK	81	Mask of ADVISE_ALM. Corresponds bit of bit to ADVISE_ACTIVE. A bit on means that the condition is masked out from alarming.
ADVISE_PRI	79	Designates the alarming priority of the ADVISE_ALM
ALARM_SUM	37	The current alert status, unacknowledged states, unreported states, and disabled states of the alarms associated with the function block.
ALERT_KEY	04	The identification number of the plant unit.

Parameter	Index Number	Description
BLOCK_ALM	36	The block alarm is used for all configuration, hardware, connection failure or system problems in the block. The cause of the alert is entered in the subcode field. The first alert to become active will set the Active status in the Status parameter. As soon as the Unreported status is cleared by the alert reporting task, another block alert may be reported without clearing the Active status, if the subcode has changed.
BLOCK_ERR	06	This parameter reflects the error status associated with the hardware or software components associated with a block. It is a bit string, so that multiple errors may be shown.
CLR_FSTATE	30	Writing a Clear to this parameter will clear the device FAIL_SAFE if the field condition has cleared.
CONFIRM_TIME	33	The time the resource will wait for confirmation of receipt of a report before trying again. Retry will not happen when CONFIRM_TIME=0.
CYCLE_SEL	20	Used to select the block execution method for this resource. The Rosemount 5300 supports the following: Scheduled: Blocks are only executed based on the function block schedule. Block Execution: A block may be executed by linking to another blocks completion.
CYCLE_TYPE	19	Identifies the block execution methods available for this resource.
DD_RESOURCE	09	String identifying the tag of the resource which contains the Device Description for this resource.
DD_REV	13	Revision of the DD associated with the resource - used by an interface device to locate the DD file for the resource.
DEFINE_WRITE_LOCK	60	Allows the operator to select how WRITE_LOCK behaves. The initial value is “lock everything”. If the value is set to “lock only physical device” then the resource and transducer blocks of the device will be locked but changes to function blocks will be allowed.
DETAILED_STATUS	55	Indicates the state of the transmitter. See Resource Block detailed status codes.
DEV_REV	12	Manufacturer revision number associated with the resource - used by an interface device to locate the DD file for the resource.
DEV_STRING	43	This is used to load new licensing into the device. The value can be written but will always read back with a value of 0.
DEV_TYPE	11	Manufacturer’s model number associated with the resource - used by interface devices to locate the DD file for the resource.
DIAG_OPTION	46	Indicates which diagnostics licensing options are enabled.
DISTRIBUTOR	42	Reserved for use as distributor ID. No Foundation enumerations defined at this time.
DOWNLOAD_MODE	67	Gives access to the boot block code for over-the-wire downloads. 0 = Uninitialized 1 = Run mode 2 = Download mode
FAULT_STATE	28	Condition set by loss of communication to an output block, fault promoted to an output block or physical contact. When FAIL_SAFE condition is set, then output function blocks will perform their FAIL_SAFE actions.
FAILED_ACTIVE	72	Enumerated list of failure conditions within a device.

Parameter	Index Number	Description
FAILED_ALM	73	Alarm indicating a failure within a device which makes the device non-operational.
FAILED_ENABLE	70	Enabled FAILED_ALM alarm conditions. Corresponds bit for bit to the FAILED_ACTIVE. A bit on means that the corresponding alarm condition is enabled and will be detected. A bit off means the corresponding alarm condition is disabled and will not be detected.
FAILED_MASK	71	Mask of FAILED_ALM. Corresponds bit of bit to FAILED_ACTIVE. A bit on means that the condition is masked out from alarming.
FAILED_PRI	69	Designates the alarming priority of the FAILED_ALM.
FB_OPTION	45	Indicates which function block licensing options are enabled.
FEATURES	17	Used to show supported resource block options. The supported features are: SOFT_WRITE_LOCK_SUPPORT, HARD_WRITE_LOCK_SUPPORT, REPORTS, and UNICODE
FEATURES_SEL	18	Used to select resource block options.
FINAL_ASSY_NUM	54	The same final assembly number placed on the neck label.
FREE_SPACE	24	Percent of memory available for further configuration. Zero in a preconfigured device.
FREE_TIME	25	Percent of the block processing time that is free to process additional blocks.
GRANT_DENY	14	Options for controlling access of host computers and local control panels to operating, tuning, and alarm parameters of the block. Not used by device.
HARD_TYPES	15	The types of hardware available as channel numbers.
HARDWARE_REV	52	Hardware revision of the hardware that has the resource block in it.
HEALTH_INDEX	84	Parameter representing the overall health of the device, 100 being perfect and 1 being non-functioning. The value is based on the active PWA alarms.
ITK_VER	41	Major revision number of the inter operability test case used in certifying this device as interoperable. The format and range are controlled by the Fieldbus Foundation.
LIM_NOTIFY	32	Maximum number of unconfirmed alert notify messages allowed.
MAINT_ACTIVE	77	Enumerated list of maintenance conditions within a device.
MAINT_ALM	78	Alarm indicating the device needs maintenance soon. If the condition is ignored, the device will eventually fail.
MAINT_ENABLE	75	Enabled MAINT_ALM alarm conditions. Corresponds bit for bit to the MAINT_ACTIVE. A bit on means that the corresponding alarm condition is enabled and will be detected. A bit off means the corresponding alarm condition is disabled and will not be detected.
MAINT_MASK	76	Mask of MAINT_ALM. Corresponds bit of bit to MAINT_ACTIVE. A bit on means that the condition is masked out from alarming.
MAINT_PRI	74	Designates the alarming priority of the MAINT_ALM
MANUFAC_ID	10	Manufacturer identification number – used by an interface device to locate the DD file for the resource.
MAX_NOTIFY	31	Maximum number of unconfirmed notify messages possible.
MEMORY_SIZE	22	Available configuration memory in the empty resource. To be checked before attempting a download.
MESSAGE_DATE	57	Date associated with the MESSAGE_TEXT parameter.

Parameter	Index Number	Description
MESSAGE_TEXT	58	Used to indicate changes made by the user to the device's installation, configuration, or calibration.
MIN_CYCLE_T	21	Time duration of the shortest cycle interval of which the resource is capable.
MISC_OPTION	47	Indicates which miscellaneous licensing options are enabled.
MODE_BLK	05	The actual, target, permitted, and normal modes of the block: Target: The mode to “go to” Actual: The mode the “block is currently in” Permitted: Allowed modes that target may take on Normal: Most common mode for actual
NV_CYCLE_T	23	Minimum time interval specified by the manufacturer for writing copies of NV parameters to non-volatile memory. Zero means it will never be automatically copied. At the end of NV_CYCLE_T, only those parameters which have changed need to be updated in NVRAM.
OUTPUT_BOARD_SN	53	Output board serial number.
PWA_SIMULATE	85	Parameter allowing simulation of PWA alarms.
RB_SFTWR_REV_ALL	51	The string will contains the following fields: Major rev: 1-3 characters, decimal number 0-255 Minor rev: 1-3 characters, decimal number 0-255 Build rev: 1-5 characters, decimal number 0-255 Time of build: 8 characters, xx:xx:xx, military time Day of week of build: 3 characters, Sun, Mon,... Month of build: 3 characters, Jan, Feb. Day of month of build: 1-2 characters, decimal number 1-31 Year of build: 4 characters, decimal Builder: 7 characters, login name of builder
RB_SFTWR_REV_BUILD	50	Build of software that the resource block was created with.
RB_SFTWR_REV_MAJOR	48	Major revision of software that the resource block was created with.
RB_SFTWR_REV_MINOR	49	Minor revision of software that the resource block was created with.
RECOMMENDED_ACTION	68	Enumerated list of recommended actions displayed with a device alert.
RESTART	16	Allows a manual restart to be initiated. Several degrees of restart are possible. They are the following: 1 Run – nominal state when not restarting 2 Restart resource – not used 3 Restart with defaults – set parameters to default values. See START_WITH_DEFAULTS below for which parameters are set. 4 Restart processor – does a warm start of CPU.
RS_STATE	07	State of the function block application state machine.
SAVE_CONFIG_BLOCKS	62	Number of EEPROM blocks that have been modified since last burn. This value will count down to zero when the configuration is saved.
SAVE_CONFIG_NOW	61	Allows the user to optionally save all non-volatile information immediately.
SECURITY_IO	65	Status of security switch.
SELF_TEST	59	Instructs resource block to perform self-test. Tests are device specific.
SET_FSTATE	29	Allows the FAIL_SAFE condition to be manually initiated by selecting Set.
SHED_RCAS	26	Time duration at which to give up on computer writes to function block RCas locations. Shed from RCas shall never happen when SHED_ROUT = 0

Parameter	Index Number	Description
SHED_ROUT	27	Time duration at which to give up on computer writes to function block ROut locations. Shed from ROut shall never happen when SHED_ROUT = 0
SIMULATE_IO	64	Status of simulate switch.
SIMULATE_STATE	66	The state of the simulate switch: 0 = Uninitialized 1 = Switch off, simulation not allowed 2 = Switch on, simulation not allowed (need to cycle jumper/switch) 3 = Switch on, simulation allowed
ST_REV	01	The revision level of the static data associated with the function block.
START_WITH_DEFAULTS	63	0 = Uninitialized 1 = do not power-up with NV defaults 2 = power-up with default node address 3 = power-up with default pd_tag and node address 4 = power-up with default data for the entire communications stack (no application data)
STRATEGY	03	The strategy field can be used to identify grouping of blocks.
SUMMARY_STATUS	56	An enumerated value of repair analysis.
TAG_DESC	02	The user description of the intended application of the block.
TEST_RW	08	Read/write test parameter - used only for conformance testing.
UPDATE_EVT	35	This alert is generated by any change to the static data.
WRITE_ALM	40	This alert is generated if the write lock parameter is cleared.
WRITE_LOCK	34	When hardware write protection is selected, WRITE_LOCK becomes an indicator of the jumper setting and is unavailable for software write protection. When software write lock is selected, and WRITE_LOCK is set, no writings from anywhere else are allowed, except to clear WRITE_LOCK. Block input will continue to be updated.
WRITE_PRI	39	Priority of the alarm generated by clearing the write lock.
XD_OPTION	44	Indicates which transducer block licensing options are enabled.

H.2.1 Alerts

The Resource Block will act as a coordinator for alerts. There will be three alarm parameters (FAILED_ALARM, MAINT_ALARM, and ADVISE_ALARM) which will contain information regarding some of the device errors which are detected by the transmitter software. There will be a RECOMMENDED_ACTION parameter which will be used to display the recommended action text for the highest priority alarm, and a HEALTH_INDEX parameter (0 - 100) indicating the overall health of the transmitter. FAILED_ALARM will have the highest priority followed by MAINT_ALARM, and ADVISE_ALARM will be the lowest priority.

FAILED_ALARMS

A failure alarm indicates a failure within a device that will make the device or some part of the device non-operational. This implies that the device is in need of repair and must be fixed immediately. There are five parameters associated with FAILED_ALARMS specifically, they are described below.

FAILED_ENABLED

This parameter contains a list of failures in the device which makes the device non-operational that will cause an alert to be sent. Below is a list of the failures:

1. Level / Interface Measurement Failure
2. Volume / Temperature Measurement Failure
3. Electronics Failure / Transducer Block
4. Probe Missing
5. Input / Output Failure
6. Non-Volatile Memory Failure
7. Electronics Failure / Output Board

Software Incompatibility ErrorFAILED_MASK

This parameter will mask any of the failed conditions listed in FAILED_ENABLED. A bit on means that the condition is masked out from alarming and will not be reported.

FAILED_PRI

Designates the alerting priority of the FAILED_ALM, see "Alarm Priority" on page 341. The default is 0 and the recommended values are between 8 and 15.

FAILED_ACTIVE

This parameter displays which of the alarms is active. Only the alarm with the highest priority will be displayed. This priority is not the same as the FAILED_PRI parameter described above. This priority is hard coded within the device and is not user configurable.

FAILED_ALM

Alarm indicating a failure within a device which makes the device non-operational.

MAINT_ALARMS

A maintenance alarm indicates that the device or some part of the device needs maintenance soon. If the condition is ignored, the device will eventually fail. There are five parameters associated with MAINT_ALARMS, they are described below.

MAINT_ENABLED

The MAINT_ENABLED parameter contains a list of conditions indicating that the device or some part of the device needs maintenance soon.

Below is a list of the conditions:

1. Configuration Error
2. Configuration Warning
3. Simulation Mode
4. Volume / Temperature Measurement Warning
5. Vapor Compensation Warning

Probe ContaminationMAINT_MASK

The MAINT_MASK parameter will mask any of the failed conditions listed in MAINT_ENABLED. A bit on means that the condition is masked out from alarming and will not be reported.

MAINT_PRI

MAINT_PRI designates the alarming priority of the MAINT_ALM, see "Process Alarms" on page 341. The default is 0 and the recommended values are 3 to 7.

MAINT_ACTIVE

The MAINT_ACTIVE parameter displays which of the alarms is active. Only the condition with the highest priority will be displayed. This priority is not the same as the MAINT_PRI parameter described above. This priority is hard coded within the device and is not user configurable.

MAINT_ALM

An alarm indicating that the device needs maintenance soon. If the condition is ignored, the device will eventually fail.

Advisory Alarms

An advisory alarm indicates informative conditions that do not have a direct impact on the primary functions of the device. There are five parameters associated with ADVISE_ALARMS, they are described below.

ADVISE_ENABLED

The ADVISE_ENABLED parameter contains a list of informative conditions that do not have a direct impact on the primary functions of the device. Below is a list of the advisories:

1. Non-Volatile Writes Deferred
2. Electronics Warning - Transducer Block
3. Alerts Simulation

ADVISE_MASK

The ADVISE_MASK parameter will mask any of the failed conditions listed in ADVISE_ENABLED. A bit on means the condition is masked out from alarming and will not be reported.

ADVISE_PRI

ADVISE_PRI designates the alarming priority of the ADVISE_ALM, see “Process Alarms” on page 341. The default is 0 and the recommended values are 1 or 2.

ADVISE_ACTIVE

The ADVISE_ACTIVE parameter displays which of the advisories is active. Only the advisory with the highest priority will be displayed. This priority is not the same as the ADVISE_PRI parameter described above. This priority is hard coded within the device and is not user configurable.

ADVISE_ALM

ADVISE_ALM is an alarm indicating advisory alarms. These conditions do not have a direct impact on the process or device integrity.

H.2.2 Alarm Priority

Alarms are grouped into five levels of priority:

Priority Number	Priority Description
0	The alarm condition is not used.
1	An alarm condition with a priority of 1 is recognized by the system, but is not reported to the operator.
2	An alarm condition with a priority of 2 is reported to the operator.
3-7	Alarm conditions of priority 3 to 7 are advisory alarms of increasing priority.
8-15	Alarm conditions of priority 8 to 15 are critical alarms of increasing priority.

H.2.3 Process Alarms

Process Alarm detection is based on the OUT value. Configure the alarm limits of the following standard alarms:

- High (HI_LIM)
- High high (HI_HI_LIM)
- Low (LO_LIM)
- Low low (LO_LO_LIM)

To avoid alarm chattering when the variable is oscillating around the alarm limit, an alarm hysteresis in percent of the PV span can be set using the ALARM_HYS parameter. The priority of each alarm is set in the following parameters:

- HI_PRI
- HI_HI_PRI
- LO_PRI
- LO_LO_PRI

H.2.4 Recommended actions for Alerts

RECOMMENDED_ACTION

The RECOMMENDED_ACTION parameter displays a text string that will give a recommended course of action to take based on which type and which specific event of the alerts are active.

Table H-1. RB.RECOMMENDED_ACTION

	Alarm Type	Failed/Maint/Advise Active Event	Recommended Action Text String
Alerts	None	None	No action required
	Advisory	Non-Volatile Writes Deferred	Non-volatile writes have been deferred, leave the device powered until the advisory goes away.
		Electronics Warning - Transducer Block	Check device installation and configuration
		Alerts Simulation	Use the switch on the Fieldbus electronics board to turn simulation on or off.
	Maintenance	Probe Contamination	Clean the probe.
		Configuration Error	Load default database to the device and reconfigure it.
		Configuration Warning	Check device configuration
		Simulation Mode	Use **Start / Stop Device Simulation** to enable or disable simulation.
		Vapor Compensation Warning	1. Recalibrate vapor compensation. 2. Check Vapor DC configuration. 3. Check that the correct probe is attached.
		Volume/Temperature Measurement Warning	1. Check volume configuration. 2. Check ambient temperature at installation site. 3. If the surrounding temperature is OK, it might indicate a hardware error producing heat. Replace the transmitter head.
	Failed	Level / Interface Measurement Failure	1. Analyze echo curve for reason and check device configuration. 2. Check device physical installation (for instance probe contamination). 3. Load default database to the device and reconfigure it. 4. If error persists, it might indicate a hardware error. Replace the transmitter head.
		Volume / Temperature Measurement Failure	1. If Level Measurement Failure is active, clear that alert first. 2. Check volume configuration. 3. Load default database to the device and reconfigure it. 4. Check ambient temperature at installation site. 5. If error persists, it might indicate a hardware error. Replace the transmitter head.
		Electronics Failure - Transducer Block	Replace transmitter head.
		Probe Missing	Check that the probe is properly connected.
		Input / Output Failure	Replace the transmitter.
		Non-Volatile Memory Failure	1. Load default database to the device to clear the error. 2. Download a device configuration. 3. If error persists, it may indicate a faulty memory chip. Replace the transmitter head.
		Electronics Failure - Output Board	Replace the transmitter.
		Software Incompatible Error	Replace the device.

Appendix I Analog-Input block

Simulation . . . . . page 346
Damping . . . . . page 347
Signal Conversion . . . . . page 347
Block Errors . . . . . page 348
Modes . . . . . page 349
Alarm Detection . . . . . page 349
Advanced Features . . . . . page 351
Configure the AI Block . . . . . page 352

Figure I-1. Analog-Input Block

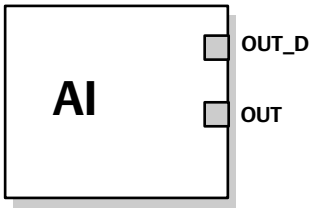

OUT = The block output value and status
OUT_D = Discrete output that signals a selected alarm condition

The Analog Input (AI) function block processes field device measurements and makes them available to other function blocks. The output value from the AI block is in engineering units and contains a status indicating the quality of the measurement. The measuring device may have several measurements or derived values available in different channels. Use the channel number to define the variable that the AI block processes.

The AI block supports alarming, signal scaling, signal filtering, signal status calculation, mode control, and simulation. In Automatic mode, the block's output parameter (OUT) reflects the process variable (PV) value and status. In Manual mode, OUT may be set manually. The Manual mode is reflected on the output status. A discrete output (OUT_D) is provided to indicate whether a selected alarm condition is active. Alarm detection is based on the OUT value and user specified alarm limits. Figure I-2 on page 346 illustrates the internal components of the AI function block, and Table I-1 lists the AI block parameters and their units of measure, descriptions, and index numbers.

Table I-1. Definitions of Analog Input Function Block System Parameters

Parameter	Index Number	Units	Description
ACK_OPTION	23	None	Used to set auto acknowledgment of alarms.
ALARM_HYS	24	Percent	The amount the alarm value must return within the alarm limit before the associated active alarm condition clears.
ALARM_SEL	38	None	Used to select the process alarm conditions that will cause the OUT_D parameter to be set.
ALARM_SUM	22	None	The summary alarm is used for all process alarms in the block. The cause of the alert is entered in the subcode field. The first alert to become active will set the Active status in the Status parameter. As soon as the Unreported status is cleared by the alert reporting task, another block alert may be reported without clearing the Active status, if the subcode has changed.
ALERT_KEY	04	None	The identification number of the plant unit. This information may be used in the host for sorting alarms, etc.
BLOCK_ALM	21	None	The block alarm is used for all configuration, hardware, connection failure or system problems in the block. The cause of the alert is entered in the subcode field. The first alert to become active will set the Active status in the Status parameter. As soon as the Unreported status is cleared by the alert reporting task, another block alert may be reported without clearing the Active status, if the subcode has changed.
BLOCK_ERR	06	None	This parameter reflects the error status associated with the hardware or software components associated with a block. It is a bit string, so that multiple errors may be shown.
CHANNEL	15	None	The CHANNEL value is used to select the measurement value. Refer to the appropriate device manual for information about the specific channels available in each device. You must configure the CHANNEL parameter before you can configure the XD_SCALE parameter.
FIELD_VAL	19	Percent	The value and status from the transducer block or from the simulated input when simulation is enabled.
GRANT_DENY	12	None	Options for controlling access of host computers and local control panels to operating, tuning, and alarm parameters of the block. Not used by device.
HI_ALM	34	None	The HI alarm data, which includes a value of the alarm, a timestamp of occurrence and the state of the alarm.
HI_HI_ALM	33	None	The HI HI alarm data, which includes a value of the alarm, a timestamp of occurrence and the state of the alarm.
HI_HI_LIM	26	EU of PV_SCALE	The setting for the alarm limit used to detect the HI HI alarm condition.
HI_HI_PRI	25	None	The priority of the HI HI alarm.
HI_LIM	28	EU of PV_SCALE	The setting for the alarm limit used to detect the HI alarm condition.
HI_PRI	27	None	The priority of the HI alarm.
IO_OPTS	13	None	Allows the selection of input/output options used to alter the PV. Low cutoff enabled is the only selectable option.
L_TYPE	16	None	Linearization type. Determines whether the field value is used directly (Direct) or is converted linearly (Indirect).

Parameter	Index Number	Units	Description
LO_ALM	35	None	The LO alarm data, which includes a value of the alarm, a timestamp of occurrence and the state of the alarm.
LO_LIM	30	EU of PV_SCALE	The setting for the alarm limit used to detect the LO alarm condition.
LO_LO_ALM	36	None	The LO LO alarm data, which includes a value of the alarm, a timestamp of occurrence and the state of the alarm.
LO_LO_LIM	32	EU of PV_SCALE	The setting for the alarm limit used to detect the LO LO alarm condition.
LO_LO_PRI	31	None	The priority of the LO LO alarm.
LO_PRI	29	None	The priority of the LO alarm.
LOW_CUT	17	%	If percentage value of transducer input fails below this, PV = 0.
MODE_BLK	05	None	The actual, target, permitted, and normal modes of the block. Target: The mode to “go to” Actual: The mode the “block is currently in” Permitted: Allowed modes that target may take on Normal: Most common mode for target
OUT	08	EU of OUT_SCALE	The block output value and status.
OUT_D	37	None	Discrete output to indicate a selected alarm condition.
OUT_SCALE	11	None	The high and low scale values, engineering units code, and number of digits to the right of the decimal point associated with OUT.
PV	07	EU of XD_SCALE	The process variable used in block execution.
PV_FTIME	18	Seconds	The time constant of the first-order PV filter. It is the time required for a 63% change in the IN value.
SIMULATE	09	None	A group of data that contains the current transducer value and status, the simulated transducer value and status, and the enable/disable bit.
STRATEGY	03	None	The strategy field can be used to identify grouping of blocks. This data is not checked or processed by the block.
ST_REV	01	None	The revision level of the static data associated with the function block. The revision value will be incremented each time a static parameter value in the block is changed.
TAG_DESC	02	None	The user description of the intended application of the block.
UPDATE_EVT	20	None	This alert is generated by any change to the static data.
VAR_INDEX	39	% of OUT Range	The average absolute error between the PV and its previous mean value over that evaluation time defined by VAR_SCAN.
VAR_SCAN	40	Seconds	The time over which the VAR_INDEX is evaluated.
XD_SCALE	10	None	The high and low scale values, engineering units code, and number of digits to the right of the decimal point associated with the channel input value.

I.1 Simulation

To support testing, you can either change the mode of the block to manual and adjust the output value, or you can enable simulation through the configuration tool and manually enter a value for the measurement value and its status. In both cases, you must first set the ENABLE jumper on the field device.

NOTE:
All fieldbus instruments have a simulation jumper. As a safety measure, the jumper has to be reset every time there is a power interruption. This measure is to prevent devices that went through simulation in the staging process from being installed with simulation enabled.

With simulation enabled, the actual measurement value has no impact on the OUT value or the status.

Figure I-2. Analog Input Function Block Schematic

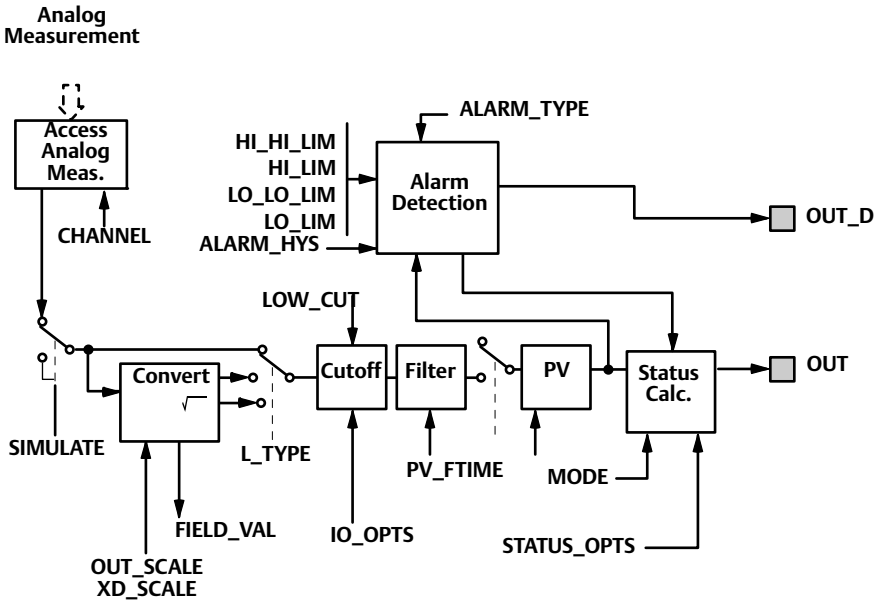

NOTES:
OUT = block output value and status.
OUT_D = discrete output that signals a selected alarm condition.

Figure I-3. Analog Input Function Block Timing Diagram

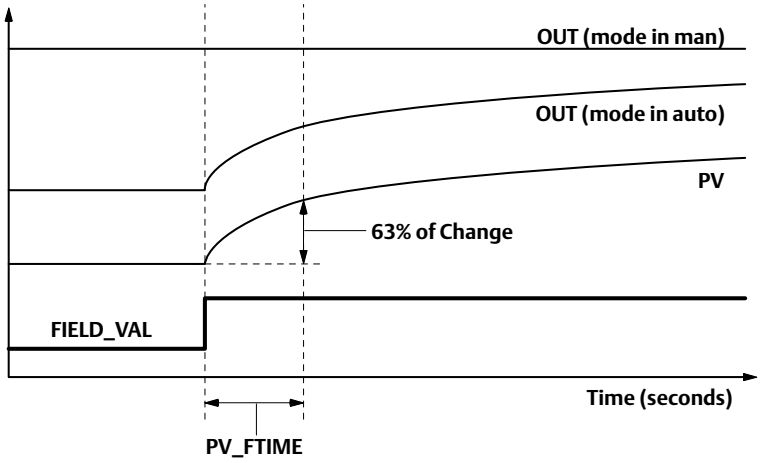

I.2 Damping

The filtering feature changes the response time of the device to smooth variations in output readings caused by rapid changes in input. You can adjust the filter time constant (in seconds) using the PV_FTIME parameter. Set the filter time constant to zero to disable the filter feature.

I.3 Signal Conversion

You can set the signal conversion type with the Linearization Type (L_TYPE) parameter. You can view the converted signal (in percent of XD_SCALE) through the FIELD_VAL parameter.

$$\text{FIELD\_VAL} = \frac{100 \times (\text{Channel Value} - \text{EU*@0\%})}{(\text{EU*@100\%} - \text{EU*@0\%})}$$

* XD_SCALE values

You can choose from direct or indirect signal conversion with the L_TYPE parameter.

Direct

Direct signal conversion allows the signal to pass through the accessed channel input value (or the simulated value when simulation is enabled).

$$\text{PV} = \text{Channel Value}$$

Indirect

Indirect signal conversion converts the signal linearly to the accessed channel input value (or the simulated value when simulation is enabled) from its specified range (XD_SCALE) to the range and units of the PV and OUT parameters (OUT_SCALE).

$$\text{PV} = \left(\frac{\text{FIELD\_VAL}}{100}\right) \times (\text{EU**@100\%} - \text{EU**@0\%}) + \text{EU**@0\%}$$

** OUT_SCALE values

Indirect Square Root

Indirect Square Root signal conversion takes the square root of the value computed with the indirect signal conversion and scales it to the range and units of the PV and OUT parameters..

$$PV = \sqrt{\left(\frac{FIELD\_VAL}{100}\right)} \times (EU^{**}@100\% - EU^{**}@0\%) + EU^{**}@0\%$$

** OUT_SCALE values

When the converted input value is below the limit specified by the LOW_CUT parameter, and the Low Cutoff I/O option (IO_OPTS) is enabled (True), a value of zero is used for the converted value (PV). This option is useful to eliminate false readings when the differential pressure measurement is close to zero, and it may also be useful with zero-based measurement devices such as flowmeters.

NOTE:
Low Cutoff is the only I/O option supported by the AI block. You can set the I/O option in **Manual** or **Out of Service** mode only.

I.4 Block Errors

Table I-2 lists conditions reported in the BLOCK_ERR parameter.

Table I-2. BLOCK_ERR Conditions

Condition Number	Condition Name and Description
0	Other
1	**Block Configuration Error:** the selected channel carries a measurement that is incompatible with the engineering units selected in XD_SCALE, the L_TYPE parameter is not configured, or CHANNEL = zero.
2	Link Configuration Error
3	**Simulate Active:** Simulation is enabled and the block is using a simulated value in its execution.
4	Local Override
5	Device Fault State Set
6	Device Needs Maintenance Soon
7	**Input Failure/Process Variable has Bad Status:** The hardware is bad, or a bad status is being simulated.
8	**Output Failure:** The output is bad based primarily upon a bad input.
9	Memory Failure
10	Lost Static Data
11	Lost NV Data
12	Readback Check Failed
13	Device Needs Maintenance Now
14	Power Up
15	**Out of Service:** The actual mode is out of service.

I.5 Modes

The AI Function Block supports three modes of operation as defined by the MODE_BLK parameter:

- **Manual (Man)** The block output (OUT) may be set manually
- **Automatic (Auto)** OUT reflects the analog input measurement or the simulated value when simulation is enabled
- **Out of Service (O/S)** The block is not processed. FIELD_VAL and PV are not updated and the OUT status is set to Bad: Out of Service. The BLOCK_ERR parameter shows Out of Service. In this mode, you can make changes to all configurable parameters. The target mode of a block may be restricted to one or more of the supported modes.

I.6 Alarm Detection

A block alarm will be generated whenever the BLOCK_ERR has an error bit set. The types of block error for the AI block are defined above.

Process Alarm detection is based on the OUT value. You can configure the alarm limits of the following standard alarms:

- High (HI_LIM)
- High high (HI_HI_LIM)
- Low (LO_LIM)
- Low low (LO_LO_LIM)

In order to avoid alarm chattering when the variable is oscillating around the alarm limit, an alarm hysteresis in percent of the PV span can be set using the ALARM_HYS parameter. The priority of each alarm is set in the following parameters:

- HI_PRI
- HI_HI_PRI
- LO_PRI
- LO_LO_PRI

Alarms are grouped into five levels of priority:

Table I-3. Alarm level priority

Priority Number	Priority Description
0	The priority of an alarm condition changes to 0 after the condition that caused the alarm is corrected.
1	An alarm condition with a priority of 1 is recognized by the system, but is not reported to the operator.
2	An alarm condition with a priority of 2 is reported to the operator, but does not require operator attention (such as diagnostics and system alerts).
3-7	Alarm conditions of priority 3 to 7 are advisory alarms of increasing priority.
8-15	Alarm conditions of priority 8 to 15 are critical alarms of increasing priority.

I.6.1 Status Handling

Normally, the status of the PV reflects the status of the measurement value, the operating condition of the I/O card, and any active alarm condition. In Auto mode, OUT reflects the value and status quality of the PV. In Man mode, the OUT status constant limit is set to indicate that the value is a constant and the OUT status is *Good*.

The **Uncertain** - EU range violation status is always set, and the PV status is set high- or low-limited if the sensor limits for conversion are exceeded.

In the STATUS_OPTS parameter, you can select from the following options to control the status handling:

BAD if Limited – sets the OUT status quality to *Bad* when the value is higher or lower than the sensor limits.

Uncertain if Limited – sets the OUT status quality to *Uncertain* when the value is higher or lower than the sensor limits.

Uncertain if in Manual mode – The status of the Output is set to *Uncertain* when the mode is set to Manual.

NOTE:
The instrument must be in **Manual** or **Out of Service** mode to set the status option.
The AI block only supports the **BAD if Limited** option. Unsupported options are not grayed out; they appear on the screen in the same manner as supported options.

I.7 Advanced Features

The AI function block provided with Fisher-Rosemount fieldbus devices provides added capability through the addition of the following parameters:

ALARM_TYPE – Allows one or more of the process alarm conditions detected by the AI function block to be used in setting its OUT_D parameter.

OUT_D – Discrete output of the AI function block based on the detection of process alarm condition(s). This parameter may be linked to other function blocks that require a discrete input based on the detected alarm condition.

VAR_SCAN – Time period in seconds over which the variability index (VAR_INDEX) is computed.

VAR_INDEX – Process variability index measured as the integral of average absolute error between PV and its mean value over the previous evaluation period. This index is calculated as a percent of OUT span and is updated at the end of the time period defined by VAR_SCAN.

I.8 Configure the AI Block

⚠ A minimum of four parameters are required to configure the AI Block. The parameters are described below with example configurations shown at the end of this section.

CHANNEL

Select the channel that corresponds to the desired sensor measurement. The Rosemount 5300 measures Level (channel 1), Distance (channel 2), Level Rate (channel 3), Signal Strength (channel 4), Volume (channel 5), Internal Temperature (channel 6), Upper Product Volume (channel 7), Lower Product Volume (channel 8), Interface Distance (channel 9), Upper Product Thickness (channel 10), Interface Level (channel 11), Interface Level Rate (channel 12), and Interface Signal Strength (channel 13).

AI Block	TB Channel Value	Process Variable
Level	1	CHANNEL_RADAR_LEVEL
Ullage	2	CHANNEL_RADAR_ULLAGE
Level Rate	3	CHANNEL_RADAR_LEVELRATE
Signal Strength	4	CHANNEL_RADAR_SIGNAL_STRENGTH
Volume	5	CHANNEL_RADAR_VOLUME
Internal Temperature	6	CHANNEL_RADAR_INTERNAL_TEMPERATURE
Upper Product Volume	7	CHANNEL_UPPER_PRODUCT_VOLUME
Lower Product Volume	8	CHANNEL_LOWER_ PRODUCT_VOLUME
Interface Distance	9	CHANNEL_INTERFACE_ DISTANCE
Upper Product Thickness	10	CHANNEL_UPPER_ PRODUCT_THICKNESS
Interface Level	11	CHANNEL_INTERFACE_LEVEL
Interface Level Rate	12	CHANNEL_INTERFACE_ LEVELRATE
Interface Signal Strength	13	CHANNEL_INTERFACE_ SIGNALSTRENGTH
Signal Quality	14	CHANNEL_SIGNAL_QUALITY
Surface/Noise Margin	15	CHANNEL_ SURFACE_NOISE_MARGIN
Vapor DC	16	CHANNEL_VAPOR_DC

L_TYPE

The L_TYPE parameter defines the relationship of the transmitter measurement (Level, Distance, Level Rate, Signal Strength, Volume, and Average Temperature) to the desired output of the AI Block. The relationship can be direct or indirect root.

Direct

Select direct when the desired output will be the same as the transmitter measurement (Level, Distance, Level Rate, Signal Strength, Volume, and Average Temperature).

Indirect

Select indirect when the desired output is a calculated measurement based on the transmitter measurement (Level, Distance, Level Rate, Signal Strength, Volume, and Average Temperature).

The relationship between the transmitter measurement and the calculated measurement will be linear.

Indirect Square Root

Select indirect square root when the desired output is an inferred measurement based on the transmitter measurement and the relationship between the sensor measurement and the inferred measurement is square root (e.g. level).

XD_SCALE and OUT_SCALE

The XD_SCALE and OUT_SCALE each include three parameters: 0%, 100%, and, engineering units. Set these based on the L_TYPE:

L_TYPE is Direct

When the desired output is the measured variable, set the XD_SCALE to represent the operating range of the process. Set OUT_SCALE to match XD_SCALE.

L_TYPE is Indirect

When an inferred measurement is made based on the sensor measurement, set the XD_SCALE to represent the operating range that the sensor will see in the process. Determine the inferred measurement values that correspond to the XD_SCALE 0 and 100% points and set these for the OUT_SCALE.

L_TYPE is Indirect Square Root

When an inferred measurement is made based on the transmitter measurement and the relationship between the inferred measurement and sensor measurement is square root, set the XD_SCALE to represent the operating range that the sensor will see in the process. Determine the inferred measurement values that correspond to the XD_SCALE 0 and 100% points and set these for the OUT_SCALE.

NOTE:
To avoid configuration errors, only select Engineering Units for XD_SCALE and OUT_SCALE that are supported by the device. The supported units are:

Table I-4. Length

Display	Description
m	meter
cm	centimeter
mm	millimeter
ft	feet
in	inch

Table I-5. Level Rate

Display	Description
m/s	meter per second
m/h	meter per hour
ft/s	feet per second
in/m	inch/minute

Table I-6. Temperature

Display	Description
°C	Degree Celsius
°F	Degree Fahrenheit

Table I-7. Signal Strength

Display	Description
mV	millivolt

Table I-8. Volume

Display	Description
m^3	Cubic meter
L	Liter
in^3	Cubic inch
ft^3	Cubic feet
Yd^3	Cubic yard
Gallon	US gallon
ImpGall	Imperial gallon
bbl	barrel

Index

Numerics

375 Field Communicator 81, 82
475 Field Communicator 81, 82
751 Field Signal Indicator 12, 66

A

Address
  Temporary node 111
Agitators 19, 34
AI Block
  Configuration 113
  Parameters
    ALARM_TYPE 351
    BLOCK_ERR 348, 349
    IO_OPTS 348
    L_TYPE 347
    LOW_CUT 348
    OUT_D 351
    OUT_SCALE 347
    PV_FTIME 347
    VAR_INDEX 351
    VAR_SCAN 351
    XD_SCALE 347
  Status 350
Alarm Priority 341
ALARM_TYPE
  AI Block 351
Alarms
  Priority 341
  Process 341
AMS Suite 12, 105
Analog Input (AI) Block 113, 184, 343
  BLOCK_ERR 184
  Troubleshooting 184
Analog Input (AI) Function Block 184
Analog Output
  Alarm values 81
  Calibration 151
  Saturation values 81
Applications 7
Approval
  Information 253
Approval Drawings 271
Archive Device 103

B

Blind Zones 15, 71, 80, 206
Block Configuration
  AI Block 113
Block Errors 184
BLOCK_ERR
  AI Block 184, 348, 349
  Resource Block 182
Bracket Mounting 40
Bridging 16
BSP/G threads 39
Burst Mode 122, 124
Burst option 123

C

Cable selection 55
Cable/conduit entries 54
Calculation Method 110
Calibration 152
Calibration Distance 101
Calibration Offset 279
Centering piece 43
Certifications 253
Changing the Probe 165
Channel 114, 312, 352
Channel Definitions
  Level Transducer Block 312
Coating 16
COM Port 86
Configuration
  Analog Input (AI) Function Block
    OUT_SCALE 115, 353
    XD_SCALE 115, 353
  Basic 74
  Channel 114, 352
  Direct 115, 353
  Field Communicator 81
  Guided Setup 90
  Indirect 115, 353
  L_TYPE 114, 352
    Direct 114, 352
    Indirect 115, 352, 353
  Rosemount Radar Master 84
  Volume 77
Current loop resistance 56

D

Device ID 106
Device specific setup 99
Device Tag 111
Diagnostics measurements 304
Dielectric Constant 6, 17, 77, 95, 96, 109, 294
Dielectric Constant Calculator 96
Dielectric Constant Chart 96
Direct 114, 115, 352, 353
Direct Signal Conversion 347

Display
Presentation 128
Variables 68, 128, 129
Display panel 129
Display panel variables 129
Dynamic Vapor Compensation 295

E

Electrical installation
Connecting the transmitter 57, 60
Intrinsically Safe Output 59, 64
Non-Intrinsically Safe Output 58, 63
Tri-Loop 65, 66
Emulsion layers 19
European ATEX Directive Information 259

F

Factory Mutual
system control drawing 272
Field Communicator 81
Menu tree 83
Field Signal Indicator 12
Filtering
AI Block 347
Flange connection 25
Foam 16
Free Space 33

G

Geometry 108
Grounding 54

H

Heating coils 19, 34
HI_HI_LIM 341
HI_HI_PRI 341
HI_LIM 341
HI_PRI 341
Hold Off Distance
Upper Null Zone (UNZ) 74
Hold Off Distance/Upper Null Zone 76, 107, 282
Hold Off Distance/Upper Null Zone (UNZ) 80

I

Indirect 115, 352, 353
Indirect Signal Conversion 347, 348
Installation 5
Cable selection 55
Cable/conduit entries 54
Flange connection 25
Free space 33
Grounding 54
Mounting considerations 24
Mounting position 34
Power requirements 55, 60
Procedure 21
Shortening the probe 41
Threaded connection 24
Interface 17
Low dielectric constants 148
Introduction 1
IO_OPTS
AI Block 348

L

L_TYPE 114, 352
AI Block 347
Direct 114, 352
Indirect 115, 352, 353
LCD 129
LCD variables 89
Level and Distance Calibration 152
Level Transducer Block 112
Channel Definitions 312
LO_LIM 341
LO_LO_LIM 341
LO_LO_PRI 341
LO_PRI 341
Loop-powered 12
LOW_CUT
AI Block 348
Lower Blind Zone 15, 80, 196
Lower product
Dielectric constant 294
Lower Product Dielectric Range 294

M

Maximum load resistance 58, 59
Measurement Mode 76, 95, 108
Measurement principle 6
Measuring range 208
Mounting position 34
Mounting Type 75, 94
Multidrop connection 124
Multidrop Mode 124

N

NAMUR-Compliant Alarm 81
Node address 111
Non-metallic tanks 26
Nozzle Height 75, 94

NPT threads 39

O

OUT_D
AI Block 351
OUT_SCALE 115, 353
AI Block 347
L_TYPE
Direct 115, 353
Indirect 115, 353

P

Parameter
BLOCK_ERR 182, 184
CHANNEL 114, 352
HI_HI_LIM 341
HI_HI_PRI 341
HI_LIM 341
HI_PRI 341
L_TYPE 114, 115, 352, 353
LO_LIM 341
LO_LO_LIM 341
LO_LO_PRI 341
LO_PRI 341
OUT_SCALE 115, 353
Resource Block 333
XD_SCALE 115, 353
Pipe installations
Centering disc 47
Plate design 38
Poll address 124
Power requirements 55, 60
Power supply 55
Probe
Anchoring 44
Changing 167
Shortening 41
Probe Length 74, 76, 93, 107
Probe Type 10, 76, 93, 107
Process Alarms 341
Process connection 24
Product certifications 253
Product Dielectric Range 77
PV_FTIME
AI Block 347

R

Range Values 80
Rapid Level Changes 77
Recommended mounting position 34
Reference Threshold 304
Register Transducer Block 112
Remote Housing 41
Resource Block 112, 182, 333
Block Errors 182
Detailed Status 182
Parameters 333
BLOCK_ERR 182
PlantWeb™ Alerts
Advisory alarms 340
Failed_alarms 337
Maint_alarms 339
Recommended actions 341
Summary Status 182
Rosemount 751 12
Rosemount Radar Master 84
RRM 84
COM Port 86
Setup 89

S

Setup
Advanced 89
Echo Curve 89
General 89
Output 89
Tank 89
Signal Conversion
Direct 347
Indirect 347, 348
Signal Quality 304
Signal Quality Metrics 304
Simulation 346
Jumper 346
Spacers 42
Standard tank shapes 79
Static compensation 295
Status
AI Block 350
Strapping Table 78, 110
Supported units 116, 353
Surface Noise Margin 304
Surface peak amplitude 304
Surface threshold (ATC) 304
System architecture 12

T

Tag
Device 111
Tank connection 37
Flange 37, 38
Threaded 39
Tank environment 76
Tank Geometry 74
Tank Height 74, 75, 94
Tank shape 20, 79
Tank Type 78
Threaded connection 24
Time Domain Reflectometry 6

Transmitter housing 10
Transmitter Reference Point 279
Tri-Loop. 12, 65, 122
Troubleshooting
    Analog Input (AI) Block 184
    Resource Block 182
Turbulent conditions 34

U

UNZ. 25, 76, 107, 282
Upper Blind Zone 15, 80, 196
Upper Null Zone 25, 76, 80, 107, 282
Upper Product Dielectric Constant. 17, 77, 95
Upper Product Dielectric Constant Calculator 96
Upper Reference Point 75, 279

V

Vapor 16, 294
VAR_INDEX
    AI Block 351
VAR_SCAN
    AI Block 351
Verify Level 101
Vessel characteristics 19
Volume Configuration 77
Volume Offset. 110

W

Waveform plot 139

X

XD_SCALE 115, 353
    AI Block 347
    L_TYPE
        Direct 115, 353
        Indirect 115, 353

Reference Manual
00809-0100-4530, Rev CA
January 2014

Emerson Process Management
Rosemount Measurement
8200 Market Boulevard
Chanhassen MN 55317 USA
Tel (USA) 1 800 999 9307
Tel (International) +1 952 906 8888
Fax +1 952 906 8889

Emerson Process Management
Blegistrasse 23
P.O. Box 1046
CH 6341 Baar
Switzerland
Tel +41 (0) 41 768 6111
Fax +41 (0) 41 768 6300

Emerson FZE
P.O. Box 17033
Jebel Ali Free Zone
Dubai UAE
Tel +971 4 811 8100
Fax +971 4 886 5465

Emerson Process Management
Asia Pacific Pte Ltd
1 Pandan Crescent
Singapore 128461
Tel +65 6777 8211
Fax +65 6777 0947
Service Support Hotline: +65 6770 8711
Email: Enquiries@AP.EmersonProcess.com

Emerson Process Management
Latin America
1300 Concord Terrace, Suite 400
Sunrise Florida 33323 USA
Tel +1 954 846 5030

Emerson Beijing Instrument Co
No.6 North Street, Hepingli
Dongcheng District, Beijing
100013
China
Tel +8610 64282233
Fax +8610 642 87640

Standard Terms and Conditions of Sale can be found at www.rosemount.com/terms_of_sale
The Emerson logo is a trademark and service mark of Emerson Electric Co.
Rosemount, the Rosemount logotype, and SMART FAMILY are registered trademarks of Rosemount Inc.
Asset Management Solutions is a trademark of Emerson Process Management.
HART and WirelessHART are registered trademarks of the HART Communication Foundation.
AMS Suite is a trademark of Emerson Process Management.
Foundation fieldbus is a registered trademark of the Fieldbus Foundation.
Kalrez is a registered trademark of DuPont Performance Elastomers.
Eurofast and Minifast are registered trademarks of Turck Inc.
All other marks are the property of their respective owners.

© January 2014 Rosemount, Inc. All rights reserved.

ROSEMOUNT

EMERSON
Process Management

Bimetal Thermometer
Model TI.52, Stainless Steel Case & Wetted Parts

Applications

- Suitable for fluid medium which does not corrode 304 stainless steel

Special features

- Industrial design
- Adjustable angle connection with external reset
- Stainless steel case and wetted parts



Thermometer TI.52

Standard version

Size
5” (127mm) Type TI.52

Accuracy
+ 1.0% full scale value (ASME B40.3)

Ranges
-100 °F to 1000 °F (and equivalent Celsius)

Working Range
Steady: full scale value
Short time: 110% of full scale value

Over Range
Temporary over or under range tolerance of 50% of scale up to 500 °F. (260°C). For ranges above 500°F, maximum over range is 800°F; continous. 1000°F intermittent.

Connection
Material: 304 stainless steel
Adjustable angle, 1/2” NPT

Stem
Material: 304 stainless steel
Diameter: 1/4” (6.35 mm)
Length: 2½” to 72” (63.5 mm to 1,828.8 mm)

Measuring Element
Bi-metal helix

Dial
White aluminum, dished, with black markings

Case
Material: 304 stainless steel
Hermetically sealed per ASME B40.3 standard
Ingress protection IP 65
External reset slotted hex head on back of case

Pointer
Black aluminum

Standard Scales
Single: Fahrenheit or Celsius
Dual: Fahrenheit (outer) and Celsius (inner)

Window Gasket
Neoprene
Silicone (-100 °F and over 550 °F)

Window
Flat instrument glass

Weight
26 oz. (5” dial)
Add 1 oz for every 2” of stem length

Dampening
Inert gel to minimize pointer oscillation

Movement
Viscous inert gel to enhance pointer operation

Warranty
7- Year Warranty

WIKA®
Part of your business

Optional Extras

- Thermowells
- Silicone fill
- Dampened Movement
- Special scales and dial markings
- Acrylic and safety glass windows
- Calibration certification traceable to NIST
- Min/max pointer
- DIN standards

STANDARD RANGES		
Fahrenheit	Dual Scale F & C	Celsius
Single Scale	F Outer, C Inner	Single Scale
-100/150 F	-100/150 F & -70/70 C	-50/50 C
-40/120 F	40/120 F & -40/50 C	-20/120 C
0/140 F	0/140 F & -20/60 C	0/50 C[1]
0/200 F	0/200 F & -15/90 C	0/100 C
0/250 F	0/250 F & -20/120 C	0/150 C
20/240 F	20/240 F & -5/115 C	0/200 C
25/125 F[1]	25/125 F & -5/50 C[1]	0/250 C
50/300 F	50/300 F & 10/150 C	0/300 C
50/400 F	50/400 F & 10/200 C	0/450 C[2]
50/550 F	50/500 F & 10/260 C	100/550 C[2]
150/750 F	150/750 F & 65/400 C	
200/1000 F[2]	200/1000 F & 100/540 C[2]	

[1]Minimum stem length 4" for Type 52

[2]Not recommended for continous service over 800°F (425°C)

Dimensions

Standard versions

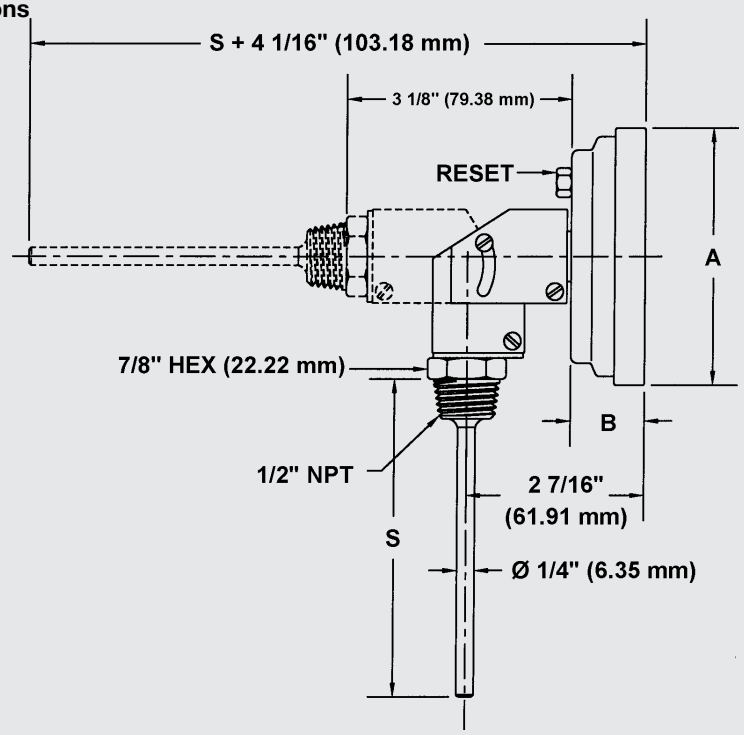

Stem Length
2½" (63.5 mm)
4" (101.6 mm)
6" (152.4 mm)
9" (228.6 mm)
12" (304.8 mm)
15" (381.0 mm)
18" (457.2 mm)
24" (609.6 mm)

WIKA Type	DIAL SIZE	A	B	S (Stem Length)
52	5" (127 mm)	5-1/4" (133.35 mm)	15/16" (23.8 mm)	As Specified

Note: Thermowells for temperature instruments are recommended for all process systems where pressure, velocity, or viscous, abrasive and corrosive materials are present individually or in combination. A properly selected thermowell protects the temperature instrument from possible damage resulting from these process variables. Furthermore, a thermowell permits removal of the temperature instrument for replacement, repair or testing without effecting the process media or the system.

Ordering information
State computer part number (if available) /type number/size/range/connection size and locations/options required. WIKA reserves the right to make changes without prior notice.

WIKA Instrument Corporation
1000 Wiegand Boulevard
Lawrenceville, GA 30043
1-888-WIKA-USA /770-513-8200 (in GA)
Fax 770-338-5118
info@wika.com www.wika.com


WIKA
THERMOWELLS

WIKA Instruments is a temperature sensor and instrument manufacturing company. It was established in 1978 to meet the growing needs of the global temperature market and has expanded to offer services unparalleled in today's temperature industry.

This catalogue provides information on a complete line of thermowells designed to meet the most stringent temperature measurement applications. WIKA Instruments also manufactures specialty products not listed in this catalogue to solve specific applications in temperature measurement.



WIKA Instruments is committed to providing our customer with a quality product at a competitive price, first time, every time.

WIKA Instruments Ltd. Thermowell Catalogue, Copyright 2006

Table of Contents

Thermowell Section

Page

AQ, BQ, CQ Threaded Style Quick Order Thermowells 3-1
A-Style Threaded Tapered Thermowells 3-2
B-Style Threaded Straight Thermowells 3-3
C-Style Threaded Stepped Thermowells 3-4

D-Style Socket Tapered Thermowells 3-5
E-Style Socket Straight Thermowells 3-6
F-Style Socket Stepped Thermowells 3-7

G-Style Weld-In Tapered Thermowells 3-8
H-Style Weld-In Straight Thermowells 3-9
J-Style Weld-In Stepped Thermowells 3-10

KQ, LQ, MQ Flanged Style Quick Order Thermowells 3-11
K-Style Flanged Tapered Thermowells 3-12
L-Style Flanged Straight Thermowells 3-14
M-Style Flanged Stepped Thermowells 3-16

N-Style Vanstone Tapered Thermowells 3-18
P-Style Vanstone Straight Thermowells 3-19
Q-Style Vanstone Stepped Thermowells 3-20

R-Style Wrench Flat Tapered Thermowells 3-21
S-Style Wrench Flat Straight Thermowells 3-22
T-Style Wrench Flat Stepped Thermowells 3-23

SC4T-Style Hygienic (Sanitary) Tapered Thermowells 3-24
SC3S-Style Hygienic (Sanitary) Straight Thermowells 3-25
SC2R-Style Hygienic (Sanitary) Stepped Thermowells 3-26

Metal Protection Tube Assemblies 3-27

Options 3-28

Material Codes 3-29

Material Selection Guide 3-30

Reference Section

Pipe Size Chart 3-33
Conversion Table 3-33

ISO 9000 Quality Assurance Program 3-34
Thermowells as a Pressure Fitting 3-34
Temperature Sensors in Hazardous Locations 3-34

Positive Material Identification (PMI) 3-35
Liquid Penetrant Inspection (LPI) 3-35
Hydrostatic Pressure Testing (External and Internal) 3-35

Surface Finish 3-36
Flange Face Surface Finish 3-36
Welding 3-36
Overlays 3-37

Thermowell Design Guide 3-39

Fax Inquiry Form 3-45

WIKA Instruments Ltd. Thermowell Catalogue, Copyright 2006

Quick Order Thermowells
Styles A, B & C

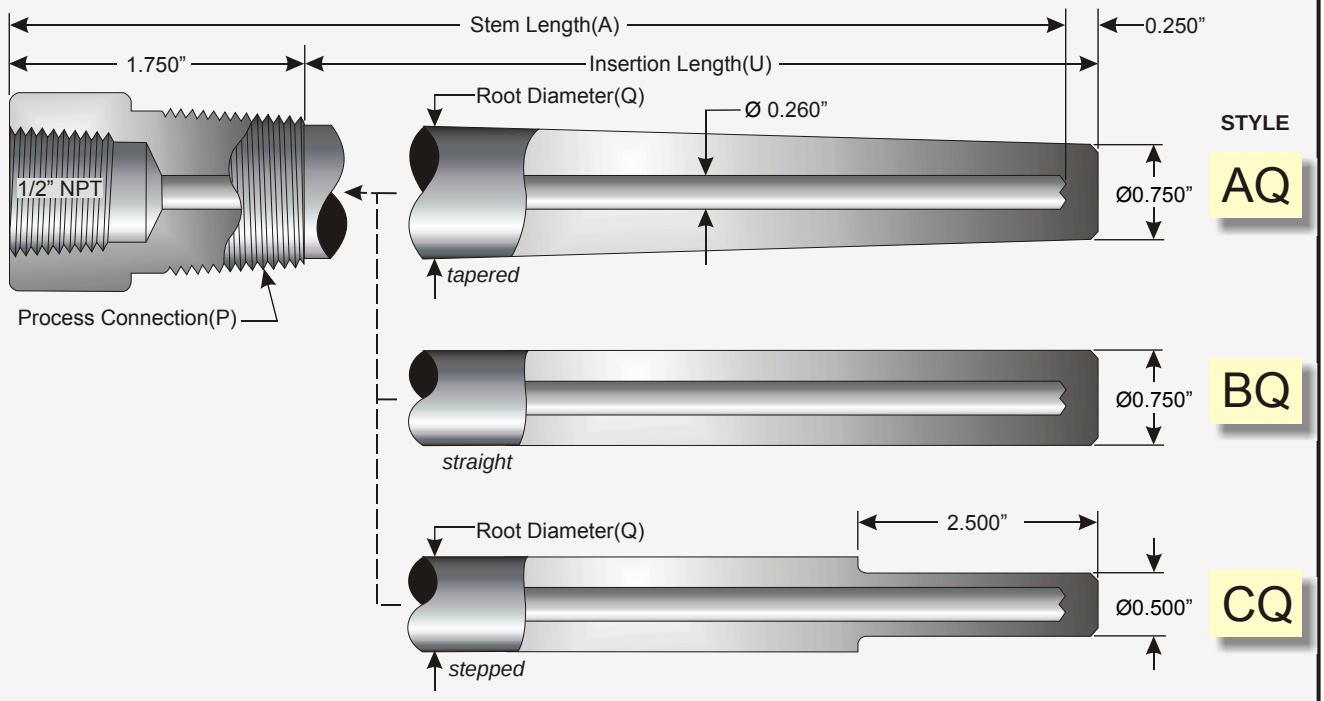

Note:
The thermowell styles on this page have the following default fixed values of:
Root Diameter (Q).....0.875” dia. For 3/4” NPT, 1.063” dia. For 1” NPT, *style AQ only*
0.750” dia. For 3/4” NPT, 0.875” dia. For 1” NPT, *style CQ only*

Please refer to the WIKA Instruments “Thermowell Catalogue” for customized solutions to the above values.

Ordering Code

□ - □ - □ - □ - □ - Options

Style
AQ
BQ
CQ

Process Connection(P)
34 = 3/4” NPT
10 = 1” NPT

Insertion Length(U)
in decimal inches

Stem Length(A)
in decimal inches
Max. 20”

Material Code(M)
R/RL=316/316L SS
P/PL=304/304L SS

Options
refer to page 3-28 of the “Thermowell Catalogue”

reference material



WIKA Instruments
Thermowell Catalogue

Sample Order Code: AQ-10-6.000-7.500-R/RL - *options*

WIKA Instruments Ltd. Thermowell Catalogue, Copyright 2006

A-Style Threaded Tapered Thermowells

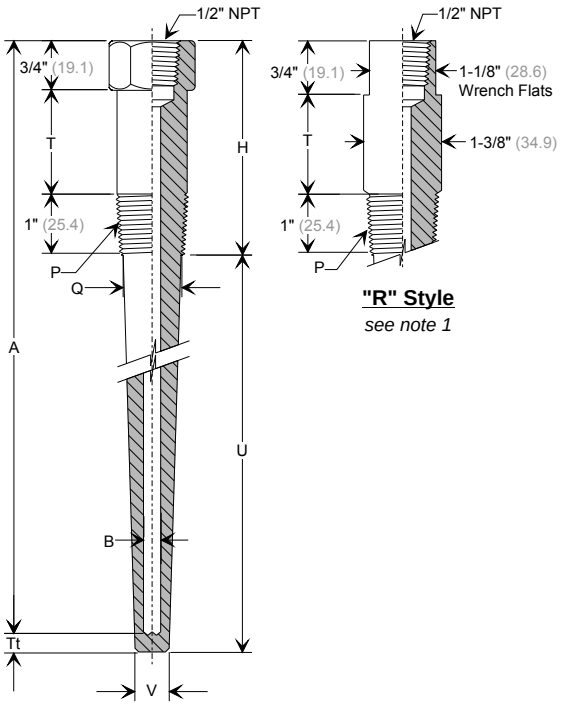

"R" Style
see note 1

"A" Style

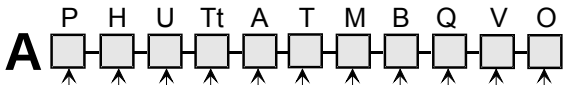

P - Process Connection
34 = 3/4" NPT
10 = 1" NPT
Other

H - Head Length
1.750" (44.5), *min.*
Other

U - Insertion Length
decimal units

Tt - Tip Thickness
0.250" (6.4)
Other

A - Stem Length
decimal units

T - Lag Length
decimal units

M - Material
refer to table 2.0 on page 3-29

B - Bore Size
0.260" (6.6)
0.385" (9.8)
Other

Q - Root Diameter
1.063" (27.0), *for 1" NPT*
0.875" (22.2), *for 3/4" NPT*
Other

V - Tip Diameter
0.625" (15.9)
0.750" (19.1)
Other

O - Options
refer to page 3-28

Sample Part No.: A34 - 4.000" - 6.000" - 0.250" - 9.750" - 2.250" - R/RL - 0.260" - 0.875" - 0.750" - DR11a, SC3

Notes

1. Use an 'R-Style' thermowell when the Stem Length 'A' is greater than 20" (508) or when using round bar. Refer to table 2.0 on page 3-29 for readily available bar types
2. Contact a sales representative when requiring a thermowell not listed in this catalogue.
3. Metric dimensions are in brackets.

WIKA Instruments Ltd. Thermowell Catalogue, Copyright 2006

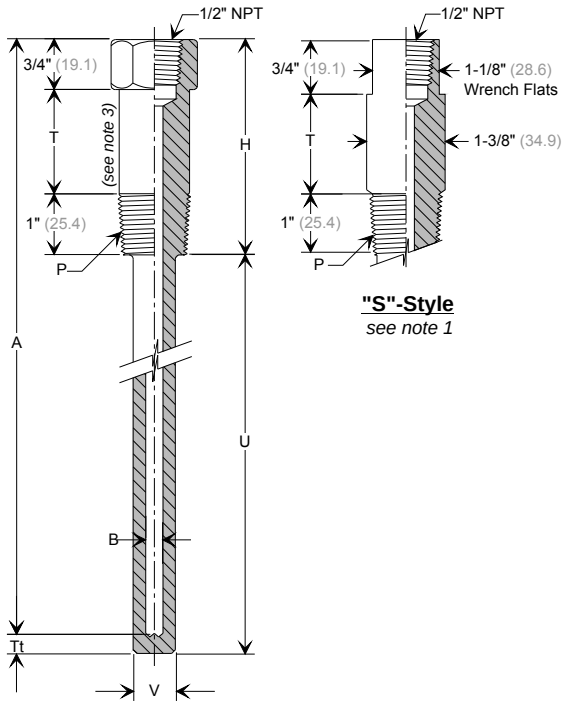

"S"-Style
see note 1

"B"-Style

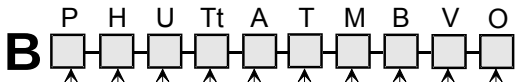

P - Process Connection
12 = 1/2" NPT, *see note 3*
34 = 3/4" NPT
10 = 1" NPT
Other

H - Head Length
1.750" (44.5), *min. for 3/4" & 1" NPT*
2.000" (50.8), *min. for 1/2" NPT, see note 3*
Other

U - Insertion Length
decimal units

Tt - Tip Thickness
0.250" (6.4)
Other

A - Stem Length
decimal units

T - Lag Length
decimal units

M - Material
refer to table 2.0 on page 3-29

B - Bore Size
0.260" (6.6)
0.385" (9.8)
0.512" (13.0)
0.702" (17.8)
Other

V - Tip Diameter
0.625" (15.9), *for 1/2" NPT*
0.750" (19.1), *for 3/4" NPT*
0.875" (22.2), *for 1" NPT*
Other

O - Options
refer to page 3-28

Sample Part No.: B34 - 4.000" - 6.000" - 0.250" - 9.750" - 2.250" - R/RL - 0.260" - 0.750" -DR11a, SC3

Notes

1. Use an 'S-Style' thermowell when the Stem Length 'A' is greater than 20" (508) or when using round bar. Refer to table 2.0 on page 3-29 for readily available bar types.
2. Contact a sales representative when requiring a thermowell not listed in this catalogue.
3. For 1/2" NPT process connection the hex length is 1-1/8" (28.6) and the thread length is 7/8" (22.2).
4. Metric dimensions are in brackets.

WIKA Instruments Ltd. Thermowell Catalogue, Copyright 2006

C-Style Threaded Stepped Thermowells

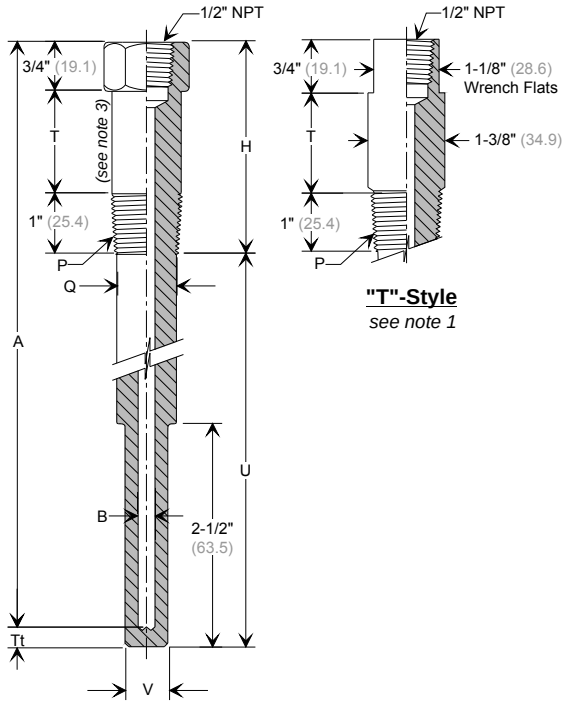

"T"-Style
see note 1

"C"-Style

C P H U Tt A T M B Q V O

P - Process Connection
12 = 1/2" NPT, *see note 3*
34 = 3/4" NPT
10 = 1" NPT
Other

H - Head Length
1.750" (44.5), *min. for 3/4" & 1" NPT*
2.000" (50.8), *min. for 1/2" NPT, see note 3*
Other

U - Insertion Length
decimal units

Tt - Tip Thickness
0.250" (6.4)
Other

A - Stem Length
decimal units

T - Lag Length
decimal units

M - Material
refer to table 2.0 on page 3-29

B - Bore Size
0.260" (6.6)
Other

Q - Root Diameter
0.625" (15.9), *for 1/2" NPT*
0.750" (19.1), *for 3/4" NPT*
1.000" (25.4), *for 1" NPT*
Other

V - Tip Diameter
0.500" (12.7)
Other

O - Options
refer to page 3-28

Sample Part No.: C34 - 4.000" - 6.000" - 0.250" - 9.750" - 2.250" - R/RL - 0.260" - 0.750" - 0.500" -DR11a, SC3

Notes

1. Use an 'T-Style' thermowell when the Stem Length 'A' is greater than 20" (508) or when using round bar. Refer to table 2.0 on page 3-29 for readily available bar types.
2. Contact a sales representative when requiring a thermowell not listed in this catalogue.
3. For 1/2" NPT process connection the hex length is 1-1/8" (28.6) and the thread length is 7/8" (22.2).
4. Metric dimensions are in brackets.

WIKA Instruments Ltd. Thermowell Catalogue, Copyright 2006

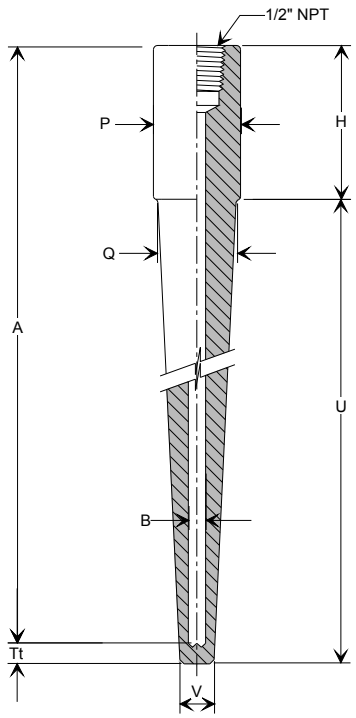

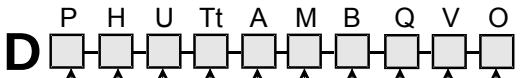

P - Process Connection
34 = 1.050" (26.7), *for 3/4" pipe*
10 = 1.315" (33.4), *for 1" pipe*
15 = 1.900" (48.3), *for 1-1/2" pipe*
Other

H - Head Length
1.750" (44.5), *min.*
Other

U - Insertion Length
decimal units

Tt - Tip Thickness
0.250" (6.4)
Other

A - Stem Length
decimal units

M - Material
refer to table 2.0 on page 3-29

B - Bore Size
0.260" (6.6)
0.385" (9.8)
Other

Q - Root Diameter
refer to table 1.0

V - Tip Diameter
refer to table 1.0

O - Options
refer to page 3-28

Table 1.0

NPS	Rating	Maximum Root Diameter (Q)	Suggested Tip Diameter (V)
3/4"	3000#	0.750" (19.1)	0.625" (15.9)
1"	3000#	1.000" (25.4)	0.750" (19.1)
1-1/2"	3000#	1.500" (38.1)	0.750" (19.1)
3/4"	6000#	See 'E'-Style	See 'E'-Style
1"	6000#	See 'E' or 'F'-Style	See 'E' or 'F'-Style
1-1/2"	6000#	1.250" (31.8)	0.750" (19.1)

Sample Part No.: D10 - 1.750" - 6.000" - 0.250" - 7.500" - R/RL - 0.260" - 0.750" - 0.625" -DR11a, SC3

Notes

1. Contact a sales representative when requiring a thermowell not listed in this catalogue.
2. Metric dimensions are in brackets.

WIKA Instruments Ltd. Thermowell Catalogue, Copyright 2006

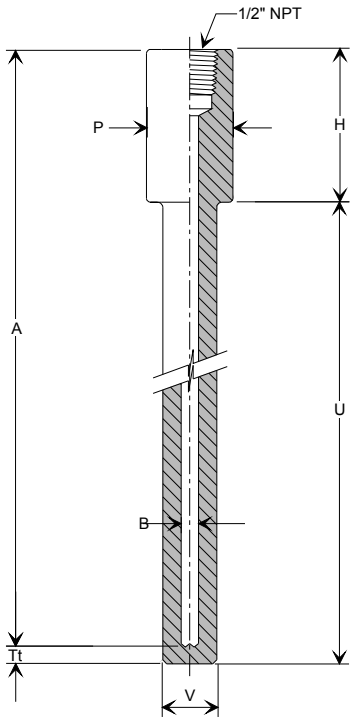

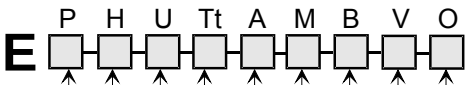

P - Process Connection
34 = 1.050" (26.7), *for 3/4" pipe*
10 = 1.315" (33.4), *for 1" pipe*
15 = 1.900" (48.3), *for 1-1/2" pipe*
Other

H - Head Length
1.750", (44.5), *min.*
Other

U - Insertion Length
decimal units

Tt - Tip Thickness
0.250", (6.4)
Other

A - Stem Length
decimal units

M - Material
refer to table 2.0 on page 3-29

B - Bore Size
0.260", (6.6)
0.385", (9.8)
Other

V - Tip Diameter
refer to table 1.1

O - Options
refer to page 3-28

Table 1.1

NPS	Rating	Maximum Tip Diameter (V)
3/4"	3000#	0.750" (19.1)
1"	3000#	1.000" (25.4)
1-1/2"	3000#	1.500" (38.1)
3/4"	6000#	0.500" (12.7)
1"	6000#	0.750" (19.1)
1-1/2"	6000#	1.250" (31.8)

Sample Part No.: E10 - 1.750" - 6.000" - 0.250" - 7.500" - R/RL - 0.260" - 0.750" - DR11a, SC3

Notes

1. Contact a sales representative when requiring a thermowell not listed in this catalogue.
2. Metric dimensions are in brackets.

WIKA Instruments Ltd. Thermowell Catalogue, Copyright 2006

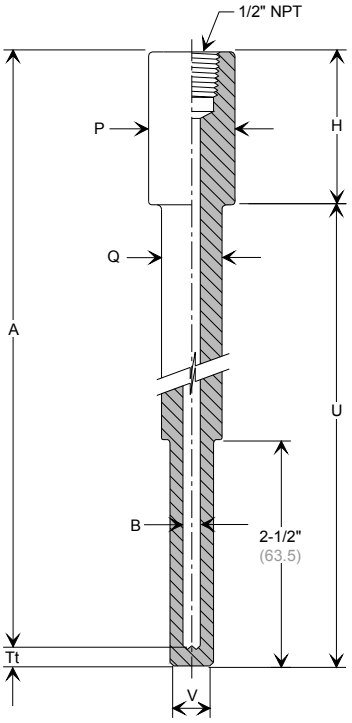

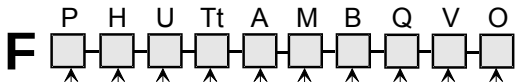

P - Process Connection
34 = 1.050" (26.7), *for 3/4" pipe*
10 = 1.315" (33.4), *for 1" pipe*
15 = 1.900" (48.3), *for 1-1/2" pipe*
Other

H - Head Length
1.750", (44.5), *min.*
Other

U - Insertion Length
decimal units

Tt - Tip Thickness
0.250", (6.4)
Other

A - Stem Length
decimal units

M - Material
refer to table 2.0 on page 3-29

B - Bore Size
0.260", (6.6)
Other

Q - Root Diameter
refer to table 1.2

V - Tip Diameter
refer to table 1.2

O - Options
refer to page 3-28

Table 1.2

NPS	Rating	Maximum Root Diameter (Q)	Suggested Tip Diameter (V)
3/4"	3000#	0.750" (19.1)	0.500" (12.7)
1"	3000#	1.000" (25.4)	0.500" (12.7)
1-1/2"	3000#	1.500" (38.1)	0.500" (12.7)
3/4"	6000#	See 'E'-Style	See 'E'-Style
1"	6000#	0.750" (19.1)	0.500" (12.7)
1-1/2"	6000#	1.250" (31.8)	0.500" (12.7)

Sample Part No.: F10 - 1.750" - 6.000" - 0.250" - 7.500" - R/RL - 0.260" - 0.750"- 0.500" -DR11a, SC3

Notes

1. Contact a sales representative when requiring a thermowell not listed in this catalogue.
2. Metric dimensions are in brackets.

WIKA Instruments Ltd. Thermowell Catalogue, Copyright 2006

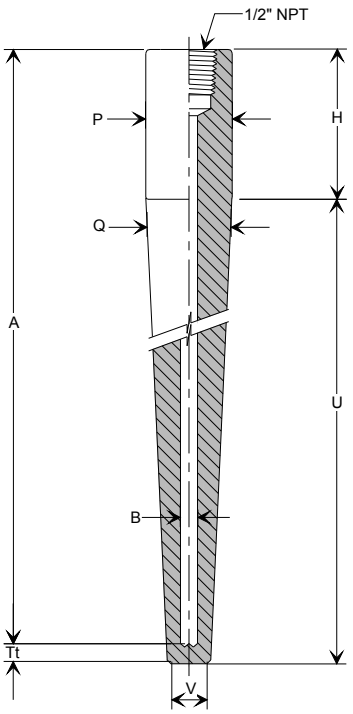

G P H U Tt A M B Q V O

P - Process Connection
Hole size, *min. 1.000"*(25.4)*dia.*
decimal units

H - Head Length
1.750", (44.5), *min.*
Other

U - Insertion Length
decimal units

Tt - Tip Thickness
0.250", (6.4)
Other

A - Stem Length
decimal units

M - Material
refer to table 2.0 on page 3-29

B - Bore Size
0.260", (6.6)
0.385", (9.8)
Other

Q - Root Diameter
must be less than or equal to 'P'
decimal units

V - Tip Diameter
0.750", (19.1)
Other

O - Options
refer to page 3-28

Sample Part No.: G1.000" - 1.750" - 6.000" - 0.250" - 7.500" - R/RL - 0.260" - 0.875" - 0.750" -DR11a, SC3

Notes

1. Contact a sales representative when requiring a thermowell not listed in this catalogue.
2. Metric dimensions are in brackets.

WIKA Instruments Ltd. Thermowell Catalogue, Copyright 2006

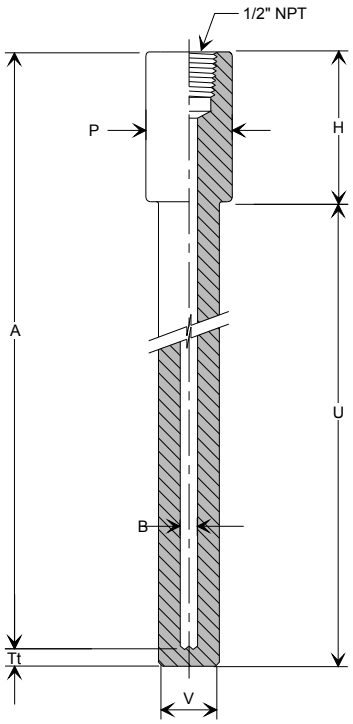

H P H U Tt A M B V O

P - Process Connection
Hole size, *min. 1.000"*(25.4)*dia.*
decimal units

H - Head Length
1.750", (44.5), *min.*
Other

U - Insertion Length
decimal units

Tt - Tip Thickness
0.250", (6.4)
Other

A - Stem Length
decimal units

M - Material
refer to table 2.0 on page 3-29

B - Bore Size
0.260", (6.6)
0.385", (9.8)
Other

V - Tip Diameter
must be less than or equal to 'P'
decimal units

O - Options
refer to page 3-28

Sample Part No.: H1.000" - 1.750" - 6.000" - 0.250" - 7.500" - R/RL - 0.260" - 0.750" - DR11a, SC3

Notes

1. Contact a sales representative when requiring a thermowell not listed in this catalogue.
2. Metric dimensions are in brackets.

WIKA Instruments Ltd. Thermowell Catalogue, Copyright 2006

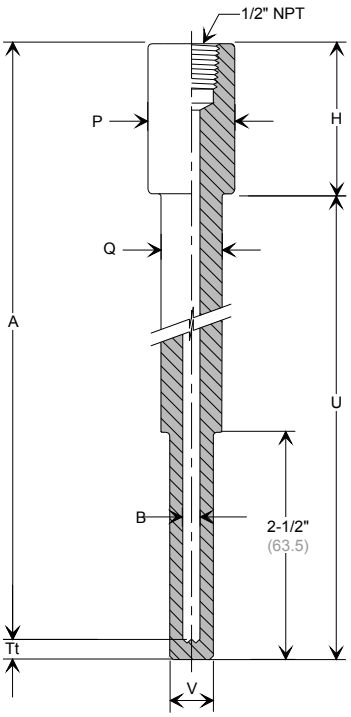

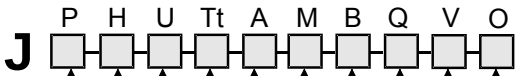

P - Process Connection
Hole size, *min. 1.000"*(25.4)*dia.*
decimal units

H - Head Length
1.750", (44.5), *min.*
Other

U - Insertion Length
decimal units

Tt - Tip Thickness
0.250", (6.4)
Other

A - Stem Length
decimal units

M - Material
refer to table 2.0 on page 3-29

B - Bore Size
0.260", (6.6)
Other

Q - Root Diameter
must be less than or equal to 'P'
decimal units

V - Tip Diameter
0.500", (12.7)
Other

O - Options
refer to page 3-28

Sample Part No.: J1.000" - 1.750" - 6.000" - 0.250" - 7.500" - R/RL - 0.260" - 0.750" - 0.500" -DR11a, SC3

Notes

1. Contact a sales representative when requiring a thermowell not listed in this catalogue.
2. Metric dimensions are in brackets.

WIKA Instruments Ltd. Thermowell Catalogue, Copyright 2006

Quick Order Thermowells
Styles K, L and M

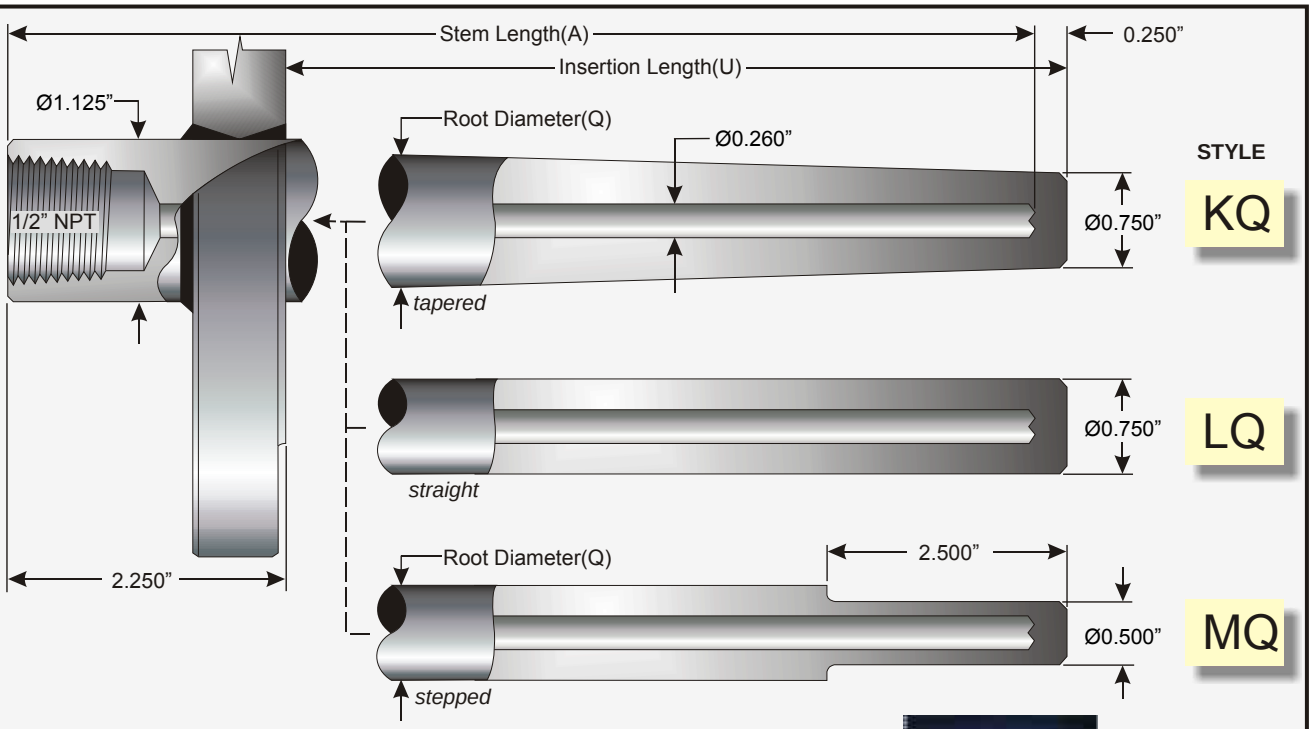

Note:
The thermowell styles on this page have the following default fixed values of:
Flange Face (Fc).....Raised Face
Welding.....Full Penetration
Nozzle Size (Ps).....Schedule 80.
Root Diameter (Q).....1.063” diameter, *style KQ*
0.750” diameter, *style MQ*

Please refer to the WIKA Instruments “Thermowell Catalogue” for customized solutions to the above values.

reference material



WIKA Instruments
Thermowell Catalogue

Ordering Code

□ - □ - □ - □ - □ - □ - □ - Options

Style
KQ
LQ
MQ

Flange Size (Fs)
15 = 1 1/2”
20 = 2”

Pressure Rating (Pr)
150 = 150#
300 = 300#

Flange Material Code (Fm)
R/RL=316/316L SS
P/PL=304/304L SS

Insertion Length(U)
in decimal inches

Stem Length(A)
in decimal inches
Max. 20”

Bar Material Code (Bm)
R/RL=316/316L SS
P/PL=304/304L SS

Options
refer to page 3-28 of the “Thermowell Catalogue”

Sample Order Code: KQ-15-150-R/RL-6.000-8.000-R/RL - *options*

WIKA Instruments Ltd. Thermowell Catalogue, Copyright 2006

K-Style Flanged Tapered Thermowells

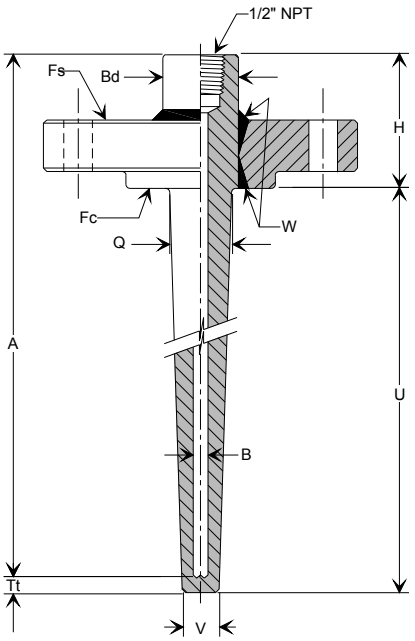

K Fs Pr Fc Fm W Bd Ps H U Tt A Bm B Q V O

Fs - Flange Size
refer to table 1.3 on page 3-13

Pr - Flange Class
150#, 300#, 400#, 600#, 900#, 1500# and 2500#

Fc - Flange Face
RF = Raised Face
FF = Flat Face
RTJ = Ring Type Joint

Fm - Flange Material
refer to table 2.0 on page 3-29

W - Welding
FP = Full Penetration Weld, *refer to figure 1.0 on page 3-13*
PP = Partial Penetration Weld, *refer to figure 1.1 on page 3-13*

Bd - Bar Diameter
1.125", (28.6)
1.375", (34.9), *see note 1 on page 3-13*
Other

Ps - Mating Nozzle Pipe Schedule
Schedule 40, 80, 160, XXH, *refer to table 2.2 on page 3-33*

H - Head Length
refer to table 1.4 on page 3-13

U - Insertion Length
decimal units

Tt - Tip Thickness
0.250", (6.4)
Other

A - Stem Length
decimal units , *see note 1 on page 3-13*

Bm - Bar Material
refer to table 2.0 on page 3-29

B - Bore Size
0.260", (6.6)
0.385", (9.8)
Other

Q - Root Diameter
1.063", (27.0), *refer to table 1.5 on page 3-13 for maximum root diameters based on flange size & pipe schedule*
Other, *refer to table 1.5 on page 3-13 for maximum root diameters based on flange size & pipe schedule*

V - Tip Diameter
0.625", (15.9)
0.750", (19.1)
Other

O - Options
refer to page 3-28

WIKA Instruments Ltd. Thermowell Catalogue, Copyright 2006

Table 1.3 Flange Sizes	
Abbreviation	Flange Size
10	1"
15	1-1/2"
20	2"
25	2-1/2"
30	3"
40	4"

Table 1.4 Minimum Head Lengths						
Flange Rating	Flange Size					
	1"	1-1/2"	2"	2-1/2"	3"	4"
150#	2.25" (57.2)	2.25" (57.2)	2.25" (57.2)	2.25" (57.2)	2.25" (57.2)	2.25" (57.2)
300#	2.25" (57.2)	2.25" (57.2)	2.25" (57.2)	2.25" (57.2)	3.25" (82.6)	3.25" (82.6)
400#	2.25" (57.2)	2.25" (57.2)	3.25" (82.6)	3.25" (82.6)	3.25" (82.6)	3.25" (82.6)
600#	2.25" (57.2)	2.25" (57.2)	3.25" (82.6)	3.25" (82.6)	3.25" (82.6)	3.25" (82.6)
900#	3.25" (82.6)	3.25" (82.6)	3.25" (82.6)	3.25" (82.6)	3.25" (82.6)	3.25" (82.6)
1500#	3.25" (82.6)	3.25" (82.6)	3.25" (82.6)	3.25" (82.6)	3.25" (82.6)	3.25" (82.6)
2500#	3.25" (82.6)	3.25" (82.6)	4.25" (108.0)	4.25" (108.0)	4.25" (108.0)	4.25" (108.0)

Table 1.5 Suggested Maximum Root Diameters					
Flange Size	Pipe Size				Standard Root Radius (rr)
	Schedule 40	Schedule 80	Schedule 160	XXH	
1"	1.000" (25.40)	0.875" (22.23)	0.750" (19.05)	0.500" (12.70)	1/32" (0.79)
1-1/2"	1.298" (32.97)	1.188" (30.18)	1.026" (26.06)	0.788" (20.02)	5/32" (3.97)
2"	1.755" (44.58)	1.627" (41.33)	1.377" (34.98)	1.191" (30.25)	5/32" (3.97)

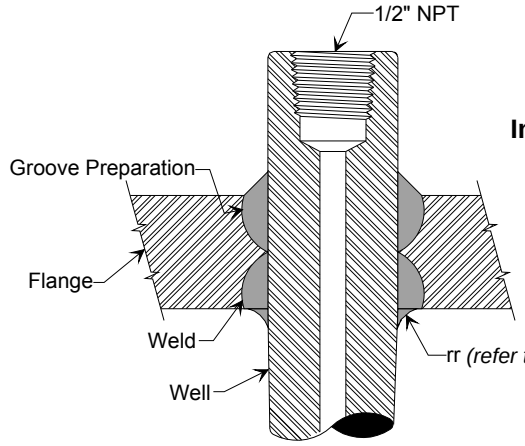

Figure 1.0
Full Penetration Weld
(standard)

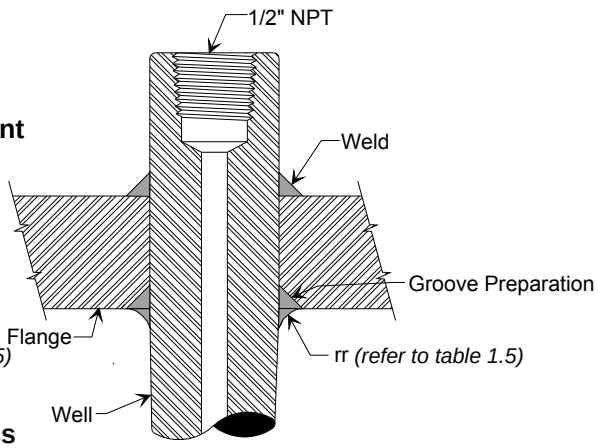

Figure 1.1
Partial Penetration Weld

Instrument Side

Process Side

Sample Part No.: K20 - 300# - RF - R/RL - FP - 1.125" - 40 - 2.250" - 6.000" - 0.250" - 8.000" - R/RL - 0.260" - 1.063" - 0.750" - DR11a, SC3

Notes

1. When the Stem Length 'A' is greater than 20" (508) the minimum bar diameter 'Bd' is 1.375" (34.9).
2. Contact a sales representative when requiring a thermowell not listed in this catalogue.
3. Metric dimensions are in brackets.

WIKA Instruments Ltd. Thermowell Catalogue, Copyright 2006

L-Style Flanged Straight Thermowells

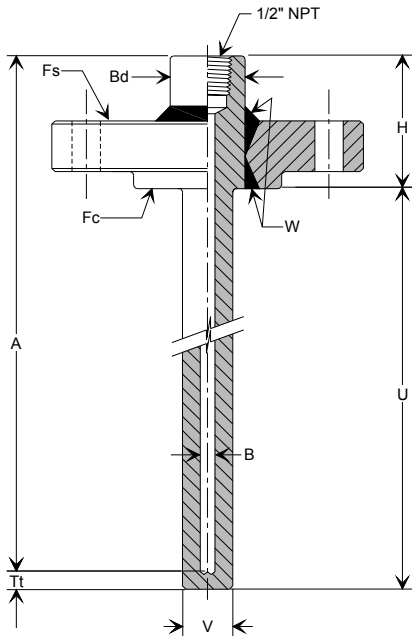

L Fs Pr Fc Fm W Bd Ps H U Tt A Bm B V O

Fs - Flange Size
refer to table 1.6 on page 3-15

Pr - Flange Rating
150#, 300#, 400#, 600#, 900#, 1500# and 2500#

Fc - Flange Face
RF = Raised Face
FF = Flat Face
RTJ = Ring Type Joint

Fm- Flange Material
refer to table 2.0 on page 3-29

W - Welding
FP = Full Penetration Weld, *refer to figure 1.2 on page 3-15*
PP = Partial Penetration Weld, *refer to figure 1.3 on page 3-15*

Bd- Bar Diameter
1.125", (28.6)
1.375", (34.9), *see note 1 on page 3-15*
Other

Ps- Schedule Pipe Size
Schedule 40, 80, 160, XXH , *refer to table 2.2 on page 3-33*

H - Head Length
refer to table 1.7 on page 3-15

U - Insertion Length
decimal units

Tt - Tip Thickness
0.250", (6.4)
Other

A - Stem Length
decimal units , *see note 1 on page 3-15*

Bm- Bar Material
refer to table 2.0 on page 3-29

B - Bore Size
0.260", (6.6)
0.385", (9.8)
0.512", (13.0)
0.702", (17.8)
Other

V - Tip Diameter
0.625", (15.9), *refer to table 1.8 on page 3-15 for maximum root diameters based on flange size & pipe schedule*
0.750", (19.1), *refer to table 1.8 on page 3-15 for maximum root diameters based on flange size & pipe schedule*
1.000", (25.4), *refer to table 1.8 on page 3-15 for maximum root diameters based on flange size & pipe schedule*
Other, *refer to table 1.8 on page 3-15 for maximum root diameters based on flange size & pipe schedule*

O - Options
refer to page 3-28

WIKA Instruments Ltd. Thermowell Catalogue, Copyright 2006

Table 1.6 Flange Sizes	
Abbreviation	**Flange Size**
10	1"
15	1-1/2"
20	2"
25	2-1/2"
30	3"
40	4"

Table 1.7 Minimum Head Lengths

Flange Rating	Flange Size					
	1"	1-1/2"	2"	2-1/2"	3"	4"
150#	2.25" (57.2)	2.25" (57.2)	2.25" (57.2)	2.25" (57.2)	2.25" (57.2)	2.25" (57.2)
300#	2.25" (57.2)	2.25" (57.2)	2.25" (57.2)	2.25" (57.2)	3.25" (82.6)	3.25" (82.6)
400#	2.25" (57.2)	2.25" (57.2)	3.25" (82.6)	3.25" (82.6)	3.25" (82.6)	3.25" (82.6)
600#	2.25" (57.2)	2.25" (57.2)	3.25" (82.6)	3.25" (82.6)	3.25" (82.6)	3.25" (82.6)
900#	3.25" (82.6)	3.25" (82.6)	3.25" (82.6)	3.25" (82.6)	3.25" (82.6)	3.25" (82.6)
1500#	3.25" (82.6)	3.25" (82.6)	3.25" (82.6)	3.25" (82.6)	3.25" (82.6)	3.25" (82.6)
2500#	3.25" (82.6)	3.25" (82.6)	4.25" (108.0)	4.25" (108.0)	4.25" (108.0)	4.25" (108.0)

Table 1.8 Suggested Maximum Root Diameters

Flange Size	Pipe Size				Standard Root Radius (rr)
	Schedule 40	Schedule 80	Schedule 160	XXH	
1"	1.000" (25.40)	0.875" (22.23)	0.750" (19.05)	0.500" (12.70)	1/32" (0.79)
1-1/2"	1.298" (32.97)	1.188" (30.18)	1.026" (26.06)	0.788" (20.02)	5/32" (3.97)
2"	1.755" (44.58)	1.627" (41.33)	1.377" (34.98)	1.191" (30.25)	5/32" (3.97)

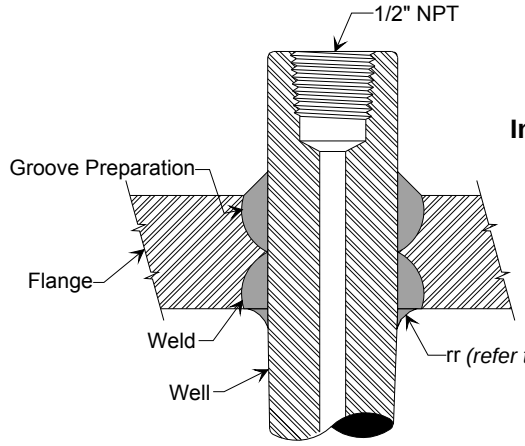

Figure 1.2
Full Penetration Weld
(standard)

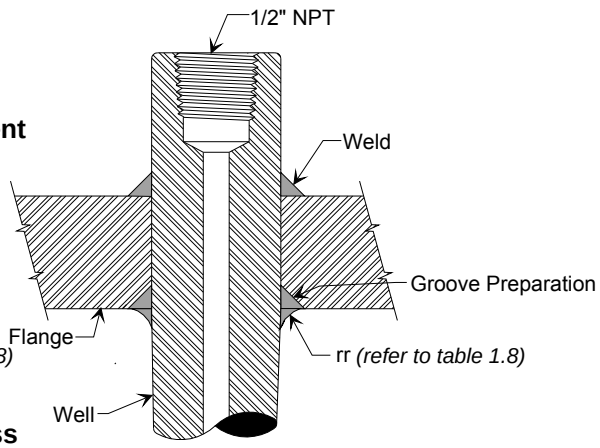

Figure 1.3
Partial Penetration Weld

Instrument Side

Process Side

Sample Part No.: L20 - 300# - RF - R/RL - FP - 1.125" - 40 - 2.250" - 6.000" - 0.250" - 8.000" - R/RL - 0.260" - 1.063" - 0.750" - DR11a, SC3

Notes

1. When the Stem Length 'A' is greater than 20" (508) the minimum bar diameter 'Bd' is 1.375" (34.9).
2. Contact a sales representative when requiring a thermowell not listed in this catalogue.
3. Metric dimensions are in brackets.

WIKA Instruments Ltd. Thermowell Catalogue, Copyright 2006

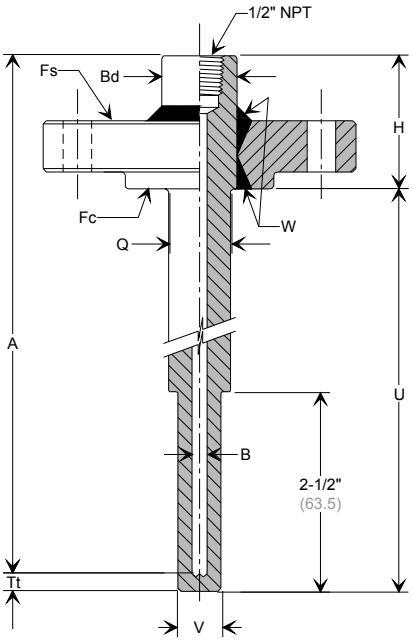

M Fs Pr Fc Fm W Bd Ps H U Tt A Bm B Q V O

Fs - Flange Size
refer to table 1.9 on page 3-17

Pr - Flange Rating
150#, 300#, 400#, 600#, 900#, 1500# and 2500#

Fc - Flange Face
RF = Raised Face
FF = Flat Face
RTJ = Ring Type Joint

Fm - Flange Material
refer to table 2.0 on page 3-29

W - Welding
FP = Full Penetration Weld, *refer to figure 1.4 on page 3-17*
PP = Partial Penetration Weld, *refer to figure 1.5 on page 3-17*

Bd - Bar Diameter
1.125", (28.6)
1.375", (34.9), *see note 1 on page 3-17*
Other

Ps - Schedule Pipe Size
Schedule 40, 80, 160, XXH , *refer to table 2.2 on page 3-33*

H - Head Length
refer to table 1.10 on page 3-17

U - Insertion Length
decimal units

Tt - Tip Thickness
0.250", (6.4)
Other

A - Stem Length
decimal units , *see note 1 on page 3-17*

Bm - Bar Material
refer to table 2.0 on page 3-29

B - Bore Size
0.260", (6.6)
Other

Q - Root Diameter
0.750", (19.1), *refer to table 1.11 on page 3-17 for maximum root diameters based on flange size & pipe schedule*
Other, *refer to table 1.11 on page 3-17 for maximum root diameters based on flange size & pipe schedule*

V - Tip Diameter
0.500", (12.7)
Other

O - Options
refer to page 3-28

WIKA Instruments Ltd. Thermowell Catalogue, Copyright 2006

Table 1.9 Flange Sizes	
Abbreviation	Flange Size
10	1"
15	1-1/2"
20	2"
25	2-1/2"
30	3"
40	4"

Table 1.10 Minimum Head Lengths						
Flange Rating	Flange Size					
	1"	1-1/2"	2"	2-1/2"	3"	4"
150#	2.25" (57.2)	2.25" (57.2)	2.25" (57.2)	2.25" (57.2)	2.25" (57.2)	2.25" (57.2)
300#	2.25" (57.2)	2.25" (57.2)	2.25" (57.2)	2.25" (57.2)	3.25" (82.6)	3.25" (82.6)
400#	2.25" (57.2)	2.25" (57.2)	3.25" (82.6)	3.25" (82.6)	3.25" (82.6)	3.25" (82.6)
600#	2.25" (57.2)	2.25" (57.2)	3.25" (82.6)	3.25" (82.6)	3.25" (82.6)	3.25" (82.6)
900#	3.25" (82.6)	3.25" (82.6)	3.25" (82.6)	3.25" (82.6)	3.25" (82.6)	3.25" (82.6)
1500#	3.25" (82.6)	3.25" (82.6)	3.25" (82.6)	3.25" (82.6)	3.25" (82.6)	3.25" (82.6)
2500#	3.25" (82.6)	3.25" (82.6)	4.25" (108.0)	4.25" (108.0)	4.25" (108.0)	4.25" (108.0)

Table 1.11 Suggested Maximum Root Diameters					
Flange Size	Pipe Size				Standard Root Radius (rr)
	Schedule 40	Schedule 80	Schedule 160	XXH	
1"	1.000" (25.40)	0.875" (22.23)	0.750" (19.05)	0.500" (12.70)	1/32" (0.79)
1-1/2"	1.298" (32.97)	1.188" (30.18)	1.026" (26.06)	0.788" (20.02)	5/32" (3.97)
2"	1.755" (44.58)	1.627" (41.33)	1.377" (34.98)	1.191" (30.25)	5/32" (3.97)

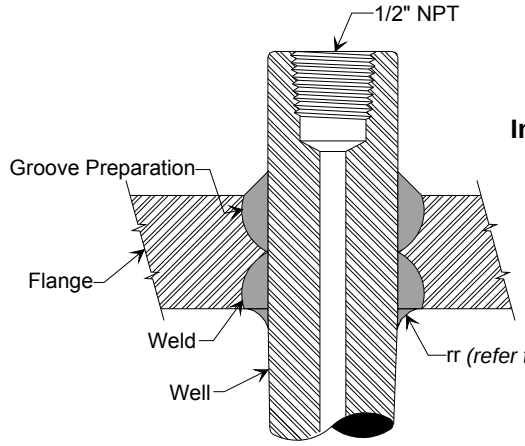

Figure 1.4
Full Penetration Weld
(standard)

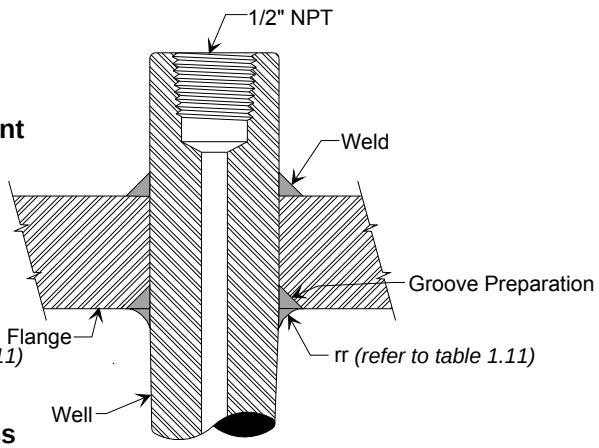

Figure 1.5
Partial Penetration Weld

Instrument Side

Process Side

Sample Part No.: M20 - 300# - RF - R/RL - FP - 1.125" - 40 - 2.250" - 6.000" - 0.250" - 8.000" - R/RL - 0.260" - 1.063" - 0.750" - DR11a, SC3

Notes

1. When the Stem Length 'A' is greater than 20" (508) the minimum bar diameter 'Bd' is 1.375" (34.9).
2. Contact a sales representative when requiring a thermowell not listed in this catalogue.
3. Metric dimensions are in brackets.

WIKA Instruments Ltd. Thermowell Catalogue, Copyright 2006

N-Style Vanstone Tapered Thermowells

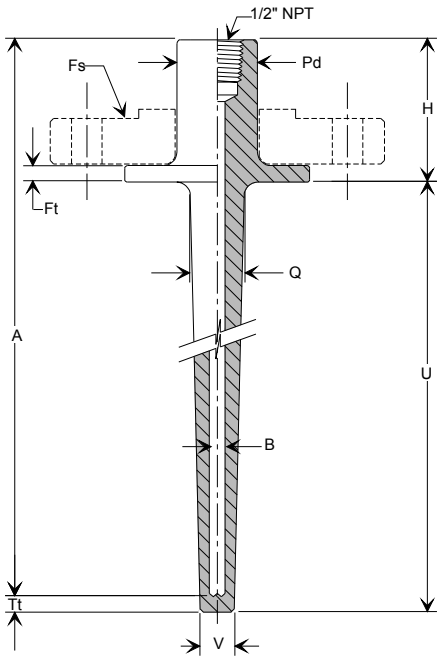

N Fs Pr Ft H Pd U Tt A M B Q V O

Fs- Flange Size
1", 1-1/2", and 2", *refer to table 1.3 on page 3-13*
Other

Pr- Flange Rating
150#, 300#, 400#, 600#, 900#,1500# and 2500#

Ft- Flange Thickness
0.375" (9.5)
Other

H - Head Length
2.250" (57.2)
3.250" (82.6)
Other

Pd- Pipe Diameter
1.315" (33.4), *for 1" flange size*
1.900" (48.3), *for 1-1/2" flange size*
2.375" (60.3), *for 2" flange size*
Other

U - Insertion Length
decimal units

Tt - Tip Thickness
0.250" (6.4)
Other

A - Stem Length
decimal units

M - Material
refer to table 2.0 on page 3-29

B - Bore Size
0.260 (6.6)
0.385 (9.8)
Other

Q - Root Diameter
1.063" (27.0), *refer to table 1.5 on page 3-13 for maximum root diameters based on flange size & pipe schedule*
Other, *refer to table 1.5 on page 3-13 for maximum root diameters based on flange size & pipe schedule*

V - Tip Diameter
0.625, (15.9)
0.750", (19.1)
Other

O - Options
refer to page 3-28

Sample Part No.: N15 - 150# - 0.375" - 3.250" - 2.375" - 6.000" - 0.250" - 9.000" - R/RL - 0.260" - 1.063" - 0.750" - DR11a, SC3

Notes

1. Most Vanstone thermowells are fabricated from one piece bar stock.
   A two piece construction could be considered for economic reasons.
2. Contact a sales representative when requiring a thermowell not listed in this catalogue.
3. Metric dimensions are in brackets.

WIKA Instruments Ltd. Thermowell Catalogue, Copyright 2006

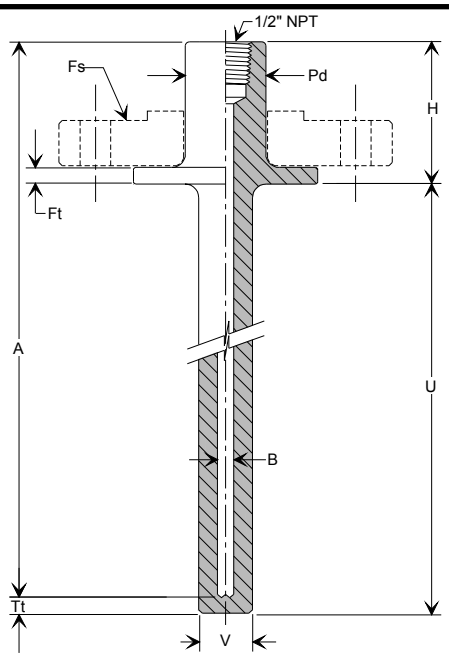

P Fs Pr Ft H Pd U Tt A M B V O

Fs- Flange Size
1", 1-1/2", and 2", *refer to table 1.6 on page 3-15*
Other

Pr- Flange Rating
150#, 300#, 400#, 600#, 900#,1500# and 2500#

Ft- Flange Thickness
0.375" (9.5)
Other

H - Head Length
2.250" (57.2)
3.250" (82.6)
Other

Pd- Pipe Diameter
1.315" (33.4), *for 1" flange size*
1.900" (48.3), *for 1-1/2" flange size*
2.375" (60.3), *for 2" flange size*
Other

U - Insertion Length
decimal units

Tt - Tip Thickness
0.250" (6.4)
Other

A - Stem Length
decimal units

M - Material
refer to table 2.0 on page 3-29

B - Bore Size
0.260 (6.6)
0.385 (9.8)
0.512" (13.0)
Other

V - Tip Diameter
0.625, (15.9), *refer to table 1.8 on page 3-15 for maximum root diameters based on flange size & pipe schedule*
0.750", (19.1), *refer to table 1.8 on page 3-15 for maximum root diameters based on flange size & pipe schedule*
Other, *refer to table 1.8 on page 3-15 for maximum root diameters based on flange size & pipe schedule*

O - Options
refer to page 3-28

Sample Part No.: P15 - 150# - 0.375" - 3.250" - 2.375" - 6.000" - 0.250" - 9.000" - R/RL - 0.260" - 0.750" - DR11a, SC3

Notes

1. Most Vanstone thermowells are fabricated from one piece bar stock.
   A two piece construction could be considered for economic reasons.
2. Contact a sales representative when requiring a thermowell not listed in this catalogue.
3. Metric dimensions are in brackets.

WIKA Instruments Ltd. Thermowell Catalogue, Copyright 2006

Q-Style Vanstone Stepped Thermowells

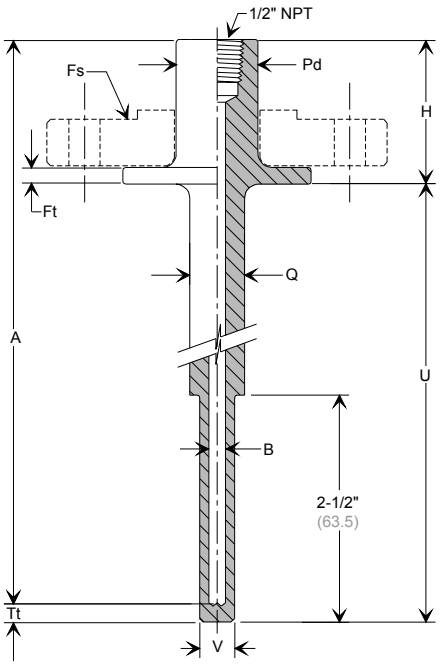

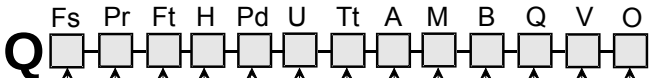

Fs- Flange Size
1", 1-1/2", and 2", *refer to table 1.9 on page 3-17*
Other

Pr- Flange Rating
150#, 300#, 400#, 600#, 900#,1500# and 2500#

Ft- Flange Thickness
0.375" (9.5)
Other

H - Head Length
2.250"(57.2)
3.250"(82.6)
Other

Pd- Pipe Diameter
1.315" (33.4), *for 1" flange size*
1.900" (48.3), *for 1-1/2" flange size*
2.375" (60.3), *for 2" flange size*
Other

U - Insertion Length
decimal units

Tt - Tip Thickness
0.250" (6.4)
Other

A - Stem Length
decimal units

M - Material
refer to table 2.0 on page 3-29

B - Bore Size
0.260 (6.6)
Other

Q - Root Diameter
0.750" (19.1), *refer to table 1.11 on page 3-17 for maximum root diameters based on flange size & pipe schedule*
Other, *refer to table 1.11 on page 3-17 for maximum root diameters based on flange size & pipe schedule*

V - Tip Diameter
0.500", (12.7)
Other

O - Options
refer to page 3-28

Sample Part No.: Q15 - 150# - 0.375" - 3.250" - 2.375" - 6.000" - 0.250" - 9.000" - R/RL - 0.260" - 0.750" - 0.500" - DR11a, SC3

Notes

1. Most Vanstone thermowells are fabricated from one piece bar stock.
   A two piece construction could be considered for economic reasons.
2. Contact a sales representative when requiring a thermowell not listed in this catalogue.
3. Metric dimensions are in brackets.

WIKA Instruments Ltd. Thermowell Catalogue, Copyright 2006

R-Style Wrench Flat Tapered Thermowells

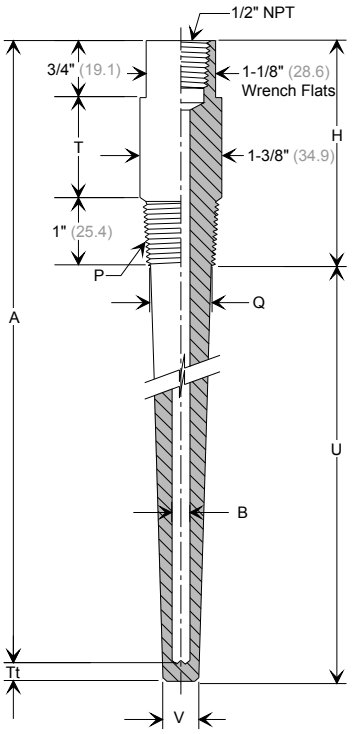

R P H U Tt A T M B Q V O

P - Process Connection
34 = 3/4" NPT
10 = 1" NPT
Other

H - Head Length
1.750" (44.5), *min.*
Other

U - Insertion Length
decimal units

Tt - Tip Thickness
0.250", (6.4)
Other

A - Stem Length
decimal units

T - Lag Length
decimal units

M - Material
refer to table 2.0 on page 3-29

B - Bore Size
0.260" (6.6)
0.385" (9.8)
Other

Q - Root Diameter
0.875" (22.2), *for 3/4" NPT*
1.063" (27.0), *for 1" NPT*
Other

V - Tip Diameter
0.625" (15.9)
0.750" (19.1)
Other

O - Options
refer to page 3-28

Sample Part No.: R34 - 4.000" - 6.000" - 0.250" - 9.750" - 2.250" - R/RL - 0.260" - 0.875" - 0.750" - DR11a, SC3

Notes

1. Contact a sales representative when requiring a thermowell not listed in this catalogue.
2. Metric dimensions are in brackets.

WIKA Instruments Ltd. Thermowell Catalogue, Copyright 2006

S-Style Wrench Flat Straight Thermowells

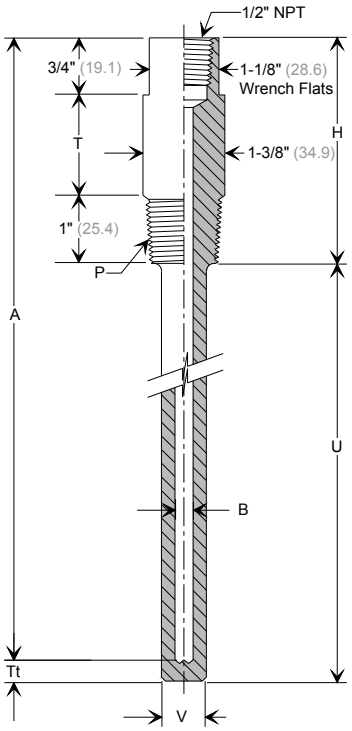

S P H U Tt A T M B V O

P - Process Connection
12 = 1/2" NPT, *see note 2*
34 = 3/4" NPT
10 = 1" NPT
Other

H - Head Length
1.750" (44.5), *for 3/4" & 1" NPT*
2.000" (50.8), *for 1/2" NPT, see note 2*
Other

U - Insertion Length
decimal units

Tt - Tip Thickness
0.250" (6.4)
Other

A - Stem Length
decimal units

T - Lag Length
decimal units

M - Material
refer to table 2.0 on page 3-29

B - Bore Size
0.260" (6.6)
0.385" (9.8)
0.512" (13.0)
0.702" (17.8)
Other

V - Tip Diameter
0.625" (15.9), *for 1/2" NPT*
0.750" (19.1), *for 3/4" NPT*
0.875" (22.2), *for 1" NPT*
Other

O - Options
refer to page 3-28

Sample Part No.: S34 - 4.000" - 6.000" - 0.250" - 9.750" - 2.250" - R/RL - 0.260" - 0.750" - DR11a, SC3

Notes

1. Contact a sales representative when requiring a thermowell not listed in this catalogue.
2. For 1/2" NPT process connection the thread length is 7/8" (22.2) and the overall head length 'H' is 2" (50.8).
3. Metric dimensions are in brackets.

WIKA Instruments Ltd. Thermowell Catalogue, Copyright 2006

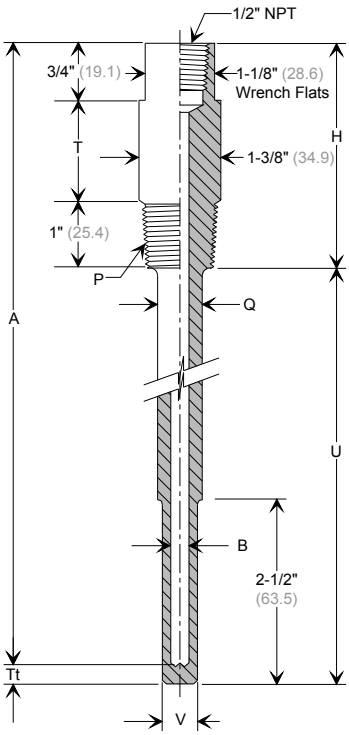

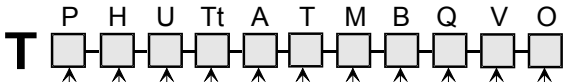

P - Process Connection
12 = 1/2" NPT, *see note 2*
34 = 3/4" NPT
10 = 1" NPT
Other

H - Head Length
1.750" (44.5), *min. for 3/4" & 1" NPT*
2.000" (50.8), *min. for 1/2" NPT, see note 2*
Other

U - Insertion Length
decimal units

Tt - Tip Thickness
0.250" (6.4)
Other

A - Stem Length
decimal units

T - Lag Length
decimal units

M - Material
refer to table 2.0 on page 3-29

B - Bore Size
0.260" (6.6)
Other

Q - Root Diameter
0.625" (15.9), *for 1/2" NPT*
0.750" (19.1), *for 3/4" NPT*
1.000" (25.4), *for 1" NPT*
Other

V - Tip Diameter
0.500" (12.7)
Other

O - Options
refer to page 3-28

Sample Part No.: T34 - 4.000" - 6.000" - 0.250" - 9.750" - 2.250" - R/RL - 0.260" - 0.875" - 0.500" - DR11a, SC3

Notes

1. Contact a sales representative when requiring a thermowell not listed in this catalogue.
2. For 1/2" NPT process connection the thread length is 7/8" (22.2) and the overall head length 'H' is 2" (50.8).
3. Metric dimensions are in brackets.

WIKA Instruments Ltd. Thermowell Catalogue, Copyright 2006

SC4T - Style Hygienic (Sanitary) Tapered Thermowell

SC4T Um - Fs - Ft - B - U - A - M - Q - V

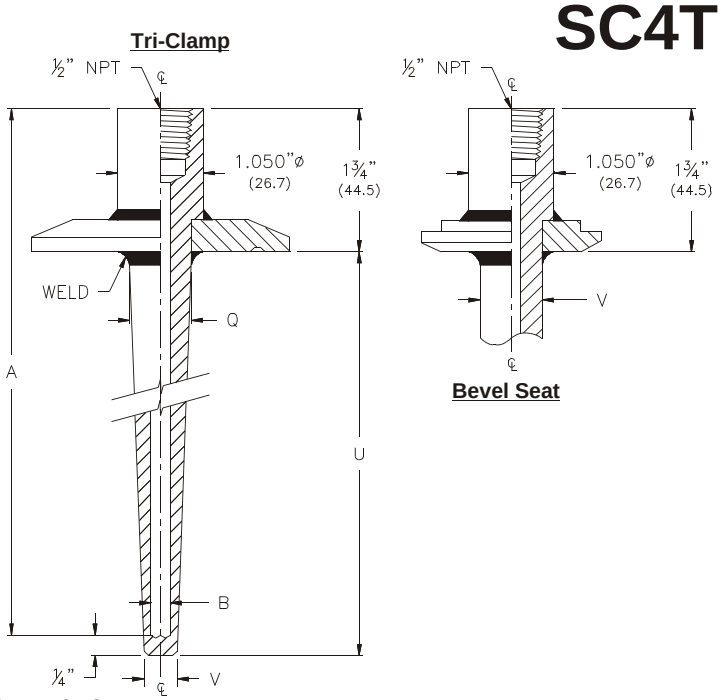

Um - Unit of Measure
I = Imperial (inches)
M = Metric (millimeters)

Fs - Flange Size
10 = 1" Flange
15 = 1 ½" Flange
20 = 2" Flange
25 = 2 ½" Flange
30 = 3" Flange

Ft - Flange Type
TC = Tri-Clamp
BS = Bevel Seat
1 = Other (specify) Consult Factory

B - Bore Size (Max 0.260")
1 = 0.260" (6.6)
2 = Other (Specify) Consult Factory

U - Insertion Length (Decimal inches)/(Millimeters)

A - Stem Length (Decimal inches)/(Millimeters)

M - Material
P/PL = 304 SS
R/RL = 316 SS
1 = Other (Specify) Consult Factory
Refer to table 2.0 on page 3-29 in Thermowell section for other materials

Q - Root Diameter
1 = 3/4" (19.1)
2 = Other (Specify) Consult Factory

V - Tip Diameter
1 = 1/2" (12.7)
2 = 5/8" (15.9)
3 = Other (Specify) Consult Factory

Sample Part No.: SC4T-I-15-TC-1-6.00-7.5-R/RL-1-1

Notes

1. Sanitary thermowells: Meet **USDA** and **3A** sanitary standard 74-01.
   Standard Finish 16-22Ra.
2. Metric dimensions are in brackets

WIKA Instruments Ltd. Thermowell Catalogue, Copyright 2006

SC3S - Style Hygienic (Sanitary) Straight Thermowell

SC3S Um - Fs - Ft - B - U - A - M - V

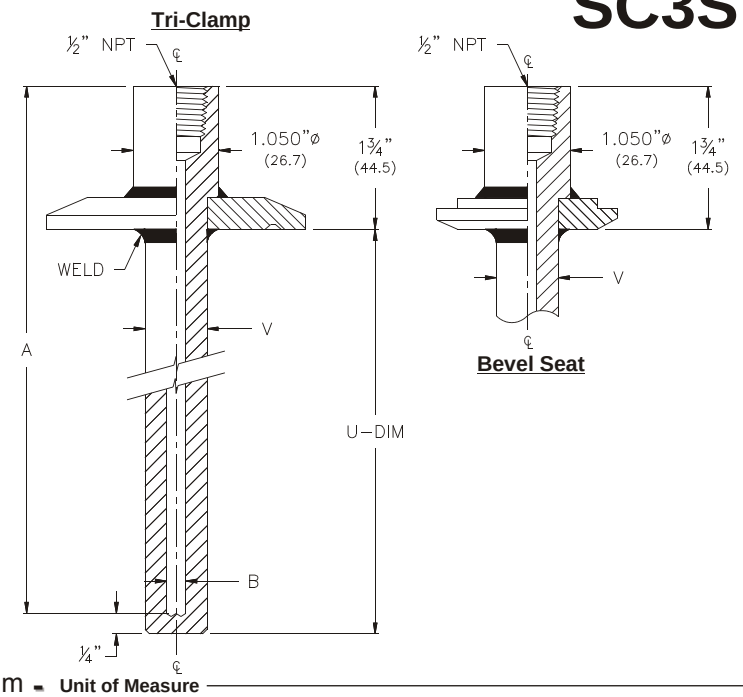

Um - **Unit of Measure**
I = Imperial (inches)
M = Metric (millimeters)

Fs - **Flange Size**
10 = 1" Flange
15 = 1 ½" Flange
20 = 2" Flange
25 = 2 ½" Flange
30 = 3" Flange

Ft - **Flange Type**
TC = Tri-Clamp
BS = Bevel Seat
1 = Other (specify) Consult Factory

B - **Bore Size** (Max 0.260")
1 = 0.260" (6.6)
2 = Other (Specify) Consult Factory

U - **Insertion Length** (Decimal inches)/(Millimeters)

A - **Stem Length** (Decimal inches)/(Millimeters)

M - **Material**
P/PL = 304 SS
R/RL = 316 SS
1 = Other (Specify) Consult Factory
Refer to table 2.0 on page 3-29 in Thermowell section for other materials

V - **Tip Diameter**
1 = 1/2" (12.7)
2 = 5/8" (15.9)
3 = Other (Specify) Consult Factory

Sample Part No.: SC3S-I-15-TC-1-6.00-7.5-R/RL-1

Notes

1. Sanitary thermowells: Meet **USDA** and **3A** sanitary standard 74-01.
   Standard Finish 16-22Ra.
2. Metric dimensions are in brackets

WIKA Instruments Ltd. Thermowell Catalogue, Copyright 2006

SC2R - Style Hygienic (Sanitary) Stepped Thermowell

SC2R Um - Fs - Ft - B - U - A - M - Q - V

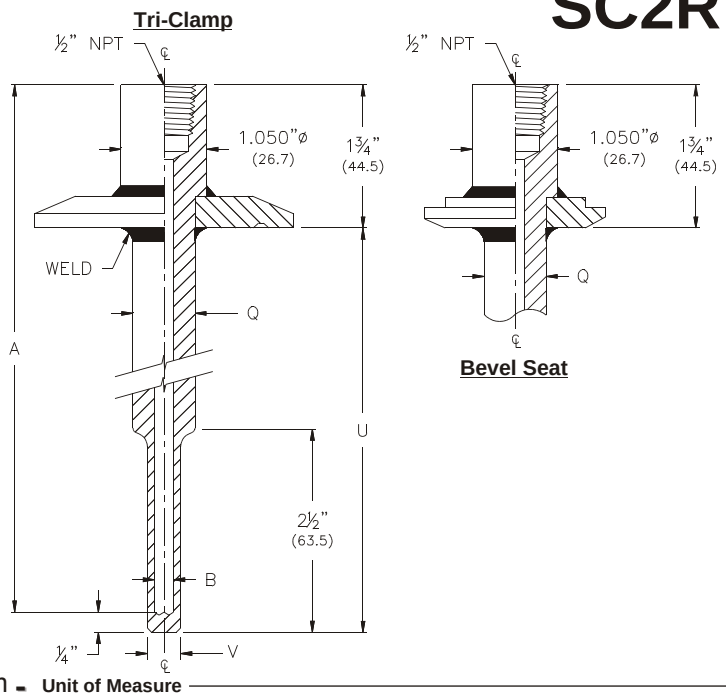

Um - **Unit of Measure**
I = Imperial (inches)
M = Metric (millimeters)

Fs - **Flange Size**
10 = 1" Flange
15 = 1 ½" Flange
20 = 2" Flange
25 = 2 ½" Flange
30 = 3" Flange

Ft - **Flange Type**
TC = Tri-Clamp
BS = Bevel Seat
1 = Other (specify) Consult Factory

B - **Bore Size** (Max 0.260")
1 = 0.260" (6.6)
2 = Other (Specify) Consult Factory

U - **Insertion Length** (Decimal inches)/(Millimeters)

A - **Stem Length** (Decimal inches)/(Millimeters)

M - **Material**
P/PL = 304 SS
R/RL = 316 SS
1 = Other (Specify) Consult Factory
Refer to table 2.0 on page 3-29 in Thermowell section for other materials

Q - **Root Diameter**
1 = 3/4" (19.1)
2 = Other (Specify) Consult Factory

V - **Tip Diameter**
1 = 1/2" (12.7)
2 = 5/8" (15.9)
3 = Other (Specify) Consult Factory

Sample Part No.: SC2R-I-15-TC-1-6.00-7.5-R/RL-1-1

Notes

1. Sanitary thermowells: Meet **USDA** and **3A** sanitary standard 74-01.
   Standard Finish 16-22Ra.
2. Metric dimensions are in brackets

WIKA Instruments Ltd. Thermowell Catalogue, Copyright 2006

Metal Protection Tubes Assembly

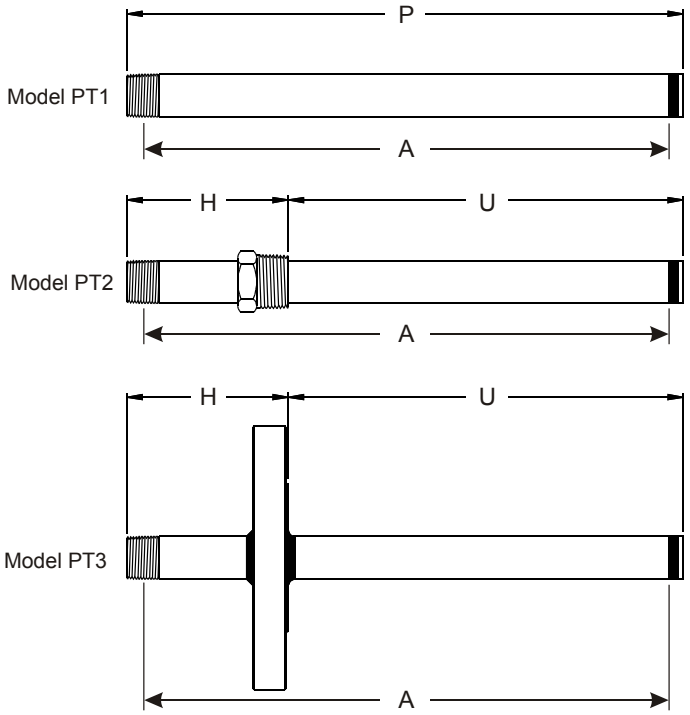

Refer to Assembly Page for A-Dimension

TABLE 1

CODE	PIPE MATERIAL
P	304 Stainless Steel
R	316 Stainless Steel
N	Carbon Steel
L	MONEL 400
J	INCONEL 600
T	347 Stainless Steel
Q	310 Stainless Steel limited size
M	Nickel 200
PL	304 Stainless Steel Low Carbon
RL	316 Stainless Steel Low Carbon
H	HASTELLOY C276
G	HASTELLOY B-2
X	HASTELLOY X
V	410 Stainless Steel
S	321 Stainless Steel
M1	Nickel 201
J1	INCONEL 601
J5	INCONEL 625
K	INCOLOY 800
K5	INCOLOY 825
TI	Titanium

PIPE SCHEDULE

Pipe Size	O.D. in inches	40 (Std.) I.D.	40 (Std.) Wall Thk.	80 (XH) I.D.	80 (XH) Wall Thk.	160 I.D.	160 Wall Thk.	XXH I.D.	XXH Wall Thk.
1/4	.540	.364	.088	.302	.119	N/A	N/A	N/A	N/A
1/2	.840	.622	.109	.546	.147	.464	.188	.252	.294
3/4	1.050	.824	.113	.742	.154	.612	.219	.434	.308
1	1.315	1.049	.133	.957	.179	.815	.250	.599	.358

ORDERING CODE:

PT1 - ☐ - ☐ - X - X - X - X - X - X - ☐ - X - X - ☐
PT2 - ☐ - ☐ - X - X - X - ☐ - X - ☐ - ☐ - ☐ - ☐ - X
PT3 - ☐ - ☐ - ☐ - ☐ - ☐ - ☐ - ☐ - X - ☐ - ☐ - ☐ - X

"P" Dimension (inches) = "A"-Dim + 3/8"

"U" Dimension (inches)

"H" Dimension (inches)

Pipe Material (Table 1)

Process Fitting

1	1/2" NPT
2	3/4" NPT
3	1" NPT
4	1 1/4" NPT
5	1 1/2" NPT

Welding

FP	Full Penetration
PP	Partial Penetration

Flange/Process Connection Material (Table 1)

Flange Face

RF	Raised Face
RTJ	Ring Type Joint
FF	Flat Face

Flange Rating

150#
300#
600#
900#
1500#
2500#

Flange Size

10	1"
15	1 1/2"
20	2"
25	2 1/2"
30	3"
40	4"

Schedule

1	Schedule 40
2	Schedule 80
3	Schedule 160
4	X X Heavy

Pipe Size

1	1/4"*
2	1/2"
3	3/4"
4	1"*

} Refer to Thermocouple Section when used with model 1AE or 1AA assemblies.

* Consult factory when used with an assembly.

Sample Ordering Codes

PT1 - 2 - 2 - R - 12
PT2 - 2 - 2 - R - 3 - R - 3 - 12
PT3 - 2 - 2 - 20 - 300# - RF - R - FP -R - 3 - 12

WIKA Instruments Ltd. Thermowell Catalogue, Copyright 2006

Documents and Reports

Code	Description	Extension 1	Extension 2
DR1	Drawings	1. Dimensional Drawings 2. Dimensional Sketch 3. Certified As-Built Drawings 4. Catalogue Generated Drawings	a. Photocopies b. Diskette
DR2	Mill Test Reports		
DR3	Thermowell Design Report		
DR4	Welders Qualifications		
DR5	Welding Procedure Specification		
DR6	ISO Registration Certificate		
DR7	Alberta Labour Certificate		
DR8	Quality Assurance Manual		
DR9	Certificate of Conformance		

Stamping, Coatings, and Attachments

Code	Description	Extension 1	Extension 2
SC1	Canadian Registration Number		
SC2	Coating Certification		
SC3	Stainless Steel Plug and Chain		
SC4	Tagging, *specify tag no.'s*	1. Stainless Steel 2. Paper 3. Stamp on Thermowell	

Non-Destructive Examinations *(to customer specifications)*

Code	Description	Extension 1	Extension 2
ND1	Liquid Penetrant Inspection		
ND2	Hydrostatic Pressure Test	1. Internal, 15 min. @ *specified pressure* 2. External, 15 min. @ *specified pressure*	
ND3	Heat Treatment Charts and Reports	1. Postweld, *specify* 2. Stabilized, *specify* 3. Annealed, *specify*	
ND4	Hardness Test Reports	1. NACE (MR-01-75), *specify* 2. Micro Hardness, *specify*	
ND5	Radiography Tests		
ND6	Magnetic Particle Inspection		
ND7	Chemical Analysis		
ND8	Positive Material Identification		

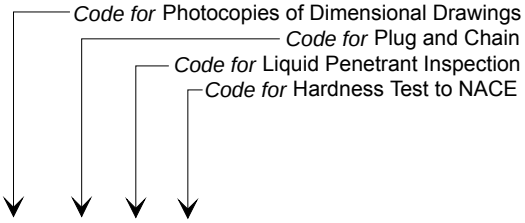

Sample Part No.: [Thermowell Part No. (see pages 3-1 to 3-26)] - DR11a, SC3, ND1, ND41

Notes

1. Consult your sales representative for current pricing on above items and tests.

WIKA Instruments Ltd. Thermowell Catalogue, Copyright 2006

Table 2.0 Material Codes			
Abbreviated Code	Material Description	Bar Type‡	
		Hex	Round
A	Aluminum		●
B	Brass (Alloy 360)	●	
D	309 Stainless Steel		●
E	Copper		●
F1†	C-1/2Mo		●
F2†	1/2Cr-1/2Mo		●
F3V†	3Cr-1Mo-1/4V-Ti-B		●
F5†	5Cr-1/2Mo		●
F9†	9Cr-1Mo		●
F11†	1-1/4Cr-1/2Mo-Si		●
F12†	1Cr-1/2Mo		●
F21†	3Cr-1Mo		●
F22†	2-1/4Cr-1Mo		●
F91†	9Cr-1Mo-V-Cb-N		●
FR†	2Ni-1Cu		●
G	Hastelloy B-2		●
H	Hastelloy C276		●
J	Inconel 600		●
J1	Inconel 601		●
J5	Inconel 625		●
K	Incoloy 800		●
KH	Incoloy 800H		●
KHT	Incoloy 800HT		●
K5	Incoloy 825		●
L	Monel 400		●
M	Nickel 200		●
M1	Nickel 201		●
N1	Carbon Steel (SA-105)		●
N2	Carbon Steel (AISI 1018)		●
P	304 Stainless Steel	●	●
PH	304H Stainless Steel High Carbon	●	●
PL	304L Stainless Steel Low Carbon	●	●
P/PL	304/304L Dual Certified§ Stainless Steel	●	●
Q	310 Stainless Steel		●
R	316 Stainless Steel	●	●
RH	316H Stainless Steel High Carbon	●	●
RL	316L Stainless Steel Low Carbon	●	●
R/RL	316/316L Dual Certified§ Stainless Steel	●	●
S	321 Stainless Steel		●
SH	321H Stainless Steel High Carbon		●
T	347 Stainless Steel		●
TH	347H Stainless Steel High Carbon		●
TI	Titanium (Gr. 2)		●
V	410 Stainless Steel		●
X	Hastelloy X		●
Y	446 Stainless Steel		●
ZZ	Other, *specify*		

Hastelloy is a registered trademark of Haynes International.
Monel, Inconel and Incoloy are registered trademarks of the Inco family of companies.

† Also represents a grade designation in ASME Section II, Part D.
‡ Readily available types are listed.
§ Dual certified meets the requirements of both material grades.

WIKA Instruments Ltd. Thermowell Catalogue, Copyright 2006

Table 2.1 Material Selection Guide			
Corrodent	**Temp. (F/C)**	**Concentration**	**Recommended Material**
A			
Acetic Acid	212/100	All	Monel 400
Acetic Anhydride	300/149		Nickel 200
Acetone	212/100	All	304, 304/304L SS
Acetylene	400/205		304, 304/304L
Alcohols	212/100	All	304, 304/304L SS
Aluminum (Potassium/Sodium)	300/149	All	Hastelloy C276
Aluminum Chloride	212/100	All	Hastelloy B-2
Aluminum Sulfate	212/100	All	316, 316/316L SS
Ammonia, Dry	212/100	All	304, 304/304L, 316, 316/316L SS
Ammonia Hydroxide (Ammonia, Aqua)	212/100	All	304, 304/304L, 316, 316/316L SS
Ammonium Chloride	300/149	50%	Monel 400
Ammonium Nitrate	300/149	All	304, 304/304L SS
Ammonium Sulfate	212/100	All	316, 316/316L SS
Amyl Acetate	300/149	All	304, 304/304L SS
Aniline	75/24		Monel 400
Asphalt	250/121		304, 304/304L SS
Atmosphere (Industrial and Marine)			304, 304/304L SS
B			
Barium Compounds			See Calcium
Beer	70/21		304, 304/304L SS
Benzene (Benzol)	212/100		Carbon Steel
Benzoic Acid	212/100	All	316, 316/316L SS
Bleaching Powder	70/21	15%	Monel 400
Borax	212/100	All	Brass
Bordeaux Mixture	200/93		304, 304/304L SS
Boric Acid	400/205	All	316, 316/316L SS
Bromine	125/52	Dry	Monel 400
Butane	400/205	All	Carbon Steel
Butyl Alcohol	212/100	All	304, 304/304L SS
Butyric Acid	212/100		Hastelloy C276
C			
Calcium Bisulphite	75/24	All	Hastelloy C276
Calcium Chloride	212/100	All	Hastelloy C276
Calcium Hydroxide	300/149	20%	Hastelloy C276
Calcium Hypochlorite	70/21	15%	Monel 400
Carbolic Acid	212/100	All	316, 316/316L SS
Carbon Dioxide, Dry	800/427	All	Brass
Carbonated Water	212/100	All	304, 304/304L SS
Carbonated Beverages	212/100		304, 304/304L SS
Carbon Disulfide	200/93		304, 304/304L SS
Carbon Tetrachloride	125/52	All	Monel 400
Chlorine, Dry	100/38		Monel 400
Chlorine, Moist	100/38	All	Monel 400
Chloracetic Acid	212/100	All	Monel 400
Chloroform, Dry	212/100		Monel 400
Chromic Acid	300/149	All	Hastelloy C276
Cider	300/149	All	304, 304/304L SS
Citric Acid	212/100	All	Hastelloy C276
Copper (10) Chloride	212/100	All	Hastelloy C276
Copper (10) Nitrate	300/149	All	316, 316/316L SS
Copper (10) Sulfate	300/149	All	316, 316/316L SS
Copper Plating Solution (Cyanide)	180/82		304, 304/304L SS
Copper Plating Solution (Acid)	75/24		304, 304/304L SS

Hastelloy is a registered trademark of Haynes International.
Monel, Inconel and Incoloy are registered trademarks of the Inco family of companies.

continued...

WIKA Instruments Ltd. Thermowell Catalogue, Copyright 2006

Table 2.1 Material Selection Guide *continued...*			
Corrodent	**Temp. (F/C)**	**Concentration**	**Recommended Material**
Corn Oil	200/93		304, 304/304L SS
Creosote	200/93	All	304, 304/304L SS
Crude Oil	300/149		Monel 400
E			
Ethyl Acetate	300/149	All	304, 304/304L SS
Ethyl Chloride, Dry	500/260		Carbon Steel
Ethanol	212/100	All	304, 304/304L SS
Ethylene Glycol (Uninhibited)	212/100	All	304, 304/304L SS
Ethylene Oxide	75/24		Carbon Steel
F			
Fatty Acids	500/260	All	316, 316/316L SS
Ferric Chloride	75/24	All	Hastelloy C276
Ferric Sulfate	300/149	All	304, 304/304L SS
Formaldehyde	212/100	40%	316, 316/316L SS
Formic Acid	300/149	All	316, 316/316L SS
Freon	300/149		Carbon Steel
Fluorine, Anhydrous	100/38		304, 304/304L SS
Furfural	450/232		316, 316/316L SS
G			
Gasoline	300/149		Carbon Steel
Glucose	300/149		304, 304/304L SS
Glue, pH 6-8	300/149	All	304, 304/304L SS
Glycerine	212/100	All	Brass
H			
Hydrobromic Acid	212/100	All	Hastelloy C276
Hydrochloric Acid, (37%-38%)	225/107	All	Hastelloy B-2
Hydrogen Chloride, Dry	500/260		304, 304/304L SS
Hydrocyanic Acid	212/100	All	304, 304/304L SS
Hydrofluoric Acid	212/100	60%	Monel 400
Hydrogen Fluoride, Dry	175/80		Carbon Steel
Hydrogen Peroxide	125/52	10-100%	304, 304/304L SS
K			
Kerosene	300/149	All	Carbon Steel
L			
Lacquers and Thinners	300/149	All	304, 304/304L SS
Lactic Acid	300/149	All	316, 316/316L SS
Lime	212/100	All	316, 316/316L SS
Linseed Oil	75/24		Carbon Steel
M			
Magnesium Chloride	212/100	50%	Nickel 200
Magnesium Hydroxide (or Oxide)	75/24	All	304, 304/304L SS
Magnesium Sulfate	212/100	40%	304, 304/304L SS
Mercuric Chloride	75/24	10%	Hastelloy C276
Mercury	700/371	100%	Carbon Steel
Methylene Chloride	212/100	All	304, 304/304L SS
Methyl Chloride, Dry	75/24		Carbon Steel
Milk, Fresh or Sour	180/82		304, 304/304L SS
Molasses	300/149		304, 304/304L SS
N			
Natural Gas	70/21		304, 304/304L SS
Nitric Acid	75/24	All	304, 304/304L SS
Nitric Acid	300/149	All	316, 316/316L SS

Hastelloy is a registered trademark of Haynes International.
Monel, Inconel and Incoloy are registered trademarks of the Inco family of companies.

continued...

WIKA Instruments Ltd. Thermowell Catalogue, Copyright 2006

Table 2.1 Material Selection Guide *continued...*			
Corrodent	**Temp. (F/C)**	**Concentration**	**Recommended Material**
O			
Oxygen	75/24	All	Carbon Steel
Oleic Acid	500/260	All	316, 316/316L SS
Oxalic Acid	212/100	All	Monel 400
P			
Photographic Bleaching	100/38	All	304, 304/304L SS
Palmitic Acid	500/260	All	316, 316/316L SS
Phosphoric Acid	212/100	All	316, 316/316L SS
Phenol	212/100	All	316, 316/316L SS
Potassium Compounds			See Sodium Compounds
Propane	300/149		Carbon Steel
R			
Rosin	700/371	100%	316, 316/316L SS
S			
Sea Water	75/24		Monel 400
Soap & Detergents	212/100	All	304, 304/304L SS
Sodium Bicarbonate	212/100	20%	316, 316/316L SS
Sodium Bisulphite	212/100	20%	304, 304/304L SS
Sodium Bisulphate	212/100	20%	304, 304/304L SS
Sodium Carbonate	212/100	40%	316, 316/316L SS
Sodium Chloride	300/149	30%	Monel 400
Sodium Chromate	212/100	All	316, 316/316L SS
Salt or Brine	300/149	30%	Monel 400
Sodium Cyanide	212/100	All	304, 304/304L SS
Sodium Hydroxide	212/100	30%	316, 316/316L SS
Sodium Hypochlorite	75/24	20%	Hastelloy C276
Sodium Nitrate	212/100	40%	304, 304/304L SS
Sodium Nitrite	75/24	20%	316, 316/316L SS
Sodium Phosphate	212/100	10%	Carbon Steel
Sodium Silicate	212/100	10%	Carbon Steel
Sodium Sulfate	212/100	30%	316, 316/316L SS
Sodium Sulfide	212/100	10%	316, 316/316L SS
Sodium Sulfite	212/100	30%	304, 304/304L SS
Sodium Thiosulfate	212/100	All	304, 304/304L SS
Steam			304, 304/304LSS
Stearic Acid	500/260	All	316, 316/316L SS
Sugar Solutions	300/149		304, 304/304L SS
Sulfur	500/260		304, 304/304L SS
Sulfur Chloride	75/24	Dry	316, 316/316L SS
Sulfur Dioxide	500/260	Dry	316, 316/316L SS
Sulfur Trioxide	500/260	Dry	316, 316/316L SS
Sulfuric Acid	212/100	10%	316, 316/316L SS
Sulfuric Acid	212/100	10-90%	Hastelloy B-2
Sulfuric Acid	212/100	90-100%	316, 316/316L SS
Sulfuric Acid, Fuming	175/80		Hastelloy C276
Sulfurous Acid	75/24	20%	316, 316/316L SS
T			
Titanium Tetrachloride	75/24	All	316, 316/316L SS
Tannic Acid	75/24	40%	Hastelloy B-2
Toluene	75/24		Carbon Steel
Trichloracetic Acid	75/24	All	316, 316/316L SS
Trichlorethylene	300/149	Dry	Monel 400
Turpentine	75/24		316, 316/316L SS
V			
Varnish	150/66		Carbon Steel
Z			
Zinc Chloride	212/100	All	Hastelloy B-2
Zinc Sulfate	212/100	All	316, 316/316L SS

Hastelloy is a registered trademark of Haynes International.
Monel, Inconel and Incoloy are registered trademarks of the Inco family of companies.

WIKA Instruments Ltd. Thermowell Catalogue, Copyright 2006

Table 2.2 Pipe Sizes									
Pipe Size	Pipe O.D.	Schedule 40		Schedule 80		Schedule 160		XX Heavy	
		I.D.	Wall	I.D.	Wall	I.D.	Wall	I.D.	Wall
1/2"	0.840"	0.622"	0.109"	0.546"	0.147"	0.466"	0.187"	0.252"	0.294"
3/4"	1.050"	0.824"	0.113"	0.742"	0.154"	0.614"	0.218"	0.434"	0.308"
1"	1.315"	1.049"	0.133"	0.957"	0.179"	0.815"	0.250"	0.599"	0.358"
1-1/4"	1.660"	1.380"	0.140"	1.278"	0.191"	1.160"	0.250"	0.896"	0.382"
1-1/2"	1.900"	1.610"	0.145"	1.500"	0.200"	1.338"	0.281"	1.100"	0.400"
2"	2.375"	2.067"	0.154"	1.939"	0.218"	1.689"	0.343"	1.503"	0.436"
2-1/2"	2.875"	2.469"	0.203"	2.323"	0.276"	2.125"	0.375"	1.771"	0.552"
3"	3.500"	3.068"	0.216"	2.900"	0.300"	2.626"	0.437"	2.300"	0.600"
3-1/2"	4.000"	3.548"	0.226"	3.364"	0.318"	-	-	2.728"	0.636"
4"	4.500"	4.026"	0.237"	3.826"	0.337"	3.438"	0.531"	3.152"	0.674"
5"	5.563"	5.047"	0.258"	4.813"	0.375"	4.313"	0.625"	4.063"	0.750"
6"	6.625"	6.065"	0.280"	5.761"	0.432"	5.189"	0.718"	4.897"	0.864"
8"	8.625"	7.981"	0.322"	7.625"	0.500"	6.813"	0.906"	6.875"	0.875"
10"	10.750"	10.020"	0.365"	9.562"	0.594"	8.500"	1.125"	8.750"	1.000"
12"	12.750"	11.938"	0.406"	11.374"	0.688"	10.126"	1.312"	10.750"	1.000"

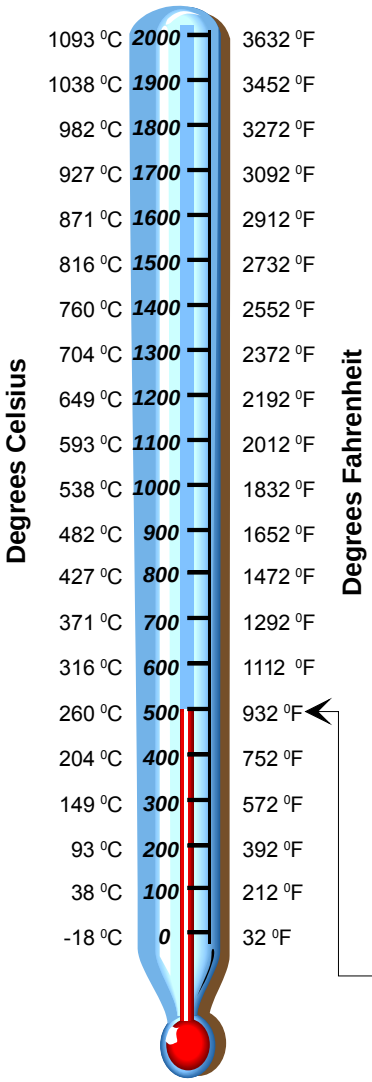

Figure 2.0

Table 2.3 Standard Conversions		
To Convert	Into	Multiply By
Cubic meters per kilogram	Cubic feet per pound (mass)	16.01846
Feet	Millimeters	304.8
Kilograms	Pounds	2.2046
Kilograms per hour	Pound (mass) per hour	2.2046
Kilopascal	Pounds per square inch	0.1450
Meters	Feet	3.2808
Meters	Inches	39.3701
Meters per second	Feet per second	3.2808
Millimeters	Feet	0.003281
Millimeters	Inches	0.03937
Newtons per cubic meter	Pound (force) per cubic foot	0.006366
Square inches	Square feet	0.006944
Square meters	Square feet	10.7639

How to use this Thermo Gauge

Scroll the center column for the required temperature in either unit. The corresponding conversion temperature can be found on either side.

If the temperature is 500°C, the conversion is 932°F

If the temperature is 500°F, the conversion is 260°C

WIKA Instruments Ltd. Thermowell Catalogue, Copyright 2006

ISO 9000 Quality Assurance Program

In the mid 1980's, the International Organization for Standardization set up the first 9000 series of quality assurance standards. These standards basically set up the rules for what is considered to be good quality management practice. The goal of this standard was to give organizations the guidelines for setting up a management system. A quality assurance manual sets out the company policies as they apply to the various sections of the standard. Procedures are prepared to ensure that policies are followed in a consistent manner.

For those seeking registration, all parts of the standard must be set up and fully audited by an accredited registration organization. Following a successful audit, the company is awarded certification.

WIKA Instruments recognized the advantage of certification, not only as a an industry standard but as an effective way to improve our overall manufacturing operation and build confidence in our products both internally and externally. We continue to meet the letter of the standard and the intent.

WIKA Instruments is registered as conforming to the requirements of ISO 9001:2000 quality system standards

Thermowells as a Pressure Fitting

Thermowells are used in a variety of applications where it is desirable or necessary to separate the process from the temperature sensor. Many thermowells are used in pressure applications that fall under the jurisdiction of a provincial regulatory authority. These regulatory authorities require that manufacturers of fittings meet the following requirements:

An approved quality assurance program;
Approved welding procedure specifications;
All pressure welding is carried out by qualified Pressure “B” welders;
Canadian Registration Number (CRN) for all pressure fittings; and
The stamping or tagging of items to ensure complete traceability.

In Alberta, the provincial regulatory authority is the Alberta Department of Labour. Alberta Labour has empowered the Alberta Boiler Safety Association (ABSA) to administer the regulations.

WIKA Instruments has met all of the above requirements for many years and has welding procedures for a wide variety of alloy steels, exotic nickel alloys and titanium. Our Canadian Registration Number is available upon request.

Temperature Sensors in Hazardous Locations

While a thermowell is generally designed to separate the process from the sensor, it may also become an integral part of the temperature sensor assembly for use in hazardous locations. As a result, the “instrument” side of the fitting must meet the requirements of the electrical jurisdictional authority (e.g., Canadian Standards Association, Factory Mutual). These requirements are the instrument thread engagement, instrument thread type and internal pressure rating of the thermowell, as defined in C.S.A. C22.2.

WIKA Instruments has obtained C.S.A. certification for our catalogue style thermowells to facilitate their use in hazardous location applications.

WIKA Instruments Ltd. Thermowell Catalogue, Copyright 2006

Positive Material Identification (PMI)

As part of our quality assurance program, WIKA Instruments traces all materials used to construct thermowells and protection tubes e.g., bar, flanges and pipe. For critical service where additional confidence in the materials is required, the material composition can be measured using a nuclear analyzer. This non-destructive technique utilizes a probe that exposes the metal to low energy X-rays. A sensor receives the resulting radiation from the metal and determines the chemical composition.

The analyzer is limited to certain metals e.g., Cr, Ni, Mo, Mn, Ti, V, Nb, Cu, W, Co and Fe. Nonmetals such as Carbon, Sulphur and Phosphorus are not detected.

This technique works best on stainless steels e.g., grade 304, 316, 410 and low alloy steels (Cr-Mo), but poorly on alloys with low Nickel content (less than 1%). PMI service is provided as an option and is carried out by independent technicians. Full reports are available on request.

Liquid Penetrant Inspection (LPI)

Liquid penetrant inspection is a non-destructive technique used to locate and evaluate surface defects on nonporous materials. It is used commonly on weldments where additional confidence is needed to ensure a high quality weld surface. The major advantages of this technique are cost, portability and ease of use.

The surface to be examined must be cleaned before testing. A penetrant is applied to the surface. This penetrant leaches into any surface defects that may be present. After a short time, excess penetrant is removed and a developer is applied. The developer draws penetrant out of any defects that may be present and gives an indication of location, shape and approximate size. Following the test, both penetrant and developer are removed by washing to restore the original clean surface.

WIKA Instruments has qualified personnel, complete with documented procedures for performing liquid penetrant inspection. Inspection reports can be provided upon request.

Hydrostatic Pressure Testing (External and Internal)

Hydrostatic testing is a non-destructive test used to examine the integrity of a thermowell by subjecting it to a pressure for a specified time. The thermowell is tested for leaks or pressure drops using chart recorders and visual inspection methods. Test pressures are generally one and a half times the maximum allowable working pressure of the process and may be applied to the internal or external surface of the thermowell depending on the requirements of the customer.

WIKA Instruments has in-house capabilities for hydrostatic testing thermowells in both external and internal configurations. We are able to use these techniques to verify welds, threaded connections and wall thicknesses.

WIKA Instruments Ltd. Thermowell Catalogue, Copyright 2006

Surface Finish

In an ideal world as a machine cutting tool removes material from a part, it leaves no imperfections. Minute clearances in the machine tool, moving parts, vibration of the tool, wear of the cutting insert, small variations in the pressure applied by the machine to the cutting insert and irregularities in the material all affect the final surface finish of the part. Following the cutting process, the surface is characterized by microscopic peaks and valleys.

There are two common methods of expressing roughness. They are the Arithmetic Average Roughness Height (AARH) and the Root Mean Square (RMS) Average. Calculation of the Arithmetic Average Roughness Height involves measuring the distance of the peaks and valleys and performing an arithmetic average of the measurements. Alternately the calculation of Root Mean Square Average involves measuring the distance of peaks and valleys, adding the square of these measurements and calculating the square root of the total. The RMS value is approximately 11% higher than the AARH value.

Flange Face Surface Finish

The American National Standards Institute (ANSI) code for flanges and flanged fittings (B16.5) requires that the flange face has a specific roughness to ensure that this surface be compatible with the gasket and provide a high quality seal. A serrated finish, either concentric or spiral, is required with 30 to 55 grooves per inch and a resultant roughness between 125 and 500 microinches.

Welding

Welding is a process of joining two metals by heating the metals to a suitable temperature. It may be carried out with or without the application of pressure, and with or without a filler metal. If a filler metal is used then it must be compatible with the base materials.

Welds may be a *Full Penetration* or *Partial Penetration*, *see figures 1.0 and 1.1 on page 3-13.* A full penetration weld ensures a fully welded interface between the two parts and is generally the strongest joint. A partial penetration weld, on the other hand, consists of a partially welded interface with filler metal being laid on to the surface of the two metals.

Welding is a generic term for several different welding processes. The process may be manual, semiautomatic or automatic. Generally arc welding is implied. Common techniques are Shielded Metal Arc Welding (SMAW), Gas Tungsten Arc Welding (GTAW) and Gas Metal Arc Welding (GMAW).

WIKA Instruments standard procedure for thermowell welding is GTAW, full penetration welds. This technique provides for an efficient application of weld metal, strong joint, clean weld surface and homogenous weld. Homogeneity is especially important in services where weld voids can lead to hydrogen induced cracking.

WIKA Instruments Ltd. Thermowell Catalogue, Copyright 2006

Overlays

Introduction

Overlay is a term used to describe a metal coating. The overlay material is usually applied to a metal surface for a variety of reasons. Corrosion and erosion resistance are two common applications.

Overlays permit the use of relatively inexpensive materials for the workpiece while applying the relatively expensive overlay to the surfaces exposed to adverse conditions.

A summary of several overlay techniques is given below.

Spray and Fuse Powders

The spray and fuse (flame spray) hardfacing process uses manual or automatic equipment to deposit finely divided, semi-molten particles. Hardfacing with oxy-acetylene gas allows thin, hard coatings to be applied quickly and uniformly. Deposits ranging from 0.020 to 0.060 in. (0.51 to 1.5 mm) thick can be made by building up several layers at a rate of 0.005 to 0.010 in. (0.13 to 0.25 mm) per pass. Maximum build-up is about 0.080 in. (2 mm). Deposit thickness is controlled by the traverse speed of rotation (when done between centers on cylindrical parts), powder flow, and the number of layers applied. Coatings applied by cold spraying are under a certain degree of tensional stress and, for this reason, the fusing operation should immediately follow spraying. This procedure eliminates any risk of the coating cracking before the heat required for fusing is applied. Fusion is carried out using a conventional oxyacetylene torch provided with a large multi-jet nozzle designed to spread the heat over a wide area.

Plasma Spray Surfacing Powders

Plasma spray surfacing is a non-transferred arc process that uses the arc plasma to melt the powder particles and a high-velocity gas flow to propel the particles onto the base metal. The resulting deposit normally 0.005 to 0.010 in. (0.13 to 0.25 mm) thick, contains voids. Densities of 90 to 95 percent can be obtained, however, this depends on the alloy and the procedure used. Because of the high arc temperatures, this process can be used to apply refractory coatings that cannot be applied with the spray and fuse process. Although both the plasma spray and spray and fuse processes produce coatings that are bonded to the base metal, the coatings applied with the plasma spray process have superior bond strength. Just about any material that does not sublimate can be sprayed. Even though the arc flame is extremely hot, very little heat build-up occurs on the part during spraying. Coatings thus can be applied to finished parts without distorting them. Very smooth coatings can be obtained, and finishing is often unnecessary. Powders can be applied manually or by mechanized equipment.

WIKA Instruments Ltd. Thermowell Catalogue, Copyright 2006

Manual Torch Powders

Manual powder torches enable the application of many hardfacing alloys. By following general oxy-acetylene surfacing practice, deposits that are smooth, thin and dense can be obtained. Powder application and fusion take place in one operation. Deposit thickness is controlled by powder flow rate and movement of the torch. A dilution of 1 to 5% in the deposit occurs from this process. Deposits ranging from 0.030 to 0.125 in. (0.76 to 3.2 mm) thick can be applied at a rate of 0.050 in. (1.3 mm) per pass. "Sweating" of the base metal during surfacing generates a fusion type bond with the hardfacing alloy. Ease of application and material recovery are enhanced because of close control of the powder flow into the welding flame.

Plasma Transferred Arc (PTA) Surfacing Powders

PTA surfacing is a welding process, not a metal spray or coating process. The deposits are homogeneous and fuse to the work piece forming a metallurgical bond. Deposits between 0.025 and 0.25 in. (0.63 to 6.4 mm) thick can be produced rapidly in a single pass. Penetration into the base metal can be controlled closely to very low levels. However, a dilution of 5 to 20% in the deposit can be expected. PTA surfacing fits especially well into high-speed production applications requiring thin weld overlays. Heavy deposits can be made at deposition rates up to 10 to 12 lb. (4.5 to 5.5 kg) per hour. A maximum 1-1/2 in (38.1 mm) bead width can be deposited, although a bead width of not more than 3/4" (19mm) gives the best results. High deposition rates with smooth deposits that reduce material usage and finishing time significantly lower total surfacing costs, compared with other methods (such as gas tungsten arc and oxy-acetylene. PTA surfacing is a mechanized process for applying a fully fused deposit. The process makes use of a constricted arc and uses powdered alloy. The alloy is carried from a powder feeder to the plasma torch in a stream of argon gas. The powder is directed away from the torch into the arc effluent, where it is melted and fusion-bonded to the base metal. A direct current (dc) power source connected between the tungsten electrode and the work piece provides energy for the transferred arc. A second dc power source connected between the tungsten electrode and the arc-constricting orifice supports a non-transferred arc. This non-transferred arc supplements the heat of the transferred arc and serves as a pilot arc to initiate the transferred arc. Argon is passed through a gas diffuser to provide a blanket of shielding gas in and around the arc zone.

WIKA Instruments Ltd. Thermowell Catalogue, Copyright 2006

There are four critical parameters to consider in thermowell design; *Material Compatibility, External Pressure*, *Steady State Bending Stress* and *Flow Induced Vibration*. For our thermowells, the selection is simplified using this guide*, which is based on the Performance Test Code, ASME/ANSI PTC 19.3.

External Pressure:

When a thermowell is subjected to external pressure the wall thickness must be adequate to support this pressure. The pressure rating of the process connection (i.e. flange, thread, etc.) must also be considered. The *Maximum Operating Pressure* of the thermowell is always the lesser of the two.

The calculation procedure for determining the *Maximum External Pressure* is defined by the ASME Section VIII Division I. The results of these calculations are presented in Figures 2.2 through 2.9 for selected materials.

Select the style and profile of the thermowell.

Options are stepped, tapered, straight, flanged, etc.

Obtain the ratio of Bore Diameter (B) to Tip Diameter (V) from Figure 2.1 on page 3-43.

Select an appropriate material for the application

See page 3-29 for a guide. Find the corresponding figure for the material selected, *refer to pages 3-43 and 3-44.* If a figure is not available then refer to the applicable code for a calculation procedure.

Determine the Maximum Operating Temperature for the thermowell.

This is the highest operating temperature expected during normal service. If this temperature does not correspond with a temperature given in the figure, interpolate between nearest temperatures.

Obtain the Maximum External Pressure from the appropriate figure.

Maximum External Pressure is the pressure rating of the insertion length.

Obtain the Maximum Pressure Rating of the process connection and compare it to the Maximum Operating Pressure.

Maximum Operating Pressure is the highest operating pressure expected during normal service.

Both the Maximum External Pressure and the Process Connection Pressure Rating must be higher than the Maximum Operating Pressure for an acceptable design.

Flow Induced Vibration:

When a thermowell is inserted into flowing liquid or gas, circular flow is created downstream of the thermowell. These circular flow patterns are called von Karman (wake) vortices. These vortices break away periodically, known as vortex shedding, and cause a regular change in the force on the thermowell. If the regular change, or frequency, of vortex shedding is close to the natural frequency of the thermowell, premature failure of the thermowell can result. This is usually a concern when fluid velocity is high.

This calculation is not required when the thermowell is inserted in fluid that is not moving.

The criteria for an acceptable design is...

$$\frac{f_w}{f_n} < 0.8$$

where...

f_w is the von Karman frequency (Hz), and

f_n is the natural frequency (Hz) of the thermowell insertion length.

This ratio is known as the *Frequency Ratio*.

* A more comprehensive *Thermowell Design Guide* is now available on diskette. Please consult a sales representative for a copy.

WIKA Instruments Ltd. Thermowell Catalogue, Copyright 2006

The *von Karman Frequency* is found using...

$$f_w = \frac{2.64}{3600}\frac{vm}{VA}$$

where...

v is the specific volume of the fluid (ft^3/lbm),
m is the mass flow rate of fluid (lbm/hr),
V is the tip diameter (inches), and
A is the cross sectional area of the pipe based on inside diameter (ft^2), A = $\pi D^2/4/144$.

The *Natural Frequency* is found using...

$$f_n = \frac{K_f}{U^2}\sqrt{\frac{E}{y}}$$

where...

K_f is a constant given in Table 3.3 on page 3-42,
U is the insertion length of the thermowell (inches),
E is the modulus of elasticity at maximum operating temperature from Table 3.0 on page 3-42 (psi), and
y is the specific weight of the thermowell material (lbf/in^3).

If the *Frequency Ratio* is greater than or equal to 0.8, the length of the thermowell must be reduced. Recalculate *Natural Frequency* with the new insertion length 'U' and check the *Frequency Ratio* again.

Steady State Bending Stress:

When a thermowell is inserted into moving fluid it is subjected to a steady state bending stress. This stress is due to the drag force on the thermowell. The longer the thermowell, the higher the stress.

This calculation is not required when the thermowell is inserted in fluid that is not moving. It does not account for bending stress due to thermowell weight. A calculation procedure for this case can be found in any engineering stress analysis text.

The maximum length can be calculated using...

$$U_{max} = \frac{K_2}{V_f}\sqrt{\frac{v(S - K_3 P_o)}{1 + F_M}}$$

where...

U_{max} is the maximum insertion length (inches),
V_f is the fluid velocity (ft/s), V_f = mv/A/60,
v is the specific volume of the fluid (ft^3/lbm),
S is the allowable stress for the material at design temperature from Table 3.1 on page 3-42 (psi),
P_o is the maximum operating pressure (psig),
F_M is the magnification factor (see below), and
K_2, K_3 are constants, see Table 3.2 on page 3-42.

Calculate F_M using...

$$F_M = \frac{(f_w / f_n)^2}{1 - (f_w / f_n)^2}$$

The above calculations for *Flow Induced Vibration* and *Steady State Bending Stress* apply only to...

- tapered or straight thermowells (not stepped),
- single phase flow, and
- thermowells inserted perpendicular to the flow.

All calculations assume no corrosion allowance is required.

WIKA Instruments Ltd. Thermowell Catalogue, Copyright 2006

Sample Calculation

External Pressure:

Thermowell Style and Profile ..... Tapered, 1-1/2" Class 1500 Flange ('K'-style)

Probe Diameter ..... 1/4"

Bore to Tip Diameter Ratio ..... 0.260/0.75 = 0.35, *see figure 2.1 on page 3-43.*

Material ..... 316 Stainless Steel (SA-479 Bar)

Design Temperature ..... 630°F

Maximum External Pressure ..... 10,000 psi, *from figure 2.5 on page 3-44 at 630°F*

Flange Pressure Rating ..... 2160 psi (from ASME B16.5)

Maximum Operating Pressure (P_O) 2000 psi

The thermowell is **acceptable** since both *Flange Pressure Rating* and *Maximum External Pressure* are greater than the *Maximum Operating Pressure*.

Flow Induced Vibration:

Fluid ..... Saturated Water

Specific Volume ($_V$) ..... 0.02565 ft^3/lb

Mass Flow Rate (*m*) ..... 2.50 x 10^6 lbm/hr

Tip Diameter (V) ..... 3/4 inch

Pipe ..... 10" NPS Schedule 80

Pipe Inside Diameter (D_i) ..... 9.562 inches

Insertion Length (U) ..... 7.5 inches

K_f ..... 2.08, *from table 3.3 on page 3-42*

Modulus of Elasticity (E) ..... 25.2 x 10^6 psi, *from table 3.0 on page 3-42*

Specific Weight ($_\gamma$) ..... 0.286 lb/in^3

f_w = 126 Hz, f_n = 347 Hz, f_w/f_n = 0.36 The thermowell design is **acceptable** since f_w/f_n < 0.80.

Steady State Bending Stress:

K_2 ..... 37.5, *from table 3.2 on page 3-42*

K_3 ..... 0.116, *from table 3.2 on page 3-42*

Specific Volume ($_n$) ..... 0.02565 ft^3/lb

Allowable Stress (S) ..... 12,300 psi, *from table 3.1 on page 3-42*

Maximum Operating Pressure (P_O) 2000 psi

F_M = 0.149, V_f = 35.7 ft/s, U_{max} = 17.2 inches The thermowell design is **acceptable** since U_{max} > **U**.

A Final Note To Our Customers: WIKA Instruments has made every reasonable attempt to validate the above calculation procedure. However, the responsibility for validation and design lies with the user. This information is provided as a guide and should not be considered a substitute for professional engineering design. Consult the latest Performance Test Code, ASME/ANSI PTC 19.3, and other applicable codes for a complete calculation procedure.

WIKA Instruments Ltd. Thermowell Catalogue, Copyright 2006

Table 3.0 Modulus of Elasticity (x 10^{-6} psi)*															
Material	Temperature, °F (°C)														
	70 (21)	200 (93)	300 (150)	400 (200)	500 (260)	600 (315)	700 (370)	800 (425)	900 (480)	1000 (540)	1100 (590)	1200 (650)	1300 (700)	1400 (760)	1500 (815)
Stainless Steel**	28.3	27.6	27	26.5	25.8	25.3	24.8	24.1	23.5	22.8	22.1	21.2	20.2	19.2	18.1
F11 1¼Cr ½Mo	29.7	29	28.5	27.9	27.5	26.9	26.3	25.5	24.8	23.9	23	21.8	20.5	18.9	-
Alloy 600	31	30.2	29.9	29.7	29	28.7	28.2	27.6	27	26.4	25.19	25.3	-	-	-
Alloy 800, 825, C276	28.5	27.8	27.4	27.1	26.6	26.4	25.9	25.4	24.8	24.2	23.8	23.2	-	-	-

* Multiply table values by $1x10^{6}$ to obtain Modulus of Elasticity in psi. Interpolate between temperatures listed.
** Valid for 304, 310S, 316, 321, 347 stainless steel. May also be used for carbon steel (SA-105).

Table 3.1 Allowable Stress (ksi)*															
Material	Temperature, °F (°C)														
	to 100 (38)	200 (93)	300 (150)	400 (200)	500 (260)	600 (315)	700 (370)	800 (425)	900 (480)	1000 (540)	1100 (590)	1200 (650)	1300 (700)	1400 (760)	1500 (815)
Carbon Steel (SA-105)	17.5	17.5	17.5	17.5	17.5	17.5	16.6	12	6.5	2.5	-	-	-	-	-
F11 (SB-182)1¼Cr ½Mo	17.5	17.5	17.5	17.5	17.5	17.5	17.5	17.5	13.7	6.3	2.8	1.2	-	-	-
304 (SA-479)	18.8	15.7	14.1	12.9	12.1	11.4	11.1	10.6	10.2	9.8	8.9	6.1	3.7	2.3	1.4
316 (SA-479)	18.8	17.7	15.6	14.3	13.3	12.6	12.1	11.7	11.5	11.3	11	7.4	4.1	2.3	1.3
310S (SA-479)	18.8	17.6	16.1	15.1	14.3	13.7	13.3	12.9	12.5	9.9	-	-	-	-	-
321 or 347 (SA-479)	18.8	17.8	16.4	15.3	14.3	13.5	12.9	12.5	12.3	12	6.9	3.6	1.7	0.8	0.3
Alloy 600 (SB-166)	20	20	20	20	20	20	19.6	19.1	16	7	3	2	-	-	-
Alloys 800, 825, C276	18.7	18.7	17.9	17.2	16.7	16.3	15.9	15.5	15.1	14.7	13	6.6	2	1.1	0.8

* Multiply table value by 1000 to obtain the Allowable Stress in psi.
Source: ASME Section VIII Div. I (1995) and Section II-D (1995). Interpolate between temperatures listed.

Table 3.2 Values for K_2 , K_3				
Stress Constant	Bore Diameter (inches)			
	0.260	0.385	0.512	0.702
K_2	37.5	42.3	45.5	48.8
K_3	0.116	0.205	0.336	0.572

Table 3.3 Values for K_f				
Insertion Length (inches)	Bore Diameter (inches)			
	0.260	0.385	0.512	0.702
2.5	2.06	2.42	2.81	3.69
4.5	2.07	2.45	2.85	3.80
7.5	2.08	2.46	2.88	3.86
10.5	2.09	2.47	2.89	3.89
16	2.09	2.47	2.90	3.91
24	2.09	2.47	2.90	3.92

References:

ASME/ANSI PTC 19.3-1974
ASME Section VIII Division I, Section II-D
ASME/ANSI B16.5, Pipe Flanges and Flanged Fittings
Marks Standard Handbook for Mechanical Engineers

WIKA Instruments Ltd. Thermowell Catalogue, Copyright 2006

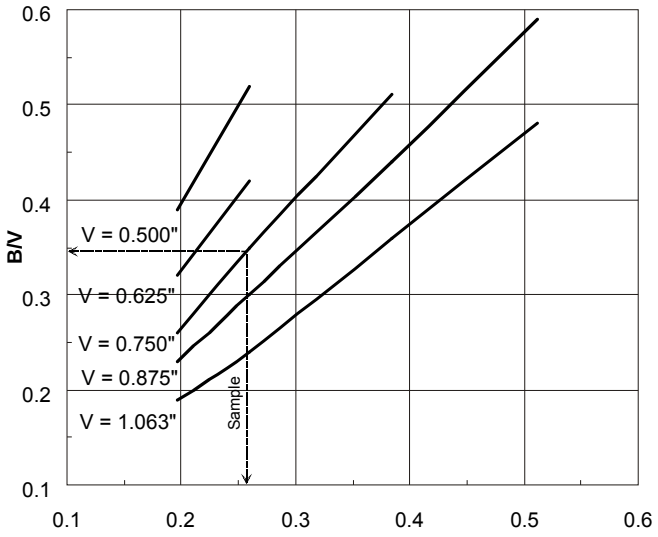

Figure 2.1
Bore Diameter to Tip Diameter Ratio

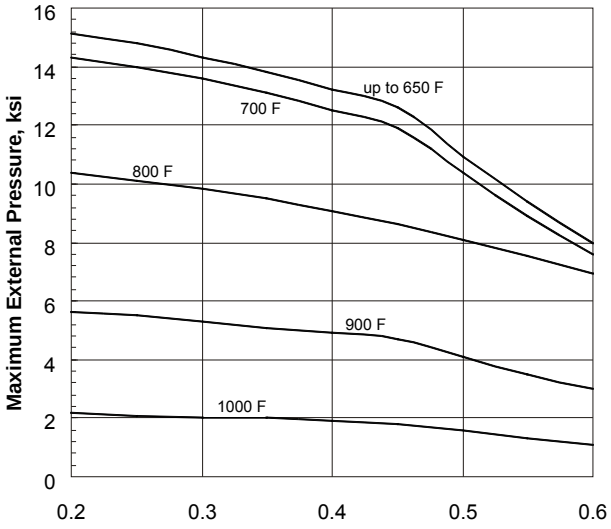

Figure 2.2
Carbon Steel (SA-105)

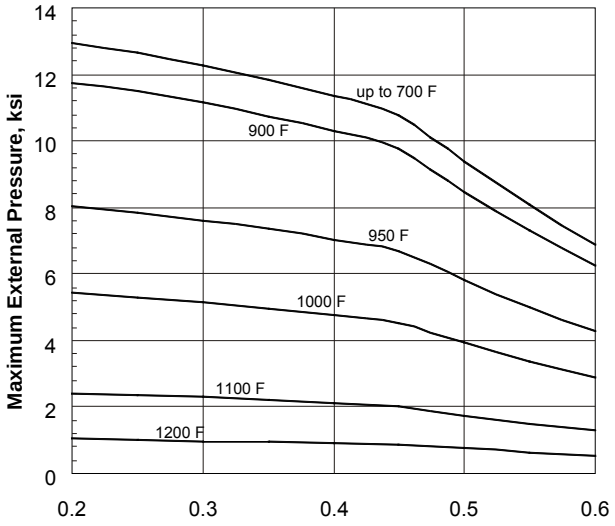

Figure 2.3
F11, 1-1/4% Cr 1/2% Mo (SA-182)

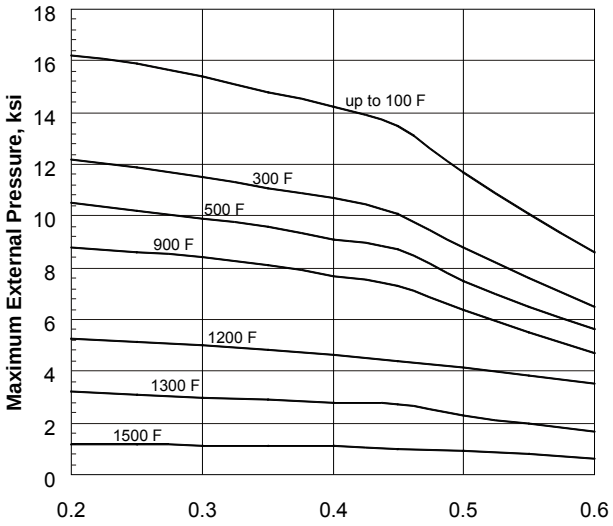

Figure 2.4
304 Stainless Steel (SA-479)

WIKA Instruments Ltd. Thermowell Catalogue, Copyright 2006

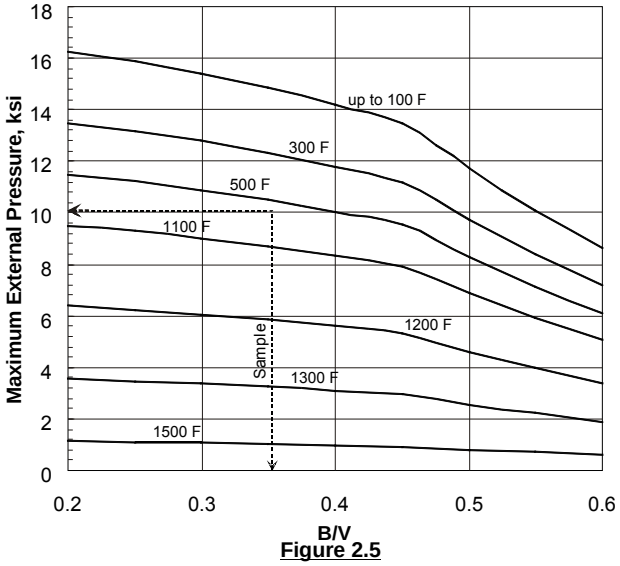

Figure 2.5
316 Stainless Steel (SA-479)

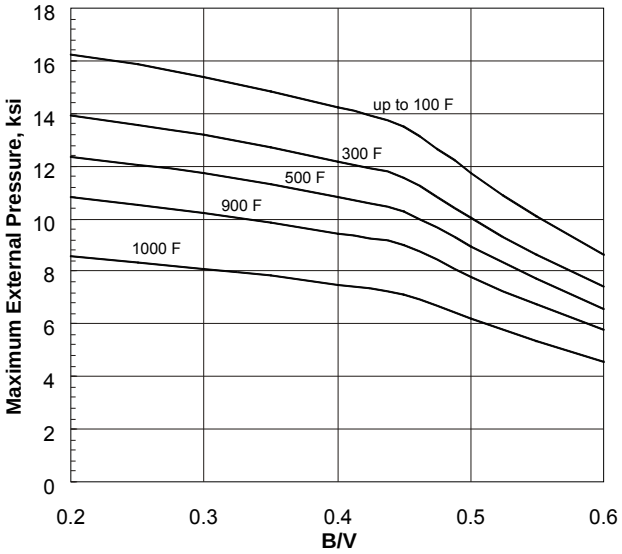

Figure 2.6
310S Stainless Steel (SA-479)

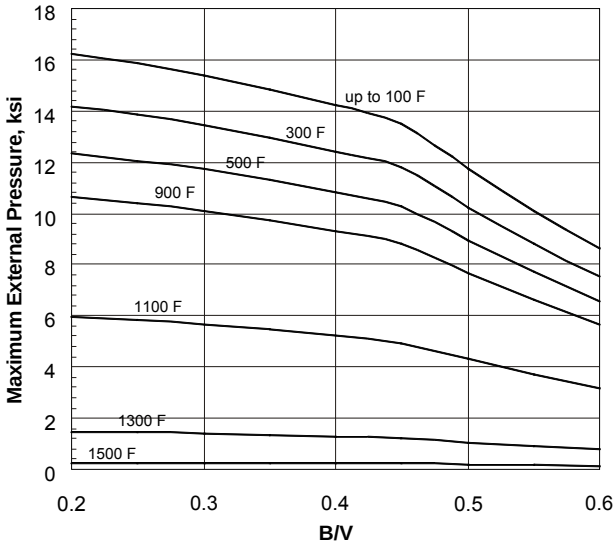

Figure 2.7
321 & 347 Stainless Steel (SA-479)

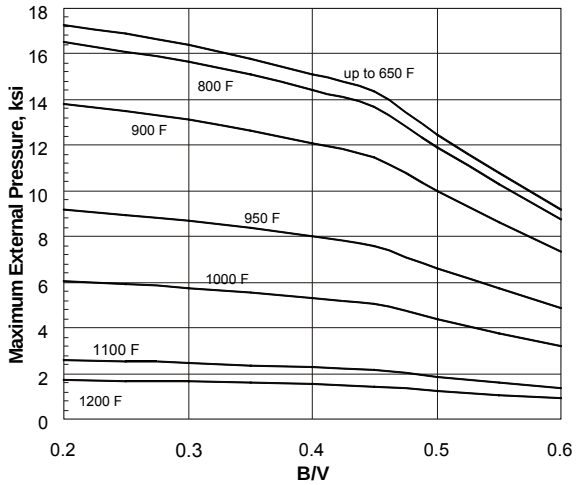

Figure 2.8
Alloy 600 (SA-166)

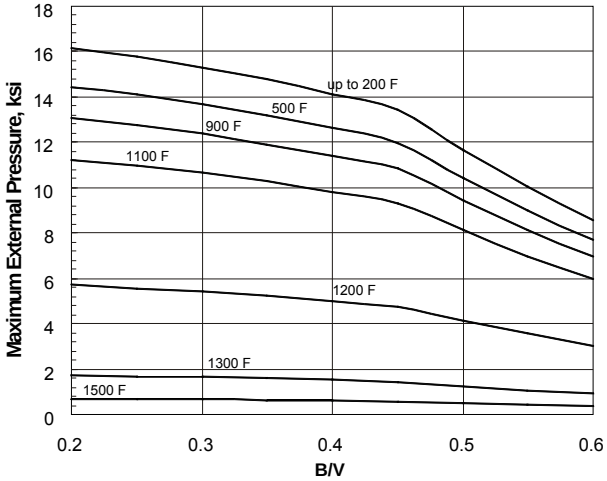

Figure 2.9
Alloy 800 (SB-408), Alloy 825 (SB-425)
Alloy C-276 (SB-574)

WIKA Instruments Ltd. Thermowell Catalogue, Copyright 2006

Fax Inquiry Form

WIKA Instruments
3103 Parsons Road
Edmonton, Alberta, Canada
T6N 1C8
Phone: (780) 463-7035
Fax: (780) 462-0017

WIKA Instruments
2679 Bristol Cirlce, Unit #1
Oakville, Ontario, Canada
L6H 6Z8
Phone: (905) 337-1611
Fax: (905) 337-2716

ALLTEMP SENSORS USA
950 Hall Court
Deer Park, Texas, USA
77536
Phone: (713) 475-0022
Fax: (713) 475-0011

Company: _____ **Name:** _____

Title: _____ **Phone:** _____ **Fax:** _____

Dimensional Sketch

Maximum Operating Temperature: _____ °C or °F *(circle one)*

Maximum Operating Pressure: _____ psig or kPa *(circle one)*

Thermowell Dimensional Data:

Style *(check one):* ☐ Threaded ☐ Socket ☐ Weld-in ☐ Flanged ☐ Vanstone ☐ Wrench Flat
Profile *(check one):* ☐ Tapered ☐ Straight ☐ Stepped

Process Connection (P): _____ Lag Length (T): _____
Head Length (H): _____ Material (M): _____
Insertion Length (U): _____ Bore Size (B): _____
Tip Thickness (Tt): _____ Root Diameter (Q): _____
Stem Length (A): _____ Tip Diameter (V): _____

Testing/Documentation:

Specify: _____

☐ **Check here if you require a credit application**

WIKA Instruments Ltd. Thermowell Catalogue, Copyright 2006

PENBERTHY dimensions

Section 2000
Dimensions 2704.1
Issued 04/09
Replaces 01/09

For: MINIMUM GAGECOCK CENTERS

Series L Gages with Series 100 or 200 Gagecocks

FOR SIDE CONNECTED GAGES ONLY

GAGE MODEL NUMBER		Visible Glass in inches & [cm]	MINIMUM GAGECOCK VESSEL CENTERS IN INCHES & [CM]					
			1/2" NPT GAGE CONNECTION			3/4" NPT GAGE CONNECTION		
Reflex	Transparent		Standard Female Union 120 or 220 Gagecock with Nipples	Optional Male Union 120 or 220 Gagecock	Standard Female Rigid 130 or 230 Gagecock with Nipples	Optional Female Union 120 or 220 Gagecock with Nipples	Optional Male Union 120 or 220 Gagecock	Optional Female Rigid 130 or 230 Gagecock with Nipples
RL	TL							
1RL1	1TL1	3 3/4 [9.5]		5 1/4 [13.3]**			5 5/8 [14.3]**	
1RL2	1TL2	4 3/4 [12.1]		6 1/4 [15.9]**			6 5/8 [16.8]**	
1RL3	1TL3	5 3/4 [14.6]		7 1/4 [18.4]**			7 5/8 [19.4]**	
1RL4	1TL4	6 3/4 [17.1]		8 1/4 [21.0]**			8 5/8 [21.9]**	
1RL5	1TL5	7 7/8 [20.0]		9 3/8 [23.8]**			9 3/4 [24.8]**	
1RL6	1TL6	9 1/8 [23.2]		10 5/8 [27.0]			11 [27.9]	
1RL7	1TL7	10 1/4 [26.0]		11 3/4 [29.8]			12 1/8 [30.8]	
1RL8	1TL8	11 7/8 [30.2]		13 3/8 [34.0]			13 3/4 [34.9]	
1RL9	1TL9	12 5/8 [32.1]		14 1/8 [35.9]			14 1/2 [36.8]	
2RL4	2TL4	15 [38.1]		16 1/2 [41.9]			16 7/8 [42.9]	
2RL5	2TL5	17 1/4 [43.8]		18 3/4 [47.6]			19 1/8 [48.6]	
2RL6	2TL6	19 3/4 [50.2]		21 1/4 [54.0]			21 5/8 [54.9]	
2RL7	2TL7	22 [55.9]		23 1/2 [59.7]			23 7/8 [60.6]	
2RL8	2TL8	25 1/4 [64.1]		26 3/4 [67.9]			27 1/8 [68.9]	
2RL9	2TL9	26 3/4 [67.9]		28 1/4 [71.8]			28 5/8 [72.7]	
3RL6	3TL6	30 3/8 [77.2]		31 7/8 [81.0]			32 1/4 [81.9]	
3RL7	3TL7	33 3/4 [85.7]		35 1/4 [89.5]			35 5/8 [90.5]	
3RL8	3TL8	38 5/8 [98.1]		40 1/8 [101.9]			40 1/2 [102.9]	
3RL9	3TL9	40 7/8 [103.8]		42 3/8 [107.6]			42 3/4 [108.6]	
4RL7	4TL7	45 1/2 [115.6]		47 [119.4]			47 3/8 [120.3]	
4RL8	4TL8	52 [132.1]		53 1/2 [135.9]			53 7/8 [136.8]	
4RL9	4TL9	55 [139.7]		56 1/2 [143.5]			56 7/8 [144.5]	
5RL7	5TL7	57 1/4 [145.4]		58 3/4 [149.2]			59 1/8 [150.2]	
5RL8	5TL8	65 3/8 [166.1]		66 7/8 [169.9]			67 1/4 [170.8]	
5RL9	5TL9	69 1/8 [175.6]		70 5/8 [179.4]			71 [180.3]	
6RL8	6TL8	78 3/4 [200.0]		80 1/4 [203.8]			80 5/8 [204.8]	
6RL9	6TL9	83 1/4 [211.5]		84 3/4 [215.3]			85 1/8 [216.2]	
7RL8	7TL8	92 1/8 [234.0]		93 5/8 [237.8]			94 [238.8]	
7RL9	7TL9	97 3/8 [247.3]		98 7/8 [251.1]			99 1/4 [252.1]	
8RL8	8TL8	105 1/2 [268.0]		107 [271.8]			107 3/8 [272.7]	
8RL9	8TL9	111 1/2 [283.2]		113 [287.0]			113 3/8 [288.0]	
9RL8	9TL8	118 7/8 [301.9]		120 3/8 [305.8]			120 3/4 [306.7]	
9RL9	9TL9	125 5/8 [319.1]		127 1/8 [322.9]			127 1/2 [323.9]	
10RL8	10TL8	132 1/4 [335.9]		133 3/4 [339.7]			134 1/8 [340.7]	
10RL9	10TL9	139 3/4 [355.0]		141 1/4 [358.8]			141 5/8 [359.7]	

**Minimum allowable Gagecock Vessel C-C is determined by assembly clearance required between upper and lower gagecocks.
**Minimum Gagecock Vessel C-C for specified Gage Model with the following gagecocks:
120/220 = 4 1/2 [11.4]
130 = 9 [22.9]
230 = 10 [25.4]

If you know your vessel center to center dimension then:

1. Find the dimension column that matches your gage connection size and type (example: 1/2" NPT Female union connections)
2. Follow that column down to the dimension closest to your required center to center dimension without exceeding that dimension.
3. Take that dimension and the row back to the left to the GAGE MODEL NUMBER column of the style of gage required.
   This represents the largest size gage that meets the required center to center dimension.

If you know the gage model number then:

1. Find your model gage under the GAGE MODEL NUMBER column.
2. Follow that row to the right to the dimension column that matches your gage size and type of gage connections (example: 1/2" NPT Female union connections)
3. This represents the minimum required vessel centers for the model of gage selected.

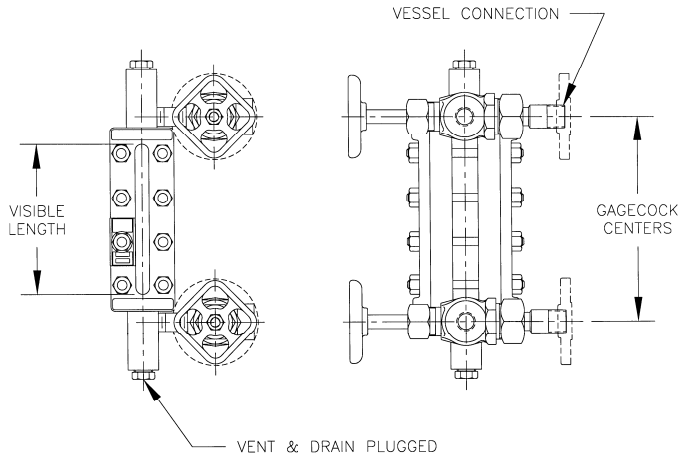

MODEL 130 GAGECOCK SHOWN

© 2009 Tyco Valves & Controls, L.P. Prophetstown, All Rights Reserved

PENBERTHY dimensions

Section 2000
Dimensions 2704.2
Issued 04/09
Replaces 01/09

For: MINIMUM GAGECOCK CENTERS

Series L Gages with Series 300 or 400 Gagecocks

FOR SIDE CONNECTED GAGES ONLY

GAGE MODEL NUMBER		Visible Glass in Inches & [cm]	MINIMUM GAGECOCK VESSEL CENTERS IN INCHES & [CM]					
			1/2" NPT GAGE CONNECTION			3/4" NPT GAGE CONNECTION		
Reflex	Transparent		Standard Female Union 320 or 420 Gagecock with Nipples	Optional Male Union 320 or 420 Gagecock	Standard Female Rigid 330 or 430 Gagecock with Nipples	Optional Female Union 320 or 420 Gagecock with Nipples	Optional Male Union 320 or 420 Gagecock	Optional Female Rigid 330 or 430 Gagecock with Nipples
RL	TL							
1RL1	1TL1	3 3/4 [9.5]	Not Available			Not Available		
1RL2	1TL2	4 3/4 [12.1]	4 3/4 [12.1]**			5 1/8 [13.0]**		
1RL3	1TL3	5 3/4 [14.6]	5 3/4 [14.6]**			6 1/8 [15.6]**		
1RL4	1TL4	6 3/4 [17.1]	6 3/4 [17.1]**			7 1/8 [18.1]**		
1RL5	1TL5	7 7/8 [20.0]	7 7/8 [20.0]**			8 1/4 [21.0]**		
1RL6	1TL6	9 1/8 [23.2]	9 1/8 [23.2]**			9 1/2 [24.1]**		
1RL7	1TL7	10 1/4 [26.0]	10 1/4 [26.0]			10 5/8 [27.0]		
1RL8	1TL8	11 7/8 [30.2]	11 7/8 [30.2]			12 1/4 [31.1]		
1RL9	1TL9	12 5/8 [32.1]	12 5/8 [32.1]			13 [33.0]		
2RL4	2TL4	15 [38.1]	15 [38.1]			15 3/8 [39.1]		
2RL5	2TL5	17 1/4 [43.8]	17 1/4 [43.8]			17 5/8 [44.8]		
2RL6	2TL6	19 3/4 [50.2]	19 3/4 [50.2]			20 1/8 [51.1]		
2RL7	2TL7	22 [55.9]	22 [55.9]			22 3/8 [56.8]		
2RL8	2TL8	25 1/4 [64.1]	25 1/4 [64.1]			25 5/8 [65.1]		
2RL9	2TL9	26 3/4 [67.9]	26 3/4 [67.9]			27 1/8 [68.9]		
3RL6	3TL6	30 3/8 [77.2]	30 3/8 [77.2]			30 3/4 [78.1]		
3RL7	3TL7	33 3/4 [85.7]	33 3/4 [85.7]			34 1/8 [86.7]		
3RL8	3TL8	38 5/8 [98.1]	38 5/8 [98.1]			39 [99.1]		
3RL9	3TL9	40 7/8 [103.8]	40 7/8 [103.8]			41 1/4 [104.8]		
4RL7	4TL7	45 1/2 [115.6]	45 1/2 [115.6]			45 7/8 [116.5]		
4RL8	4TL8	52 [132.1]	52 [132.1]			52 3/8 [133.0]		
4RL9	4TL9	55 [139.7]	55 [139.7]			55 3/8 [140.7]		
5RL7	5TL7	57 1/4 [145.4]	57 1/4 [145.4]			57 5/8 [146.4]		
5RL8	5TL8	65 3/8 [166.1]	65 3/8 [166.1]			65 3/4 [167.0]		
5RL9	5TL9	69 1/8 [175.6]	69 1/8 [175.6]			69 1/2 [176.5]		
6RL8	6TL8	78 3/4 [200.0]	78 3/4 [200.0]			79 1/8 [201.0]		
6RL9	6TL9	83 1/4 [211.5]	83 1/4 [211.5]			83 5/8 [212.4]		
7RL8	7TL8	92 1/8 [234.0]	92 1/8 [234.0]			92 1/2 [235.0]		
7RL9	7TL9	97 3/8 [247.3]	97 3/8 [247.3]			97 3/4 [248.3]		
8RL8	8TL8	105 1/2 [268.0]	105 1/2 [268.0]			105 7/8 [268.9]		
8RL9	8TL9	111 1/2 [283.2]	111 1/2 [283.2]			111 7/8 [284.2]		
9RL8	9TL8	118 7/8 [301.9]	118 7/8 [301.9]			119 1/4 [302.9]		
9RL9	9TL9	125 5/8 [319.1]	125 5/8 [319.1]			126 [320.0]		
10RL8	10TL8	132 1/4 [335.9]	132 1/4 [335.9]			132 5/8 [336.9]		
10RL9	10TL9	139 3/4 [355.0]	139 3/4 [355.0]			140 1/8 [355.9]		

**Minimum allowable Gagecock Vessel C-C is determined by assembly clearance required between upper and lower gagecocks.
**Minimum Gagecock Vessel C-C for specified Gage Model with the following gagecocks:
320/420 = 4 1/2 [11.4]
330 = 9 [22.9]
430 = 10 [25.4]

If you know your vessel center to center dimension then:

1. Find the dimension column that matches your gage connection size and type (example: 1/2" NPT Female union connections)
2. Follow that column down to the dimension closest to your required center to center dimension without exceeding that dimension.
3. Take that dimension and the row back to the left to the GAGE MODEL NUMBER column of the style of gage required.
   This represents the largest size gage that meets the required center to center dimension.

If you know the gage model number then:

1. Find your model gage under the GAGE MODEL NUMBER column.
2. Follow that row to the right to the dimension column that matches your gage size and type of gage connections (example: 1/2" NPT Female union connections)
3. This represents the minimum required vessel centers for the model of gage selected.

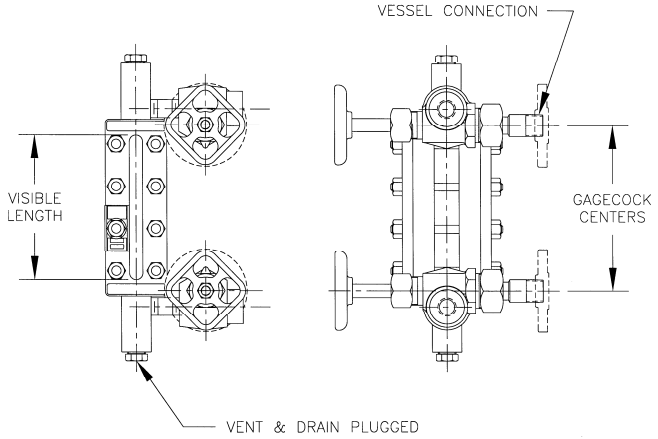

MODEL 330 GAGECOCK SHOWN

© 2009 Tyco Valves & Controls, L.P. Prophetstown, All Rights Reserved

PENBERTHY dimensions

Section 2000
Dimensions 2704.3
Issued 04/09
Replaces 01/09

For: MINIMUM GAGECOCK CENTERS

Series M or H Gages with Series 100 or 200 Gagecocks

FOR SIDE CONNECTED GAGES ONLY

GAGE MODEL NUMBER				Visible Glass in inches & [cm]	MINIMUM GAGECOCK VESSEL CENTERS IN INCHES & [CM]					
					1/2" NPT GAGE CONNECTION			3/4" NPT GAGE CONNECTION		
Reflex		Transparent			Standard Female Union 120 or 220 Gagecock with Nipples	Optional Male Union 120 or 220 Gagecock	Standard Female Rigid 130 or 230 Gagecock with Nipples	Optional Female Union 120 or 220 Gagecock with Nipples	Optional Male Union 120 or 220 Gagecock	Optional Female Rigid 130 or 230 Gagecock with Nipples
RM	RH	TM	TH							
1RM1		1TM1		3 3/4 [9.5]		4 3/4 [12.1]**			5 1/4 [13.3]**	
1RM2		1TM2		4 3/4 [12.1]		5 3/4 [14.6]**			6 1/4 [15.9]**	
1RM3		1TM3		5 3/4 [14.6]		6 3/4 [17.1]**			7 1/4 [18.4]**	
1RM4	1RH4	1TM4	1TH4	6 3/4 [17.1]		7 3/4 [19.7]**			8 1/4 [21.0]**	
1RM5	1RH5	1TM5	1TH5	7 7/8 [20.0]		8 7/8 [22.5]**			9 3/8 [23.8]**	
1RM6	1RH6	1TM6	1TH6	9 1/8 [23.2]		10 1/8 [25.7]			10 5/8 [27.0]	
1RM7	1RH7	1TM7	1TH7	10 1/4 [26.0]		11 1/4 [29.6]			11 3/4 [29.8]	
1RM8	1RH8	1TM8	1TH8	11 7/8 [30.2]		12 7/8 [32.7]			13 3/8 [34.0]	
1RM9	1RH9	1TM9	1TH9	12 5/8 [32.1]		13 5/8 [34.6]			14 1/8 [35.9]	
2RM4	2RH4	2TM4	2TH4	15 [38.1]		16 [40.6]			16 1/2 [41.9]	
2RM5	2RH5	2TM5	2TH5	17 1/4 [43.8]		18 1/4 [46.4]			18 3/4 [47.6]	
2RM6	2RH6	2TM6	2TH6	19 3/4 [50.2]		20 3/4 [52.7]			21 1/4 [54.0]	
2RM7	2RH7	2TM7	2TH7	22 [55.9]		23 [58.4]			23 1/2 [59.7]	
2RM8	2RH8	2TM8	2TH8	25 1/4 [64.1]		26 1/4 [66.7]			26 3/4 [67.9]	
2RM9	2RH9	2TM9	2TH9	26 3/4 [67.9]		27 3/4 [70.5]			28 1/4 [71.8]	
3RM6	3RH6	3TM6	3TH6	30 3/8 [77.2]		31 3/8 [79.7]			31 7/8 [81.0]	
3RM7	3RH7	3TM7	3TH7	33 3/4 [85.7]		34 3/4 [88.3]			35 1/4 [89.5]	
3RM8	3RH8	3TM8	3TH8	38 5/8 [98.1]		39 5/8 [100.6]			40 1/8 [101.9]	
3RM9	3RH9	3TM9	3TH9	40 7/8 [103.8]		41 7/8 [106.4]			42 3/8 [107.6]	
4RM7	4RH7	4TM7	4TH7	45 1/2 [115.6]		46 1/2 [118.1]			47 [119.4]	
4RM8	4RH8	4TM8	4TH8	52 [132.1]		53 [134.6]			53 1/2 [135.9]	
4RM9	4RH9	4TM9	4TH9	55 [139.7]		56 [142.2]			56 1/2 [143.5]	
5RM7	5RH7	5TM7	5TH7	57 1/4 [145.4]		58 1/4 [148.0]			58 3/4 [149.2]	
5RM8	5RH8	5TM8	5TH8	65 3/8 [166.1]		66 3/8 [168.6]			66 7/8 [169.9]	
5RM9	5RH9	5TM9	5TH9	69 1/8 [175.6]		70 1/8 [178.1]			70 5/8 [179.4]	
6RM8	6RH8	6TM8	6TH8	78 3/4 [200.0]		79 3/4 [202.6]			80 1/4 [203.8]	
6RM9	6RH9	6TM9	6TH9	83 1/4 [211.5]		84 1/4 [214.0]			84 3/4 [215.3]	
7RM8	7RH8	7TM8	7TH8	92 1/8 [234.0]		93 1/8 [236.5]			93 5/8 [237.8]	
7RM9	7RH9	7TM9	7TH9	97 3/8 [247.3]		98 3/8 [249.9]			98 7/8 [251.1]	
8RM8	8RH8	8TM8	8TH8	105 1/2 [268.0]		106 1/2 [270.5]			107 [271.8]	
8RM9	8RH9	8TM9	8TH9	111 1/2 [283.2]		112 1/2 [285.8]			113 [287.0]	
9RM8	9RH8	9TM8	9TH8	118 7/8 [301.9]		119 7/8 [304.5]			120 3/8 [305.8]	
9RM9	9RH9	9TM9	9TH9	125 5/8 [319.1]		126 5/8 [321.6]			127 1/8 [322.9]	
10RM8	10RH8	10TM8	10TH8	132 1/4 [335.9]		133 1/4 [338.5]			133 3/4 [339.7]	
10RM9	10RH9	10TM9	10TH9	139 3/4 [355.0]		140 3/4 [357.5]			141 1/4 [358.8]	

**Minimum allowable Gagecock Vessel C-C is determined by assembly clearance required between upper and lower gagecocks.
**Minimum Gagecock Vessel C-C for specified Gage Model with the following gagecocks:
120/220 = 4 1/2 [11.4]
130 = 9 [22.9]
230 = 10 [25.4]

If you know your vessel center to center dimension then:

1. Find the dimension column that matches your gage connection size and type (example: 1/2" NPT Female union connections)
2. Follow that column down to the dimension closest to your required center to center dimension without exceeding that dimension.
3. Take that dimension and the row back to the left to the GAGE MODEL NUMBER column of the style of gage required.
   This represents the largest size gage that meets the required center to center dimension.

If you know the gage model number then:

1. Find your model gage under the GAGE MODEL NUMBER column.
2. Follow that row to the right to the dimension column that matches your gage size and type of gage connections (example: 1/2" NPT Female union connections)
3. This represents the minimum required vessel centers for the model of gage selected.

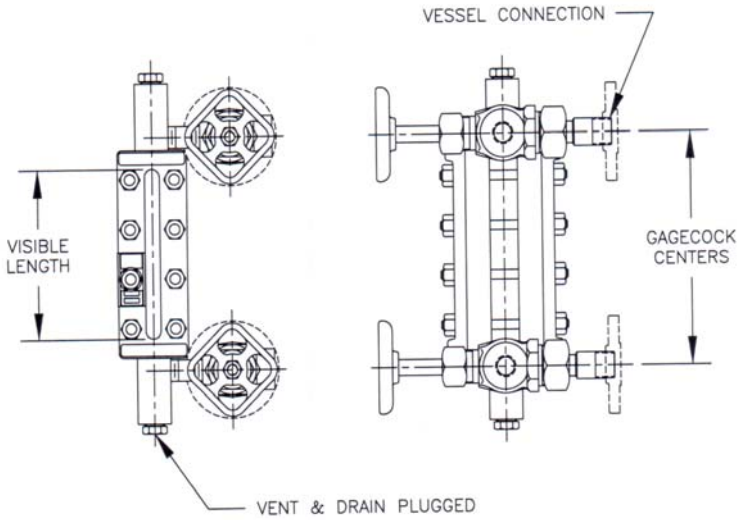

MODEL 130 GAGECOCK SHOWN

© 2009 Tyco Valves & Controls, L.P. Prophetstown, All Rights Reserved

PENBERTHY dimensions

Section 2000
Dimensions 2704.4
Issued 04/09
Replaces 01/09

For: MINIMUM GAGECOCK CENTERS

Series M or H Gages with Series 300 or 400 Gagecocks

FOR SIDE CONNECTED GAGES ONLY

GAGE MODEL NUMBER				Visible Glass inches & [cm]	MINIMUM GAGECOCK VESSEL CENTERS IN INCHES & [CM]					
					1/2" NPT GAGE CONNECTION			3/4" NPT GAGE CONNECTION		
Reflex		Transparent			Standard Female Union 320 or 420 Gagecock with Nipples	Optional Male Union 320 or 420 Gagecock	Standard Female Rigid 330 or 430 Gagecock with Nipples	Optional Female Union 320 or 420 Gagecock with Nipples	Optional Male Union 320 or 420 Gagecock	Optional Female Rigid 330 or 430 Gagecock with Nipples
RM	RH	TM	TH							
1RM1		1TM1		3 3/4 [9.5]	Not Available			Not Available		
1RM2		1TM2		4 3/4 [12.1]	Not Available			4 3/4 [12.1]**		
1RM3		1TM3		5 3/4 [14.6]	5 1/4 [13.3]**			5 3/4 [14.6]**		
1RM4	1RH4	1TM4	1TH4	6 3/4 [17.1]	6 1/4 [15.9]**			6 3/4 [17.1]**		
1RM5	1RH5	1TM5	1TH5	7 7/8 [20.0]	7 3/8 [18.7]**			7 7/8 [20.0]**		
1RM6	1RH6	1TM6	1TH6	9 1/8 [23.2]	8 5/8 [21.9]**			9 1/8 [23.2]**		
1RM7	1RH7	1TM7	1TH7	10 1/4 [26.0]	9 3/4 [24.8]**			10 1/4 [26.0]		
1RM8	1RH8	1TM8	1TH8	11 7/8 [30.2]	11 3/8 [28.9]			11 7/8 [30.2]		
1RM9	1RH9	1TM9	1TH9	12 5/8 [32.1]	12 1/8 [30.8]			12 5/8 [32.1]		
2RM4	2RH4	2TM4	2TH4	15 [38.1]	14 1/2 [36.8]			15 [38.1]		
2RM5	2RH5	2TM5	2TH5	17 1/4 [43.8]	16 3/4 [42.5]			17 1/4 [43.8]		
2RM6	2RH6	2TM6	2TH6	19 3/4 [50.2]	19 1/4 [48.9]			19 3/4 [50.2]		
2RM7	2RH7	2TM7	2TH7	22 [55.9]	21 1/2 [54.6]			22 [55.9]		
2RM8	2RH8	2TM8	2TH8	25 1/4 [64.1]	24 3/4 [62.9]			25 1/4 [64.1]		
2RM9	2RH9	2TM9	2TH9	26 3/4 [67.9]	26 1/4 [66.7]			26 3/4 [67.9]		
3RM6	3RH6	3TM6	3TH6	30 3/8 [77.2]	29 7/8 [75.9]			30 3/8 [77.2]		
3RM7	3RH7	3TM7	3TH7	33 3/4 [85.7]	33 1/4 [84.5]			33 3/4 [85.7]		
3RM8	3RH8	3TM8	3TH8	38 5/8 [98.1]	38 1/8 [96.8]			38 5/8 [98.1]		
3RM9	3RH9	3TM9	3TH9	40 7/8 [103.8]	40 3/8 [102.6]			40 7/8 [103.8]		
4RM7	4RH7	4TM7	4TH7	45 1/2 [115.6]	45 [114.3]			45 1/2 [115.6]		
4RM8	4RH8	4TM8	4TH8	52 [132.1]	51 1/2 [130.8]			52 [132.1]		
4RM9	4RH9	4TM9	4TH9	55 [139.7]	54 1/2 [138.4]			55 [139.7]		
5RM7	5RH7	5TM7	5TH7	57 1/4 [145.4]	56 3/4 [144.1]			57 1/4 [145.4]		
5RM8	5RH8	5TM8	5TH8	65 3/8 [166.1]	64 7/8 [164.8]			65 3/8 [166.1]		
5RM9	5RH9	5TM9	5TH9	69 1/8 [175.6]	68 5/8 [174.3]			69 1/8 [175.6]		
6RM8	6RH8	6TM8	6TH8	78 3/4 [200.0]	78 1/4 [198.8]			78 3/4 [200.0]		
6RM9	6RH9	6TM9	6TH9	83 1/4 [211.5]	82 3/4 [210.2]			83 1/4 [211.5]		
7RM8	7RH8	7TM8	7TH8	92 1/8 [234.0]	91 5/8 [232.7]			92 1/8 [234.0]		
7RM9	7RH9	7TM9	7TH9	97 3/8 [247.3]	96 7/8 [246.1]			97 3/8 [247.3]		
8RM8	8RH8	8TM8	8TH8	105 1/2 [268.0]	105 [266.7]			105 1/2 [268.0]		
8RM9	8RH9	8TM9	8TH9	111 1/2 [283.2]	111 [281.9]			111 1/2 [283.2]		
9RM8	9RH8	9TM8	9TH8	118 7/8 [301.9]	118 3/8 [300.7]			118 7/8 [301.9]		
9RM9	9RH9	9TM9	9TH9	125 5/8 [319.1]	125 1/8 [317.8]			125 5/8 [319.1]		
10RM8	10RH8	10TM8	10TH8	132 1/4 [335.9]	131 3/4 [334.6]			132 1/4 [335.9]		
10RM9	10RH9	10TM9	10TH9	139 3/4 [355.0]	139 1/4 [353.7]			139 3/4 [355.0]		

**Minimum allowable Gagecock Vessel C-C is determined by assembly clearance required between upper and lower gagecocks.
**Minimum Gagecock Vessel C-C for specified Gage Model with the following gagecocks:
320/420 = 4 1/2 [11.4]
330 = 9 [22.9]
430 = 10 [25.4]

If you know your vessel center to center dimension then:

1. Find the dimension column that matches your gage connection size and type (example: 1/2" NPT Female union connections)
2. Follow that column down to the dimension closest to your required center to center dimension without exceeding that dimension.
3. Take that dimension and the row back to the left to the GAGE MODEL NUMBER column of the style of gage required.
   This represents the largest size gage that meets the required center to center dimension.

If you know the gage model number then:

1. Find your model gage under the GAGE MODEL NUMBER column.
2. Follow that row to the right to the dimension column that matches your gage size and type of gage connections (example: 1/2" NPT Female union connections)
3. This represents the minimum required vessel centers for the model of gage selected.

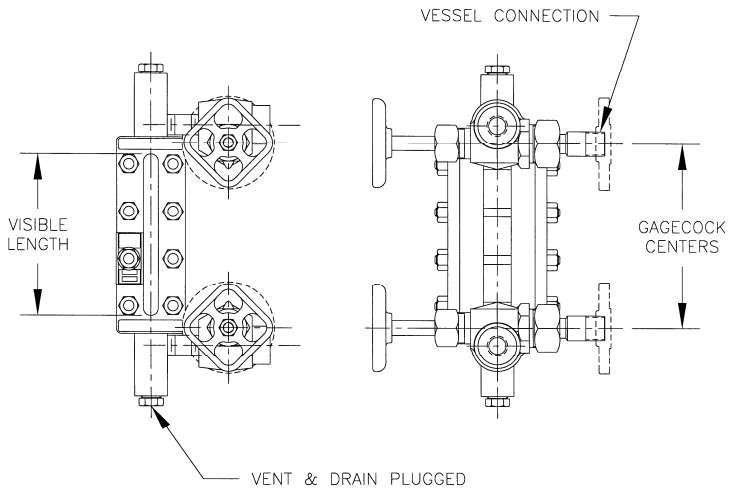

MODEL 330 GAGECOCK SHOWN

© 2009 Tyco Valves & Controls, L.P. Prophetstown, All Rights Reserved

PENBERTHY dimensions

Section 2000
Dimensions 2704.5
Issued 04/09
Replaces 01/09

For: MINIMUM GAGECOCK CENTERS

Series LC Gages with Series 100 or 200 Gagecocks

FOR SIDE CONNECTED GAGES ONLY

GAGE MODEL NUMBER		Visible Glass in inches & [cm]	MINIMUM GAGECOCK VESSEL CENTERS IN INCHES & [CM]					
			1/2" NPT GAGE CONNECTION			3/4" NPT GAGE CONNECTION		
Reflex RLC	Transparent TLC		Standard Female Union 120 or 220 Gagecock with Nipples	Optional Male Union 120 or 220 Gagecock	Standard Female Rigid 130 or 230 Gagecock with Nipples	Optional Female Union 120 or 220 Gagecock with Nipples	Optional Male Union 120 or 220 Gagecock	Optional Female Rigid 130 or 230 Gagecock with Nipples
1RLC4	1TLC4	6 3/4 [17.1]	8 1/4 [21.0]**			8 1/4 [21.0]**		
1RLC5	1TLC5	7 7/8 [20.0]	9 3/8 [23.8]**			9 3/8 [23.8]**		
1RLC6	1TLC6	9 1/8 [23.2]	10 5/8 [27.0]			10 5/8 [27.0]		
1RLC7	1TLC7	10 1/4 [26.0]	11 3/4 [29.8]			11 3/4 [29.8]		
1RLC8	1TLC8	11 7/8 [30.2]	13 3/8 [34.0]			13 3/8 [34.0]		
1RLC9	1TLC9	12 5/8 [32.1]	14 1/8 [35.9]			14 1/8 [35.9]		
2RLC4	2TLC4	15 [38.1]	16 1/2 [41.9]			16 1/2 [41.9]		
2RLC5	2TLC5	17 1/4 [43.8]	18 3/4 [47.6]			18 3/4 [47.6]		
2RLC6	2TLC6	19 3/4 [50.2]	21 1/4 [54.0]			21 1/4 [54.0]		
2RLC7	2TLC7	22 [55.9]	23 1/2 [59.7]			23 1/2 [59.7]		
2RLC8	2TLC8	25 1/4 [64.1]	26 3/4 [67.9]			26 3/4 [67.9]		
2RLC9	2TLC9	26 3/4 [67.9]	28 1/4 [71.8]			28 1/4 [71.8]		
3RLC6	3TLC6	30 3/8 [77.2]	31 7/8 [81.0]			31 7/8 [81.0]		
3RLC7	3TLC7	33 3/4 [85.7]	35 1/4 [89.5]			35 1/4 [89.5]		
3RLC8	3TLC8	38 5/8 [98.1]	40 1/8 [101.9]			40 1/8 [101.9]		
3RLC9	3TLC9	40 7/8 [103.8]	42 3/8 [107.6]			42 3/8 [107.6]		
4RLC7	4TLC7	45 1/2 [115.6]	47 [119.4]			47 [119.4]		
4RLC8	4TLC8	52 [132.1]	53 1/2 [135.9]			53 1/2 [135.9]		
4RLC9	4TLC9	55 [139.7]	56 1/2 [143.5]			56 1/2 [143.5]		
5RLC7	5TLC7	57 1/4 [145.4]	58 3/4 [149.2]			58 3/4 [149.2]		
5RLC8	5TLC8	65 3/8 [166.1]	66 7/8 [169.9]			66 7/8 [169.9]		
5RLC9	5TLC9	69 1/8 [175.6]	70 5/8 [179.4]			70 5/8 [179.4]		
6RLC8	6TLC8	78 3/4 [200.0]	80 1/4 [203.8]			80 1/4 [203.8]		
6RLC9	6TLC9	83 1/4 [211.5]	84 3/4 [215.3]			84 3/4 [215.3]		
7RLC8	7TLC8	92 1/8 [234.0]	93 5/8 [237.8]			93 5/8 [237.8]		
7RLC9	7TLC9	97 3/8 [247.3]	98 7/8 [251.1]			98 7/8 [251.1]		
8RLC8	8TLC8	105 1/2 [268.0]	107 [271.8]			107 [271.8]		
8RLC9	8TLC9	111 1/2 [283.2]	113 [287.0]			113 [287.0]		
9RLC8	9TLC8	118 7/8 [301.9]	120 3/8 [305.8]			120 3/8 [305.8]		
9RLC9	9TLC9	125 5/8 [319.1]	127 1/8 [322.9]			127 1/8 [322.9]		
10RLC8	10TLC8	132 1/4 [335.9]	133 3/4 [339.7]			133 3/4 [339.7]		
10RLC9	10TLC9	139 3/4 [355.0]	141 1/4 [358.8]			141 1/4 [358.8]		

**Minimum allowable Gagecock Vessel C-C is determined by assembly clearance required between upper and lower gagecocks.
**Minimum Gagecock Vessel C-C for specified Gage Model with the following gagecocks:

120/220 = 4 1/2 [11.4]
130 = 9 [22.9]
230 = 10 [25.4]

If Gagecock vessel center to center dimension is known:

1. Find the dimension column that matches the gage connection size and type (example: 1/2" NPT Female union connections).
2. Follow this column down to the dimension closest to the required gagecock center to center dimension without exceeding that dimension.
3. Take that dimension and follow the row back to the left to the GAGE MODEL NUMBER column of the style of gage required.
   This reflects the largest size gage that meets the required gagecock center to center dimension.

If gage model number is known:

1. Find gage model under the GAGE MODEL NUMBER column.
2. Follow that row to the right until you get to the dimension column matching the gage connection size (example: 1/2" NPT Female union connections).
3. This represents the minimum required gagecock vessel center to center for the model of gage selected.

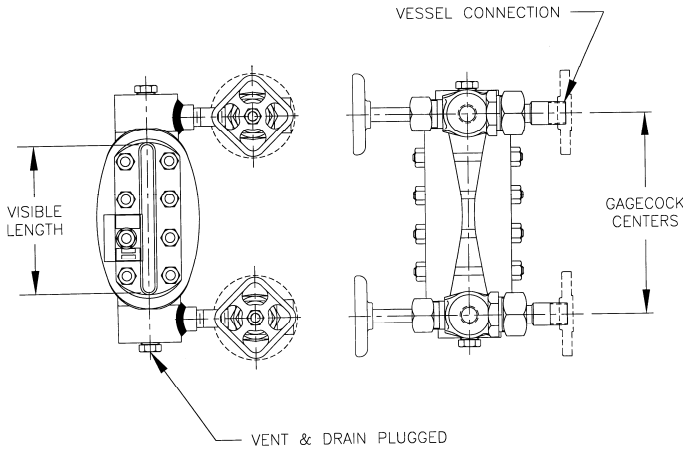

MODEL 130 GAGECOCK SHOWN

© 2009 Tyco Valves & Controls, L.P. Prophetstown, All Rights Reserved

PENBERTHY dimensions

Section 2000
Dimensions 2704.6
Issued 04/09
Replaces 01/09

For: MINIMUM GAGECOCK CENTERS

Series LC Gages with Series 300 or 400 Gagecocks

FOR SIDE CONNECTED GAGES ONLY

GAGE MODEL NUMBER		Visible Glass in inches & [cm]	MINIMUM GAGECOCK VESSEL CENTERS IN INCHES & [CM]					
			1/2" NPT GAGE CONNECTION			3/4" NPT GAGE CONNECTION		
Reflex	Transparent		Standard Female Union 320 or 420 Gagecock with Nipples	Optional Male Union 320 or 420 Gagecock	Standard Female Rigid 330 or 430 Gagecock with Nipples	Optional Female Union 320 or 420 Gagecock with Nipples	Optional Male Union 320 or 420 Gagecock	Optional Female Rigid 330 or 430 Gagecock with Nipples
RLC	TLC							
1RLC4	1TLC4	6 3/4 [17.1]	6 3/4 [17.1]**			6 3/4 [17.1]**		
1RLC5	1TLC5	7 7/8 [20.0]	7 7/8 [20.0]**			7 7/8 [20.0]**		
1RLC6	1TLC6	9 1/8 [23.2]	9 1/8 [23.2]**			9 1/8 [23.2]**		
1RLC7	1TLC7	10 1/4 [26.0]	10 1/4 [26.0]			10 1/4 [26.0]		
1RLC8	1TLC8	11 7/8 [30.2]	11 7/8 [30.2]			11 7/8 [30.2]		
1RLC9	1TLC9	12 5/8 [32.1]	12 5/8 [32.1]			12 5/8 [32.1]		
2RLC4	2TLC4	15 [38.1]	15 [38.1]			15 [38.1]		
2RLC5	2TLC5	17 1/4 [43.8]	17 1/4 [43.8]			17 1/4 [43.8]		
2RLC6	2TLC6	19 3/4 [50.2]	19 3/4 [50.2]			19 3/4 [50.2]		
2RLC7	2TLC7	22 [55.9]	22 [55.9]			22 [55.9]		
2RLC8	2TLC8	25 1/4 [64.1]	25 1/4 [64.1]			25 1/4 [64.1]		
2RLC9	2TLC9	26 3/4 [67.9]	26 3/4 [67.9]			26 3/4 [67.9]		
3RLC6	3TLC6	30 3/8 [77.2]	30 3/8 [77.2]			30 3/8 [77.2]		
3RLC7	3TLC7	33 3/4 [85.7]	33 3/4 [85.7]			33 3/4 [85.7]		
3RLC8	3TLC8	38 5/8 [98.1]	38 5/8 [98.1]			38 5/8 [98.1]		
3RLC9	3TLC9	40 7/8 [103.8]	40 7/8 [103.8]			40 7/8 [103.8]		
4RLC7	4TLC7	45 1/2 [115.6]	45 1/2 [115.6]			45 1/2 [115.6]		
4RLC8	4TLC8	52 [132.1]	52 [132.1]			52 [132.1]		
4RLC9	4TLC9	55 [139.7]	55 [139.7]			55 [139.7]		
5RLC7	5TLC7	57 1/4 [145.4]	57 1/4 [145.4]			57 1/4 [145.4]		
5RLC8	5TLC8	65 3/8 [166.1]	65 3/8 [166.1]			65 3/8 [166.1]		
5RLC9	5TLC9	69 1/8 [175.6]	69 1/8 [175.6]			69 1/8 [175.6]		
6RLC8	6TLC8	78 3/4 [200.0]	78 3/4 [200.0]			78 3/4 [200.0]		
6RLC9	6TLC9	83 1/4 [211.5]	83 1/4 [211.5]			83 1/4 [211.5]		
7RLC8	7TLC8	92 1/8 [234.0]	92 1/8 [234.0]			92 1/8 [234.0]		
7RLC9	7TLC9	97 3/8 [247.3]	97 3/8 [247.3]			97 3/8 [247.3]		
8RLC8	8TLC8	105 1/2 [268.0]	105 1/2 [268.0]			105 1/2 [268.0]		
8RLC9	8TLC9	111 1/2 [283.2]	111 1/2 [283.2]			111 1/2 [283.2]		
9RLC8	9TLC8	118 7/8 [301.9]	118 7/8 [301.9]			118 7/8 [301.9]		
9RLC9	9TLC9	125 5/8 [319.1]	125 5/8 [319.1]			125 5/8 [319.1]		
10RLC8	10TLC8	132 1/4 [335.9]	132 1/4 [335.9]			132 1/4 [335.9]		
10RLC9	10TLC9	139 3/4 [355.0]	139 3/4 [355.0]			139 3/4 [355.0]		

**Minimum allowable Gagecock Vessel C-C is determined by assembly clearance required between upper and lower gagecocks.
**Minimum Gagecock Vessel C-C for specified Gage Model with the following gagecocks:

320/420 = 4 1/2 [11.4]
330 = 9 [22.9]
430 = 10 [25.4]

If Gagecock vessel center to center dimension is known:

1. Find the dimension column that matches the gage connection size and type (example: 1/2" NPT Female union connections).
2. Follow this column down to the dimension closest to the required gagecock center to center dimension without exceeding that dimension.
3. Take that dimension and the row back to the left to the GAGE MODEL NUMBER column of the style of gage required.
   This reflects the largest size gage that meets the required gagecock center to center dimension.

If gage model number is known:

1. Find gage model under the GAGE MODEL NUMBER column.
2. Follow that row to the right until you get to the dimension column matching the gage connection size (example: 1/2" NPT Female union connections).
3. This represents the minimum required gagecock vessel center to center for the model of gage selected.

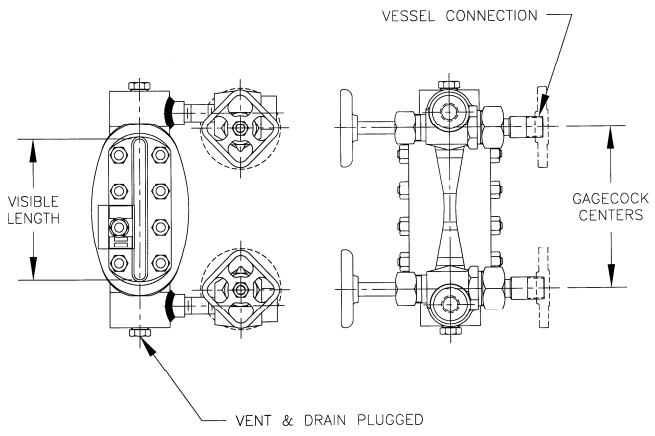

MODEL 330 GAGECOCK SHOWN

© 2009 Tyco Valves & Controls, L.P. Prophetstown, All Rights Reserved

PENBERTHY dimensions

Section 2000
Dimensions 2704.7
Issued 04/09
Replaces 01/09

For: MINIMUM GAGECOCK CENTERS

Series M or H Recessed Gages with Series 100 or 200 Gagecocks

FOR SIDE CONNECTED GAGES ONLY

GAGE MODEL NUMBER				Visible Glass in inches & [cm]	MINIMUM GAGECOCK VESSEL CENTERS IN INCHES & [CM]					
					1/2" NPT GAGE CONNECTION			3/4" NPT GAGE CONNECTION		
Reflex		Transparent			Standard Female Union 120 or 220 Gagecock with Nipples	Optional Male Union 120 or 220 Gagecock	Standard Female Rigid 130 or 230 Gagecock with Nipples	Optional Female Union 120 or 220 Gagecock with Nipples	Optional Male Union 120 or 220 Gagecock	Optional Female Rigid 130 or 230 Gagecock with Nipples
RMR	RHR	TMR	THR							
1RMR1		1TMR1		3 3/4 [9.5]		5 1/4 [13.3]**			5 1/2 [14.0]**	
1RMR2		1TMR2		4 3/4 [12.1]		6 1/4 [15.9]**			6 1/2 [16.5]**	
1RMR3		1TMR3		5 3/4 [14.6]		7 1/4 [18.4]**			7 1/2 [19.1]**	
1RMR4	1RHR4	1TMR4	1THR4	6 3/4 [17.1]		8 1/4 [21.0]**			8 1/2 [21.6]**	
1RMR5	1RHR5	1TMR5	1THR5	7 7/8 [20.0]		9 3/8 [23.8]**			9 5/8 [24.5]**	
1RMR6	1RHR6	1TMR6	1THR6	9 1/8 [23.2]		10 5/8 [27.0			10 7/8 [27.6]	
1RMR7	1RHR7	1TMR7	1THR7	10 1/4 [26.0]		11 3/4 [29.8]			12 [30.5]	
1RMR8	1RHR8	1TMR8	1THR8	11 7/8 [30.2]		13 3/8 [34.0]			13 5/8 [34.6]	
1RMR9	1RHR9	1TMR9	1THR9	12 5/8 [32.1]		14 1/8 [35.9]			14 3/8 [36.5]	
2RMR4	2RHR4	2TMR4	2THR4	15 [38.1]		16 1/2 [41.9]			16 3/4 [42.6]	
2RMR5	2RHR5	2TMR5	2THR5	17 1/4 [43.8]		18 3/4 [47.6]			19 [48.3]	
2RMR6	2RHR6	2TMR6	2THR6	19 3/4 [50.2]		21 1/4 [54.0			21 1/2 [54.6]	
2RMR7	2RHR7	2TMR7	2THR7	22 [55.9]		23 1/2 [59.7]			23 3/4 [60.3]	
2RMR8	2RHR8	2TMR8	2THR8	25 1/4 [64.1]		26 3/4 [67.9]			27 [68.6]	
2RMR9	2RHR9	2TMR9	2THR9	26 3/4 [67.9]		28 1/4 [71.8]			28 1/2 [72.4]	
3RMR6	3RHR6	3TMR6	3THR6	30 3/8 [77.2]		31 7/8 [81.0]			32 1/8 [81.6]	
3RMR7	3RHR7	3TMR7	3THR7	33 3/4 [85.7]		35 1/4 [89.5]			35 1/2 [90.2]	
3RMR8	3RHR8	3TMR8	3THR8	38 5/8 [98.1]		40 1/8 [101.9]			40 3/8 [102.6]	
3RMR9	3RHR9	3TMR9	3THR9	40 7/8 [103.8]		42 3/8 [107.6]			42 5/8 [108.3]	
4RMR7	4RHR7	4TMR7	4THR7	45 1/2 [115.6]		47 [119.4]			47 1/4 [120.6]	
4RMR8	4RHR8	4TMR8	4THR8	52 [132.1]		53 1/2 [135.9]			53 3/4 [136.5]	
4RMR9	4RHR9	4TMR9	4THR9	55 [139.7]		56 1/2 [146.5]			56 3/4 [144.2]	
5RMR7	5RHR7	5TMR7	5THR7	57 1/4 [145.4]		58 3/4 [149.2]			59 [149.9]	
5RMR8	5RHR8	5TMR8	5THR8	65 3/8 [166.1]		66 7/8 [169.9]			67 1/8 [170.5]	
5RMR9	5RHR9	5TMR9	5THR9	69 1/8 [175.6]		70 5/8 [179.4]			70 7/8 [180.0]	
6RMR8	6RHR8	6TMR8	6THR8	78 3/4 [200.0]		80 1/4 [203.8]			80 1/2 [204.5]	
6RMR9	6RHR9	6TMR9	6THR9	83 1/4 [211.5]		84 3/4 [215.3]			85 [215.9]	
7RMR8	7RHR8	7TMR8	7THR8	92 1/8 [234.0]		93 5/8 [237.8]			93 7/8 [238.5]	
7RMR9	7RHR9	7TMR9	7THR9	97 3/8 [247.3]		98 7/8 [251.1]			99 1/8 [251.8]	
8RMR8	8RHR8	8TMR8	8THR8	105 1/2 [268.0]		107 [271.8]			107 1/4 [272.4]	
8RMR9	8RHR9	8TMR9	8THR9	111 1/2 [283.2]		113 [287.0]			113 1/4 [287.7]	
9RMR8	9RHR8	9TMR8	9THR8	118 7/8 [301.9]		120 3/8 [305.8]			120 5/8 [306.4]	
9RMR9	9RHR9	9TMR9	9THR9	125 5/8 [319.1]		127 1/8 [322.9]			127 3/8 [323.6]	
10RMR8	10RHR8	10TMR8	10THR8	132 1/4 [335.9]		133 3/4 [339.7]			134 [340.4]	
10RMR9	10RHR9	10TMR9	10THR9	139 3/4 [355.0]		141 1/4 [358.8]			141 1/2 [359.4]	

**Minimum allowable Gagecock Vessel C-C is determined by assembly clearance required between upper and lower gagecocks.
**Minimum Gagecock Vessel C-C for specified Gage Model with the following gagecocks:
120/220 = 4 1/2 [11.4]
130 = 9 [22.9]
230 = 10 [25.4]

If you know your vessel center to center dimension then:

1. Find the dimension column that matches your gage connection size and type (example: 1/2" NPT Female union connections)
2. Follow that column down to the dimension closest to your required center to center dimension without exceeding that dimension.
3. Take that dimension and the row back to the left to the GAGE MODEL NUMBER column of the style of gage required.
   This represents the largest size gage that meets the required center to center dimension.

If you know the gage model number then:

1. Find your model gage under the GAGE MODEL NUMBER column.
2. Follow that row to the right to the dimension column that matches your gage size and type of gage connections (example: 1/2" NPT Female union connections)
3. This represents the minimum required vessel centers for the model of gage selected.

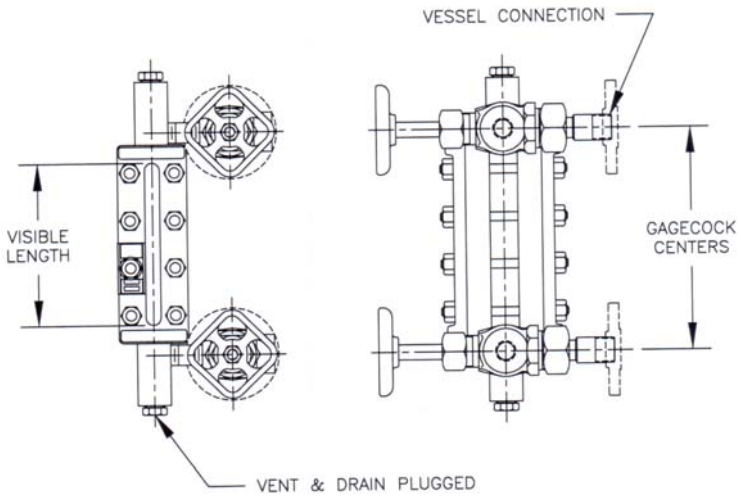

MODEL 130 GAGECOCK SHOWN

© 2009 Tyco Valves & Controls, L.P. Prophetstown, All Rights Reserved

PENBERTHY dimensions

Section 2000
Dimensions 2704.8
Issued 04/09
Replaces 01/09

For: **MINIMUM GAGECOCK CENTERS** **Series M or H Recessed Gages with Series 300 or 400**

FOR SIDE CONNECTED GAGES ONLY

GAGE MODEL NUMBER				Visible Glass inches & [cm]	MINIMUM GAGECOCK VESSEL CENTERS IN INCHES & [CM]					
					1/2" NPT GAGE CONNECTION			3/4" NPT GAGE CONNECTION		
Reflex		Transparent			Standard Female Union 320 or 420 Gagecock with Nipples	Optional Male Union 320 or 420 Gagecock	Standard Female Rigid 330 or 430 Gagecock with Nipples	Optional Female Union 320 or 420 Gagecock with Nipples	Optional Male Union 320 or 420 Gagecock	Optional Female Rigid 330 or 430 Gagecock with Nipples
RMR	RHR	TMR	THR							
1RMR1		1TMR1		3 3/4 [9.5]	Not Available			Not Available		
1RMR2		1TMR2		4 3/4 [12.1]	4 3/4 [12.1]**			5 [12.7]**		
1RMR3		1TMR3		5 3/4 [14.6]	5 3/4 [14.6]**			6 [15.2]**		
1RMR4	1RHR4	1TMR4	1THR4	6 3/4 [17.1]	6 3/4 [17.1]**			7 [17.8]**		
1RMR5	1RHR5	1TMR5	1THR5	7 7/8 [20.0]	7 7/8 [20.0]**			8 1/8 [20.7]**		
1RMR6	1RHR6	1TMR6	1THR6	9 1/8 [23.2]	9 1/8 [23.2]**			9 3/8 [23.8]**		
1RMR7	1RHR7	1TMR7	1THR7	10 1/4 [26.0]	10 1/4 [26.0]**			10 1/2 [26.0]		
1RMR8	1RHR8	1TMR8	1THR8	11 7/8 [30.2]	11 7/8 [30.2]			12 1/8 [30.8]		
1RMR9	1RHR9	1TMR9	1THR9	12 5/8 [32.1]	12 5/8 [32.1]			12 7/8 [32.7]		
2RMR4	2RHR4	2TMR4	2THR4	15 [38.1]	15 [38.1]			15 1/4 [38.7]		
2RMR5	2RHR5	2TMR5	2THR5	17 1/4 [43.8]	17 1/4 [43.8]			17 1/2 [44.5]		
2RMR6	2RHR6	2TMR6	2THR6	19 3/4 [50.2]	19 3/4 [50.2]			20 [50.8]		
2RMR7	2RHR7	2TMR7	2THR7	22 [55.9]	22 [55.9]			22 1/4 [56.5]		
2RMR8	2RHR8	2TMR8	2THR8	25 1/4 [64.1]	25 1/4 [64.1]			25 1/2 [64.8]		
2RMR9	2RHR9	2TMR9	2THR9	26 3/4 [67.9]	26 3/4 [67.9]			27 [68.6]		
3RMR6	3RHR6	3TMR6	3THR6	30 3/8 [77.2]	30 3/8 [77.2]			30 5/8 [77.8]		
3RMR7	3RHR7	3TMR7	3THR7	33 3/4 [85.7]	33 3/4 [85.7]			34 [86.4]		
3RMR8	3RHR8	3TMR8	3THR8	38 5/8 [98.1]	38 5/8 [98.1]			38 7/8 [98.7]		
3RMR9	3RHR9	3TMR9	3THR9	40 7/8 [103.8]	40 7/8 [103.8]			41 1/8 [104.5]		
4RMR7	4RHR7	4TMR7	4THR7	45 1/2 [115.6]	45 1/2 [115.6]			45 3/4 [116.2]		
4RMR8	4RHR8	4TMR8	4THR8	52 [132.1]	52 [132.1]			52 1/4 [132.7]		
4RMR9	4RHR9	4TMR9	4THR9	55 [139.7]	55 [139.7]			55 1/4 [140.3]		
5RMR7	5RHR7	5TMR7	5THR7	57 1/4 [145.4]	57 1/4 [145.4]			57 1/2 [146.1]		
5RMR8	5RHR8	5TMR8	5THR8	65 3/8 [166.1]	65 3/8 [166.1]			65 5/8 [166.7]		
5RMR9	5RHR9	5TMR9	5THR9	69 1/8 [175.6]	69 1/8 [175.6]			69 3/8 [176.2]		
6RMR8	6RHR8	6TMR8	6THR8	78 3/4 [200.0]	78 3/4 [200.0]			79 [200.7]		
6RMR9	6RHR9	6TMR9	6THR9	83 1/4 [211.5]	83 1/4 [211.5]			83 1/2 [212.1]		
7RMR8	7RHR8	7TMR8	7THR8	92 1/8 [234.0]	92 1/8 [234.0]			92 3/8 [234.6]		
7RMR9	7RHR9	7TMR9	7THR9	97 3/8 [247.3]	97 3/8 [247.3]			97 5/8 [248.0]		
8RMR8	8RHR8	8TMR8	8THR8	105 1/2 [268.0]	105 1/2 [268.0]			105 3/4 [268.6]		
8RMR9	8RHR9	8TMR9	8THR9	111 1/2 [283.2]	111 1/2 [283.2]			111 3/4 [283.8]		
9RMR8	9RHR8	9TMR8	9THR8	118 7/8 [301.9]	118 7/8 [301.9]			119 1/8 [302.6]		
9RMR9	9RHR9	9TMR9	9THR9	125 5/8 [319.1]	125 5/8 [319.1]			125 7/8 [319.7]		
10RMR8	10RHR8	10TMR8	10THR8	132 1/4 [335.9]	132 1/4 [335.9]			132 1/2 [335.9]		
10RMR9	10RHR9	10TMR9	10THR9	139 3/4 [355.0]	139 3/4 [355.0]			140 [355.6]		

**Minimum allowable Gagecock Vessel C-C is determined by assembly clearance required between upper and lower gagecocks.
**Minimum Gagecock Vessel C-C for specified Gage Model with the following gagecocks:
320/420 = 4 1/2 [11.4]
330 = 9 [22.9]
430 = 10 [25.4]

If you know your vessel center to center dimension then:

1. Find the dimension column that matches your gage connection size and type (example: 1/2" NPT Female union connections)
2. Follow that column down to the dimension closest to your required center to center dimension without exceeding that dimension.
3. Take that dimension and the row back to the left to the GAGE MODEL NUMBER column of the style of gage required.
   This represents the largest size gage that meets the required center to center dimension.

If you know the gage model number then:

1. Find your model gage under the GAGE MODEL NUMBER column.
2. Follow that row to the right to the dimension column that matches your gage size and type of gage connections (example: 1/2" NPT Female union connections)
3. This represents the minimum required vessel centers for the model of gage selected.

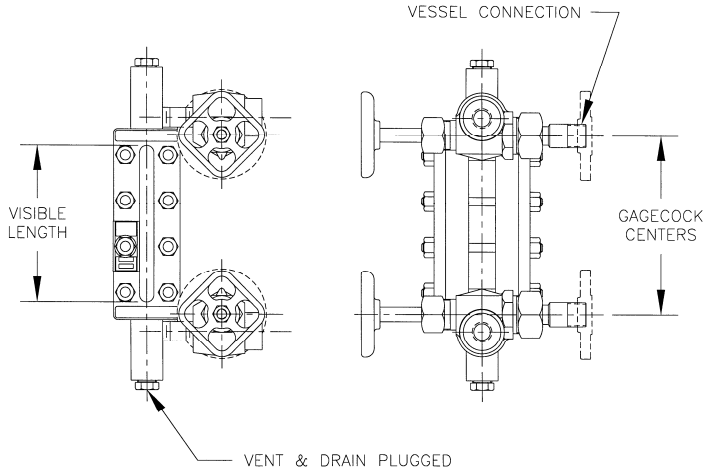

MODEL 330 GAGECOCK SHOWN

© 2009 Tyco Valves & Controls, L.P. Prophetstown, All Rights Reserved

tyco/Flow Control/ Tyco Valves & Controls

Penberthy

Section: 2000
I.O.M.: 2960
Issued: 08/05
Replaces: 04/05

PENBERTHY®

Armored Gagecocks

Series 100, 200, 300 and 400

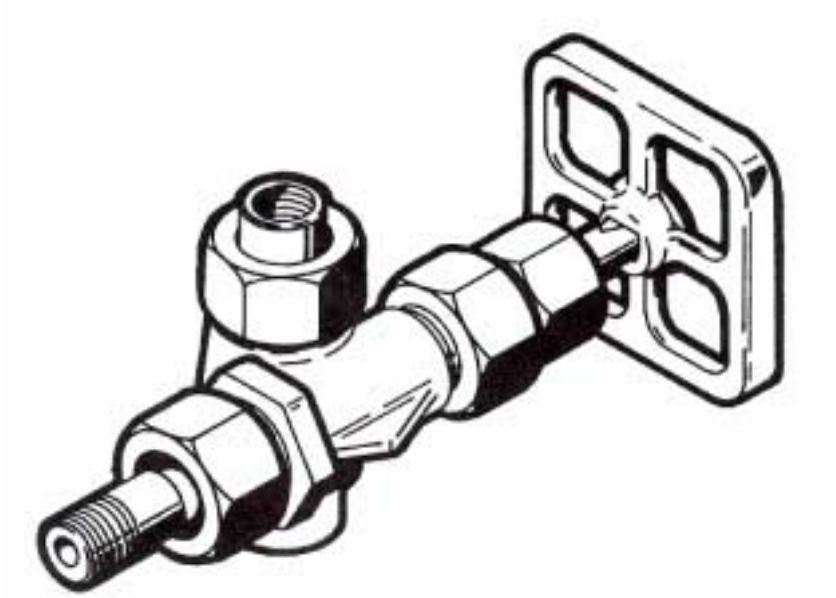

Installation, Operation and Maintenance Instructions

TABLE OF CONTENTS

Product Warranty iii

1.0 About the Manual 1

2.0 Introduction 1
2.1 System Description 2

3.0 Available Models 2,3
3.1 Design Ratings at Max. and Min. Operating Temperatures . . 3
3.2 Steam Application 3

4.0 Inspection 4
4.1 User Rating Inspection 4

5.0 Installation 4
5.1 Piping Strain 4
5.2 Differential Thermal Expansion 4
5.3 Mounting 5

6.0 Operation 5
6.1 Hydrostatic Test 5

7.0 Maintenance 6
7.1 Preventative Maintenance 6
7.2 Ball Check Shut-Off 6,7
7.3 Troubleshooting 7

8.0 Removal - Disassembly and Reassembly 8
8.1 Disassembly 8
8.2 Reassembly 8

9.0 Disposal at End of Useful Life 8

10.0 Telephone Assistance 9

11.0 Exploded Parts Drawing 10

TABLES AND FIGURES **page**

Table 1 Armored Gagecock Standard Features 2
Table 2 Armored Gagecock Standard Features 3
Table 3 Design Ratings for Threaded or Welded Connections . . . 3

Figure 1 Teflon® Tape Wrapping 5
Figure 2 Exploded Parts Drawing 10
Figure 3 Optional Gasket Union Connection 10

PENBERTHY PRODUCT WARRANTY

Tyco Valves & Controls Prophetstown warrants its Penberthy products as designed and manufactured by TV&C Prophetstown to be free of defects in the material and workmanship for a period of one year after the date of installation or eighteen months after the date of manufacture, whichever is earliest. TV&C Prophetstown will, at its option, replace or repair any products which fail during the warranty period due to defective material or workmanship.

Prior to submitting any claim for warranty service, the owner must submit proof of purchase to TV&C Prophetstown and obtain written authorization to return the product. Thereafter, the product shall be returned to TV&C in Prophetstown, Illinois, with freight paid.

This warranty shall not apply if the product has been disassembled, tampered with, repaired or otherwise altered outside of TV&C Prophetstown factory, or if it has been subject to misuse, neglect or accident.

The responsibility of TV&C Prophetstown hereunder is limited to repairing or replacing the product at its expense. TV&C Prophetstown shall not be liable for loss, damage or expenses related directly or indirectly to the installation or use of its products, or from any other cause or for consequential damages. It is expressly understood that TV&C Prophetstown is not responsible for damage or injury caused to other products, buildings, personnel or property, by reason of the installation or use of its products.

THIS IS TV&C PROPHETSTOWN'S SOLE WARRANTY AND IN LIEU OF ALL OTHER WARRANTIES, EXPRESSED OR IMPLIED WHICH ARE HEREBY EXCLUDED, INCLUDING IN PARTICULAR ALL WARRANTIES OF MERCHANTABILITY OR FITNESS FOR A PARTICULAR PURPOSE.

This document and the warranty contained herein may not be modified and no other warranty, expressed or implied, shall be made by or on behalf of TV&C Prophetstown unless made in writing and signed by the General Manager or Director of Engineering of TV&C Prophetstown.

INSTALLATION, OPERATION and MAINTENANCE MANUAL FOR PENBERTHY SERIES 100, 200, 300 and 400 GAGECOCKS

1.0 About the Manual

This manual has been prepared as an aid and guide for personnel involved installation or maintenance. All instructions must be read and understood thoroughly before attempting any installation, operation, or maintenance.

SAFETY INSTRUCTIONS

Penberthy does not have any control over the manner in which its gagecocks are handled, installed or used. Penberthy cannot and will not guarantee that a gagecock is suitable or compatible for the user's specific application.



WARNING

Vessel fluids may be pressurized and can unexpectedly exit vessel connections due to apparatus or material failure. Safety glasses should be worn when installing a gagecock. Failure to follow *any* instruction could possibly result in a malfunction of the gagecock with resulting sudden release of pressure, severe physical injury or property damage.

2.0 Introduction

Penberthy armored gagecocks are used to isolate gage glass, magnetic gages or other apparatus from the holding or pressure vessel when it becomes necessary to drain and service the gage. Penberthy Series 100, 200, 300 and 400 gagecocks are supplied in pairs, (upper and lower), and are available with socketweld, flanged and NPT connections.

These gagecocks are equipped, as a standard feature, with a floating shank union vessel connection, which permits up to 3/8" (10 mm) variation in center to center distance and with ball check shut-offs to prevent leakage of contained fluid in case of accidental gage glass breakage.

Series 100, 200, 300 and 400 gagecocks for process use should include ball check shut-off feature. Gagecocks without the ball check shut-off feature will not automatically stop leakage of contained fluid in the event of accidental gage glass breakage.

2.1 System Description

Penberthy armored gagecocks are comprised of six basic components. Each component may vary slightly, depending on the desired physical and mechanical properties for the gagecock. Use the exploded parts view in Section 11.0 as additional reference material.

Body- a pressure retaining structure through which liquid passes to enter a gage glass or other apparatus. Provides a rigid, union, or spherical union connection to the vessel and seating surfaces for most gagecock components. Series 100 and 200 are straight pattern bodies; Series 300 and 400 are offset pattern bodies.

Ball Checks- sphere installed loosely within the body of the gagecock that seats to prevent significant leakage when a differential pressure surge occurs (e.g., mechanical failure). Ball checks for ASME steam service incorporate a vertically rising lower and leaky horizontal upper or omit ball checks completely. "Reverse acting" ball checks are available for vacuum service.

Trim- wetted parts that mechanically control the liquid path from the vessel to the gage glass or other apparatus. The ball and stem act to seal and release the liquid. In the event of mechanical failure, the ball will seat to prevent large quantities of the contained fluid from exiting the vessel. Liquid is allowed to exit the vessel into the gage glass or other apparatus when the stem is screwed away from its seated position. The liquid is sealed when the stem is screwed into its seated position.

The stem packing retainer provides a compression surface between the process liquid and the stem packing. A stem packing gland is used to compress the packing against the retainer and around the stem to prevent leakage.

Stem Packing- under compression the stem packing is forced to mold around the stem and prevent leakage of media during operation.

Gage Connection- provides connection between the gagecock and the gage glass or other apparatus. A union, spherical union or rigid connection may be used. A union connection can move in a plane parallel to the vessel connection.

Handwheel/Lever- rotated to engage threads and provide screw action of stem.

3.0 Available Models

Armored gagecock standard features are listed in chart below.

Features	Model Number							
	120	130	220	230	320	330	420	430
Straight Pattern	x	x	x	x				
Offset Pattern					x	x	x	x
Integral Bonnet	x	x			x	x		
Union Bonnet			x	x			x	x
Union Gage Connection	x		x		x		x	
Rigid Gage Connection		x		x		x		x
Union Vessel Connection	x	x	x	x	x	x	x	x
Screwed in Seat			x	x			x	x

Table 1

Additional gagecock models are available with gasketed union connections. The gaskets are a spiral wound style, stainless steel/graphite, which are inserted into the body at the union connection to provide a gasketed seal between the body and tailpipe as opposed to the standard metal-to-metal joint. These gaskets provide a seal even with small angular misalignments and with less closure force than the standard metal-to-metal seals.

Features	Model Number															
	121	122	123	131	221	222	223	231	321	322	323	331	421	422	423	431
Straight Pattern	x	x	x	x	x	x	x	x								
Offset Pattern									x	x	x	x	x	x	x	x
Integral Bonnet	x	x	x	x					x	x	x	x				
Union Bonnet					x	x	x	x					x	x	x	x
Metal Union Gage Connection	x				x				x				x			
Rigid Gage Connection				x				x				x				x
Metal Union Vessel Connection		x				x				x				x		
Screwed in Seat					x	x	x	x					x	x	x	x
Gasket Union Gage Connection		x	x			x	x			x	x			x	x	
Gasket Union Vessel Connection	x		x	x	x		x	x	x		x	x	x		x	x

Table 2

3.1 Design Ratings at Maximum and Minimum Operating Temperatures

To determine the maximum allowable working pressure for a specific temperature within the design limits stated below, the user must refer to Penberthy Application Reports, or when provided, the specifically stated design limits on a Penberthy product proposal.

DESIGN RATINGS FOR THREADED OR WELDED CONNECTIONS

Gagecock Series	Material of Construction	Maximum Allowable Working Pressure	
		Teflon® packing	Grafoil® packing
100 200 300 400	Carbon Steel	4000 psig [27580 kPa] at -20°F [-29°C] to +100°F [38°C] 3525 psig [24300 kPa] at 500°F [260°C]	4000 psig [27580 kPa] at -20°F [-29°C] to +100° [38°C] 2620 psig [18060 kPa] at 750°F [399°C]
	316 STS Construction	4000 psig [27580 kPa] at -300°F [-184°C] to +100°F [38°C] 3525 psig [24300 kPa] at 500°F [260°C]	4000 psig [27580 kPa] at -300°F [-184°C] to +100°F [38°C] 2755 psig [18990 kPa] at 750°F [399°C]
	For other materials or connections consult factory		

Table 3



NEVER exceed these design ratings or application data. Exceeding design ratings or application data may result in mechanical failure of gagecock components resulting in serious personal injury or property damage.

3.2 Steam Application

Penberthy series 100, 200, 300 and 400 gagecocks are designed for process conditions. In low pressure steam/water applications (≤ 350 psig [2410 kPa] at 434°F [223°C]), Penberthy allows the use of 300 and 400 series gagecocks because the potential mechanical stress imposed on the gagecock assembly by the thermodynamic steam environment is relatively small. Request Penberthy Application Reports for more detailed information.

4.0 Inspection

Upon receipt of a gagecock set, check all components carefully for damage incurred in shipping. If damage is evident or suspected, do not attempt any installation. Notify carrier immediately and request damage inspection. Refer to exploded view drawing in Section 11.0 to inventory parts.

4.1 User Rating Inspection

The user should confirm that:

1. The gagecock set model number and pressure/temperature rating stamped on nameplate conforms to the description on the user's purchase order
2. The operating conditions described in the purchase order agree with the actual operating conditions at the installation site
3. The actual operating conditions at the installation site are within the application data shown on the Penberthy Technical Data Bulletin or product proposal referred to previously
4. The materials of construction of the gagecock set are compatible with both the contained fluid and the surrounding atmosphere in the specific application.

SAFETY INSTRUCTIONS

If the size, model or performance data of the gagecock set as received does not conform with any of the criteria above, do not proceed with installation. Contact an authorized Penberthy distributor for assistance. The incorrect gagecock can result in unacceptable performance and potential damage to the gage.

5.0 Installation

Installation should only be undertaken by qualified personnel who are familiar with this equipment. They should have read and understood all of the instructions in this manual. The user should refer to Penberthy dimension sheets or Penberthy product proposal to obtain dimensional information for specific size and model gagecock.

Penberthy recommendations on gagecock installations are not necessarily related to the installation of flat glass liquid level gages. The number of different types of gage and gagecock installations is too great to adequately explain in an installation manual. Therefore, it is the user's responsibility to assure that knowledgeable installation personnel plan and carry out the installation in a safe manner. The following procedures are some of the guidelines that should be employed.

5.1 Piping Strain

The gagecock should be mounted and connected so that it can support the gage without binding. Torsional stresses can make it difficult or impossible to seal tailpipes. Although union connections will allow marginal errors in piping alignment, misalignment can still create unusual strain on connectors. Gages not properly supported by brackets may subject the gagecock to stresses that can cause leaks or mechanical failure. Typical gage load should NOT exceed 50 lbs (22.7kg) per gagecock.

5.2 Differential Thermal Expansion

High mechanical loading may be imposed on a gagecock by expanding and contracting gages due to hot or cold service. Such mechanical loads on the gagecock must be minimized by controlling process conditions in the system or by using expansion loops.

5.3 Mounting

1. Prior to installation, turn the handwheel of each gagecock clockwise until the stem closes against the seat.
2. Remove union vessel connections from gagecocks, where applicable, and apply heavy grease (where allowable) to tailpipe seat. (The grease minimizes galling of the seat surfaces when tightening the coupling nuts.)
3. Wrench tighten tailpipes of upper and lower gagecocks to the vessel using Teflon® tape, or equivalent, on all male tapered pipe thread connections as shown in Figure 1. If the gagecock is flanged or weld mount, use proper industry standard procedures.
4. If installing with a flat glass gage, follow all installation instructions for the specific liquid level gage as there are many points to consider on gage installation; among them, piping strain, differential thermal expansion, weight and bolt torque.
5. Install gage tailpipes to union gage connections, where applicable, making sure that the coupling nuts are in place.

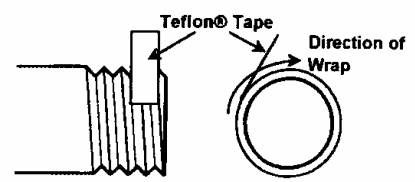

Figure 1

6.0 Operation

Before initializing gagecock operation, check that all installation procedures have been completed. Use only qualified experienced personnel who are familiar with gagecock equipment and thoroughly understand the implications of the tables and all the instructions. Check to determine that all connections are pressure tight.

WARNING

Gagecock installations should be brought into service slowly. Gagecocks should be opened slightly, and the gagecock assembly temperature and pressure allowed to slowly equalize. If the gagecocks are equipped with ball checks, the gagecocks must be opened all the way after the pressure and temperature have equalized to permit operation of the automatic ball check in the event of gage glass failure. Failure to follow the recommended operating procedures can result in severe personal injury or property damage.

6.1 Hydrostatic Test

Take all precautions necessary to handle the possibility of leakage during the test. Hydrostatic pressure test all installations to 100 psig (690 kPa) and correct any leakage before proceeding.

7.0 Maintenance



WARNING

Use only qualified experienced personnel who are familiar with gagecock equipment and thoroughly understand the implications of the tables and all the instructions. DO NOT proceed with any maintenance unless the gagecock assembly has been relieved of all pressure or vacuum, has been allowed to reach ambient temperature and has been drained or purged of all fluids. Failure to do so can cause serious personal injury and property damage.

The user must create maintenance schedules, safety manuals and inspection details for each gagecock. These will be based upon the users own operating experience with their specific application. Realistic maintenance schedules can only be determined with full knowledge of the services and application situations involved.

During system shutdown, the gagecocks should be left open to permit the gage to lose pressure and cool with the rest of the system. Failure to leave the gagecock open during system shutdown may trap high-pressure fluid in the gage.

7.1 Preventative Maintenance

On all installations the following items should be regularly evaluated by the user for purposes of maintenance:

1. Leakage around stem area
2. Internal stem leak
3. Leakage around union connections
4. Internal or external corrosion

The user must determine, upon evaluation of his or her own operating experience, an appropriate maintenance schedule necessary for his or her own specific application. Realistic maintenance schedules can only be determined with full knowledge of the services and application situation involved.

7.2 Ball Check Shut-Off

SAFETY INSTRUCTIONS

Ball checks, when installed, may fail to seat due to corrosion of the ball or seat, foreign material in ball chamber or viscous material in the ball chamber. A routine operational test of the ball check can prevent significant seepage of liquid in the event of glass breakage.

An operational check can be performed on the gagecock ball check by closing both the upper and lower gagecock stems completely. Drain contents from and relieve pressure on liquid gage to an appropriate safe container/area. **NOTE**: Some loss of process fluid to the drain line is expected with this test procedure.

WARNING

Use only qualified experienced personnel who are familiar with gagecock equipment and thoroughly understand the implications of the tables and all the instructions. DO NOT proceed with any maintenance unless the gagecock assembly has been relieved of all pressure or vacuum, has been allowed to reach ambient temperature, and has been drained or purged of all fluids. Failure to do so can cause serious personal injury and property damage.

With drain line in place, open **BOTTOM** gagecock as rapidly as possible. Listen for "click" sound, which will indicate that the ball has seated. If possible, observe the quantity of flow from the drain line. Flow should either stop completely or be no greater than single drips (no solid stream). Close lower gagecock. Repeat above procedure for **UPPER** gagecock. There must be a pressure differential of at least 5 psig (35 kPa) for the above procedure to work properly.

If the above procedure is not successful, the only alternative is to isolate the gage and gagecock assembly from the vessel or to shut the process down completely. Disassemble the gagecock as outlined in section 8.1 using the exploded parts drawing in Section 11.0 as a reference. Visibly inspect ball check and ball seats in the gagecock body. Remove any foreign matter and/or replace with new ball checks if inspection indicates this is required. If the ball seat is damaged, consider replacing the gagecock or the seat (if it is removable). Reassemble gagecocks as outlined in Section 8.2.

7.3 Troubleshooting

STEM PACKING LEAKAGE can often be stopped by tightening the stem packing nut. If leak persists, the stem packing should be replaced by following steps 1) through 5) of the Disassembly and 1) through 7) of the Reassembly instructions

INTERNAL SEAT LEAKAGE is an indication of a worn or damaged stem or seat. To replace the stem follow steps 1) through 5) of the Disassembly and 1) through 7) of the Reassembly instructions. To renew the seat surface, follow steps 1) and 2) of the Disassembly instructions. Renew the seats by using a fine lapping compound and a mandrel the same size, shape and seat angle as the stem. Flush the gagecock body clean and reassemble by following steps 4) and 5) of the Reassembly instructions.

Renewable Threaded Sheets (Series 200 and 400). Remove the seat by inserting a 1/4" (6 mm) square driver in the seat and turning it counterclockwise. Install the new seat by turning it clockwise using the square driver, making sure that the ball check, if used, is replaced in the body. Tighten the seat in place.

LEAKAGE AROUND UNION connections can often be stopped by tightening union coupling nut or remake connection using Teflon® tape, or equivalent on all male pipe threads as shown in Figure 1.

INTERNAL OR EXTERNAL CORROSION could be an indication of a misapplication. An investigation should immediately be carried out to determine the cause of the problem. It is the user's responsibility to choose a material of construction compatible with both the contained fluid and the surrounding atmosphere.

8.0 Removal - Disassembly - Reassembly



Use only qualified experienced personnel who are familiar with gagecock equipment and thoroughly understand the implications of the tables and all the instructions. DO NOT proceed with any maintenance unless the gagecock assembly has been relieved of all pressure or vacuum, has been allowed to reach ambient temperature and has been drained or purged of all fluids. Failure to do so can cause serious personal injury and property damage.

8.1 Disassembly

Refer to the exploded parts drawing in Section 11.0 for additional reference during disassembly and reassembly of the gagecocks.

1) Remove handwheel nut (30), nameplate (163) and handwheel (28) or lever (261) from stem.
2) Loosen and remove stem packing nut (26)
3) Remove stem by turning counterclockwise, along with stem packing gland (19), stem packing (25) and stem packing retainer (18).
4) Slip the stem packing gland (19), stem packing (25) and stem packing retainer (18) off stem (17).
5) On Series 200 and 400 gagecocks, remove bonnet nut (21) and bonnet (20).
6) To replace seat on Series 200 and 400 gagecocks, follow instructions as described in maintenance procedures, section 7.3.

8.2 Reassembly

Refer to the exploded parts drawing in Section 11.0 for additional reference during disassembly and reassembly of the gagecocks.

1) Prepare for installation of new packing by cleaning all packing chambers and glands of upper and lower gagecocks.
2) On Series 200 and 400 gagecocks, replace bonnet (20) and bonnet nut (21) and tighten securely in place.
3) Slip packing retainer (18) on stem (17)
4) Install new stem packing (25) and stem packing gland (19)
5) Thread stem assembly into gagecock by turning clockwise until stem seats and then back off one turn (1/8 turn with quick close stem)
6) Assemble stem packing nut (26) and tighten in place
7) Assemble handwheel (28) or lever (261), nameplate (163) and handwheel nut (30) on stem and tighten securely in place.
8) Close both gagecocks by turning handwheel or lever clockwise until stem seats.

Refer to Section 6.0 for operation of the gagecock when returned to service.

9.0 Disposal at End of Useful Life

Penberthy Series 100, 200, 300 and 400 gagecocks are used in a variety of fluid applications. By following the appropriate federal and industry regulations, the user must determine the extent of preparation and treatment the Series 100, 200, 300 and 400 gagecocks must incur before their disposal. A Material Safety Data Sheet (MSDS) may be required before disposal services accept certain components.

Metal, glass and polymers should be recycled whenever possible. Refer to order and TV&C - Prophetstown Material Specification sheets for materials of construction.

10.0 Telephone Assistance

If you are having difficulty with your Penberthy Series 100, 200, 300 and 400 gagecocks, contact your local Penberthy distributor. You may also contact the factory direct at (815) 537-2311 and ask for an applications engineer. So that we may assist you more effectively, please have as much of the following information available as possible when you call:

Model #
Name of the company from whom you purchased the Penberthy Series 100, 200, 300 and 400 gagecocks
Invoice # and date
Process conditions (pressure, flow rates, tank shape, etc)
A brief description of the problem
Trouble shooting procedures that failed

If attempts to solve your problem fail, you may request to return your Penberthy Series 100, 200, 300 and 400 gagecocks to the factory for intensive testing. You must obtain a Return Authorization (R.A.) number from TV&C Prophetstown before returning anything. Failure to do so will result in the unit being returned to you without being tested, freight collect. To obtain an R.A. number, the following information (in addition to that above) is needed:

Reason for return
Person to contact at your company
"Ship To" address

There is a minimum charge for evaluation of non-warranty units. You will be contacted before any repairs are initiated should the cost exceed the minimum charge. If you return a unit under warranty, but is not defective, the minimum charge will apply.

Teflon® is a registered trademark of E. I. duPont de Nemours and Company
Grafoil® is a registered trademark of Graftech, Inc.

11.0 Exploded Parts Drawing

SPARE PARTS

Ref. No.	Item	Min. Qty.
18	Retainer, Stem Packing	1
19	Gland, Stem Packing	1
25	Packing, Stem	1
30	Nut, Handwheel	1

RECOMMENDED MAXIMUM QUANTITIES SHOULD PROVIDE SPARE PARTS FOR 10% OF THE GAGECOCKS IN SERVICE

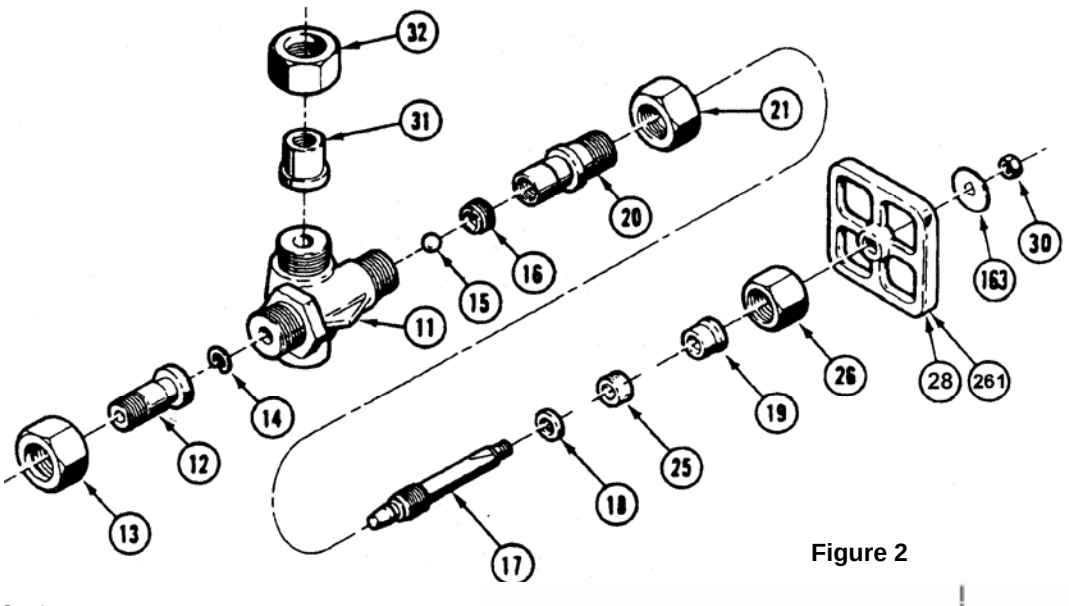

Figure 2

7 Gasket
11 Body
12 Tailpipe
13 Nut, Vessel Coupling
14 Retainer, Ball Check
15 Ball
16 Seat
17 Stem
18 Retainer, Stem Packing
19 Gland, Stem Packing
20 Bonnet
21 Nut, Bonnet
25 Packing, Stem
26 Nut, Stem Packing
28 Handwheel
30 Nut, Handwheel
31 Tailpipe, Gage
32 Nut, Gage Coupling
163 Nameplate
261 Lever

Note: Seat (16), Bonnet (20) and Nut (21) are to be used on Series 200 and 400 gagecocks only.

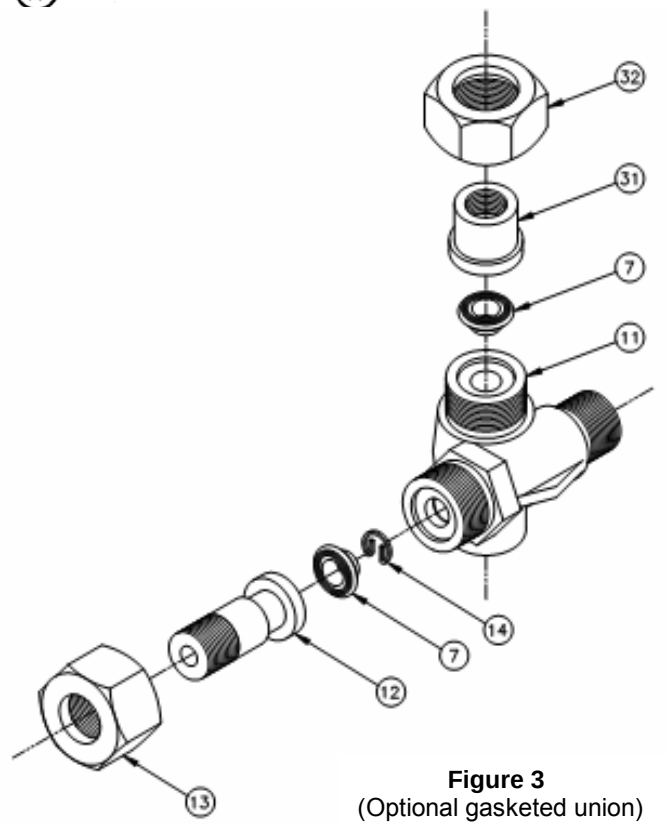

Figure 3
(Optional gasketed union)

NOTES

NOTES



Tyco Valves & Controls, L.P. Prophetstown
320 Locust St., Prophetstown, Illinois 61277
Phone: 815-537-2311
FAX: 815-537-5764
Printed in USA
Part No. 14912-009

© 2005 Tyco Valves & Controls, L.P. Prophetstown, All Rights Reserved

Section 2000
Bulletin 2100
Issued 12/07
Replaces 10/05

Direct Reading Liquid Level Gages and PENBERTHY Gagecocks

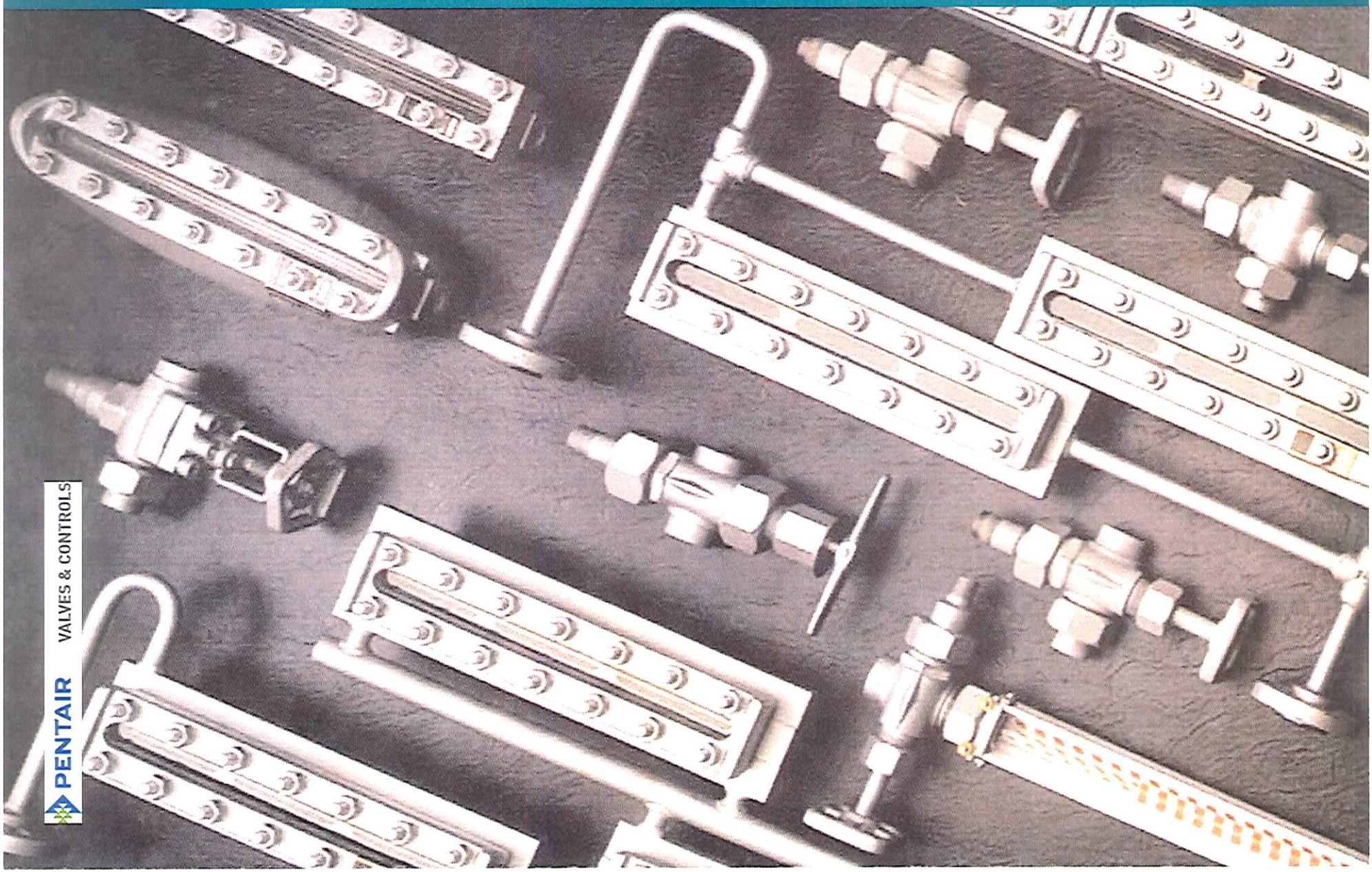

PENTAIR VALVES & CONTROLS

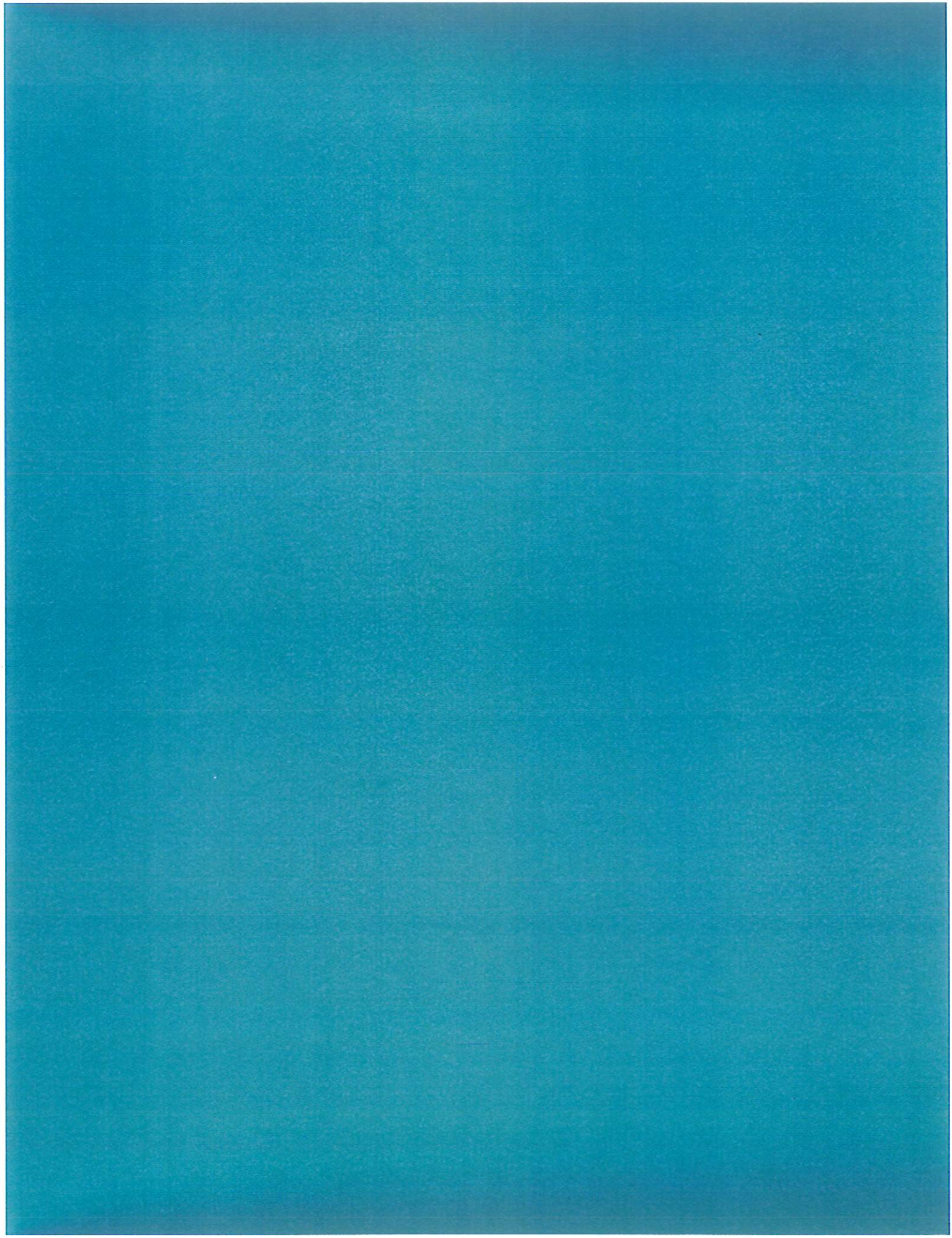

TABLE OF CONTENTS

Flat Glass Gages

Flat Glass Gages Overview 4-7
Low Pressure Flat Glass Gages: Models RL & TL 8
Medium Pressure Flat Glass Gages: Models RM & TM, RMR & TMR 9
High Pressure Flat Glass Gages: Models RH & TH, RHR & THR 10
Large Chamber Flat Glass Gages: Models RLC & TLC 11
Weld Pad Flat Glass Gages: Models RMW & TMW 12
Dimensions for Process Glass 13
Ultra High Pressure Flat Glass Gages: Model TU 14
Steam/Water Flat Glass Gages: Models TSL, TSL-F, TSM, TSM-F 15

Offshore Gage Glasses

Offshore Glass Gages Overview 16-17

Tubular Glass Gages

Tubular Glass Gages Overview 18-19

Gagecocks

Gagecocks Overview 22-23
Flat Glass Gagecocks: Series 100, 200 24
Flat Glass Gagecocks: Series 300, 400 25
Flat Glass Gagecocks: Series 500 26
Flat Glass Gagecocks: Series 700 27
OS&Y Fugitive Emission Gagecocks: Series 550, 750 28
Flat Glass Gagecocks: Series 600 29
Tubular Glass Gagecocks: Series N2, K2 30
Tubular Glass Gagecocks: Series K3 31
Tubular Glass Gagecocks: Series N6 32
Tubular Glass Gagecocks: Series N7 33

Accessories

Graph-a-Bond™ Gaskets 20
Protectors, Extensions,
Heating & Cooling Devices, Valves & Fittings 34
Gasketed Union Tailpipes 21

Copyright Pentair

Armored Flat Glass Gages

Flat glass gages provide direct observation of liquid level in a process vessel. The process liquid level and liquid characteristics can be observed through the glass as it rises and falls in the gage chamber.

The six basic components of flat glass gages are as follows:

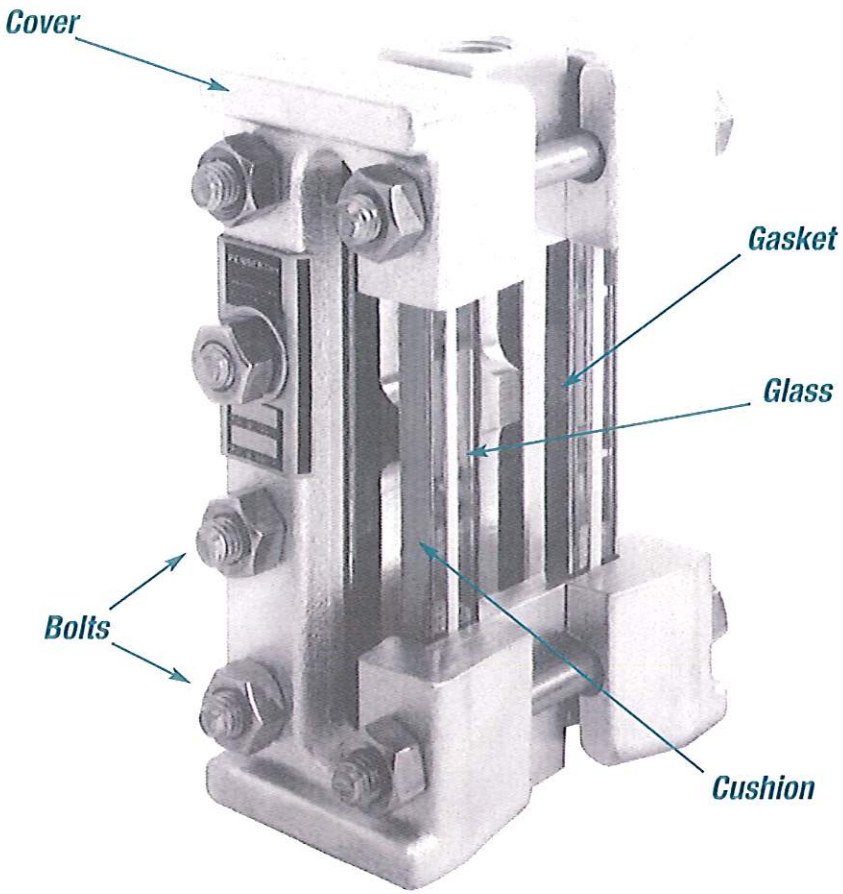

Chamber

Pressure retaining element which provides rigidity to the gage assembly and a means to connect the gage to isolation gagecocks or other vessel connections.

Penberthy's standard chambers have a flat gasket seat to allow for easy removal of gasket residue and fragments. Because the chamber does not have a recessed face, the gasket may be removed quickly with a flat blade.

Penberthy has an optional chamber with a recessed gasket seating surface to meet customer requirements.

Slots are machined into Penberthy's transparent gage chambers rather than continuous vision slots. These cross ties between vision slots increase the mechanical integrity along the length of the chamber.

The cross tie provides a higher strength chamber due to the reduction of unsupported beam length. Chambers are available with PFA (Teflon®), PECTFE (Halar®), and PETFE (Tefzel®) lining.

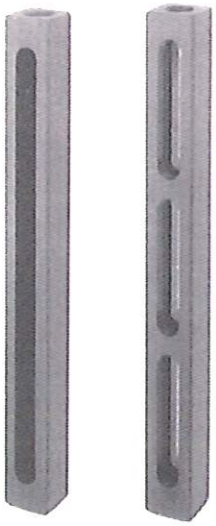

Reflex **Transparent**

Standard Gasket Chamber



Recessed Gasket Chamber

Gasket

Seals the gap and prevents leaking between the glass and the chamber.

Glass

Contains the process liquid and provides the viewing window to the process liquid level.

Cushion

Protects the glass from mechanical stress points by acting as a buffer between the glass and cover.

Cover

Protects the glass from mechanical impact along the sides of the chamber and provides a compression surface for the bolts/studs/nuts to hold the gasket and glass tightly against the chamber.

Bolts/Studs/Nuts

Properly torqued gage bolting applies a uniform compressive load to the gage assembly for pressure retaining purposes.

Copyright Pentair

Multiple Section Gages

To meet visible glass lengths greater than Size 9 glass (12.625" [321 mm]), Penberthy stacks covers along the length of the single chamber. The maximum operating pressure and temperature ordinarily determine the largest glass size that can be used.

Vision slots are cut according to the size of the glass used and the number of sections necessary to meet the desired vision length or minimum center to center (vessel connections). Support brackets should be attached to larger gages to support the weight of the gage assembly.

The maximum number of sections (covers) that can be used on a single gage chamber is ten. If the required liquid level vision length extends beyond 139.750" [3550 mm], multiple section gages may be bridled to a standpipe or alternately top-bottom side connected.



3-section gage on continuous chamber

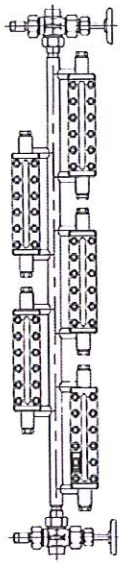

Continuous vision single-section gages on standpipe

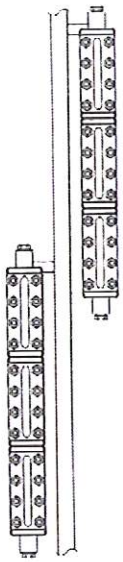

Multiple section gages on standpipe

Gage Connections

End, side and back (typically reflex only) connections can be machined into the gage chamber to provide end users with desired center to center distance and/or the optimum vision position for liquid level viewing. Connections include NPT, BSP, ANSI flanged, DIN flanged and socketweld.

Gage Connections

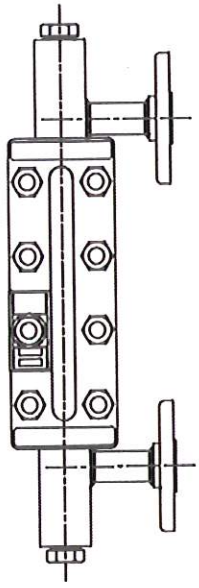

Side Connect

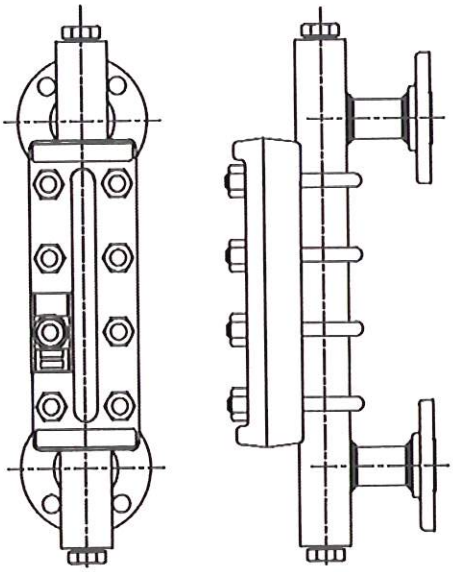

Back Connect

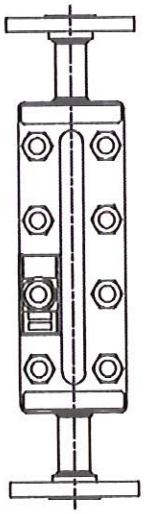

End Connect

Copyright Pentair

Reflex and Transparent Gages

Reflex gages have a single vision slot in which light can enter the gage chamber to determine liquid level. Above the liquid level, glass prisms reflect the surrounding light. Below the liquid level the liquid fills the prisms causing the glass to become relatively transparent.

Light striking the area of glass covered by transparent liquid is allowed to pass through to the interior of the gage along the entire length of the covered prism. The light is reflected from the back of the chamber to the observer. Typically the chamber appears dark. An opaque liquid such as milk would directly reflect the light at the surface of the prisms, where it appears as a solid column of white.

Light striking the area of the glass above the liquid level experiences internal reflection. Internal reflection will occur when light attempts to move from a medium having a given index of refraction to one having a lower index of refraction.

When the light attempts to move from a higher index of refraction (glass – 1.47 index of refraction) to a lower index of refraction (air – 1.00 index of refraction through the prism angle), it reflects rather than passes through to the back of the chamber. Except for a focused line of light along the apex of the prism, the surrounding light reflects back to the observer appearing silvery.

Reflex

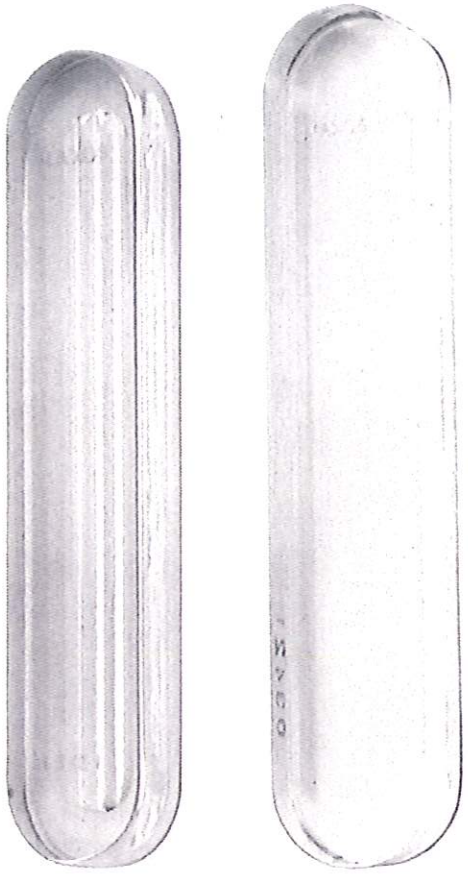

Transparent

The interface between the liquid and gas occurs where the silvery and dark/opaque area intersect.

Transparent gages have a vision slot on both sides of the chamber. Light enters the gage from the side opposite the observer so that both the level of a liquid and its characteristics can be seen. For easier liquid observation in dark environments, illuminators are available for use with transparent gages.

Transparent gages may be used for interface applications.

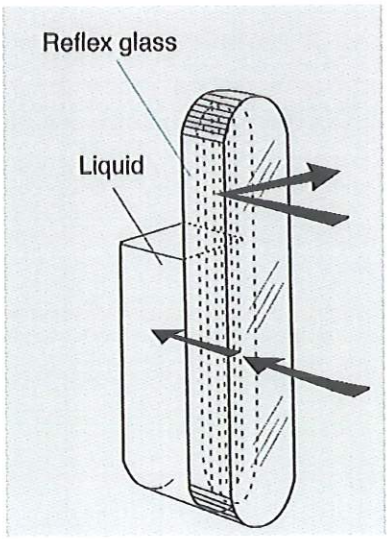

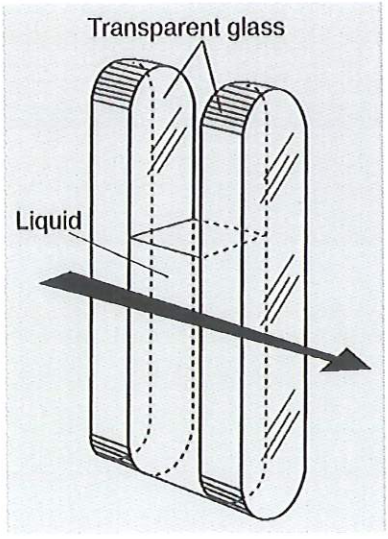

Copyright Pentair

Armored Gages

Armored flat glass gages give users the ability to visually inspect liquid characteristics (color, particulate, striations, turbulence) and monitor relative fill or drain rates in a variety of applications where vibration, temperature and/or pressure extremes rule out level technologies.

End users interested in establishing a reliable, easy-to-understand level reference often use flat glass gages to verify electronic level device output at plant start-up or routine maintenance (especially pressure vessels).

Other distinct advantages:

- They require no electrical power. Level can be monitored in remote locations where no power is available. In event of a power failure, the flat glass gage is not effected.
- They are not dependent on most liquid properties. Multiple liquids can be processed through the same vessel without concerns for density, surface turbulence, di-electric, conductivity, etc.
- They're suitable for vacuum application.
- They provide a near-unlimited length of measure.
- They're non-intrusive.

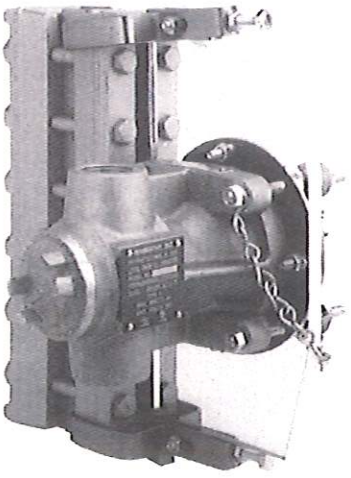

Illuminator Assembly

Borosilicate Glass, Aluminosilicate Glass and Quartz

Borosilicate glass is the most common type of optic material used in Penberthy gages. Borosilicate glass offers good resistance to most chemicals at temperatures at or below 600˚F [316˚C].

Penberthy uses tempered borosilicate glass in its gages to improve thermal shock resistance. The tempering process involves heating the glass to a glassy transition point and rapidly cooling the glass to create compressive stress in the outer 1/6 of thickness.

Aluminosilicate glass has a higher viscosity and a lower thermal expansion coefficient compared to borosilicate glass. Aluminosilicate glass is commonly used where process temperatures are greater than 600˚F [316˚C] but are at or below 800˚F [427˚C].

Fused quartz is made from crystalline silica with few impurities (50 ppm by weight). The highest temperature rating, 1000ºF [538ºC], is achieved by using quartz.

Materials other than quartz limit a gage assembly's maximum operating temperature.

Penberthy offers quartz in its model TH only. The physical properties of quartz require an extremely flat seating surface. Flatness tolerance of gasket and cushion seating surfaces on chambers and covers must be maintained to avoid torsional or point stresses on the quartz.

Shields (e.g., PCTFE, Mica) can be installed to prolong the life of transparent flat glass in corrosive or erosive environments such as hydrofluoric acid, sodium hydroxide or steam.

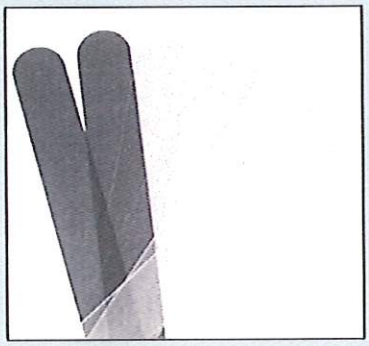

Temperature Ranges for Commonly Used Optical Material

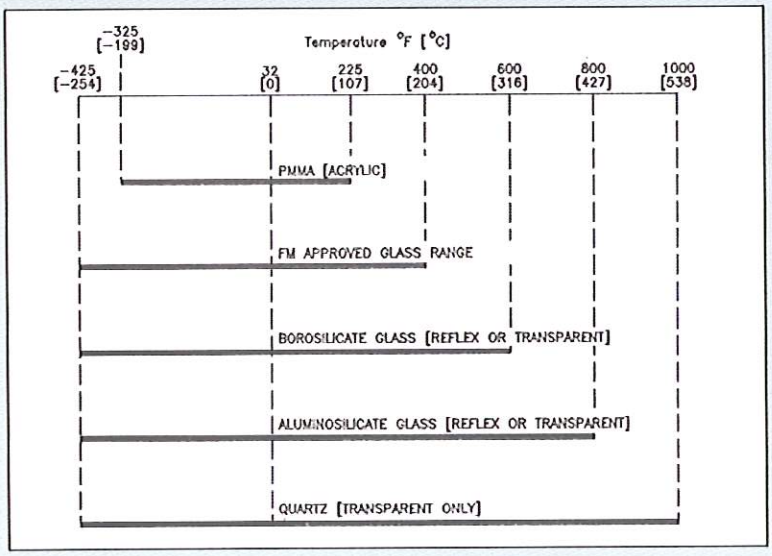

Copyright Pentair

Low Pressure Flat Glass Gages

FM APPROVED

for less demanding process conditions...

Penberthy's low pressure gages are designed to maximize the mechanical and economical advantages of ductile iron covers.

All materials in low pressure gages conform to ASTM specifications. RL gages can achieve pressures to 2400 psig [16550 kPa] @ 100°F [38°C] and TL gages can achieve pressures to 2000 psig [13790 kPa] @ 100°F [38°C] when manufactured with size 1 glass – see ratings table below.

Penberthy does not recommend low pressure gages for steam/water applications.

Model RL – Reflex Low Pressure



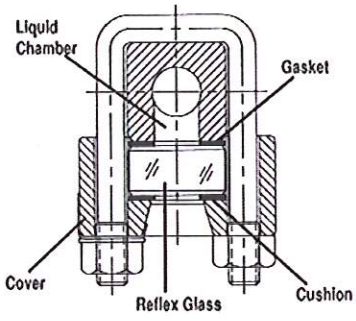

Model TL – Transparent Low Pressure

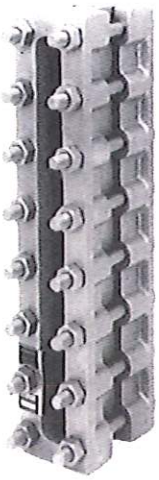

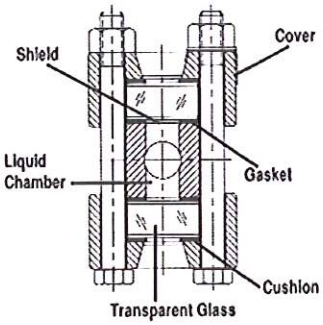

Model RL Pressure/Temperature

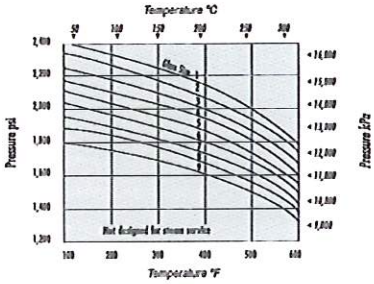

Model TL Pressure/Temperature

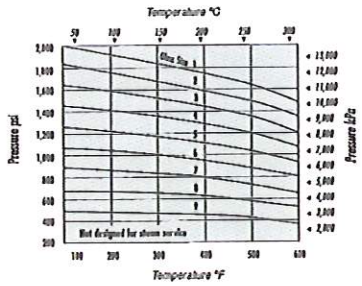

Standard/Optional Features

CONNECTION TYPE	STANDARD	OPTIONAL
End Connections		
Threaded		
1/2" NPTF	X	
3/4" NPTF		X
Socketweld		
1/2" female		X
3/4" female		X
Flanged		X
Side or Back (typically reflex only) **Connections**		
Threaded		
1/2" NPTF		X
3/4" NPTF		X
Socketweld		
1/2" female		X
3/4" female		X
Flanged		X

NOTE: Pressure/Temperature ratings shown for standard gasket, otherwise see chart on page 13.

Copyright Pentair

Medium Pressure Flat Glass Gages

FM APPROVED

for most common process conditions...

Strength and versatility make Penberthy's medium pressure gages ideal for most common process conditions. Offshore specification 2600.1 is preferred with medium pressure gages in offshore and other corrosive environments.

All materials in medium pressure gages conform to ASTM specifications. RM gages can achieve pressures to 3000 psig [20680 kPa] @ 100°F [38°C] and TM gages can achieve pressures to 2500 psig [17240 kPa] @ 100°F [38°C] when manufactured with size 1 glass – see ratings table below.

Although not designed for thermal cycling, Penberthy allows use of medium pressure gages for steam/ water applications due to historical precendence - see Application Report 2781 in Penberthy Catalog.

Model RM – Relfex Medium Pressure



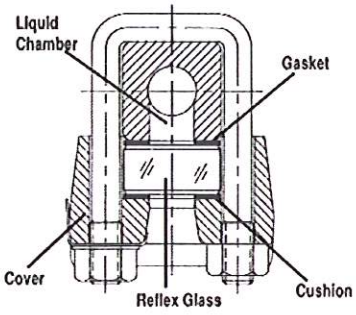

Model TM – Transparent Medium Pressure

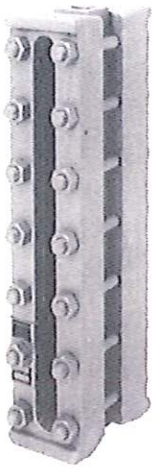

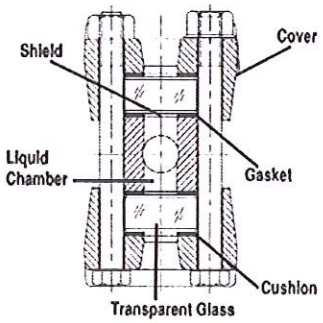

Model RM Pressure/Temperature

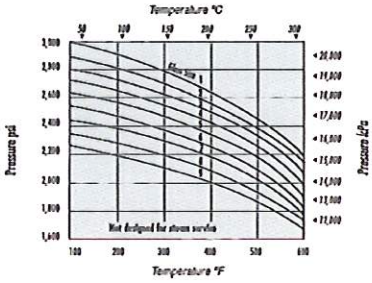

Model TM Pressure/Temperature

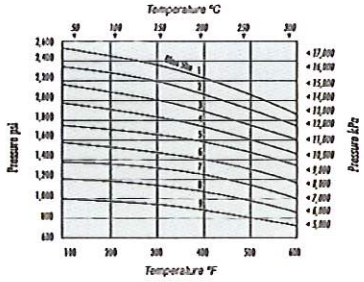

NOTE: Pressure/Temperature ratings shown for standard gasket, otherwise see chart on page 13.

For environmental Nace MR0175 &/or MR0103 gages, pressure de-rating is required

Standard/Optional Features

CONNECTION TYPE	STANDARD	OPTIONAL
End Connections		
Threaded		
1/2" NPTF	X	
3/4" NPTF		X
Socketweld		
1/2" female		X
3/4" female		X
Flanged		X
Side or Back (typically reflex only) **Connections**		
Threaded		
1/2" NPTF		X
3/4" NPTF		X
Socketweld		
1/2" female		X
3/4" female		X
Flanged		X
Chambers		
Recessed Gasket		X

**Gages with recessed gaskets are designed with the letter R at the end of the Model Number (i.e. RMR)*

Copyright Pentair

High Pressure Flat Glass Gages

FM APPROVED

Heavy duty construction for high pressure resistance...

Penberthy engineers its high pressure cover to allow maximum rated pressure regardless of glass size. High pressure gages resist torsional stresses exceptionally well to provide a process gage for the most demanding applications.

All materials in high pressure gages conform to ASTM specifications. RH gages can achieve pressures to 4000 psig [27580 kPa] @100˚F [38˚C] and TH gages can achieve pressures to 3000 psig [20680 kPa] @ 100˚F [38˚C] for all glass sizes – see ratings table below.

Penberthy does not recommend high pressure gages for steam/water applications. They are designed for high pressure, but low thermal cycle duty.

Model RH Pressure/Temperature

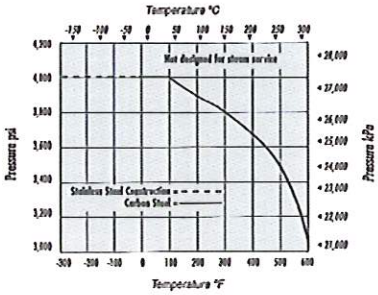

Model TH Pressure/Temperature

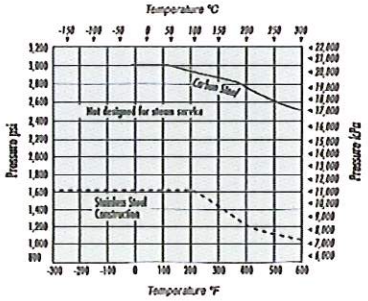

NOTE: Pressure/Temperature ratings shown for standard gasket, otherwise see chart on page 13.

For environmental Nace MR0175 &/or MR0103 gages, pressure de-rating is required

Model RH – Reflex High Pressure

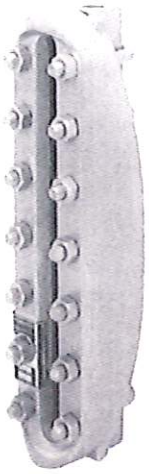

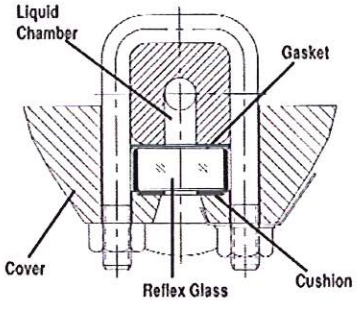

Model TH – Transparent High Pressure

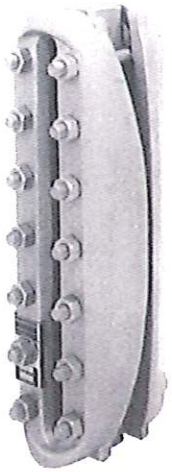

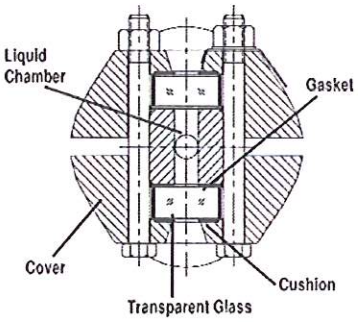

Standard/Optional Features

CONNECTION TYPE	STANDARD	OPTIONAL
End Connections		
Threaded		
1/2" NPTF	X	
3/4" NPTF		X
Socketweld		
1/2" female		X
3/4" female		X
Flanged		X
Side or Back (typically reflex only) **Connections**		
Threaded		
1/2" NPTF		X
3/4" NPTF		X
Socketweld		
1/2" female		X
3/4" female		X
Flanged		X
Chambers		
*Recessed Gasket**		X

**Gages with recessed gaskets are designed with the letter R at the end of the Model Number (i.e. RHR)*

Copyright Pentair

Large Chamber Flat Glass Gages

FM APPROVED

for turbulent surface or extremely transparent liquids...

Combining high pressure covers and a large cylindrical chamber, these gages can improve accuracy in determining turbulent vessel liquid levels. In addition to simulating the function of a stilling well and providing a liquid column approximately four times the diameter of standard gages, large chamber gages can provide end connections up to 2" NPTF that can accommodate various instrumentation.

All materials in large chamber gages conform to ASTM specifications. RLC gages can achieve pressures to 2400 psig [16550 kPa] @ 100°F [38°C] and TLC gages can achieve pressures to 1580 psig [10890 kPa] @ 100° F [38°C] for all glass sizes – see ratings table below.

Penberthy does not recommend large chamber gages for steam/water applications.

Model RLC Pressure/Temperature

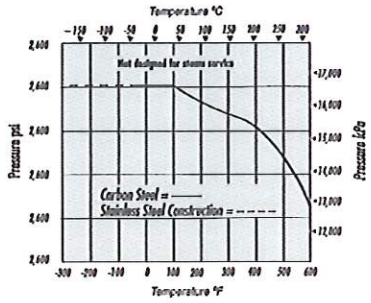

Model TLC Pressure/Temperature

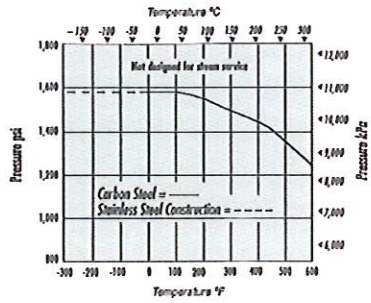

NOTE: Pressure/Temperature ratings shown for standard gasket, otherwise see chart on page 13.

For environmental Nace MR0175 &/or MR0103 gages, pressure de-rating is required

Model RLC – Reflex Large Chamber

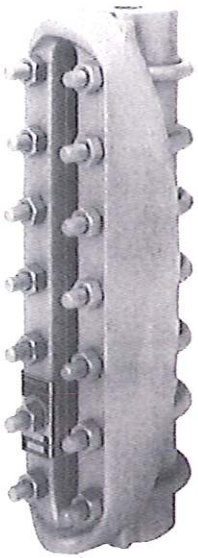

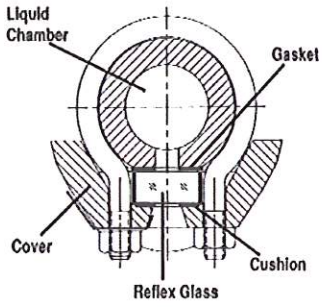

Model TLC – Transparent Large Chamber

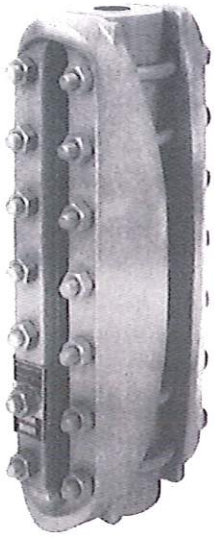

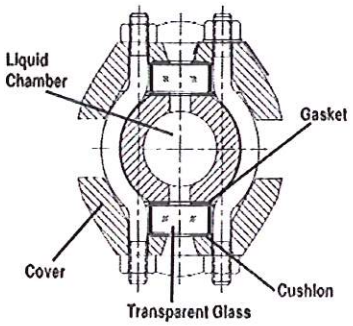

Standard/Optional Features

CONNECTION TYPE	STANDARD	OPTIONAL
End Connections		
Threaded		
1/2" NPTF	X	
3/4"-2" NPTF		X
Socketweld		
1/2"-2" female		X
Flanged		X
Side or Back (typically reflex only) **Connections**		
Threaded		
1/2" NPTF		X
3/4" NPTF		X
Socketweld		
1/2" female		X
3/4" female		X
Flanged		X

Copyright Pentair

Weld Pad Flat Glass Gages

FM APPROVED

for direct mounting to vessel wall...

For application involving high vibration, highly viscous liquids or liquids with considerable amounts of solids, Penberthy offers end users a flat or radius weld pad gage. Because there are no nipples through which the process liquid enters the gage, clogging potential is eliminated.

When welding the gage to a vessel, it is extremely important to take proper precautions to prevent warpage of the chamber. Penberthy strongly recommends the use of an optional steel spacer for welding.

After welding, it is important to check the flatness of all glass seating surfaces as described in Penberthy's Installation, Operation, and Maintenance manual.

All materials in weld pad gages conform to ASTM specifications. RMW and TMW gages can achieve pressures to 2000 psig [13790 kPa] @ 100°F [38°C] – when manufactured with size 1 glass – see table below.

Model RMW – Reflex Medium Weld Pad

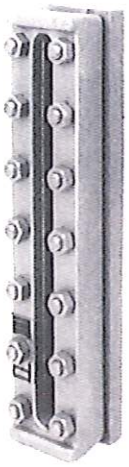

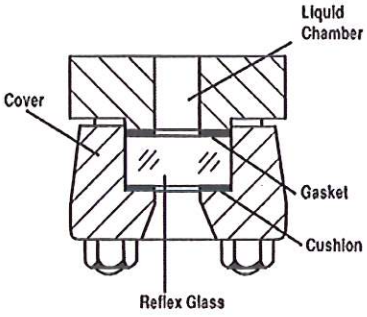

Model TMW – Transparent Medium Weld Pad



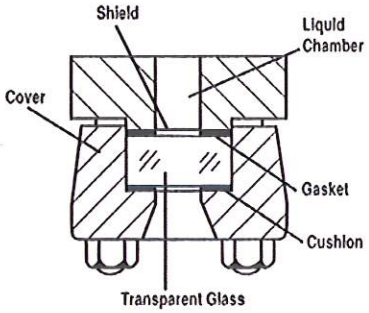

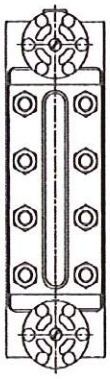

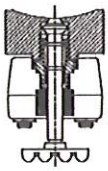

Isolable Gagecocks – Weld Pad Gage

Integral gagecocks can be added to Penberthy's weld pad gages. These gagcocks allow the gage to be isolated for maintenance without lowering the liquid level below the gage.

Penberthy does not recommend weld pad gages for steam/water applications.

Standard/Optional Features

FEATURE	STANDARD	OPTIONAL
Flat Pad	X	
Radius Pad		
2" [51 mm] min. radius through 12" [305 mm] max. radius		X
Isolable Gagecocks		X

Model RMW Pressure/Temperature

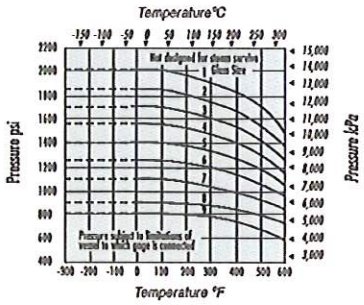

Model TMW Pressure/Temperature

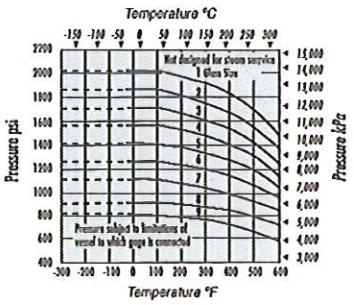

NOTE: Pressure/Temperature ratings shown for standard gasket, otherwise see chart on page 13.

For environmental Nace MR0175 &/or MR0103 gages, pressure de-rating is required

Copyright Pentair

Dimensions for Process Gages

5 Section Gage
Size 9 Glass

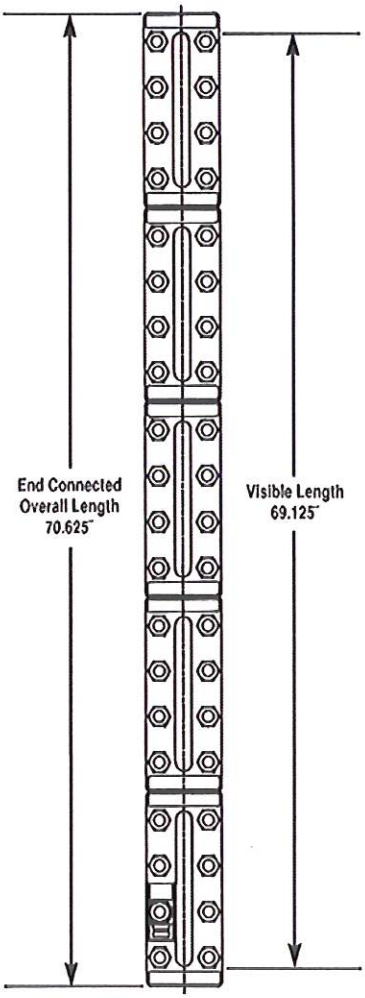

Sections	Model	Glass Size	Visible Length		End Connected Overall Length	
			inch	mm	inch	mm
1	RL/TL	1	3.750	95	5.250	133
1	RM(R)/TM(R)	2	4.750	121	6.250	159
1	RMW/TMW	3	5.750	146	7.250	184
1		4	6.750	171	8.250	210
1		5	7.875	200	9.375	238
1		6	9.125	232	10.625	270
1		7	10.250	260	11.750	298
1		8	11.875	302	13.375	340
1		9	12.625	321	14.125	359
2		4	15.000	381	16.500	419
2		5	17.250	438	18.750	476
2		6	19.750	502	21.250	540
2	RL	7	22.000	559	23.500	597
2	TL	8	25.250	641	26.750	679
2	RM	9	26.750	679	28.250	718
3	RMR	6	30.375	772	31.875	810
3	TM	7	33.750	857	35.250	895
3	TMR	8	38.625	981	40.125	1019
3	RH	9	40.875	1038	42.375	1076
4	RHR	7	45.500	1156	47.000	1194
4	TH	8	52.000	1321	53.500	1359
4	THR	9	55.000	1397	56.500	1435
5	RLC	7	57.250	1454	58.750	1492
5	TLC	8	65.375	1661	66.875	1699
5	RMW	9	69.125	1756	70.625	1794
6	TMW	8	78.750	2000	80.250	2038
6		9	83.250	2115	84.750	2153
7		8	92.125	2340	93.625	2378
7		9	97.375	2473	98.875	2511
8		8	105.500	2680	107.000	2718
8		9	111.500	2832	113.000	2870
9		8	118.875	3019	120.375	3058
9		9	125.625	3191	127.125	3229
10		8	132.250	3359	133.750	3397
10		9	139.750	3550	141.250	3588

Pressure/Temperature De-Rating for Material Other Than Standard

Gasket Material	Maximum Pressure at specified temperature psig [kPa]									
	100°F	[38°C]	250°F	[121°C]	300°F	[149°C]	400°F	[204°C]	500°F	[260°C]
Buna-N	300	[2070]	225	[1550]	–	–	–	–	–	–
EPDM	300	[2070]	225	[1550]	210	[1450]	–	–	–	–
Neoprene	300	[2070]	225	[1550]	210	[1450]	–	–	–	–
Viton® (FKM)	300	[2070]	225	[1550]	210	[1450]	180	[1240]	–	–
Daikin® (PCTFE)	300	[2070]	225	[1550]	210	[1450]	180	[1240]	–	–
Teflon® (PTFE)	300	[2070]	225	[1550]	210	[1450]	180	[1240]	150	[1030]

Graphite ribbon (Grafoil®) and non-asbestos (Nobestos D-7301®) gasket ratings are derived from performance curves.

Copyright Pentair

Ultra-High Pressure Flat Glass Gages

for extraordinary pressure and vapor requirements...

The method of clamping and sealing the glass differs from other gages in that the glass does not experience stress concentrations imposed by bolting. The glass becomes a floating member between two solidly bolted blocks of rigid plate.

The pressure activated seal principle provides a self adjusting means of maintaining a tight joint between glass and liquid chamber. The gasket system compensates for machining variations.

Because glass can take a tremendous amount of evenly loaded compression, the gage can withstand extremely demanding pressure requirements.

All materials in TU gages conform to ASTM specifications. TU gages can achieve pressures to 6000 psig [41370 kPa] @ 250˚F [121˚C]. Pressure rating is not glass size dependent. A higher temperature rating 400˚F [204˚C] @ 6000 psig [41370 kPa] can be achieved by using Viton®. Teflon® can achieve 500˚F [260˚C] @ 6000 psig [41370 kPa].

Penberthy does not recommend ultra-high pressure gages for steam/water applications.

Model TU Pressure/Temperature

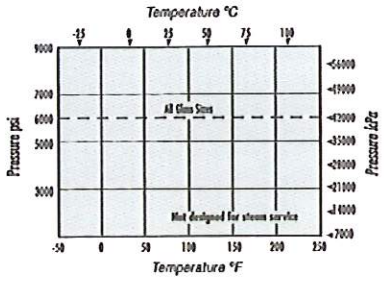

NOTE: Pressure/Temperature ratings shown for standard gasket, otherwise see chart on page 13.

Model TU - Transparent Ultra High Pressure

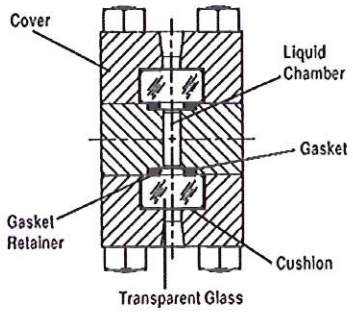

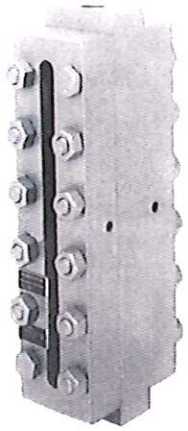

Standard/Optional Features

CONNECTION TYPE	STANDARD	OPTIONAL
End Connections		
Threaded		
1/2" NPTF	X	
3/4" NPTF		X
Socketweld		
1/2" female		X
3/4" female		X
Flanged		X
Side Connections		
Threaded		
1/2" NPTF		X
3/4" NPTF		X
Socketweld		
1/2" female		X
3/4" female		X
Flanged		X

Dimensions

Sections	Model	Glass Size	Visible Length		End Connected Overall Length	
			inch	mm	inch	mm
1	TU	1	3.531	90	6.500	165
1	TU	3	5.531	140	8.500	216
1	TU	4	6.531	166	9.500	241
1	TU	5	7.656	194	10.625	270
1	TU	7	10.031	255	13.000	330
2	TU	1	8.875	225	11.750	298
2	TU	3	12.875	327	15.750	400
2	TU	4	14.875	378	17.750	451
2	TU	5	17.125	435	20.000	508
2	TU	7	21.875	556	24.750	629
3	TU	3	20.219	514	23.094	587
3	TU	4	23.219	590	26.094	663
3	TU	5	26.594	675	29.469	749
3	TU	7	33.719	856	36.594	929

Copyright Pentair

Steam/Water Flat Glass Gages

for dynamic thermal environments...

Designed to expand and contract during dynamic thermal conditions, these steam/water gages have extra-heavy construction incorporating a wide chamber. Thermally induced gage stresses are absorbed by the linear expansion within the stuffing box or the expansion loop.

TSL stuffing box or TSL-F flanged configurations can be used for steam/water service at or below 650 psig [4480 kPa]. TSM stuffing box or TSM-F flanged configurations can be used at or below 1500 psig [10340 kPa] steam/water service.

Mica shields and Belleville washers are standard to improve the long term sealing of the gage. All materials conform to ASME/ASTM specifications.

The following gagecocks are suggested for use with steam/water gages:

Model 730 OS&Y - for Model TSL and TSM gage having flanged gage connections;

Model 780 OS&Y - for Model TSL and TSM gage having stuffing box connections.

Model TSL, TSL-F, TSM, TSM-F Pressure/Temperature

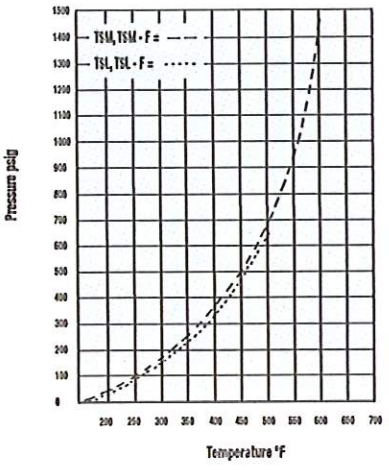

NOTE: Pressure/ Temperature ratings shown for standard gasket.

TSL Configurations

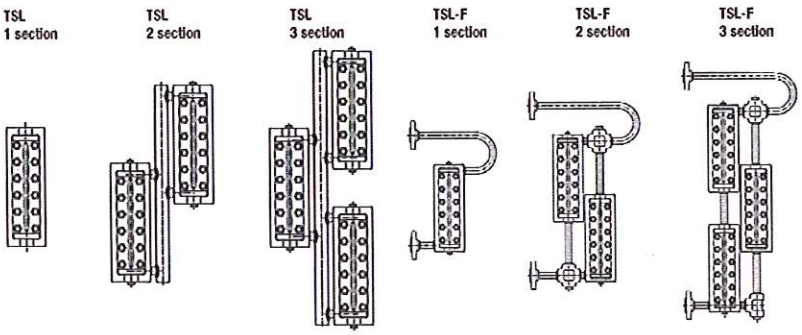

TSM Configurations

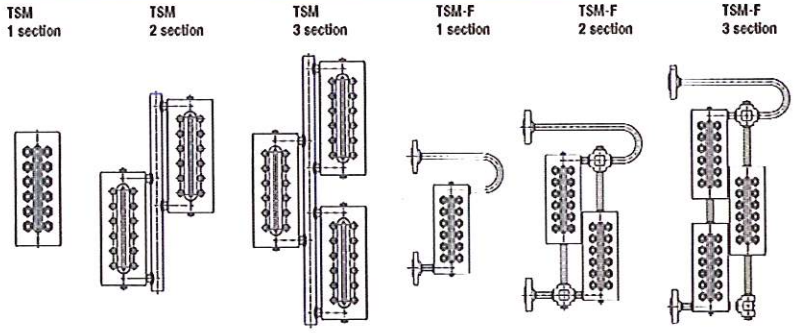

Standard/Optional Features

FEATURE	TSL		TSL-F		TSM		TSM-F	
	Std	Opt	Std	Opt	Std	Opt	Std	Opt
Connections								
Stuffing box nipple 3/4" dia.	X				X			
Flanged			X				X	
Expansion Loop			X				X	
Mica Shields	X		X		X		X	

Dimensions

Sections	Model	Glass Size	Visible Length	
			inch	mm
1		6	9.000	229
1		7	10.125	257
1	TSL	9	12.500	318
2	TSL-F	6	17.000	432
2	TSM	7	19.250	489
2	TSM-F	9	24.000	610
3		6	25.000	635
3		7	28.375	721
3		9	35.500	902



Stuffing Box Nipple

Copyright Pentair

Offshore Gage Glasses

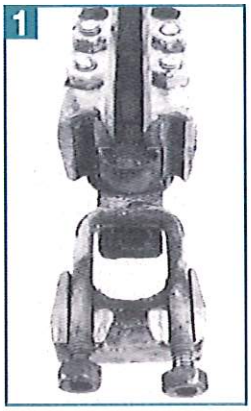

1 Two years actual offshore exposure

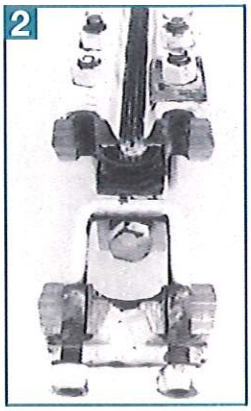

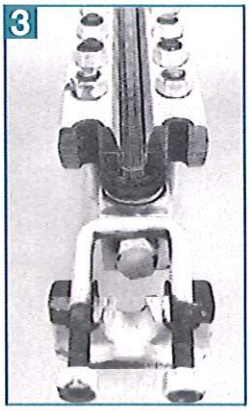

2&3 Two years offshore exposure simulated in lab



4 Flourocarbon and Moly DISulfide coatings too easily penetrated

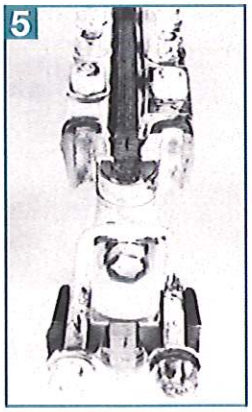

5 Three-part coating applied to individual parts prior to gage assembly controls corrosion-except on hardware

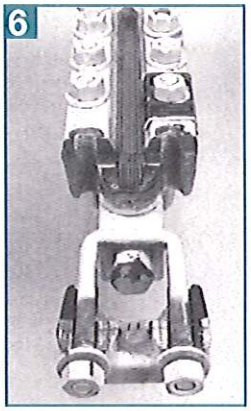

6 Three-part coating as applied by Penberthy provides true "offshore protection"

After experiencing a problem on one of their offshore rigs, a major oil company requested that Penberthy initiate a research program to develop better corrosion protection for offshore gage glass. To assess the relative strengths and weaknesses of various coatings and materials commonly used as "offshore protection," we subjected a number of our own gages as well as competitive models to an accelerated corrosion/weathering test (ASTM B117). While the tests were performed in a controlled laboratory environment, the exposure to over 2500 hours of heat and salt spray provided a corrosive environment that was judged to be comparable to two years of actual offshore use.

Above left is a Penberthy gage (figure 1) which was used offshore for two years in the Gulf of Mexico. It was prepared according to an industry-accepted specification which the oil company had established for its offshore equipment. Badly corroded and potentially dangerous, this gage establishes a benchmark for the kind of corrosion and deterioration that typically occurs

Competitive comparison shows the need for concern in selecting a gage with "offshore" design

As important as coatings are in making a gage corrosion-resistant, their value can be rendered useless if the glass is left vulnerable to other types of damage. The total protection of gage glass is critical in complementing the effectiveness of offshore coatings.

The Penberthy offshore gage design is unique in its ability to completely isolate the gage glass from abrasive forces. This complete protection is important because even seemingly minor abrasions can cause the tempered gage glass to lose most of its pressure containing ability.

The following diagrams illustrate the relative vulnerability of the glass on competitive models.

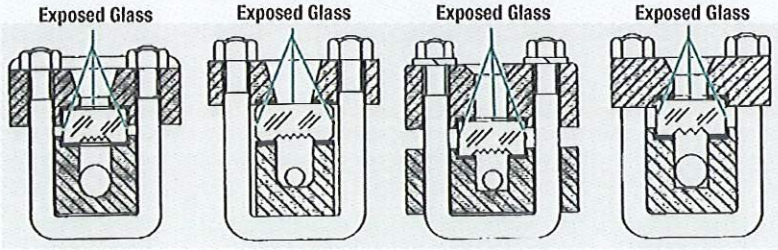

Copyright Pentair

during two years of actual offshore use. Corrosion on interior surfaces has put stress on the glass, making it vulnerable to failure. Also, the heavily corroded bolts cannot be retorqued in routine maintenance.

As a result of these tests, Penberthy has developed a unique three-part coating, applied to the components before the gage is assembled, to provide unprecedented gage protection in offshore application. The Penberthy gage also includes a variety of unique design features to further extend gage life.

Durable coatings complement the effectiveness of inorganic zinc

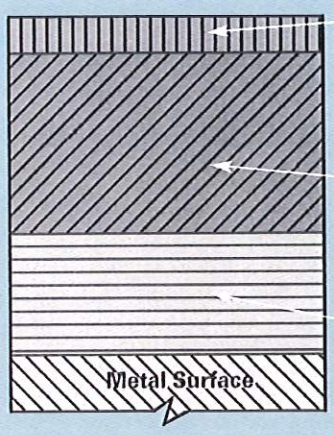

Polyurethane Top-Coat (2.5 to 3 mil)

Its glossy tile-like finish dramatically upgrades the weather resistance of the layered coatings. Provides excellent added protection from chemicals and abrasion as well.

Epoxy Tie-Coat (4 to 8 mil)

Epoxy polyamide complements the zinc primer by providing added abrasion resistance and protection from weathering. Also provides an effective base for the topcoat.

Inorganic Zinc Primer (2 to 3 mil)

This self-curing coating produces a tight bond to prepare surfaces and protects steel galvanically. Meets performance requirements of ANSI N 101.2-1972 and N 5.12-1974.

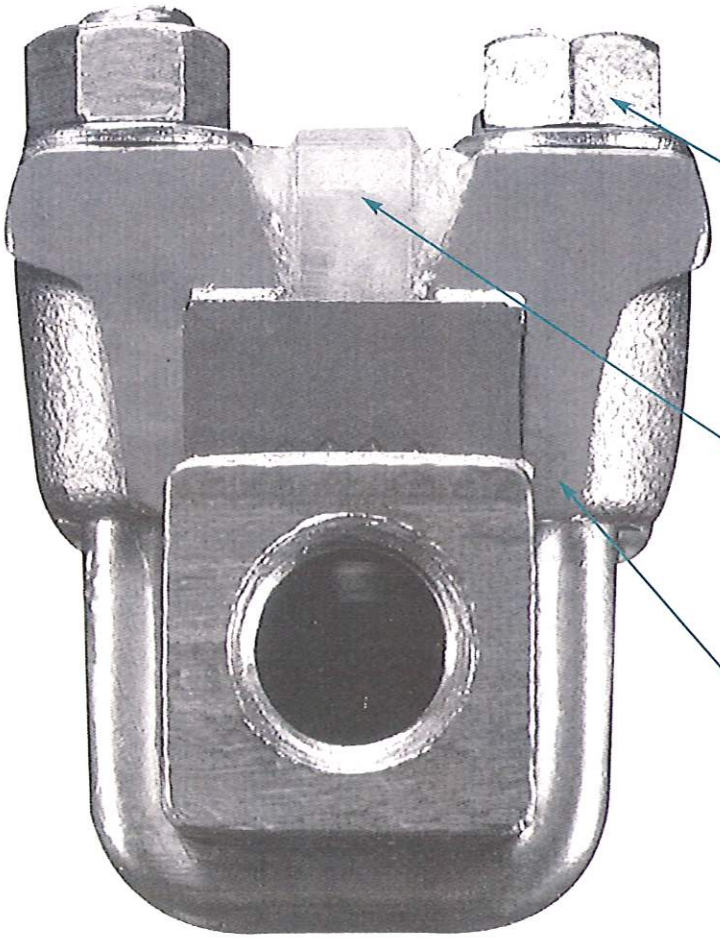

Three Protective Coatings

First, and prior to assembly, all metal parts are coated with a layer of sacrificial inorganic zinc. Then, after assembly, they are sprayed with an epoxy tie coat and urethane finish.

Stainless Steel Hardware

Nuts, bolts and washers are stainless steel to assure that they will never rust and that nuts can be periodically retorqued, as required. Washers, in turn, prevent the protective coatings on the cover from being scraped off.

Tough PMMA Panel

Attached with a durable silicone sealant, this strong clear polymethylmethacrylate panel fully protects the glass front from flying sand and debris. Illuminators for offshore gages are always type 4x and the PMMA wedge is sealed the same as the PMMA gage glass protecting panel.

Deep Wall Cover

Gage cover extends the full depth of the glass and protects it laterally from sandblasting and other abrasives from nearby installation and maintenance operations.

Copyright Pentair

Tubular Glass Gages

for cost effective level indication...

Penberthy Tubular Glass Gages are used to register liquid levels in low to medium pressure applications. They are externally mounted to the vessel and use tubular glass to provide direct visual verification of the liquid level present. The transparent glass also provides an excellent means to optically inspect fluid characteristics.

Liquid enters the gage through the lower tank connection. The meniscus present in the glass tube corresponds to the liquid level in the tank. Available accessories allow you to customize each gage to your specific application requirements. These options can also provide enhanced level indication and protection for the tubular glass.

Protectors

Tubular glass is susceptible to accidental breakage. To counteract this condition, Penberthy offers a variety of protectors. These protectors prevent damage to the glass, but do not restrict level indication capability. In some cases the protector actually enhances it. Protectors can be adapted to fit most major manufacturers' gagecocks.

Guard Rods – Two or four metallic rods placed next to the glass tube.

Plastic or Wire Glass – A transparent box surrounding the tubular glass constructed from either clear plastic or wire glass.

Sheet Metal – Two pieces of sheet metal formed to protect both sides of the tubular glass. The front and back are left open to facilitate easy viewing.

Refractive – An extruded aluminum channel with your choice of either a polymer or glass cover. The interior is a white anodized finish with 45° angle red stripes on the back wall. As the gage fills, liquid passes in front of the stripes. The refractive nature of the liquid changes the stripe angle showing the highly visible contrast between liquid presence and absence.

If water is the liquid used, the stripes become horizontal. Liquids with a refractive index less than water will alter the angle less, higher indexes will alter the angles more. The refractive protector is designed for use with standard tubular glass.

Internal Tubes

A stainless steel internal heating or cooling tube that passes through the length of the tubular glass can be used in conjunction with an offset pattern gagecock and high pressure glass.

Glass Union

Intended for use in gages over 48" in height. It allows you to join two pieces of glass within the same gage. This increases the length of the gage, yet maintains the same pressure/ temperature rating as the individual pieces of glass. Glass unions should be used in conjunction with the refractive protector to provide mechanical stability.



Wire Guard Rod



Refractive Protector



Refractive Protector (Glass Union)



Sheet Metal Protector

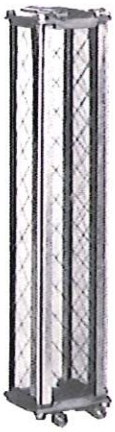

Wire Glass Protector

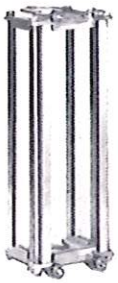

Plastic Protector

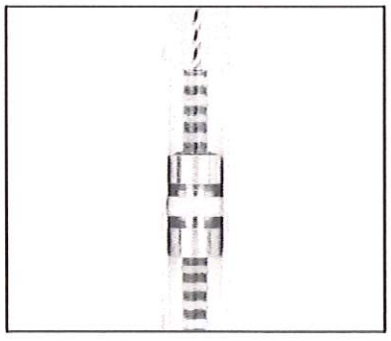

Glass Union

Copyright Pentair

Pressure/Temperature Ratings for Gages with a Single Piece of Tubular Glass (Both 5/8" and 3/4")						
Center to Center Distance For Vessel Connections	No Corrosion up to 150°F [66°C]			Steam Boiler Service Up to 425°F [218°C]		
	High Pressure	Heavy Wall	Red Line	High Pressure	Heavy Wall	Red Line
Inches [mm]	Psig [kPa]			Psig [kPa]		
10 [254]	410 [2830]	600 [4140]	340 [2340]	310 [2140]	345 [2380]	275 [1900]
15 [381]	385 [2650]	600 [4140]	310 [2140]	280 [1930]	325 [2240]	265 [1830]
20 [508]	355 [2450]	600 [4140]	285 [1960]	265 [1830]	315 [2170]	260 [1790]
25 [635]	300 [2070]	580 [4000]	260 [1790]	250 [1720]	300 [2070]	250 [1720]
30 [762]	275 [1900]	550 [3790]	230 [1590]			
35 [889]	240 [1650]	500 [3450]	200 [1380]			
40 [1016]	210 [1450]	420 [2890]	180 [1240]			
45 [1143]	200 [1380]	360 [2480]	170 [1170]	NOT RECOMMENDED		
50 [1270]	180 [1240]	340 [2340]	160 [1100]			
55 [1397]	150 [1030]	N/A	140 [970]			
60 [1524]	140 [970]	N/A	120 [830]			
65 [1651]	125 [860]	N/A	100 [690]			
70 [1778]	100 [690]	N/A	90 [620]			

Using secured Glass Unions and multiple pieces of tubular glass will increase the pressure/temperature rating over that of an equivalent length of single glass.

Temperature Ratings for Typical Packing Material	
Packing Type	Maximum Temperature Rating °F [°C]
Grafoil ® (Standard)	425 [218]
Teflon ®	425 [218]
Neoprene ®	300 [149]
Viton ®	400 [204]

Material Specifications for Glass Unions and Hydraulic Adapters			
Part	Steel	Brass	316 STS
Glass Union	X	X	X
Hydraulic Adapters	X	X	X

Options Available for the Different Types of Tubular Glass							
Glass Type (Both 5/8" and 3/4")	OPTIONS						
	Gagecocks	Hydraulic Adapters	Guard Rods	Plastic or Wire Glass Protector	Sheet Metal	Refractive Protector	Internal Tube
High Pressure	X	X	X	X	X	X	X
Heavy Wall	X	X	X	X	X		
Red Line	X	X	X	X	X		
Glass Union	X	X				X	X

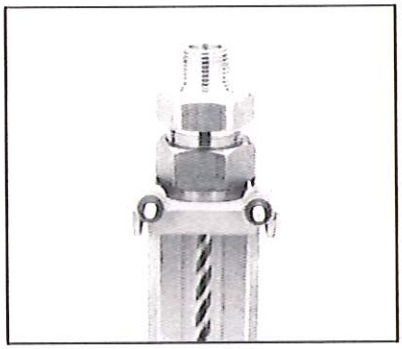

Hydraulic Adapter

Hydraulic Adapters

Hydraulic Adapters are used in place of gagecocks for connecting the gage to your vessel. They attach directly to the ends of the tubular glass, providing a 1/2" NPT male connection. This allows you to incorporate most standard hydraulic connections currently available.

Copyright Pentair

The Graph-a-Bond™ gasket: superior strength and better adhesion

Frustrated with GRAFOIL® gasket folding, flecking, denting and slipping? Penberthy has the answer – a graphite composite gasket that provides both superior strength to resist gasket deformation and better surface adhesion than commonly used graphite gaskets. (Concept is covered by US Pat# 5,895,058, other patents and proprietary data may pertain).

Penberthy has combined the grip of fibrous gasketing with the superior sealing and physical attributes of graphite to create a Graph-a-Bond™ gasket. It provides:

- Excellent chemical resistance
- Efficient conduction of thermal energy
- Stability at high temperatures
- Extremely low microporosity (leakage)
- "Springback" resilience to conform to curved and flat surfaces
- Reduced gasket blow-out

Penberthy has also attached a fibrous gasket (elastomeric binder) to the otherwise exposed graphite material to negate its natural lubricity and difficulty in handling. As a result, handling Penberthy's Graph-a-Bond gasket is much easier than conventional graphite gaskets, helping to eliminate the possibility of damage during gage assembly. The fibrous laminate also gives the graphite a higher degree of stiffness to resist deformation or bending better than graphite gaskets with polyester or metal inserts.

The Penberthy gasket is also ideal to retrofit onto aged chambers that have experienced rebuilds over the years and may leak if conventional graphite gaskets are used. Note that the Penberthy gasket fits any manufacturer's standard-size flat glass gage. Gasket material can be manufactured for use with other fittings including flanges.

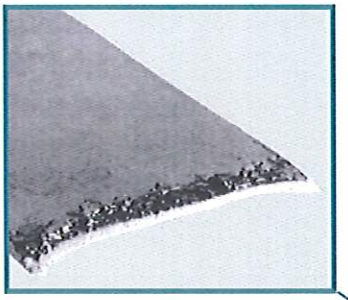

Cross-section of gasket, showing fibrous laminate providing stiffness and better handling characteristics

The laminate bonding is crucial to the success of this gasket form. It is a very thin combination of acrylonitrile and phenolic polymers. The acrylonitrile, a thermoplastic, provides the initial bonding at relatively low temperatures and during the heated pressure roller initial laminating phase. As temperature is increased during application, the acrylonitrile carbonizes and the phenolic, a thermosetting polymer, becomes the bonding agent. At extreme temperatures, the entire seal (binders, adhesives, etc.) turns carbonaceous with high bonding strength to the sealed members (the so-called "frying-on"). Once carbonaceous an effective seal can be maintained until such time as excessive mechanical shifting of the elements (due to pipe stresses, thermally induced movement, etc.) occurs.

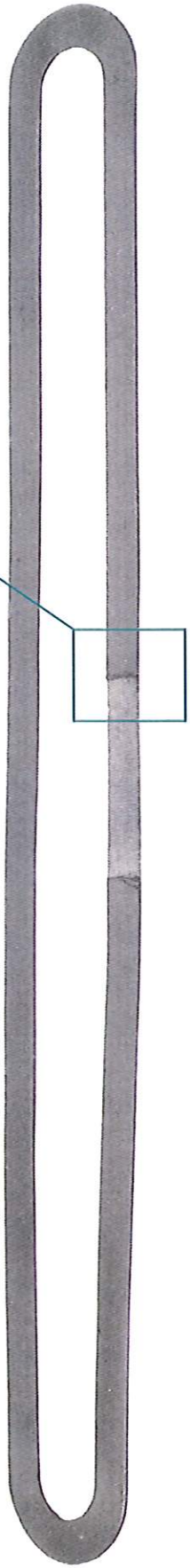

Copyright Pentair

NEW!

Gasketed Union Tailpipes

A Solution to Union Connection Leakage . . . . .

Penberthy now offers a metallic (AISI 304 stainless steel) spiral wound graphite gasket that fits in a precision machined groove in the union face of the gagecock body.

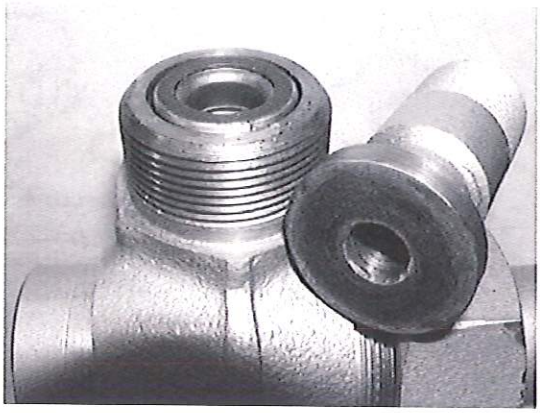

This gasket will compensate for any small misaligned plumbing connections and will provide a tight and effective seal. When experiencing larger misalignment problems, consider a spherical union connection.

This option will virtually eliminate leaks, reduce maintenance cost and will add to the overall safety of the installation.

For periodic maintenance, simply replace the gasket pre-form.

MODEL MATRIX		
	GAGE CONNECTION	VESSEL CONNECTION
X20	Metal Union (Standard)	Metal Union (Standard)
X21	Metal Union	*Gasketed Union*
X22	*Gasketed Union*	Metal Union
X23	*Gasketed Union*	*Gasketed Union*
X30	Rigid	Metal Union (Standard)
X31	Rigid	*Gasketed Union*

X = 100, 200, 300, 400, 500, 700, series gagecocks

If a gasket is needed on the gage connection only, use model number X22. For a vessel connection gasket only, use model nunber X21 or X31. For gasketed gage and vessel connections, use model number X23.

Examples:
Model 423 = 400 series gagecock with gasketed union gage and vessel connections.

Model 331 = 300 series gagecock with a rigid gage connection and a gasketed union vessel connection.

Copyright Pentair

Gagecocks: Flat Glass and Tubular Glass

Offset and straight pattern designs for flat glass and tubular glass gages

Penberthy offers offset and straight pattern gagecocks that isolate the gage chamber from the liquid contents of the vessel. Gagecock seat leakage is Class I per ISA RP39.6, FCI 70-2 (formerly ASME B16. 105) and/or IEC 60534-4.

Offset gagecocks have an advantage of permitting the inside of the gage glass to be cleaned easily with a minimum of disassembly. By removing the vent and drain plugs (or other connection), a straight passage through the gage chamber is opened. A brush can be inserted through the gagecock vent and drain for glass cleaning.

To prevent rapid loss of fluid in the event of accidental glass breakage, Penberthy supplies its gagecocks with automatic ball check shut-off. Should the glass break, the pressure drop causes the ball checks to seat to prevent loss of tank contents.

To unseat these ball checks during the liquid level readings, the tip of the gagecock stem has an extension that pushes the ball away from its seat while allowing the gage column to fill as liquid contents pass around the ball. Stainless steel retainers prevent reverse seating of balls or loss of balls during installation.

Both upper and lower gagecocks in each set are equipped with horizontal ball checks. Balls are located on the vessel side of the gagecock seats.

Gagecocks with ball checks omitted meet ASME boiler requirements. As an alternative method to ASME boiler requirements, the lower gagecock is available with an optional vertical rising ball check located in the offset portion of the gagecock body, and the upper gagecock has a leaky seat.

Gagecock Connections

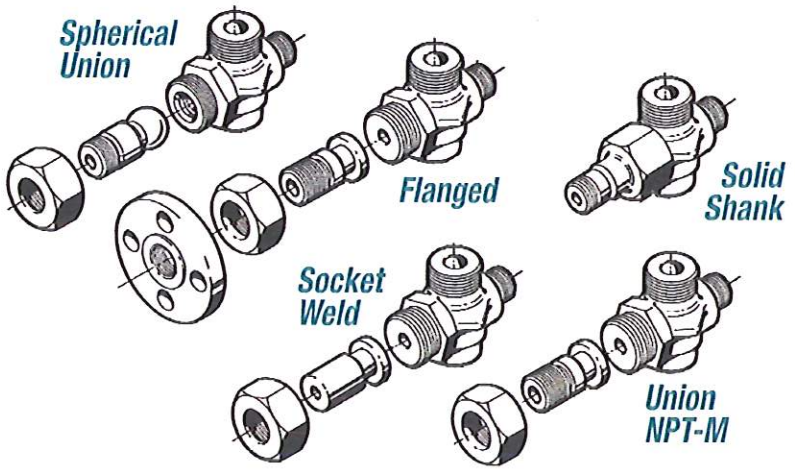

Gagecock Bodies

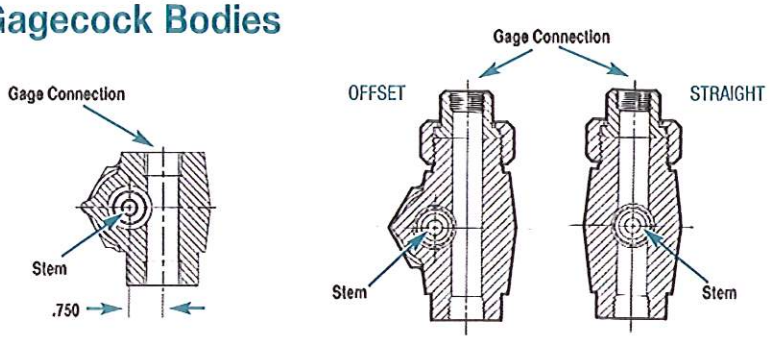

(x)30 Series Offset Pattern

(x)20 Series Offset and Straight Pattern

DIMENSIONS (Flat Glass)

To obtain the maximum length permissible for given vessel center-to-center dimension using 1/2" nipples:

Maximum Gage Length =
(Gagecock Center-to Center Dimension) - (Dimension X)

To determine the overall length of nipples needed to make up a gage set for fixed vessel center-to-center dimension using 1/2" nipples:

Combined Nipple Length =
(Gagecock Center-to-Center Dimension) - (Gage Length + Dimension Y)

Overall nipple length can be divided between nipples to suit the application. Minimum length required for each nipple is: 1-1/8" for 1/2" NPT nipple; 1-3/8" for 3/4" NPT nipple.

Penberthy Floating Shank union vessel connection permits gagecock center-to-center dimension to vary 3/8" [9.5 mm] total from actual vessel center-to-center dimension.

Copyright Pentair

Series 100, 200, 300, 400 and 600 Gagecocks

These gagecocks have inside screw threads that are wetted by the liquid. They are offered with a wide range of features in both straight and offset pattern designs (600 Series - offset only).

Series 500 and 700 Gagecocks - OS&Y

These are outside screw and yoke gagecocks that are used for high temperature or corrosive-liquid applications. The OS&Y design isolates the stem threads from the liquid. The stem seats in a reciprocative instead of a rotary fashion.

Series N2, K2, K3, N6 and N7 Gagecocks

Penberthy tubular glass gagecocks are for use in lower pressure applications. They are available with many of the same combinations of features described above for a range of uses, including union or solid shank vessel connections and a choice of stuffing box sizes for various glass diameters. All stuffing box connections are designed for positive seal with minimum radial compression. Both straight and offset pattern gagecocks are offered.

Standard Gagecock

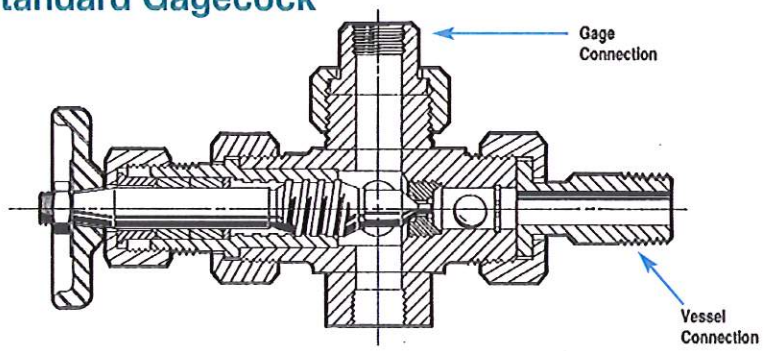

Vacuum Seat

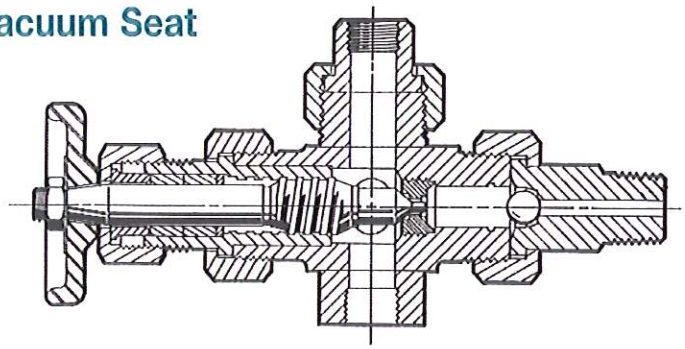

Backseating Stem

(Union Bonnet Gagecocks only)

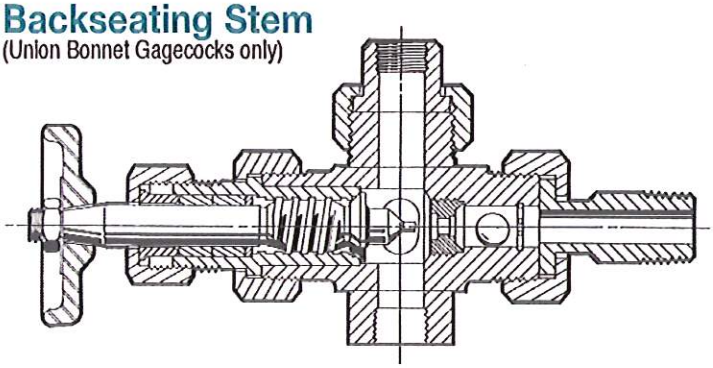

Vertically Rising Ball Check

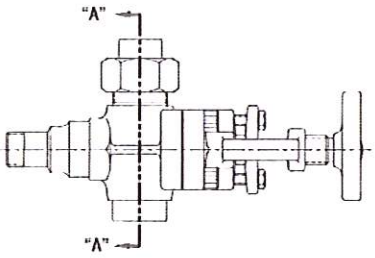

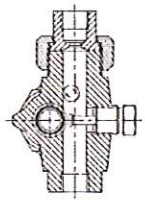

DIMENSIONS (Tubular Glass)

To obtain the length of glass tubing needed to make up gage set for given vessel center-to-center dimension:

Glass Tubing Length =
(Vessel Center-to-Center Dimension) - (Dimension X)

To obtain the length of guard rods for given gagecock center-to-center dimension:

Guard Rod Length =
(Gagecock Center-to-Center Dimension) - (Dimension Y)

Copyright Pentair

Straight Pattern Flat Glass Gagecocks

1500 lb. ANSI rating – Pressures to 4000 psi @ +100°F [27580 kPa @ +38°C]
Temperature Ranges from -300°F to +750°F [-184°C to +399°C]

Design Features

The 100 and 200 series includes models 120/220 and 130/230 with these standard features:

- Straight pattern
- Integral bonnet (100 series)
- Union bonnet (200 series)
- Union Vessel connection
- Gage connection
  Model 120/220 - Union
  Model 130/230 - Rigid
- Ball Check Shutoff
- Integral seat (100 series)
  Threaded renewable seat (200 series)

A variety of optional features are available when specified.

Optional materials can be specified for the gagecock body and trim. (Trim consists of the stem, stem packing retainer, ball check, and seat (200 series only)). Standard and optional materials conform to ASTM Specifications.

ASME Boiler Code

Series 100 and 200 gagecock sets that are acceptable for ASME Boiler Code are supplied with ball check shut-offs omitted.

Center-to-Center Dimensions (see p. 22)

Model	Dimension X inches [cm]	Dimension Y inches [cm]
120/220	5-5/8 [14.9]	3-3/8 [9.2]
130/230	2-5/8 [7.3]	3/8 [1.6]

Series 100

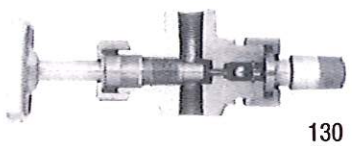

130

Series 200

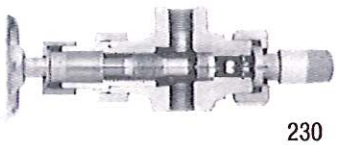

230

Standard/Optional Features

		120		220		130		230	
FEATURE		Std	Opt	Std	Opt	Std	Opt	Std	Opt
Pattern									
Straight		X		X		X		X	
Bonnet									
Integral		X				X			
Union				X				X	
Gage Connection									
Union	1/2" NPTF	X		X					
	1/2" NPTM		X		X				
	3/4" NPTF		X		X				
	3/4" NPTM		X		X				
Rigid	1/2" NPTF					X		X	
	3/4" NPTF						X		X
Socketweld	1/2" Female		X		X		X		X
	1/2" Male		X		X				
	3/4" Male		X		X				
	3/4" Female						X		X
Flanged			X		X		X		X
Spherical Union	1/2" NPTF		X		X				
	1/2" NPTM		X		X				
	3/4" NPTM		X		X				
Vessel Connection									
Union	1/2" NPTF		X		X		X		X
	1/2" NPTM		X		X		X		X
	3/4" NPTM	X		X		X		X	
	1" NPTM (non floating)		X		X		X		X
Solid Shank	1/2" NPTM		X		X		X		X
	3/4" NPTM		X		X		X		X
	1" NPTM		X		X		X		X
Socketweld	1/2" Male		X		X		X		X
	3/4" Male		X		X		X		X
	1" Male		X		X		X		X
Flanged Spherical Union			X		X		X		X
	1/2" NPTF		X		X		X		X
	1/2" NPTM		X		X		X		X
	3/4"NPTM		X		X		X		X
Vent/Drain Connection									
1/2" NPTF		X		X		X		X	
3/4" NPTF			X		X		X		X
Ball Check Shut-Off									
Horizontal Lower and Upper Gagecocks		X		X		X		X	
*Omitted **			X		X		X		X
Vacuum - Horizontal Upper and Lower			X		X		X		X
Seat									
Integral		X				X			
Threaded (Renewable)				X				X	
Backseating Stem					X				X
Handwheel									
w/ Standard Pitch Threads		X		X		X		X	
w/ Quick Closing Thread			X		X		X		X
Lever									
w/ Quick Closing Thread (1/4 turn)			X		X		X		X

* Acceptable for ASME Service

Pressure/Temperature

Construction	Maximum working pressure, psi [kPa] at temperatures to-										
	-300°F [-184°C] psi [kPa]	-150°F [-101°C] psi [kPa]	-20°F [-29°C] psi [kPa]	100°F [38°C] psi [kPa]	200°F [93°C] psi [kPa]	300°F [149°C] psi [kPa]	400°F [204°C] psi [kPa]	500°F [260°C] psi [kPa]	550°F [288°C] psi [kPa]	750°F [399°C] psi [kPa]
Forged Steel			4000 [27580]	4000 [27580]	3900 [26890]	3815 [26300]	3730 [25720]	3525 [24300]	3355 [23130]	2620 [18060]
Stainless Steel	4000 [27580]	4000 [27580]	4000 [27580]	4000 [27580]	3900 [26890]	3815 [26300]	3730 [25720]	3525 [24300]	3355 [23130]	2755 [18990]

Copyright Pentair

Offset Pattern Flat Glass Gagecocks

1500 lb. ANSI rating – Pressures to 4000 psi @ +100°F [27580 kPa @ +38°C]
Temperature Ranges from -300°F to +750°F [-184°C to +399°C]

Design Features

The 300 and 400 series includes models 320/420 and 330/430 with these standard features:

- Offset pattern
- Integral bonnet (300 series)
- Union bonnet (400 series)
- Union vessel connection
- Gage connection
  Model 320/420 - Union
  Model 330/430 - Rigid
- Ball Check Shutoff
- Integral seat (300 series)
  Threaded renewable seat (400 series)

A Variety of optional features are available when specified.

Optional materials can be specified for the gagecock body and trim. (Trim consists of the stem, stem packing retainer, ball check, and seat (400 series only)). Standard and optional materials conform to ASTM Specifications.

ASME Boiler Code

Series 300 and 400 gagecock sets that are acceptable for ASME Boiler Code are available as an option. Model 320/420 gagecock sets with this option can be supplied either with ball check shutoffs or with them omitted. Model 330/430 gagecock sets with this option have the ball check shutoffs omitted.

Series 300

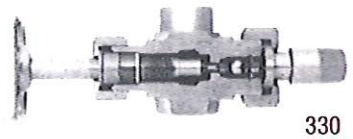

330

Series 400



430

Standard/Optional Features

FEATURE		320 Std	320 Opt	420 Std	420 Opt	330 Std	330 Opt	430 Std	430 Opt
Pattern									
Offset		X		X		X		X	
Bonnet									
Integral		X				X			
Union				X				X	
Gage Connection									
Union	1/2" NPTF	X		X					
	1/2" NPTM		X		X				
	3/4" NPTF		X		X				
	3/4" NPTM		X		X				
Rigid	1/2" NPTF					X		X	
	3/4" NPTF						X		X
Socketweld	1/2" Female		X		X		X		X
	1/2" Male		X		X				
	3/4" Male		X		X				
	3/4" Female						X		X
Flanged			X		X		X		X
Spherical Union	1/2" NPTF		X		X				
	1/2" NPTM		X		X				
	3/4" NPTM		X		X				
Vessel Connection									
Union	1/2" NPTF		X		X		X		X
	1/2" NPTM		X		X		X		X
	3/4" NPTM	X		X		X		X	
	1" NPTM (non floating)		X		X		X		X
Solid Shank	1/2" NPTM		X		X		X		X
	3/4" NPTM		X		X		X		X
	1" NPTM		X		X		X		X
Socketweld	1/2" Male		X		X		X		X
	3/4" Male		X		X		X		X
	1" Male		X		X		X		X
Flanged			X		X		X		X
Spherical Union	1/2" NPTF		X		X		X		X
	1/2" NPTM		X		X		X		X
	3/4"NPTM		X		X		X		X
Vent/Drain Connection									
1/2" NPTF		X		X		X		X	
3/4" NPTF			X		X		X		X
Ball Check Shut-Off									
Horizontal Lower and Upper Gagecocks		X		X		X		X	
*Vertical Lower/Horizontal Upper Gagecock **			X		X				
*Omitted **			X		X		X		X
Vacuum - Horizontal Upper and Upper			X		X		X		X
Seat									
Integral		X				X			
Threaded (Renewable)				X				X	
Backseating Stem					X				X
Handwheel									
w/ Standard Pitch Threads		X		X		X		X	
w/ Quick Closing Thread			X		X		X		X
Lever									
w/ Quick Closing Thread (1/4 turn)			X		X		X		X

* Acceptable for ASME Service

Center-to-Center Dimensions (see p. 22)

Model	Dimension X inches [cm]	Dimension Y inches [cm]
320/420	5-5/8 [14.9]	3-3/8 [9.2]
330/430	2-5/8 [7.3]	3/8 [1.6]

Pressure/Temperature

Construction	-300°F [-184°C] psi [kPa]	-150°F [-101°C] psi [kPa]	-20°F [-29°C] psi [kPa]	100°F [38°C] psi [kPa]	200°F [93°C] psi [kPa]	300°F [149°C] psi [kPa]	400°F [204°C] psi [kPa]	500°F [260°C] psi [kPa]	550°F [288°C] psi [kPa]	750°F [399°C] psi [kPa]
	Maximum working pressure, psi (kPa) at temperatures to-									
Forged Steel			4000 [27580]	4000 [27580]	3900 [26890]	3815 [26300]	3730 [25720]	3525 [24300]	3355 [23130]	2620 [18060]
Stainless Steel	4000 [27580]	4000 [27580]	4000 [27580]	4000 [27580]	3900 [26890]	3815 [26300]	3730 [25720]	3525 [24300]	3355 [23130]	2755 [18990]

Copyright Pentair

Straight Pattern/OS&Y Flat Glass Gagecocks

1500 lb. ANSI rating – Pressures to 4000 psi @ +100°F [27580 kPa @ +38°C]
Temperature Ranges from -20°F to +750°F [-29°C to +399°C]

Design Features

The 500 series includes models 520 and 530 with these standard features:

- Straight pattern
- Outside screw and yoke
- Solid shank vessel connection
- Gage connection
  Model 520 - Union
  Model 530 - Rigid
- Ball Check Shutoff
- Threaded renewable seat
- Backseating stem

A variety of optional features are available when specified.

Optional materials can be specified for the gagecock body and trim. (Trim consists of the stem, stem packing retainer, ball check, and seat.) Standard and optional materials conform to ASTM Specifications.

ASME Boiler Code

Series 500 gagecock sets that are acceptable for ASME Boiler Code are available as an option. Gagecock sets with this option are supplied with ball check shut-offs omitted.

Series 500

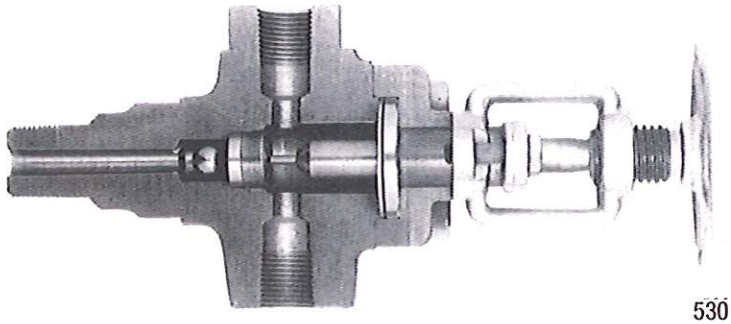

530

Standard/Optional Features

FEATURE		520 Std	520 Opt	530 Std	530 Opt
Pattern					
Straight		X		X	
OS&Y					
OS&Y		X		X	
Gage Connection					
Union	1/2" NPTF	X			
	1/2" NPTM		X		
	3/4" NPTF		X		
	3/4" NPTM		X		
Rigid	1/2" NPTF			X	
	3/4" NPTF				X
Socketweld	1/2" Female		X		X
	1/2" Male		X		
	3/4" Male		X		
	3/4" Female				X
Flanged			X		X
Spherical Union	1/2" NPTF		X		
	1/2" NPTM		X		
	3/4" NPTM		X		
Vessel Connection (Solid Shank)					
Threaded	1/2" NPTM		X		X
	3/4" NPTM	X		X	
	1" NPTM		X		X
Socketweld	1/2" Male		X		X
	3/4" Male		X		X
	1" Male		X		X
Flanged			X		X
Vent/Drain Connection					
1/2" NPTF		X		X	
3/4" NPTF			X		X
Ball Check Shut-Off					
Horizontal Lower and Upper Gagecocks		X		X	
*Omitted **			X		X
Seat					
Threaded (Renewable)		X		X	
Backseating Stem		X		X	
Handwheel					
w/ Standard Pitch Threads		X		X	
w/ Quick Closing Thread (1/4 turn)			X		X

* Acceptable for ASME Service

Center-to-Center Dimensions (see p. 22)

Model	Dimension X inches [cm]	Dimension Y inches [cm]
520	6-3/8 [16.8]	4-1/8 [11.1]
530	4-3/8 [11.7]	2-1/8 [6.0]

Pressure/Temperature

Construction	Maximum working pressure, psi [kPa] at temperatures to- -20°F [-29°C] psi [kPa]	100°F [38°C] psi [kPa]	200°F [93°C] psi [kPa]	300°F [149°C] psi [kPa]	400°F [204°C] psi [kPa]	500°F [260°C] psi [kPa]	550°F [260°C] psi [kPa]	750°F [399°C] psi [kPa]
Forged Steel	4000 [27580]	4000 [27580]	3900 [26890]	3815 [26300]	3730 [25720]	3525 [24300]	3355 [23130]	2620 [18060]
Stainless Steel	4000 [27580]	4000 [27580]	3900 [26890]	3815 [26300]	3730 [25720]	3525 [24300]	3355 [23130]	2755 [18990]

Copyright Pentair

Offset Pattern/OS&Y Flat Glass Gagecocks

1500 lb. ANSI rating - Pressures to 4000 psi @ +100°F [27580 kPa @ +38°C]
Temperature Ranges from -20°F to +750°F [-29°C to +399°C]

Design Features

The 700 series includes models 720, 730 and 780 with these standard features:

- Offset pattern
- Outside screw and yoke
- Solid shank vessel connection
- Gage connection
  Model 720 - Union
  Model 730 - Rigid
  Model 780 - Stuffing Box
- Ball Check Shutoff
- Threaded renewable seat
- Backseating Stem

A Variety of optional features are available when specified.

Optional materials can be specified for the gagecock body and trim. (Trim consists of the stem, stem packing retainer, ball check and seat.) Standard and optional materials conform to ASTM Specifications.

ASME Boiler Code

Series 700 gagecock sets that are acceptable for ASME Boiler Code are available as an option. Ball check shut-offs can be omitted; or the Model 720 and 780 can have a vertical rising lower ball check and horizontal, leaky upper ball check.

Center-to-Center Dimensions (see p. 22)

Model	Dimension X inches [cm]	Dimension Y inches [cm]
720	6-3/8 [16.8]	4-1/8 [11.1]
730	4-3/8 [11.7]	2-1/8 [6.0]

Series 700

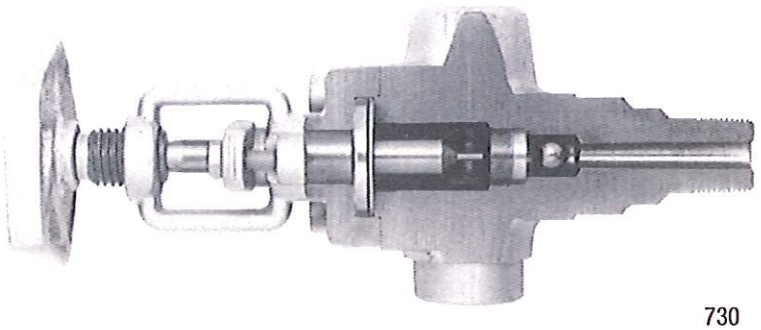

730

Standard/Optional Features

FEATURE		720 Std	720 Opt	730 Std	730 Opt	780 Std	780 Opt
Pattern							
Offset		X		X		X	
OS&Y							
OS&Y		X		X		X	
Gage Connection							
Union	1/2" NPTF	X					
	1/2" NPTM		X				
	3/4" NPTF		X				
	3/4" NPTM		X				
Rigid	1/2" NPTF			X			
	3/4" NPTF				X		
Socketweld	1/2" Female		X		X		
	1/2" Male		X				
	3/4" Female				X		
	3/4" Male		X				
Flanged			X		X		
Spherical Union	1/2" NPTF		X				
	1/2" NPTM		X				
	3/4" NPTM		X				
Stuffing Box	3/4" Adapter Diameter					X	
Vessel Connection (Solid Shank)							
Threaded	1/2" NPTM		X		X		X
	3/4" NPTM	X		X		X	
	1" NPTM		X		X		X
Socketweld	1/2" Male		X		X		X
	3/4" Male		X		X		X
	1" Male		X		X		X
Flanged			X		X		X
Vent/Drain Connection							
1/2" NPTF		X		X		X	
3/4" NPTF			X		X		X
Ball Check Shut-Off							
Horizontal Lower and Upper Gagecocks		X		X		X	
*Vertical Lower/Horizontal Upper Gagecocks**			X				X
*Omitted **			X		X		X
Seat							
Threaded (Renewable)		X		X		X	
Backseating Stem		X		X		X	
Handwheel							
w/ Standard Pitch Threads		X		X		X	
w/ Quick Closing Thread (1/4 turn)			X		X		X

* Acceptable for ASME Service

Pressure/Temperature

Construction	Maximum working pressure, psi [kPa] at temperatures to- -20°F [-29°C] psi [kPa]	100°F [38°C] psi [kPa]	200°F [93°C] psi [kPa]	300°F [149°C] psi [kPa]	400°F [204°C] psi [kPa]	500°F [260°C] psi [kPa]	550°F [260°C] psi [kPa]	750°F [399°C] psi [kPa]
Forged Steel	4000 [27580]	4000 [27580]	3900 [26890]	3815 [26300]	3730 [25720]	3525 [24300]	3355 [23130]	2620 [18060]
Stainless Steel	4000 [27580]	4000 [27580]	3900 [26890]	3815 [26300]	3730 [25720]	3525 [24300]	3355 [23130]	2755 [18990]

Copyright Pentair

OS&Y Fugitive Emission Gagecocks

1500 lb. ANSI rating -- Pressures to 4000 psi @ +100°F [27580 kPa @ +38°C]
Temperature Ranges from -20°F to +400°F [-29°C to +204°C]

The "Arrestor" Fugitive Emission Gagecock

Environmental pollution is a global issue. Environmental regulations impacting plant operations include gagecocks. The "ARRESTOR" OS&Y gagecock is utilized with gage glass, mag gage or other apparatus when process fluid vapors or gases are considered to be environmentally harmful.

Penberthy's "ARRESTOR" gagecocks are individually serialized and tested to meet EPA emission test requirements. Each (550/750 gagecock) is shipped with its individual test report that certifies less than 5 ppm methane equivalent leak rates using Kalrez® packing. Kalrez®/Zymaxx™, API 607 III Edition Fire Test qualified, is a packing material option.

Models 551/751 are available with type-accepted packing, rated to leak rates of 500 ppm methane equivalent.

Optional materials of construction can be specified for the gagecock body and trim. (Trim consists of the stem, stem packing retainer, ball and seat.) Reference Penberthy Material Specification sheets for optional materials.

Series 550/750

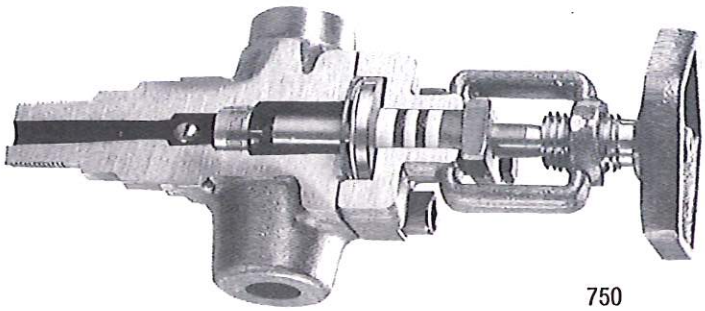

750

Standard/Optional Features

		550/551		750/751	
FEATURE		Std	Opt	Std	Opt
Pattern					
Straight		X			
Offset				X	
OS&Y					
OS&Y		X		X	
Gage Connection					
Socketweld	1/2" Female	X		X	
	3/4" Female		X		X
Rigid	1/2" NPTF		X		X
	3/4" NPTF		X		X
Flanged			X		X
Vessel Connection (Solid Shank)					
Socketweld	1/2" Male		X		X
	3/4" Male	X		X	
	1" Male		X		X
Threaded	1/2" NPTM		X		X
	3/4" NPTM		X		X
	1" NPTM		X		X
Flanged			X		X
Vent/Drain Connection					
Socketweld	1/2" Female	X		X	
	3/4" Female		X		X
Threaded	1/2" NPTF		X		X
	3/4" NPTF		X		X
Ball Check Shut-Off					
Horizontal Lower and Upper Gagecocks		X		X	
Ball Checks Omitted			X		X
Seat					
Threaded (Renewable)		X		X	
Backseating Stem		X		X	
Handwheel					
w/ Standard Pitch Threads		X		X	
w/ Quick Closing Thread (1/4 turn)			X		X

Pressure/Temperature

Construction	Maximum working pressure, psi [kPa] at temperatures to-				
	-20°F [-29°C] psi [kPa]	100°F [38°C] psi [kPa]	200°F [93°C] psi [kPa]	300°F [149°C] psi [kPa]	400°F [204°C] psi [kPa]
Forged Steel	4000 [27580]	4000 [27580]	3900 [26890]	3815 [26300]	3730 [25720]
Stainless Steel	4000 [27580]	4000 [27580]	3900 [26890]	3815 [26300]	3730 [25720]

Copyright Pentair

Offset Pattern Flat Glass Gagecocks

Pressures to 6000 psi @ +250°F [41370 kPa @ +121°C]
Temperature Ranges from -50°F to +250°F [-46°C to +121°C]

Design Features

The 600 series includes model 630 with these standard features:

- Offset pattern
- Union bonnet
- Union vessel connection
- Rigid gage connection
- Ball Check Shutoff
- Threaded renewable seat
- Backseating Stem

A Variety of optional features are available when specified.

Optional materials can be specified for the gagecock body and trim. (Trim consists of the stem, stem packing retainer, ball check and seat.) Standard and optional materials conform to ASTM Specifications.

Pressure/Temperature Range

Model 630 gagecocks are rated for pressures up to 6000 psi [41370 kPa] over a temperature range of -50°F to +250°F [-46°C to +121°C]. Optional o-ring materials for vessel tailpipe can be used to increase temperature capability.

Center-to-Center Dimensions (see p. 22)

Model	Dimension X inches [cm]	Dimension Y inches [cm]
630	3-1/8 [8.6]	7/8 [2.9]

Series 600

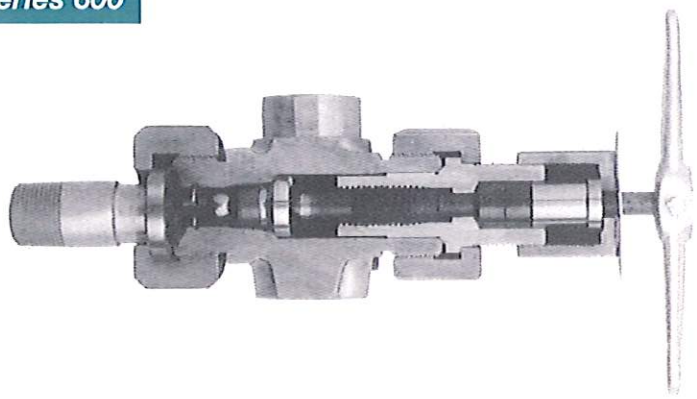

Standard/Optional Features

		630	
FEATURE		Std	Opt
Pattern			
Offset		X	
Bonnet			
Union		X	
Rigid Gage Connection			
Threaded	1/2" NPTF	X	
	3/4" NPTF		X
Socketweld	1/2" Female		X
	3/4" Female		X
Flanged			X
Vessel Connection			
Union	1/2" NPTM		X
	3/4" NPTM	X	
	1" NPTM		X
Solid Shank	1/2" NPTM		X
	3/4" NPTM		X
	1" NPTM		X
Socketweld	1/2" Male		X
	3/4" Male		X
	1" Male		X
Flanged			X
Vent/Drain Connection			
3/8" NPTF		X	
1/2" NPTF			X
3/4" NPTF			X
Ball Check Shut-Off			
Horizontal Lower and Upper Gagecocks		X	
Omitted *			X
Seat			
Threaded (Renewable)		X	
Backseating Stem		X	
Lever			
w/ Standard Pitch Threads		X	
w/ Quick Closing Thread (1/4 turn)			X

* Acceptable for ASME Service

Copyright Pentair

Offset Pattern Tubular Glass Gagecocks

300 lb. ANSI rating - Pressures to 750 psi @ +100°F [5170 kPa @ +38°C]
Temperature Ranges from -300°F to +750°F [-184°C to +399°C]

Design Features

The N2 and K2 series include models N2A/K2A, N2B/K2B and N2C/K2C with these standard features:

- Offset Pattern
- Integral bonnet (N2 series)
  Union bonnet (K2 series)
- Union vessel connection
- Stuffing Box gage connection
- Ball check shutoff
- Integral seat (N2 series)
  Threaded renewable seat (K2 series)

A variety of optional features are available when specified.

Optional materials can be specified for the gagecock body and trim. (Trim consists of the stem, stem packing retainer, ball check, and seat (K2 series only)). Standard and optional materials conform to ASTM Specifications.

ASME Boiler Code

Series N2 and K2 gagecock sets that are acceptable for ASME Boiler Code are available as an option.

For steam/water service in excess of 350 psi [2400 kPa], transparent flat glass gages with tubular adapters and shields are recommended.

Center-to-Center and Guard Rod Dimensions

(see p. 23)

Model	Dimension X inches [cm]	Dimension Y inches [cm]
All Models	1-7/8 [4.8]	2-3/8 [6.0]

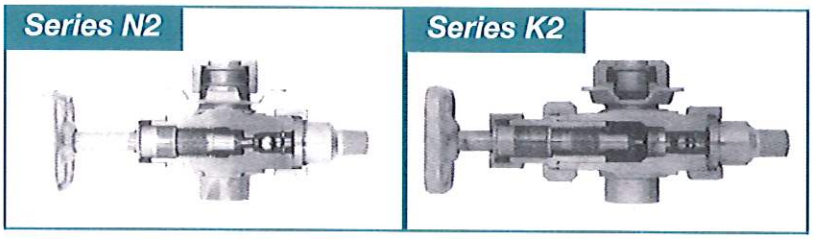

Standard/Optional Features

FEATURE		N2A Std	N2A Opt	K2A Std	K2A Opt	N2B Std	N2B Opt	K2B Std	K2B Opt	N2C Std	N2C Opt	K2C Std	K2C Opt
Pattern													
Offset		X		X		X		X		X		X	
Bonnet													
Integral		X				X				X			
Union				X				X				X	
Gage Connection													
Stuffing Box	5/8" Glass Diameter	X		X									
	3/4" Glass Diameter					X		X		X		X	
Vessel Connection													
Union	1/2" NPTM	X		X									
	3/4" NPTM					X		X					
	1" NPTM (non-floating)									X		X	
Solid Shank	1/2" NPTM		X		X		X		X		X		X
	3/4" NPTM		X		X		X		X		X		X
	1"NPTM		X		X		X		X		X		X
Socketweld	1/2" Male		X		X								
	3/4" Male						X		X				
	1" Male										X		X
Flanged			X		X		X		X		X		X
Spherical Union	1/2" NPTM		X		X								
	3/4" NPTM						X		X				
Vent Connection													
3/4" NPTF		X		X		X		X		X		X	
Drain Connection													
1/2" NPTF		X		X		X		X		X		X	
Ball Check Shut-Off													
Horizontal Lower and Upper Gagecocks		X		X		X		X		X		X	
*Vertical Lower/Horizontal Upper Gagecocks**			X		X		X		X		X		X
*Omitted**			X		X		X		X		X		X
Vacuum - Horizontal Upper and Lower			X		X		X		X		X		X
Seat													
Integral		X				X				X			
Threaded (Renewable)				X				X				X	
Backseating				X				X				X	
Handwheel													
w/Standard Pitch Threads		X		X		X		X		X		X	
w/Quick Closing Threads			X		X		X		X		X		X
Lever													
w/Quick Closing Thread (1/4 turn)			X		X		X		X		X		X
Guard Rods (4 per gagecock set)													
1/4" [6.4 mm] diameter			X		X		X		X		X		X

* Acceptable for ASME Service

Pressure/Temperature

(Subject to limitations of tubular glass)

MODEL	Maximum working pressure, psi [kPa] at temperatures to- -300°F [-184°C] psi [kPa]	-20°F [-29°C] psi [kPa]	100°F [38°C] psi [kPa]	300°F [149°C] psi [kPa]	400°F [204°C] psi [kPa]	500°F [260°C] psi [kPa]	750°F [399°C] psi [kPa]
Steel & 316 STS *N2A/K2A*	675 [4650]	675 [4650]	675 [4650]	610 [4210]	590 [4070]	555 [3830]	400 [2760]
Steel & 316 STS *N2B/K2B, N2C/K2C*	750 [5170]	750 [5170]	750 [5170]	675 [4650]	655 [4520]	610 [4210]	450 [3100]

Copyright Pentair

Offset Pattern Tubular Glass Gagecocks

300 lb. ANSI rating – Pressures to 500 psi @ +100°F [3450 kPa @ +38°C]
Temperature Range from -20°F to +550°F [-29°C to +288°C]

Design Features

The K3 series include models K3A (150 lb. ASA) and K3B (300 lb. ASA) with these standard features:

- Offset pattern
- Union bonnet
- Rigid vessel connection
- Stuffing box gage connection
- Ball check shutoff
- Backseating stem
- Drain cock furnished

A variety of optional features are available when specified.

Optional materials can be specified for the gagecock trim. (Trim consists of the stem, stem packing retainer and ball check.) Standard and optional materials conform to ASTM Specifications.

ASME Boiler Code

Series K3 gagecock sets that are acceptable for ASME Boiler Code are available as an option. These gagecock valve sets have a vertical rising ball check shut-off in the lower gagecock and a horizontal leaky ball seat in the upper gagecock.

Center-to-Center and Guard Rod Dimensions

(see p. 23)

Model	Dimension X inches [cm]	Dimension Y inches [cm]
All Models	2 [5.1]	2-1/8 [5.4]

Series K3

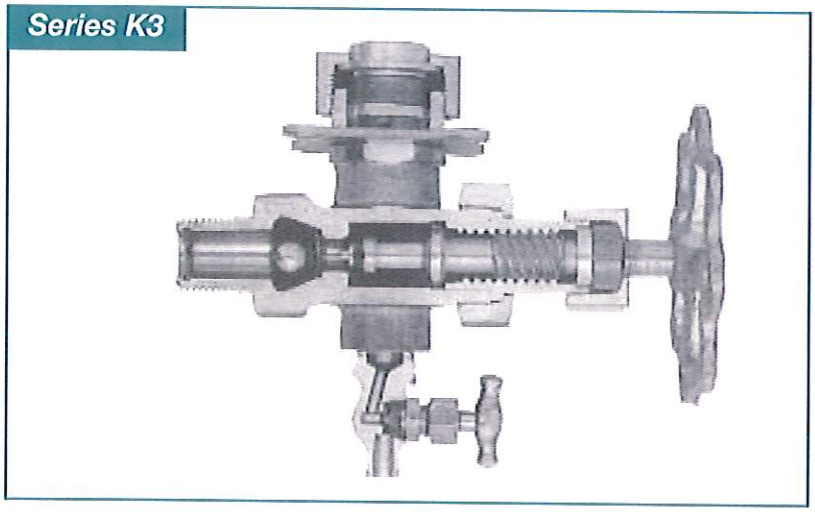

Standard/Optional Features

FEATURE		K3A Std	K3A Opt	K3B Std	K3B Opt
Pattern					
Offset		X		X	
Bonnet					
Union		X		X	
Gage Connection					
Stuffing Box	5/8" Glass Dia.	X			
	3/4" Glass Dia.			X	
Vessel Connection (Solid Shank)					
Threaded	1/2" NPTM	X			
	3/4" NPTM			X	
Socketweld	1/2" Male		X		
	3/4" Male				X
Flanged			X		X
Drain Connection					
3/8" NPTF		X		X	
Ball Check Shut-Off					
Horizontal Lower and Upper Gagecocks		X		X	
*Vertical Lower/Horizontal Upper Gagecock**			X		X
*Omitted**			X		X
Seat					
Integral		X		X	
Backseating Stem		X		X	
Handwheel					
w/Quick Closing Threads (1/4 turn)		X		X	
Lever					
Lever			X		X
Drain Cock					
Furnished		X		X	
Guard Rods (4 per gagecock set)					
1/4" [6.4 mm] diameter			X		X

* Acceptable for ASME Service

Pressure/Temperature

(Subject to limitations of tubular glass)

MODEL	Maximum working pressure, psi [kPa] at temperatures to- -20°F [-29°C] psi [kPa]	100°F [38°C] psi [kPa]	200°F [93°C] psi [kPa]	300°F [149°C] psi [kPa]	400°F [204°C] psi [kPa]	500°F [260°C] psi [kPa]	550°F[288°C] psi [kPa]	Max. Steam Pressure psi [kPa]
K3A	225 [1550]	225 [1550]	215 [1480]	190 [1310]	170 [1170]	150 [1030]		175 [1210]
K3B	500 [3450]	500 [3450]	475 [3270]	425 [2930]	375 [2580]	325 [2240]	300 [2070]	360 [2480]

Copyright Pentair

Straight Pattern Tubular Glass Gagecocks

125 lb. ANSI rating – Pressures to 200 psi @ +100°F [1380 kPa @ +38°C]
Temperature Range from -20°F to +400°F [-29°C to +204°C]

Design Features

The N6 series consists of model N6A with these standard features:

- Straight pattern
- Integral bonnet
- Rigid vessel connection
- Stuffing box gage connection
- Ball check shutoff
- Drain cock furnished

A variety of optional features are available when specified.

Optional materials can be specified for the gagecock trim. (Trim consists of the stem, stem packing retainer and ball check.) Standard and optional materials conform to ASTM Specifications.

Steam Service

Series N6 gagecock sets for steam service are available as an option.

Center-to-Center and Guard Rod Dimensions

(see p. 23)

Model	Dimension X inches [cm]	Dimension Y inches [cm]
N6A	1-5/8 [4.1]	+ 1/2 [1.3]

Series N6

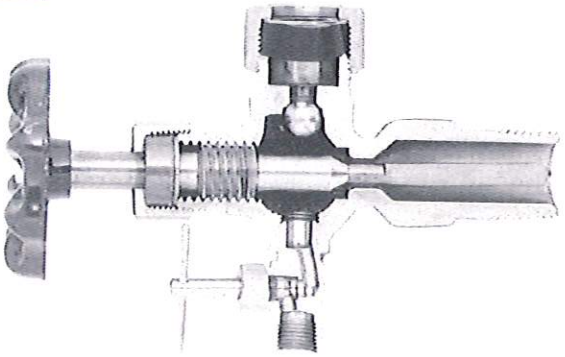

Standard/Optional Features

FEATURE	N6A Std	N6A Opt
Pattern		
Straight	X	
Bonnet		
Integral	X	
Gage Connection		
Stuffing Box 5/8" Glass Dia.	X	
Vessel Connection (Solid Shank)		
Threaded 1/2" NPTM	X	
Socketweld 1/2" Male		X
Flanged		X
Drain Connection		
3/8" NPTF	X	
Ball Check Shut-Off		
Verticle Lower/Horizontal Upper Gagecock	X	
*Vertical Lower/Horizontal Upper (Steam service Seat)**		X
*Omitted**		X
Seat		
Integral	X	
Handwheel		
w/Standard Pitch thread	X	
Drain Cock		
Furnished	X	
Guard Rods (2 per gagecock set)		
3/16" [4.8mm] diameter		X

* Acceptable for ASME Service

Pressure/Temperature (Subject to limitations of tubular glass)

MODEL	Maximum working pressure, psi [kPa] at temperatures to- WITH STANDARD NEOPRENE GLASS PACKING -20°F [-29°C] psi [kPa]	100°F [38°C] psi [kPa]	200°F [93°C] psi [kPa]	300°F [149°C] psi [kPa]	WITH OPTIONAL TEFLON GLASS PACKING 400°F [204°C] psi [kPa]	Max. Steam Pressure psi [kPa]
N6A	200 [1380]	200 [1380]	190 [1310]	165 [1100]	125 [860]	125 [860]

Copyright Pentair

Straight Pattern Tubular Glass Gagecocks

Pressures to 500 psi @ +100°F [3450 kPa @ +38°C]
Temperature Range from -20°F to +500°F [-29°C to +260°C]

Design Features

The N7 series include models N7A and N7B with these design features:

- Straight pattern
- Integral bonnet
- Rigid vessel connection
- Stuffing box gage connection
- Ball check shutoff
- Integral drain cock

A variety of optional features are available when specified.

Combinations of optional features and materials are available. Each combination is designated by the model number in the Features table. Optional materials can be specified for the gagecock body and trim. (Trim consists of the stem, stem packing retainer and ball check.) Standard and optional materials are available for service as described by ASTM Specifications.

ASME Boiler Code

Series N7 gagecock sets that are acceptable for ASME Boiler Code are available as an option. These gagecock sets have a vertical rising ball check shut-off in the lower gagecock and a horizontal ball in the upper gagecock.

Center-to-Center and Guard Rod Dimensions

(see p. 23)

Model	Dimension X inches [cm]	Dimension Y inches [cm]
All Models	2 [5.1]	3/4 [1.9]

Series N7

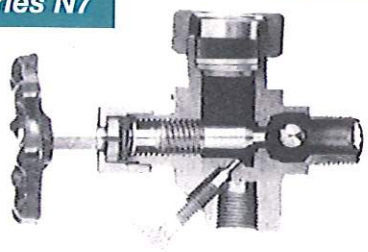

Standard/Optional Features

FEATURE		N7A Std	N7A Opt	N7B Std	N7B Opt
Pattern					
Straight		X		X	
Bonnet					
Integral		X		X	
Gage Connection					
Stuffing Box	5/8" Glass Dia.	X			
	3/4" Glass Dia.			X	
Vessel Connection ((Solid Shank)					
Threaded	1/2" NPTM	X			
	3/4" NPTM			X	
Socketweld	1/2" Male		X		
	3/4" Male				X
Flanged			X		X
Drain Connection					
3/8" NPTF		X		X	
Ball Check Shut-Off					
Horizontal Lower and Upper Gagecocks (Iron, STL, STS)		X		X	
Vertical Lower/Horizontal Upper (Bronze)		X		X	
*Vertical Lower/Horizontal Upper **			X		X
*Omitted**			X		X
Ball Inspection Plug**					
Furnished			X		X
Omitted		X		X	
Seat					
Integral		X		X	
Handwheel					
w/Standard Pitch Thread (Iron, STL, STS)		X		X	
w/Quick Closing Threads (Bronze)		X		X	
Drain Cock					
Integral		X		X	
Polished Body					
Bronze			X		X
Guard Rods (4 per gagecock set)					
3/16" [4.8 mm] diameter			X		X

* Acceptable for ASME Service **Required for ASME Service

Pressure/Temperature

(Subject to limitations of tubular glass)

MODEL	Maximum working pressure, psi [kPa] at temperatures to- WITH STANDARD NEOPRENE GLASS PACKING -20°F [-29°C] psi [kPa]	100°F [38°C] psi [kPa]	200°F [93°C] psi [kPa]	300°F [149°C] psi [kPa]	WITH OPTIONAL TEFLON GLASS PACKING 400°F [204°C] psi [kPa]	450°F [232°C] psi [kPa]	500°F [204°C] psi [kPa]	Max. Steam Pressure psi [kPa]
Bronze								
N7A	200 [1380]	200 [1380]	190 [1310]	165 [1140]	125 [860]			125 [860]
N7B	400 [2760]	400 [2760]	385 [2650]	335 [2310]	250 [1720]			250 [1720]
Ducille Iron								
N7A, N7B	500 [3450]	500 [3450]	460 [3170]	375 [2580]	290 [2000]	250 [1720]		350 [2410]
STL, STS								
N7A, N7B	500 [3450]	500 [3450]	500 [3450]	500 [3450]	500 [3450]	500 [3450]	500 [3450]	350 [2410]

Copyright Pentair

Other Accessories . . .

An internal heating or cooling tube is offered for tubular and flat glass gages. The tube passes through the inside of the gage and is in direct contact with the liquid.

Double-and single-sided external heating and cooling chambers are offered for L and M series gages. External chambers do not contact the liquid inside the gage.

Lightweight, flexible, silicon-impregnated, fiberglass insulation is available for a wide variety of gagecocks, gages and other instrumentation. Reduces heat or cold loss at temperatures from -65°F to +1000°F (-55°C to +540°C). Penberthy insulating covers can also be used with frost proof extensions and illuminators.

Frost-proof extensions are clear plastic windows that fit over the visible part of the glass in flat glass gages. In low temperature applications, they prevent build-up of frost over the visible part of the gage resisting obstruction of the view of liquid level.

Frost-Free Sizing

Lowest Temperature	*Size*
-30° F [-35° C]	2"
-94° F [-70° C]	4"
-148° F [-100° C]	6"
-211° F [-135° C]	8"
-274° F [-170° C]	10"
-328° F [-200° C]	12"

Drain valves, drain cocks and try cocks are used in the drain or vent connection of flat glass liquid level gages.

An extended packing nut is recommended for accommodating gagecocks with protectors and gage scales for tubular gagecocks.

Gage scales are constructed of corrosion-resistant materials.

PENGAGE™ Selection software allows for fast, accurate and simple gage/gagecock specification.

Many other accessories are available. See your representatives for details.

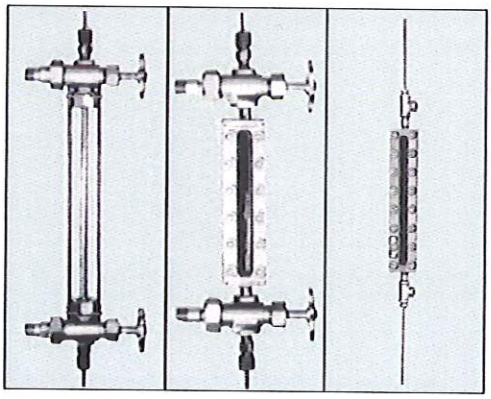

Tubular gages and end connect & side connect flat glass gages with offset pattern gagecocks, internal tube and packing adapters

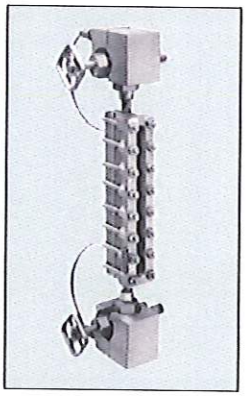

Reflex gage with external chamber mounted to back and jacketed gagecocks

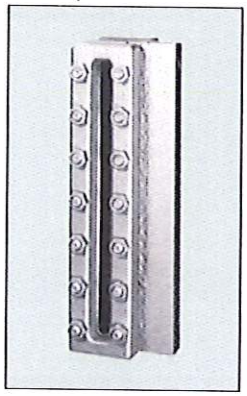

Transparent gage with single external chamber

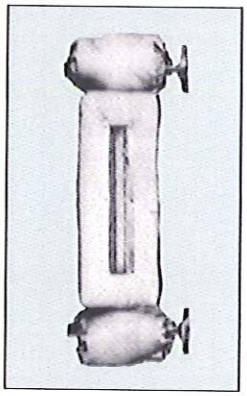

Insulation Blanket

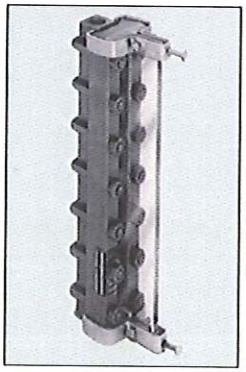

Frost-proof extensions

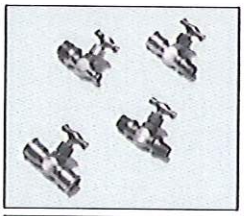

Style	*NPT 1/8"*	*1/4"*	*3/8"*
Single male	X	X	X
Male/male	X	X	
Male/female	X	X	
Female/female	X	X	

Drain cocks

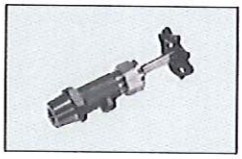

Try cock



Extending Packing Nut

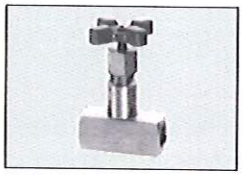

Drain valve

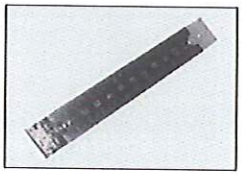

Gage scale

Certification Number 30053

Represented By:

Copyright Pentair

NEW!

Flat Glass Illuminators for Explosion-Proof applications - indoor or outdoor!

The absence of a watertight seal on conventional gage illuminators has been an ongoing problems for users seeking illumination in XP or cryogenic applications in an *outdoor* environment. Now, Penberthy has introduced the first standard lamp illuminator with a watertight seal, enabling users to get flat glass gage illumination outdoors with a product that's impervious to the elements and can operate maintenance free and reliably for years.

These new flat glass gage illuminators are available in single section units, double section units and in combinations for three or more section gages.

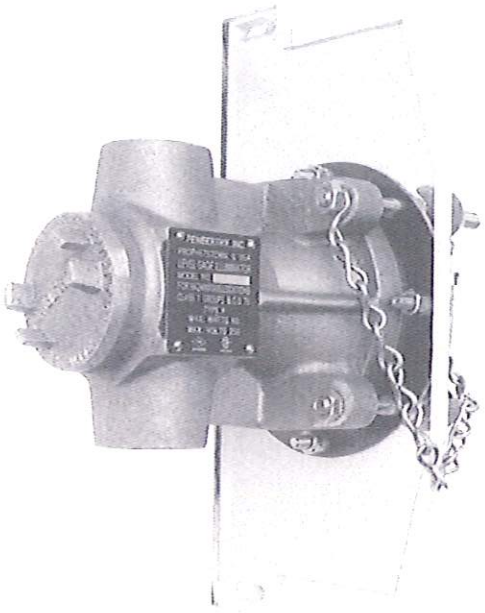

Approvals

The standard illuminator rating is 60 watts at 115Vac. Other illuminators are listed in the Optional Models Structure table below.

UNITS ARE EXPLOSION-PROOF!

FM approved
Division 1 and 2
Class I, B,C,D
Class II, E,F,G
Class III, Type 4, T4

CSA certified Ex d
Division 1 and 2
Class I, B,C,D
Class II, E,F,G
Class III, Type 4, T4

CENELEC
EExd IIB + H$_2$ T4, IP66

Optional Model Structure

EXAMPLE: Standard illuminator for doulble section size 7 flat glass gage (2TM7) with 60 watt lamp and 115 volt service

I	D	S	N	7	N	1	6

I = Illuminator

S = single section flat glass
D = double section flat glass
L = LED single sect flat glass
M = magnetic gage (inch incr)
N = LED magnetic gage

S = standard extension
F = frost extension

2, 4, 6, 8, A(10), C(12), N (Not applicable - standard indicator) = WEDGE DEPTH (inch)

GLASS SIZE (1,2,3,4,5,6,7,8,9,);
MAG GAGE INDICATOR LENGTH
(tens digit of inches; e.g., 24 inches use "2", max. 48 inches)

N (not applicable-if flat glass); MAG GAGE INDICATOR LENGTH (unit digit of inches; e.g., 24 inches use "4", max. 48 inches)

1 = 115 Vac standard thread 1" NPTF
A = 115 Vac ISO thread
2 = 230 Vac standard thread 1" NPTF
B = 230 Vac ISO thread
4 = 24 Vdc standard thread 1" NPTF
D = 24 Vdc ISO thread

2 = 25w - pigtail leads
3 = 25w - terminal block
6 = 60w - pigtail leads
7 = 60w - terminal block

Copyright Pentair

DRESSER Consolidated

Pressure Relief Valves



1900 Standard Series

Consolidated® Safety Relief Valve



Table of Contents

Conversion Table 1900.2

Features & Benefits 1900.4

Scope of Design
- Overview 1900.5
- Pressure Relief Valve Operation 1900.10
- Product Features 1900.12
- Steam Trim (TD) Valves 1900.14
- Liquid Trim (LA) Valves 1900.15
- Restricted Lift Valves 1900.16
- Soft Seat Applications 1900.17

Materials
- Conventional Design 1900 Series 1900.20
- Bellows Design 1900-30 Series 1900.22
- Balanced Bellows Design 1900-35 . . . . . 1900.24
- Soft Seat (DA) 1900.26
- Steam Trim (TD) 1900.27
- Liquid Trim (LA) 1900.28
- Special Material and Service Options 1900.29
- Sour Gas (SG) Trim 1900.29
- Hydrofluoric Acid (HA) Service 1900.31
- Corrosive Service
  - Stainless Steel (S2, S3 and S4) 1900.32
  - Alloy 20 (A1, A2, A3 and A4) 1900.34
  - Monel (M1, M1½ (MB), M2, M3 and M4) 1900.35
  - Hastelloy C (H1, H2, H3 and H4) 1900.36
  - Duplex (D1, D2, D3 and D4) 1900.37
- Low Temperature - Process Fluid (L1, L2 and L3) 1900.39
- Low Temperature - Ambient (C1 and C2) 1900.40
- High Temperature - (T1 and T2) 1900.41
- Lethal Service 1900.42
- O-Ring Selection (Durometer by valve type and set pressure) 1900.43
- O-Ring Selection (Temperature limits) 1900.44

Accessories
- 1900 Caps, Levers, and Accessories 1900.45
- Cap and Lever Construction 1900.49
- Bolt-on Jackets 1900.51

Dimension & Weights 1900.52

Pressure / Temperature Tables 1900.61

Capacity Tables 1900.91

Valve Configuration Code 1900.98

How to Order a 1900 Safety Relief Valve 1900.101





Conversion Table

All the USCS values are converted to Metric values using the following conversion factors:

USCS Unit	Conversion Factor	Metric Unit
in.	25.4	mm
lb.	0.4535924	kg
in^2	6.4516	cm^2
ft^3/min	0.2831685	m^3/min
gal/min	3.785412	L/min
lb/hr	0.4535924	kg/hr
psig	0.6894757	barg
ft lb	1.3558181	Nm
°F	5/9 (°F-32)	°C







The Consolidated type 1900 Safety Relief Valve is designed to be highly adaptable in order to meet numerous application requirements.

INLET SIZES	1" (25.4 mm) through 12" (304.8 mm)
INLET RATINGS	ANSI Class 150 through 2500
OUTLET SIZES	2" (50.8 mm) through 16" (406.4 mm)
OUTLET RATINGS	ANSI Class 150 and 300
ORIFICE SIZES	Seventeen sizes: D through W
TEMPERATURE RANGE	-450°F (-267.8°C) to 1500°F (815.6°C)
MATERIALS	Cast carbon steel body with stainless steel trim is standard.

CERTIFICATION

ASME B & PVC, Section II - Material (Applicable as required by ASME B & PVC, Section III or VIII)

ASME B & PVC, Section III, class 2 and 3 (Gas, Vapor, and Liquid Service)

ASME B & PVC, Section VIII (Gas, Vapor, and Liquid Service)

ASME B16.34 and ASME B16.5

API 520, 526 and 527

ISO 4126

NACE MR0103-2003 Standard Material Requirements

Features & Benefits

- Heavy duty construction provides low cost of ownership by providing longer valve service life, lower maintenance costs and easy valve conversions.
- Design flexibility and parts interchangeability accommodates process changes through easy conversion to a variety of designs.
- An optional bellows design is a cost effective solution which compensates for the effects of variable back pressure.
- A soft seat design allows to the valve to remain leak free at 95% of set pressure over 100 psig (6.89 barg) with a backup metal seat for additional safety.

API Standard 526-2002

Pressure Relief Valves specified within this catalog comply with API Standard 526 Fifth edition, 2002.

When required for replacement, Consolidated 1900 valves are also available with connections and dimensions in accordance with supplanted API Standard Third edition 1984 and prior editions.

Product variations covered in subsequent pages are noted below:

Product Variation	Description
1900	Conventional
1900-30	Bellows Construction
1900-35	Balanced Bellows with Auxiliary Balancing Piston
1900HA	Special Materials for Hydrofluoric Acid Service
1900SG	Sour Gas Trim
1900DA	Soft Seat
1900LA	Liquid Trim with Metallic Seats
1900DA - LA	Liquid Trim with Soft Seats
1900TD	Special Trim for Steam & Organic Heat Transfer Media

Scope of Design

1900 Series Overview

Type 1900 Series
Conventional

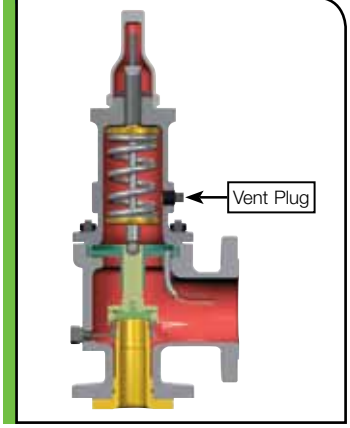

1900 Series Conventional Safety Relief Valves

Steel, Flat Seat, Top Guided, High Capacity, Stainless Steel Trim

This standard rugged configuration is equipped with corrosion resistant trim and a carbon steel body, bonnet and cap. The components are top guided, providing for free and repeatable action.

The flat disc seat provides for easy maintenance and remachining.

The exclusive “Eductor Tube” minimizes bonnet cavity pressure so that product performance is predictable.

The nozzle is bottom inserted and rigidly held in position, providing a corrosion resistant path of flow to the valve and corrosion resistant seating surfaces.

Type 1900-30 Series
Bellows

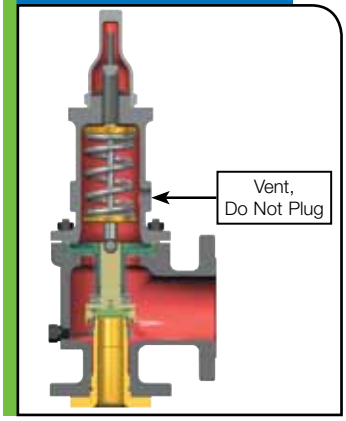

1900-30 Series Bellows Construction

This valve is the same as the conventional design except that a bellows has been added. When the bellows is installed, the eductor tube is removed.

Caution: It is important that the bonnet be vented to the atmosphere.

A bellows is added to the conventional valve to deal with any of several situations:

(1) Back pressure entering the valve through the valve outlet is excessive or variable. If back pressure fluctuates with ±10% of a nominal value, a bellows is required.

If a built up back pressure exceeds 10% of the set pressure or cold differential set pressure, a bellows must be used.

(2) If the entering fluid is a slurry, highly viscous, or of a nature that it can enter the critical clearances between the guides/disc holder, protect that area with a bellows.

(3) If the fluid being handled is corrosive to the upper works of the valve, isolate the bonnet chamber through use of a bellows.

Conventional valves can be easily converted to a bellows design or vice versa through the use of retrofit kits.

All Consolidated 1900-30 Series valves are balanced bellows designs, meaning that they fully compensate for the effects of back pressure.

Type 1900-35 Series
Balanced Bellows with Auxiliary Balancing Piston

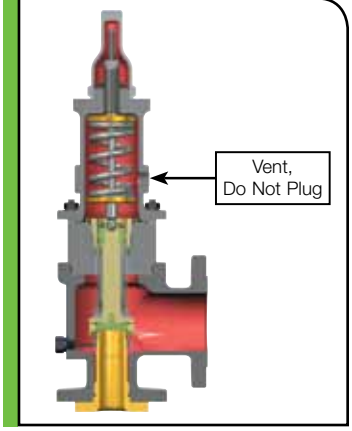

1900-35 Series Balanced Bellows (with Auxiliary Balancing Piston)

The Balanced Bellows seals the body and fluid stream from the bonnet and working parts. Auxiliary balancing piston assures proper valve performance by compensating for back pressure in case of bellows failure.

The use of an auxiliary balanced piston is indicated when:

(1) Back pressure (either constant or variable) exists and;

(2) Excessive pressure may build in the bonnet as a result of pressure build-up in the bonnet vent piping and;

(3) Resultant build-up of pressure in the bonnet would cause a dangerous condition.

Caution: It is important that the bonnet be vented to the atmosphere.

NOTE: Unless otherwise stated the valve is always supplied with a screwed cap.The exception to this would be where ASME B & PVC, Section VIII requires levers for steam, air, and hot water service over 140°F (60°C).

Refer to Accessories for available types of caps, levers, and accessories.

Scope of Design (Contd.)

1900 Series Overview (Contd.)

Standard Valve Connection - D Orifice

	API			ASME		
Orifice Area	in^2	0.110		in^2	0.128	
	cm^2	0.710		cm^2	0.825	
Valve Type	Inlet			Outlet		
	Size		ANSI Std. Class	Size		ANSI Std. Class
	in.	mm		in.	mm	
1905	1.00	25.4	150	2.00	50.8	150
1906	1.00	25.4	300	2.00	50.8	150
1910	1.00	25.4	300	2.00	50.8	150
1912	1.00	25.4	600	2.00	50.8	150
1914	1.50	38.1	900	2.00	50.8	300
1916	1.50	38.1	1500	2.00	50.8	300
1918	1.50	38.1	2500	3.00	76.2	300
1920	1.00	25.4	300	2.00	50.8	150
1922	1.00	25.4	600	2.00	50.8	150
1924	1.50	38.1	900	2.00	50.8	300
1926	1.50	38.1	1500	2.00	50.8	300
1928	1.50	38.1	2500	3.00	76.2	300

Standard Valve Connection - E Orifice

	API			ASME		
Orifice Area	in^2	0.196		in^2	0.228	
	cm^2	1.265		cm^2	1.470	
Valve Type	Inlet			Outlet		
	Size		ANSI Std. Class	Size		ANSI Std. Class
	in.	mm		in.	mm	
1905	1.00	25.4	150	2.00	50.8	150
1906	1.00	25.4	300	2.00	50.8	150
1910	1.00	25.4	300	2.00	50.8	150
1912	1.00	25.4	600	2.00	50.8	150
1914	1.50	38.1	900	2.00	50.8	300
1916	1.50	38.1	1500	2.00	50.8	300
1918	1.50	38.1	2500	3.00	76.2	300
1920	1.00	25.4	300	2.00	50.8	150
1922	1.00	25.4	600	2.00	50.8	150
1924	1.50	38.1	900	2.00	50.8	300
1926	1.50	38.1	1500	2.00	50.8	300
1928	1.50	38.1	2500	3.00	76.2	300

Standard Valve Connection - F Orifice

	API			ASME		
Orifice Area	in^2	0.307		in^2	0.357	
	cm^2	1.981			2.302	
Valve Type	Inlet			Outlet		
	Size		ANSI Std. Class	Size		ANSI Std. Class
	in.	mm		in.	mm	
1905	1.50	38.1	150	2.00	50.8	150
1906	1.50	38.1	300	2.00	50.8	150
1910	1.50	38.1	300	2.00	50.8	150
1912	1.50	38.1	600	2.00	50.8	150
1914	1.50	38.1	900	3.00	76.2	300
1916	1.50	38.1	1500	3.00	76.2	300
1918	1.50	38.1	2500	3.00	76.2	300
1920	1.50	38.1	300	2.00	50.8	150
1922	1.50	38.1	600	2.00	50.8	150
1924	1.50	38.1	900	3.00	76.2	300
1926	1.50	38.1	1500	3.00	76.2	300
1928	1.50	38.1	2500	3.00	76.2	300

Standard Valve Connection - G Orifice

	API			ASME		
Orifice Area	in^2	0.503		in^2	0.585	
	cm^2	3.245			3.774	
Valve Type	Inlet			Outlet		
	Size		ANSI Std. Class	Size		ANSI Std. Class
	in.	mm		in.	mm	
1905	1.50	38.1	150	3.00	76.2	150
1906	1.50	38.1	300	3.00	76.2	150
1910	1.50	38.1	300	3.00	76.2	150
1912	1.50	38.1	600	3.00	76.2	150
1914	1.50	38.1	900	3.00	76.2	300
1916	2.00	50.8	1500	3.00	76.2	300
1918	2.00	50.8	2500	3.00	76.2	300
1920	1.50	38.1	300	3.00	76.2	150
1922	1.50	38.1	600	3.00	76.2	150
1924	1.50	38.1	900	3.00	76.2	300
1926	2.00	50.8	1500	3.00	76.2	300
1928	2.00	50.8	2500	3.00	76.2	300

Scope of Design (Contd.)

1900 Series Overview (Contd.)

Standard Valve Connection - H Orifice

	API			ASME		
Orifice Area	in^2	0.785		in^2	0.913	
	cm^2	5.065		cm^2	5.888	
Valve Type	Inlet			Outlet		
	Size		ANSI Std. Class	Size		ANSI Std. Class
	in.	mm		in.	mm	
1905	1.50	38.1	150	3.00	76.2	150
1906	1.50	38.1	300	3.00	76.2	150
1910	2.00	50.8	300	3.00	76.2	150
1912	2.00	50.8	600	3.00	76.2	150
1914	2.00	50.8	900	3.00	76.2	150
1916	2.00	50.8	1500	3.00	76.2	300
1920	2.00	50.8	300	3.00	76.2	150
1922	2.00	50.8	600	3.00	76.2	150
1924	2.00	50.8	900	3.00	76.2	150
1926	2.00	50.8	1500	3.00	76.2	300

Standard Valve Connection - J Orifice

	API			ASME		
Orifice Area	in^2	1.287		in^2	1.496	
	cm^2	8.303		cm^2	9.652	
Valve Type	Inlet			Outlet		
	Size		ANSI Std. Class	Size		ANSI Std. Class
	in.	mm		in.	mm	
1905	2.00	50.8	150	3.00	76.2	150
1906	2.00	50.8	300	3.00	76.2	150
1910	3.00	76.2	300	4.00	101.6	150
1912	3.00	76.2	600	4.00	101.6	150
1914	3.00	76.2	900	4.00	101.6	150
1916	3.00	76.2	1500	4.00	101.6	300
1920	3.00	76.2	300	4.00	101.6	150
1922	3.00	76.2	600	4.00	101.6	150
1924	3.00	76.2	900	4.00	101.6	150
1926	3.00	76.2	1500	4.00	101.6	300

Standard Valve Connection - K Orifice

	API			ASME		
Orifice Area	in^2	1.838		in^2	2.138	
	cm^2	11.858		cm^2	13.794	
Valve Type	Inlet			Outlet		
	Size		ANSI Std. Class	Size		ANSI Std. Class
	in.	mm		in.	mm	
1905	3.00	76.2	150	4.00	101.6	150
1906	3.00	76.2	300	4.00	101.6	150
1910	3.00	76.2	300	4.00	101.6	150
1912	3.00	76.2	600	4.00	101.6	150
1914	3.00	76.2	900	6.00	152.4	150
1916	3.00	76.2	1500	6.00	152.4	300
1920	3.00	76.2	300	4.00	101.6	150
1922	3.00	76.2	600	4.00	101.6	150
1924	3.00	76.2	900	6.00	152.4	150
1926	3.00	76.2	1500	6.00	152.4	300

Standard Valve Connection - L Orifice

	API			ASME		
Orifice Area	in^2	2.853		in^2	3.317	
	cm^2	18.406		cm^2	21.400	
Valve Type	Inlet			Outlet		
	Size		ANSI Std. Class	Size		ANSI Std. Class
	in.	mm		in.	mm	
1905	3.00	76.2	150	4.00	101.6	150
1906	3.00	76.2	300	4.00	101.6	150
1910	4.00	101.6	300	6.00	152.4	150
1912	4.00	101.6	600	6.00	152.4	150
1914	4.00	101.6	900	6.00	152.4	150
1916	4.00	101.6	1500	6.00	152.4	150
1920	4.00	101.6	300	6.00	152.4	150
1922	4.00	101.6	600	6.00	152.4	150
1924	4.00	101.6	900	6.00	152.4	150
1926	4.00	101.6	1500	6.00	152.4	150

Scope of Design (Contd.)

1900 Series Overview (Contd.)

Standard Valve Connection - M Orifice

	API			ASME		
Orifice Area	in^2	3.600		in^2	4.186	
	cm^2	23.226		cm^2	27.006	
Valve Type	Inlet			Outlet		
	Size		ANSI Std. Class	Size		ANSI Std. Class
	in.	mm		in.	mm	
1905	4.00	101.6	150	6.00	152.4	150
1906	4.00	101.6	300	6.00	152.4	150
1910	4.00	101.6	300	6.00	152.4	150
1912	4.00	101.6	600	6.00	152.4	150
1914	4.00	101.6	900	6.00	152.4	150
1920	4.00	101.6	300	6.00	152.4	150
1922	4.00	101.6	600	6.00	152.4	150
1924	4.00	101.6	900	6.00	152.4	150

Standard Valve Connection - N Orifice

	API			ASME		
Orifice Area	in^2	4.340		in^2	5.047	
	cm^2	28.000		cm^2	32.561	
Valve Type	Inlet			Outlet		
	Size		ANSI Std. Class	Size		ANSI Std. Class
	in.	mm		in.	mm	
1905	4.00	101.6	150	6.00	152.4	150
1906	4.00	101.6	300	6.00	152.4	150
1910	4.00	101.6	300	6.00	152.4	150
1912	4.00	101.6	600	6.00	152.4	150
1914	4.00	101.6	900	6.00	152.4	150
1920	4.00	101.6	300	6.00	152.4	150
1922	4.00	101.6	600	6.00	152.4	150
1924	4.00	101.6	900	6.00	152.4	150

Standard Valve Connection - P Orifice

	API			ASME		
Orifice Area	in^2	6.380		in^2	7.417	
	cm^2	41.161		cm^2	47.852	
Valve Type	Inlet			Outlet		
	Size		ANSI Std. Class	Size		ANSI Std. Class
	in.	mm		in.	mm	
1905	4.00	101.6	150	6.00	152.4	150
1906	4.00	101.6	300	6.00	152.4	150
1910	4.00	101.6	300	6.00	152.4	150
1912	4.00	101.6	600	6.00	152.4	150
1914	4.00	101.6	900	6.00	152.4	150
1920	4.00	101.6	300	6.00	152.4	150
1923	4.00	101.6	600	6.00	152.4	150
1924	4.00	101.6	900	6.00	152.4	150

Standard Valve Connection - Q Orifice

	API			ASME		
Orifice Area	in^2	11.050		in^2	12.850	
	cm^2	71.290		cm^2	82.903	
Valve Type	Inlet			Outlet		
	Size		ANSI Std. Class	Size		ANSI Std. Class
	in.	mm		in.	mm	
1905	6.00	152.4	150	8.00	203.2	150
1906	6.00	152.4	300	8.00	203.2	150
1910	6.00	152.4	300	8.00	203.2	150
1912	6.00	152.4	600	8.00	203.2	150
1920	6.00	152.4	300	8.00	203.2	150
1922	6.00	152.4	600	8.00	203.2	150

Standard Valve Connection - R Orifice

	API			ASME		
Orifice Area	in^2	16.000		in^2	18.600	
	cm^2	103.226		cm^2	120.000	
Valve Type	Inlet			Outlet		
	Size		ANSI Std. Class	Size		ANSI Std. Class
	in.	mm		in.	mm	
1905	6.00	152.4	150	8.00	203.2	150
1906	6.00	152.4	300	8.00	203.2	150
1910	6.00	152.4	300	10.00	254.0	150
1912	6.00	152.4	600	10.00	254.0	150
1920	6.00	152.4	300	8.00	203.2	150
1922	6.00	152.4	600	10.00	254.0	150

Standard Valve Connection - T Orifice

	API			ASME		
Orifice Area	in^2	26.000		in^2	30.210	
	cm^2	167.742		cm^2	194.903	
Valve Type	Inlet			Outlet		
	Size		ANSI Std. Class	Size		ANSI Std. Class
	in.	mm		in.	mm	
1905	8.00	203.2	150	10.00	254.0	150
1906	8.00	203.2	300	10.00	254.0	150
1910	8.00	203.2	300	10.00	254.0	150
1912	8.00	203.2	600	10.00	254.0	150
1920	8.00	203.2	300	10.00	254.0	150
1922	8.00	203.2	600	10.00	254.0	150

Scope of Design (Contd.)

1900 Series Overview (Contd.)

Standard Valve Connection - U Orifice

	API			ASME		
Orifice Area	in^2	N/A		in^2	35.099	
	cm^2	N/A		cm^2	226.445	
Valve Type	Inlet			Outlet		
	Size		ANSI Std. Class	Size		ANSI Std. Class
	in.	mm		in.	mm	
1905	8.00	203.2	150	10.00	254.0	150
1906	8.00	203.2	300	10.00	254.0	150
1910	8.00	203.2	300	10.00	254.0	150
1912	8.00	203.2	600	10.00	254.0	150
1920	8.00	203.2	300	10.00	254.0	150
1922	8.00	203.2	600	10.00	254.0	150

Standard Valve Connection - V Orifice

	API			ASME		
Orifice Area	in^2	N/A		in^2	50.260	
	cm^2	N/A		cm^2	324.257	
Valve Type	Inlet			Outlet		
	Size		ANSI Std. Class	Size		ANSI Std. Class
	in.	mm		in.	mm	
1905	10.00	254.0	150	14.00	355.6	150
1906	10.00	254.0	300	14.00	355.6	150
1910	10.00	254.0	300	14.00	355.6	150
1920	10.00	254.0	300	14.00	355.6	150

Standard Valve Connection - W Orifice

	API			ASME		
Orifice Area	in^2	N/A		in^2	78.996	
	cm^2	N/A		cm^2	509.651	
Valve Type	Inlet			Outlet		
	Size		ANSI Std. Class	Size		ANSI Std. Class
	in.	mm		in.	mm	
1905	12.00	304.8	150	16.00	406.4	150
1906	12.00	304.8	300	16.00	406.4	150
1910	12.00	304.8	300	16.00	406.4	150
1920	12.00	304.8	300	16.00	406.4	150

Scope of Design (Contd.)

How Pressure Relief Valves Operate

All pressure relief valves operate on the principle of inlet system pressure overcoming a spring load, allowing the valve to relieve a defined capacity.

Figure 1900.1 - Closed

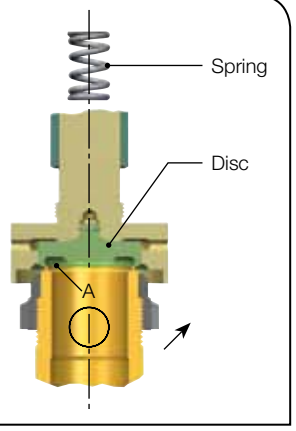

When the valve is closed during normal operation (See Figure 1900.1), the vessel pressure acting against the seating surfaces (area A) is resisted by the spring force. As vessel pressure increases, the pressure at (A) tends to equalize the spring force and the pressure holding the seats together approaches zero.

Figure 1900.2 - Partially Open

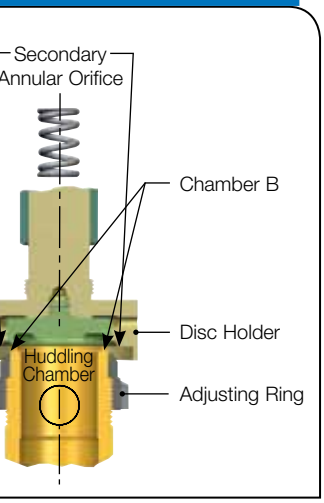

In vapor or gas service the valve may “simmer” before it will “pop”. When the vessel pressure increases to within one to two percent of the set pressure, media will audibly move past the seating surfaces into Chamber (B). As a result of restriction of flow in the secondary annular orifice, pressure builds up in Chamber (B) (See Figure 1900.2). Since pressure can now act over a larger area, an additional force is available to overcome the spring force. By adjusting the “adjusting ring” the opening in the secondary annular orifice can be altered, thus controlling pressure build-up in chamber (B). This controlled pressure build-up in chamber (B) will overcome the spring force causing the disc to move away from the nozzle seat and the valve to “pop” open.

Figure 1900.3 - Fully Open

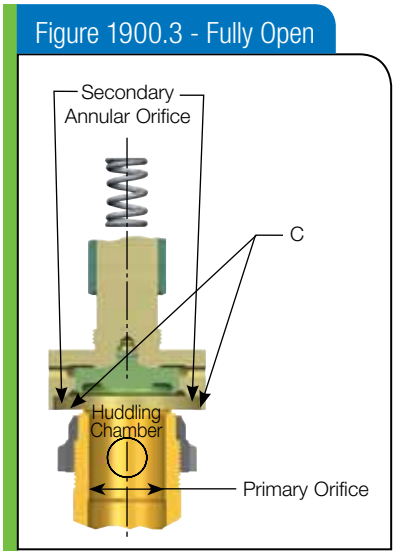

Once the valve has opened an additional pressure build-up at (C) occurs. (See Figure 1900.3.) This is due to the sudden flow increase and the restriction to flow through another annular orifice formed between the inner edge of the disc holder and the outside diameter of the adjusting ring. These additional forces at (C) cause the disc to lift substantially at “pop”.

Flow is restricted by the opening between the nozzle seat and disc seat until the disc seat has been lifted from the nozzle seat approximately one-quarter of the nozzle throat diameter. After the disc has attained this degree of lift, flow is then restricted by the primary orifice rather than by the area between the seating surfaces.

Blowdown (the difference between opening and closing pressure) can be controlled within limits by positioning the single adjusting ring. Blowdown is caused by the result of the spring force not being able to overcome the summation of the forces at (A), (B), and (C) until the pressure at (A) drops below the set pressure.

Scope of Design (Contd.)

How Pressure Relief Valves Operate

Figure 1900.4

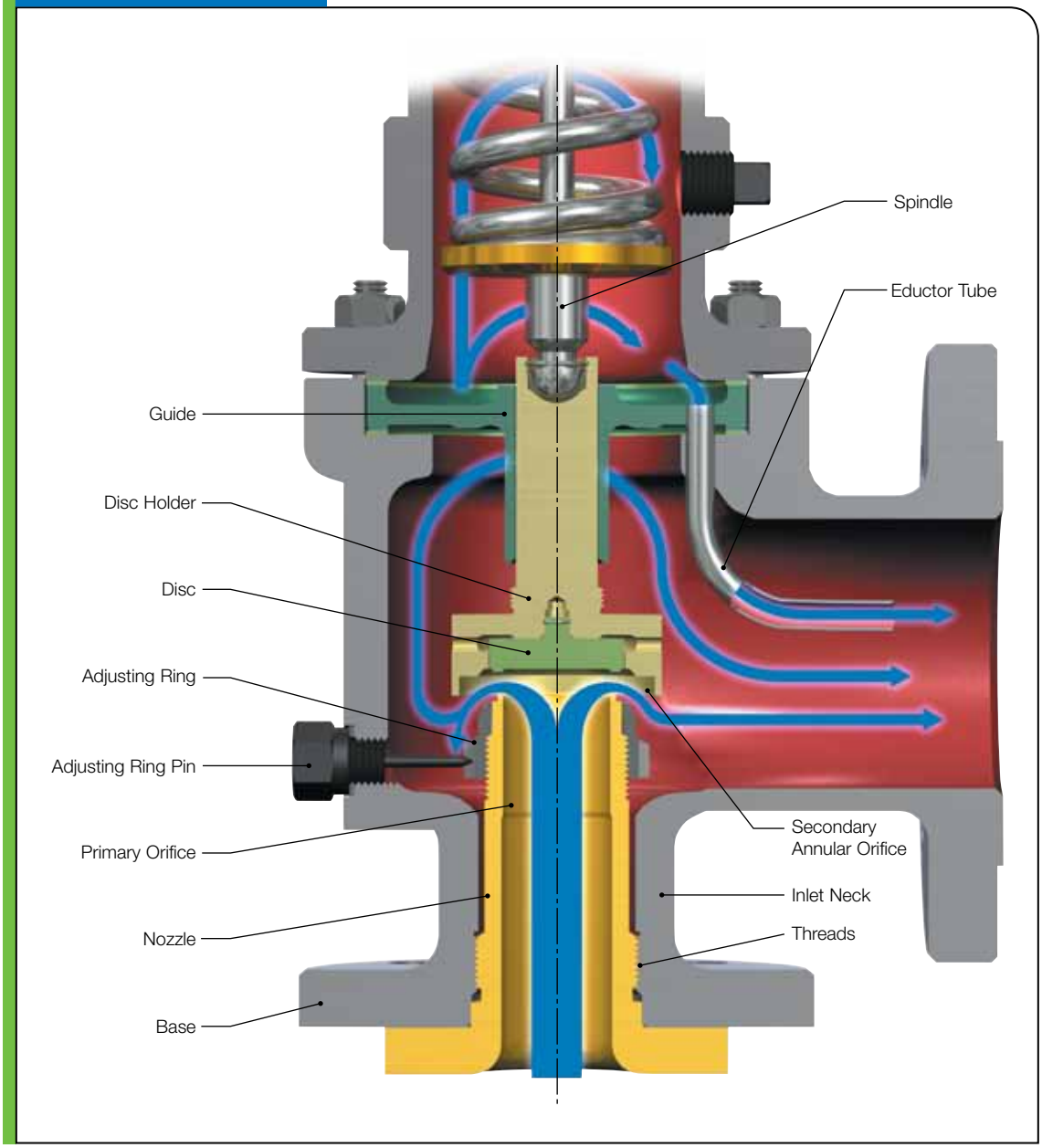

Note: Figure 1900.4 reflects the flow path of fluid through the valve. It is significant to recognize that the system pressure enters through the nozzle and remains at a high pressure until it expands through the secondary annular orifice. Pressure downstream of the secondary annular orifice is much lower than the system pressure. The upper portion of the valve base plus the outlet flange are of a lower pressure rating than the inlet side of the valve.

Blowdown Settings - Production testing required by Manufacturers of safety relief valves is governed by ASME Section VIII, UG-136 (d), which does not require the setting of blowdown during production test. Adjusting rings on the 1900 flanged safety relief valve series are factory adjusted to predetermined ring settings. This will provide a consistent opening and closing pressure on the safety relief valve.

Scope of Design (Contd.)

Product Features - 1900 Flanged Series

Adjusting Ring

The adjusting ring in the Consolidated safety relief valve is preset to predetermined positions prior to putting the valve in service. Presetting reduces the necessity of popping the valve in service to ascertain that the ring has been set properly for attaining the necessary lift and relieving capacity.

Simple Blowdown Adjustment

Adjustment of Consolidated safety relief valve blowdown, or reseating pressure, is by means of a single adjusting ring. When moved upward, blowdown is increased (lowering the reseating pressure), or when moved downward, the blowdown is decreased (raising the reseating pressure). The simplicity and advantages of this adjustment are obvious when comparing valves having two or more adjusting rings each of which affect valve action as well as blowdown.

Minimum Guiding Area

Guiding areas greater than those required to align the seating surfaces are undesirable in a safety relief valve, especially those used in the process industries. The smaller the guiding area of the valve (when corrosion or contamination from the flowing medium build up in the valve guiding surfaces) the less tendency the guiding area will have to stick and hinder valve operation.

Nozzle

The nozzle is a pressure containing component in constant contact with the process media in both the open and closed valve positions. To ensure maximum reliability and safety, Consolidated flanged SRV nozzles are made from forgings, investment castings, or centrifugal castings.

Spindle Pocket Connection

The connection between the spindle and disc holder in a Consolidated safety relief valve is a positive method of attachment. The Inconel snap ring and groove design make it virtually impossible to remove the spindle from the disc holder, unless the ring is compressed intentionally. This design requires a minimum amount of effort to disassemble during maintenance.

Design Simplicity

Consolidated safety relief valves embody a minimum number of component parts which results in a savings by minimizing spare parts inventory and simplifying valve maintenance.

Maximum Seat Tightness

Seat finish in a safety relief valve is of the utmost importance; otherwise, valve leakage will occur.

Consolidated safety relief valve seats are precision machined and lapped. This ensures positive seating and prevents loss of contained media.

The Thermodisc™ design provides a tighter closure and compensates for temperature variations around the periphery of the nozzle. Thermal distortion, which produces seat leakage, is minimized in steam service.

Cap and Lever Interchangeability

Many times it is necessary to change the type of cap or lever in the field after a valve has been installed. All Consolidated safety relief valves are supplied so they can be converted to any type of lever or cap desired. It is not necessary to remove the valve from the installation, nor will the set pressure be affected when making such a change.

Valve Interchangeability

A Consolidated safety relief valve may be converted from the standard, conventional type valve to the bellows type, or to the O-Ring seat seal type, Thermodisc™ seat Liquid Trim, or vice versa, requiring a minimum number of new parts. This results in lower costs.

Quality Material

All Consolidated safety relief valve castings and forgings are made to ASTM/ASME specifications and are subject to many rigid inspections, ensuring the highest degree of quality.

Coupled with the highest quality workmanship, this ensures continuous protection and long, trouble-free valve life.

Scope of Design (Contd.)

Product Features - 1900 Flanged Series

Reduction of Valve Bonnet Pressure

Closed bonnet valves are subject to variable pressure past the guiding surfaces when the valve is open, which adds a variable force to that of the spring, affecting valve performance. To eliminate excess bonnet pressure and ensure good valve opening and closing action, an Eductor Tube is provided.

The Eductor Tube reduces bonnet pressure by pulling discharging fluids out of the bonnet faster than it is possible for the discharging fluids to enter past the guiding surfaces, acting as a siphon due to the drawing effect of the flow through the outlet side of the valve.

Eductor Tube Reduces Bonnet Pressure

An exclusive with Consolidated valves! During valve discharge, media flows through the clearance between the disc holder and guide, building up bonnet pressure. This adds a variable force to the spring force, which inhibits valve lift. Bonnet pressure is reduced by the eductor effect of the medium flowing at high velocity at the valve outlet.

The greater lifting force (resulting from a reduction in bonnet pressure) introduces important advantages:

(1) Response to blowdown control adjustment is uniform

(2) Positive, full-rated capacity at low overpressures is assured

(3) Better operation at higher back pressures with Eductor Tube.

(4) Complete stability (of valve lift and capacity) is assured during operation.

(5) Increases the lifting force when the valve opens and tends to break slight corrosive deposits or surface film which accumulate on the guiding surfaces and retard valve action. (For severe corrosion applications, a bellows valve is recommended.)

Figure 1900.5 - Eductor Tube

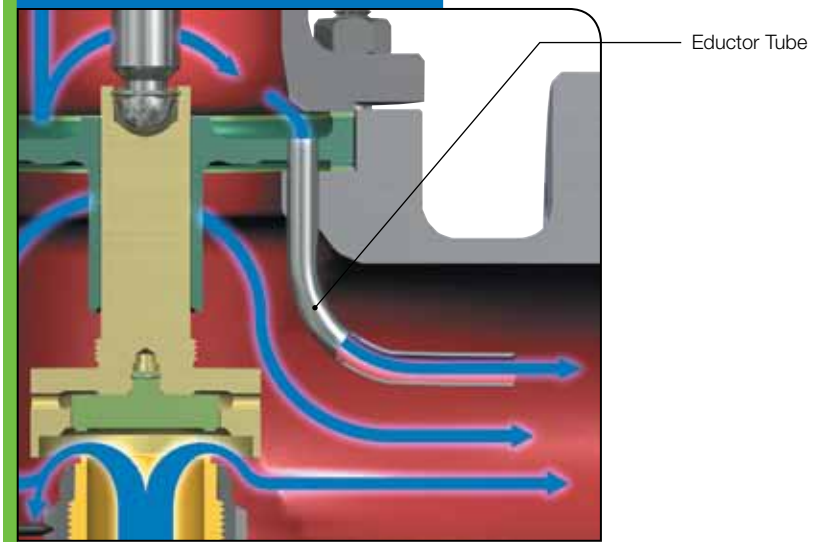

Scope of Design (Contd.)

1900 Steam Trim (TD) Valves

The 1900 TD is specifically designed for steam service and organic heat transfer media and is certified to ASME Code Section VIII.

Thermodisc™ – this is a specifically designed disc for use on high temperature fluids. This concept has more than 40 years of field proven performance that ensures the tightest valves in the world.

A Thermodisc™ is required for steam service.

The Martensitic stainless steel disc construction allows for high strength and toughness. As the set point of the valve is approached, the pressure sealing effect of the Thermodisc™ assists in the tightness of the seat as does the rapid thermal equalization that occurs due to the thin sealing section.

1900 Steam Trim Internals

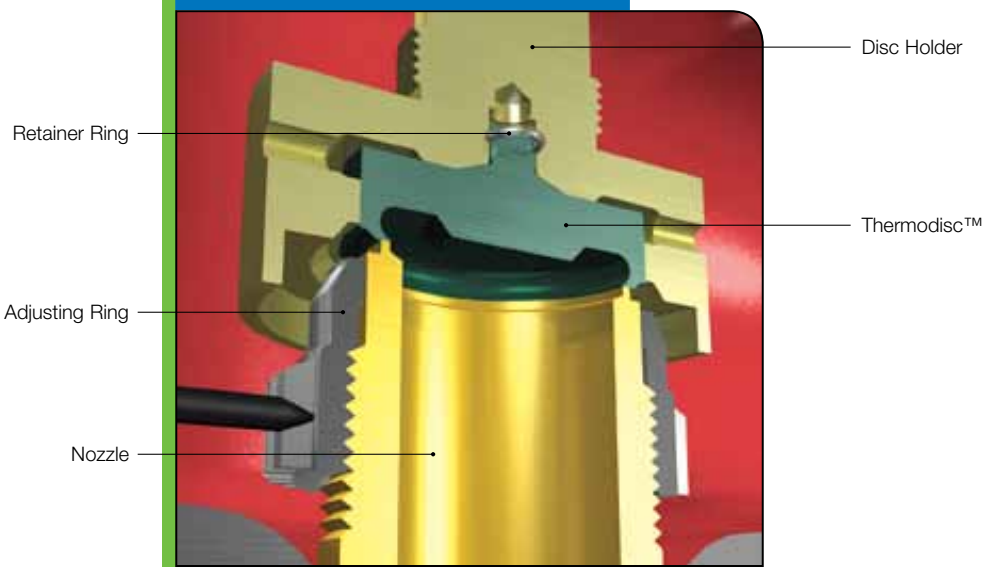

1900 Disc Design Availability

Valve Type	Disc Design										ASME Code Section
	Standard Solid Disc					Thermodisc[1]					
	Steam	Liquid	Liquid Organic Heat Transfer Media	Vapor Organic Heat Transfer Media	Vapor	Steam	Liquid	Liquid Organic Heat Transfer Media	Vapor Organic Heat Transfer Media	Vapor	
1900	-	X	X	X	X	X	-	-	X	-	VIII
1900-30	-	X	X	X	X	X	-	-	X	-	VIII
1900-35	-	X	X	X	X	X	-	-	X	-	VIII
1900/P1[2]	-	-	-	-	-	X[3]	X[4]	-	X	-	I or VIII
1900/P3[2]	-	-	-	-	-	X[3]	-	-	X	-	I or VIII

NOTES: 1 Thermodisc™ is provided in one material only, a specially heat treated martenistic stainless steel.
2 Refer to the 1900/P Series section for product information.
3 1900/P Series are not intended for overpressure protection of power boiler drum, superheater or reheater equipment.
4 Consult the factory for special conditions that require the use of an ASME Code Section I pressure relief valve. Except for liquid thermal relief applications, the "P" Series are not intended for liquid service.

Scope of Design (Contd.)

1900 Liquid Trim (LA) Valves

The Liquid Trim LA (liquid application) represents the second generation of ASME B & PVC, Section VIII certified liquid trim valves and must be used for all liquid applications for both ASME B & PVC, Section VIII certified and non-certified valves. Liquid applications have been defined as follows:

(1) if the fluid remains liquid while flowing through the valve

(2) if flowing fluid flashes going through the valve

(3) for ASME B & PVC, Section VIII certified and non-certified thermal relief applications. (Thermal Relief is to prevent excessive pressure caused by thermal expansion of trapped liquids). The LA trim provides blowdown performance with ranges from 7% to 12% below the set pressure. This valuable feature provides conservation of media, a positive lift and a smooth chatter-free operation. Because of the short blowdown performance of this design, it is critical that the inlet connection always provide for a pressure drop of 3% or less from the vessel to the valve as recommended by API 520.

Conversion of existing 1900 Series valves to liquid trim is available through the factory or your local Green Tag Center.

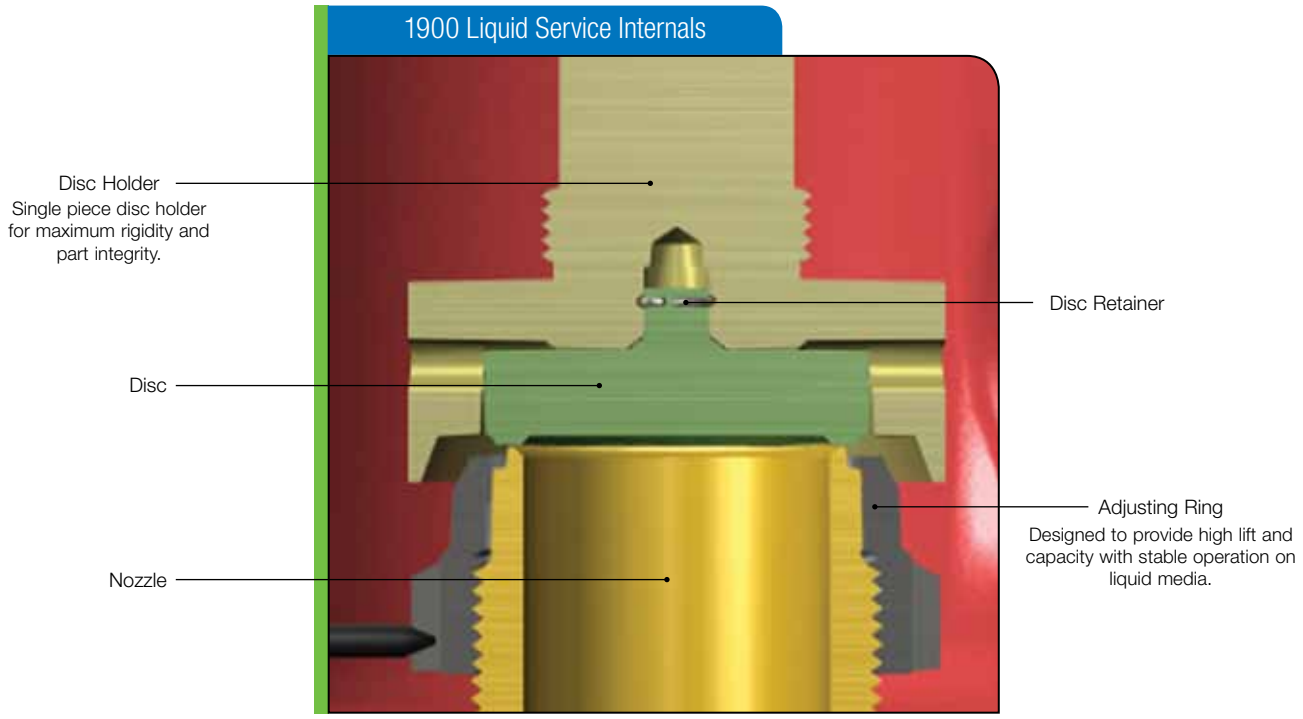

Scope of Design (Contd.)

1900 Restricted Lift Valves

The 1900 series is offered in orifice sizes ranging from the smallest “D” size to the largest “W” size. In order to accomplish certain valve functions some special considerations have to be made. Such a case is the D and E orifice designs noted below.

The D and E valves are restricted lift versions of the “F” orifice valve. The lift is restricted by a limit washer to provide the equivalent effective orifice area for a “D” or “E” orifice. This design is available with a balanced bellows configuration and is designed for back pressure applications.

The standard 1900 Series are available with restricted lifts in orifices ranging from “F” to “W” for compressible media only.

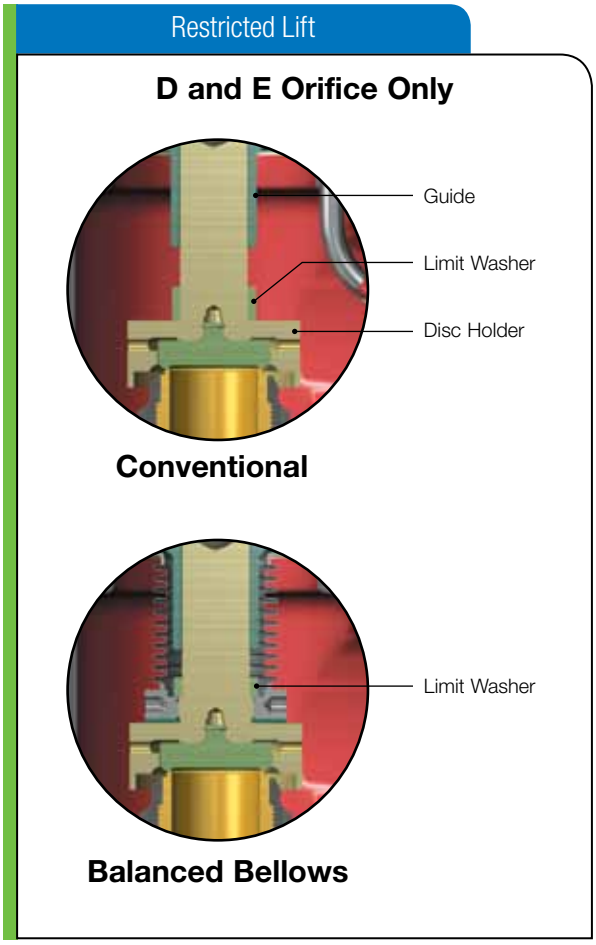

Scope of Design (Contd.)

Soft Seat Applications

Closeness of Operating Pressure to Set Pressure

Where the operating pressure is close to the set pressure, seat tightness can be maintained at relatively higher operating pressures.

Compressor Discharge and Positive Displacement Pump Service

Mechanical vibration and pressure waves could lift the valve disc with each stroke and may cause flat metal-to-metal seats to rub together and become damaged.

The 45° metal-to-metal load bearing seats in the Consolidated O-Ring seat seal assure true alignment,aided by full system pressure behind the O-Ring, which effectively seals against leakage.

Corrosive Services

In some services, corrosion of the seating surfaces is the cause of valve leakage. In this type of service, the Consolidated O-Ring seat seal will protect the metal seat on the nozzle against contact of the corrosive fluid thereby maintaining greater tightness.

Foreign Matter and Slurry Service

Many times foreign material such as pipe scale, welding beads, sand dust particles, etc. may damage the metal-to-metal seating surfaces in a valve of this type when it is open and flowing.

The Consolidated O-Ring seat seal is designed to absorb the impact of most foreign particles without damage.

Hot Water Boiler Service

When a safety relief valve opens hot water flashes into steam at the seating surfaces and solid particles which float to the water surface are driven against the seating surfaces at steam velocities. Consolidated O-Ring seat seal valves can withstand this type of service and remain tight to a greater degree than metal-to-metal seat valves.

Consolidated uses proven quality Teflon® O-Ring seats for this service. In some pressure/temperature applications, Teflon® is not resilient, and leakage may occur.

Benefits

Safety Relief Valve leakage which is aggravated by any cause is usually costly. In many cases, expensive product is lost and maintenance costs increased. Consolidated O-Ring seat seal valves are designed to eliminate leakage in troublesome applications and reduce overall costs. Should leakage occur, it is much simpler and less expensive to replace the O-Ring than to maintain metal-to-metal seats.

O-Ring Conversion

1900 Series Consolidated metal seated valves can be converted to O-Ring seat seals by installing a few basic parts provided in a conversion kit.

1900-DA soft seats without bellows

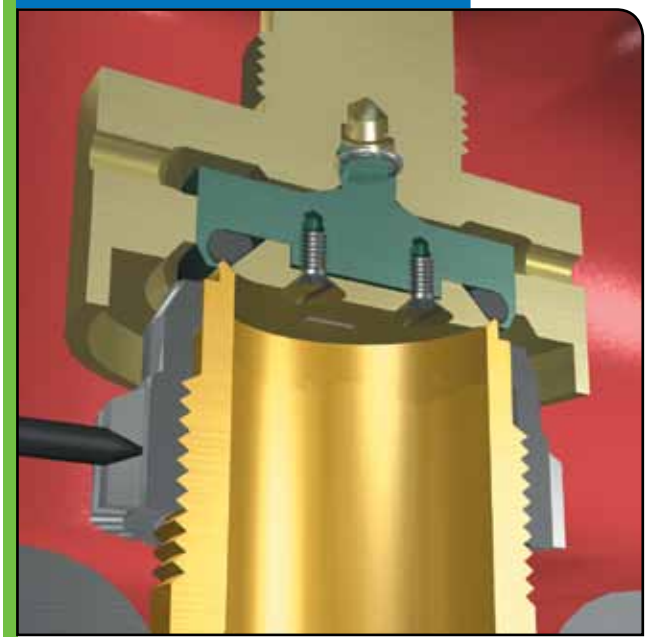

Scope of Design (Contd.)

1900 Soft Seat (DA) Option

The Double Seal Soft Seat

The double seal design incorporates the merits of both a soft seat and a metal seat design valve. The 45° metal seat provides the load bearing surface to transmit spring force, the slotted O-Ring retainer allows the O-Ring to be pressurized and accomplish the primary sealing function. This O-Ring seal design can be used throughout the full pressure range of the valve. For pressure/temperature ratings of the seal, refer to O-Ring Selection Table in this section (pages 1900.41 and 1900.42).

Tightness: Consolidated O-Ring seat seal valves are bubble tight at 95% of set pressures over 100 psig (6.89 barg).

The following table reflects the percent of set pressure (popping pressure) at which the valve will be bubble tight on air.

Bubble Tight Pressures

Set Pressure				Percent of Set Pressure
psig		barg		
min.	max.	min.	max.	
5	30	0.34	2.07	90%
31	50	2.14	3.45	92%
51	100	3.52	6.89	94%
101 to max. rating of valve		6.96 to max. rating of valve		95%

Consolidated O-Ring seat seals provide positive closure at service pressures closer to the set pressure than is possible with metal-to-metal seats assuring continuous, trouble-free service, and complete valve tightness after numerous “pops”

Note: The Consolidated 1900 O-Ring design features a secondary metal-to-metal seat which becomes effective if O-Ring integrity is lost due to external fire or other causes. The retainer is lapped to the nozzle at assembly assuring seat tightness.

1900 Soft Seat (DA)

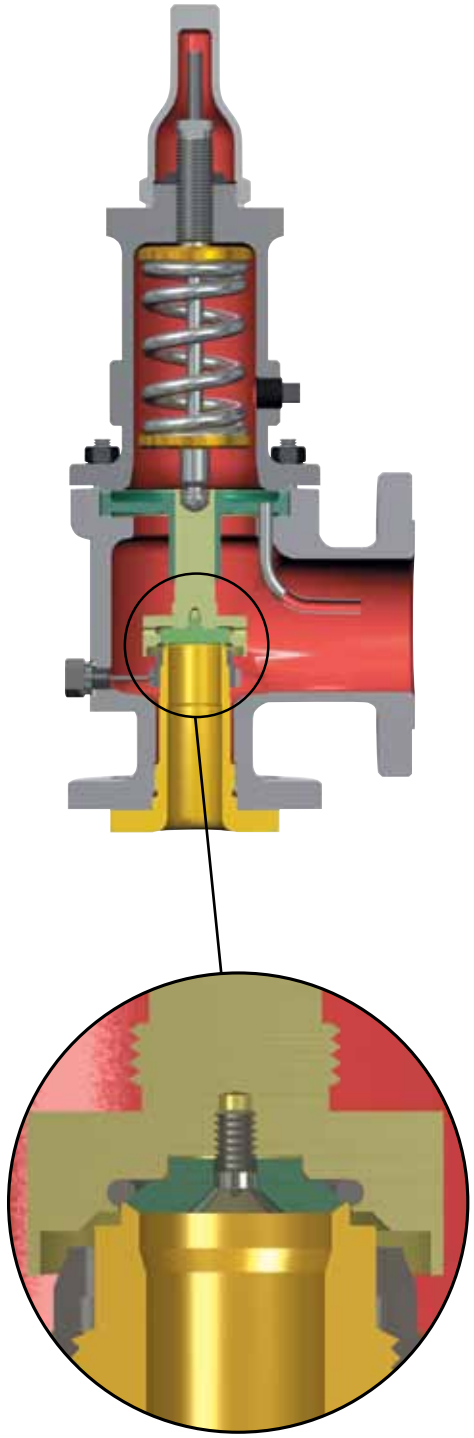

Scope of Design (Contd.)

1900 Soft Seat (DA) Option - How the Double Seal Works

Two unique features distinguish the Consolidated O-Ring seat seal safety valve from other designs. These are the 45° metal-to-metal load bearing seats and the slotted O-Ring retainer.

Double Seal

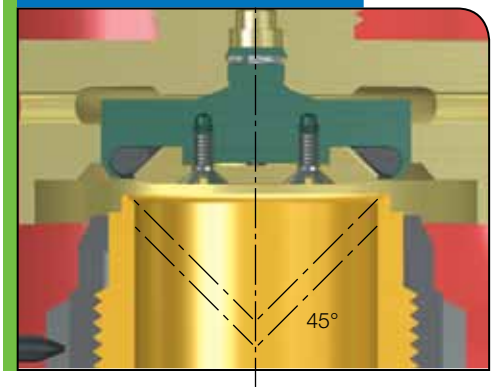

Three Essentials to a Tighter and More Secure Seal:

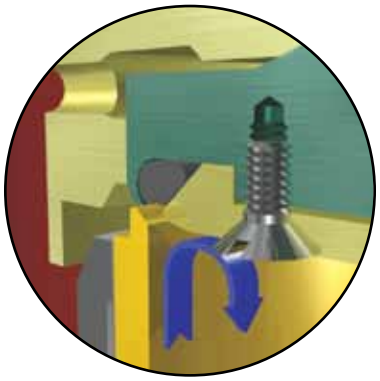

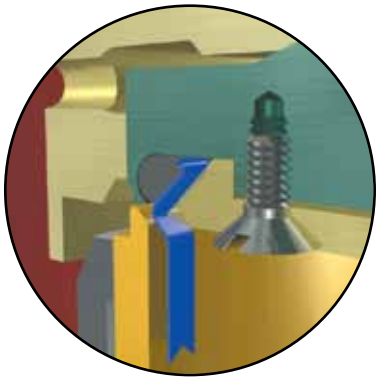



1) Concentric Alignment

The nozzle bore and O-Ring retainer are both machined to an angle of 45°. This ensures that as the valve disc opens and closes, the O-Ring is aligned concentrically against the lip of the nozzle. Close tolerance between the nozzle and the body, or the body and the disc guide and disc holder, also help to ensure a tight seal when the valve is closed. Accurate alignment coupled with the load bearing function of the O-Ring retainer virtually eliminates O-Ring abrasion from valve action.

2) Maximum Sealing Force

On the back side of the O-Ring retainer there are two small slots. When the valve is closed, process media enters between the machined seat of the nozzle and the O-Ring retainer and proceeds up the slots behind the O-Ring. This pressure forces the O-Ring against the lip of the nozzle and the curved recess of the disc holder. As the pressure within the valve rises to set point, the O-Ring is pressed tightly against the nozzle to maintain maximum sealing force until break-away pressure is reached.

3) O-Ring Retention

When the valve opens, the pressure behind the O-Ring escapes from the same two slots on the O-Ring retainer. This prevents the O-Ring from being ejected. Additionally, the O-Ring encapsulating retainer prevents the O-Ring from being pulled from its setting by the high velocity, low pressure discharge inside the upper valve body.

Materials

Conventional SRV 1900 Series

1900 Series Safety Relief Valve (Conventional Type)

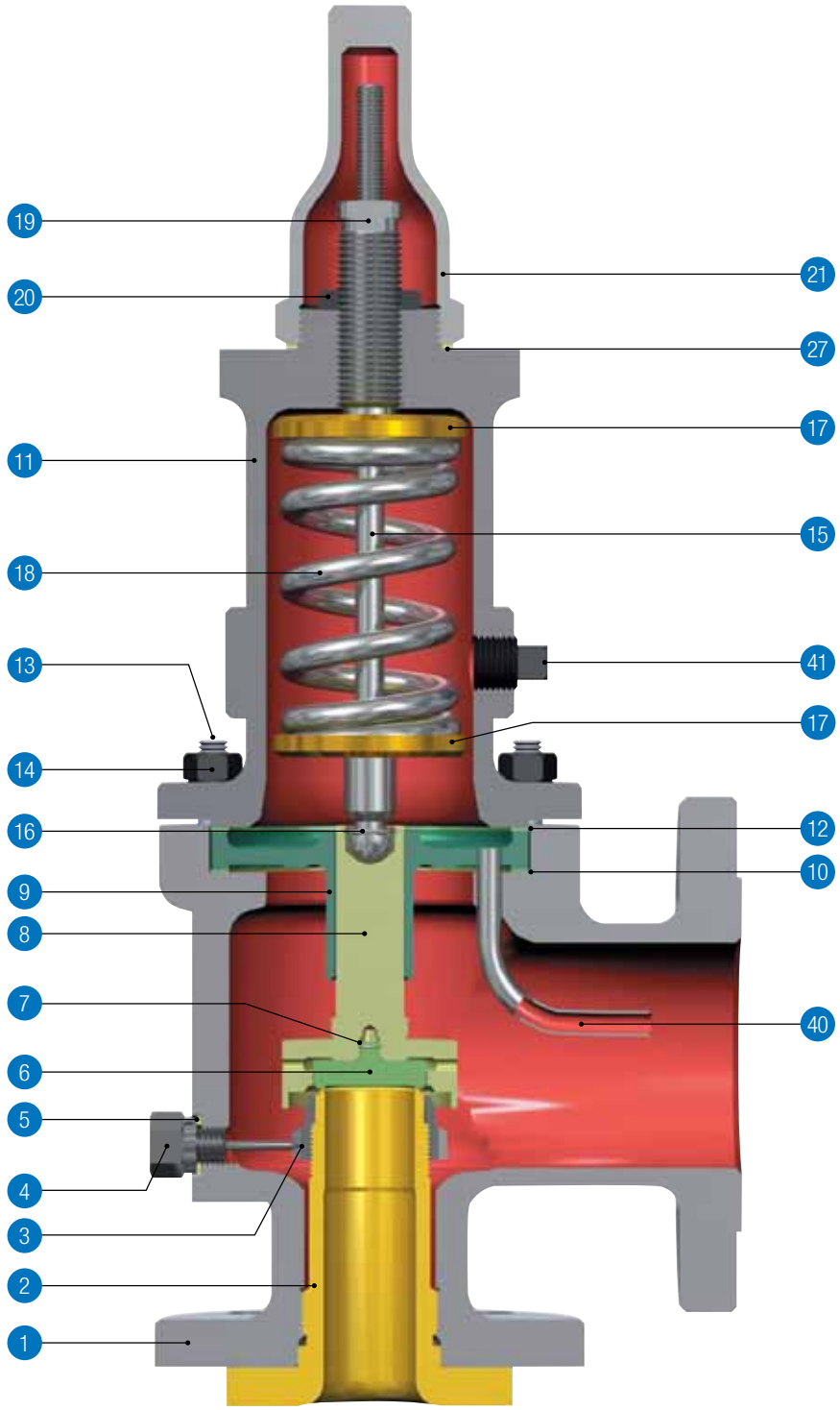

Materials (Contd.)

For Gas, Vapor and Liquid Service 1900 Series (Conventional)

SRV 1900 (Conventional) (D-U Orifices)

Part No.	Nomenclature	Conventional (Standard) Valve Material (-00)
1	Base	
	(1905-1918)	ASME SA216 WCC Carbon Steel
	(1920-1928)	ASME SA217 WC6 Alloy Steel
1A	Base Plug	
	(1905-1918)	Carbon Steel
	(1920-1928)	316 Stainless Steel
2	Nozzle	316 Stainless Steel
3	Adjusting Ring	316 Stainless Steel
4	Adjusting Ring Pin	316 Stainless Steel
5	Adjusting Ring Pin Gasket	Soft Iron
6	Disc	
	Solid Metal Flat Seat	316 Stainless Steel
	Thermodisc	616 Stainless Steel
7	Disc Retainer	Inconel X-750
8	Disc Holder	316 Stainless Steel
9	Guide	316 Stainless Steel
10	Guide Gasket	Soft Iron
11	Bonnet	ASME SA216 WCC Carbon Steel
12	Bonnet Gasket	Soft Iron
13	Base Stud	ASME SA193 B7 Alloy Steel
14	Stud Nut	ASME SA194 2H Carbon Steel
15	Spindle	410 Stainless Steel
16	Spindle Retainer	Inconel X-750
17	Spring Washer	Carbon Steel
18	Spring	
	(-450° to -76°F)	316 Stainless Steel
	(-75° to 800°F)	Alloy Steel
	(801° to 1000°F)	Tungsten Steel or Inconel X-750
19	Adjusting Screw	416 Stainless Steel
20	Adjusting Screw Nut	416 Stainless Steel
21	Screwed Cap	Carbon Steel
22	Bolted Cap	Carbon Steel
23	Packed Cap	Carbon Steel
24	Plain Cap	Malleable Iron
25	Cap Bolt	Carbon Steel
26	Cap Set Screw	Carbon Steel
27	Cap Gasket	Soft Iron
28	Release Nut	Carbon Steel
29	Release Locknut	Carbon Steel
30	Lever (Packed & Plain)	Malleable Iron
31	Lifting Fork	Malleable Iron
32	Lever Shaft	410/416 Stainless Steel
33	Packing	316 Stainless Steel[1]
34	Packing Nut	410/416 Stainless Steel
35	Top Lever	Malleable Iron
36	Drop Lever	Malleable Iron
37	Gag	Carbon Steel
38	Sealing Plug	Carbon Steel
39	Sealing Plug Gasket	Soft Iron
40	Eductor Tube	316 Stainless Steel
41	Bonnet Plug	Carbon Steel
42	Limit Washer (D-2 & E-2)	316 Stainless Steel

SRV 1900 (Conventional) (V & W Orifices)

Part No.	Nomenclature	Conventional (Standard) Valve Material (-00)
3	Adjusting Ring	410 Stainless Steel
8	Disc Holder	
	(1905-1910)	316 Stainless Steel
	(1920)	316 Stainless Steel (Boronized)
9	Guide	
	(1905-1910)	410 Stainless Steel
	(1920)	316 Stainless Steel (Boronized)
36	Drop Lever	Carbon Steel
48	Guide Rings (Not Shown)	Teflon
49	Disc Retainer Screw (Not Shown)	316 Stainless Steel
50	Retainer Screw Locknut (Not Shown)	316 Stainless Steel
51	Compression Screw (Not Shown)	616 Stainless Steel
52	Compression Screw Locknut Gasket (Not Shown)	Soft Iron
53	Spring Plunger (Not Shown)	616 Stainless Steel
	Plunger Rings (Not Shown)	Teflon

Notes:

1 with Flexible Graphite Fillers (Spiral Wound).

Materials (Contd.)

Conventional SRV 1900-30 Series (Bellows)

1900-30 Series Safety Relief Valve (Bellows Type)

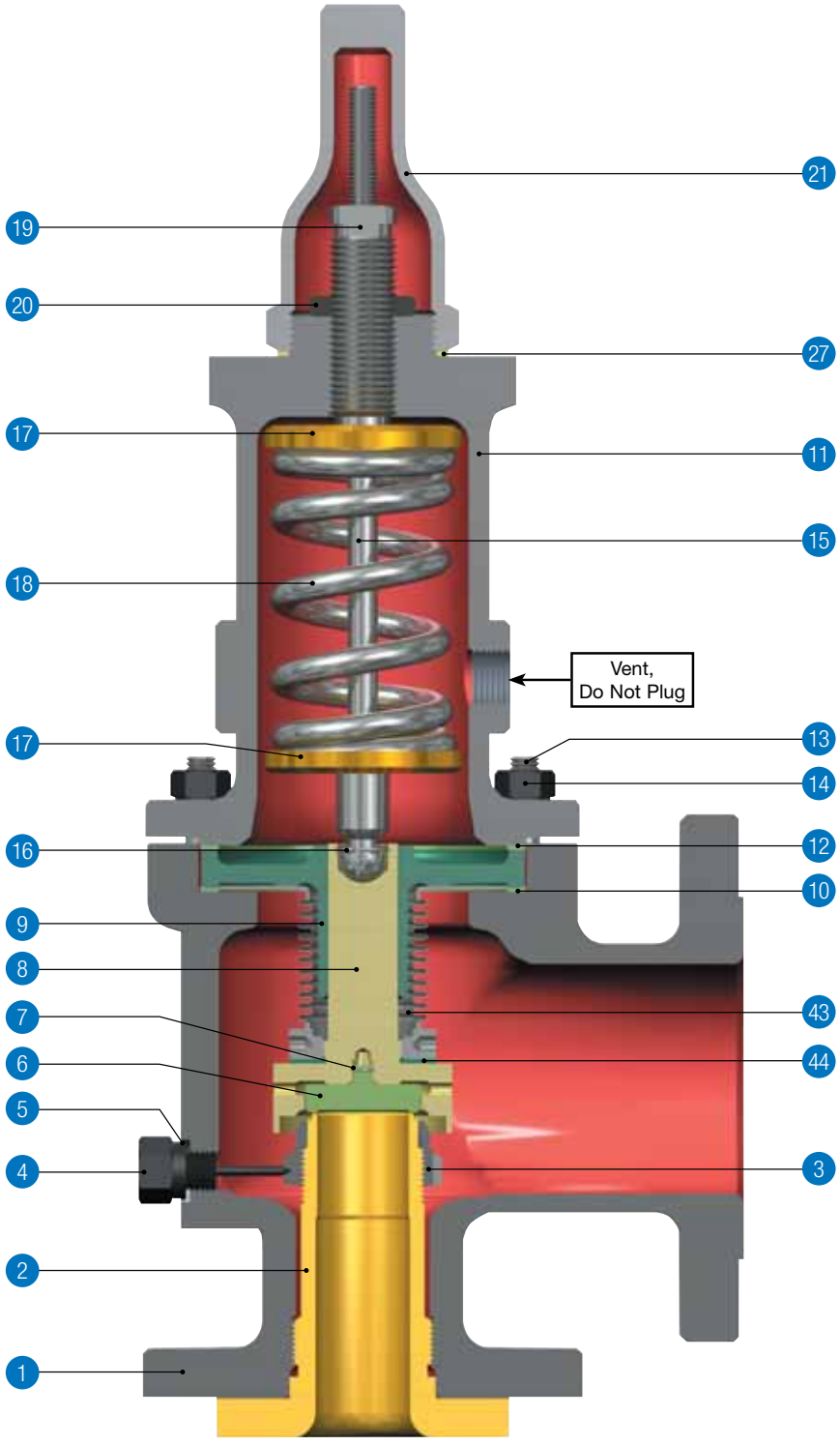

Materials (Contd.)

For Gas, Vapor, and Liquid Service1900-30 Series

SRV 1900 Bellows (D - U Orifices)

Part No.	Nomenclature	Bellows Valve Material (-30)
1	Base	
	(1905-1918)	ASME SA216 WCC Carbon Steel
	(1920-1928)	ASME SA217 WC6 Alloy Steel
1A	Base Plug	
	(1905-1918)	Carbon Steel
	(1920-1928)	316 Stainless Steel
2	Nozzle	316 Stainless Steel
3	Adjusting Ring	316 Stainless Steel
4	Adjusting Ring Pin	316 Stainless Steel
5	Adjusting Ring Pin Gasket	Soft Iron
6	Disc	
	Solid Metal Flat Seat	316 Stainless Steel
	Thermodisc	616 Stainless Steel
7	Disc Retainer	Inconel X-750
8	Disc Holder	316 Stainless Steel
9	Guide	316 Stainless Steel
10	Guide Gasket	Soft Iron
11	Bonnet	ASME SA216 WCC Carbon Steel
12	Bonnet Gasket	Soft Iron
13	Base Stud	ASME SA193 B7 Alloy Steel
14	Stud Nut	ASME SA194 2H Carbon Steel
15	Spindle	410 Stainless Steel
16	Spindle Retainer	Inconel X-750
17	Spring Washer	Carbon Steel
18	Spring	
	(-450° to -76°F)	316 Stainless Steel
	(-75° to 800°F)	Alloy Steel
	(801° to 1000°F)	Tungsten Steel or Inconel X-750
19	Adjusting Screw	416 Stainless Steel
20	Adjusting Screw Nut	416 Stainless Steel
21	Screwed Cap	Carbon Steel
22	Bolted Cap	Carbon Steel
23	Packed Cap	Carbon Steel
24	Plain Cap	Malleable Iron
25	Cap Bolt	Carbon Steel
26	Cap Set Screw	Carbon Steel
27	Cap Gasket	Soft Iron
28	Release Nut	Carbon Steel
29	Release Locknut	Carbon Steel
30	Lever (Packed & Plain)	Malleable Iron
31	Lifting Fork	Malleable Iron
32	Lever Shaft	410/416 Stainless Steel
33	Packing	316 Stainless Steel[1]
34	Packing Nut	410/416 Stainless Steel
35	Top Lever	Malleable Iron
36	Drop Lever	Malleable Iron
37	Gag	Carbon Steel
38	Sealing Plug	Carbon Steel
39	Sealing Plug Gasket	Soft Iron
42	Limit Washer (D-2 & E-2)	316 Stainless Steel
43	Bellows	Inconel 625 LCF
43	Bellows Nut	316L Stainless Steel
43	Bellows Flange	316L Stainless Steel
44	Bellows Gasket	Soft Iron

SRV 1900 Bellows (V & W Orifices)

Part No.	Nomenclature	Bellows Valve Material (-30)
3	Adjusting Ring	410 Stainless Steel
8	Disc Holder	
	(1905-1910)	316 Stainless Steel
	(1920)	316 Stainless Steel (Boronized)
9	Guide	
	(1905-1910)	410 Stainless Steel
	(1920)	316 Stainless Steel (Boronized)
20	Compression Screw Nut	416 Stainless Steel
36	Drop Lever	Carbon Steel
45	Bellows Bolts (Not Shown)	ASME SA193 B7 Alloy Steel
46	Bellows Bolts Lock Washers (Not Shown)	316 Stainless Steel
47	Overlift Restrictor (Not Shown)	410 Stainless Steel
48	Guide Rings (Not Shown)	Teflon
49	Disc Retainer Screw (Not Shown)	316 Stainless Steel
50	Retainer Screw Locknut (Not Shown)	316 Stainless Steel
51	Compression Screw (Not Shown)	616 Stainless Steel
52	Compression Screw Locknut Gasket (Not Shown)	Soft Iron
53	Spring Plunger (Not Shown)	616 Stainless Steel
	Plunger Rings (Not Shown)	Teflon

Notes:

1 with Flexible Graphite Fillers (Spiral Wound).

Materials (Contd.)

Conventional SRV 1900-35 Series (Balanced Bellows)

1900-35 Series Safety Relief Valve

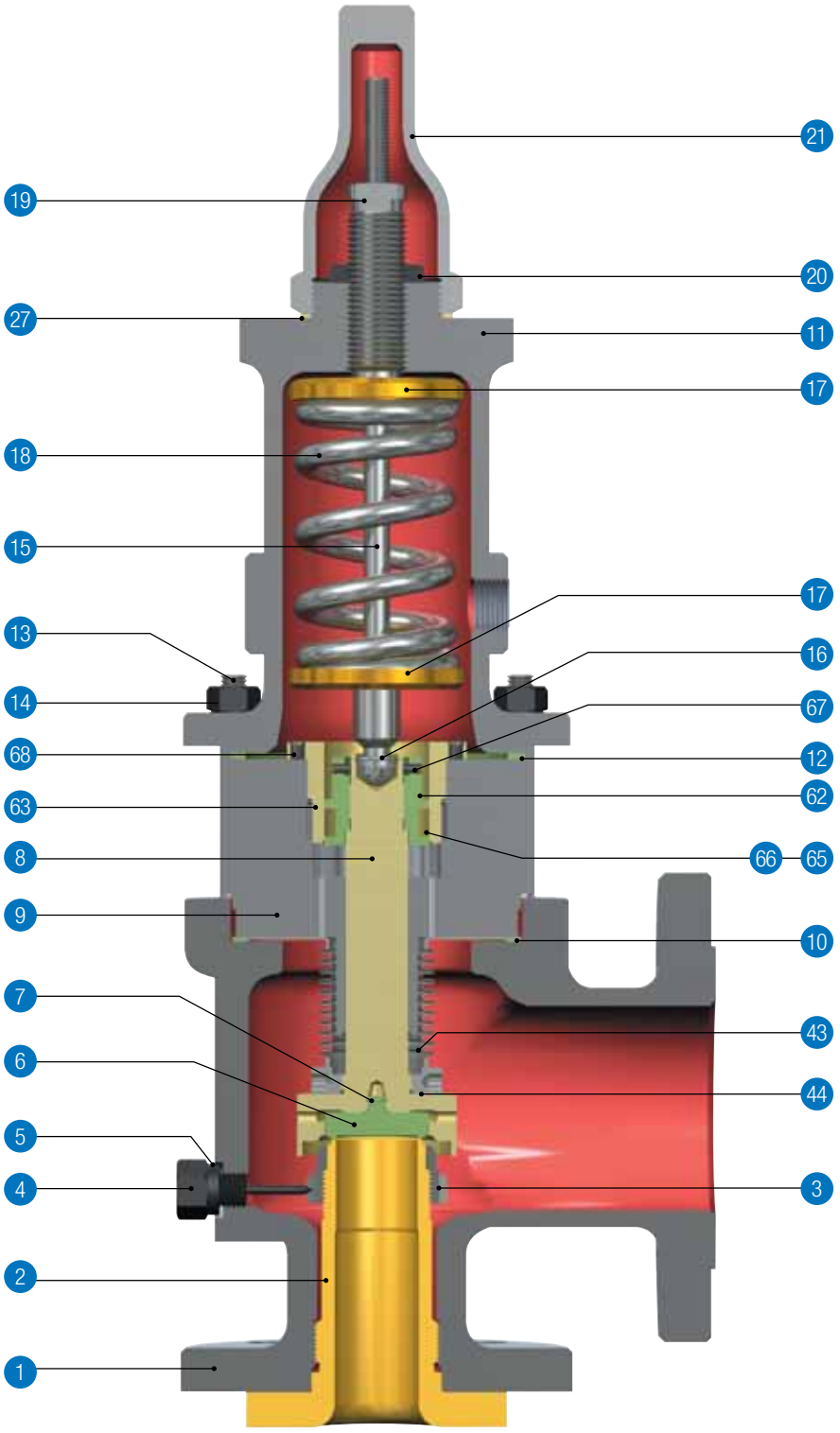

Materials (Contd.)

For Gas, Vapor, and Liquid Service1900-35 Series

SRV 1900 Balanced Bellows

Part No.	Nomenclature	Balanced Bellows Valve Material (-35)[1]
1	Base	
	(1905-1918)	ASME SA216 WCC Carbon Steel
	(1920-1928)	ASME SA217 WC6 Alloy Steel
1A	Base Plug	
	(1905-1918)	Carbon Steel
	(1920-1928)	316 Stainless Steel
2	Nozzle	316 Stainless Steel
3	Adjusting Ring	316 Stainless Steel
4	Adjusting Ring Pin	316 Stainless Steel
5	Adjusting Ring Pin Gasket	Soft Iron
6	Disc	
	Solid Metal Flat Seat	316 Stainless Steel
	Thermodisc	616 Stainless Steel
7	Disc Retainer	Inconel X-750
8	Disc Holder	316 Stainless Steel
9	Guide	316 Stainless Steel
10	Guide Gasket	Soft Iron
11	Bonnet	ASME SA216 WCC Carbon Steel
12	Bonnet Gasket	Soft Iron
13	Base Stud	ASME SA193 B7 Alloy Steel
14	Stud Nut	ASME SA194 2H Carbon Steel
15	Spindle	410 Stainless Steel
16	Spindle Retainer	Inconel X-750
17	Spring Washer	Carbon Steel
18	Spring	
	(-450° to -76°F)	316 Stainless Steel
	(-75° to 800°F)	Alloy Steel
	(801° to 1000°F)	Tungsten Steel or Inconel X-750
19	Adjusting Screw	416 Stainless Steel
20	Adjusting Screw Nut	416 Stainless Steel
21	Screwed Cap	Carbon Steel
22	Bolted Cap	Carbon Steel
23	Packed Cap	Carbon Steel
24	Plain Cap	Malleable Iron
25	Cap Bolt	Carbon Steel

SRV 1900 Balanced Bellows (Contd.)

Part No.	Nomenclature	Balanced Bellows Valve Material (-35)[1]
26	Cap Set Screw	Carbon Steel
27	Cap Gasket	Soft Iron
28	Release Nut	Carbon Steel
29	Release Locknut	Carbon Steel
30	Lever	Malleable Iron
31	Lifting Fork	Malleable Iron
32	Lever Shaft	410/416 Stainless Steel
33	Packing	316 Stainless Steel[2]
34	Packing Nut	410/416 Stainless Steel
35	Top Lever	Malleable Iron
36	Drop Lever	Malleable Iron
37	Gag	Carbon Steel
38	Sealing Plug	Carbon Steel
39	Sealing Plug Gasket	Soft Iron
42	Limit Washer (D-2 & E-2)	316 Stainless Steel
43	Bellows	Inconel 625 LCF
43	Bellows Nut	316L Stainless Steel
43	Bellows Flange	316L Stainless Steel
44	Bellows Gasket	Soft Iron
62	Piston	304 Stainless Steel
63	Piston Guide	316 Stainless Steel
64	Piston Retainer Ring (D-F only) (Not Shown)	Inconel X-750
65	Seal Ring	Graphitar Grade 67
66	Seal Ring Expander	410 Stainless Steel
67	Piston Lock Screw	18-8 Stainless Steel
68	Piston Guide lock Screw	18-8 Stainless Steel
69	Piston Plate (D-F only) (Not Shown)	316 Stainless Steel

Notes:

1 Other material variations are available. Balanced piston components will be per the bellows "-30" type, except in "X3" and "X4" variations. (S3, S4, etc.). In these cases, the materials for the piston, lock screws, seal ring expander, and piston guide may be changed. The Seal Ring will remain as Graphitar Grade 67.

2 with Flexible Graphite Fillers (Spiral Wound).

Materials (Contd.)

1900 Soft Seat (DA) Option

1900 Soft Seat (DA) Safety relief Valve

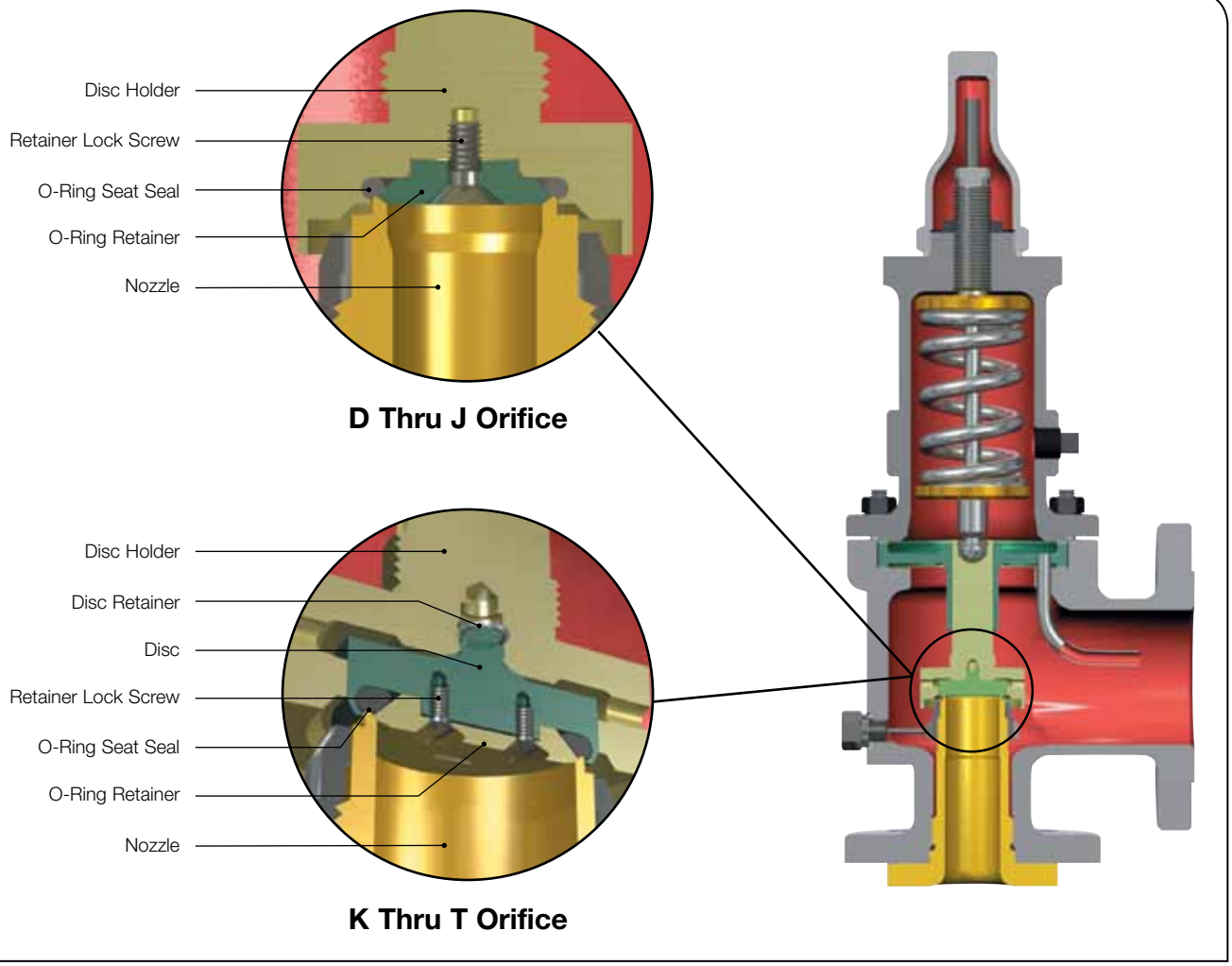

Standard Material for 1900 Soft Seat (DA) Safety Relief Valves

Part Name	Materials[1]
Disc (K-T Orifice)	316 Stainless Steel
Disc Holder[2]	316 Stainless Steel
Bonnet	ASME SA352 LCC CS
Disc Retainer	Inconel X750
O-Ring Retainer[3]	316 Stainless Steel
Retainer Lock Screw (Not Shown)[3]	316 Stainless Steel
O-Ring Seat Seal	Select[4]

Note 1 Balance of Materials same as 1900 standard construction

Note 2 Disc Holder material for D-J orifice, will be Monel for “M” variations and Hastelloy C for “H” variations.

Note 3 O-Ring Retainer material will be Monel for “M” variations and Hastelloy C for “H” variations. The retainer lock screw will be Monel with Nylon locking feature in the “M” variations and Hastelloy C with Nylon locking feature in the “H” variations.

Note 4 Refer to pages 1900.41 & 1900.42 for O-Ring Selection (Durometer and Temperature Limits). See Technical Information Section for application.

Materials (Contd.)

1900 Steam Trim (TD) Option

1900 Steam Trim (TD) Safety Relief Valve

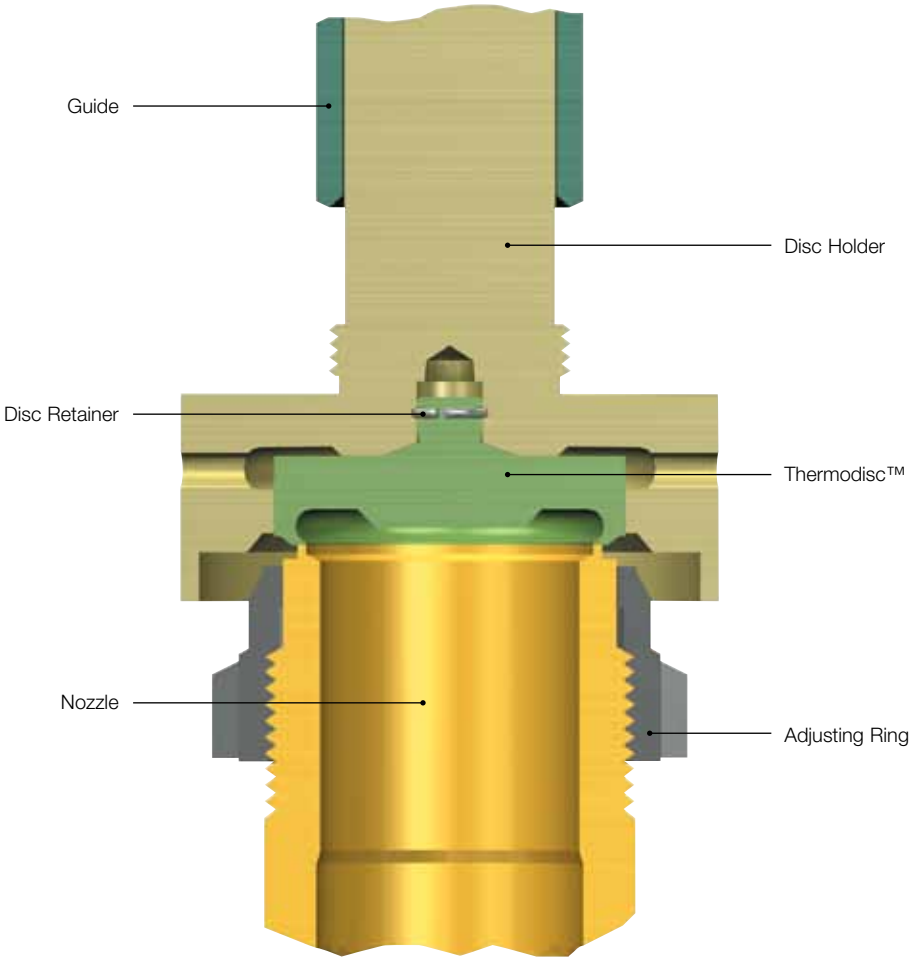

Standard Material for 1900 Steam Trim (TD) Safety Relief Valves

Part Name	Materials[1]
Nozzle	316 Stainless Steel
Thermodisc™	616 Stainless Steel
Disc Retainer	Inconel X750
Disc Holder	316 Stainless Steel
Guide	316 Stainless Steel
Adjusting Ring	316 Stainless Steel

Notes:

1 Balance of materials same as 1900 standard construction.

Materials (Contd.)

1900 Liquid Trim (LA) Option

1900 Liquid Trim (LA) Safety Relief Valve

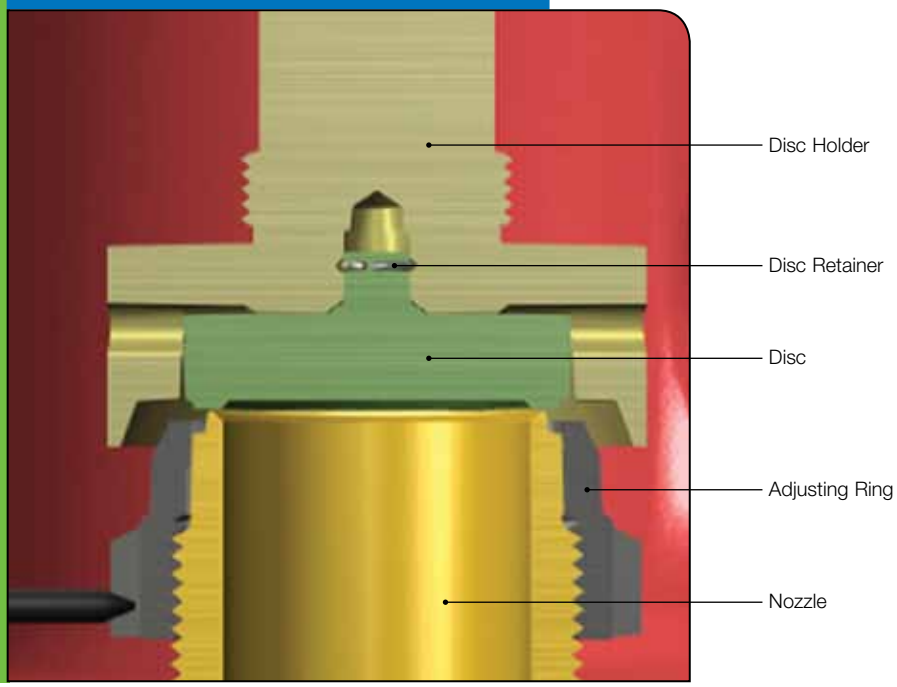

Standard Material for 1900 Liquid Trim (LA) Safety Relief Valves

Part Name	Materials[1]
Nozzle	316 Stainless Steel
Disc	316 Stainless Steel
Disc Retainer	Inconel X750
Disc Holder	316 Stainless Steel
Guide	316 Stainless Steel
Adjusting Ring	316 Stainless Steel

Notes:

1 Balance of materials same as 1900 standard construction.

Materials (Contd.)

1900 Special Material & Service Options

The 1900 Flanged Series offers various material options to satisfy customer needs and API standards. The most common options are listed in this section.
These material options are not the only available options however. Inquire of Dresser Measurement for options not listed here. Specify the material construction classification using the construction variations such as: S2, H4, etc.

Options included are:	Page Number
• Sour Gas Service (SG1, SG10, SG5 and SG15)	1900.29
• Hydrofluoric Acid Service (HA)	1900.31
• Stainless Steel (S2, S3 and S4)	1900.32
• Alloy 20 (A1, A2, A3 and A4)	1900.34
• Monel (M1, M1½(MB), M2, M3 and M4)	1900.35
• Hastelloy C (H1, H2, H3 and H4)	1900.36
• Duplex (D1, D2, D3 and D4)	1900.37
• Low Temperature - Process Fluid (L1, L2, and L3) (For media temperatures to -450°F or -268°C)	1900.39
• Low Temperature - Ambient (C1 and C2) (For ambient temperatures to -50°F or -45.6°C)	1900.40
• High Temperature (T1 & T2) (For media temperatures to 1500°F or 816°C)	1900.41
• Lethal Service	1900.42
• O-Ring Selection	1900.43

Many other special options are available not necessarily of a material nature. These include, but are not limited to, special facings on connections or special connections. Contact the factory for any special requirements you may have.

1900 Sour Gas (SG) Trims

Material requirements of NACE Standard MR0103-2003 are applicable to systems handling sour gas if the total operating pressure of the system is 65 psia or greater and if the partial pressure of H2S in the gas is 0.05 psia or greater.

The SG10 (non-bellows) and SG15 (bellows) material selections are satisfactory for applications in which the valve secondary pressure (outlet side) does not exceed 65 psia (50 psig (3.45 barg)). Under valve relieving conditions, 50 psig (3.45 barg) secondary pressure would not normally be exceeded until the valve set pressure exceeds 450 psig (31.03 barg).

The SG1 (non-bellows) and SG5 (bellows) material selections comply with NACE standard MR0103-2003.

Specific applications may be referred to the factory for recommendations.

Materials (Contd.)

1900 Sour Gas (SG) Trims (Contd.)

Special Materials, Sour Gas Service[1 & 2]

Component	Construction Variation			
	Conventional Valves		Bellows Valves	
	SG1[3]	SG10[4]	SG5[3]	SG15[4]
Base (1905-1918), Bonnet	ASME SA216 WCC CS	ASME SA216 WCC CS	ASME SA216 WCC CS	ASME SA216 WCC CS
Base (1920-1928)	ASME SA217 WC6 AS	ASME SA217 WC6 AS	ASME SA217 WC6 AS	ASME SA217 WC6 AS
Base Plug (1905-1918)	Carbon Steel	Carbon Steel	Carbon Steel	Carbon Steel
Base Plug (1920-1928), Nozzle	316 Stainless Steel	316 Stainless Steel	316 Stainless Steel	316 Stainless Steel
Adjusting Ring, Adjusting Ring Pin	316 Stainless Steel	316 Stainless Steel	316 Stainless Steel	316 Stainless Steel
Adjusting Ring Pin Gasket	Soft Iron	Soft Iron	Soft Iron	Soft Iron
Disc - Solid Metal Flat Seat, Disc Holder	316 Stainless Steel	316 Stainless Steel	316 Stainless Steel	316 Stainless Steel
Disc - Thermodisc, Disc Retainer	Inconel X-750	Inconel X-750	Inconel X-750	Inconel X-750
Guide, Limit Washer (D-2 & E-2)	316 Stainless Steel	316 Stainless Steel	316 Stainless Steel	316 Stainless Steel
Guide Gasket, Bonnet Gasket	Soft Iron	Soft Iron	Soft Iron	Soft Iron
Base Stud	ASME SA193 B7 AS	ASME SA193 B7 AS	ASME SA193 B7 AS	ASME SA193 B7 AS
Stud Nut	ASME SA194 2H CS	ASME SA194 2H CS	ASME SA194 2H CS	ASME SA194 2H CS
Spindle	316 Stainless Steel	410 Stainless Steel	410 Stainless Steel	410 Stainless Steel
Spindle Retainer	Inconel X-750	Inconel X-750	Inconel X-750	Inconel X-750
Spring Washer	316 Stainless Steel	Carbon Steel	Carbon Steel	Carbon Steel
Spring	Inconel X-750	Alloy Steel[5]	Alloy Steel[5]	Alloy Steel[5]
Adjusting Screw, Adjusting Screw Nut	316 Stainless Steel	416 Stainless Steel	416 Stainless Steel	416 Stainless Steel
Screwed Cap, Bolted Cap, Gag	Carbon Steel	Carbon Steel	Carbon Steel	Carbon Steel
Packed Cap, Cap Bolt	Carbon Steel	Carbon Steel	Carbon Steel	Carbon Steel
Plain Cap, Lever, Lifting Fork	Malleable Iron	Malleable Iron	Malleable Iron	Malleable Iron
Cap Set Screw, Sealing Plug	Carbon Steel	Carbon Steel	Carbon Steel	Carbon Steel
Cap Gasket, Sealing Plug Gasket	Soft Iron	Soft Iron	Soft Iron	Soft Iron
Release Nut, Release Locknut	Carbon Steel	Carbon Steel	Carbon Steel	Carbon Steel
Lever Shaft, Packing Nut	410/416 Stainless Steel	410/416 Stainless Steel	410/416 Stainless Steel	410/416 Stainless Steel
Packing	316 Stainless Steel[7]	316 Stainless Steel[7]	316 Stainless Steel[7]	316 Stainless Steel[7]
Top Lever, Drop Lever	Malleable Iron	Malleable Iron	Malleable Iron	Malleable Iron
Eductor Tube	316 Stainless Steel	316 Stainless Steel	Not Applicable	Not Applicable
Bonnet Plug	Carbon Steel	Carbon Steel	Not Applicable	Not Applicable
Bellows	Not Applicable	Not Applicable	Inconel 625 LCF[6]	Inconel 625 LCF
Bellows Nut, Bellows Flange	Not Applicable	Not Applicable	316L Stainless Steel	316L Stainless Steel
Bellows Gasket	Not Applicable	Not Applicable	Soft Iron	Soft Iron

Notes:

1. The materials in red denote variation from standard material construction.
2. Compliance to NACE MR0175 requires media and materials evaluation. Please contact factory sales.
3. (SG1) and (SG5) valves are for installations for compliance to NACE MR0103-2003 and prior editions.
4. (SG10) and (SG15) valves are for installations where the outlet of the valve is not in a Sour Gas environment per NACE MR-01-75 (Pressures on the outlet side does not exceed 65 psia under relieving conditions).
5. Spring is Aluminum Metallized.
6. Heat treated.
7. with Flexible Graphite Fillers (Spiral Wound).

Materials (Contd.)

1900 Hydrofluoric Acid (HA) Service

To meet the demanding requirements of the extremely corrosive HF Alky service, Dresser Measurement has, in conjunction with major designers and users in this industry, developed the 1900 HA variation. Extensive use of Monel Alloy 400, in the stress relieved condition for critical components, has been utilized for this option.

NACE document 5A171 states, "In practice, occurrence of stress corrosion cracking may either be avoided by complete exclusion of oxygen or may be minimized by stress relieving welded or cold formed parts." The HA materials should not be confused with the M1 through the M4 materials used for other corrosive applications.

In addition to the special stress relieved conditioned Monel 400 materials, a bellows seal and litharged cured soft seat has been incorporated into this option. Long term applications have provided excellent results in the most severe, moist, aerated, HF Alky service.

Special Materials, Hydrofluoric Acid Service (HA)[1 & 2]

Component	Bellows Valve Material (-30)	Component	Bellows Valve Material (-30)
Base (1905-1918)	ASME SA216 WCC CS[3]	Plain Cap	Malleable Iron
Base Plug (1905-1918)	Carbon Steel	Cap Bolt	Carbon Steel
Nozzle	Monel 400[3]	Cap Set Screw	Carbon Steel
Adjusting Ring	Monel 400	Cap Gasket	Monel 400
Adjusting Ring Pin	Monel 400	Release Nut	Carbon Steel
Adjusting Ring Pin Gasket	Monel 400	Release Locknut	Carbon Steel
Disc - Solid Metal Flat Seat	Monel 400[3]	Lever	Malleable Iron
Disc Retainer	Inconel X-750	Lifting Fork	Malleable Iron
Disc Holder	Monel 400[4]	Lever Shaft	410 Stainless Steel
Guide	Monel 400	Packing	316 Stainless Steel[5]
Guide Gasket	Monel 400	Packing Nut	410 Stainless Steel
Bonnet	ASME SA216 WCC CS	Top Lever	Malleable Iron
Bonnet Gasket	Monel 400	Drop Lever	Malleable Iron
Base Stud	ASTM F468 Nickel Alloy 500	Gag	Carbon Steel
Stud Nut	ASTM F467 Nickel Alloy 500	Sealing Plug	Carbon Steel
Spindle	Monel 400	Sealing Plug Gasket	Monel 400
Spindle Retainer	Inconel X-750	Limit Washer (D-2 & E-2)	Monel 400
Spring Washer	Carbon Steel	Bellows	Monel 400[4]
Spring	Carbon Steel (Nickel Plated)	Bellows Nut	Monel 400[4]
Adjusting Screw	Monel 400	Bellows Flange	Monel 400[4]
Adjusting Screw Nut	Monel 400	Bellows Gasket	Garlock Gylon 35101
Screwed Cap	Carbon Steel	O-ring Retainer	Monel 400[4]
Bolted Cap	Carbon Steel	Retainer Lock Screw	Monel 400 with Nylon Lock Feature
Packed Cap	Carbon Steel	O-Ring	Kalrez Spectrum 6375

Notes:

1. The materials in red denote variation from standard material construction.
2. To specify valves, add material designation to the valve type, 1910L/HA or 1910-30L/HA.
3. (Including Supplement S5)
   PWHT is required for weld repairs per ASTM A216 paragraph 10, or if C.E. is above 0.40. Carbon equivalent shall be determined per ASTM A216, S11.2. Weld PQR shall include hardness test of PWHT area. Test piece to confirm that weld and weld heat-affected-zone hardnesses are 200 brinell maximum.
4. Stress relieved.
5. with Flexible Graphite Fillers (Spiral Wound).

Materials (Contd.)

Corrosive Service

Corrosive Service, Stainless Steel Material (D-U Orifice)[1&2]

Component	Construction Variation		
	S2	S3	S4
Common Components (-00 & -30)			
Base (1905-1918), Bonnet	ASME SA216 WCC CS	ASME SA351 CF8M SS	ASME SA351 CF8M SS
Base (1920-1928)	ASME SA217 WC6 AS	ASME SA351 CF8M SS	ASME SA351 CF8M SS
Base Plug (1905-1918), Release Nut, Sealing Plug	Carbon Steel	316 Stainless Steel	316 Stainless Steel
Base Plug (1920-1928), Nozzle	316 Stainless Steel	316 Stainless Steel	316 Stainless Steel
Adjusting Ring, Adjusting Ring Pin	316 Stainless Steel	316 Stainless Steel	316 Stainless Steel
Adjusting Ring Pin Gasket, Guide Gasket	Monel	Monel	Monel
Disc - Solid Metal Flat Seat, Disc Holder	316 Stainless Steel	316 Stainless Steel	316 Stainless Steel
Disc - Thermodisc	616 Stainless Steel	616 Stainless Steel	616 Stainless Steel
Disc Retainer, Spindle Retainer	Inconel X-750	Inconel X-750	Inconel X-750
Guide, Limit Washer (D-2 & E-2)	316 Stainless Steel	316 Stainless Steel	316 Stainless Steel
Base Stud	ASME SA193 B7 AS	ASME SA193 B8M SS	ASME SA193 B8M SS
Stud Nut	ASME SA194 2H CS	ASME SA194 8M SS	ASME SA194 8M SS
Spring Washer, Release Locknut	Carbon Steel	Carbon Steel	316 Stainless Steel
Spring (-20° to 800°F)	Alloy Steel	Alloy Steel	316 Stainless Steel
Spring (801° to 1000°F)	Tungsten Steel[3]	Tungsten Steel[3]	316 Stainless Steel
Screwed Cap, Bolted Cap, Packed Cap	Carbon Steel	316 Stainless Steel	316 Stainless Steel
Plain Cap, Lifting Fork	Malleable Iron	316 Stainless Steel	316 Stainless Steel
Cap Bolt	Carbon Steel	ASME SA193 B8M SS	ASME SA193 B8M SS
Cap Set Screw	Carbon Steel	B8M Stainless Steel	B8M Stainless Steel
Cap Gasket, Sealing Plug Gasket	Monel	Monel	Monel
Lever, Top Lever, Drop Lever	Malleable Iron	Malleable Iron	Malleable Iron
Lever Shaft, Packing Nut	410/416 Stainless Steel	316 Stainless Steel	316 Stainless Steel
Packing	316 Stainless Steel[4]	316 Stainless Steel[4]	316 Stainless Steel[4]
Gag	Carbon Steel	Carbon Steel	Carbon Steel
Conventional (Standard) Valve Components (-00)			
Bonnet Gasket	Monel	Monel	Monel
Spindle, Adjusting Screw	316 Stainless Steel	316 Stainless Steel	316 Stainless Steel
Adjusting Screw Nut, Eductor Tube	316 Stainless Steel	316 Stainless Steel	316 Stainless Steel
Bonnet Plug	Carbon Steel	316 Stainless Steel	316 Stainless Steel
Bellows Valve Components (-30)			
Bonnet Gasket	Soft Iron	Monel	Monel
Spindle, Adjusting Screw	410 Stainless Steel	316 Stainless Steel	316 Stainless Steel
Adjusting Screw Nut	416 Stainless Steel	316 Stainless Steel	316 Stainless Steel
Bellows	Inconel 625 LCF	Inconel 625 LCF	Inconel 625 LCF
Bellows Nut, Bellows Flange	316L Stainless Steel	316L Stainless Steel	316L Stainless Steel
Bellows Gasket	Monel	Monel	Monel

Notes:

1. The materials in red denote variation from standard material construction.
2. To specify valves, add material designation to the valve type, 1910L/S3 or 1910-30L/S3.
3. or Inconel X-750
4. with Flexible Graphite Fillers (Spiral Wound).

Materials (Contd.)

Corrosive Service (Contd.)

Corrosive Service, Stainless Steel Material (V & W Orifice)[1&2]

Component	Construction Variation		
	S2	S3	S4
Common Components (-00 & -30)			
Base(1905-1910)	ASME SA216 WCC CS	ASME SA351 CF8M SS	ASME SA351 CF8M SS
Base(1920-1928)	ASME SA217 WC6 AS	ASME SA351 CF8M SS	ASME SA351 CF8M SS
Base Plug (1905-1910), Screwed Cap, Bolted Cap	Carbon Steel	316 Stainless Steel	316 Stainless Steel
Packed Cap, Cap Set Screw, Release Nut	Carbon Steel	316 Stainless Steel	316 Stainless Steel
Release Locknut, Sealing Plug	Carbon Steel	316 Stainless Steel	316 Stainless Steel
Base Plug (1920-1928), Nozzle, Adjusting Ring	316 Stainless Steel	316 Stainless Steel	316 Stainless Steel
Adjusting Ring Pin, Disc - Solid Metal Flat Seat	316 Stainless Steel	316 Stainless Steel	316 Stainless Steel
Disc Retainer Screw, Retainer Screw Locknut	316 Stainless Steel	316 Stainless Steel	316 Stainless Steel
Disc Holder - (1905-1910), Spindle	316 Stainless Steel	316 Stainless Steel	316 Stainless Steel
Compression Screw Nut, Guide (1905-1910)	316 Stainless Steel	316 Stainless Steel	316 Stainless Steel
Adjusting Ring Pin Gasket, Guide Gasket, Cap Gasket	Monel	Monel	Monel
Compression Screw Locknut Gasket, Sealing Plug Gasket	Monel	Monel	Monel
Disc - Thermodisc, Spring Plunger, Compression Screw	616 Stainless Steel	616 Stainless Steel	616 Stainless Steel
Disc Holder (1920-1928), Guide (1920-1928)	316 Stainless Steel (Boronized)	316 Stainless Steel (Boronized)	316 Stainless Steel (Boronized)
Bonnet	ASME SA216 WCC CS	ASME SA351 CF8M SS	ASME SA351 CF8M SS
Base Stud	ASME SA193 B7 Alloy Steel	ASME SA193 B8M Alloy Steel	ASME SA193 B8M Alloy Steel
Stud Nut	ASME SA194 2H Carbon Steel	ASME SA194 8M Carbon Steel	ASME SA194 8M Carbon Steel
Spring Washer, Drop Lever, Gag	Carbon Steel	Carbon Steel	Carbon Steel
Spring (-20° to 800°F)	Alloy Steel	Alloy Steel	316 Stainless Steel
Spring (801° to 1000°F)	Tungsten Steel or Inconel X-750	Tungsten Steel or Inconel X-750	316 Stainless Steel
Plain Cap	Malleable Iron	316 Stainless Steel	316 Stainless Steel
Cap Bolt	Carbon Steel	ASME SA193 B8M Alloy Steel	ASME SA193 B8M Alloy Steel
Lever, Top Lever	Malleable Iron	Malleable Iron	Malleable Iron
Lifting Fork	Malleable Iron	316 Stainless Steel	316 Stainless Steel
Lever Shaft	410/416 Stainless Steel	316 Stainless Steel	316 Stainless Steel
Packing	316 Stainless Steel[3]	316 Stainless Steel[3]	316 Stainless Steel[3]
Packing Nut	410/416 Stainless Steel	316 Stainless Steel	316 Stainless Steel
Guide Rings (1905-1910), Plunger Rings (Not Shown)	Teflon	Teflon	Teflon
Conventional (Standard) Valve Components (-00)			
Bonnet Gasket	Monel	Monel	Monel
Eductor Tube	316 Stainless Steel	316 Stainless Steel	316 Stainless Steel
Bonnet Plug	Carbon Steel	316 Stainless Steel	316 Stainless Steel
Bellows Valve Components (-30)			
Bonnet Gasket	Soft Iron	Monel	Monel
Limit Washer	410 Stainless Steel	316 Stainless Steel	316 Stainless Steel
Bellows	Inconel 625 LCF	Inconel 625 LCF	Inconel 625 LCF
Bellows Nut , Bellows Flange	316L Stainless Steel	316L Stainless Steel	316L Stainless Steel
Bellows Gasket	Monel	Monel	Monel
Bellows Bolts	ASME SA193 B7 Alloy Steel	ASME SA193 B8M Alloy Steel	ASME SA193 B8M Alloy Steel
Bellows Bolts Lock Washers	316 Stainless Steel	316 Stainless Steel	316 Stainless Steel
Overlift Restrictor	410 Stainless Steel	410 Stainless Steel	410 Stainless Steel

Notes:

1. The materials in red denote variation from standard material construction.
2. To specify valves, add material designation to the valve type, 1910L/S3 or 1910-30L/S3.
3. with Flexible Graphite Fillers (Spiral Wound).

Materials (Contd.)

Corrosive Service (Contd.)

Corrosive Service, Alloy 20 Material[1 & 2]

Component	Construction Variation			
	A1	A2	A3	A4
Common Components (-00 & -30)				
Base (1905-1918)	ASME SA216 WCC CS	ASME SA216 WCC CS	ASME SA351 CN7M AS	ASME SA351 CN7M AS
Base (1920-1928)	ASME SA217 WC6 AS	ASME SA217 WC6 AS	ASME SA351 CN7M AS	ASME SA351 CN7M AS
Base Plug (1905-1918)	Carbon Steel	Carbon Steel	Alloy 20[3]	Alloy 20
Base Plug (1920-1928)	316 Stainless Steel	316 Stainless Steel	Alloy 20	Alloy 20
Nozzle, Disc - Solid Metal Flat Seat	Alloy 20	Alloy 20	Alloy 20	Alloy 20
Adjusting Ring, Adjusting Ring Pin	316 Stainless Steel	Alloy 20	Alloy 20	Alloy 20
Adjusting Ring Pin Gasket	Soft Iron	Monel	Monel	Monel
Disc - Thermodisc, Disc Retainer	Inconel X-750	Inconel X-750	Inconel X-750	Inconel X-750
Disc Holder	316 Stainless Steel	Alloy 20	Alloy 20	Alloy 20
Guide Gasket	Soft Iron	Monel	Monel	Monel
Bonnet	ASME SA216 WCC CS	ASME SA216 WCC CS	ASME SA351 CN7M AS	ASME SA351 CN7M AS
Base Stud	ASME SA193 B7 AS	ASME SA193 B7 AS	Alloy 20	Alloy 20
Stud Nut	ASME SA194 2H CS	ASME SA194 2H CS	Alloy 20	Alloy 20
Spindle Retainer	Inconel X-750	Inconel X-750	Inconel X-750	Inconel X-750
Spring Washer	Carbon Steel	Carbon Steel	Carbon Steel	Alloy 20
Spring (-20° to 800°F)	Alloy Steel	Alloy Steel	Alloy Steel	Alloy 20
Spring (801° to 1000°F)	Tungsten Steel[4]	Tungsten Steel[4]	Tungsten Steel[4]	Alloy 20
Packed Cap	Carbon Steel	Carbon Steel	Alloy 20	Alloy 20
Plain Cap	Malleable Iron	Malleable Iron	Not Applicable	Not Applicable
Cap Bolt, Sealing Plug	Carbon Steel	Carbon Steel	Alloy 20	Alloy 20
Cap Set Screw	Carbon Steel	Carbon Steel	Not Applicable	Not Applicable
Cap Gasket	Soft Iron	Monel	Monel	Monel
Release Nut, Release Locknut	Carbon Steel	Carbon Steel	Carbon Steel	Carbon Steel
Lever, Lifting Fork	Malleable Iron	Malleable Iron	Malleable Iron	Malleable Iron
Lever Shaft	410/416 Stainless Steel	410/416 Stainless Steel	410/416 Stainless Steel	410/416 Stainless Steel
Packing	316 Stainless Steel[5]	316 Stainless Steel[5]	316 Stainless Steel[5]	316 Stainless Steel[5]
Packing Nut	410/416 Stainless Steel	410/416 Stainless Steel	410/416 Stainless Steel	410/416 Stainless Steel
Top Lever, Drop Lever	Malleable Iron	Malleable Iron	Not Applicable	Not Applicable
Gag	Carbon Steel	Carbon Steel	Carbon Steel	Carbon Steel
Sealing Plug Gasket	Soft Iron	Monel	Monel	Monel
Conventional (Standard) Valve Components (-00)				
Guide	316 Stainless Steel	Alloy 20	Alloy 20	Alloy 20
Bonnet Gasket	Soft Iron	Monel	Monel	Monel
Spindle	410 Stainless Steel	Alloy 20	Alloy 20	Alloy 20
Adjusting Screw, Adjusting Screw Nut	416 Stainless Steel	Alloy 20	Alloy 20	Alloy 20
Screwed Cap, Bolted Cap, Bonnet Plug	Carbon Steel	Carbon Steel	Alloy 20	Alloy 20
Eductor Tube	316 Stainless Steel	316 Stainless Steel	Alloy 20	Alloy 20
Limit Washer (D-2 & E-2)	316 Stainless Steel	Alloy 20	Alloy 20	Alloy 20
Bellows Valve Components (-30)				
Guide	316 Stainless Steel	316 Stainless Steel	Alloy 20	Alloy 20
Bonnet Gasket	Soft Iron	Soft Iron	Monel	Monel
Spindle	410 Stainless Steel	410 Stainless Steel	Alloy 20	Alloy 20
Adjusting Screw, Adjusting Screw Nut	416 Stainless Steel	416 Stainless Steel	Alloy 20	Alloy 20
Screwed Cap, Bolted Cap	Carbon Steel	Carbon Steel	Carbon Steel	Alloy 20
Limit Washer (D-2 & E-2)	316 Stainless Steel	Alloy 20	Alloy 20	Alloy 20
Bellows	Inconel 625 LCF	Alloy 20	Alloy 20	Alloy 20
Bellows Nut, Bellows Flange	316L Stainless Steel	Alloy 20	Alloy 20	Alloy 20
Bellows Gasket	Soft Iron	Monel	Monel	Monel

Notes:

1 The materials in red denote variation from standard material construction.
2 To specify valves, add material designation to the valve type, 1910L/A3 or 1910-30L/A3.
3 Alloy 20 - ASTM B473 UNS N08020.
4 or Inconel X-750.
5 with Flexible Graphite Fillers (Spiral Wound).

Materials (Contd.)

Corrosive Service (Contd.)

Corrosive Service, Monel Material[1&2]

Component	Construction Variation				
	M1	MB (M 1½)	M2	M3	M4
Common Components (-00 & -30)					
Base (1905-1918)	ASME SA216 WCC CS	ASME SA216 WCC CS	ASME SA216 WCC CS	ASME SA494 M35-1 NCA[3]	ASME SA494 M35-1 NCA[3]
Base (1920-1928)	ASME SA217 WC6 AS	ASME SA217 WC6 AS	ASME SA217 WC6 AS	ASME SA494 M35-1 NCA[3]	ASME SA494 M35-1 NCA[3]
Base Plug (1905-1918)	Carbon Steel	Carbon Steel	Carbon Steel	Monel	Monel
Base Plug (1920-1928)	316 Stainless Steel	316 Stainless Steel	316 Stainless Steel	Monel	Monel
Nozzle	Monel	Monel	Monel	Monel	Monel
Adjusting Ring, Adjusting Ring Pin	316 Stainless Steel	Monel	Monel	Monel	Monel
Adjusting Ring Pin Gasket	Soft Iron	Monel	Monel	Monel	Monel
Disc - Solid Metal Flat Seat	Monel	Monel	Monel	Monel	Monel
Disc - Thermodisc, Disc Retainer	Inconel X-750	Inconel X-750	Inconel X-750	Inconel X-750	Inconel X-750
Disc Holder	316 Stainless Steel	Monel	Monel	Monel	Monel
Guide	316 Stainless Steel	316 Stainless Steel	Monel	Monel	Monel
Guide Gasket	Soft Iron	Monel	Monel	Monel	Monel
Bonnet	ASME SA216 WCC CS	ASME SA216 WCC CS	ASME SA216 WCC CS	ASME SA494 M35-1 NCA[3]	ASME SA494 M35-1 NCA[3]
Base Stud	ASME SA193 B7 AS	ASME SA193 B7 AS	ASME SA193 B7 AS	Monel K500	Monel K500
Stud Nut	ASME SA194 2H CS	ASME SA194 2H CS	ASME SA194 2H CS	Monel K500	Monel K500
Spindle Retainer	Inconel X-750	Inconel X-750	Inconel X-750	Inconel X-750	Inconel X-750
Spring Washer	Carbon Steel	Carbon Steel	Carbon Steel	Carbon Steel	Monel
Spring (-450° to -21°F)	Not Applicable	Not Applicable	Not Applicable	316 Stainless Steel	Inconel X-750
Spring (-20° to 800°F)	Alloy Steel	Alloy Steel	Alloy Steel	Alloy Steel	Not Applicable
Spring (801° to 1000°F)	Tungsten Steel[4]	Tungsten Steel[4]	Tungsten Steel[4]	Not Applicable	Not Applicable
Adjusting Screw, Adjusting Screw Nut	416 Stainless Steel	416 Stainless Steel	Monel	Monel	Monel
Screwed Cap, Bolted Cap	Carbon Steel	Carbon Steel	Carbon Steel	Monel	Monel
Packed Cap, Sealing Plug	Carbon Steel	Carbon Steel	Carbon Steel	Monel	Monel
Plain Cap	Malleable Iron	Malleable Iron	Malleable Iron	Not Applicable	Not Applicable
Cap Bolt	Carbon Steel	Carbon Steel	Carbon Steel	Monel K500	Monel K500
Cap Set Screw	Carbon Steel	Carbon Steel	Carbon Steel	Not Applicable	Not Applicable
Cap Gasket	Soft Iron	Monel	Monel	Monel	Monel
Release Nut, Release Locknut	Carbon Steel	Carbon Steel	Carbon Steel	Monel	Monel
Lever, Lifting Fork	Malleable Iron	Malleable Iron	Malleable Iron	Malleable Iron[5]	Malleable Iron[5]
Lever Shaft, Packing Nut	410/416 Stainless Steel	410/416 Stainless Steel	410/416 Stainless Steel	410/416 Stainless Steel	410/416 Stainless Steel
Packing	316 Stainless Steel[6]	316 Stainless Steel[6]	316 Stainless Steel[6]	316 Stainless Steel[6]	316 Stainless Steel[6]
Top Lever, Drop Lever	Malleable Iron	Malleable Iron	Malleable Iron	Not Applicable	Not Applicable
Gag	Carbon Steel	Carbon Steel	Carbon Steel	Carbon Steel	Carbon Steel
Sealing Plug Gasket	Soft Iron	Monel	Monel	Monel	Monel
Limit Washer (D-2 & E-2)	316 Stainless Steel	Monel	Monel	Monel	Monel
Conventional (Standard) Valve Components (-00)					
Bonnet Gasket	Soft Iron	Monel	Monel	Monel	Monel
Spindle	410 Stainless Steel	410 Stainless Steel	Monel	Monel	Monel
Eductor Tube	316 Stainless Steel	316 Stainless Steel	316 Stainless Steel	Monel	Monel
Bonnet Plug	Carbon Steel	Carbon Steel	Carbon Steel	Monel	Monel
Bellows Valve Components (-30)					
Bonnet Gasket	Soft Iron	Soft Iron	Soft Iron	Monel	Monel
Spindle	410 Stainless Steel	410 Stainless Steel	410 Stainless Steel	Monel	Monel
Bellows	Inconel 625 LCF	Inconel 625 LCF	Monel	Monel	Monel
Bellows Nut, Bellows Flange	316L Stainless Steel	316L Stainless Steel	Monel	Monel	Monel
Bellows Gasket	Soft Iron	Monel	Monel	Monel	Monel

Notes:

1 The materials in red denote variation from standard material construction.
2 To specify valves, add material designation to the valve type, 1910L/M3 or 1910-30L/M3.
3 Nickel Copper Alloy (Per ASME Code Case 1750-22).
4 or Inconel X-750.
5 else Customer Specifiifed.
6 with Flexible Graphite Filler (Spiral Wound).

Materials (Contd.)

Corrosive Service (Contd.)

Corrosive Service, Hastelloy Material[1&2]

Component	Construction Variation			
	H1	H2	H3	H4
Common Components (-00 & -30)				
Base (1905-1918)	ASME SA216 WCC CS	ASME SA216 WCC CS	Nickel Alloy[3]	Nickel Alloy[3]
Base (1920-1928)	ASME SA217 WC6 AS	ASME SA217 WC6 AS	Nickel Alloy[3]	Nickel Alloy[3]
Base Plug (1905-1918), Cap Bolt	Carbon Steel	Carbon Steel	Hastelloy C	Hastelloy C
Base Plug (1920-1928)	316 Stainless Steel	316 Stainless Steel	Hastelloy C	Hastelloy C
Nozzle, Disc - Solid Metal Flat Seat	Hastelloy C	Hastelloy C	Hastelloy C	Hastelloy C
Adjusting Ring, Adjusting Ring Pin	316 Stainless Steel	Hastelloy C	Hastelloy C	Hastelloy C
Adjusting Ring Pin Gasket	Soft Iron	Monel	Monel	Monel
Disc - Thermodisc, Disc Retainer	Inconel X-750	Inconel X-750	Inconel X-750	Inconel X-750
Disc Holder	316 Stainless Steel	Hastelloy C	Hastelloy C	Hastelloy C
Guide Gasket	Soft Iron	Monel	Monel	Monel
Bonnet	ASME SA216 WCC CS	ASME SA216 WCC CS	Nickel Alloy[2]	Nickel Alloy[2]
Bonnet Gasket	Soft Iron	Monel	Monel	Monel
Base Stud	ASME SA193 B7 AS	ASME SA193 B7 AS	Hastelloy C	Hastelloy C
Stud Nut	ASME SA194 2H CS	ASME SA194 2H CS	Hastelloy C	Hastelloy C
Spindle Retainer	Inconel X-750	Inconel X-750	Inconel X-750	Inconel X-750
Spring Washer	Carbon Steel	Carbon Steel	Carbon Steel	Hastelloy C
Spring (-450° to -76°F)	316 Stainless Steel	Not Applicable	Not Applicable	Not Applicable
Spring (-75° to 800°F)	Alloy Steel	Alloy Steel	Alloy Steel	Hastelloy C
Spring (801° to 1000°F)	Tungsten Steel[4]	Tungsten Steel[4]	Tungsten Steel[4]	Hastelloy C
Screwed Cap, Bolted Cap,	Carbon Steel	Carbon Steel	Hastelloy C	Hastelloy C
Packed Cap, Sealing Plug	Carbon Steel	Carbon Steel	Hastelloy C	Hastelloy C
Plain Cap	Malleable Iron	Malleable Iron	Not Applicable	Not Applicable
Cap Set Screw	Carbon Steel	Carbon Steel	Not Applicable	Not Applicable
Cap Gasket	Soft Iron	Monel	Monel	Monel
Release Nut, Release Locknut, Gag	Carbon Steel	Carbon Steel	Carbon Steel	Carbon Steel
Lever	Malleable Iron	Malleable Iron	Malleable Iron[5]	Malleable Iron[5]
Lifting Fork, Top Lever, Drop Lever	Malleable Iron	Malleable Iron	Malleable Iron	Malleable Iron
Lever Shaft, Packing Nut	410/416 Stainless Steel	410/416 Stainless Steel	410/416 Stainless Steel	410/416 Stainless Steel
Packing	316 Stainless Steel[6]	316 Stainless Steel[6]	316 Stainless Steel[6]	316 Stainless Steel[6]
Sealing Plug Gasket	Soft Iron	Monel	Monel	Monel
Limit Washer (D-2 & E-2)	316 Stainless Steel	Hastelloy C	Hastelloy C	Hastelloy C
Standard Components (-00)				
Guide	316 Stainless Steel	Hastelloy C	Hastelloy C	Hastelloy C
Spindle	410 Stainless Steel	Hastelloy C	Hastelloy C	Hastelloy C
Adjusting Screw, Adjusting Screw Nut	416 Stainless Steel	Hastelloy C	Hastelloy C	Hastelloy C
Eductor Tube	316 Stainless Steel	316 Stainless Steel	Hastelloy C	Hastelloy C
Bonnet Plug	Carbon Steel	Carbon Steel	Hastelloy C	Hastelloy C
Bellows Components (-30)				
Guide	316 Stainless Steel	316 Stainless Steel	Hastelloy C	Hastelloy C
Spindle	410 Stainless Steel	410 Stainless Steel	Hastelloy C	Hastelloy C
Adjusting Screw, Adjusting Screw Nut	416 Stainless Steel	416 Stainless Steel	Hastelloy C	Hastelloy C
Bellows	Inconel 625 LCF	Hastelloy C	Hastelloy C	Hastelloy C
Bellows Nut, Bellows Flange	316L Stainless Steel	Hastelloy C	Hastelloy C	Hastelloy C
Bellows Gasket	Soft Iron	Monel	Monel	Monel

Notes:

1 The materials in red denote variation from standard material construction.
2 To specify valves, add material designation to the valve type, 1910L/H3 or 1910-30L/H3.
3 ASME SA494 CW12MW Nickel Alloy.
4 or Inconel X-750.
5 else Customer Specififed.
6 with Flexible Graphite Filler (Spiral Wound).

Materials (Contd.)

Corrosive Service (Contd.)

Duplex Material[1 & 2]

Component	Construction Variation	
	D1	D2
Common Components (-00 & -30)		
Base (1905-1918)	ASME SA216 WCC Carbon Steel	ASME SA216 WCC Carbon Steel
Base (1920-1928)	ASME SA217 WC6 Alloy Steel	ASME SA217 WC6 Alloy Steel
Base Plug (1905-1918)	Carbon Steel	Carbon Steel
Base Plug (1920-1928)	316 Stainless Steel	316 Stainless Steel
Nozzle	Duplex ASME SA479 UNS 31803[3]	Duplex ASME SA479 UNS 31803[3]
Adjusting Ring	316 Stainless Steel	Duplex ASME SA479 UNS 31803[3]
Adjusting Ring Pin	316 Stainless Steel	Duplex SA479 UNS S31803
Adjusting Ring Pin Gasket	Soft Iron	Monel
Disc - Solid Metal Flat Seat	Duplex ASME SA479 UNS 31803[3]	Duplex ASME SA479 UNS 31803[3]
Disc - Thermodisc	Inconel X-750	Inconel X-750
Disc Retainer, Spindle Retainer	Inconel X-750	Inconel X-750
Disc Holder	316 Stainless Steel	Duplex ASME SA479 UNS 31803[3]
Guide Gasket, Cap Gasket	Soft Iron	Monel
Bonnet	ASME SA216 WCC Carbon Steel	ASME SA216 WCC Carbon Steel
Base Stud	ASME SA193 B7 Alloy Steel	ASME SA193 B7 Alloy Steel
Stud Nut	ASME SA194 2H Carbon Steel	ASME SA194 2H Carbon Steel
Spring Washer	Carbon Steel	Carbon Steel
Spring (-20° to 800°F)	Alloy Steel	Alloy Steel
Spring (801° to 1000°F)	Tungsten Steel or Inconel X-750	Tungsten Steel or Inconel X-750
Screwed Cap, Bolted Cap, Packed Cap	Carbon Steel	Carbon Steel
Plain Cap	Malleable Iron	Malleable Iron
Cap Bolt	Carbon Steel	Carbon Steel
Cap Set Screw	Carbon Steel	Carbon Steel
Release Nut, Release Locknut, Gag	Carbon Steel	Carbon Steel
Lever	Malleable Iron	Malleable Iron
Lifting Fork	Malleable Iron	Malleable Iron
Lever Shaft, Packing Nut	410/416 Stainless Steel	410/416 Stainless Steel
Packing	316 Stainless Steel[4]	316 Stainless Steel[4]
Top Lever, Drop Lever	Malleable Iron	Malleable Iron
Sealing Plug	Carbon Steel	Carbon Steel
Sealing Plug Gasket	Soft Iron	Monel
Limit Washer (D-2 & E-2)	316 Stainless Steel	316 Stainless Steel
Conventional (Standard) Valve Material (-00)		
Guide	316 Stainless Steel	Duplex ASME SA479 UNS 31803[3]
Bonnet Gasket	Soft Iron	Monel
Spindle	410 Stainless Steel	Duplex SA479 UNS S31803
Adjusting Screw, Adjusting Screw Nut	416 Stainless Steel	Duplex SA479 UNS S31803
Eductor Tube	316 Stainless Steel	316 Stainless Steel
Bonnet Plug	Carbon Steel	Carbon Steel
Bellows Valve Material (-30)		
Guide	316 Stainless Steel	316 Stainless Steel
Bonnet Gasket	Soft Iron	Soft Iron
Spindle	410 Stainless Steel	410 Stainless Steel
Adjusting Screw, Adjusting Screw Nut	416 Stainless Steel	416 Stainless Steel
Bellows	Inconel 625 LCF	Inconel 625 LCF
Bellows Nut, Bellows Flange	316L Stainless Steel	316L Stainless Steel
Bellows Gasket	Soft Iron	Monel

Notes:

1 The materials in red denote variation from standard material construction.
2 To specify valves, add material designation to the valve type, 1910L/D2 or 1910-30L/D2.
3 or SA995 UNS J93345.
4 with Flexible Graphite Filler (Spiral Wound).

Materials (Contd.)

Corrosive Service (Contd.)

Duplex Material[1 & 2]

Component	Construction Variation	
	D3	D4
Common Components (-00 & -30)		
Base (1905-1918)	ASME SA995 CE8MN UNS J93345 Duplex SS	ASME SA995 CE8MN UNS J93345 Duplex SS
Base Plug (1905-1918)	Duplex ASME SA479 UNS 31803	Duplex ASME SA479 UNS 31803
Nozzle	Duplex ASME SA479 UNS 31803[3]	Duplex ASME SA479 UNS 31803[3]
Adjusting Ring	Duplex ASME SA479 UNS 31803[3]	Duplex ASME SA479 UNS 31803[3]
Adjusting Ring Pin	Duplex SA479 UNS S31803	Duplex SA479 UNS S31803
Adjusting Ring Pin Gasket	Monel	Monel
Disc - Solid Metal Flat Seat	Duplex ASME SA479 UNS 31803[3]	Duplex ASME SA479 UNS 31803[3]
Disc - Thermodisc	Inconel X-750	Inconel X-750
Disc Retainer, Spindle Retainer	Inconel X-750	Inconel X-750
Disc Holder	Duplex ASME SA479 UNS 31803[3]	Duplex ASME SA479 UNS 31803[3]
Guide Gasket, Cap Gasket	Monel	Monel
Bonnet	ASME SA995 CE8MN UNS J93345 Duplex	ASME SA995 CE8MN UNS J93345 Duplex
Base Stud	ASME SA193 B8M Alloy Steel	ASME SA193 B8M Alloy Steel
Stud Nut	ASME SA194 8M Carbon Steel	ASME SA194 8M Carbon Steel
Spring Washer	Carbon Steel	Duplex ASME SA479 UNS S31803
Spring (-20° to 800°F)	Alloy Steel	Inconel X-750
Spring (801° to 1000°F)	Tungsten Steel or Inconel X-750	Inconel X-750
Screwed Cap, Bolted Cap, Packed Cap	Duplex ASME SA479 UNS 31803[3]	Duplex ASME SA479 UNS 31803[3]
Plain Cap	Not Applicable	Not Applicable
Cap Bolt	ASTM A193 B8M Stainless Steel	ASTM A193 B8M Stainless Steel
Release Nut, Release Locknut, Gag	Carbon Steel	Carbon Steel
Lever	Malleable Iron else Customer Specified	Malleable Iron else Customer Specified
Lifting Fork	Malleable Iron	Malleable Iron
Lever Shaft, Packing Nut	410/416 Stainless Steel	410/416 Stainless Steel
Packing	316 Stainless Steel[4]	316 Stainless Steel[4]
Sealing Plug	Duplex ASME SA479 UNS S31803	Duplex ASME SA479 UNS S31803
Sealing Plug Gasket	Monel	Monel
Limit Washer (D-2 & E-2)	Duplex UNS S31803	Duplex UNS S31803
Conventional (Standard) Valve Material (-00)		
Guide	Duplex ASME SA479 UNS 31803[3]	Duplex ASME SA479 UNS 31803[3]
Bonnet Gasket	Monel	Monel
Spindle	Duplex SA479 UNS S31803	Duplex SA479 UNS S31803
Adjusting Screw, Adjusting Screw Nut	Duplex SA479 UNS S31803	Duplex SA479 UNS S31803
Eductor Tube	ASTM A789[5]	ASTM A789[5]
Bonnet Plug	Duplex ASME SA479 UNS S31803	Duplex ASME SA479 UNS S31803
Bellows Valve Material (-30)		
Guide	316 Stainless Steel	316 Stainless Steel
Bonnet Gasket	Monel	Monel
Spindle	410 Stainless Steel	410 Stainless Steel
Adjusting Screw, Adjusting Screw Nut	416 Stainless Steel	416 Stainless Steel
Bellows	Inconel 625	Inconel 625
Bellows Nut, Bellows Flange	Inconel 625	Inconel 625
Bellows Gasket	Monel	Monel

Notes:

1 The materials in red denote variation from standard material construction.
2 To specify valves, add material designation to the valve type, 1910L/D2 or 1910-30L/D2.
3 or SA995 UNS J93345
4 with Flexible Graphite Filler (Spiral Wound)
5 or ASME SA789 SAF 2507 Super Duplex UNS S32750

Materials (Contd.)

Low Temperature

Special Materials for Low Process Fluid Temperature[1&2]

Nomenclature	Construction Variation		
	L1[3]	L2	L3
	-21 to -75°F (-29 to -59°C)	-76 to -150°F (-60 to -101°C)	-151 to -450°F (-102 to -268°C)
Common Components (-00 & -30)			
Base (1905-1918)	ASME SA351 CF8M[4]	ASME SA351 CF8M[4]	ASME SA351 CF8M[4]
Base Plug (1905-1918), Nozzle	316 Stainless Steel	316 Stainless Steel	316 Stainless Steel
Adjusting Ring, Adjusting Ring Pin, Guide	316 Stainless Steel	316 Stainless Steel	316 Stainless Steel
Adjusting Ring Pin Gasket, Sealing Plug Gasket	Monel	Monel	Monel
Guide Gasket, Bonnet Gasket, Cap Gasket	Monel	Monel	Monel
Disc - Solid Metal Flat Seat, Disc Holder	316 Stainless Steel	316 Stainless Steel	316 Stainless Steel[6]
Disc - Thermodisc, Disc Retainer	Inconel X-750	Inconel X-750	Inconel X-750
Bonnet	ASME SA216 WCC CS	ASME SA351 CF8M	ASME SA351 CF8M
Base Stud	ASME SA193 B8M St.St.	ASME SA193 B8M St.St.	ASME SA193 B8M St.St.
Stud Nut	ASME SA194 8M St.St.	ASME SA194 8M St.St.	ASME SA194 8M St.St.
Spindle	410 Stainless Steel	316 Stainless Steel	316 Stainless Steel[6]
Spindle Retainer	Inconel X-750	Inconel X-750	Inconel X-750
Spring Washer	Carbon Steel	316 Stainless Steel	316 Stainless Steel[6]
Sealing Plug	Carbon Steel	316 Stainless Steel	316 Stainless Steel
Spring (-450° to -76°F)	Not Applicable	316 Stainless Steel	316 Stainless Steel
Spring (-75° to 800°F)	Alloy Steel	Not Applicable	Not Applicable
Adjusting Screw	416 Stainless Steel	316 Stainless Steel	316 Stainless Steel[6]
Adjusting Screw Nut	416 Stainless Steel	316 Stainless Steel	316 Stainless Steel
Screwed Cap, Bolted Cap, Packed Cap	Carbon Steel	316 Stainless Steel	316 Stainless Steel
Plain Cap, Lifting Fork	Malleable Iron	316 Stainless Steel	316 Stainless Steel
Cap Bolt	Carbon Steel	316 Stainless Steel	ASME SA193 B8M St.St.
Cap Set Screw, Release Nut, Release Locknut	Carbon Steel	316 Stainless Steel	316 Stainless Steel
Lever, Top Lever, Drop Lever	Malleable Iron	Malleable Iron	Malleable Iron
Lever Shaft, Packing Nut	410/416 Stainless Steel	410/416 Stainless Steel	410/416 Stainless Steel
Packing	316 Stainless Steel[5]	316 Stainless Steel[5]	316 Stainless Steel[5]
Gag	Carbon Steel	Carbon Steel	Carbon Steel
Limit Washer (D-2 & E-2)	316 Stainless Steel	316 Stainless Steel	316 Stainless Steel
Conventional (Standard) Components (-00)			
Eductor Tube	316 Stainless Steel	316 Stainless Steel	316 Stainless Steel
Bonnet Plug	Carbon Steel	316 Stainless Steel	316 Stainless Steel
Bellows Components (-30)			
Bellows	Inconel 625 LCF	Inconel 625 LCF	316L Stainless Steel
Bellows Nut , Bellows Flange	316L Stainless Steel	316L Stainless Steel	316L Stainless Steel
Bellows Gasket	Monel	Monel	Monel

Notes:

1 The materials in red denote variation from standard material construction.
2 To specify valves, add material designation to the valve type, 1910L/L2 or 1910-30L/L2.
3 Media temperature may impact valve temperature. Contact factory for assistance.
4 ASME SA352 LCC can be substituted for bases down to -50°F (-45.6°C) when requested.
5 with Flexible Graphite Filler (Spiral Wound).
6 With Titanium Nitride Coating.

Materials (Contd.)

Low Temperature (Contd.)

Special Materials for Low Ambient Temperatures[1, 2 & 3] (to -50°F or -45°C)

Component	Construction Variation	
	C1	C2[4]
Common Components (-00 & -30)		
Base (1905-1918)	ASME SA352 LCC Carbon Steel	ASME SA351 CF8M Stainless Steel
Base Plug (1905-1918), Nozzle	316 Stainless Steel	316 Stainless Steel
Adjusting Ring, Adjusting Ring Pin	316 Stainless Steel	316 Stainless Steel
Adjusting Ring Pin Gasket, Guide Gasket	Soft Iron	Soft Iron
Disc - Solid Metal Flat Seat	316 Stainless Steel	316 Stainless Steel
Disc - Thermodisc	616 Stainless Steel	616 Stainless Steel
Disc Retainer, Spindle Retainer	Inconel X-750	Inconel X-750
Disc Holder, Guide, Spring Washer	316 Stainless Steel	316 Stainless Steel
Bonnet Gasket, Cap Gasket, Sealing Plug Gasket	Soft Iron	Soft Iron
Bonnet	ASME SA352 LCC Carbon Steel	ASME SA351 CF8M Stainless Steel
Base Stud	ASME SA193 B8M Stainless Steel	ASME SA193 B8M Stainless Steel
Stud Nut	ASME SA194 8M Stainless Steel	ASME SA194 8M Stainless Steel
Spindle	410 Stainless Steel	410 Stainless Steel
Spring (-50° to 800°F)	Alloy Steel	Alloy Steel
Adjusting Screw, Adjusting Screw Nut	416 Stainless Steel	416 Stainless Steel
Screwed Cap, Bolted Cap, Packed Cap	LCC Carbon Steel	LCC Carbon Steel
Plain Cap, Lever, Lifting Fork, Top Lever, Drop Lever	Malleable Iron	Malleable Iron
Cap Bolt, Gag, Sealing Plug	Carbon Steel	Carbon Steel
Cap Set Screw, Limit Washer (D-2 & E-2)	316 Stainless Steel	316 Stainless Steel
Release Nut, Release Locknut	Carbon Steel	Carbon Steel
Lever Shaft, Packing Nut	410/416 Stainless Steel	410/416 Stainless Steel
Packing	316 Stainless Steel[5]	316 Stainless Steel[5]
Conventional (Standard) Valve Components (-00)		
Eductor Tube	316 Stainless Steel	316 Stainless Steel
Bonnet Plug	316 Stainless Steel	316 Stainless Steel
Bellows Valve Components (-30)		
Bellows	Inconel 625 LCF	Inconel 625 LCF
Bellows Nut, Bellows Flange	316L Stainless Steel	316L Stainless Steel
Bellows Gasket	Soft Iron	Soft Iron

Notes:

1 The materials in red denote variation from standard material construction.
2 Media temperature may impact valve temperature. Contact factory for assistance.
3 To specify valves, add material designation to the valve type, 1910L/C1 or 1910-30L/C1.
4 If impact testing is required, use the "C1" material variation.
5 with Flexible Graphite Filler (Spiral Wound).

Materials (Contd.)

High Temperature

Special Materials for Low Process Fluid Temperature[1 & 2]

Component	T1		T2[3 and 4]
	1001 to 1200°F (538°C to 649°C)		1201 to 1500°F (649 to 815°C)
	Standard Valve Material (-00)	Bellows Valve Material (-30)	Standard Valve Material (-00)
Base(1920-1928)	ASME SA351 CF8M St.St.	ASME SA351 CF8M St.St.	ASME SA351 CF8M St.St.[5]
Base Plug(1920-1928), Nozzle	316 Stainless Steel	316 Stainless Steel	316 Stainless Steel
Adjusting Ring, Adjusting Ring Pin	316 Stainless Steel	316 Stainless Steel	316 Stainless Steel
Adjusting Ring Pin Gasket, Guide Gasket	Monel	Monel	Monel
Disc - Solid Metal Flat Seat	316 Stainless Steel	316 Stainless Steel	Inconel X-750
Disc - Thermodisc, Disc Retainer	Inconel X-750	Inconel X-750	Inconel X-750
Disc Holder	316 Stainless Steel[6]	316 Stainless Steel[6]	316 Stainless Steel[6]
Guide	316 Stainless Steel	316 Stainless Steel	316 Stainless Steel[6]
Bonnet[7]	ASME SA351 CF8M St.St.	ASME SA351 CF8M St.St.	ASME SA351 CF8M St.St.
Bonnet Gasket, Sealing Plug Gasket	Monel	Monel	Not Applicable
Base Stud	ASME SA193 B8M Alloy Steel	ASME SA193 B8M Alloy Steel	ASME SA193 B8M Alloy Steel
Stud Nut	ASME SA194 8M Carbon Steel	ASME SA194 8M Carbon Steel	ASME SA194 8M Carbon Steel
Spindle	410 Stainless Steel	410 Stainless Steel	316 Stainless Steel (Stellited)
Spindle Retainer	Inconel X-750	Inconel X-750	Inconel X-750
Spring Washer	Carbon Steel	Carbon Steel	410 Stainless Steel
Spring	Tungsten Steel or Inconel X-750	Tungsten Steel or Inconel X-750	Tungsten Steel or Inconel X-750
Adjusting Screw	416 Stainless Steel	416 Stainless Steel	416 Stainless Steel
Adjusting Screw Nut	416 Stainless Steel	416 Stainless Steel	416 Stainless Steel
Screwed Cap, Bolted Cap, Packed Cap	Carbon Steel	Carbon Steel	Carbon Steel
Plain Cap, Cap Bolt, Gag, Sealing Plug	Carbon Steel	Carbon Steel	Carbon Steel
Cap Set Screw	Carbon Steel	Carbon Steel	Malleable Iron
Cap Gasket	Monel	Monel	Not Applicable
Release Nut, Release Locknut	Carbon Steel	Carbon Steel	Carbon Steel
Lever, Lifting Fork, Top Lever, Drop Lever	Malleable Iron	Malleable Iron	Malleable Iron
Lever Shaft, Packing Nut	410/416 Stainless Steel	410/416 Stainless Steel	410/416 Stainless Steel
Packing	316 Stainless Steel[8]	316 Stainless Steel[8]	316 Stainless Steel[8]
Eductor Tube, Bonnet Plug	316 Stainless Steel	Not Applicable	Not Applicable
Limit Washer (D-2 & E-2)	316 Stainless Steel	316 Stainless Steel	316 Stainless Steel
Bellows	Not Applicable	Inconel 625 LCF	Inconel 625 LCF
Bellows Nut, Bellows Flange	Not Applicable	Inconel 625	Inconel 625
Bellows Gasket	Not Applicable	Monel	Monel
Deflector Plate (Not Shown)	Not Applicable	Not Applicable	316 Stainless Steel

Notes:

1. The materials in red denote variation from standard material construction.
2. To specify valves, add material designation to the valve type, 1920L/T2 or 1920-30L/T2.
3. All T2 valves have ANSI Class 300 outlet flanges.
4. Consult factory for temperatures above 1500°F (815°C).
5. Carbon content must be 0.04% or higher.
6. Glide-Aloy Coated.
7. Slotted Yoke Bonnet for T2. Slotted Bonnet not available for liquid service.
8. with Flexible Graphite Filler (Spiral Wound).

Materials (Contd.)

1900 Valves for Lethal Service

In some industries served by Consolidated, there are lethal service applications. These applications require special consideration as detailed below. Should you feel that your application may be for lethal service, please review this information. "Lethal Service" should be prominently indicated in your discussions, inquiries, or purchase orders.

I. Definition

ASME B & PVC, Section VIII (Division 1) states that it is the responsibility of the user to state that the valve will be in lethal service.

IMPORTANT:

Consolidated does not determine if a fluid is lethal. The customer must specify the fluid is lethal and his paperwork should be clearly stamped, identifying the application as a lethal fluid.

The ASME Code definition is as follows:

Lethal Substance - Poisonous gases or liquids of such a nature that a very small amount of the gas or the vapor of the liquid, mixed or unmixed with air, is dangerous to life when inhaled.

ASME B31.3, a chemical plant and petroleum refining piping standard, supplies a similar definition, which they call a "Category M Fluid Service".

II. Valve Requirements for Lethal Service Application

A. Only closed bonnet valves with a screwed or bolted cap or packed lever can be used for lethal service.

B. Valve model numbers that are acceptable for lethal service after modification are 1905/1910 conventional and bellows flanged valves.

C. It is recommended that a soft seat design be used for improved tightness.

D. When service temperature exceeds 450°F (232°C), bolting material review is required by Dresser Measurement Engineering.

E. Use non-sparking material for flammable media. Examples are Bronze, 316 Stainless Steel, and Monel.

III. Base, Bonnet, and Cap Casting Requirements

A. Each casting requires 100% visual inspection

B. Each casting requires complete surface examination either by magnetic particle for steel castings or liquid penetrant for stainless castings.

C. Each casting shall have radiographic examination.

D. All repairs to base, bonnet, and cap castings must be documented.

E. All threads must be inspected for continuity of threads

F. Hydrotest hold time for ten (10) minutes.

G. The base drain plug is to be sealed by seal welding a plug of the same material as the base.

H. The bonnet vent is to be sealed in accordance with paragraph G for conventional valves (non-bellows). Bellows valves are to have the vent connection vented to a safe location.

IV. Additional Requirements

A. Each bellows requires a mass spectrometer leak test to 1 x 10-7 cc/sec to be imposed.

B. It is necessary to seal the nozzle-base joint. The customer must state their preference between a seal weld or O-Ring joint, depending on conformance of their maintenance practice.

C. The nozzle and disc require hydrotesting with a hold time for a minimum of ten (10) minutes.

D. Cleaning procedures and lubricants used shall be acceptable for lethal service.

E. Back pressure testing is required. Documentation of test is required.

Materials (Contd.)

O-Ring Selection

O-Ring Selection Table - Durometer

Valve Type	Set Pressure Range																			
	50[1]				70 - 75[1]				90[2]				Teflon[3] (-300°F to 200°F) (-184.4 to 93.3°C)				Teflon[3](201°F to 500°F) (93.9 to 260°C)			
	psig		barg		psig		barg		psig		barg		psig		barg		psig		barg	
	min.	max.	min.	max.	min.	max.	min.	max.	min.	max.	min.	max.	min.	max.	min.	max.	min.	max.	min.	max.
1900D & E	5	75	0.34	5.17	76	800	5.24	55.16	801	2000	55.23	137.90	2000	6000	137.90	413.69	285	6000	19.65	413.69
1900F	5	75	0.34	5.17	76	800	5.24	55.16	801	2000	55.23	137.90	2000	6000	137.90	413.69	285	6000	19.65	413.69
1900G	5	75	0.34	5.17	76	780	5.24	53.78	781	1900	53.85	131.00	1900	3705	131.00	255.45	285	3705	19.65	255.45
1900H	5	75	0.34	5.17	76	780	5.24	53.78	781	1900	53.85	131.00	1900	2750	131.00	189.61	285	2750	19.65	189.61
1900J	5	75	0.34	5.17	76	780	5.24	53.78	781	1900	53.85	131.00	1900	2700	131.00	186.16	285	2700	19.65	186.16
1900K	5	75	0.34	5.17	76	580	5.24	39.99	581	1400	40.06	96.53	1400	2220	96.53	153.06	250	2220	17.24	153.06
1900L	5	75	0.34	5.17	76	580	5.24	39.99	581	1400	40.06	96.53	1400	1500	96.53	103.42	155	1500	10.69	103.42
1900M	5	75	0.34	5.17	76	580	5.24	39.99	581	1100	40.06	75.84	–	–	–	–	140	1100	9.65	75.84
1900N	5	75	0.34	5.17	76	580	5.24	39.99	581	1000	40.06	68.95	–	–	–	–	90	1000	6.21	68.95
1900P	5	70	0.34	4.83	71	500	4.90	34.47	501	1000	34.54	68.95	–	–	–	–	75	1000	5.17	68.95
1900Q	5	70	0.34	4.83	71	420	4.90	28.96	421	600	29.03	41.37	–	–	–	–	80	600	5.52	41.37
1900R	5	50	0.34	3.45	51	420	3.52	28.96	421	600	29.03	41.37	–	–	–	–	60	300	4.14	20.68
1900T	5	50	0.34	3.45	51	200	3.52	13.79	201	300	13.86	20.68	–	–	–	–	30	300	2.07	20.68
1900U	5	50	0.34	3.45	51	200	3.52	13.79	201	300	13.86	20.68	–	–	–	–	30	300	2.07	20.68
1900V	–	–	–	–	15	150	1.03	10.34	151	300	10.41	20.68	–	–	–	–	15	300	1.03	20.68
1900W	–	–	–	–	7	150	0.48	10.34	151	300	10.41	20.68	–	–	–	–	15	300	1.03	20.68

Notes:

1 Maximum set pressure for silicone compounds is half of the maximum value.

2 The E962-90D 0-Ring can be used in steam service in applications down to 15 psig (1.03 barg).

3 Teflon will not be supplied for conditions that deviate from these ranges.

Materials (Contd.)

O-Ring Selection (Contd.)

O-Ring Temperature Limits

Materials	Durometer	Description[1]	Temp. Limits (°F)	Temp. Limits (°C)
Nitrile	50	N299-50 or N1009-50	-45 to +225	-43 to +107
	70	N674-70	-40 to +250	-40 to +121
	90	N552-90	-40 to +250	-40 to +121
	70[2]	N1173-70	-25 to +300	-31 to +149
Ethylene/Propylene	50	E1100-50 or E981-50	-65 to +212	-53 to +100
	70	E603-70	-65 to +212	-53 to +100
	75 & 80[3]	E740-75 & E515-80	-70 to +250	-57 to +121
	90	E962-90[4]	-70 to +500	-57 to +260
	75[5]	E962-75	-60 to +250/400	-51 to +121/204
Fluorocarbon	50	V986-50	-15 to +400	-26 to +204
	75	V747-75 or V884-75	-15 to +400	-26 to +204
	90	V894-90 or V709-90	-15 to +400	-26 to +204
Neoprene	50	C267-50	-45 to +300	-43 to +149
	70	C944-70 or C873-70	-45 to +300	-43 to +149
Silicone	50	S595-50	-65 to +437	-53 to +225
	70	S604-70	-65 to +437	-53 to +225
Teflon	N/A	Teflon	-300 to +505	-184 to +263
Kalrez[6]	82	1050LF	-42 to +550	-41 to +288
	75	4079	-58 to +601	-50 to +316
	91	3018	-35 to +601	-37 to +316
	65	1058	-40 to +500	-40 to +260

Notes:

1. Contact factory for O-Ring selection for various fluids.
2. Consult factory before using. For use with freon 134A/ester oil service.
3. Set pressure ranges from durometer table for 70-75 Durometer shall apply to these compounds (for nuclear service, radiation environment).
4. EPR962-90D can be used on steam service to lower pressure limit of 15 psig (1.03 barg).
5. Can be used upto 400°F (204°C) for Steam Applications.
6. Consult factory before selecting.

Accessories

1900 Caps, Levers, and Accessories

Lifting Mechanisms

The purpose of the lifting mechanism is to open the valve when the pressure under the valve disc is lower than the set pressure. These mechanisms are made in three basic types: plain lever, packed lever, and air-operated lifting device. The lifting lever may be used as follows:

(1) to lift the disc from the valve seat periodically during the operation of equipment to be sure that the disc holder is not frozen in the guide as a result of corrosion, coking, sulphur deposits, etc. This will ensure protection of the unit at all times. Operating pressure under the disc should be approximately 75% of the set pressure when lifting in accordance with the ASME Code; otherwise the lever assembly could be damaged.

(2) to remove foreign particles which are sometimes trapped under the seat as the valve closes. Immediate cleaning of the valve seat with the pressure of the media, by use of the lifting lever, will correct an otherwise leaking valve, save maintenance costs at a later date and in some cases will avoid a shutdown of the equipment.

(3) to vent equipment to the atmosphere or discharge piping.

Plain Lever

This lever assembly is not pressure-tight and should not be used where back pressure is present or where the escape of vapor discharging from an open valve is undesirable around the lever assembly.

Packed Lever

As indicated by the name, this lifting lever assembly is packed around the lever shaft, so that leakage will not occur around the upper part of the valve when the valve is open or when back pressure is present. The packed lifting lever should be used when positive protection against leakage is required.

Bolted Cap

Consolidated Standard Safety Relief Valves are supplied with screwed caps but bolted caps are available.

Gag

The purpose of the gag is to hold the safety relief valve closed while equipment is being subjected to an operational hydrostatic test. This is the only purpose for which the gag is intended, and it can be accomplished by pulling the gag hand-tight. Force should never be used. The gag should never be left in the valve during the operation of the equipment. It should be removed each time after using and hung in a safe, convenient location and the sealing plug reinstated and properly torqued.

ASME B & PVC, Section VIII, Lever

ASME Codes require that a lifting lever must be supplied with the valve for steam, air, and hot water service over 140°F (60°C) applications. However, it need not be a sealed lifting mechanism. The ASME Codes do recommend that sealed lifting mechanisms be used; however, they are not mandatory. The lifting lever may be omitted under Code Case 2203. However, Dresser requires that all orders for pressure relief valves without levers or blowdown valves for steam, air, and water over 140°F (60°C) state specifically that the valves are being purchased per Code Case 2203. The purchaser is responsible for obtaining jurisdictional authorization for use of Code Case 2203.

Thermal Relief Valves: When ASME Code stamped valves are used for thermal relief applications, the ASME Code guidelines shall be followed in regard to lifting levers.

Accessories (Contd.)

1900 Caps, Levers, and Accessories (Contd.)

Air-Operated Lifting Device

The Air Operated Lifting Device uses an air cylinder to obtain lifting power to open the valve from a remote control station. Normal operation of the safety relief valve is independent of the lifting device.

Please specify actual required conditions, otherwise the device will be supplied to operate with at least 75% of set pressure under the disc in accordance with the ASME Code.

Requirements for special application: valve size, set pressure, minimum pressure at which the valve must be kept open, air pressure for operator, or electrical characteristics for solenoid operation.

Regulated air, not to exceed 100 psig, is required for operation.

Air-Operated Lifting Device

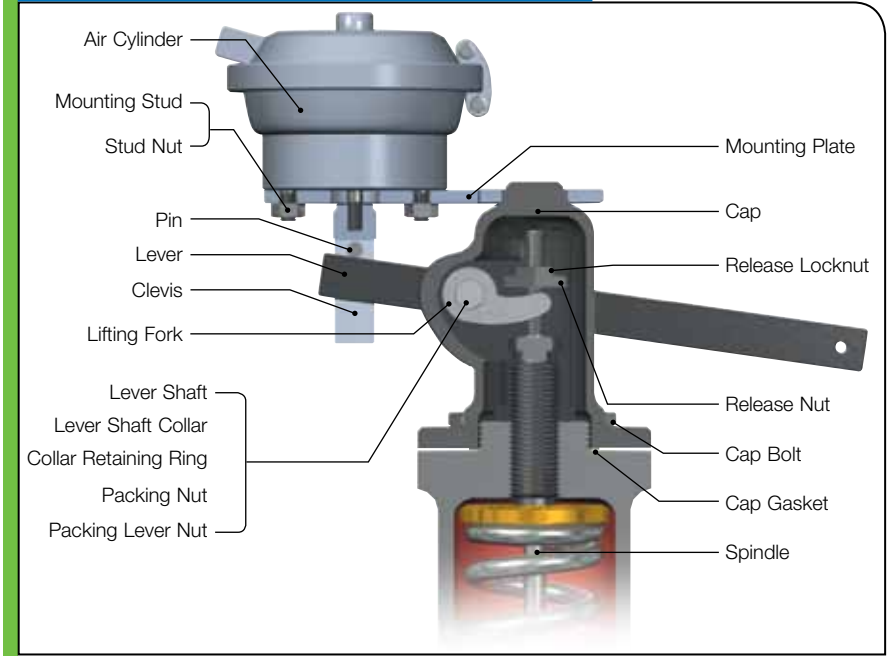

Valve Position Indicators

Valve Position Indicators in general, are a micro switch apparatus used for remote indication of the opening of a Safety Relief Valve. It is designed to activate warning devices such as control panel lights or auditory indicators. This option enhances control function of operators located in remote control stations. Please advise voltage requirements for proper selection of micro switch when ordering.



Slotted Bonnet



Steam Jacket



Vent Bug Screen
(Available in 1900-30 bellows valve only)



Forged Body
(Severe Service, Special Materials, Special Dimensions)

Accessories (Contd.)

Packed Lever

As indicated by the name, this lifting lever assembly is packed around the lever shaft, so that leakage will not occur around the upper part of the valve when the valve is open or when back pressure is present. The packed lifting lever should be used when positive protection against leakage is required.

Packed Lever

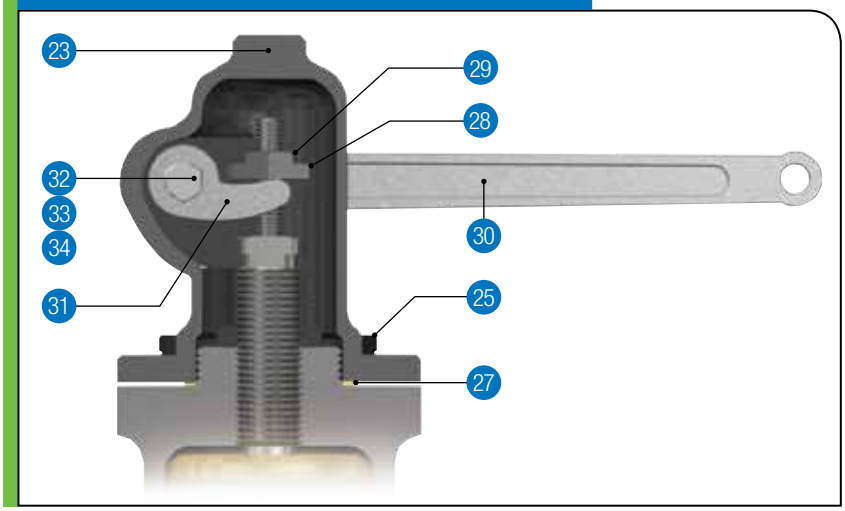

Plain Lever

This lever assembly is not pressure-tight and should not be used where back pressure is present or where the escape of vapor discharging from an open valve is undesirable around the lever assembly. It is designed with either a one or two-piece lever as illustrated below. The design is based on valve size and/or valve set pressure.

One-Piece Lever Design

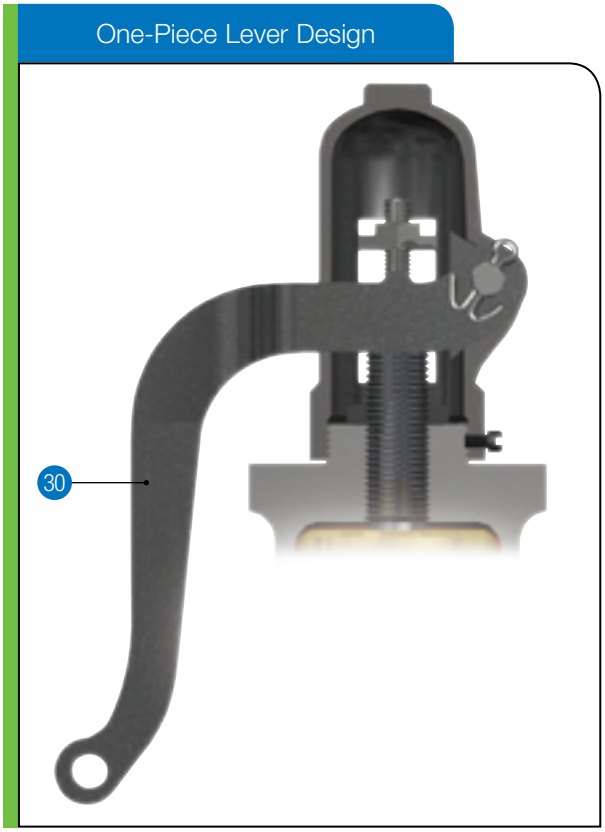

Two-Piece Lever Design

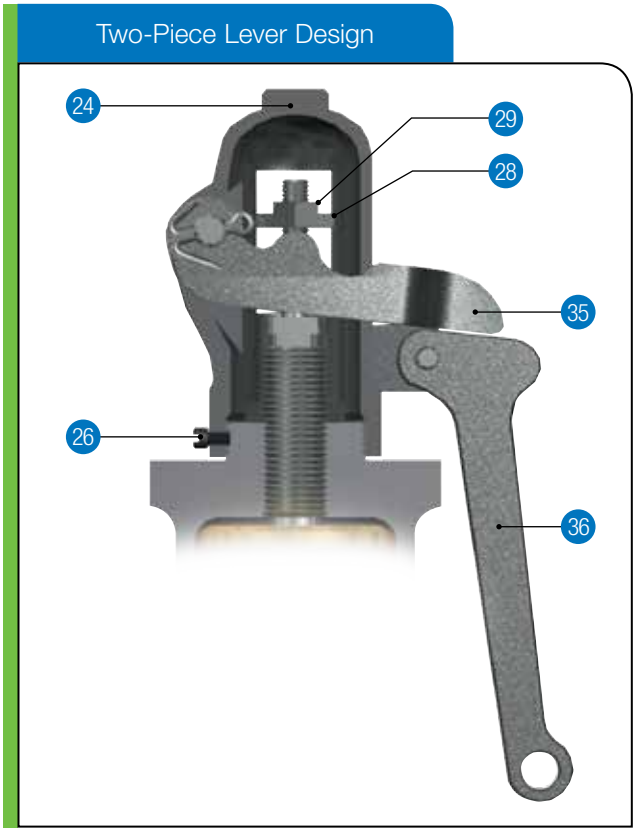

Accessories (Contd.)

Bolted Cap

Consolidated standard safety relief valves are supplied with screwed caps, but bolted caps are available.

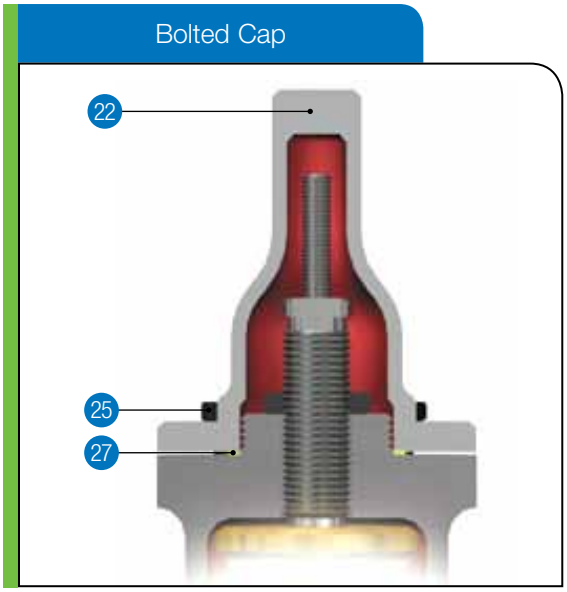

Cap with Gag

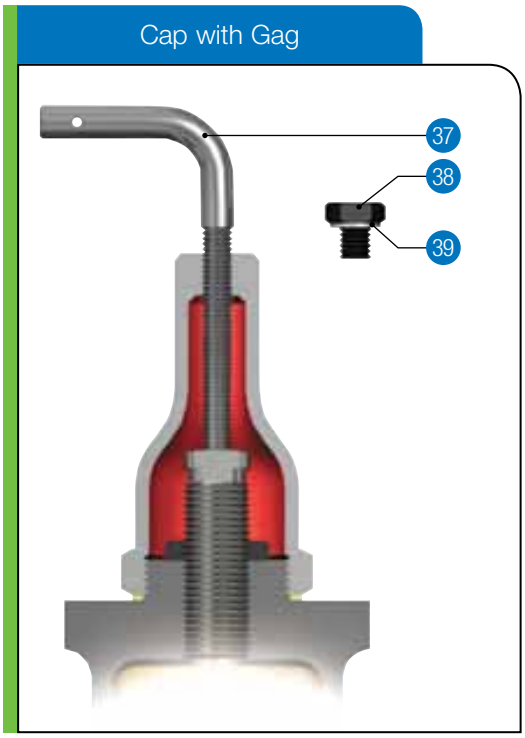

The purpose of the gag is to hold the safety relief valve closed while equipment is being subjected to an operational hydrostatic test. This is the only purpose for which the gag is intended, and it can be accomplished by pulling the gag hand-tight. Force should never be used. The gag should never be left in the valve during the operation of the equipment. It should be removed each time after using and hung in a safe, convenient location.

Accessories (Contd.)

Cap and Lever Construction

Standard, Alloy, Monel, Hastelloy and Duplex Material[1]

Cap Type		Component	Construction Variation			
			Std., A1, A2, H1, H2, L1, M1, MB, M2, D1, D2, S2, T1, T2	Alloy 20 A3 and A4	Hastelloy H3 and H4	HF Alky HA
Packed Lever	23	Cap	Carbon Steel	Alloy 20	Hastelloy C	Carbon Steel
	25	Cap Bolts	Carbon Steel	Alloy 20	Hastelloy C	Carbon Steel
	27	Cap Gasket	Soft Iron[3]	Monel	Monel	Monel
	30	Packed Lever	Malleable Iron	Malleable Iron	Malleable Iron	Malleable Iron
	32	Lever Shaft	410/416 Stainless Steel	410/416 Stainless Steel	410/416 Stainless Steel	410/416 Stainless Steel
	33	Packing	316 Stainless Steel[2]	316 Stainless Steel[2]	316 Stainless Steel[2]	316 Stainless Steel[4]
	34	Packing Nut	410/416 SS	410/416 SS	410/416 SS	410/416 SS
	31	Lifting Fork	Malleable Iron	Malleable Iron	Malleable Iron	Malleable Iron
	28	Release Nut	Carbon Steel	Carbon Steel	Carbon Steel	Carbon Steel
	29	Release Lock Nut	Carbon Steel	Carbon Steel	Carbon Steel	Carbon Steel
Plain Lever	24	Cap	Malleable Iron	N/A	N/A	Malleable Iron
	26	Cap Set Screw	Carbon Steel	N/A	N/A	Carbon Steel
	35	Top Lever	Malleable Iron	N/A	N/A	Malleable Iron
	36	Drop Lever	Malleable Iron	N/A	N/A	Malleable Iron
	28	Release Nut	Carbon Steel	N/A	N/A	Carbon Steel
	29	Release Lock Nut	Carbon Steel	N/A	N/A	Carbon Steel
	30	Plain Lever (One Piece)	Malleable Iron	N/A	N/A	Malleable Iron
Bolted Cap	22	Cap	Carbon Steel	Alloy 20	Hastelloy C	Carbon Steel
	25	Cap Bolts	Carbon Steel	Alloy 20	Hastelloy C	Carbon Steel
	27	Cap Gasket	Soft Iron[3]	Monel	Monel	Monel
Gag	37	Gag Bolt	Carbon Steel	Carbon Steel	Carbon Steel	Carbon Steel
	38	Sealing Plug	Carbon Steel	Alloy 20	Hastelloy C	Carbon Steel
	39	Plug Gasket[3]	Soft Iron	Monel	Monel	Monel

Notes:

1. The materials in red denote variation from standard material construction.
2. with Flexible Graphite Filler (Spiral Wound).
3. Gasket material is Monel for A2, H2, MB, M2, D2 and S2 construction.
4. or Graphlock

Accessories (Contd.)

Cap and Lever Construction (Contd.)

Monel, Stainless, and Low Temperature Material[1]

Cap Type	Component		Construction Variation			
			Monel	Duplex	Stainless Steel	Low Temperature
			M3 and M4	D3 and D4	S3 and S4	L2 and L3
Packed Lever	23	Cap	Monel	Duplex ASME SA479[3]	316 Stainless Steel	316 Stainless Steel
	25	Cap Bolts	Monel K500	ASTM A193 B8M Stainless Steel	ASME SA193 B8M SS	ASME SA193 B8M SS
	27	Cap Gasket	Monel	Monel	Monel	Monel
	30	Packed Lever	Malleable Iron	Malleable Iron	Malleable Iron	Malleable Iron
	32	Lever Shaft	410/416 St.St.	410/416 Stainless Steel	316 Stainless Steel	410/416 St.St.
	33	Packing	316 Stainless Steel[2]	316 Stainless Steel[2]	316 Stainless Steel[2]	316 Stainless Steel[2]
	34	Packing Nut	410/416 St.St.	410/416 Stainless Steel	316 Stainless Steel	410/416 St.St.
	31	Lifting Fork	Malleable Iron	Malleable Iron	316 Stainless Steel	316 Stainless Steel
	28	Release Nut	Carbon Steel	Carbon Steel	316 Stainless Steel	316 Stainless Steel
	29	Release Lock Nut	Carbon Steel	Carbon Steel	316 Stainless Steel	316 Stainless Steel
Plain Lever	24	Cap	N/A	N/A	316 Stainless Steel	316 Stainless Steel
	26	Cap Set Screw	N/A	N/A	B8M Stainless Steel	316 Stainless Steel
	35	Top Lever	N/A	N/A	Malleable Iron	Malleable Iron
	36	Drop Lever	N/A	N/A	Malleable Iron	Malleable Iron
	28	Release Nut	N/A	N/A	Carbon Steel	Carbon Steel
	29	Release Lock Nut	N/A	N/A	Carbon Steel	Carbon Steel
	30	Plain Lever (One Piece)	N/A	N/A	Malleable Iron	Malleable Iron
Bolted Cap	22	Cap	Monel	Duplex ASME SA479[3]	316 Stainless Steel	316 Stainless Steel
	25	Cap Bolts	Monel K500	ASTM A193 B8M Stainless Steel	ASME SA193 B8M SS	ASME SA193 B8M SS
	27	Cap Gasket	Monel	Monel	Monel	Monel
Gag	37	Gag Bolt	Carbon Steel	Carbon Steel	Carbon Steel	Carbon Steel
	38	Sealing Plug	Monel	Duplex ASME SA479 UNS S31803	316 Stainless Steel	316 Stainless Steel
	39	Plug Gasket	Monel	Monel	Monel	Monel

Notes:

1 The materials in red denote variation from standard material construction.

2 with Flexible Graphite Filler (Spiral Wound).

3 Duplex ASME SA479 UNS 31803 or SA995 UNS J93345

Accessories (Contd.)

Bolt-on Jackets

Jacketing of Relief Valves:

Consolidated valve offers simple solutions to your heating problems: **Bolt-on Jackets**.

Viscous materials that freeze or harden in relief valve nozzles create hazardous conditions. Process pipe jacketing or tracing may not provide sufficient heat to the area in and around the relief valve seat. During a pressure surge, some of the solid materials may stick in and around the seating area, keeping the valve from functioning and re-seating properly. This would result in leakage around the valve seating surface.

The solution to this problem is the Bolt-on Jacket. This jacket is a two piece aluminum casting with a steel pressure chamber embedded in the aluminum jacket casting. The pressure chamber is fabricated of standard pressure vessel materials for various heating fluids and service temperatures. The chamber is designed and tested in accordance with the ASME B & PVC, Section VIII, Div. I. The jacket casting conducts heat from the pressure chamber and rapidly distributes it evenly over the outer surface of the relief valve.

The aluminum casting distributes heat only. It carries no pressure load at any time. Heating fluid is transferred from one half of the jacket to the other by an external connector. A thin layer of heat transfer cement is used between the jacket and the relief valve to promote effective heat transfer by filling any air gaps between the jacket and the relief valve.

Bolt-on Jacket halves bolt together for quick installation and unbolt for ready access to the relief valve for easy maintenance. The jackets cover the jacket fully from flange to flange providing uniform heat to all process wetted surfaces. Standard service ratings for the jacket are 150 psig and 500°F. Higher ratings are available upon request.

Bolt-on Jackets may be ordered with adjacent flange coverage and with a variety of heating medium connections. Canadian Registration is available for all provinces.

Bolt-on Jackets are operating successfully on relief valves in many different process service applications world wide. Customers should consider jacketing the relief valves whenever the adjacent vessel or piping is heated in some manner. The following lists process applications that typically require jacketing of the relief valve:

- Acrylic Acid
- Ammonium Nitrate
- Coal Tars
- Caprolactam
- Cyanuric Chloride
- DMT
- DNT
- Fluoropolymers
- LLDPE
- Olefins
- Phosphorous
- Polypropylene
- Polystyrene Resins
- Phthalic Anhydride
- Sulphuric Acid
- Sulphur Dioxide
- Some Surfactants
- Tall Oils
- TMA

Typical Bolt-on Jacket



To ensure we provide the proper jacket coverage; please answer the following questions:

(1) Is the process operating at elevated temperatures?
(2) What is the process?
(3) What is the temperature of the process being maintained?
(4) What heating medium is being used in your jacket? What pressure and temperature is this medium?
(5) What type of jacket connections are required?
(6) How is the temperature being maintained on the process piping and other equipment (valves, pumps, meters, etc.)?

The relief valve will probably need a Bolt-on Jacket if it is operating in one of the process services listed above or if the adjacent piping and equipment is heated.

Contact the Factory for assistance.

Dimensions & Weights

1900 Flanged Series

1900 Conventional Valve

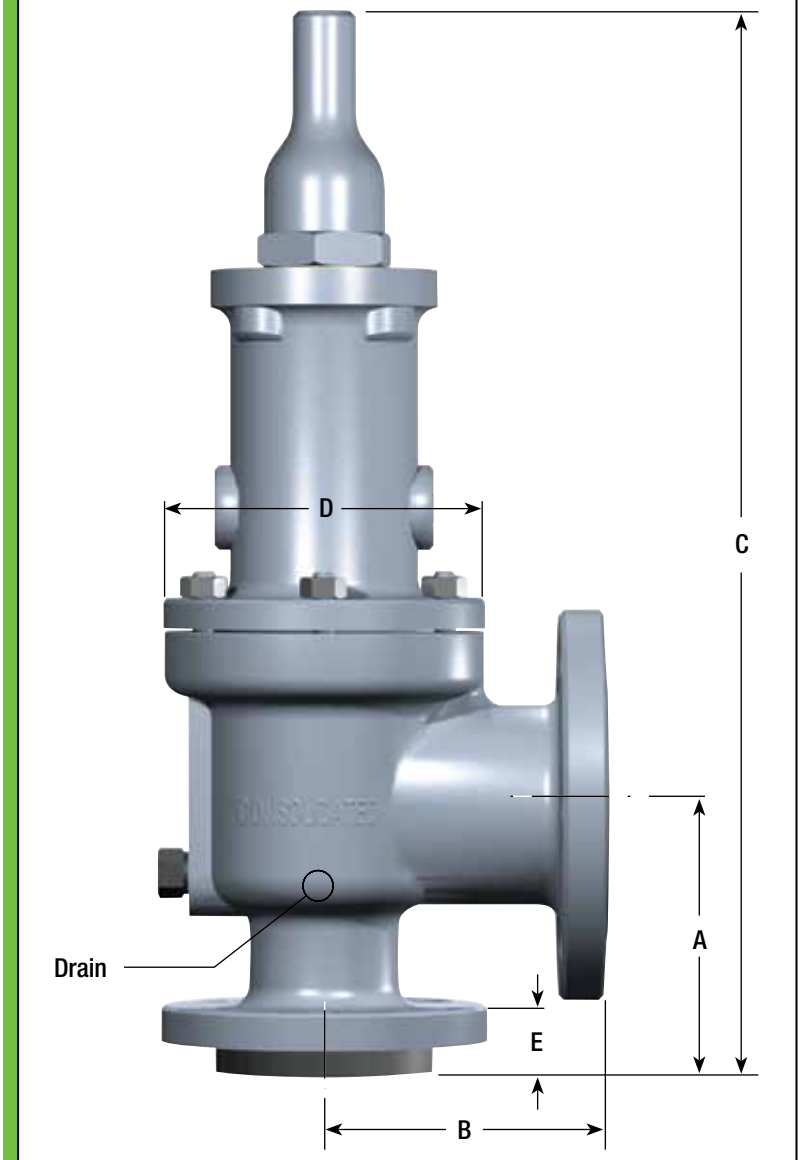

This table applies to the standard 1900 Series regardless of materials of construction.

The table provides overall dimensions for standard valve size and pressure class offerings as shown on pages 1900.5-1900.9.

If the valve you are reviewing has an inlet or outlet size different from standard valve offerings, the dimensions “A” through “E” and weight may not apply. Consult factory for non-standard valve dimensions.

Note:

Inlet and outlet combinations as well as orifices sizes shown in the following tables are compliant with API Standard 526, Sixth Edition, 2009. For replacement valves that do not comply with this edition, contact the factory for verification of dimensions and inlet and outlet combinations. The U, V & W orifice valves are not an API approved orifice size.

Dimensions & Weights (Contd.)

Valve Data - D Orifice

Valve Type	A		B		C				D		E		Approximate Weight	
					Standard		Bellows							
	in.	mm	in.	mm	in.	mm	in.	mm	in.	mm	in.	mm	lb.	kg
1905	4.13	104.9	4.50	114.3	17.00	431.8	18.00	457.2	5.44	138.2	1.13	28.7	40	18.1
1906	4.13	104.9	4.50	114.3	17.00	431.8	18.00	457.2	5.44	138.2	1.38	35.1	40	18.1
1910	4.13	104.9	4.50	114.3	17.50	444.5	18.50	469.9	5.44	138.2	1.38	35.1	50	22.7
1912	4.13	104.9	4.50	114.3	18.25	463.6	19.25	489.0	6.31	160.3	1.38	35.1	55	24.9
1914	4.13	104.9	5.50	139.7	21.75	552.5	22.75	577.9	7.81	198.4	1.94	49.3	95	43.1
1916	4.13	104.9	5.50	139.7	21.75	552.5	22.75	577.9	7.81	198.4	1.94	49.3	95	43.1
1918	5.50	139.7	7.00	177.8	26.50	673.1	27.50	698.5	8.88	225.6	2.44	62.0	150	68.0
1920	4.13	104.9	4.50	114.3	17.50	444.5	18.50	469.9	5.44	138.2	1.38	35.1	50	22.7
1922	4.13	104.9	4.50	114.3	17.50	444.5	18.50	469.9	5.44	138.2	1.38	35.1	50	22.7
1924	4.13	104.9	5.50	139.7	21.75	552.5	22.75	577.9	7.81	198.4	1.94	49.3	95	43.1
1926	4.13	104.9	5.50	139.7	21.75	552.5	22.75	577.9	7.81	198.4	1.94	49.3	95	43.1
1928	5.50	139.7	7.00	177.8	26.50	673.1	27.50	698.5	8.88	225.6	2.44	62.0	150	68.0

Valve Data - E Orifice

Valve Type	A		B		C				D		E		Approximate Weight	
					Standard		Bellows							
	in.	mm	in.	mm	in.	mm	in.	mm	in.	mm	in.	mm	lb.	kg
1905	4.13	104.9	4.50	114.3	17.00	431.8	18.00	457.2	5.44	138.2	1.13	28.7	40	18.1
1906	4.13	104.9	4.50	114.3	17.00	431.8	18.00	457.2	5.44	138.2	1.38	35.1	40	18.1
1910	4.13	104.9	4.50	114.3	17.50	444.5	18.50	469.9	5.44	138.2	1.38	35.1	50	22.7
1912	4.13	104.9	4.50	114.3	18.25	463.6	19.25	489.0	6.31	160.3	1.38	35.1	55	24.9
1914	4.13	104.9	5.50	139.7	21.75	552.5	22.75	577.9	7.81	198.4	1.94	49.3	95	43.1
1916	4.13	104.9	5.50	139.7	21.75	552.5	22.75	577.9	7.81	198.4	1.94	49.3	95	43.1
1918	5.50	139.7	7.00	177.8	26.50	673.1	27.50	698.5	8.88	225.6	2.44	62.0	150	68.0
1920	4.13	104.9	4.50	114.3	17.50	444.5	18.50	469.9	5.44	138.2	1.38	35.1	50	22.7
1922	4.13	104.9	4.50	114.3	17.50	444.5	18.50	469.9	5.44	138.2	1.38	35.1	50	22.7
1924	4.13	104.9	5.50	139.7	21.75	552.5	22.75	577.9	7.81	198.4	1.94	49.3	95	43.1
1926	4.13	104.9	5.50	139.7	21.75	552.5	22.75	577.9	7.81	198.4	1.94	49.3	95	43.1
1928	5.50	139.7	7.00	177.8	26.50	673.1	27.50	698.5	8.88	225.6	2.44	62.0	150	68.0

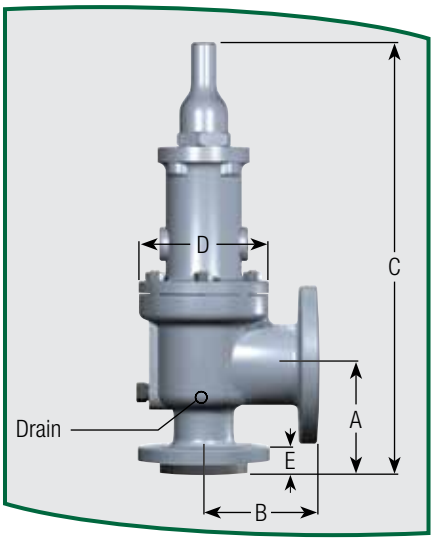

Dimensions & Weights (Contd.)

Valve Data - F Orifice

Valve Type	A		B		C				D		E		Approximate Weight	
					Standard		Bellows							
	in.	mm	in.	mm	in.	mm	in.	mm	in.	mm	in.	mm	lb.	kg
1905	4.88	124.0	4.75	120.7	17.75	450.9	18.75	476.3	5.44	138.2	1.25	31.8	40	18.1
1906	4.88	124.0	4.75	120.7	17.75	450.9	18.75	476.3	5.44	138.2	1.50	38.1	45	20.4
1910	4.88	124.0	6.00	152.4	18.25	463.6	19.25	489.0	5.44	138.2	1.56	39.6	50	22.7
1912	4.88	124.0	6.00	152.4	19.00	482.6	20.00	508.0	6.31	160.3	1.56	39.6	60	27.2
1914	4.88	124.0	6.50	165.1	22.50	571.5	23.50	596.9	7.81	198.4	1.94	49.3	100	45.4
1916	4.88	124.0	6.50	165.1	22.50	571.5	23.50	596.9	7.81	198.4	1.94	49.3	100	45.4
1918	5.50	139.7	7.00	177.8	26.50	673.1	27.50	698.5	8.88	225.6	2.44	62.0	150	68.0
1920	4.88	124.0	6.00	152.4	18.25	463.6	19.25	489.0	5.44	138.2	1.56	39.6	50	22.7
1922	4.88	124.0	6.00	152.4	18.25	463.6	19.25	489.0	5.44	138.2	1.56	39.6	50	22.7
1924	4.88	124.0	6.50	165.1	22.50	571.5	23.50	596.9	7.81	198.4	1.94	49.3	100	45.4
1926	4.88	124.0	6.50	165.1	22.50	571.5	23.50	596.9	7.81	198.4	1.94	49.3	100	45.4
1928	5.50	139.7	7.00	177.8	26.50	673.1	27.50	698.5	8.88	225.6	2.44	62.0	150	68.0

Valve Data - G Orifice

Valve Type	A		B		C				D		E		Approximate Weight	
					Standard		Bellows							
	in.	mm	in.	mm	in.	mm	in.	mm	in.	mm	in.	mm	lb.	kg
1905	4.88	124.0	7.75	196.9	17.75	450.9	19.00	482.6	5.44	138.2	1.25	31.8	55	24.9
1906	4.88	124.0	4.75	120.7	17.75	450.9	19.00	482.6	5.44	138.2	1.50	38.1	55	24.9
1910	4.88	124.0	6.00	152.4	18.25	463.6	19.50	495.3	5.44	138.2	1.56	39.6	60	27.2
1912	4.88	124.0	6.00	152.4	19.00	482.6	20.25	514.4	6.31	160.3	1.56	39.6	65	29.5
1914	4.88	124.0	6.50	165.1	22.50	571.5	23.75	603.3	7.81	198.4	1.94	49.3	95	43.1
1916	6.13	155.7	6.75	171.5	23.75	603.3	25.00	635.0	7.81	198.4	2.19	55.6	100	45.4
1918	6.13	155.7	6.75	171.5	23.75	603.3	25.00	635.0	7.81	198.4	2.69	68.3	110	49.9
1920	4.88	124.0	6.00	152.4	18.25	463.6	19.50	495.3	5.44	138.2	1.56	39.6	60	27.2
1922	4.88	124.0	6.00	152.4	19.00	482.6	20.25	514.4	6.31	160.3	1.56	39.6	65	29.5
1924	4.88	124.0	6.50	165.1	22.50	571.5	23.75	603.3	7.81	198.4	1.94	49.3	95	43.1
1926	6.13	155.7	6.75	171.5	23.75	603.3	25.00	635.0	7.81	198.4	2.19	55.6	100	45.4
1928	6.13	155.7	6.75	171.5	23.75	603.3	25.00	635.0	7.81	198.4	2.69	68.3	110	49.9

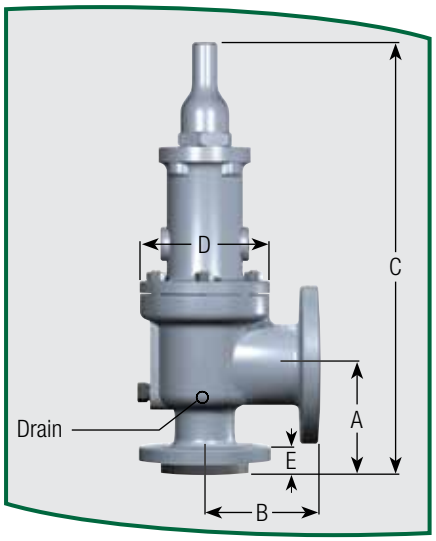

Dimensions & Weights (Contd.)

Valve Data - H Orifice

Valve Type	A		B		C				D		E		Approximate Weight	
					Standard		Bellows							
	in.	mm	in.	mm	in.	mm	in.	mm	in.	mm	in.	mm	lb.	kg
1905	5.13	130.3	4.88	124.0	19.50	495.3	19.50	495.3	6.31	160.3	1.25	31.8	60	27.2
1906	5.13	130.3	4.88	124.0	19.50	495.3	19.50	495.3	6.31	160.3	1.56	39.6	60	27.2
1910	5.13	130.3	4.88	124.0	20.25	514.4	20.25	514.4	6.31	160.3	1.69	42.9	65	29.5
1912	6.06	153.9	6.38	162.1	23.00	584.2	23.00	584.2	7.00	177.8	1.69	42.9	85	38.6
1914	6.06	153.9	6.38	162.1	26.00	660.4	26.00	660.4	8.25	209.6	2.19	55.6	130	59.0
1916	6.06	153.9	6.38	162.1	26.00	660.4	26.00	660.4	8.25	209.6	2.19	55.6	140	63.5
1920	5.13	130.3	4.88	124.0	20.25	514.4	20.25	514.4	6.31	160.3	1.69	42.9	65	29.5
1922	5.13	130.3	4.88	124.0	20.25	514.4	20.25	514.4	6.31	160.3	1.69	42.9	65	29.5
1924	6.06	153.9	6.38	162.1	23.00	584.2	23.00	584.2	7.00	177.8	2.19	55.6	90	40.8
1926	6.06	153.9	6.38	162.1	26.00	660.4	26.00	660.4	8.25	209.6	2.19	55.6	140	63.5

Valve Data - G Orifice

Valve Type	A		B		C				D		E		Approximate Weight	
					Standard		Bellows							
	in.	mm	in.	mm	in.	mm	in.	mm	in.	mm	in.	mm	lb.	kg
1905	5.38	136.7	4.88	124.0	21.25	539.8	21.25	539.8	6.88	174.8	1.31	33.3	75	34.0
1906	5.38	136.7	4.88	124.0	21.25	539.8	21.25	539.8	6.88	174.8	1.56	39.6	75	34.0
1910	7.25	184.2	7.13	181.1	25.63	651.0	25.63	651.0	7.38	187.5	1.81	46.0	100	45.4
1912	7.25	184.2	7.13	181.1	29.88	759.0	29.88	759.0	9.00	228.6	1.81	46.0	170	77.1
1914	7.25	184.2	7.13	181.1	29.75	755.7	29.75	755.7	9.00	228.6	2.19	55.6	195	88.5
1916	7.25	184.2	7.13	181.1	29.75	755.7	29.75	755.7	9.00	228.6	2.56	65.0	220	99.8
1920	7.25	184.2	7.13	181.1	25.63	651.0	25.63	651.0	7.38	187.5	1.81	46.0	100	45.4
1922	7.25	184.2	7.13	181.1	25.63	651.0	25.63	651.0	7.38	187.5	1.81	46.0	100	45.4
1924	7.25	184.2	7.13	181.1	29.88	759.0	29.88	759.0	9.00	228.6	2.31	58.7	180	81.6
1926	7.25	184.2	7.13	181.1	29.75	755.7	29.75	755.7	9.00	228.6	2.56	65.0	220	99.8

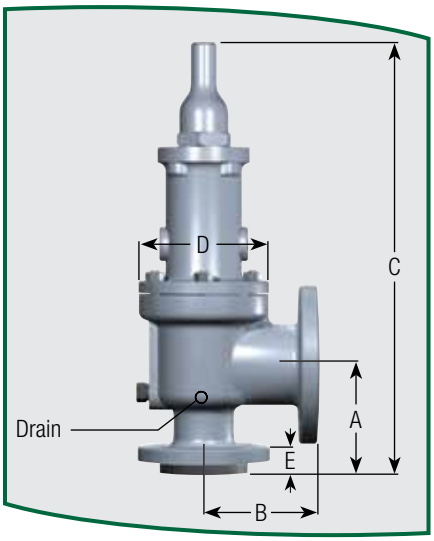

Dimensions & Weights (Contd.)

Valve Data - K Orifice

Valve Type	A		B		C				D		E		Approximate Weight	
					Standard		Bellows							
	in.	mm	in.	mm	in.	mm	in.	mm	in.	mm	in.	mm	lb.	kg
1905	6.13	155.7	6.38	162.1	25.50	647.7	24.50	622.3	7.38	187.5	1.44	36.6	110	49.9
1906	6.13	155.7	6.75	171.5	24.50	622.3	24.50	622.3	7.38	187.5	1.81	46.0	115	52.2
1910	6.13	155.7	6.38	162.1	28.00	711.2	28.00	711.2	7.75	196.9	1.94	49.3	140	63.5
1912	7.25	184.2	7.13	181.1	29.25	743.0	29.25	743.0	7.75	196.9	1.94	49.3	150	68.0
1914	7.81	198.4	8.50	215.9	35.25	895.4	35.25	895.4	10.50	266.7	2.19	55.6	300	136.1
1916	7.75	196.9	8.50	215.9	35.25	895.4	35.25	895.4	10.50	266.7	2.56	65.0	320	145.1
1920	6.13	155.7	6.38	162.1	28.00	711.2	28.00	711.2	7.75	196.9	1.94	49.3	140	63.5
1922	6.13	155.7	6.38	162.1	28.00	711.2	28.00	711.2	7.75	196.9	1.94	49.3	140	63.5
1924	7.81	198.4	8.50	215.9	35.25	895.4	35.25	895.4	10.50	266.7	2.19	55.6	300	136.1
1926	7.75	196.9	8.50	215.9	35.25	895.4	35.25	895.4	10.50	266.7	2.56	65.0	320	145.1

Valve Data - L Orifice

Valve Type	A		B		C				D		E		Approximate Weight	
					Standard		Bellows							
	in.	mm	in.	mm	in.	mm	in.	mm	in.	mm	in.	mm	lb.	kg
1905	6.13	155.7	6.50	165.1	28.75	730.3	28.75	730.3	8.88	225.6	1.44	36.6	140	63.5
1906	6.13	155.7	6.50	165.1	28.75	730.3	28.75	730.3	8.88	225.6	1.81	46.0	145	65.8
1910	7.06	179.3	7.13	181.1	32.00	812.8	32.00	812.8	9.50	241.3	1.94	49.3	220	99.8
1912	7.06	179.3	8.00	203.2	32.00	812.8	32.00	812.8	9.50	241.3	2.19	55.6	230	104.3
1914	7.75	196.9	8.75	222.3	37.25	946.2	37.25	946.2	12.25	311.2	2.44	62.0	360	163.3
1916	7.75	196.9	8.75	222.3	37.25	946.2	37.25	946.2	12.25	311.2	2.81	71.4	370	167.8
1920	7.06	179.3	7.13	181.1	32.00	812.8	32.00	812.8	9.50	241.3	1.94	49.3	220	99.8
1922	7.06	179.3	8.00	203.2	32.00	812.8	32.00	812.8	9.50	241.3	2.19	55.6	230	104.3
1924	7.75	196.9	8.75	222.3	37.25	946.2	37.25	946.2	12.25	311.2	2.44	62.0	360	163.3
1926	7.75	196.9	8.75	222.3	37.25	946.2	37.25	946.2	12.25	311.2	2.81	71.4	370	167.8

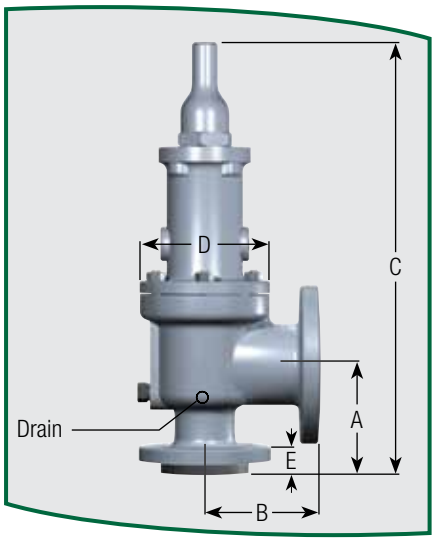

Dimensions & Weights (Contd.)

Valve Data - M Orifice

Valve Type	A		B		C				D		E		Approximate Weight	
					Standard		Bellows							
	in.	mm	in.	mm	in.	mm	in.	mm	in.	mm	in.	mm	lb.	kg
1905	7.00	177.8	7.25	184.2	29.75	755.7	29.75	755.7	9.38	238.3	1.63	41.4	185	83.9
1906	7.00	177.8	7.25	184.2	29.75	755.7	29.75	755.7	9.38	238.3	1.94	49.3	190	86.2
1910	7.00	177.8	7.25	184.2	32.00	812.8	32.00	812.8	9.38	238.3	1.94	49.3	230	104.3
1912	7.00	177.8	8.00	203.2	36.25	920.8	36.25	920.8	10.75	273.1	2.19	55.6	300	136.1
1914	7.75	196.9	8.75	222.3	37.00	939.8	37.00	939.8	10.75	273.1	2.44	62.0	340	154.2
1920	7.00	177.8	7.25	184.2	32.00	812.8	32.00	812.8	9.38	238.3	1.94	49.3	230	104.3
1922	7.00	177.8	8.00	203.2	36.25	920.8	36.25	920.8	10.75	273.1	2.19	55.6	300	136.1
1924	7.75	196.9	8.75	222.3	37.00	939.8	37.00	939.8	10.75	273.1	2.44	62.0	340	154.2

Valve Data - N Orifice

Valve Type	A		B		C				D		E		Approximate Weight	
					Standard		Bellows							
	in.	mm	in.	mm	in.	mm	in.	mm	in.	mm	in.	mm	lb.	kg
1905	7.75	196.9	8.25	209.6	33.00	838.2	33.00	838.2	10.13	257.3	1.63	41.4	220	99.8
1906	7.75	196.9	8.25	209.6	33.00	838.2	33.00	838.2	10.13	257.3	1.94	49.3	225	102.1
1910	7.75	196.9	8.25	209.6	34.25	870.0	34.25	870.0	10.50	266.7	1.94	49.3	260	117.9
1912	7.75	196.9	8.75	222.3	39.00	990.6	39.00	990.6	11.75	298.5	2.19	55.6	360	163.3
1914	7.75	196.9	8.75	222.3	39.00	990.6	39.00	990.6	11.75	298.5	2.44	62.0	380	172.4
1920	7.75	196.9	8.25	209.6	34.25	870.0	34.25	870.0	10.50	266.7	1.94	49.3	260	117.9
1922	7.75	196.9	8.75	222.3	39.00	990.6	39.00	990.6	11.75	298.5	2.19	55.6	360	163.3
1924	7.75	196.9	8.75	222.3	39.00	990.6	39.00	990.6	11.75	298.5	2.44	62.0	380	172.4

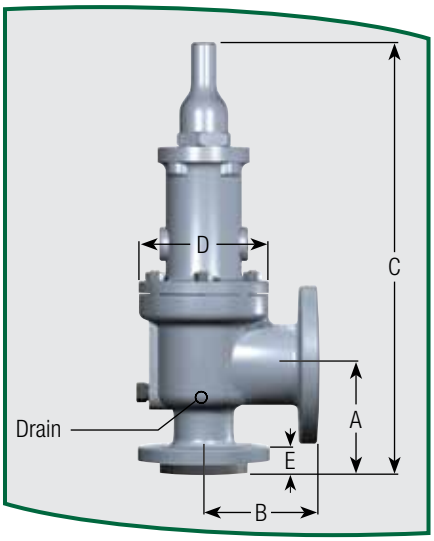

Dimensions & Weights (Contd.)

Valve Data - P Orifice

Valve Type	A		B		C				D		E		Approximate Weight	
					Standard		Bellows							
	in.	mm	in.	mm	in.	mm	in.	mm	in.	mm	in.	mm	lb.	kg
1905	7.13	181.1	9.00	228.6	34.25	870.0	34.25	870.0	11.00	279.4	1.63	41.4	260	117.9
1906	7.13	181.1	9.00	228.6	24.25	616.0	34.25	870.0	11.00	279.4	1.94	49.3	270	122.5
1910	8.88	225.6	10.00	254.0	41.00	1041.4	41.00	1041.4	11.50	292.1	1.94	49.3	350	158.8
1912	8.88	225.6	10.00	254.0	43.50	1104.9	43.50	1104.9	13.88	352.6	2.19	55.6	530	240.4
1914	8.88	225.6	10.00	254.0	43.50	1104.9	43.50	1104.9	13.88	352.6	2.44	62.0	545	247.2
1920	8.88	225.6	10.00	254.0	41.00	1041.4	41.00	1041.4	11.50	292.1	1.94	49.3	350	158.8
1923	8.88	225.6	10.00	254.0	43.50	1104.9	43.50	1104.9	13.88	352.6	2.19	55.6	530	240.4
1924	8.88	225.6	10.00	254.0	43.50	1104.9	43.50	1104.9	13.88	352.6	2.44	62.0	545	247.2

Valve Data - Q Orifice

Valve Type	A		B		C				D		E		Approximate Weight	
					Standard		Bellows							
	in.	mm	in.	mm	in.	mm	in.	mm	in.	mm	in.	mm	lb.	kg
1905	9.44	239.8	9.50	241.3	41.00	1041.4	41.00	1041.4	13.63	346.2	1.81	46.0	430	195.0
1906	9.44	239.8	9.50	241.3	41.00	1041.4	41.00	1041.4	13.63	346.2	13.63	346.2	445	201.8
1910	9.44	239.8	9.50	241.3	43.25	1098.6	43.25	1098.6	14.00	355.6	2.25	57.2	530	240.4
1912	9.44	239.8	9.50	241.3	46.00	1168.4	46.00	1168.4	14.25	362.0	2.69	68.3	645	292.6
1920	9.44	239.8	9.50	241.3	41.00	1041.4	41.00	1041.4	13.63	346.2	2.25	57.2	445	201.8
1922	9.44	239.8	9.50	241.3	46.00	1168.4	46.00	1168.4	14.25	362.0	2.69	68.3	645	292.6

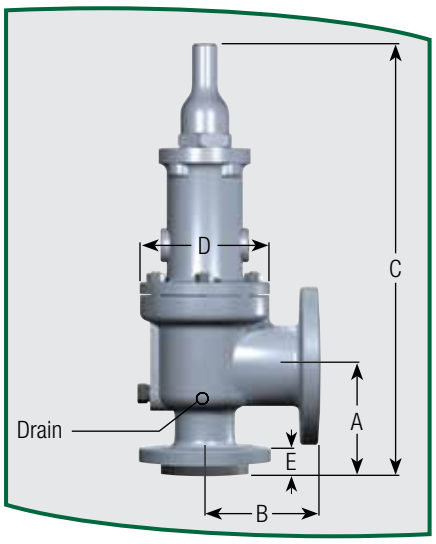

Dimensions & Weights (Contd.)

Valve Data - R Orifice

Valve Type	A		B		C				D		E		Approximate Weight	
					Standard		Bellows							
	in.	mm	in.	mm	in.	mm	in.	mm	in.	mm	in.	mm	lb.	kg
1905	9.44	239.8	9.50	241.3	43.00	1092.2	43.00	1092.2	14.50	368.3	1.81	46.0	495	224.5
1906	9.44	239.8	9.50	241.3	43.00	1092.2	43.00	1092.2	14.50	368.3	2.25	57.2	510	231.3
1910	9.44	239.8	10.50	266.7	45.50	1155.7	45.50	1155.7	14.50	368.3	2.25	57.2	550	249.5
1912	9.44	239.8	10.50	266.7	47.50	1206.5	47.50	1206.5	15.13	384.3	2.69	68.3	675	306.2
1920	9.44	239.8	9.50	241.3	43.00	1092.2	43.00	1092.2	14.50	368.3	2.25	57.2	510	231.3
1922	9.44	239.8	10.50	266.7	47.50	1206.5	47.50	1206.5	15.13	384.3	2.69	68.3	675	306.2

Valve Data - T Orifice

Valve Type	A		B		C				D		E		Approximate Weight	
					Standard		Bellows							
	in.	mm	in.	mm	in.	mm	in.	mm	in.	mm	in.	mm	lb.	kg
1905	10.88	276.4	11.00	279.4	47.50	1206.5	47.50	1206.5	16.50	419.1	1.94	49.3	620	281.2
1906	10.88	276.4	11.00	279.4	47.25	1200.2	47.25	1200.2	16.50	419.1	2.44	62.0	640	290.3
1910	10.88	276.4	11.00	279.4	53.38	1355.9	53.38	1355.9	16.50	419.1	2.44	62.0	840	381.0
1912	10.88	276.4	11.00	279.4	53.38	1355.9	53.38	1355.9	16.50	419.1	2.44	62.0	840	381.0
1920	10.88	276.4	11.00	279.4	53.38	1355.9	53.38	1355.9	16.50	419.1	2.44	62.0	840	381.0
1922	10.88	276.4	11.00	279.4	53.38	1355.9	53.38	1355.9	16.50	419.1	2.44	62.0	840	381.0

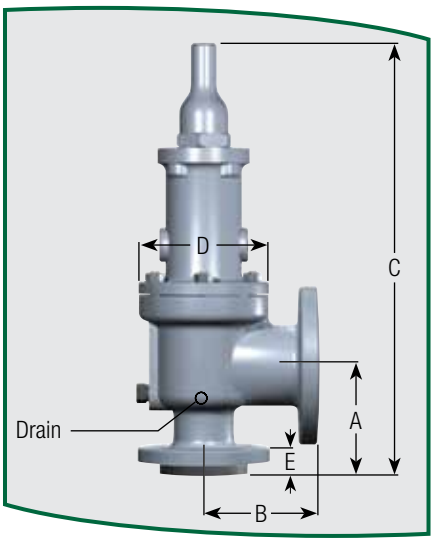

Dimensions & Weights (Contd.)

Valve Data - U Orifice

Valve Type	A		B		C				D		E		Approximate Weight	
					Standard		Bellows							
	in.	mm	in.	mm	in.	mm	in.	mm	in.	mm	in.	mm	lb.	kg
1905	10.88	276.4	11.00	279.4	47.50	1206.5	47.50	1206.5	16.50	419.1	1.94	49.3	620	281.2
1906	10.88	276.4	11.00	279.4	47.25	1200.2	47.25	1200.2	16.50	419.1	2.44	62.0	640	290.3
1910	10.88	276.4	11.00	279.4	53.38	1355.9	53.38	1355.9	16.50	419.1	2.44	62.0	840	381.0
1920	10.88	276.4	11.00	279.4	53.38	1355.9	53.38	1355.9	16.50	419.1	2.44	62.0	840	381.0

Valve Data - V Orifice

Valve Type	A		B		C				D		E		Approximate Weight	
					Standard		Bellows							
	in.	mm	in.	mm	in.	mm	in.	mm	in.	mm	in.	mm	lb.	kg
1905	12.00	304.8	16.00	406.4	62.00	1574.8	62.00	1574.8	21.75	552.5	2.00	50.8	1600	725.7
1906	12.00	304.8	16.00	406.4	62.00	1574.8	62.00	1574.8	21.75	552.5	2.69	68.3	1700	771.1
1910	12.00	304.8	16.00	406.4	66.00	1676.4	66.00	1676.4	24.50	622.3	2.69	68.3	2000	907.2
1920	12.00	304.8	16.00	406.4	66.00	1676.4	66.00	1676.4	24.50	622.3	2.69	68.3	2000	907.2

Valve Data - W Orifice

Valve Type	A		B		C				D		E		Approximate Weight	
					Standard		Bellows							
	in.	mm	in.	mm	in.	mm	in.	mm	in.	mm	in.	mm	lb.	kg
1905	14.00	355.6	16.00	406.4	70.00	1778.0	70.00	1778.0	24.50	622.3	2.81	71.4	2800	1270.1
1906	14.00	355.6	16.00	406.4	70.00	1778.0	70.00	1778.0	24.50	622.3	2.94	74.7	2860	1297.3
1910	14.00	355.6	16.00	406.4	70.00	1778.0	70.00	1778.0	24.50	622.3	2.94	74.7	2860	1297.3
1920	14.00	355.6	16.00	406.4	70.00	1778.0	70.00	1778.0	24.50	622.3	2.81	71.4	2800	1270.1

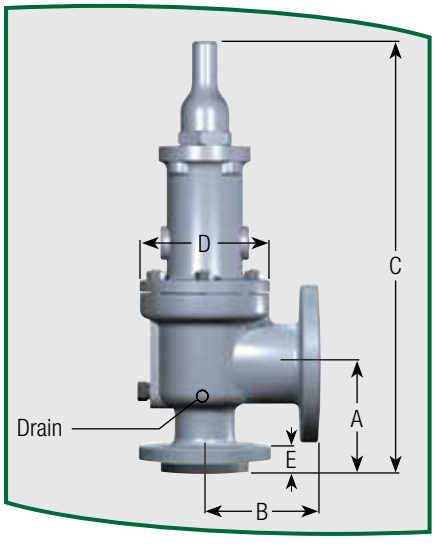

Pressure / Temperature

Pressure / Temperature Tables

How To Use Rating Tables

The included tables specify important data about the valve including valve sizes, flange ratings, pressure and temperature limits, back pressure ratings, and materials with allowable temperature ranges.

After determining valve size from the Valve Sizing section, or capacity tables in this section, select the proper set of tables and graphs (in the following pages) for the size valve. Enter the pressure/temperature graphs and determine valve type. Review the table of data for that size valve to get other pertinent information.

Note 1 The pressure/temperature limitations shown in the following tables are based on the limits specified in API526 applicable to the 1900 series supplied in standard materials of construction. For pressure/temperature limitations of valves made from special materials, consult the factory or the SRVS sizing program. (Note that 1900-30 bellows design valve supplied with the standard Inconel 625 bellows is limited to a temperature range of 400°F (204°C) to 1500°F (816°C).)

Note 2 ASME Class 300 outlet flanges are permitted for mating purposes only on valves that are normally supplied with standard ASME Class 150 pressure rating. For back pressure applications exceeding the ASME Class 150 pressure rating use SRVS sizing program or contact the factory for assistance.

Note 3 When soft seats are used, they may govern the valve pressure/temperature rating.

Procedure

Example	
Valve Set Pressure	500 psig (34.47 barg)
Back Pressure	50 psig (3.45 barg)
Temperature	100°F (37.8°C)
Valve	"J"

Enter the graph on page 1900.71 for the "J" size, select set pressure on the bottom scale at 500 psig (34.47 barg), follow this line vertically upward until it intersects the 100°F (38°C) line. The selection is a 1910Jc valve.

Results

Referring to the table on page 1900.70, the valve is 3" (76.2 mm) - 300 x 4" (101.6 mm) - 150 with a carbon steel body and spring. The back pressure limit is satisfactory for 50 psig (3.45 barg) back pressure.

Springs

Within given temperature limits, alloy steel springs are specified. Because of material availability from vendors, most springs are of alloy steel construction which provides superior strength and corrosion resistant properties.

Materials

The operating temperature should be used to select the materials in valves for fire sizing applications.

Minimum Set Pressures

The minimum set pressures of the 1900 flanged valves are in accordance with the following table.

Orifice	Low Set Pressure Limit[2]			
	Conventional Valve		Bellows Valve[1]	
	psig	barg	psig	barg
D	5	0.34	15	1.03
E	5	0.34	15	1.03
F	5	0.34	15	1.03
G	4	0.28	15	1.03
H	4	0.28	15	1.03
J	5	0.34	10	0.69
K	5	0.34	10	0.69
L	6	0.41	10	0.69
M	6	0.41	10	0.69
N	9	0.62	10	0.69
P	7	0.48	10	0.69
Q	7	0.48	10	0.69
R	7	0.48	10	0.69
T	9	0.62	10	0.69
V	15	1.03	15	1.03
W	7	0.48	15	1.03

Notes

1 The bonnet must be vented when a bellows is used.

2 Valves with set pressure less than 15 psig cannot be stamped with the ASME stamp.

Pressure / Temperature (Contd.)

Pressure Temperature Ratings for D Orifice

API Ratings (D Orifice - 0.110 in² (0.71 cm²))													Backpressure Ratings @ 100°F (37.8°C)					
Valve Type	Connection				Standard Material of Construction								Conventional		Bellows			
	Inlet		Outlet		-20 to 100°F (-28.9 to 37.8°C)		450°F (232.2°C)		800°F (426.7°C)		1000°F (537.8°C)				LP		HP	
	in.	mm	in.	mm	psig	barg	psig	barg	psig	barg	psig	barg	psig	barg	psig	barg	psig	barg
1905D	1.00	25.4	2.00	50.80	285	19.65	185	12.76	80	5.52	-	-	285	19.65	128	8.83	230	15.86
1906D	1.00	25.4	2.00	50.80	285	19.65	285	19.65	285	19.65	-	-	285	19.65	128	8.83	230	15.86
1910D	1.00	25.4	2.00	50.80	740	51.02	615	42.40	410	28.27	-	-	285	19.65	128	8.83	230	15.86
1912D	1.00	25.4	2.00	50.80	1480	102.04	1235	85.15	825	56.88	-	-	285	19.65	128	8.83	230	15.86
1914D	1.50	38.1	2.00	50.80	2220	153.06	1845	127.21	1235	85.15	-	-	600	41.37	128	8.83	500	34.47
1916D	1.50	38.1	2.00	50.80	3705	255.45	3080	212.36	2060	142.03	-	-	600	41.37	128	8.83	500	34.47
1918D	1.50	38.1	3.00	76.20	6000	413.69	6000	413.69	3430	236.49	-	-	740	51.02	128	8.83	500	34.47
1920D	1.00	25.4	2.00	50.80	-	-	-	-	510	35.16	215	14.82	285	19.65	128	8.83	230	15.86
1922D	1.00	25.4	2.00	50.80	-	-	-	-	1015	69.98	430	29.65	285	19.65	128	8.83	230	15.86
1924D	1.50	38.1	2.00	50.80	-	-	-	-	1525	105.15	650	44.82	600	41.37	128	8.83	500	34.47
1926D	1.50	38.1	2.00	50.80	-	-	-	-	2540	175.13	1080	74.46	600	41.37	128	8.83	500	34.47
1928D	1.50	38.1	3.00	76.20	-	-	-	-	4230	291.65	1800	124.11	740	51.02	128	8.83	500	34.47

Pressure Temperature Ratings for D Orifice

ASME Ratings (D Orifice - 0.128 in² (0.825 cm²) Actual)													Backpressure Ratings @ 100°F (37.8°C)					
Valve Type	Connection				Standard Material of Construction								Conventional		Bellows			
	Inlet		Outlet		-20 to 100°F (-28.9 to 37.8°C)		450°F (232.2°C)		800°F (426.7°C)		1000°F (537.8°C)				LP		HP	
	in.	mm	in.	mm	psig	barg	psig	barg	psig	barg	psig	barg	psig	barg	psig	barg	psig	barg
1905D	1.00	25.4	2.00	50.80	290	19.99	185	12.76	80	5.52	-	-	290	19.99	128	8.83	290	19.99
1906D	1.00	25.4	2.00	50.80	290	19.99	290	19.99	290	19.99	-	-	290	19.99	128	8.83	290	19.99
1910D	1.00	25.4	2.00	50.80	750	51.71	685	47.23	410	28.27	-	-	290	19.99	128	8.83	290	19.99
1912D	1.00	25.4	2.00	50.80	1500	103.42	1368	94.32	825	56.88	-	-	290	19.99	128	8.83	290	19.99
1914D	1.50	38.1	2.00	50.80	2250	155.13	2053	141.55	1235	85.15	-	-	750	51.71	128	8.83	750	51.71
1916D	1.50	38.1	2.00	50.80	3750	258.55	3423	236.01	2055	141.69	-	-	750	51.71	128	8.83	750	51.71
1918D	1.50	38.1	3.00	76.20	6250	430.92	5703	393.21	3430	236.49	-	-	750	51.71	128	8.83	750	51.71
1920D	-	-	-	-	-	-	-	-	510	35.16	215	14.82	290	19.99	128	8.83	290	19.99
1922D	-	-	-	-	-	-	-	-	1015	69.98	430	29.65	290	19.99	128	8.83	290	19.99
1924D	-	-	-	-	-	-	-	-	1525	105.15	650	44.82	750	51.71	128	8.83	750	51.71
1926D	-	-	-	-	-	-	-	-	2540	175.13	1080	74.46	750	51.71	128	8.83	750	51.71
1928D	-	-	-	-	-	-	-	-	4230	291.65	1800	124.11	750	51.71	128	8.83	750	51.71

Pressure / Temperature (Contd.)

Selection Chart for Vapors, Gases and Liquids

1900 & 1900-30 Series, D Orifice - API area: 0.110 Sq. in.

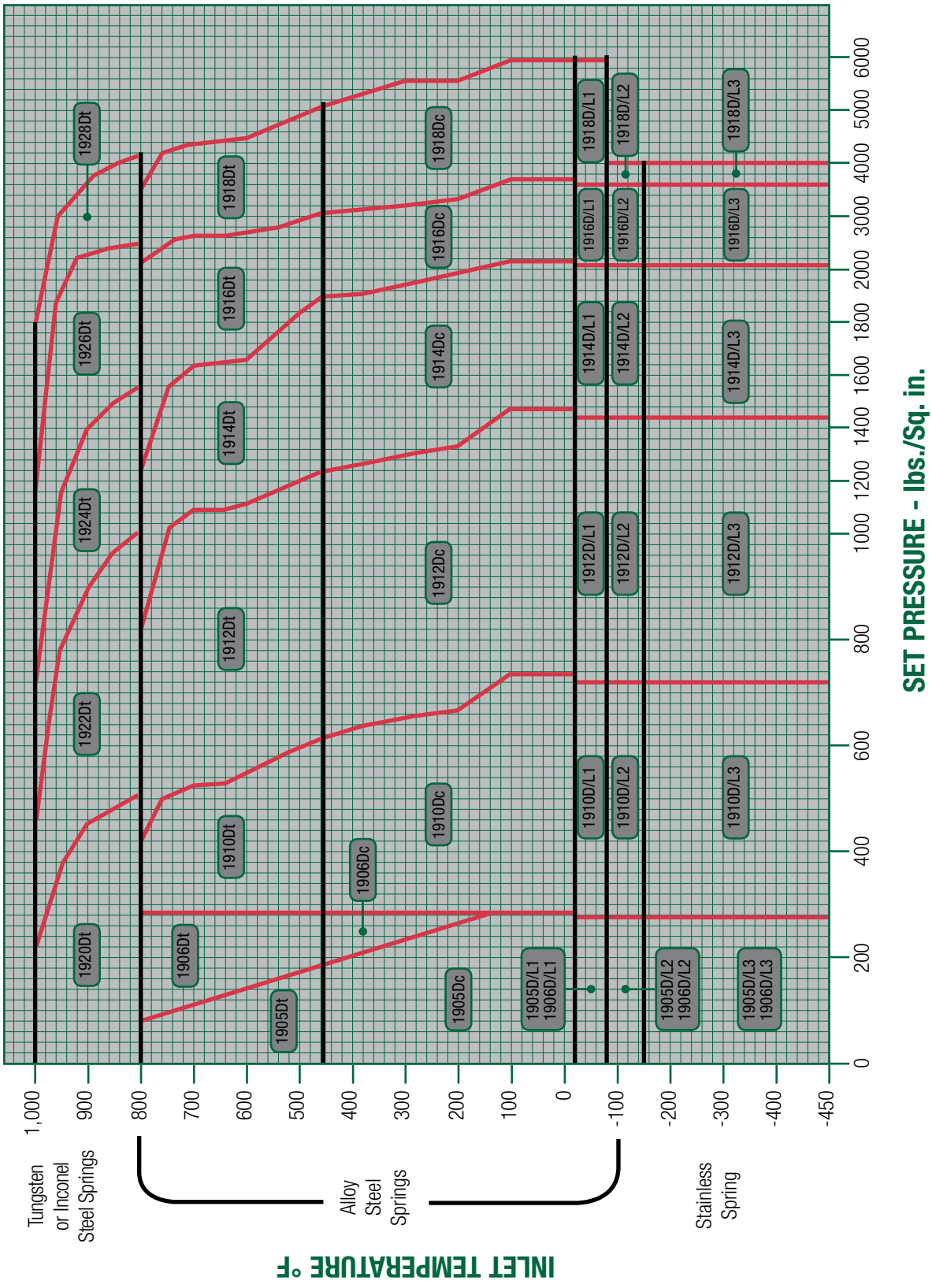

Pressure / Temperature (Contd.)

Pressure Temperature Ratings for E Orifice

API Ratings (E Orifice - 0.196 in² (1.265 cm²))													Backpressure Ratings @ 100°F (37.8°C)					
Valve Type	Connection				Standard Material of Construction								Conventional		Bellows			
	Inlet		Outlet		-20 to 100°F (-28.9 to 37.8°C)		450°F (232.2°C)		800°F (426.7°C)		1000°F (537.8°C)				LP		HP	
	in.	mm	in.	mm	psig	barg	psig	barg	psig	barg	psig	barg	psig	barg	psig	barg	psig	barg
1905E	1.00	25.4	2.00	50.80	285	19.65	185	12.76	80	5.52	-	-	285	19.65	128	8.83	230	15.86
1906E	1.00	25.4	2.00	50.80	285	19.65	285	19.65	285	19.65	-	-	285	19.65	128	8.83	230	15.86
1910E	1.00	25.4	2.00	50.80	740	51.02	615	42.40	410	28.27	-	-	285	19.65	128	8.83	230	15.86
1912E	1.00	25.4	2.00	50.80	1480	102.04	1235	85.15	825	56.88	-	-	285	19.65	128	8.83	230	15.86
1914E	1.50	38.1	2.00	50.80	2220	153.06	1845	127.21	1235	85.15	-	-	600	41.37	128	8.83	500	34.47
1916E	1.50	38.1	2.00	50.80	3705	255.45	3080	212.36	2060	142.03	-	-	600	41.37	128	8.83	500	34.47
1918E	1.50	38.1	3.00	76.20	6000	413.69	6000	413.69	3430	236.49	-	-	740	51.02	128	8.83	500	34.47
1920E	1.00	25.4	2.00	50.80	-	-	-	-	510	35.16	215	14.82	285	19.65	128	8.83	230	15.86
1922E	1.00	25.4	2.00	50.80	-	-	-	-	1015	69.98	430	29.65	285	19.65	128	8.83	230	15.86
1924E	1.50	38.1	2.00	50.80	-	-	-	-	1525	105.15	650	44.82	600	41.37	128	8.83	500	34.47
1926E	1.50	38.1	2.00	50.80	-	-	-	-	2540	175.13	1080	74.46	600	41.37	128	8.83	500	34.47
1928E	1.50	38.1	3.00	76.20	-	-	-	-	4230	291.65	1800	124.11	740	51.02	128	8.83	500	34.47

Pressure Temperature Ratings for E Orifice

ASME Ratings (E Orifice - 0.228 in² (1.470 cm²) Actual)													Backpressure Ratings @ 100°F (37.8°C)					
Valve Type	Connection				Standard Material of Construction								Conventional		Bellows			
	Inlet		Outlet		-20 to 100°F (-28.9 to 37.8°C)		450°F (232.2°C)		800°F (426.7°C)		1000°F (537.8°C)				LP		HP	
	in.	mm	in.	mm	psig	barg	psig	barg	psig	barg	psig	barg	psig	barg	psig	barg	psig	barg
1905E	1.00	25.4	2.00	50.80	290	19.99	185	12.76	80	5.52	-	-	290	19.99	128	8.83	290	19.99
1906E	1.00	25.4	2.00	50.80	290	19.99	290	19.99	290	19.99	-	-	290	19.99	128	8.83	290	19.99
1910E	1.00	25.4	2.00	50.80	750	51.71	685	47.23	410	28.27	-	-	290	19.99	128	8.83	290	19.99
1912E	1.00	25.4	2.00	50.80	1500	103.42	1368	94.32	825	56.88	-	-	290	19.99	128	8.83	290	19.99
1914E	1.50	38.1	2.00	50.80	2250	155.13	2053	141.55	1235	85.15	-	-	750	51.71	128	8.83	750	51.71
1916E	1.50	38.1	2.00	50.80	3750	258.55	3423	236.01	2055	141.69	-	-	750	51.71	128	8.83	750	51.71
1918E	1.50	38.1	3.00	76.20	6250	430.92	5703	393.21	3430	236.49	-	-	750	51.71	128	8.83	750	51.71
1920E	-	-	-	-	-	-	-	-	510	35.16	215	14.82	290	19.99	128	8.83	290	19.99
1922E	-	-	-	-	-	-	-	-	1015	69.98	430	29.65	290	19.99	128	8.83	290	19.99
1924E	-	-	-	-	-	-	-	-	1525	105.15	650	44.82	750	51.71	128	8.83	750	51.71
1926E	-	-	-	-	-	-	-	-	2540	175.13	1080	74.46	750	51.71	128	8.83	750	51.71
1928E	-	-	-	-	-	-	-	-	4230	291.65	1800	124.11	750	51.71	128	8.83	750	51.71

Pressure / Temperature (Contd.)

Selection Chart for Vapors, Gases and Liquids

1900 and 1900-30 Series, E Orifice - API Area: 0.196 Sq. in.

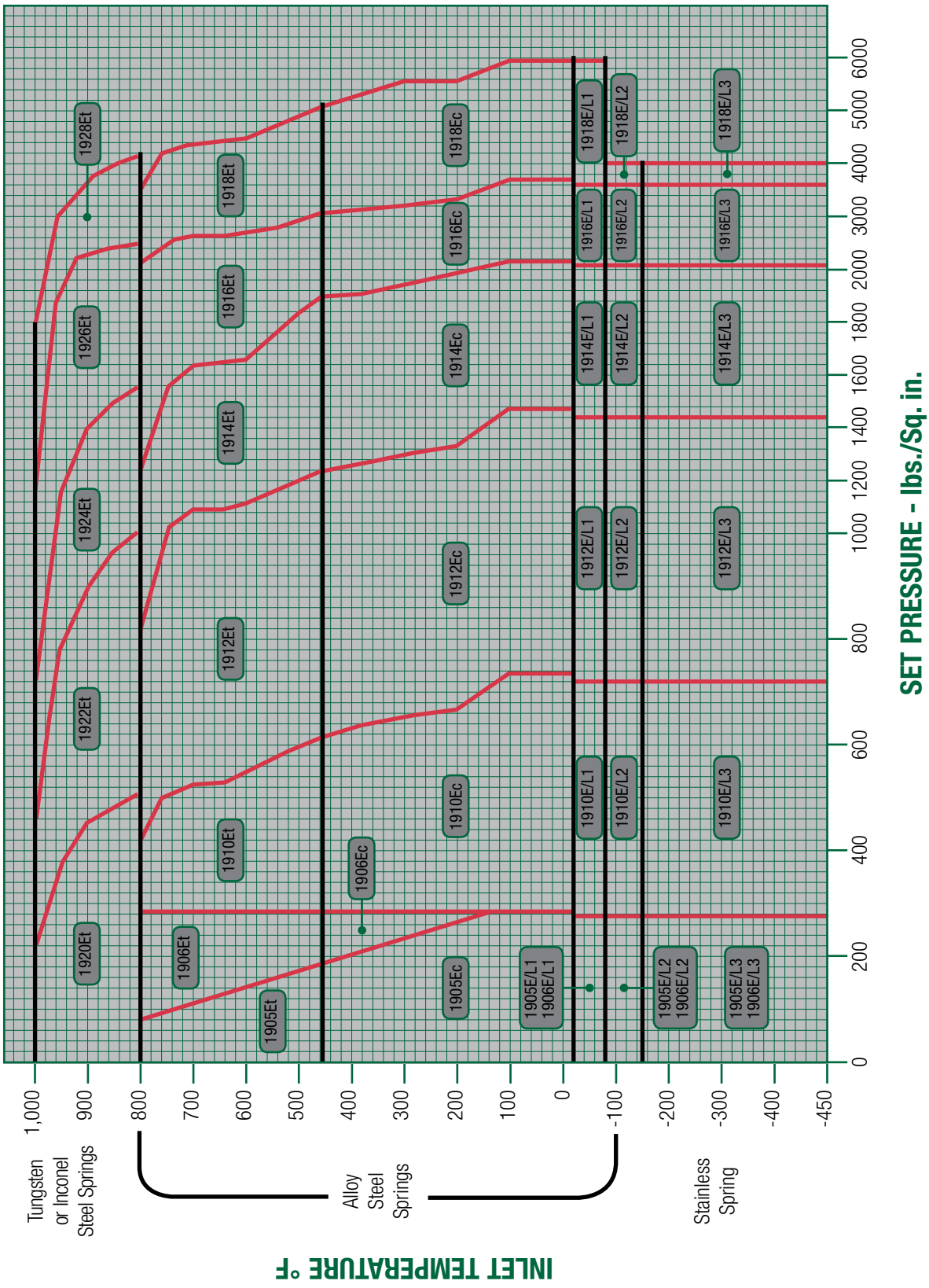

Pressure / Temperature (Contd.)

Pressure Temperature Ratings for F Orifice

API Ratings (F Orifice - 0.307 in² (1.981 cm²))													Backpressure Ratings @ 100°F (37.8°C)					
Valve Type	Connection				Standard Material of Construction								Conventional		Bellows			
	Inlet		Outlet		-20 to 100°F (-28.9 to 37.8°C)		450°F (232.2°C)		800°F (426.7°C)		1000°F (537.8°C)				LP		HP	
	in.	mm	in.	mm	psig	barg	psig	barg	psig	barg	psig	barg	psig	barg	psig	barg	psig	barg
1905F	1.50	38.1	2.00	50.80	285	19.65	185	12.76	80	5.52	-	-	285	19.65	128	8.83	230	15.86
1906F	1.50	38.1	2.00	50.80	285	19.65	285	19.65	285	19.65	-	-	285	19.65	128	8.83	230	15.86
1910F	1.50	38.1	2.00	50.80	740	51.02	615	42.40	410	28.27	-	-	285	19.65	128	8.83	230	15.86
1912F	1.50	38.1	2.00	50.80	1480	102.04	1235	85.15	825	56.88	-	-	285	19.65	128	8.83	230	15.86
1914F	1.50	38.1	3.00	76.20	2220	153.06	1845	127.21	1235	85.15	-	-	740	51.02	128	8.83	500	34.47
1916F	1.50	38.1	3.00	76.20	3705	255.45	3080	212.36	2060	142.03	-	-	740	51.02	128	8.83	500	34.47
1918F	1.50	38.1	3.00	76.20	5000	344.74	5000	344.74	3430	236.49	-	-	740	51.02	128	8.83	500	34.47
1920F	1.50	38.1	2.00	50.80	-	-	-	-	510	35.16	215	14.82	285	19.65	128	8.83	230	15.86
1922F	1.50	38.1	2.00	50.80	-	-	-	-	1015	69.98	430	29.65	285	19.65	128	8.83	230	15.86
1924F	1.50	38.1	3.00	76.20	-	-	-	-	1525	105.15	650	44.82	740	51.02	128	8.83	500	34.47
1926F	1.50	38.1	3.00	76.20	-	-	-	-	2540	175.13	1080	74.46	740	51.02	128	8.83	500	34.47
1928F	1.50	38.1	3.00	76.20	-	-	-	-	4230	291.65	1800	124.11	740	51.02	128	8.83	500	34.47

Pressure Temperature Ratings for F Orifice

ASME Ratings (F Orifice - 0.357 in² (2.302 cm²) Actual)													Backpressure Ratings @ 100°F (37.8°C)					
Valve Type	Connection				Standard Material of Construction								Conventional		Bellows			
	Inlet		Outlet		-20 to 100°F (-28.9 to 37.8°C)		450°F (232.2°C)		800°F (426.7°C)		1000°F (537.8°C)				LP		HP	
	in.	mm	in.	mm	psig	barg	psig	barg	psig	barg	psig	barg	psig	barg	psig	barg	psig	barg
1905F	1.50	38.1	2.00	50.80	290	19.99	185	12.76	80	5.52	-	-	290	19.99	128	8.83	290	19.99
1906F	1.50	38.1	2.00	50.80	290	19.99	290	19.99	290	19.99	-	-	290	19.99	128	8.83	290	19.99
1910F	1.50	38.1	2.00	50.80	750	51.71	685	47.23	410	28.27	-	-	290	19.99	128	8.83	290	19.99
1912F	1.50	38.1	2.00	50.80	1500	103.42	1368	94.32	825	56.88	-	-	290	19.99	128	8.83	290	19.99
1914F	1.50	38.1	3.00	76.20	2250	155.13	2053	141.55	1235	85.15	-	-	750	51.71	128	8.83	750	51.71
1916F	1.50	38.1	3.00	76.20	3750	258.55	3423	236.01	2055	141.69	-	-	750	51.71	128	8.83	750	51.71
1918F	1.50	38.1	3.00	76.20	6250	430.92	5703	393.21	3430	236.49	-	-	750	51.71	128	8.83	750	51.71
1920F	1.50	38.1	2.00	50.80	-	-	-	-	510	35.16	215	14.82	290	19.99	128	8.83	290	19.99
1922F	1.50	38.1	2.00	50.80	-	-	-	-	1015	69.98	430	29.65	290	19.99	128	8.83	290	19.99
1924F	1.50	38.1	3.00	76.20	-	-	-	-	1525	105.15	650	44.82	750	51.71	128	8.83	750	51.71
1926F	1.50	38.1	3.00	76.20	-	-	-	-	2540	175.13	1080	74.46	750	51.71	128	8.83	750	51.71
1928F	1.50	38.1	3.00	76.20	-	-	-	-	4230	291.65	1800	124.11	750	51.71	128	8.83	750	51.71

Pressure / Temperature (Contd.)

Selection Chart for Vapors, Gases and Liquids

1900 and 1900-30 Series, F Orifice - API Area: 0.307 Sq. in. (198 Sq. mm)

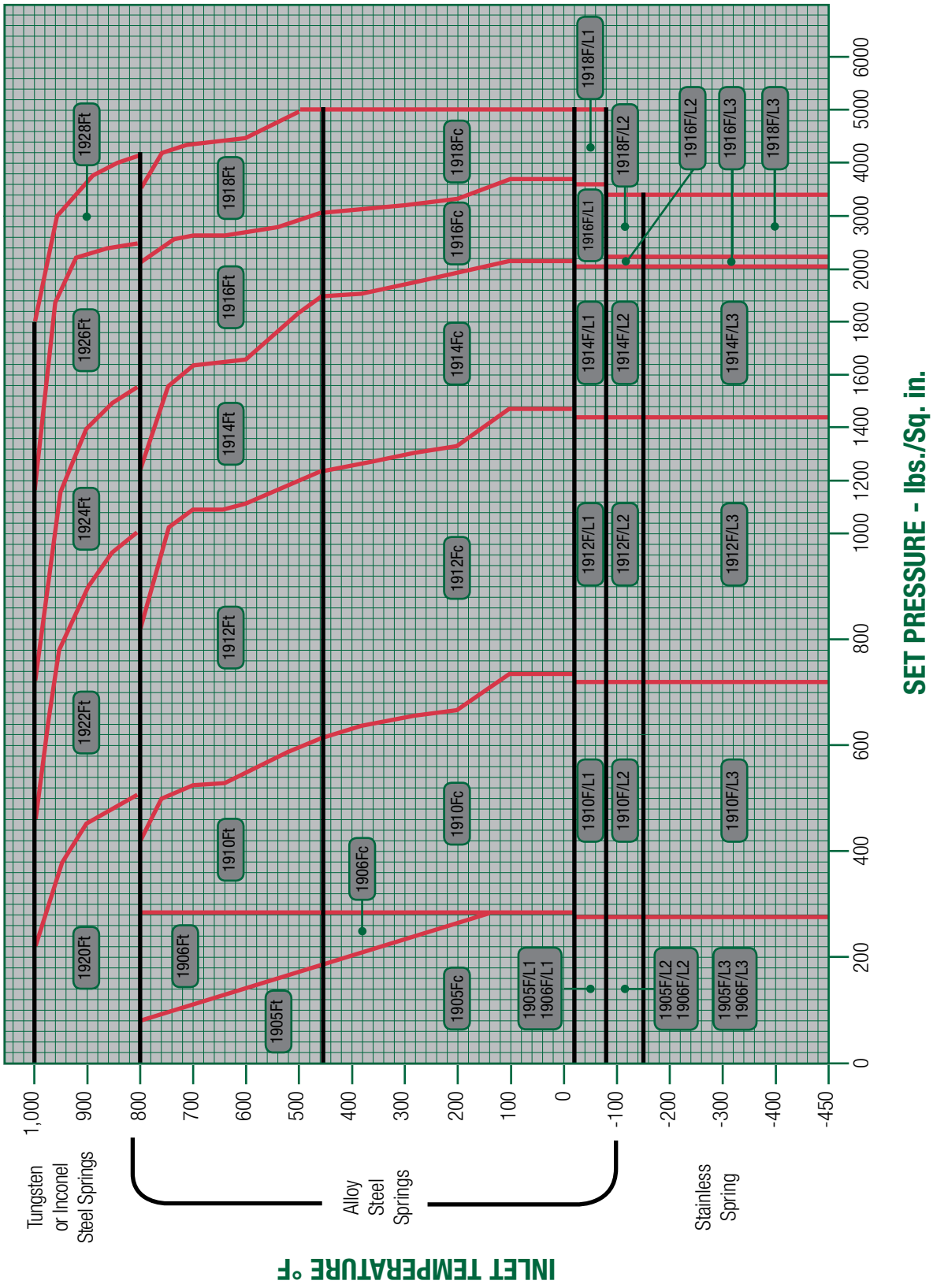

Pressure / Temperature (Contd.)

Pressure Temperature Ratings for G Orifice

API Ratings (G Orifice - 0.110 in² (0.710 cm²))													Backpressure Ratings @ 100°F (37.8°C)					
Valve Type	Connection				Standard Material of Construction								Conventional		Bellows			
	Inlet		Outlet		-20 to 100°F (-28.9 to 37.8°C)		450°F (232.2°C)		800°F (426.7°C)		1000°F (537.8°C)				LP		HP	
	in.	mm	in.	mm	psig	barg	psig	barg	psig	barg	psig	barg	psig	barg	psig	barg	psig	barg
1905G	1.50	38.1	3.00	76.20	285	19.65	185	12.76	80	5.52	-	-	285	19.65	140	9.65	230	15.86
1906G	1.50	38.1	3.00	76.20	285	19.65	285	19.65	285	19.65	-	-	285	19.65	140	9.65	230	15.86
1910G	1.50	38.1	3.00	76.20	740	51.02	615	42.40	410	28.27	-	-	285	19.65	140	9.65	230	15.86
1912G	1.50	38.1	3.00	76.20	1480	102.04	1235	85.15	825	56.88	-	-	285	19.65	140	9.65	230	15.86
1914G	1.50	38.1	3.00	76.20	2220	153.06	1845	127.21	1235	85.15	-	-	740	51.02	140	9.65	470	32.41
1916G	2.00	50.8	3.00	76.20	3705	255.45	3080	212.36	2060	142.03	-	-	740	51.02	140	9.65	470	32.41
1918G	2.00	50.8	3.00	76.20	6000	413.69	3705	255.45	3430	236.49	-	-	740	51.02	140	9.65	470	32.41
1920G	1.50	38.1	3.00	76.20	-	-	-	-	510	35.16	215	14.82	285	19.65	140	9.65	230	15.86
1922G	1.50	38.1	3.00	76.20	-	-	-	-	1015	69.98	430	29.65	285	19.65	140	9.65	230	15.86
1924G	1.50	38.1	3.00	76.20	-	-	-	-	1525	105.15	650	44.82	740	51.02	140	9.65	500	34.47
1926G	2.00	50.8	3.00	76.20	-	-	-	-	2540	175.13	1080	74.46	740	51.02	140	9.65	500	34.47
1928G	2.00	50.8	3.00	76.20	-	-	-	-	3705	255.45	1800	124.11	740	51.02	140	9.65	500	34.47

Pressure Temperature Ratings for G Orifice

ASME Ratings (G Orifice - 0.128 in² (0.825 cm²) Actual)													Backpressure Ratings @ 100°F (37.8°C)					
Valve Type	Connection				Standard Material of Construction								Conventional		Bellows			
	Inlet		Outlet		-20 to 100°F (-28.9 to 37.8°C)		450°F (232.2°C)		800°F (426.7°C)		1000°F (537.8°C)				LP		HP	
	in.	mm	in.	mm	psig	barg	psig	barg	psig	barg	psig	barg	psig	barg	psig	barg	psig	barg
1905G	1.50	38.1	3.00	76.20	290	19.99	185	12.76	80	5.52	-	-	290	19.99	140	9.65	290	19.99
1906G	1.50	38.1	3.00	76.20	290	19.99	290	19.99	290	19.99	-	-	290	19.99	140	9.65	290	19.99
1910G	1.50	38.1	3.00	76.20	750	51.71	685	47.23	410	28.27	-	-	290	19.99	140	9.65	290	19.99
1912G	1.50	38.1	3.00	76.20	1500	103.42	1368	94.32	825	56.88	-	-	290	19.99	140	9.65	290	19.99
1914G	1.50	38.1	3.00	76.20	2250	155.13	2053	141.55	1235	85.15	-	-	750	51.71	140	9.65	750	51.71
1916G	2.00	50.8	3.00	76.20	3750	258.55	3423	236.01	2055	141.69	-	-	750	51.71	140	9.65	750	51.71
1918G	2.00	50.8	3.00	76.20	5000	344.74	5000	344.74	3430	236.49	-	-	750	51.71	140	9.65	750	51.71
1920G	1.50	38.1	3.00	76.20	-	-	-	-	510	35.16	215	14.82	290	19.99	140	9.65	290	19.99
1922G	1.50	38.1	3.00	76.20	-	-	-	-	1015	69.98	430	29.65	290	19.99	140	9.65	290	19.99
1924G	1.50	38.1	3.00	76.20	-	-	-	-	1525	105.15	650	44.82	750	51.71	140	9.65	750	51.71
1926G	2.00	50.8	3.00	76.20	-	-	-	-	2540	175.13	1080	74.46	750	51.71	140	9.65	750	51.71
1928G	2.00	50.8	3.00	76.20	-	-	-	-	4230	291.65	1800	124.11	750	51.71	140	9.65	750	51.71

Pressure / Temperature (Contd.)

Selection Chart for Vapors, Gases and Liquids

1900 and 1900-30 Series, G Orifice - API Area: 0.503 Sq. in.

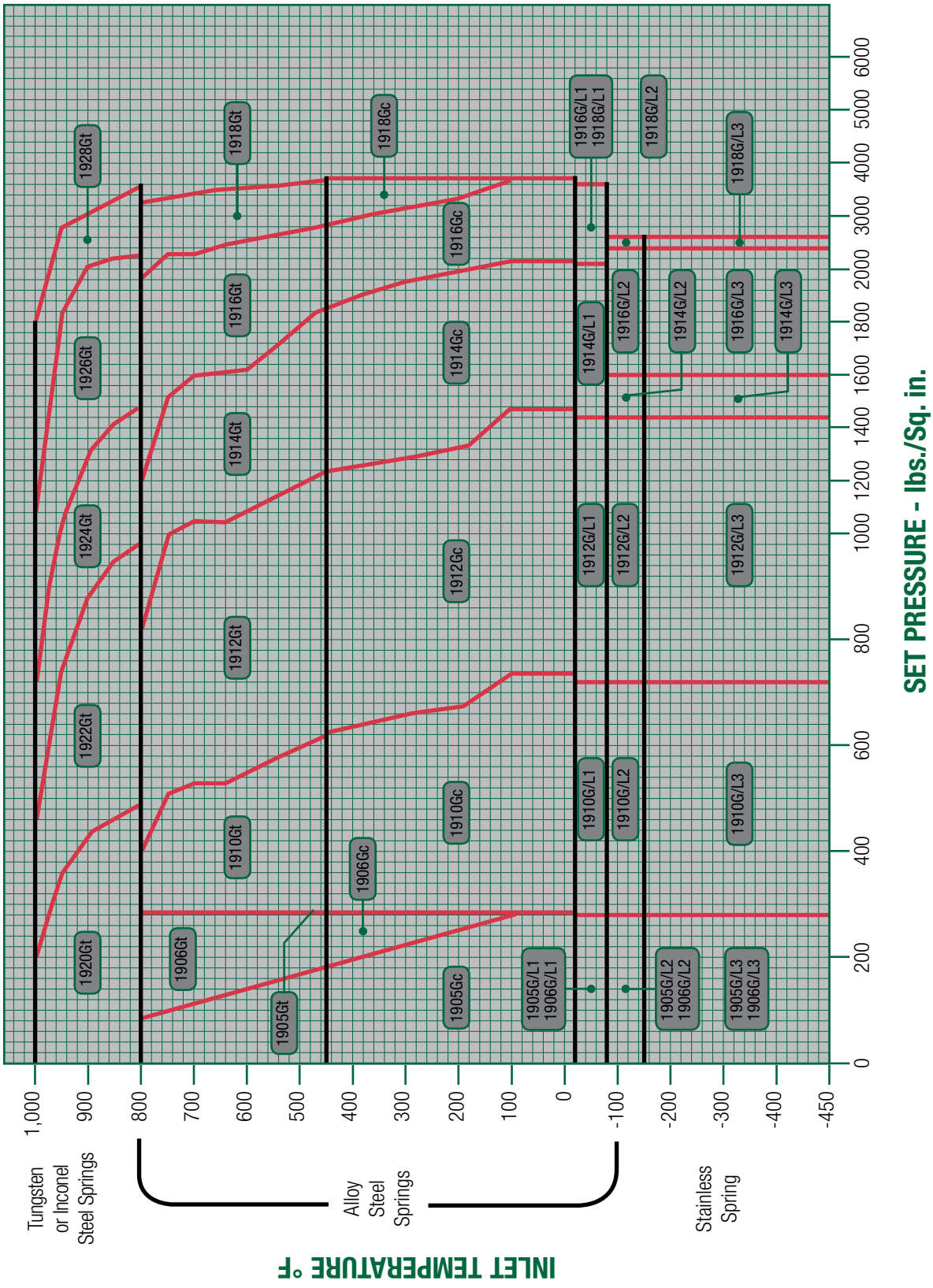

Pressure / Temperature (Contd.)

Pressure Temperature Ratings for H Orifice

API Ratings (H Orifice - 0.785 in² (5.065 cm²))													Backpressure Ratings @ 100°F (37.8°C)					
Valve Type	Connection				Standard Material of Construction								Conventional		Bellows			
	Inlet		Outlet		-20 to 100°F (-28.9 to 37.8°C)		450°F (232.2°C)		800°F (426.7°C)		1000°F (537.8°C)				LP		HP	
	in.	mm	in.	mm	psig	barg	psig	barg	psig	barg	psig	barg	psig	barg	psig	barg	psig	barg
1905H	1.50	38.1	3.00	76.20	285	19.65	185	12.76	80	5.52	-	-	285	19.65	104	7.17	230	15.86
1906H	1.50	38.1	3.00	76.20	285	19.65	285	19.65	285	19.65	-	-	285	19.65	104	7.17	230	15.86
1910H	2.00	50.8	3.00	76.20	740	51.02	615	42.40	410	28.27	-	-	285	19.65	104	7.17	230	15.86
1912H	2.00	50.8	3.00	76.20	1480	102.04	1235	85.15	825	56.88	-	-	285	19.65	104	7.17	230	15.86
1914H	2.00	50.8	3.00	76.20	2220	153.06	1845	127.21	1235	85.15	-	-	285	19.65	104	7.17	230	15.86
1916H	2.00	50.8	3.00	76.20	2750	189.61	2750	189.61	2060	142.03	-	-	740	51.02	104	7.17	415	28.61
1920H	2.00	50.8	3.00	76.20	-	-	-	-	510	35.16	215	14.82	285	19.65	104	7.17	230	15.86
1922H	2.00	50.8	3.00	76.20	-	-	-	-	1015	69.98	430	29.65	285	19.65	104	7.17	230	15.86
1924H	2.00	50.8	3.00	76.20	-	-	-	-	1225	84.46	650	44.82	285	19.65	104	7.17	230	15.86
1926H	2.00	50.8	3.00	76.20	-	-	-	-	2540	175.13	1080	74.46	740	51.02	104	7.17	415	28.61

Pressure Temperature Ratings for H Orifice

ASME Ratings (H Orifice - 0.913 in² (5.888 cm²) Actual)													Backpressure Ratings @ 100°F (37.8°C)					
Valve Type	Connection				Standard Material of Construction								Conventional		Bellows			
	Inlet		Outlet		-20 to 100°F (-28.9 to 37.8°C)		450°F (232.2°C)		800°F (426.7°C)		1000°F (537.8°C)				LP		HP	
	in.	mm	in.	mm	psig	barg	psig	barg	psig	barg	psig	barg	psig	barg	psig	barg	psig	barg
1905H	1.50	38.1	3.00	76.20	185	12.76	185	12.76	80	5.52	-	-	290	19.99	104	7.17	290	19.99
1906H	1.50	38.1	3.00	76.20	290	19.99	290	19.99	290	19.99	-	-	290	19.99	104	7.17	290	19.99
1910H	2.00	50.8	3.00	76.20	685	47.23	685	47.23	410	28.27	-	-	290	19.99	104	7.17	290	19.99
1912H	2.00	50.8	3.00	76.20	1368	94.32	1368	94.32	825	56.88	-	-	290	19.99	104	7.17	290	19.99
1914H	2.00	50.8	3.00	76.20	2053	141.55	2053	141.55	1235	85.15	-	-	290	19.99	104	7.17	750	51.71
1916H	2.00	50.8	3.00	76.20	3300	227.53	3300	227.53	2055	141.69	-	-	750	51.71	104	7.17	750	51.71
1920H	2.00	50.8	3.00	76.20	-	-	-	-	510	35.16	215	14.82	290	19.99	104	7.17	750	51.71
1922H	2.00	50.8	3.00	76.20	-	-	-	-	1015	69.98	430	29.65	290	19.99	104	7.17	290	19.99
1924H	2.00	50.8	3.00	76.20	-	-	-	-	1525	105.15	650	44.82	290	19.99	104	7.17	290	19.99
1926H	2.00	50.8	3.00	76.20	-	-	-	-	2540	175.13	1080	74.46	750	51.71	104	7.17	750	51.71

Pressure / Temperature (Contd.)

Selection Chart for Vapors, Gases and Liquids

1900 and 1900-30 Series, H Orifice - API Area: 0.785 Sq. in.

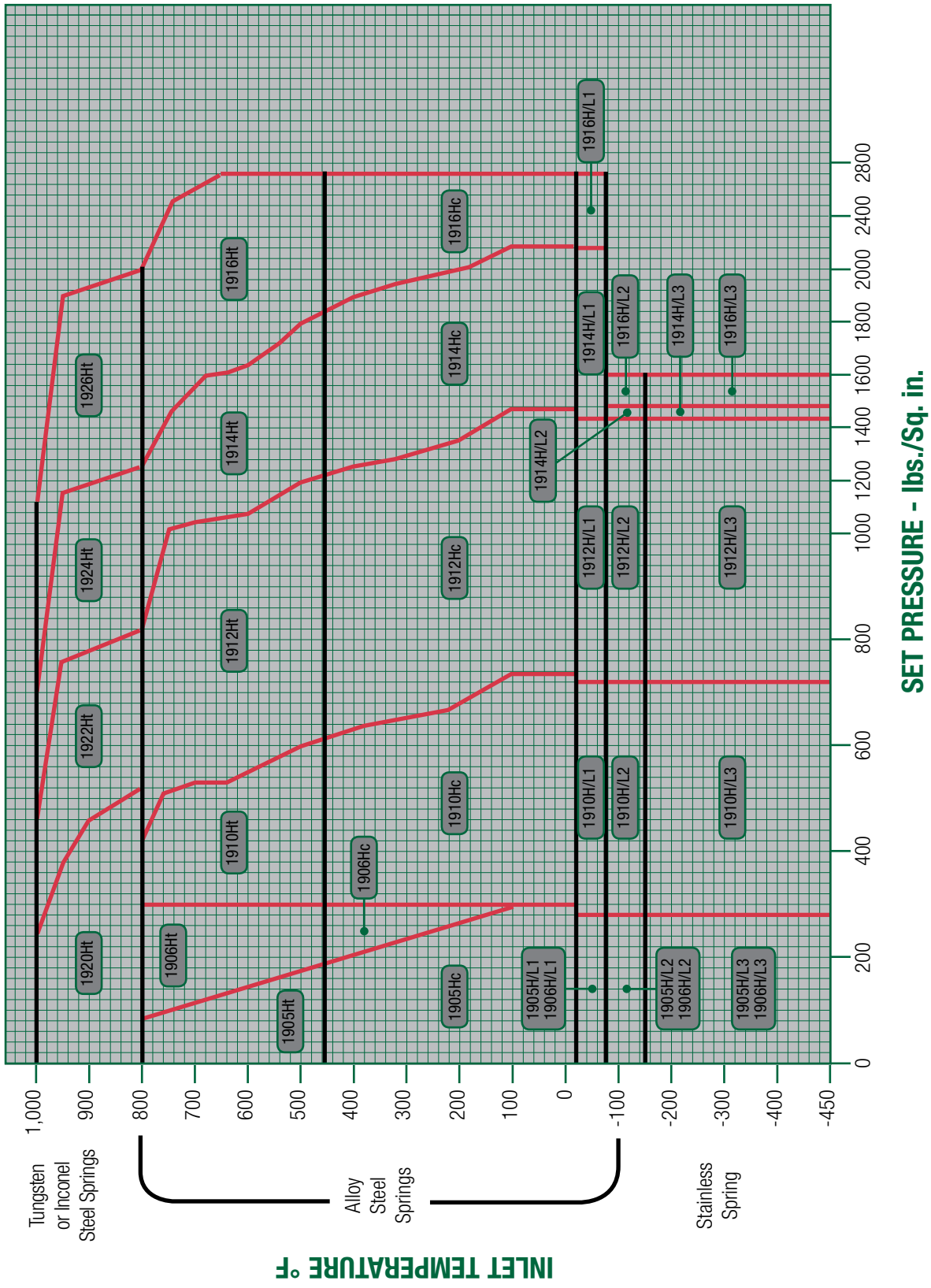

Pressure / Temperature (Contd.)

Pressure Temperature Ratings for J Orifice

API Ratings (J Orifice - 1.287 in² (8.303 cm²))													Backpressure Ratings @ 100°F (37.8°C)					
Valve Type	Connection				Standard Material of Construction								Conventional		Bellows			
	Inlet		Outlet		-20 to 100°F (-28.9 to 37.8°C)		450°F (232.2°C)		800°F (426.7°C)		1000°F (537.8°C)				LP		HP	
	in.	mm	in.	mm	psig	barg	psig	barg	psig	barg	psig	barg	psig	barg	psig	barg	psig	barg
1905J	2.00	50.8	3.00	76.20	285	19.65	185	12.76	80	5.52	-	-	285	19.65	89	6.14	230	15.86
1906J	2.00	50.8	3.00	76.20	285	19.65	285	19.65	285	19.65	-	-	285	19.65	89	6.14	230	15.86
1910J	3.00	76.2	4.00	101.60	740	51.02	615	42.40	410	28.27	-	-	285	19.65	89	6.14	230	15.86
1912J	3.00	76.2	4.00	101.60	1480	102.04	1235	85.15	825	56.88	-	-	285	19.65	89	6.14	230	15.86
1914J	3.00	76.2	4.00	101.60	2220	153.06	1845	127.21	1235	85.15	-	-	285	19.65	89	6.14	230	15.86
1916J	3.00	76.2	4.00	101.60	2700	186.16	2700	186.16	2060	142.03	-	-	600	41.37	89	6.14	230	15.86
1920J	3.00	76.2	4.00	101.60	-	-	-	-	510	35.16	215	14.82	285	19.65	89	6.14	230	15.86
1922J	3.00	76.2	4.00	101.60	-	-	-	-	1015	69.98	430	29.65	285	19.65	89	6.14	230	15.86
1924J	3.00	76.2	4.00	101.60	-	-	-	-	1525	105.15	650	44.82	285	19.65	89	6.14	230	15.86
1926J	3.00	76.2	4.00	101.60	-	-	-	-	2540	175.13	1080	74.46	600	41.37	89	6.14	230	15.86

Pressure Temperature Ratings for J Orifice

ASME Ratings (J Orifice - 1.496 in² (9.652 cm²) Actual)													Backpressure Ratings @ 100°F (37.8°C)					
Valve Type	Connection				Standard Material of Construction								Conventional		Bellows			
	Inlet		Outlet		-20 to 100°F (-28.9 to 37.8°C)		450°F (232.2°C)		800°F (426.7°C)		1000°F (537.8°C)				LP		HP	
	in.	mm	in.	mm	psig	barg	psig	barg	psig	barg	psig	barg	psig	barg	psig	barg	psig	barg
1905J	2.00	50.8	3.00	76.20	185	12.76	185	12.76	80	5.52	-	-	290	19.99	89	6.14	290	19.99
1906J	2.00	50.8	3.00	76.20	290	19.99	290	19.99	290	19.99	-	-	290	19.99	89	6.14	290	19.99
1910J	3.00	76.2	4.00	101.60	685	47.23	685	47.23	410	28.27	-	-	290	19.99	89	6.14	290	19.99
1912J	3.00	76.2	4.00	101.60	1368	94.32	1368	94.32	825	56.88	-	-	290	19.99	89	6.14	290	19.99
1914J	3.00	76.2	4.00	101.60	2053	141.55	2053	141.55	1235	85.15	-	-	290	19.99	89	6.14	290	19.99
1916J	3.00	76.2	4.00	101.60	3100	213.74	3100	213.74	2055	141.69	-	-	750	51.71	89	6.14	635	43.78
1920J	3.00	76.2	4.00	101.60	-	-	-	-	510	35.16	215	14.82	290	19.99	89	6.14	290	19.99
1922J	3.00	76.2	4.00	101.60	-	-	-	-	1015	69.98	430	29.65	290	19.99	89	6.14	290	19.99
1924J	3.00	76.2	4.00	101.60	-	-	-	-	1525	105.15	650	44.82	290	19.99	89	6.14	290	19.99
1926J	3.00	76.2	4.00	101.60	-	-	-	-	2540	175.13	1080	74.46	750	51.71	89	6.14	635	43.78

Pressure / Temperature (Contd.)

Selection Chart for Vapors, Gases and Liquids

1900 and 1900-30 Series, J Orifice - API Area: 1.287 Sq. in.

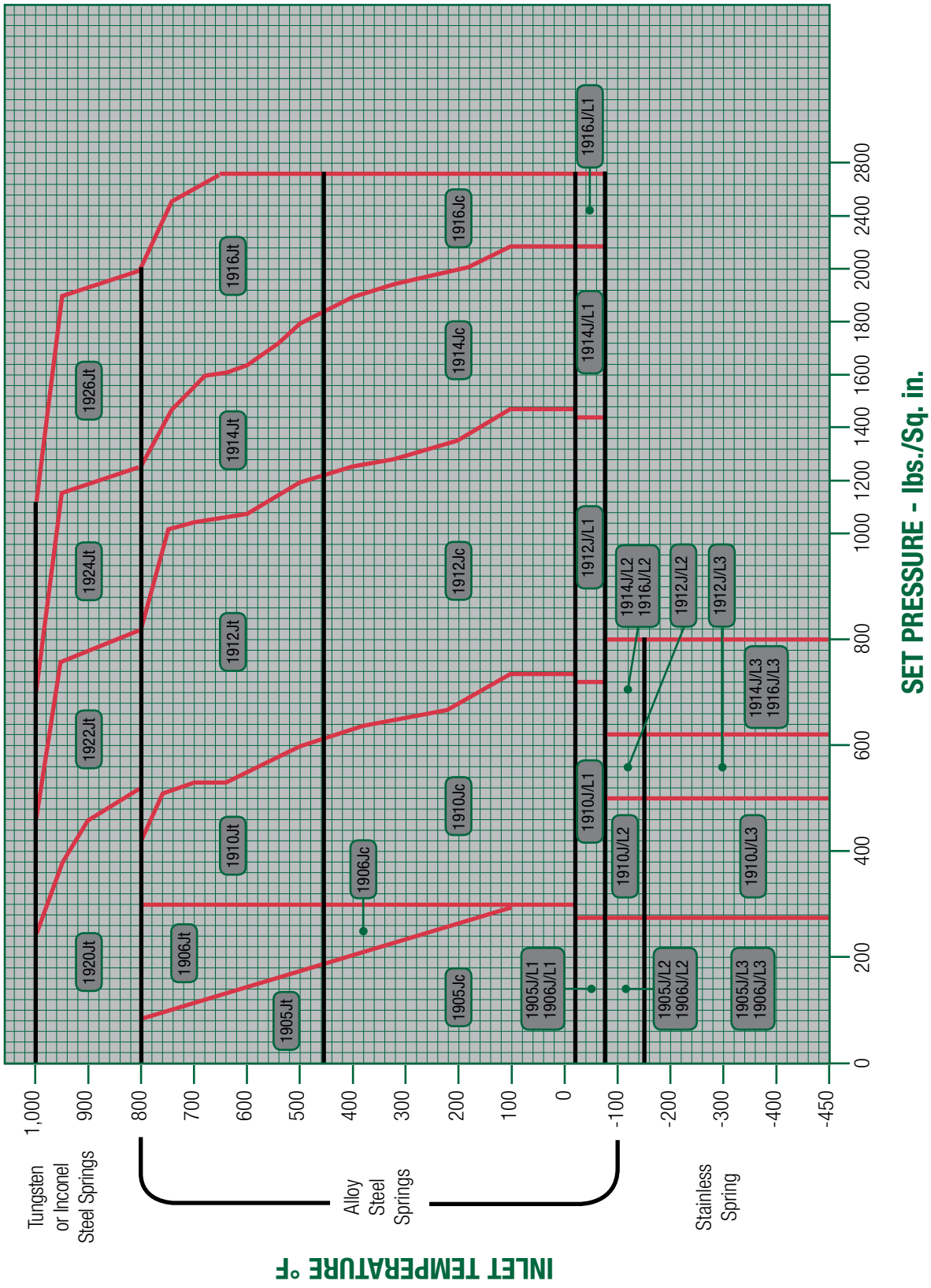

Pressure / Temperature (Contd.)

Pressure Temperature Ratings for K Orifice

API Ratings (K Orifice - 1.838 in² (11.858 cm²))													Backpressure Ratings @ 100°F (37.8°C)					
Valve Type	Connection				Standard Material of Construction								Conventional		Bellows			
	Inlet		Outlet		-20 to 100°F (-28.9 to 37.8°C)		450°F (232.2°C)		800°F (426.7°C)		1000°F (537.8°C)				LP		HP	
	in.	mm	in.	mm	psig	barg	psig	barg	psig	barg	psig	barg	psig	barg	psig	barg	psig	barg
1905K	3.00	76.2	4.00	101.60	285	19.65	185	12.76	80	5.52	-	-	285	19.65	65	4.48	150	10.34
1906K	3.00	76.2	4.00	101.60	285	19.65	285	19.65	285	19.65	-	-	285	19.65	65	4.48	150	10.34
1910K	3.00	76.2	4.00	101.60	740	51.02	615	42.40	410	28.27	-	-	285	19.65	65	4.48	150	10.34
1912K	3.00	76.2	4.00	101.60	1480	102.04	1235	85.15	825	56.88	-	-	285	19.65	65	4.48	200	13.79
1914K	3.00	76.2	6.00	152.40	2220	153.06	1845	127.21	1235	85.15	-	-	285	19.65	65	4.48	200	13.79
1916K	3.00	76.2	6.00	152.40	2220	153.06	2220	153.06	2060	142.03	-	-	600	41.37	65	4.48	200	13.79
1920K	3.00	76.2	4.00	101.60	-	-	-	-	510	35.16	215	14.82	285	19.65	65	4.48	230	15.86
1922K	3.00	76.2	4.00	101.60	-	-	-	-	1015	69.98	430	29.65	285	19.65	65	4.48	230	15.86
1924K	3.00	76.2	6.00	152.40	-	-	-	-	1525	105.15	650	44.82	285	19.65	65	4.48	230	15.86
1926K	3.00	76.2	6.00	152.40	-	-	-	-	2220	153.06	1080	74.46	600	41.37	65	4.48	230	15.86

Pressure Temperature Ratings for K Orifice

ASME Ratings (K Orifice - 2.138 in² (13.794 cm²) Actual)													Backpressure Ratings @ 100°F (37.8°C)					
Valve Type	Connection				Standard Material of Construction								Conventional		Bellows			
	Inlet		Outlet		-20 to 100°F (-28.9 to 37.8°C)		450°F (232.2°C)		800°F (426.7°C)		1000°F (537.8°C)				LP		HP	
	in.	mm	in.	mm	psig	barg	psig	barg	psig	barg	psig	barg	psig	barg	psig	barg	psig	barg
1905K	3.00	76.2	4.00	101.60	185	12.76	185	12.76	80	5.52	-	-	290	19.99	89	6.14	290	19.99
1906K	3.00	76.2	4.00	101.60	290	19.99	290	19.99	290	19.99	-	-	290	19.99	89	6.14	290	19.99
1910K	3.00	76.2	4.00	101.60	685	47.23	685	47.23	410	28.27	-	-	290	19.99	89	6.14	290	19.99
1912K	3.00	76.2	4.00	101.60	1368	94.32	1368	94.32	825	56.88	-	-	290	19.99	89	6.14	290	19.99
1914K	3.00	76.2	6.00	152.40	2053	141.55	2053	141.55	1235	85.15	-	-	290	19.99	89	6.14	290	19.99
1916K	3.00	76.2	6.00	152.40	3000	206.84	3000	206.84	2055	141.69	-	-	750	51.71	89	6.14	535	36.89
1920K	3.00	76.2	4.00	101.60	-	-	-	-	510	35.16	215	14.82	290	19.99	89	6.14	290	19.99
1922K	3.00	76.2	4.00	101.60	-	-	-	-	1015	69.98	430	29.65	290	19.99	89	6.14	290	19.99
1924K	3.00	76.2	6.00	152.40	-	-	-	-	1525	105.15	650	44.82	290	19.99	89	6.14	290	19.99
1926K	3.00	76.2	6.00	152.40	-	-	-	-	2540	175.13	1080	74.46	750	51.71	89	6.14	535	36.89

Pressure / Temperature (Contd.)

Selection Chart for Vapors, Gases and Liquids

1900 and 1900-30 Series, K Orifice - API Area: 1.838 Sq. in.

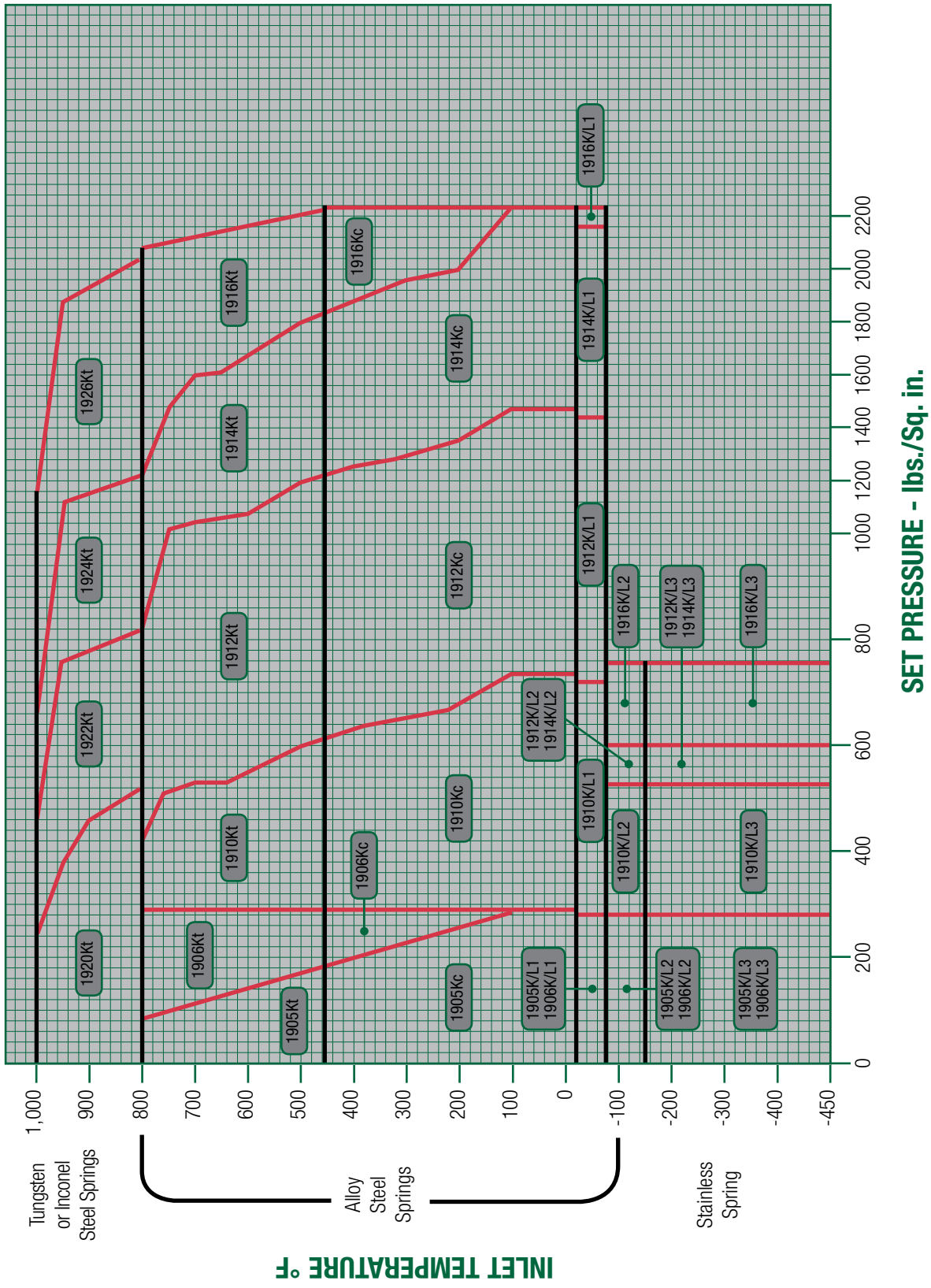

Pressure / Temperature (Contd.)

Pressure Temperature Ratings for L Orifice

API Ratings (L Orifice - 2.853 in² (18.406 cm²))													Backpressure Ratings @ 100°F (37.8°C)					
Valve Type	Connection				Standard Material of Construction								Conventional		Bellows			
	Inlet		Outlet		-20 to 100°F (-28.9 to 37.8°C)		450°F (232.2°C)		800°F (426.7°C)		1000°F (537.8°C)				LP		HP	
	in.	mm	in.	mm	psig	barg	psig	barg	psig	barg	psig	barg	psig	barg	psig	barg	psig	barg
1905L	3.00	76.2	4.00	101.60	285	19.65	185	12.76	80	5.52	-	-	285	19.65	53	3.65	100	6.89
1906L	3.00	76.2	4.00	101.60	285	19.65	285	19.65	285	19.65	-	-	285	19.65	53	3.65	100	6.89
1910L	4.00	101.6	6.00	152.40	740	51.02	615	42.40	410	28.27	-	-	285	19.65	53	3.65	170	11.72
1912L	4.00	101.6	6.00	152.40	1000	68.95	1000	68.95	825	56.88	-	-	285	19.65	53	3.65	170	11.72
1914L	4.00	101.6	6.00	152.40	1500	103.42	1500	103.42	1235	85.15	-	-	285	19.65	53	3.65	170	11.72
1916L	4.00	101.6	6.00	152.40	1500	103.42	1500	103.42	1500	103.42	-	-	285	19.65	53	3.65	170	11.72
1920L	4.00	101.6	6.00	152.40	-	-	-	-	510	35.16	215	14.82	285	19.65	53	3.65	170	11.72
1922L	4.00	101.6	6.00	152.40	-	-	-	-	1000	68.95	430	29.65	285	19.65	53	3.65	170	11.72
1924L	4.00	101.6	6.00	152.40	-	-	-	-	1500	103.42	650	44.82	285	19.65	53	3.65	170	11.72
1926L	4.00	101.6	6.00	152.40	-	-	-	-	1500	103.42	1080	74.46	600	41.37	53	3.65	170	11.72

Pressure Temperature Ratings for L Orifice

ASME Ratings (L Orifice - 3.317 in² (21.4 cm²) Actual)													Backpressure Ratings @ 100°F (37.8°C)					
Valve Type	Connection				Standard Material of Construction								Conventional		Bellows			
	Inlet		Outlet		-20 to 100°F (-28.9 to 37.8°C)		450°F (232.2°C)		800°F (426.7°C)		1000°F (537.8°C)				LP		HP	
	in.	mm	in.	mm	psig	barg	psig	barg	psig	barg	psig	barg	psig	barg	psig	barg	psig	barg
1905L	3.00	76.2	4.00	101.60	185	12.76	185	12.76	80	5.52	-	-	290	19.99	53	3.65	290	19.99
1906L	3.00	76.2	4.00	101.60	290	19.99	290	19.99	290	19.99	-	-	290	19.99	53	3.65	290	19.99
1910L	4.00	101.6	6.00	152.40	685	47.23	685	47.23	410	28.27	-	-	290	19.99	53	3.65	290	19.99
1912L	4.00	101.6	6.00	152.40	1368	94.32	1368	94.32	825	56.88	-	-	290	19.99	53	3.65	290	19.99
1914L	4.00	101.6	6.00	152.40	1900	131.00	2053	141.55	1235	85.15	-	-	290	19.99	53	3.65	290	19.99
1916L	4.00	101.6	6.00	152.40	2900	199.95	3000	206.84	2055	141.69	-	-	290	19.99	53	3.65	535	36.89
1920L	4.00	101.6	6.00	152.40	-	-	-	-	510	35.16	215	14.82	290	19.99	53	3.65	290	19.99
1922L	4.00	101.6	6.00	152.40	-	-	-	-	1015	69.98	430	29.65	290	19.99	53	3.65	290	19.99
1924L	4.00	101.6	6.00	152.40	-	-	-	-	1525	105.15	650	44.82	290	19.99	53	3.65	290	19.99
1926L	4.00	101.6	6.00	152.40	-	-	-	-	2540	175.13	1080	74.46	290	19.99	53	3.65	535	36.89

Pressure / Temperature (Contd.)

Selection Chart for Vapors, Gases and Liquids

1900 and 1900-30 Series, L Orifice - API Area: 2.853 Sq. in.

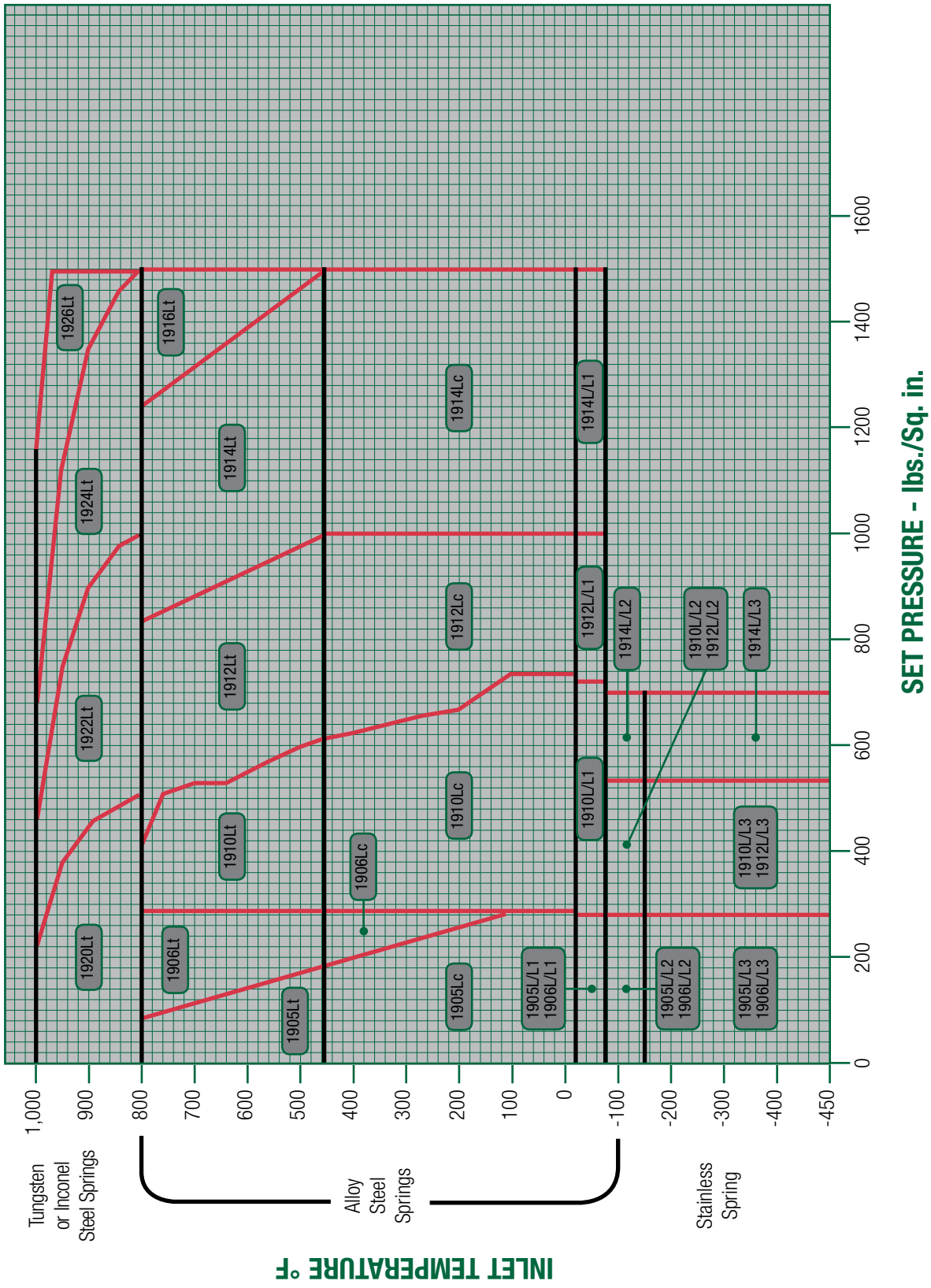

Pressure / Temperature (Contd.)

Pressure Temperature Ratings for M Orifice

API Ratings (M Orifice - 3.6 in² (23.226 cm²))													Backpressure Ratings @ 100°F (37.8°C)					
Valve Type	Connection				Standard Material of Construction								Conventional		Bellows			
	Inlet		Outlet		-20 to 100°F (-28.9 to 37.8°C)		450°F (232.2°C)		800°F (426.7°C)		1000°F (537.8°C)				LP		HP	
	in.	mm	in.	mm	psig	barg	psig	barg	psig	barg	psig	barg	psig	barg	psig	barg	psig	barg
1905M	4.00	101.6	6.00	152.40	285	19.65	185	12.76	80	5.52	-	-	285	19.65	66	4.55	80	5.52
1906M	4.00	101.6	6.00	152.40	285	19.65	285	19.65	285	19.65	-	-	285	19.65	66	4.55	80	5.52
1910M	4.00	101.6	6.00	152.40	740	51.02	615	42.40	410	28.27	-	-	285	19.65	66	4.55	160	11.03
1912M	4.00	101.6	6.00	152.40	1100	75.84	1100	75.84	825	56.88	-	-	285	19.65	66	4.55	160	11.03
1914M	4.00	101.6	6.00	152.40	1100	75.84	1100	75.84	1100	75.84	-	-	285	19.65	66	4.55	160	11.03
1920M	4.00	101.6	6.00	152.40	-	-	-	-	510	35.16	215	14.82	285	19.65	66	4.55	160	11.03
1922M	4.00	101.6	6.00	152.40	-	-	-	-	1000	68.95	430	29.65	285	19.65	66	4.55	160	11.03
1924M	4.00	101.6	6.00	152.40	-	-	-	-	1100	75.84	650	44.82	285	19.65	66	4.55	160	11.03

Pressure Temperature Ratings for M Orifice

ASME Ratings (M Orifice - 4.186 in² (27.006 cm²) Actual)													Backpressure Ratings @ 100°F (37.8°C)					
Valve Type	Connection				Standard Material of Construction								Conventional		Bellows			
	Inlet		Outlet		-20 to 100°F (-28.9 to 37.8°C)		450°F (232.2°C)		800°F (426.7°C)		1000°F (537.8°C)				LP		HP	
	in.	mm	in.	mm	psig	barg	psig	barg	psig	barg	psig	barg	psig	barg	psig	barg	psig	barg
1905M	4.00	101.6	6.00	152.40	290	19.99	185	12.76	80	5.52	-	-	290	19.99	66	4.55	290	19.99
1906M	4.00	101.6	6.00	152.40	290	19.99	290	19.99	290	19.99	-	-	290	19.99	66	4.55	290	19.99
1910M	4.00	101.6	6.00	152.40	750	51.71	685	47.23	410	28.27	-	-	290	19.99	66	4.55	290	19.99
1912M	4.00	101.6	6.00	152.40	1500	103.42	1368	94.32	825	56.88	-	-	290	19.99	66	4.55	290	19.99
1914M	4.00	101.6	6.00	152.40	1600	110.32	1600	110.32	1235	85.15	-	-	290	19.99	66	4.55	290	19.99
1920M	4.00	101.6	6.00	152.40	-	-	-	-	510	35.16	215	14.82	290	19.99	66	4.55	290	19.99
1922M	4.00	101.6	6.00	152.40	-	-	-	-	1015	69.98	430	29.65	290	19.99	66	4.55	290	19.99
1924M	4.00	101.6	6.00	152.40	-	-	-	-	1525	105.15	650	44.82	290	19.99	66	4.55	290	19.99

Pressure / Temperature (Contd.)

Selection Chart for Vapors, Gases and Liquids

1900 and 1900-30 Series, M Orifice - API Area: 3.60 Sq. in.

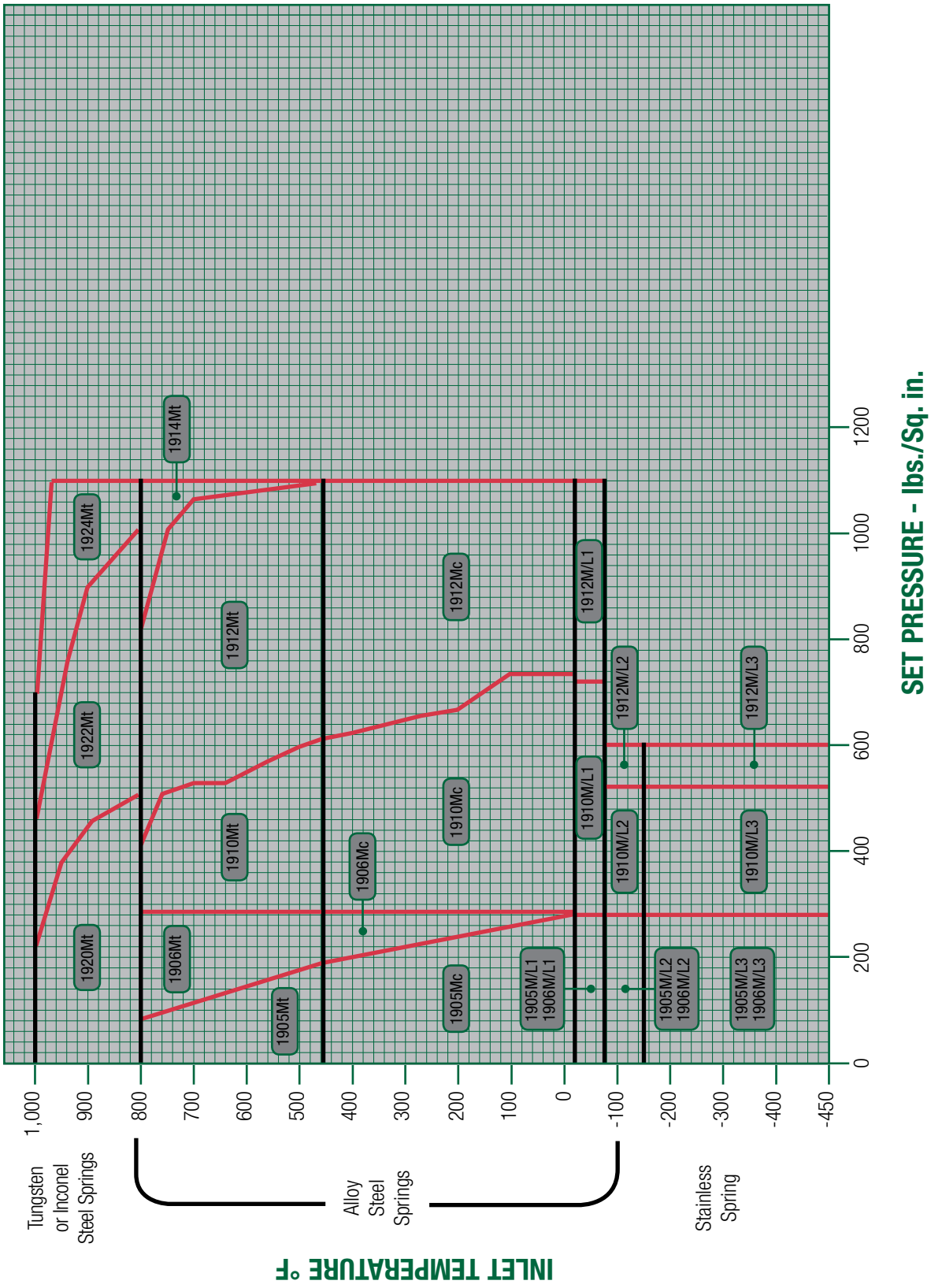

Pressure / Temperature (Contd.)

Pressure Temperature Ratings for N Orifice

API Ratings (N Orifice - 4.34 in² (28 cm²))													Backpressure Ratings @ 100°F (37.8°C)					
Valve Type	Connection				Standard Material of Construction								Conventional		Bellows			
	Inlet		Outlet		-20 to 100°F (-28.9 to 37.8°C)		450°F (232.2°C)		800°F (426.7°C)		1000°F (537.8°C)				LP		HP	
	in.	mm	in.	mm	psig	barg	psig	barg	psig	barg	psig	barg	psig	barg	psig	barg	psig	barg
1905N	4.00	101.6	6.00	152.40	285	19.65	185	12.76	80	5.52	-	-	285	19.65	73	5.03	80	5.52
1906N	4.00	101.6	6.00	152.40	285	19.65	285	19.65	285	19.65	-	-	285	19.65	73	5.03	80	5.52
1910N	4.00	101.6	6.00	152.40	740	51.02	615	42.40	410	28.27	-	-	285	19.65	73	5.03	160	11.03
1912N	4.00	101.6	6.00	152.40	1000	68.95	1000	68.95	825	56.88	-	-	285	19.65	73	5.03	160	11.03
1914N	4.00	101.6	6.00	152.40	1000	68.95	1000	68.95	1000	68.95	-	-	285	19.65	73	5.03	160	11.03
1920N	4.00	101.6	6.00	152.40	-	-	-	-	510	35.16	215	14.82	285	19.65	73	5.03	160	11.03
1922N	4.00	101.6	6.00	152.40	-	-	-	-	1000	68.95	430	29.65	285	19.65	73	5.03	160	11.03
1924N	4.00	101.6	6.00	152.40	-	-	-	-	1000	68.95	650	44.82	285	19.65	73	5.03	160	11.03

Pressure Temperature Ratings for N Orifice

ASME Ratings (N Orifice - 5.047 in² (32.561 cm²) Actual)													Backpressure Ratings @ 100°F (37.8°C)					
Valve Type	Connection				Standard Material of Construction								Conventional		Bellows			
	Inlet		Outlet		-20 to 100°F (-28.9 to 37.8°C)		450°F (232.2°C)		800°F (426.7°C)		1000°F (537.8°C)				LP		HP	
	in.	mm	in.	mm	psig	barg	psig	barg	psig	barg	psig	barg	psig	barg	psig	barg	psig	barg
1905N	4.00	101.6	6.00	152.40	290	19.99	185	12.76	80	5.52	-	-	290	19.99	73	5.03	290	19.99
1906N	4.00	101.6	6.00	152.40	290	19.99	290	19.99	290	19.99	-	-	290	19.99	73	5.03	290	19.99
1910N	4.00	101.6	6.00	152.40	750	51.71	685	47.23	410	28.27	-	-	290	19.99	73	5.03	290	19.99
1912N	4.00	101.6	6.00	152.40	1500	103.42	1368	94.32	825	56.88	-	-	290	19.99	73	5.03	290	19.99
1914N	4.00	101.6	6.00	152.40	1600	110.32	1600	110.32	1235	85.15	-	-	290	19.99	73	5.03	290	19.99
1920N	4.00	101.6	6.00	152.40	-	-	-	-	510	35.16	215	14.82	290	19.99	73	5.03	290	19.99
1922N	4.00	101.6	6.00	152.40	-	-	-	-	1015	69.98	430	29.65	290	19.99	73	5.03	290	19.99
1924N	4.00	101.6	6.00	152.40	-	-	-	-	1525	105.15	650	44.82	290	19.99	73	5.03	290	19.99

Pressure / Temperature (Contd.)

Selection Chart for Vapors, Gases and Liquids

1900 and 1900-30 Series, N Orifice - API Area: 4.34 Sq. in.

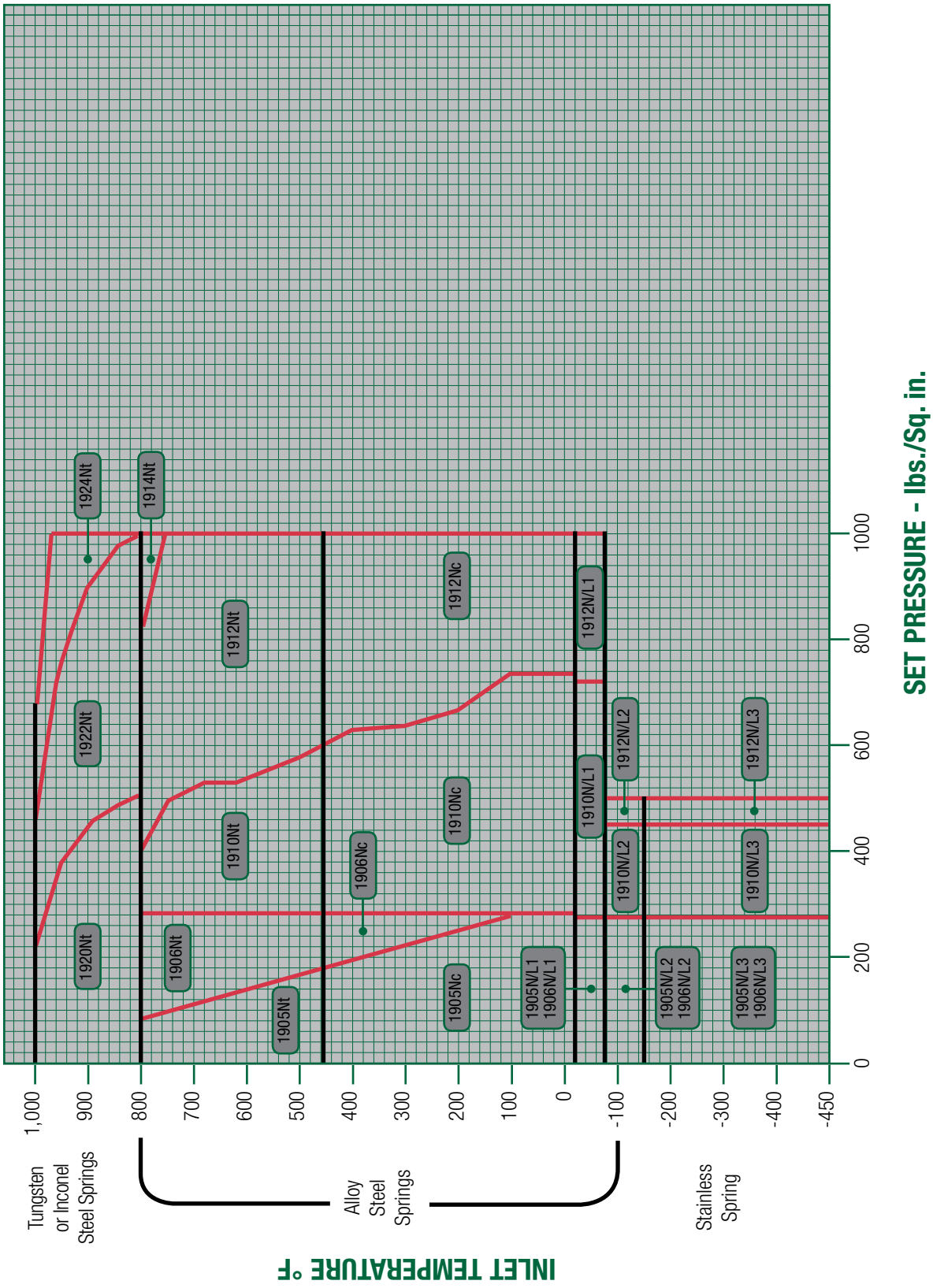

Pressure / Temperature (Contd.)

Pressure Temperature Ratings for P Orifice

API Ratings (P Orifice - 6.38 in² (41.161 cm²))													Backpressure Ratings @ 100°F (37.8°C)					
Valve Type	Connection				Standard Material of Construction								Conventional		Bellows			
	Inlet		Outlet		-20 to 100°F (-28.9 to 37.8°C)		450°F (232.2°C)		800°F (426.7°C)		1000°F (537.8°C)				LP		HP	
	in.	mm	in.	mm	psig	barg	psig	barg	psig	barg	psig	barg	psig	barg	psig	barg	psig	barg
1905P	4.00	101.6	6.00	152.40	285	19.65	185	12.76	80	5.52	-	-	285	19.65	56	3.86	80	5.52
1906P	4.00	101.6	6.00	152.40	285	19.65	285	19.65	285	19.65	-	-	285	19.65	56	3.86	80	5.52
1910P	4.00	101.6	6.00	152.40	525	36.20	525	36.20	410	28.27	-	-	285	19.65	56	3.86	150	10.34
1912P	4.00	101.6	6.00	152.40	1000	68.95	1000	68.95	825	56.88	-	-	285	19.65	56	3.86	150	10.34
1914P	4.00	101.6	6.00	152.40	1000	68.95	1000	68.95	1000	68.95	-	-	285	19.65	56	3.86	150	10.34
1920P	4.00	101.6	6.00	152.40	-	-	-	-	510	35.16	215	14.82	285	19.65	56	3.86	160	11.03
1923P	4.00	101.6	6.00	152.40	-	-	-	-	1000	68.95	430	29.65	285	19.65	56	3.86	160	11.03
1924P	4.00	101.6	6.00	152.40	-	-	-	-	1000	68.95	650	44.82	285	19.65	56	3.86	160	11.03

Pressure Temperature Ratings for P Orifice

ASME Ratings (P Orifice - 7.417 in² (47.852 cm²) Actual)													Backpressure Ratings @ 100°F (37.8°C)					
Valve Type	Connection				Standard Material of Construction								Conventional		Bellows			
	Inlet		Outlet		-20 to 100°F (-28.9 to 37.8°C)		450°F (232.2°C)		800°F (426.7°C)		1000°F (537.8°C)				LP		HP	
	in.	mm	in.	mm	psig	barg	psig	barg	psig	barg	psig	barg	psig	barg	psig	barg	psig	barg
1905P	4.00	101.6	6.00	152.40	290	19.99	185	12.76	80	5.52	-	-	290	19.99	56	3.86	290	19.99
1906P	4.00	101.6	6.00	152.40	290	19.99	290	19.99	290	19.99	-	-	290	19.99	56	3.86	290	19.99
1910P	4.00	101.6	6.00	152.40	750	51.71	685	47.23	410	28.27	-	-	290	19.99	56	3.86	290	19.99
1912P	4.00	101.6	6.00	152.40	1500	103.42	1368	94.32	825	56.88	-	-	290	19.99	56	3.86	290	19.99
1914P	4.00	101.6	6.00	152.40	1700	117.21	1700	117.21	1235	85.15	-	-	290	19.99	56	3.86	290	19.99
1920P	4.00	101.6	6.00	152.40	-	-	-	-	510	35.16	215	14.82	290	19.99	56	3.86	290	19.99
1923P	4.00	101.6	6.00	152.40	-	-	-	-	1015	69.98	430	29.65	290	19.99	56	3.86	290	19.99
1924P	4.00	101.6	6.00	152.40	-	-	-	-	1525	105.15	650	44.82	290	19.99	56	3.86	290	19.99

Pressure / Temperature (Contd.)

Selection Chart for Vapors, Gases and Liquids

1900 and 1900-30 Series, P Orifice - API Area: 6.38 Sq. in.

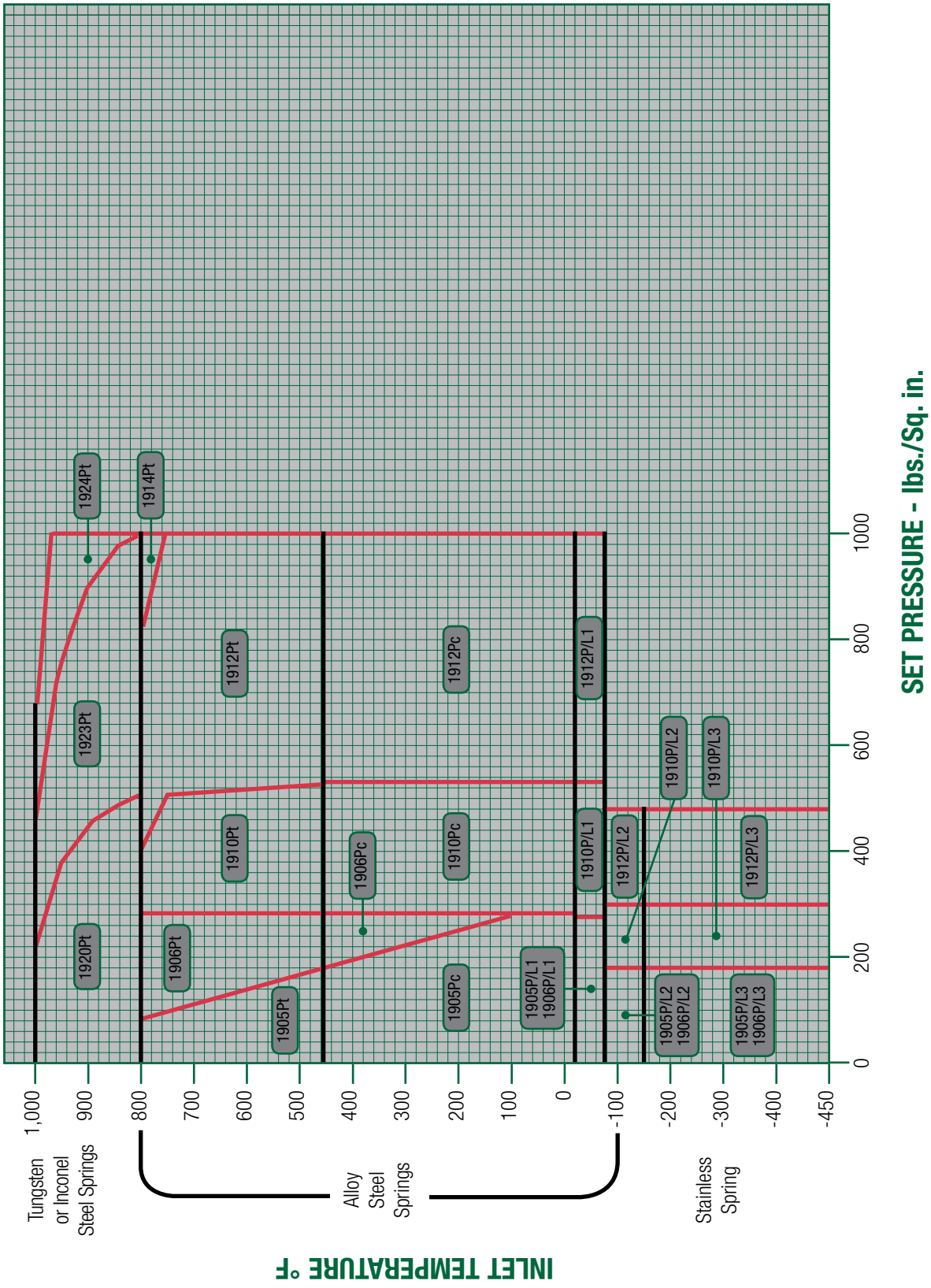

Pressure / Temperature (Contd.)

Pressure Temperature Ratings for Q Orifice

API Ratings (Q Orifice - 11.05 in² (71.29 cm²))													Backpressure Ratings @ 100°F (37.8°C)					
Valve Type	Connection				Standard Material of Construction								Conventional		Bellows			
	Inlet		Outlet		-20 to 100°F (-28.9 to 37.8°C)		450°F (232.2°C)		800°F (426.7°C)		1000°F (537.8°C)				LP		HP	
	in.	mm	in.	mm	psig	barg	psig	barg	psig	barg	psig	barg	psig	barg	psig	barg	psig	barg
1905Q	6.00	152.4	8.00	203.20	165	11.38	165	11.38	80	5.52	-	-	285	19.65	56	3.86	80	5.52
1906Q	6.00	152.4	8.00	203.20	165	11.38	165	11.38	165	11.38	-	-	285	19.65	56	3.86	80	5.52
1910Q	6.00	152.4	8.00	203.20	300	20.68	300	20.68	300	20.68	-	-	285	19.65	56	3.86	150	10.34
1912Q	6.00	152.4	8.00	203.20	600	41.37	600	41.37	600	41.37	-	-	285	19.65	56	3.86	150	10.34
1920Q	6.00	152.4	8.00	203.20	-	-	-	-	165	11.38	165	11.38	285	19.65	56	3.86	150	10.34
1922Q	6.00	152.4	8.00	203.20	-	-	-	-	600	41.37	430	29.65	285	19.65	56	3.86	160	11.03

Pressure Temperature Ratings for Q Orifice

ASME Ratings (Q Orifice - 12.85 in² (82.903 cm²) Actual)													Backpressure Ratings @ 100°F (37.8°C)					
Valve Type	Connection				Standard Material of Construction								Conventional		Bellows			
	Inlet		Outlet		-20 to 100°F (-28.9 to 37.8°C)		450°F (232.2°C)		800°F (426.7°C)		1000°F (537.8°C)				LP		HP	
	in.	mm	in.	mm	psig	barg	psig	barg	psig	barg	psig	barg	psig	barg	psig	barg	psig	barg
1905Q	6.00	152.4	8.00	203.20	290	19.99	185	12.76	80	5.52	-	-	290	19.99	52	3.59	205	14.13
1906Q	6.00	152.4	8.00	203.20	290	19.99	290	19.99	290	19.99	-	-	290	19.99	52	3.59	205	14.13
1910Q	6.00	152.4	8.00	203.20	650	44.82	650	44.82	410	28.27	-	-	290	19.99	52	3.59	205	14.13
1912Q	6.00	152.4	8.00	203.20	900	62.05	900	62.05	825	56.88	-	-	290	19.99	52	3.59	205	14.13
1920Q	6.00	152.4	8.00	203.20	-	-	-	-	510	35.16	215	14.82	290	19.99	52	3.59	205	14.13
1922Q	6.00	152.4	8.00	203.20	-	-	-	-	900	62.05	430	29.65	290	19.99	52	3.59	205	14.13

Pressure / Temperature (Contd.)

Selection Chart for Vapors, Gases and Liquids

1900 and 1900-30 Series, Q Orifice - API Area: 11.05 Sq. in.

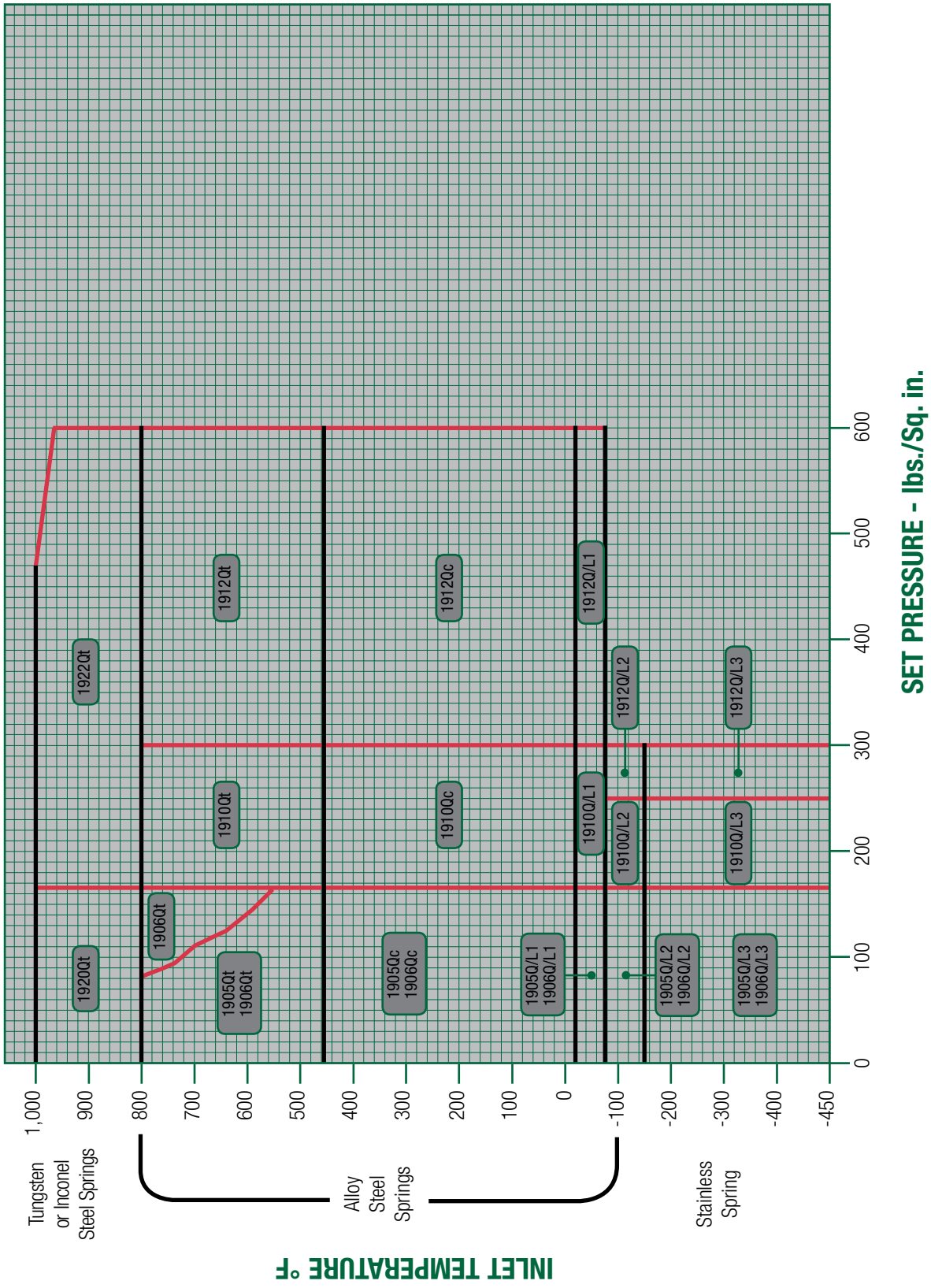

Pressure / Temperature (Contd.)

Pressure Temperature Ratings for R Orifice

API Ratings (R Orifice - 16 in² (103.226 cm²))													Backpressure Ratings @ 100°F (37.8°C)					
Valve Type	Connection				Standard Material of Construction								Conventional		Bellows			
	Inlet		Outlet		-20 to 100°F (-28.9 to 37.8°C)		450°F (232.2°C)		800°F (426.7°C)		1000°F (537.8°C)				LP		HP	
	in.	mm	in.	mm	psig	barg	psig	barg	psig	barg	psig	barg	psig	barg	psig	barg	psig	barg
1905R	6.00	152.4	8.00	203.20	100	6.89	100	6.89	80	5.52	-	-	60	4.14	52	3.59	60	4.14
1906R	6.00	152.4	8.00	203.20	100	6.89	100	6.89	100	6.89	-	-	60	4.14	52	3.59	60	4.14
1910R	6.00	152.4	10.00	254.00	230	15.86	230	15.86	230	15.86	-	-	100	6.89	52	3.59	100	6.89
1912R	6.00	152.4	10.00	254.00	300	20.68	300	20.68	300	20.68	-	-	100	6.89	52	3.59	100	6.89
1920R	6.00	152.4	8.00	203.20	-	-	-	-	100	6.89	100	6.89	100	6.89	52	3.59	100	6.89
1922R	6.00	152.4	10.00	254.00	-	-	-	-	300	20.68	300	20.68	100	6.89	52	3.59	100	6.89

Pressure Temperature Ratings for R Orifice

ASME Ratings (R Orifice - 18.6 in² (120 cm²) Actual)													Backpressure Ratings @ 100°F (37.8°C)					
Valve Type	Connection				Standard Material of Construction								Conventional		Bellows			
	Inlet		Outlet		-20 to 100°F (-28.9 to 37.8°C)		450°F (232.2°C)		800°F (426.7°C)		1000°F (537.8°C)				LP		HP	
	in.	mm	in.	mm	psig	barg	psig	barg	psig	barg	psig	barg	psig	barg	psig	barg	psig	barg
1905R	6.00	152.4	8.00	203.20	150	10.34	150	10.34	80	5.52	-	-	150	10.34	52	3.59	145	10.00
1906R	6.00	152.4	8.00	203.20	150	10.34	150	10.34	150	10.34	-	-	150	10.34	52	3.59	145	10.00
1910R	6.00	152.4	10.00	254.00	450	31.03	450	31.03	410	28.27	-	-	290	19.99	52	3.59	145	10.00
1912R	6.00	152.4	10.00	254.00	650	44.82	650	44.82	650	44.82	-	-	290	19.99	52	3.59	145	10.00
1920R	6.00	152.4	8.00	203.20	-	-	-	-	450	31.03	215	14.82	290	19.99	52	3.59	145	10.00
1922R	6.00	152.4	10.00	254.00	-	-	-	-	650	44.82	430	29.65	290	19.99	52	3.59	145	10.00

Pressure / Temperature (Contd.)

Selection Chart for Vapors, Gases and Liquids

1900 and 1900-30 Series, R Orifice - API Area: 16.0 Sq. in.

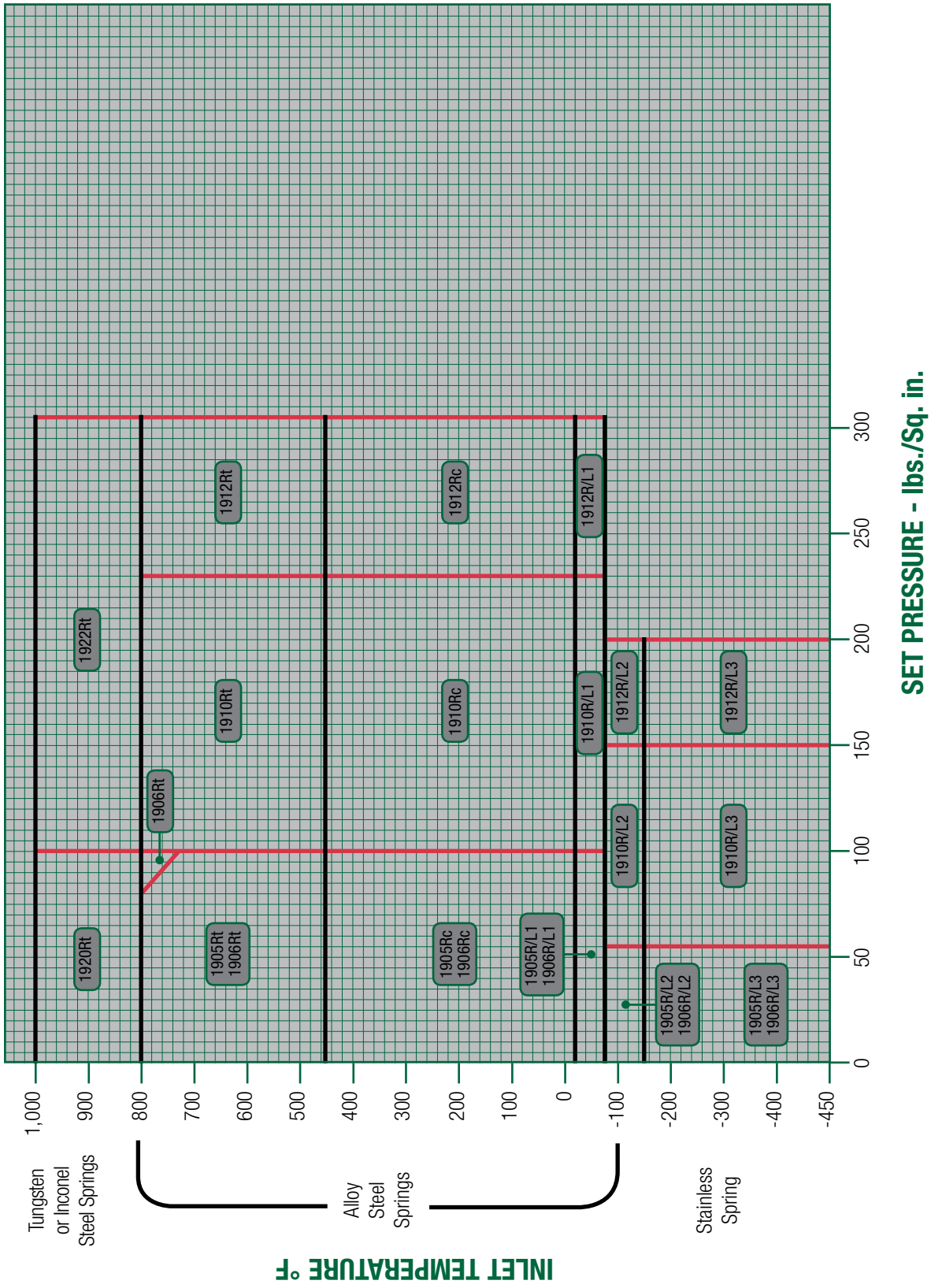

Pressure / Temperature (Contd.)

Pressure Temperature Ratings for T Orifice

API Ratings (T Orifice - 26 in^2 (167.742 cm^2))													Backpressure Ratings @ 100°F (37.8°C)					
Valve Type	Connection				Standard Material of Construction								Conventional		Bellows			
	Inlet		Outlet		-20 to 100°F (-28.9 to 37.8°C)		450°F (232.2°C)		800°F (426.7°C)		1000°F (537.8°C)				LP		HP	
	in.	mm	in.	mm	psig	barg	psig	barg	psig	barg	psig	barg	psig	barg	psig	barg	psig	barg
1905T	8.00	203.2	10.00	254.00	65	4.48	65	4.48	65	4.48	-	-	60	4.14	52	3.59	60	4.14
1906T	8.00	203.2	10.00	254.00	65	4.48	65	4.48	65	4.48	-	-	60	4.14	52	3.59	60	4.14
1910T	8.00	203.2	10.00	254.00	120	8.27	120	8.27	120	8.27	-	-	100	6.89	52	3.59	100	6.89
1912T	8.00	203.2	10.00	254.00	300	20.68	300	20.68	300	20.68	-	-	100	6.89	52	3.59	100	6.89
1920T	8.00	203.2	10.00	254.00	-	-	-	-	120	8.27	100	6.89	100	6.89	52	3.59	100	6.89
1922T	8.00	203.2	10.00	254.00	-	-	-	-	300	20.68	300	20.68	100	6.89	52	3.59	100	6.89

Pressure Temperature Ratings for T Orifice

ASME Ratings (T Orifice - 30.21 in^2 (194.903 cm^2) Actual)													Backpressure Ratings @ 100°F (37.8°C)					
Valve Type	Connection				Standard Material of Construction								Conventional		Bellows			
	Inlet		Outlet		-20 to 100°F (-28.9 to 37.8°C)		450°F (232.2°C)		800°F (426.7°C)		1000°F (537.8°C)				LP		HP	
	in.	mm	in.	mm	psig	barg	psig	barg	psig	barg	psig	barg	psig	barg	psig	barg	psig	barg
1905T	8.00	203.2	10.00	254.00	125	8.62	125	8.62	80	5.52	-	-	125	8.62	41	2.83	125	8.62
1906T	8.00	203.2	10.00	254.00	125	8.62	125	8.62	125	8.62	-	-	125	8.62	41	2.83	125	8.62
1910T	8.00	203.2	10.00	254.00	360	24.82	360	24.82	360	24.82	-	-	290	19.99	41	2.83	145	10.00
1912T	8.00	203.2	10.00	254.00	360	24.82	360	24.82	360	24.82	-	-	290	19.99	41	2.83	145	10.00
1920T	8.00	203.2	10.00	254.00	-	-	-	-	360	24.82	215	14.82	290	19.99	41	2.83	145	10.00
1922T	8.00	203.2	10.00	254.00	-	-	-	-	360	24.82	430	29.65	290	19.99	41	2.83	145	10.00

Pressure / Temperature (Contd.)

Selection Chart for Vapors, Gases and Liquids

1900 and 1900-30 Series, T Orifice - Area: 30.21 Sq. in.

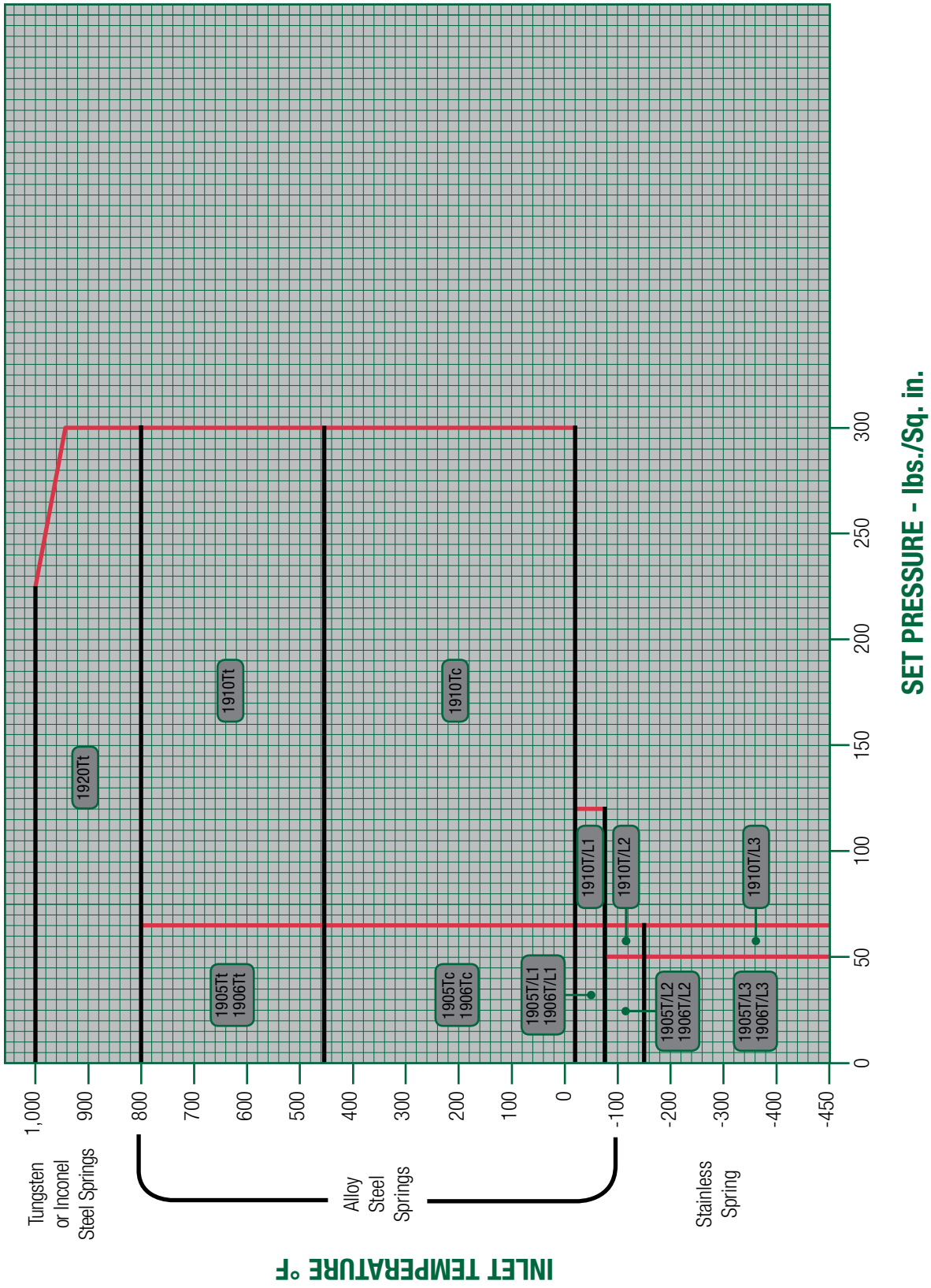

Pressure / Temperature (Contd.)

Pressure Temperature Ratings for U Orifice[1]

ASME Ratings (U Orifice - 35.01 in² (225.871 cm²) Actual)													Backpressure Ratings @ 100°F (37.8°C)					
Valve Type	Connection				Standard Material of Construction								Conventional		Bellows			
	Inlet		Outlet		-20 to 100°F (-28.9 to 37.8°C)		450°F (232.2°C)		800°F (426.7°C)		1000°F (537.8°C)				LP		HP	
	in.	mm	in.	mm	psig	barg	psig	barg	psig	barg	psig	barg	psig	barg	psig	barg	psig	barg
1905U	8.00	203.2	10.00	254.00	125	8.62	125	8.62	80	5.52	-	-	125	8.62	41	2.83	125	8.62
1906U	8.00	203.2	10.00	254.00	125	8.62	125	8.62	125	8.62	-	-	125	8.62	41	2.83	125	8.62
1910U	8.00	203.2	10.00	254.00	360	24.82	360	24.82	360	24.82	-	-	290	19.99	41	2.83	145	10.00
1920U	8.00	203.2	10.00	254.00	-	-	-	-	360	24.82	215	14.82	290	19.99	41	2.83	145	10.00

Pressure Temperature Ratings for V Orifice[1]

ASME Ratings (V Orifice - 50.26 in² (324.257 cm²) Actual)													Backpressure Ratings @ 100°F (37.8°C)					
Valve Type	Connection				Standard Material of Construction								Conventional		Bellows			
	Inlet		Outlet		-20 to 100°F (-28.9 to 37.8°C)		450°F (232.2°C)		800°F (426.7°C)		1000°F (537.8°C)				LP		HP	
	in.	mm	in.	mm	psig	barg	psig	barg	psig	barg	psig	barg	psig	barg	psig	barg	psig	barg
1905V	10.00	254	14.00	355.60	154	10.62	154	10.62	80	5.52	-	-	154	10.62	-	-	72	4.96
1906V	10.00	254	14.00	355.60	154	10.62	154	10.62	154	10.62	-	-	154	10.62	-	-	72	4.96
1910V	10.00	254	14.00	355.60	300	20.68	300	20.68	300	20.68	-	-	290	19.99	-	-	72	4.96
1920V	10.00	254	14.00	355.60	-	-	-	-	300	20.68	154	10.62	290	19.99	-	-	72	4.96

Pressure Temperature Ratings for W Orifice[1]

ASME Ratings (W Orifice - 78.996 in² (509.651 cm²) Actual)													Backpressure Ratings @ 100°F (37.8°C)					
Valve Type	Connection				Standard Material of Construction								Conventional		Bellows			
	Inlet		Outlet		-20 to 100°F (-28.9 to 37.8°C)		450°F (232.2°C)		800°F (426.7°C)		1000°F (537.8°C)				LP		HP	
	in.	mm	in.	mm	psig	barg	psig	barg	psig	barg	psig	barg	psig	barg	psig	barg	psig	barg
1905W	12.00	304.8	16.00	406.40	154	10.62	154	10.62	80	5.52	-	-	154	10.62	-	-	72	4.96
1906W	12.00	304.8	16.00	406.40	154	10.62	154	10.62	154	10.62	-	-	154	10.62	-	-	72	4.96
1910W	12.00	304.8	16.00	406.40	300	20.68	300	20.68	300	20.68	-	-	290	19.99	-	-	72	4.96
1920W	12.00	304.8	16.00	406.40	-	-	-	-	300	20.68	154	10.62	290	19.99	-	-	72	4.96

Note

1 This valve is not listed in API 526 standard

Capacities

Valve Capacity for ASME B&PV Code Section VIII, for Air[1 & 2]

Capacities Based on Set Pressure plus 10% overpressure or 3 psig (0.21 barg), whichever is greater. Capacities in ft^3 (m^3) of air per minute @ 60°F (15.6°C).

Orifice Designation	D		E		F		G		H		J		K		L	
Orifice Area	in^2	cm^2	in^2	cm^2	in^2	cm^2	in^2	cm^2	in^2	cm^2	in^2	cm^2	in^2	cm^2	in^2	cm^2
	0.128	0.825	0.228	1.470	0.357	2.302	0.585	3.774	0.913	5.888	1.496	9.652	2.138	13.794	3.317	21.400
Set Pressure	Orifice Capacity															
psig	barg	ft^3/min	m^3/min	ft^3/min	m^3/min	ft^3/min	m^3/min	ft^3/min	m^3/min	ft^3/min	m^3/min	ft^3/min	m^3/min	ft^3/min	m^3/min	ft^3/min	m^3/min
15	1.03	65	2	116	3	183	5	300	8	468	13	767	22	1097	31	1702	48
20	1.38	75	2	134	4	211	6	346	10	539	15	885	25	1264	36	1962	56
30	2.07	95	3	170	5	267	8	437	12	683	19	1119	32	1600	45	2483	70
40	2.76	117	3	209	6	328	9	538	15	840	24	1378	39	1969	56	3055	87
50	3.45	139	4	249	7	390	11	639	18	998	28	1636	46	2338	66	3628	103
60	4.14	161	5	288	8	451	13	740	21	1155	33	1894	54	2707	77	4200	119
70	4.83	184	5	327	9	513	15	841	24	1313	37	2152	61	3076	87	4773	135
80	5.52	206	6	367	10	575	16	942	27	1470	42	2411	68	3445	98	5346	151
90	6.21	228	6	406	11	636	18	1043	30	1628	46	2669	76	3814	108	5918	168
100	6.89	250	7	445	13	698	20	1144	32	1786	51	2927	83	4183	118	6491	184
120	8.27	294	8	524	15	821	23	1346	38	2101	59	3444	98	4922	139	7636	216
140	9.65	338	10	603	17	944	27	1548	44	2416	68	3960	112	5660	160	8781	249
160	11.03	382	11	682	19	1067	30	1750	50	2731	77	4477	127	6398	181	9926	281
180	12.41	426	12	760	22	1190	34	1952	55	3046	86	4993	141	7136	202	11072	314
200	13.79	471	13	839	24	1314	37	2154	61	3361	95	5510	156	7874	223	12217	346
220	15.17	515	15	918	26	1437	41	2356	67	3676	104	6026	171	8612	244	13362	378
240	16.55	559	16	996	28	1560	44	2558	72	3991	113	6543	185	9351	265	14507	411
260	17.93	603	17	1075	30	1683	48	2760	78	4307	122	7059	200	10089	286	15652	443
280	19.31	647	18	1154	33	1806	51	2962	84	4622	131	7576	215	10827	307	16798	476
300	20.68	691	20	1232	35	1930	55	3163	90	4937	140	8092	229	11565	327	17943	508
320	22.06	736	21	1311	37	2053	58	3365	95	5252	149	8609	244	12303	348	19088	541
340	23.44	780	22	1390	39	2176	62	3567	101	5567	158	9125	258	13041	369	20233	573
360	24.82	824	23	1468	42	2299	65	3769	107	5882	167	9642	273	13779	390	21378	605
380	26.20	868	25	1547	44	2422	69	3971	112	6197	175	10158	288	14518	411	22524	638
400	27.58	912	26	1626	46	2546	72	4173	118	6512	184	10675	302	15256	432	23669	670
420	28.96	956	27	1704	48	2669	76	4375	124	6827	193	11191	317	15994	453	24814	703
440	30.34	1000	28	1783	50	2792	79	4577	130	7143	202	11708	332	16732	474	25959	735
460	31.72	1045	30	1862	53	2915	83	4779	135	7458	211	12224	346	17470	495	27104	767
480	33.09	1089	31	1940	55	3038	86	4981	141	7773	220	12741	361	18208	516	28250	800
500	34.47	1133	32	2019	57	3161	90	5183	147	8088	229	13257	375	18946	536	29395	832
600	41.37	1354	38	2413	68	3777	107	6193	175	9663	274	15840	449	22637	641	35121	995
700	48.26	1575	45	2806	79	4393	124	7202	204	11239	318	18422	522	26328	746	40847	1157
800	55.16	1795	51	3199	91	5009	142	8212	233	12815	363	21004	595	30019	850	46573	1319
900	62.05	2016	57	3593	102	5625	159	9222	261	14390	407	23587	668	33709	955	52299	1481
1000	68.95	2237	63	3986	113	6241	177	10231	290	15966	452	26169	741	37400	1059	58025	1643
1100	75.84	2458	70	4380	124	6857	194	11241	318	17541	497	28752	814	41091	1164	63751	1805
1200	82.74	2678	76	4773	135	7473	212	12251	347	19117	541	31334	887	44782	1268	69477	1967
1300	89.63	2899	82	5166	146	8089	229	13260	375	20692	586	33917	960	48472	1373	75203	2130
1400	96.53	3120	88	5560	157	8705	246	14270	404	22268	631	36499	1034	52163	1477	80929	2292
1500	103.42	3341	95	5953	169	9321	264	15280	433	23843	675	39082	1107	55854	1582	86655	2454
2000	137.90	4445	126	7920	224	12400	351	20328	576	31721	898	51994	1472	74308	2104	—	—
2500	172.37	5549	157	9887	280	15480	438	25377	719	39599	1121	64907	1838	—	—	—	—
3000	206.84	6653	188	11855	336	18560	526	30425	862	47477	1344	77819	2204	—	—	—	—
4000	275.79	8861	251	15789	447	24719	700	—	—	—	—	—	—	—	—	—	—
5000	344.74	11068	313	19723	558	30878	874	—	—	—	—	—	—	—	—	—	—
6000	413.69	13276	376	23657	670	—	—	—	—	—	—	—	—	—	—	—	—

Note

Note 1: For temperatures other than 60°F (15.6°C) and specific gravities other than air, use formula sizing method.

Note 2: **Sizing:** Valves may be sized for either ASME or API applications

Capacities (Contd.)

Valve Capacity for ASME B&PV Code Section VIII, for Air[1 & 2]

Capacities Based on Set Pressure plus 10% overpressure or 3 psig (0.21 barg), whichever is greater. Capacities in ft^3 (m^3) of air per minute @ 60°F (15.6°C).

Orifice Designation	M		N		P		Q		R		T		U		V		W	
Orifice Area	in^2	cm^2	in^2	cm^2	in^2	cm^2	in^2	cm^2	in^2	cm^2	in^2	cm^2	in^2	cm^2	in^2	cm^2	in^2	cm^2
	4.186	27.006	5.047	32.561	7.417	47.852	12.850	82.903	18.600	120.000	30.210	194.903	35.010	225.871	50.260	324.257	78.996	509.651
Set Pressure	Orifice Capacity																	
psig	barg	ft^3/min	m^3/min	ft^3/min	m^3/min	ft^3/min	m^3/min	ft^3/min	m^3/min	ft^3/min	m^3/min	ft^3/min	m^3/min	ft^3/min	m^3/min	ft^3/min	m^3/min	ft^3/min	m^3/min
15	1.03	2148	61	2589	73	3806	108	6594	187	9544	270	15502	439	17966	509	25791	730	40538	1148
20	1.38	2476	70	2985	85	4388	124	7602	215	11004	312	17873	506	20713	587	29735	842	46736	1323
30	2.07	3133	89	3778	107	5552	157	9619	272	13923	394	22614	640	26207	742	37623	1065	59133	1674
40	2.76	3856	109	4649	132	6832	193	11837	335	17134	485	27829	788	32251	913	46299	1311	72770	2061
50	3.45	4578	130	5520	156	8112	230	14055	398	20345	576	33044	936	38294	1084	54975	1557	86407	2447
60	4.14	5301	150	6391	181	9393	266	16273	461	23555	667	38259	1083	44338	1256	63651	1802	100044	2833
70	4.83	6023	171	7263	206	10673	302	18492	524	26766	758	43474	1231	50381	1427	72327	2048	113680	3219
80	5.52	6746	191	8134	230	11953	338	20710	586	29977	849	48689	1379	56425	1598	81003	2294	127317	3605
90	6.21	7469	211	9005	255	13234	375	22928	649	33188	940	53904	1526	62469	1769	89680	2539	140954	3991
100	6.89	8191	232	9876	280	14514	411	25146	712	36399	1031	59119	1674	68512	1940	98356	2785	154591	4378
120	8.27	9637	273	11619	329	17075	484	29583	838	42820	1213	69549	1969	80600	2282	115708	3276	181864	5150
140	9.65	11082	314	13361	378	19636	556	34019	963	49242	1394	79979	2265	92687	2625	133061	3768	209138	5922
160	11.03	12527	355	15104	428	22196	629	38456	1089	55664	1576	90409	2560	104774	2967	150413	4259	236411	6694
180	12.41	13972	396	16846	477	24757	701	42892	1215	62086	1758	100839	2855	116861	3309	167765	4751	263685	7467
200	13.79	15417	437	18589	526	27318	774	47329	1340	68507	1940	111269	3151	128949	3651	185118	5242	290958	8239
220	15.17	16863	478	20331	576	29879	846	51765	1466	74929	2122	121699	3446	141036	3994	202470	5733	318232	9011
240	16.55	18308	518	22074	625	32439	919	56202	1591	81351	2304	132129	3741	153123	4336	219822	6225	345505	9784
260	17.93	19753	559	23816	674	35000	991	60638	1717	87772	2485	142559	4037	165210	4678	237175	6716	372779	10556
280	19.31	21198	600	25559	724	37561	1064	65075	1843	94194	2667	152990	4332	177298	5021	254527	7207	400052	11328
300	20.68	22644	641	27301	773	40122	1136	69511	1968	100616	2849	163420	4628	189385	5363	271879	7699	427326	12101
320	22.06	24089	682	29044	822	42682	1209	73948	2094	—	—	—	—	—	—	—	—	—	—
340	23.44	25534	723	30786	872	45243	1281	78384	2220	—	—	—	—	—	—	—	—	—	—
360	24.82	26979	764	32529	921	47804	1354	82821	2345	—	—	—	—	—	—	—	—	—	—
380	26.20	28424	805	34271	970	50364	1426	87257	2471	—	—	—	—	—	—	—	—	—	—
400	27.58	29870	846	36014	1020	52925	1499	91694	2596	—	—	—	—	—	—	—	—	—	—
420	28.96	31315	887	37756	1069	55486	1571	96130	2722	—	—	—	—	—	—	—	—	—	—
440	30.34	32760	928	39498	1118	58047	1644	100567	2848	—	—	—	—	—	—	—	—	—	—
460	31.72	34205	969	41241	1168	60607	1716	105003	2973	—	—	—	—	—	—	—	—	—	—
480	33.09	35651	1010	42983	1217	63168	1789	109440	3099	—	—	—	—	—	—	—	—	—	—
500	34.47	37096	1050	44726	1266	65729	1861	113876	3225	—	—	—	—	—	—	—	—	—	—
600	41.37	44322	1255	53438	1513	78533	2224	136058	3853	—	—	—	—	—	—	—	—	—	—
700	48.26	51548	1460	62151	1760	91336	2586	—	—	—	—	—	—	—	—	—	—	—	—
800	55.16	58774	1664	70863	2007	104140	2949	—	—	—	—	—	—	—	—	—	—	—	—
900	62.05	66000	1869	79576	2253	116944	3311	—	—	—	—	—	—	—	—	—	—	—	—
1000	68.95	73226	2074	88288	2500	129747	3674	—	—	—	—	—	—	—	—	—	—	—	—
1100	75.84	80453	2278	—	—	—	—	—	—	—	—	—	—	—	—	—	—	—	—
1200	82.74	—	—	—	—	—	—	—	—	—	—	—	—	—	—	—	—	—	—
1300	89.63	—	—	—	—	—	—	—	—	—	—	—	—	—	—	—	—	—	—
1400	96.53	—	—	—	—	—	—	—	—	—	—	—	—	—	—	—	—	—	—
1500	103.42	—	—	—	—	—	—	—	—	—	—	—	—	—	—	—	—	—	—
2000	137.90	—	—	—	—	—	—	—	—	—	—	—	—	—	—	—	—	—	—
2500	172.37	—	—	—	—	—	—	—	—	—	—	—	—	—	—	—	—	—	—
3000	206.84	—	—	—	—	—	—	—	—	—	—	—	—	—	—	—	—	—	—
4000	275.79	—	—	—	—	—	—	—	—	—	—	—	—	—	—	—	—	—	—
5000	344.74	—	—	—	—	—	—	—	—	—	—	—	—	—	—	—	—	—	—
6000	413.69	—	—	—	—	—	—	—	—	—	—	—	—	—	—	—	—	—	—

Note

Note 1: For temperatures other than 60°F (15.6°C) and specific gravities other than air, use formula sizing method.

Note 2: **Sizing:** Valves may be sized for either ASME or API applications

Capacities (Contd.)

Valve Capacity for ASME B&PV Code Section VIII, for Saturated Steam[1 & 4]

Capacities Based on Set Pressure plus 10% overpressure or 3 psig (0.21 barg), whichever is greater. Capacities in lbs./hr (kg/hr) of saturated steam

Orifice Designation		D		E		F		G		H		J		K		L	
Orifice Area		in^2	cm^2	in^2	cm^2	in^2	cm^2	in^2	cm^2	in^2	cm^2	in^2	cm^2	in^2	cm^2	in^2	cm^2
		0.128	0.825	0.228	1.470	0.357	2.302	0.585	3.774	0.913	5.888	1.496	9.652	2.138	13.794	3.317	21.400
Set Pressure		Orifice Capacity															
psig	barg	lb/hr	kg/hr	lb/hr	kg/hr	lb/hr	kg/hr	lb/hr	kg/hr	lb/hr	kg/hr	lb/hr	kg/hr	lb/hr	kg/hr	lb/hr	kg/hr
15	1.03	184	83	328	149	513	233	842	382	1314	596	2154	977	3078	1396	4776	2166
20	1.38	212	96	378	171	592	269	970	440	1515	687	2483	1126	3549	1610	5506	2497
30	2.07	268	122	478	217	749	340	1228	557	1916	869	3142	1425	4490	2037	6966	3160
40	2.76	330	150	589	267	922	418	1511	685	2359	1070	3866	1754	5526	2507	8573	3889
50	3.45	392	178	699	317	1095	497	1795	814	2801	1271	4591	2082	6561	2976	10180	4618
60	4.14	454	206	809	367	1267	575	2078	943	3243	1471	5315	2411	7597	3446	11786	5346
70	4.83	516	234	920	417	1440	653	2361	1071	3685	1671	6040	2740	8632	3915	13393	6075
80	5.52	578	262	1030	467	1613	732	2644	1199	4127	1872	6765	3069	9668	4385	14999	6803
90	6.21	640	290	1140	517	1786	810	2928	1328	4569	2072	7489	3397	10703	4855	16606	7532
100	6.89	702	318	1251	567	1959	889	3211	1456	5011	2273	8214	3726	11739	5325	18213	8261
120	8.27	826	375	1472	668	2304	1045	3778	1714	5895	2674	9663	4383	13810	6264	21426	9719
140	9.65	950	431	1692	767	2650	1202	4344	1970	6779	3075	11112	5040	15881	7204	24639	11176
160	11.03	1073	487	1913	868	2996	1359	4911	2228	7663	3476	12561	5698	17952	8143	27852	12633
180	12.41	1197	543	2134	968	3341	1515	5478	2485	8548	3877	14011	6355	20023	9082	31066	14091
200	13.79	1321	599	2355	1068	3687	1672	6044	2742	9432	4278	15460	7013	22095	10022	34279	15549
220	15.17	1445	655	2575	1168	4032	1829	6611	2999	10316	4679	16909	7670	24166	10962	37492	17006
240	16.55	1569	712	2796	1268	4378	1986	7177	3255	11200	5080	18358	8327	26237	11901	40705	18463
260	17.93	1693	768	3017	1368	4724	2143	7744	3513	12084	5481	19807	8984	28308	12840	43918	19921
280	19.31	1817	824	3238	1469	5069	2299	8311	3770	12968	5882	21257	9642	30379	13780	47132	21379
300	20.68	1941	880	3459	1569	5415	2456	8877	4027	13852	6283	22706	10299	32450	14719	50345	22836
320	22.06	2065	937	3679	1669	5761	2613	9444	4284	14737	6685	24155	10957	34521	15658	53558	24294
340	23.44	2189	993	3900	1769	6106	2770	10010	4540	15621	7086	25604	11614	36592	16598	56771	25751
360	24.82	2312	1049	4121	1869	6452	2927	10577	4798	16505	7487	27053	12271	38663	17537	59985	27209
380	26.20	2436	1105	4342	1969	6798	3084	11144	5055	17389	7888	28503	12929	40735	18477	63198	28666
400	27.58	2560	1161	4562	2069	7143	3240	11710	5312	18273	8288	29952	13586	42806	19416	66411	30124
420	28.96	2684	1217	4783	2170	7489	3397	12277	5569	19157	8689	31401	14243	44877	20356	69624	31581
440	30.34	2808	1274	5004	2270	7834	3553	12843	5825	20041	9090	32850	14901	46948	21295	72838	33039
460	31.72	2932	1330	5225	2370	8180	3710	13410	6083	20926	9492	34299	15558	49019	22235	76051	34496
480	33.09	3056	1386	5445	2470	8526	3867	13977	6340	21810	9893	35749	16215	51090	23174	79264	35954
500	34.47	3180	1442	5666	2570	8871	4024	14543	6597	22694	10294	37198	16873	53161	24113	82477	37411
600	41.37	3799	1723	6770	3071	10600	4808	17376	7882	27115	12299	44444	20159	63517	28811	98543	44698
700	48.26	4419	2004	7874	3572	12328	5592	20209	9167	31535	14304	51690	23446	73872	33508	114609	51986
800	55.16	5038	2285	8978	4072	14056	6376	23042	10452	35956	16309	58936	26733	84228	38205	130676	59274
900	62.05	5658	2566	10082	4573	15784	7160	25875	11737	40377	18315	66182	30020	94583	42902	146742	66561
1000	68.95	6277	2847	11186	5074	17512	7943	28708	13022	44798	20320	73428	33306	104939	47600	162808	73848
1100	75.84	6897	3128	12289	5574	19241	8728	31541	14307	49218	22325	80674	36593	115295	52297	178874	81136
1200	82.74	7516	3409	13393	6075	20969	9511	34374	15592	53639	24330	87920	39880	125650	56994	194940	88423
1300	89.63	8136	3690	14497	6576	22697	10295	37207	16877	58060	26336	95166	43167	136006	61691	211006	95711
1400	96.53	8755	3971	15601	7076	24425	11079	40040	18162	62481	28341	102412	46453	146361	66388	227072	102998
1423[2]	98.11	8898	4036	15855	7192	24823	11260	40692	18458	63497	28802	104078	47209	148743	67469	230768	104675
1500	103.42	9420	4273	16785	7614	26279	11920	43079	19540	67222	30491	110183	49978	157468	71426	244304	110814
2000	137.90	13024	5908	23207	10527	36334	16481	59562	27017	92943	42158	152343	69102	217721	98757	—	—
2500	172.37	17235	7818	30711	13930	48082	21810	78821	35753	122995	55790	201601	91445	—	—	—	—
2903[3]	200.15	21551	9775	38401	17418	60121	27270	98557	44705	—	—	—	—	—	—	—	—

Note

Note 1: Refer to page 1900.95 for correction factor applied for superheated steam.

Note 2: The following Napier factor is applied to the capacity of pressures greater than 1423 psig (98.11 barg): $(0.1906 \times P_{psia} - 1000) / (0.2292 \times P_{psia} - 1061)$

Note 3: Maximum permissible set pressure on steam is 2903 psig (200.15 barg). Value is interpolated.

Note 4: **Sizing:** Valves may be sized for either ASME or API applications

Capacities (Contd.)

Valve Capacity for ASME B&PV Code Section VIII, for Saturated Steam[1 & 4]

Capacities Based on Set Pressure plus 10% overpressure or 3 psig (0.21 barg), whichever is greater. Capacities in lbs./hr (kg/hr) of saturated steam

Orifice Designation		M		N		P		Q		R		T		U		V		W	
Orifice Area		in^2	cm^2	in^2	cm^2	in^2	cm^2	in^2	cm^2	in^2	cm^2	in^2	cm^2	in^2	cm^2	in^2	cm^2	in^2	cm^2
		4.186	27.006	5.047	32.561	7.417	47.852	12.850	82.903	18.600	120.000	30.210	194.903	35.010	225.871	50.260	324.257	78.996	509.651
Set Pressure		Orifice Capacity																	
psig	barg	ft^3/min	m^3/min	ft^3/min	m^3/min	ft^3/min	m^3/min	ft^3/min	m^3/min	ft^3/min	m^3/min	ft^3/min	m^3/min	ft^3/min	m^3/min	ft^3/min	m^3/min	ft^3/min	m^3/min
15	1.03	6027	2734	7266	3296	10679	4844	18502	8392	26781	12148	43498	19730	50409	22865	72367	32825	113743	51593
20	1.38	6948	3152	8378	3800	12312	5585	21331	9676	30876	14005	50149	22747	58117	26361	83432	37844	131135	59482
30	2.07	8792	3988	10600	4808	15578	7066	26989	12242	39066	17720	63451	28781	73533	33354	105563	47883	165919	75260
40	2.76	10819	4907	13045	5917	19170	8695	33213	15065	48075	21806	78084	35418	90490	41046	129907	58925	204181	92615
50	3.45	12847	5827	15489	7026	22763	10325	39437	17888	57084	25893	92716	42055	107447	48737	154251	69967	242443	109970
60	4.14	14874	6747	17934	8135	26355	11954	45661	20711	66093	29979	107348	48692	124405	56429	178595	81009	280706	127326
70	4.83	16902	7667	20378	9243	29948	13584	51885	23535	75102	34066	121981	55330	141362	64121	202938	92051	318968	144681
80	5.52	18929	8586	22823	10352	33540	15213	58109	26358	84111	38152	136613	61967	158320	71813	227282	103093	357230	162037
90	6.21	20957	9506	25267	11461	37133	16843	64333	29181	93120	42239	151246	68604	175277	79504	251626	114136	395493	179393
100	6.89	22984	10425	27712	12570	40725	18473	70557	32004	102129	46325	165878	75241	192234	87196	275970	125178	433755	196748
120	8.27	27039	12265	32601	14788	47910	21732	83005	37650	120147	54498	195143	88515	226149	102579	324657	147262	510280	231459
140	9.65	31094	14104	37490	17005	55095	24991	95453	43297	138166	62671	224408	101790	260064	117963	373345	169346	586804	266170
160	11.03	35149	15943	42379	19223	62280	28250	107901	48943	156184	70844	253673	115064	293978	133346	422033	191431	663329	300881
180	12.41	39204	17783	47268	21440	69465	31509	120349	54589	174202	79017	282938	128339	327893	148730	470720	213515	739853	335592
200	13.79	43259	19622	52157	23658	76650	34768	132797	60236	192220	87190	312203	141613	361808	164113	519408	235600	816378	370303
220	15.17	47314	21461	57046	25876	83835	38027	145245	65882	210238	95362	341467	154887	395723	179497	568095	257684	892903	405014
240	16.55	51369	23301	61936	28094	91020	41286	157693	71528	228256	103535	370732	168161	429637	194880	616783	279768	969427	439725
260	17.93	55425	25140	66825	30311	98205	44545	170141	77175	246274	111708	399997	181436	463552	210264	665471	301853	1045952	474436
280	19.31	59480	26980	71714	32529	105390	47804	182589	82821	264292	119881	429262	194710	497467	225647	714158	323937	1122476	509147
300	20.68	63535	28819	76603	34747	112575	51063	195037	88467	282310	128054	458527	207984	531381	241030	762846	346021	1199001	543858
320	22.06	67590	30658	81492	36964	119760	54322	207485	94114	—	—	—	—	—	—	—	—	—	—
340	23.44	71645	32498	86381	39182	126945	57581	219933	99760	—	—	—	—	—	—	—	—	—	—
360	24.82	75700	34337	91270	41399	134130	60840	232381	105406	—	—	—	—	—	—	—	—	—	—
380	26.20	79755	36176	96159	43617	141315	64099	244829	111053	—	—	—	—	—	—	—	—	—	—
400	27.58	83810	38016	101048	45835	148500	67358	257277	116699	—	—	—	—	—	—	—	—	—	—
420	28.96	87865	39855	105938	48053	155685	70618	269725	122345	—	—	—	—	—	—	—	—	—	—
440	30.34	91920	41694	110827	50270	162869	73876	282173	127992	—	—	—	—	—	—	—	—	—	—
460	31.72	95975	43534	115716	52488	170054	77135	294621	133638	—	—	—	—	—	—	—	—	—	—
480	33.09	100030	45373	120605	54706	177239	80394	307069	139284	—	—	—	—	—	—	—	—	—	—
500	34.47	104085	47212	125494	56923	184424	83653	319517	144930	—	—	—	—	—	—	—	—	—	—
600	41.37	124360	56409	149939	68011	220349	99949	381757	173162	—	—	—	—	—	—	—	—	—	—
700	48.26	144635	65605	174385	79100	256274	116244	—	—	—	—	—	—	—	—	—	—	—	—
800	55.16	164911	74802	198830	90188	292199	132539	—	—	—	—	—	—	—	—	—	—	—	—
900	62.05	185186	83999	223276	101276	328124	148835	—	—	—	—	—	—	—	—	—	—	—	—
1000	68.95	205461	93196	247722	112365	364048	165129	—	—	—	—	—	—	—	—	—	—	—	—
1100	75.84	225736	102392	—	—	—	—	—	—	—	—	—	—	—	—	—	—	—	—
1200	82.74	246011	111589	—	—	—	—	—	—	—	—	—	—	—	—	—	—	—	—
1300	89.63	—	—	—	—	—	—	—	—	—	—	—	—	—	—	—	—	—	—
1400	96.53	—	—	—	—	—	—	—	—	—	—	—	—	—	—	—	—	—	—
1423[2]	98.11	—	—	—	—	—	—	—	—	—	—	—	—	—	—	—	—	—	—
1500	103.42	—	—	—	—	—	—	—	—	—	—	—	—	—	—	—	—	—	—
2000	137.90	—	—	—	—	—	—	—	—	—	—	—	—	—	—	—	—	—	—
2500	172.37	—	—	—	—	—	—	—	—	—	—	—	—	—	—	—	—	—	—
2903[3]	200.15	—	—	—	—	—	—	—	—	—	—	—	—	—	—	—	—	—	—

Note

Note 1: Refer to page 1900.95 for correction factor applied for superheated steam.

Note 2: The following Napier factor is applied to the capacity of pressures greater than 1423 psig (98.11 barg): $(0.1906 \times P_{psia} - 1000) / (0.2292 \times P_{psia} - 1061)$

Note 3: Maximum permissible set pressure on steam is 2903 psig (200.15 barg). Value is interpolated.

Note 4: **Sizing:** Valves may be sized for either ASME or API applications

Capacities (Contd.)

Valve Capacity for ASME B&PV Code Section VIII, for Water[1]

Capacities Based on Set Pressure plus 10% overpressure or 3 psig (0.21 barg), whichever is greater. Capacities in gpm (L/min) of water

Orifice Designation		D		E		F		G		H		J		K		L	
Orifice Area		in^2	cm^2	in^2	cm^2	in^2	cm^2	in^2	cm^2	in^2	cm^2	in^2	cm^2	in^2	cm^2	in^2	cm^2
		0.128	0.825	0.228	1.470	0.357	2.302	0.585	3.774	0.913	5.888	1.496	9.652	2.138	13.794	3.317	21.400
Set Pressure		Orifice Capacity															
psig	barg	gpm	L/min	gpm	L/min	gpm	L/min	gpm	L/min	gpm	L/min	gpm	L/min	gpm	L/min	gpm	L/min
15	1.03	13	8	24	15	38	24	63	40	98	62	161	102	230	145	358	226
20	1.38	15	9	27	17	43	27	71	45	111	70	182	115	261	165	404	255
30	2.07	18	11	33	21	52	33	85	54	133	84	218	138	312	197	485	306
40	2.76	21	13	38	24	60	38	98	62	154	97	252	159	361	228	560	353
50	3.45	24	15	43	27	67	42	110	69	172	109	282	178	403	254	626	395
60	4.14	26	16	47	30	73	46	120	76	188	119	309	195	442	279	686	433
70	4.83	28	18	50	32	79	50	130	82	203	128	334	211	477	301	741	467
80	5.52	30	19	54	34	85	54	139	88	217	137	357	225	510	322	792	500
90	6.21	32	20	57	36	90	57	148	93	231	146	378	238	541	341	840	530
100	6.89	34	21	60	38	95	60	156	98	243	153	399	252	570	360	885	558
120	8.27	37	23	66	42	104	66	171	108	266	168	437	276	625	394	970	612
140	9.65	40	25	72	45	112	71	184	116	288	182	472	298	675	426	1047	661
160	11.03	43	27	76	48	120	76	197	124	308	194	505	319	722	455	1120	707
180	12.41	45	28	81	51	127	80	209	132	326	206	535	338	765	483	1188	749
200	13.79	48	30	86	54	134	85	220	139	344	217	564	356	807	509	1252	790
220	15.17	50	32	90	57	141	89	231	146	361	228	592	373	846	534	1313	828
240	16.55	52	33	94	59	147	93	241	152	377	238	618	390	884	558	1372	866
260	17.93	55	35	98	62	153	97	251	158	392	247	644	406	920	580	1428	901
280	19.31	57	36	101	64	159	100	261	165	407	257	668	421	955	602	1482	935
300	20.68	59	37	105	66	165	104	270	170	422	266	691	436	988	623	1534	968
320	22.06	61	38	108	68	170	107	279	176	435	274	714	450	1021	644	1584	999
340	23.44	62	39	112	71	175	110	287	181	449	283	736	464	1052	664	1633	1030
360	24.82	64	40	115	73	180	114	296	187	462	291	757	478	1083	683	1680	1060
380	26.20	66	42	118	74	185	117	304	192	475	300	778	491	1112	702	1726	1089
400	27.58	68	43	121	76	190	120	312	197	487	307	798	503	1141	720	1771	1117
420	28.96	69	44	124	78	195	123	320	202	499	315	818	516	1169	738	1815	1145
440	30.34	71	45	127	80	199	126	327	206	511	322	837	528	1197	755	1857	1172
460	31.72	73	46	130	82	204	129	334	211	522	329	856	540	1224	772	1899	1198
480	33.09	74	47	133	84	208	131	342	216	533	336	875	552	1250	789	1940	1224
500	34.47	76	48	136	86	213	134	349	220	544	343	893	563	1276	805	1980	1249
600	41.37	83	52	149	94	233	147	382	241	596	376	978	617	1398	882	2169	1368
700	48.26	90	57	161	102	252	159	413	261	644	406	1056	666	1510	953	2343	1478
800	55.16	96	61	172	109	269	170	441	278	689	435	1129	712	1614	1018	2505	1580
900	62.05	102	64	182	115	285	180	468	295	731	461	1198	756	1712	1080	2657	1676
1000	68.95	107	68	192	121	301	190	493	311	770	486	1263	797	1805	1139	2800	1766
1100	75.84	113	71	201	127	315	199	517	326	808	510	1324	835	1893	1194	2937	1853
1200	82.74	118	74	210	132	330	208	541	341	844	532	1383	873	1977	1247	3068	1936
1300	89.63	123	78	219	138	343	216	563	355	878	554	1440	908	2058	1298	3193	2014
1400	96.53	127	80	227	143	356	225	584	368	911	575	1494	943	2136	1348	3313	2090
1500	103.42	132	83	235	148	368	232	604	381	943	595	1547	976	2211	1395	3430	2164
2000	137.90	152	96	272	172	426	269	698	440	1089	687	1786	1127	2553	1611	—	—
2500	172.37	170	107	304	192	476	300	780	492	1218	768	1997	1260	—	—	—	—
3000	206.84	187	118	333	210	521	329	855	539	1334	842	2187	1380	—	—	—	—
4000	275.79	215	136	215	136	602	380	987	623	—	—	—	—	—	—	—	—
5000	344.74	241	152	241	152	673	425	—	—	—	—	—	—	—	—	—	—
6000	413.69	264	167	264	167	—	—	—	—	—	—	—	—	—	—	—	—

Note

Note 1: **Sizing:** Valves may be sized for either ASME or API applications

Capacities (Contd.)

Valve Capacity for ASME B&PV Code Section VIII, for Water[1]

Capacities Based on Set Pressure plus 10% overpressure or 3 psig (0.21 barg), whichever is greater. Capacities in gpm (L/min) of water

Orifice Designation		M		N		P		Q		R		T		U		V		W	
Orifice Area		in^2	cm^2	in^2	cm^2	in^2	cm^2	in^2	cm^2	in^2	cm^2	in^2	cm^2	in^2	cm^2	in^2	cm^2	in^2	cm^2
		4.186	27.006	5.047	32.561	7.417	47.852	12.850	82.903	18.600	120.000	30.210	194.903	35.010	225.871	50.260	324.257	78.996	509.651
Set Pressure		Orifice Capacity																	
psig	barg	gpm	L/Sec	gpm	L/Sec	gpm	L/Sec	gpm	L/Sec	gpm	L/Sec	gpm	L/Sec	gpm	L/Sec	gpm	L/Sec	gpm	L/Sec
15	1.03	452	285	545	344	801	505	1387	875	2009	1267	3263	2059	3780	2385	5428	3424	8532	5383
20	1.38	511	322	616	389	905	571	1568	989	2271	1433	3688	2327	4273	2696	6136	3871	9645	6085
30	2.07	612	386	738	466	1084	684	1879	1185	2720	1716	4418	2787	5118	3229	7350	4637	11553	7289
40	2.76	706	445	852	538	1252	790	2170	1369	3141	1982	5101	3218	5910	3729	8487	5354	13340	8416
50	3.45	790	498	952	601	1400	883	2426	1531	3511	2215	5703	3598	6608	4169	9489	5986	14915	9410
60	4.14	865	546	1043	658	1534	968	2657	1676	3847	2427	6248	3942	7239	4567	10395	6558	16338	10307
70	4.83	935	590	1127	711	1656	1045	2870	1811	4155	2621	6749	4258	7819	4933	11228	7084	17648	11134
80	5.52	999	630	1205	760	1771	1117	3068	1936	4442	2802	7215	4552	8359	5274	12003	7573	18866	11902
90	6.21	1060	669	1278	806	1878	1185	3255	2054	4711	2972	7652	4828	8866	5593	12731	8032	20010	12624
100	6.89	1117	705	1347	850	1980	1249	3431	2165	4966	3133	8066	5089	9345	5896	13420	8466	21093	13307
120	8.27	1224	772	1476	931	2169	1368	3758	2371	5440	3432	8836	5574	10237	6458	14701	9275	23106	14577
140	9.65	1322	834	1594	1006	2343	1478	4059	2561	5876	3707	9544	6021	11057	6976	15879	10018	24958	15746
160	11.03	1413	891	1704	1075	2505	1580	4340	2738	6282	3963	10203	6437	11821	7458	16975	10709	26681	16833
180	12.41	1499	946	1808	1141	2657	1676	4603	2904	6663	4204	10822	6827	12538	7910	18005	11359	28299	17853
200	13.79	1580	997	1905	1202	2800	1766	4852	3061	7023	4431	11407	7196	13216	8338	18979	11974	29830	18819
220	15.17	1657	1045	1998	1261	2937	1853	5089	3211	7366	4647	11964	7548	13861	8745	19905	12558	31286	19738
240	16.55	1731	1092	2087	1317	3068	1936	5315	3353	7694	4854	12496	7884	14478	9134	20790	13116	32677	20615
260	17.93	1802	1137	2173	1371	3193	2014	5532	3490	8008	5052	13007	8206	15069	9507	21639	13652	34012	21458
280	19.31	1870	1180	2255	1423	3313	2090	5741	3622	8310	5243	13498	8516	15638	9866	22456	14167	35296	22268
300	20.68	1935	1221	2334	1472	3430	2164	5942	3749	8602	5427	13971	8814	16187	10212	23244	14664	36534	23049
320	22.06	1999	1261	2410	1520	3542	2235	6137	3872	—	—	—	—	—	—	—	—	—	—
340	23.44	2061	1300	2484	1567	3651	2303	6326	3991	—	—	—	—	—	—	—	—	—	—
360	24.82	2120	1337	2556	1613	3757	2370	6510	4107	—	—	—	—	—	—	—	—	—	—
380	26.20	2178	1374	2627	1657	3860	2435	6688	4219	—	—	—	—	—	—	—	—	—	—
400	27.58	2235	1410	2695	1700	3960	2498	6862	4329	—	—	—	—	—	—	—	—	—	—
420	28.96	2290	1445	2761	1742	4058	2560	7031	4436	—	—	—	—	—	—	—	—	—	—
440	30.34	2344	1479	2826	1783	4154	2621	7197	4540	—	—	—	—	—	—	—	—	—	—
460	31.72	2397	1512	2890	1823	4247	2679	7359	4643	—	—	—	—	—	—	—	—	—	—
480	33.09	2448	1544	2952	1862	4339	2737	7517	4742	—	—	—	—	—	—	—	—	—	—
500	34.47	2499	1577	3013	1901	4428	2794	7672	4840	—	—	—	—	—	—	—	—	—	—
600	41.37	2737	1727	3301	2083	4851	3060	8404	5302	—	—	—	—	—	—	—	—	—	—
700	48.26	2957	1866	3565	2249	5239	3305	9078	5727	—	—	—	—	—	—	—	—	—	—
800	55.16	3161	1994	3811	2404	5601	3534	9704	6122	—	—	—	—	—	—	—	—	—	—
900	62.05	3353	2115	4042	2550	5941	3748	10293	6494	—	—	—	—	—	—	—	—	—	—
1000	68.95	3534	2230	4261	2688	6262	3951	10850	6845	—	—	—	—	—	—	—	—	—	—
1100	75.84	3707	2339	—	—	—	—	—	—	—	—	—	—	—	—	—	—	—	—
1200	82.74	—	—	—	—	—	—	—	—	—	—	—	—	—	—	—	—	—	—
1300	89.63	—	—	—	—	—	—	—	—	—	—	—	—	—	—	—	—	—	—
1400	96.53	—	—	—	—	—	—	—	—	—	—	—	—	—	—	—	—	—	—
1500	103.42	—	—	—	—	—	—	—	—	—	—	—	—	—	—	—	—	—	—
2000	137.90	—	—	—	—	—	—	—	—	—	—	—	—	—	—	—	—	—	—
2500	172.37	—	—	—	—	—	—	—	—	—	—	—	—	—	—	—	—	—	—
3000	206.84	—	—	—	—	—	—	—	—	—	—	—	—	—	—	—	—	—	—
4000	275.79	—	—	—	—	—	—	—	—	—	—	—	—	—	—	—	—	—	—
5000	344.74	—	—	—	—	—	—	—	—	—	—	—	—	—	—	—	—	—	—
6000	413.69	—	—	—	—	—	—	—	—	—	—	—	—	—	—	—	—	—	—

Note

Note 1: **Sizing:** Valves may be sized for either ASME or API applications

Capacities (Contd.)

Superheat Correction Factor[1&2]

Total Temp. (°F)	400	450	500	550	600	650	700	750	800	850	900	950	1000	1050	1100	1150	1200
Flowing Pressure[3] (psia)	Superheat Correction Factor K_{sh}																
50	0.987	0.957	0.93	0.905	0.882	0.861	0.841	0.823	0.805	0.789	0.774	0.759	0.745	0.732	0.719	0.708	0.696
100	0.998	0.963	0.935	0.909	0.885	0.864	0.843	0.825	0.807	0.79	0.775	0.76	0.746	0.733	0.72	0.708	0.697
150	0.984	0.97	0.94	0.913	0.888	0.866	0.846	0.826	0.808	0.792	0.776	0.761	0.747	0.733	0.721	0.709	0.697
200	0.979	0.977	0.945	0.917	0.892	0.869	0.848	0.828	0.81	0.793	0.777	0.762	0.748	0.734	0.721	0.709	0.698
250	-	0.972	0.951	0.921	0.895	0.871	0.85	0.83	0.812	0.794	0.778	0.763	0.749	0.735	0.722	0.71	0.698
300	-	0.968	0.957	0.926	0.898	0.874	0.852	0.832	0.813	0.796	0.78	0.764	0.75	0.736	0.723	0.71	0.699
350	-	0.968	0.963	0.93	0.902	0.877	0.854	0.834	0.815	0.797	0.781	0.765	0.75	0.736	0.723	0.711	0.699
400	-	-	0.963	0.935	0.906	0.88	0.857	0.836	0.816	0.798	0.782	0.766	0.751	0.737	0.724	0.712	0.7
450	-	-	0.961	0.94	0.909	0.883	0.859	0.838	0.818	0.8	0.783	0.767	0.752	0.738	0.725	0.712	0.7
500	-	-	0.961	0.946	0.914	0.886	0.862	0.84	0.82	0.801	0.784	0.768	0.753	0.739	0.725	0.713	0.701
550	-	-	0.962	0.952	0.918	0.889	0.864	0.842	0.822	0.803	0.785	0.769	0.754	0.74	0.726	0.713	0.701
600	-	-	0.964	0.958	0.922	0.892	0.867	0.844	0.823	0.804	0.787	0.77	0.755	0.74	0.727	0.714	0.702
650	-	-	0.968	0.958	0.927	0.896	0.869	0.846	0.825	0.806	0.788	0.771	0.756	0.741	0.728	0.715	0.702
700	-	-	-	0.958	0.931	0.899	0.872	0.848	0.827	0.807	0.789	0.772	0.757	0.742	0.728	0.715	0.703
750	-	-	-	0.958	0.936	0.903	0.875	0.85	0.828	0.809	0.79	0.774	0.758	0.743	0.729	0.716	0.703
800	-	-	-	0.96	0.942	0.906	0.878	0.852	0.83	0.81	0.792	0.774	0.759	0.744	0.73	0.716	0.704
850	-	-	-	0.962	0.947	0.91	0.88	0.855	0.832	0.812	0.793	0.776	0.76	0.744	0.73	0.717	0.704
900	-	-	-	0.965	0.953	0.914	0.883	0.857	0.834	0.813	0.794	0.777	0.76	0.745	0.731	0.718	0.705
950	-	-	-	0.969	0.958	0.918	0.886	0.86	0.836	0.815	0.796	0.778	0.761	0.746	0.732	0.718	0.705
1000	-	-	-	0.974	0.959	0.923	0.89	0.862	0.838	0.816	0.797	0.779	0.762	0.747	0.732	0.719	0.706
1050	-	-	-	-	0.96	0.927	0.893	0.864	0.84	0.818	0.798	0.78	0.763	0.748	0.733	0.719	0.707
1100	-	-	-	-	0.962	0.931	0.896	0.867	0.842	0.82	0.8	0.781	0.764	0.749	0.734	0.72	0.707
1150	-	-	-	-	0.964	0.936	0.899	0.87	0.844	0.821	0.801	0.782	0.765	0.749	0.735	0.721	0.708
1200	-	-	-	-	0.966	0.941	0.903	0.872	0.846	0.823	0.802	0.784	0.766	0.75	0.735	0.721	0.708
1250	-	-	-	-	0.969	0.946	0.906	0.875	0.848	0.825	0.804	0.785	0.767	0.751	0.736	0.722	0.709
1300	-	-	-	-	0.973	0.952	0.91	0.878	0.85	0.826	0.805	0.786	0.768	0.752	0.737	0.723	0.709
1350	-	-	-	-	0.977	0.958	0.914	0.88	0.852	0.828	0.807	0.787	0.769	0.753	0.737	0.723	0.71
1400	-	-	-	-	0.982	0.963	0.918	0.883	0.854	0.83	0.808	0.788	0.77	0.754	0.738	0.724	0.71
1450	-	-	-	-	0.987	0.968	0.922	0.886	0.857	0.832	0.809	0.79	0.771	0.754	0.739	0.724	0.711
1500	-	-	-	-	0.993	0.97	0.926	0.889	0.859	0.833	0.811	0.791	0.772	0.755	0.74	0.725	0.711
1550	-	-	-	-	-	0.972	0.93	0.892	0.861	0.835	0.812	0.792	0.773	0.756	0.74	0.726	0.712
1600	-	-	-	-	-	0.973	0.934	0.894	0.863	0.836	0.813	0.792	0.774	0.756	0.74	0.726	0.712
1650	-	-	-	-	-	0.973	0.936	0.895	0.863	0.836	0.812	0.791	0.772	0.755	0.739	0.724	0.71
1700	-	-	-	-	-	0.973	0.938	0.895	0.863	0.835	0.811	0.79	0.771	0.754	0.738	0.723	0.709
1750	-	-	-	-	-	0.974	0.94	0.896	0.862	0.835	0.81	0.789	0.77	0.752	0.736	0.721	0.707
1800	-	-	-	-	-	0.975	0.942	0.897	0.862	0.834	0.81	0.788	0.768	0.751	0.735	0.72	0.705
1850	-	-	-	-	-	0.976	0.944	0.897	0.862	0.833	0.809	0.787	0.767	0.749	0.733	0.718	0.704
1900	-	-	-	-	-	0.977	0.946	0.898	0.862	0.832	0.807	0.785	0.766	0.748	0.731	0.716	0.702
1950	-	-	-	-	-	0.979	0.949	0.898	0.861	0.832	0.806	0.784	0.764	0.746	0.729	0.714	0.7
2000	-	-	-	-	-	0.982	0.952	0.899	0.861	0.831	0.805	0.782	0.762	0.744	0.728	0.712	0.698
2050	-	-	-	-	-	0.985	0.954	0.899	0.86	0.83	0.804	0.781	0.761	0.742	0.726	0.71	0.696
2100	-	-	-	-	-	0.988	0.956	0.9	0.86	0.828	0.802	0.779	0.759	0.74	0.724	0.708	0.694
2150	-	-	-	-	-	-	0.956	0.9	0.859	0.827	0.801	0.778	0.757	0.738	0.722	0.706	0.692
2200	-	-	-	-	-	-	0.955	0.901	0.859	0.826	0.799	0.776	0.755	0.736	0.72	0.704	0.69
2250	-	-	-	-	-	-	0.954	0.901	0.858	0.825	0.797	0.774	0.753	0.734	0.717	0.702	0.687
2300	-	-	-	-	-	-	0.953	0.901	0.857	0.823	0.795	0.772	0.751	0.732	0.715	0.699	0.685
2350	-	-	-	-	-	-	0.952	0.902	0.856	0.822	0.794	0.769	0.748	0.729	0.712	0.697	0.682
2400	-	-	-	-	-	-	0.952	0.902	0.855	0.82	0.791	0.767	0.746	0.727	0.71	0.694	0.679
2450	-	-	-	-	-	-	0.951	0.902	0.854	0.818	0.789	0.765	0.743	0.724	0.707	0.691	0.677
2500	-	-	-	-	-	-	0.951	0.902	0.852	0.816	0.787	0.762	0.74	0.721	0.704	0.688	0.674
2550	-	-	-	-	-	-	0.951	0.902	0.851	0.814	0.784	0.759	0.738	0.718	0.701	0.685	0.671
2600	-	-	-	-	-	-	0.951	0.903	0.849	0.812	0.782	0.756	0.735	0.715	0.698	0.682	0.664
2650	-	-	-	-	-	-	0.952	0.903	0.848	0.809	0.779	0.754	0.731	0.712	0.695	0.679	0.664
2700	-	-	-	-	-	-	0.952	0.903	0.846	0.807	0.776	0.75	0.728	0.708	0.691	0.675	0.661
2750	-	-	-	-	-	-	0.953	0.903	0.844	0.804	0.773	0.747	0.724	0.705	0.687	0.671	0.657
2800	-	-	-	-	-	-	0.956	0.903	0.842	0.801	0.769	0.743	0.721	0.701	0.684	0.668	0.653
2850	-	-	-	-	-	-	0.959	0.902	0.839	0.798	0.766	0.739	0.717	0.697	0.679	0.663	0.649
2900	-	-	-	-	-	-	0.963	0.902	0.836	0.794	0.762	0.735	0.713	0.693	0.675	0.659	0.645
2950	-	-	-	-	-	-	-	0.902	0.834	0.79	0.758	0.731	0.708	0.688	0.671	0.655	0.64

Note

Note 1: For capacity on superheated steam, multiply saturated steam capacity by correction factor.

Note 2: Convert set pressure from (psig) to (psia) flowing pressure.

Note 3: psia flowing = [set pressure psig x overpressure] + 14.7

Valve Configuration Code

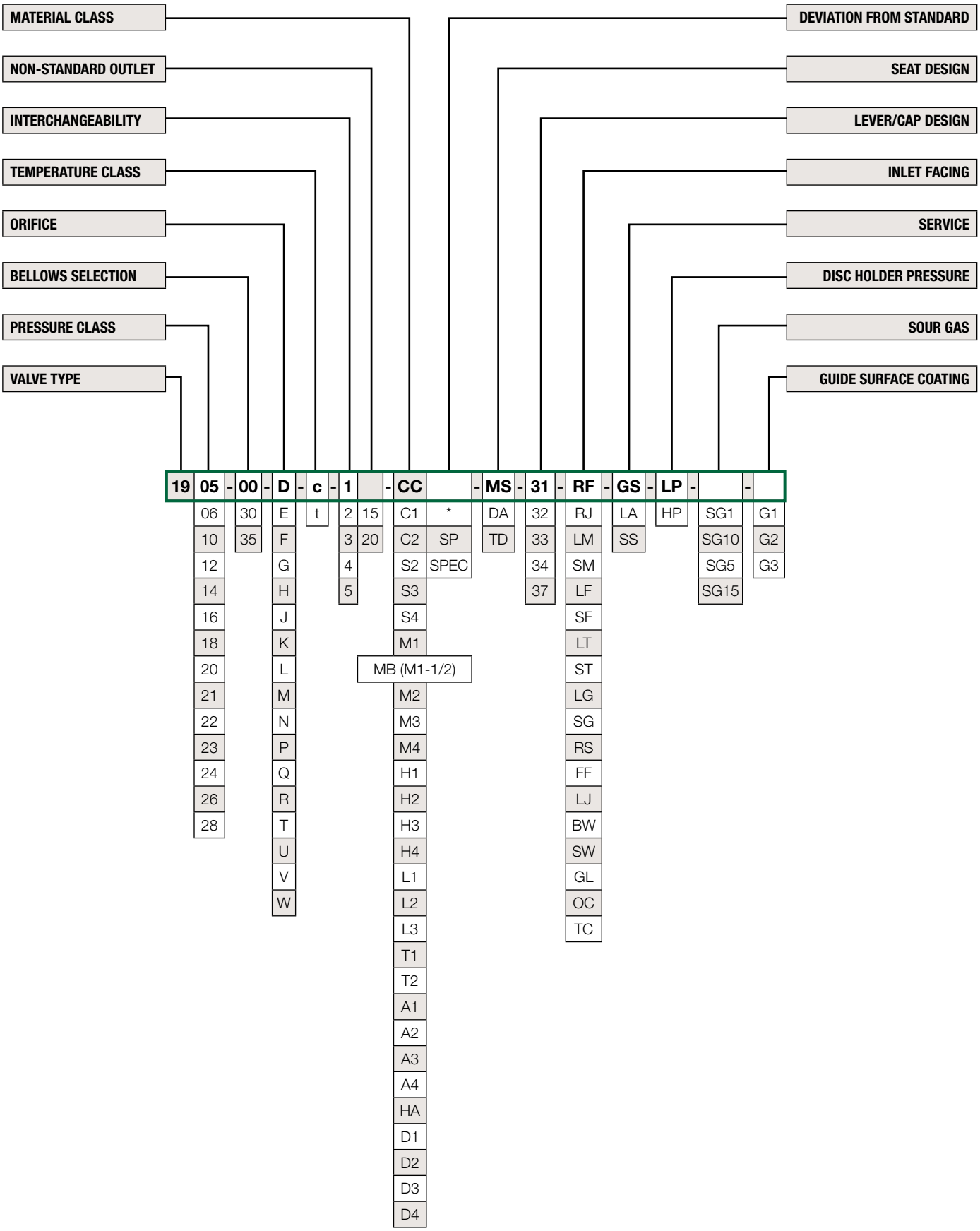

Valve Configuration Code (Contd.)

Pressure Class

Designation	Class
05	150
06	300
10	300
12	600
14	900
16	1500
18	2500
20	300
21 (-2T Only)	300
22	600
23 (P-2 Only)	900
24	900
26	1500
28	2500

Bellows Selection

Designation	Range
00	Non Bellows
30	Bellows
35	Balanced Bellows

Interchangeability Number

Designation	Valve Type
1 to 4	Numerical values vary by Orifice
5	Universal Media

Non-Standard Outlet

Designation	Type
	Standard Outlet Rating
15	Mating Outlet Flange
20	Full Rated Outlet

Seat Design

Designation	Type
MS	Metal Seat
DA	O-Ring
TD	Thermodisc

Standard Valve Connection

Orifice	Area (API)		Area (ASME)	
	in^2	cm^2	in^2	cm^2
D	0.110	0.710	0.128	0.825
E	0.196	1.265	0.228	1.470
F	0.307	1.981	0.357	2.302
G	0.503	3.245	0.585	3.774
H	0.785	5.065	0.913	5.888
J	1.287	8.303	1.496	9.652
K	1.838	11.858	2.138	13.794
L	2.853	18.406	3.317	21.400
M	3.600	23.226	4.186	27.006
N	4.340	28.000	5.047	32.561
P	6.380	41.161	7.417	47.852
Q	11.050	71.290	12.850	82.903
R	16.000	103.226	18.600	120.000
T	26.000	167.742	30.210	194.903
U	N/A	N/A	35.000	225.806
V	N/A	N/A	50.260	324.257
W	N/A	N/A	78.996	509.651

Temperature Range

Designation	Range
c	to 450°F (232.2°C)
t	451°F (232.8°C) & Above

Material Trim

Designation	Trim
CC	Standard Material
C1	Ambient Temp. to -50°F [LCC Construction]
C2	Ambient Temp. To -50°F [St. St. Construction]
S2	Stainless St. [Internals, Except Spring Assy.]
S3	Stainless St. [All except Spring Assy.]
S4	Stainless St. [Complete Valve]
M1	Monel [Nozzle & Disc]
MB (M1-1/2)	Monel [M1+Disc Holder, Adj. Ring & Ring Pin]
M2	Monel [Internals, except Spring Assy.]
M3	Monel [All except Spring Assy.]
M4	Monel [Complete Valve]
H1	Hastelloy C [Nozzle & Disc]
H2	Hastelloy C [Internals, except Spring Assy.]
H3	Hastelloy C [All except Spring Assy.]
H4	Hastelloy C [Complete Valve]
L1	Low Temperature Service [-21°F To -75°F]
L2	Low Temperature Service [-76°F To -150°F]
L3	Low Temperature Service [-151°F To -450°F]
T1	High Temperature Service [1001°F To 1200°F]
T2	High Temperature Service [1201°F To 1500°F]
A1	Alloy 20 [Nozzle & Disc]
A2	Alloy 20 [Internals, except Spring Assy.]
A3	Alloy 20 [All except Spring Assy.]
A4	Alloy 20 [Complete Valve]
HA	Hydrofluoric Acid [Anhydrous Hf Alky]
D1	Duplex [Nozzle & Disc]
D2	Duplex [Internals, except Spring Assy.]
D3	Duplex [All except Spring Assy., Stud/Nut & Bellows Assy.]
D4	Duplex [All except Stud/Nut & Bellows Assy.]

Valve Configuration Code (Contd.)

Lever/Cap Design

Designation	Type
31	Screwed
32	Bolted
33	Packed
34	Plain
37	Air Operated

Inlet Flange Facing

Designation	Facing
RF	Raised Face Serrated
RJ	Ring Joint
LM	Large Male
SM	Smalle Male
LF	Large Female
SF	Small Female
LT	Large Tongue
ST	Small Tongue
LG	Large Groove
SG	Small Groove
RS	Raised Face, Smooth
LJ	Lens Joint
BW	Butt Weld
SW	Socket Weld
GL	Grayloc
OC	Oteco
TC	Tri-Clamp

Service

Designation	Type
GS	Gas
LA	Liquid
SS	Steam

Disc Holder Pressure Design

Designation	Pressure Range
LP	Low Pressure
HP	High Pressure
Pressure Ranges vary per Orifice	

Sour Gas Applications

Designation	Type
SG1	Non-Bellows
SG10	Non-Bellows [Crca Spring]
SG5	Bellows
SG15	Bellows [Crca Spring]

Guide Surface Coating

Designation	Part Coated
G1	Glide-Aloy™ Disc Holder
G2	Glide-Aloy™ Guide
G3	Glide-Aloy™ Disc Holder and Guide

How to Order a 1900 Safety Relief Valve

Specification Sheet

	Page_____ of_____
Requisition No.	_____
Job No.	_____
Date	_____
Revised By	_____

General

1.	Item Number:
2.	Tag Number:
3.	Service, Line or Equipment No:
4.	Number Required:

Basis of Selection

5.	Code:
	❑ ASME Sec. I (1900/P series only)
	❑ ASME Sec. III
	❑ ASME Sec. VIII
	❑ OTHER Specify:
6.	Comply with API 526: ❑ YES ❑ NO
7.	❑ Fire ❑ OTHER Specify:
8.	Rupture Disk: ❑ YES ❑ NO

Valve Design

9.	Type: Safety Relief
10.	Design: ❑ Conventional ❑ Bellows
	❑ Closed Bonnet ❑ Yoke/Open Bonnet
	❑ Metal Seat ❑ Resilient Seat
	❑ API 527 Seat Tightness
	❑ OTHER Specify:

Connections

11.	Inlet Size:	Rating:	Facing:
	Outlet Size:	Rating:	Facing:
12.	❑ OTHER Specify:		

Materials

13.	Body/Bonnet:
14.	Guide/Rings:
15.	Seat Material:
	Metal:
	Resilient:
16.	Bellows:
17.	Spring:
18.	Comply with NACE MRO 175 ❑ YES ❑ NO
19.	❑ OTHER Specify:
20.	Cap and Lever Selection
	❑ Screwed Cap (Standard) ❑ Bolted Cap
	❑ Plain Lever ❑ Packed Lever ❑ Gag
21.	❑ OTHER Specify:

Service Conditions

22.	Fluid and State:
23.	Required Capacity per Valve & Units:
24.	Molecular Weight or Specific Gravity:
25.	Viscosity at Flowing Temperature & Units:
26.	Operating Pressure & Units:
27.	Blowdown: ❑ Standard ❑ Other
28.	Latent Heat of Vaporization & Units:
29.	Operating Temperature & Units:
30.	Relieving Temperature & Units:
31.	Built-up Back Pressure & Units:
32.	Superimposed Back Pressure & Units:
33.	Cold differential Test Pressure & Units:
34.	Allowable Overpressure in Percent or Units:
35.	Compressibility Factor, Z:
36.	Ratio of Specific Heats:

Sizing and Selection

37.	Calculated Orifice Area (square inches):
38.	Selected Orifice Area (square inches):
39.	Orifice Designation (letter):
40.	Manufacturer:
41.	Model Number:
42.	Vendor Calculations Required: ❑ YES ❑ NO

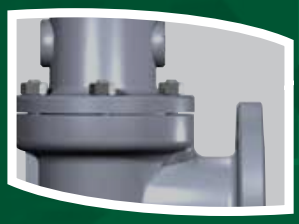

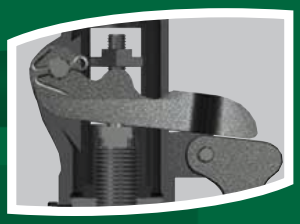

DRESSER Consolidated

Pressure Relief Valves



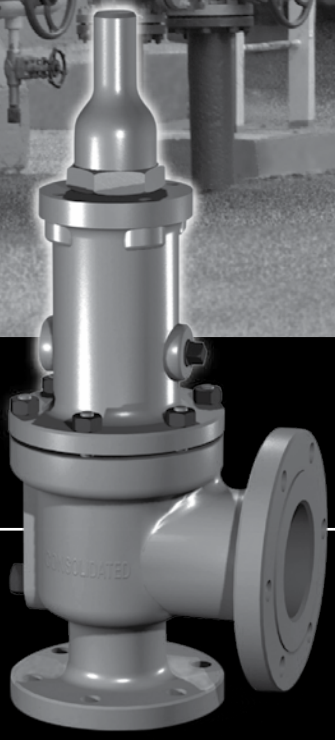

1900 Series - Maintenance Manual

Consolidated® Safety Relief Valve

Conversion Table

All the USCS values in the Manual is converted to Metric values using following convertion factors:

USCS Unit	Conversion Factor	Metric Unit*
in.	25.4	mm
lb.	0.4535924	kg
in^2	6.4516	cm^2
ft^3/min	0.2831685	m^3/min
gal/min	3.785412	L/min
lb/hr	0.4535924	kg/hr
psig	0.6894757	barg
ft lb	1.3558181	Nm
°F	5/9 (°F-32)	°C

* Multiply USCS value with Conversion Factor to get Metric value.

Table of Contents

Section	Subject	Page No
I.	Safety Sign and Label System	5
	Safety Alerts! Read - Understand - Practice .	5
II.	Terminology for Safety Relief Valves	7
III.	Introduction	8
IV.	Design Features and Nomenclature	8
V.	Consolidated 1900 Series Safety Relief Valve	9
VI.	Handling, Storage, and Pre-Installation	14
VII.	Recommended Installation Practices	15
	Mounting Position	15
	Inlet Piping	15
	Outlet Piping	16
VIII.	Disassembly Instructions	17
	General Information	17
	SRV Disassembly	17
IX.	Cleaning	20
X.	Parts Inspection	21
	Nozzle Inspection Criteria	21
	Nozzle Seat Width	21
	Nozzle Bore Inspection	21
	1900™ Series SRV Standard Disc Inspection Areas	21
	1900™ Series Thermodisc® Replacement Criteria	21
	Disc Holder Inspection Criteria	26
	Guide Inspection Criteria	29
	Spindle Inspection Criteria	29
	Spring Inspection Criteria	30
XI.	Maintenance	31
	General Information	31
	Lapping Nozzle Seats (Non-O-Ring Styles)	31
	Lapped Nozzle Seat Widths	31
	Lapping Disc Seats	32
	Precautions and Hints for Lapping Seats.	33
	Lapping O-Ring Seating Surfaces	34
	Reconditioning of Laps	34
	Re-Machining Nozzle Seats and Bores	35
	Re-Machining the Disc Seat	35
	Checking Spindle Concentricity	36
	Set Pressure Change-Disc Holder	36
	Checking Lift on Restricted Lift Valves	36

Table of Contents

Section	Subject	Page No
XII.	Reassembly	39
	General Information	39
	Preparation	39
	Lubrication	39
	Reassembly Procedure	39
XIII.	Setting and Testing	45
	General Information	45
	Test Equipment	45
	Test Media	45
	Setting the Valve	45
	Set Pressure Compensation	45
	Seat Tightness Testing	47
XIV.	Hydrostatic Testing and Gagging	49
XV.	Manual Popping of the Valve	49
XVI.	Conversion of 1900™ Series Flanged SRVs	50
	General Information	50
	Conversion from Conventional to Bellows Type	50
	Conversion from Bellows to Conventional Type	50
XVII.	Troubleshooting 1900™ Series SRVs	53
XVIII.	Maintenance Tools and Supplies	53
XIX.	Replacement Parts Planning	55
	Basic Guidelines	55
	Replacement Parts List	55
	Identification and Ordering Essentials	55
XX.	Genuine Dresser Parts	56
XXI.	Recommended Spare Parts for 1900™ Series SRVs	57
XXII.	Manufacturer's Warranty, Field Service, Training, and Repair Program	59
	Warranty Information	59
	Field Service	59
	Factory Repair Facilities	59
	SRV Maintenance Training	60
XXIII.	Self-Study Edition of the 1900™ Series SRV Maintenance Training Program	60
XXIV.	Optional Glide-Aloy™ Parts	61
XXV.	Sales Office Locations	62

I. Product Safety Sign and Label System

If and when required, appropriate safety labels have been included in the rectangular margin blocks throughout this manual. Safety labels are vertically oriented rectangles as shown in the ***representative examples*** (below), consisting of three panels encircled by a narrow border. The panels can contain four messages which communicate:

- The level of hazard seriousness
- The nature of the hazard
- The consequence of human, or product, interaction with the hazard.
- The instructions, if necessary, on how to avoid the hazard.

The top panel of the format contains a signal word (DANGER, WARNING, CAUTION or ATTENTION) which communicates the level of hazard seriousness.

The center panel contains a pictorial which communicates the nature of the hazard, and the possible consequence of human or product interaction with the hazard. In some instances of human hazards the pictorial may, instead, depict what preventive measures to take, such as wearing protective equipment.

The bottom panel may contain an instruction message on how to avoid the hazard. In the case of human hazard, this message may also contain a more precise definition of the hazard, and the consequences of human interaction with the hazard, than can be communicated solely by the pictorial.

① **DANGER — Immediate hazards which WILL result in severe personal injury or death.**

② **WARNING — Hazards or unsafe practices which COULD result in severe personal injury or death.**

③ **CAUTION — Hazards or unsafe practices which COULD result in minor personal injury.**

④ **ATTENTION — Hazards or unsafe practices which COULD result in product or property damage**

① ② ③ ④



I. Product Safety Sign and Label System (Contd.)

Safety Alerts! Read - Understand - Practice

Danger Alerts

A DANGER alert describes actions that may cause severe personal injury or death. In addition, it may provide preventive measures to avoid severe personal injury or death.

DANGER alerts are not all-inclusive. Dresser cannot know all conceivable service methods nor evaluate all potential hazards. Dangers include:

- High temperature/pressure can cause injury. Ensure all system pressure is absent before repairing or removing valves.
- Do not stand in front of a valve outlet when discharging. STAND CLEAR OF VALVE to avoid exposure to trapped, corrosive media.
- Exercise extreme caution when inspecting a pressure relief valve for leakage.
- Allow the system to cool to room temperature before cleaning, servicing, or repairing. Hot components or fluids can cause severe personal injury or death.
- Always read and comply with safety labels on all containers. Do not remove or deface container labels. Improper handling or misuse could result in severe personal injury or death.
- Never use pressurized fluids/gas/air to clean clothing or body parts. Never use body parts to check for leaks, flow rates, or areas. Pressurized fluids/gas/air injected into or near the body can cause severe personal injury or death.
- It is the owner's responsibility to specify and provide protective wear to protect persons from pressurized or heated parts. Contact with pressurized or heated parts can result in severe personal injury or death.
- Do not work or allow anyone under the influence of intoxicants or narcotics to work on or around pressurized systems. Workers under the influence of intoxicants or narcotics are a hazard to themselves and other employees. Actions taken by an intoxicated employee can result in severe personal injury or death to themselves or others.
- Always perform correct service and repair. Incorrect service and repair can result in product or property damage or severe personal injury or death.
- Always use the correct tool for a job. The misuse of a tool or the use of an improper tool can result in personal injury, damage to product or property.
- Ensure the proper "health physics" procedures are followed, if applicable, before starting operation in a radioactive environment.

Caution Alerts

A CAUTION alert describes actions that may result in a personal injury. In addition, they may describe preventive measures that must be taken to avoid personal injury. Cautions include:

- Heed all service manual warnings. Read installation instructions before installing valve(s).
- Wear hearing protection when testing or operating valves.
- Wear appropriate eye and clothing protection.
- Wear protective breathing apparatus to protect against toxic media.

II. Terminology for Safety Relief Valves

- Accumulation - the pressure increase over the maximum allowable working pressure of the vessel during discharge through the SRV, expressed as a percentage of that pressure or in actual pressure units.
- Backpressure - the pressure on the discharge side of the SRV:
  - Built-up Backpressure - the pressure that develops at the valve outlet, after the SRV has been opened, as a result of flow.
  - Superimposed Backpressure - the pressure in the discharge header before the SRV is opened.
  - Constant Backpressure - the superimposed backpressure that is constant with time.
  - Variable Backpressure - the superimposed backpressure that varies with time.
- Blowdown - the difference between set pressure and re-seating pressure of the SRV, expressed as a percentage of the set pressure or in actual pressure units.
- Cold Differential Set Pressure - the pressure at which the valve is adjusted to open on the test stand. This pressure includes the corrections for backpressure and/or temperature service conditions.
- Differential Between Operating and Set Pressures Valves in installed process services will generally give best results if the operating pressure does not exceed 90% of the set pressure. However, on pump and compressor discharge lines, the differential required between the operating and set pressures may be greater because of pressure pulsations coming from a reciprocating piston. The valve should be set as far above the operating pressure as possible.
- Lift - the actual travel of the disc away from the closed position when a valve is relieving.
- Maximum Allowable Working Pressure - the maximum gauge pressure permissible in a vessel at a designated temperature. A vessel may not be operated above this pressure, or its equivalent, at any metal temperature other than that used in its design. Consequently, for that metal temperature, it is the highest pressure at which the primary pressure SRV is set to open.
- Operating Pressure - the gauge pressure to which the vessel is normally subjected in service. A suitable margin is provided between operating pressure and maximum allowable working pressure. For assured safe operation, the operating pressure should be at least 10% under the maximum allowable working pressure or 5 psi (.34 bar), whichever is greater.
- Overpressure - a pressure increase over the set pressure of the primary relieving device. Overpressure is similar to accumulation when the relieving device is set at the maximum allowable working pressure of the vessel. Normally, overpressure is expressed as a percentage of set pressure.
- Rated Capacity - the percentage of measured flow at an authorized percent overpressure permitted by the applicable code. Rated capacity is generally expressed in pounds per hour (lb/hr) for vapors, standard cubic feet per minute (SCFM) or m3/min for gases, and in gallons per minute (GPM) for liquids.
- Relief Valve - an automatic pressure-relieving device, actuated by static pressure upstream from the valve. A relief valve is used primarily for liquid service.
- Safety Relief Valve (SRV) - an automatic pressure-relieving device used as either a safety or relief valve, depending upon application. The SRV is used to protect personnel and equipment by preventing excessive overpressure.
- Safety Valve - an automatic pressure-relieving device actuated by the static pressure upstream of the valve, and characterized by a rapid opening or “pop” action. It is used for steam, gas, or vapor service.
- Set Pressure - the gauge pressure at the valve inlet for which the relief valve has been adjusted to open under service conditions. In liquid service, the inlet pressure at which the valve starts to discharge determines set pressure. In gas or vapor service, the inlet pressure at which the valve pops determines the set pressure.
- Simmer - the audible passage of a gas or vapor across the seating surfaces just before “pop.” The difference between this start-to-open pressure and the set pressure is called “simmer.” Simmer is generally expressed as a percentage of set pressure.

III. Introduction

The safety relief valve (SRV) is an automatic, pressure-actuated relieving device suitable for use either as a safety valve or relief valve, depending on application.

SRVs are used on hundreds of different applications, including liquids and hydrocarbons; therefore, the valve is designed to meet many requirements.

The 1900™ Series valves included in this manual may be used to meet the requirements for ASME Section III and Section VIII. They cannot be used on ASME Code Section I steam boilers or superheaters, but may be used on process steam.

IV. Design Features and Nomenclature

Cap and Lever Interchangeability

In the field, it is often necessary to change the type of cap or lever after a valve has been installed. All flanged Consolidated® SRVs are designed to be converted to any type of lever or cap desired. It is not necessary to remove the SRV from the installation, nor will the set pressure be affected when making such a change.

Design Simplicity

Consolidated® SRVs have few component parts, resulting in savings by minimizing spare parts inventory and simplifying valve maintenance.

Nomenclature Related to Design Features

The nomenclature of the components of 1900™ Series valves, including those with design options for universal media, universal media soft-seat bellows, O-ring seat, liquid trim, and Thermodisc®, is identified in Figures 1 through 10.

Simple Blowdown Adjustment

The Consolidated® single blowdown ring design makes it possible to set and test a valve at the customer's shop when it is impractical to set and media may be very low, the ring can be positioned so that the set point can be observed without damaging the valve. Blowdown can be attained by positioning the ring in accordance with the adjusting ring position (see Tables 12 through 14).

Valve Interchangeability

A standard Consolidated® SRV may be converted to the universal media, universal media soft-seat bellows type, the O-ring seat seal type, etc., and vice versa. Should conversion be required, this interchangeability lowers costs and requires fewer new parts than replacing entire valve types.

V. Consolidated® 1900 Series Safety Relief Valve

V.1 Metal Seat Valve

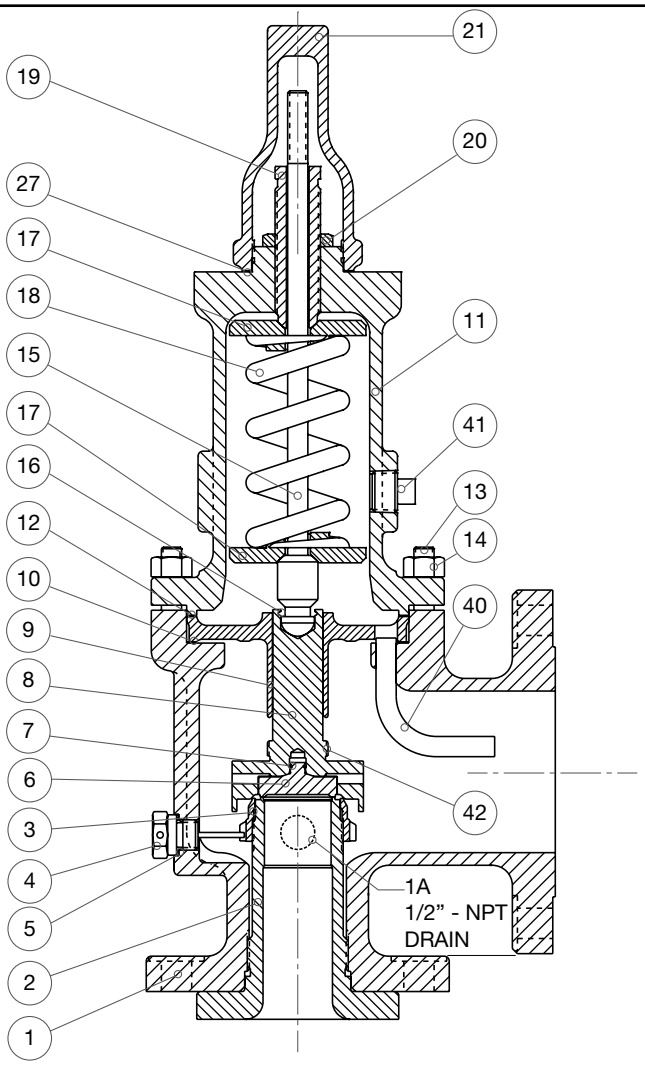

Figure 1: Conventional Metal Seat Valve

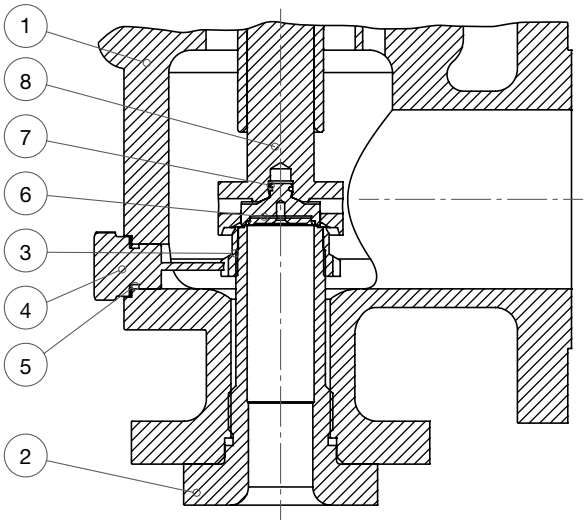

Figure 2: UM Metal Seat Valve

Part No.	Nomenclature
1	Base
2	Nozzle
3	Adjusting Ring
4	Adjusting Ring Pin
5	Adjusting Ring Pin Gasket
6	Disc
7	Disc Retainer
8	Disc Holder
9	Guide
10	Guide Gasket
11	Bonnet
12	Bonnet Gasket
13	Base Stud
14	Stud Nut
15	Spindle
16	Spindle Retainer
17	Spring Washer
18	Spring
19	Adjusting Screw
20	Adjusting Screw Locknut
21	Screwed Cap
27	Cap Gasket
40	Eductor Tube
41	Bonnet Plug
42	Limit Washer

V. (Contd.)

V.1.1 Standard Cap Types

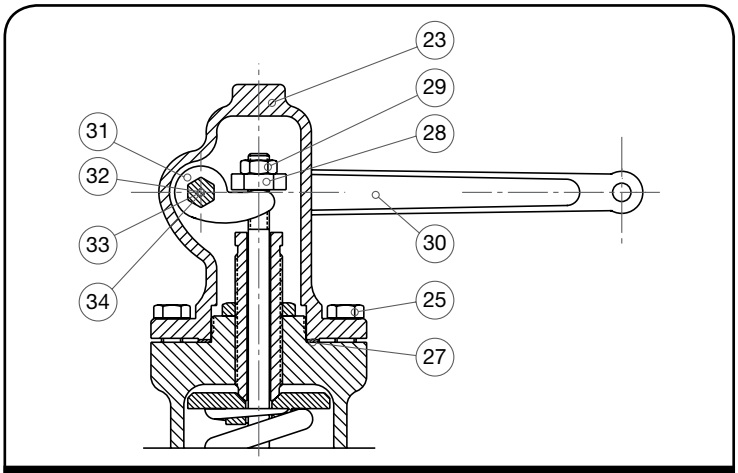

Figure 3: Packed Cap

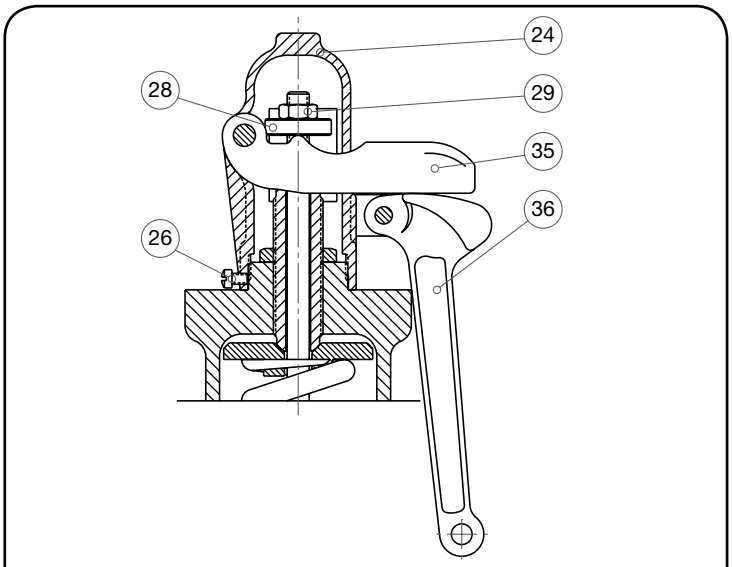

Figure 4: Plain Cap

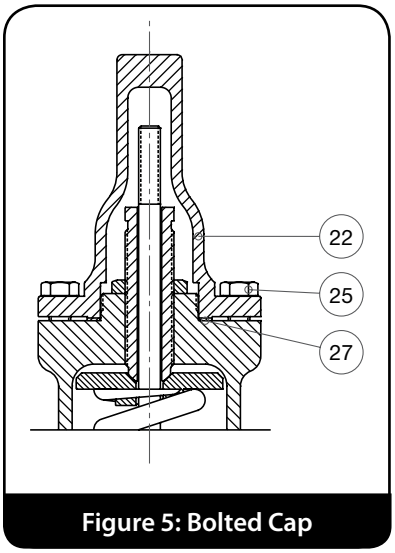

Figure 5: Bolted Cap

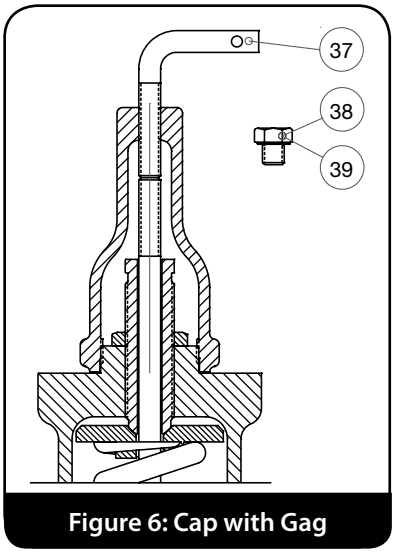

Figure 6: Cap with Gag

Part No.	Nomenclature
22	Bolted Cap
23	Packed Cap
24	Plain Cap
25	Cap Bolt
26	Cap Set Screw
27	Cap Gasket
28	Release Nut
29	Release Locknut
30	Lever
31	Lifting Fork
32	Lever Shaft
33	Packing
34	Packing Nut
35	Top Lever
36	Drop Lever
37	Gag
38	Sealing Plug
39	Sealing Plug Gasket

V. (Contd.)

V.2 Bellows Metal Seat Valve

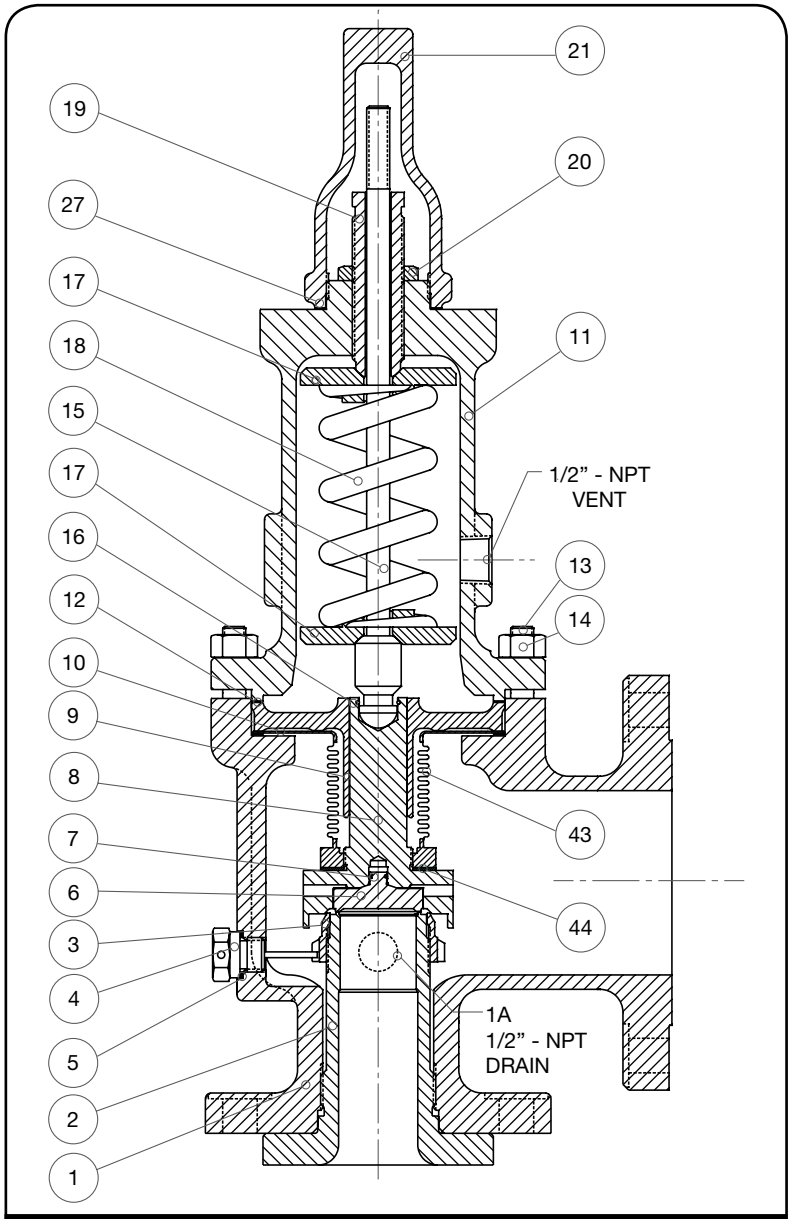

Figure 7: Bellows Metal Seat Valve Construction

Part No.	Nomenclature
1	Base
1A	Base Plug
2	Nozzle
3	Adjusting Ring
4	Adjusting Ring Pin
5	Adjusting Ring Pin Gasket
6	Disc
7	Disc Retainer
8	Disc Holder
9	Guide
10	Guide Gasket
11	Bonnet
12	Bonnet Gasket
13	Base Stud
14	Stud Nut
15	Spindle
16	Spindle Retainer
17	Spring Washer
18	Spring
19	Adjusting Screw
20	Adjusting Screw Locknut
21	Screwed Cap
27	Cap Gasket
43	Bellows
44	Bellows gasket

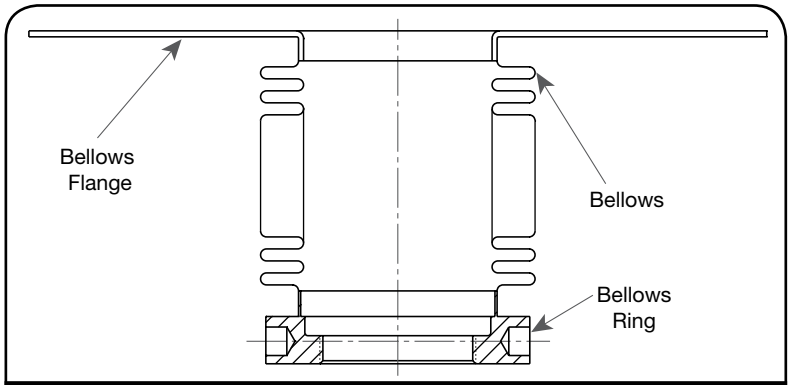

Figure 8: Bellows Assembly

V. (Contd.)

V.3 V-W Bellows Metal Seat Valve

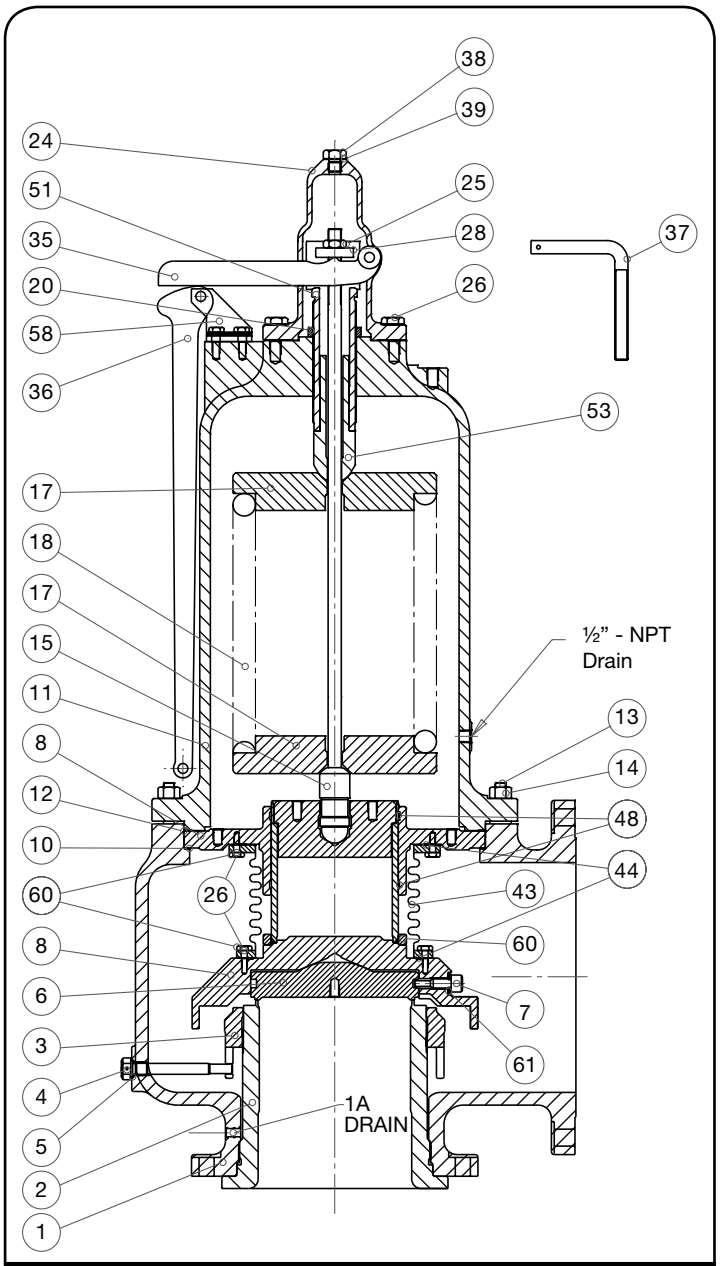

Figure 9: V & W Orifice Valve Construction

Part No.	Nomenclature
1	Base
2	Nozzle
3	Adjusting Ring
4	Adjusting Ring Pin
5	Adjusting Ring Pin Gasket
6	Disc
7	Disc Retainer
8	Disc Holder
9	Guide
10	Guide Gasket
11	Bonnet
12	Bonnet Gasket
13	Base Stud
14	Stud Nut
15	Spindle
16	Spindle Retainer
17	Spring Washer
18	Spring
19	Adjusting Screw
20	Compression Screw Locknut
24	Plain Cap
25	Cap Bolt
26	Cap Set Screw
27	Cap Gasket
28	Release Gasket
35	Top Lever
36	Drop Lever
37	Gag
38	Sealing Plug
39	Sealing Plug Gasket
43	Bellows
44	Bellows gasket
48	Guide RIngs
51	Compression Screw
53	Spring Plunger
58	Clevis
59	Eye Bolt
60	Lockscrew Washer (Bellows)
61	Retainer Screw Lockwasher

V. (Contd.)

V.4 Soft Seat Valve

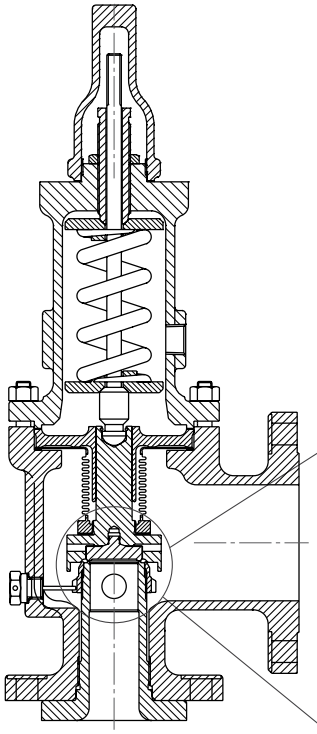

Conventional O-Ring Soft Seat Valve

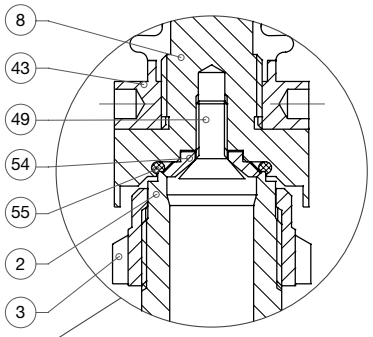

Figure 10a: D - J Orifice

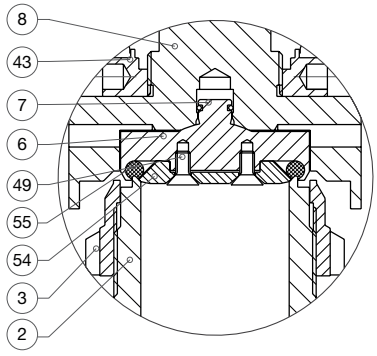

Figure 10b: K-T Orifice

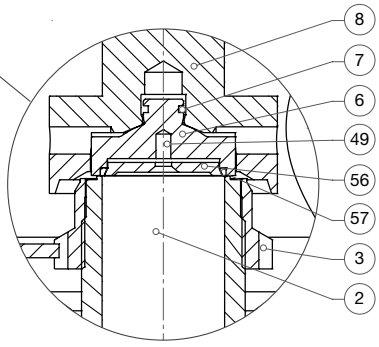

Figure 10c: UM Teflon Seal

Part No.	Nomenclature
2	Nozzle
3	Adjusting Ring
6	Disc
7	Disc Retainer
8	Disc Holder
43	Bellows
49	Disc Retainer Screws
54	O-Ring Retainer
55	O-Ring Seat Seal
56	Soft Seat retainer
57	Teflon Steel

Figure 10: Soft Seat Valve Construction

VI. Handling, Storage, and Pre-Installation

Handling

Always keep the inlet flang down on a crated or un-crated flang valve to prevent misalignment and damage to valve internals.

ATTENTION!

Never lift the full weight of the valve by the lifting lever.

ATTENTION!

Do not rotate the valve horizontally or lift/carry using the lifting lever.

Wrap a chain or sling around the discharge neck and around the upper bonnet structure to move or hoist an uncrated valve. Ensure the valve is in a vertical position during the lift.

ATTENTION!

Handle carefully. Do not drop or strike the valve.

Do not subject SRVs, either crated or uncrated, to sharp impact. Ensure that the valve is not bumped or dropped during loading or unloading from a truck. While hoisting the valve, take care to prevent bumping the valve against steel structures and other objects.

ATTENTION!

Prevent dust and debris from entering inlet or outlet of the valve.

Storage

Store SRVs in a dry environment and protect them from the weather. Do not remove the valve from the skids or crates until immediately before installation.

Do not remove flang protectors and seating plugs until the valve is ready to be bolted into place during the installation.

Pre-Installation

When SRVs are uncrated and the flang protectors or sealing plugs are removed, exercise meticulous care to prevent dirt and other foreign materials from entering the inlet and outlet ports while bolting the valve in place.v

VII. Recommended Installation Practices

⚠ DANGER

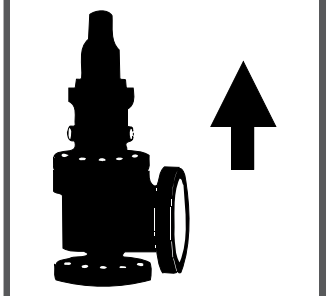

Mount safety relief valves in a vertical, upright position only.

⚠ DANGER

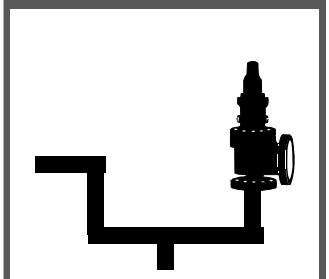

Do not mount valve at the end of pipe through which there is normally no flow or near elbows, tees, bends, etc.

⚠ CAUTION

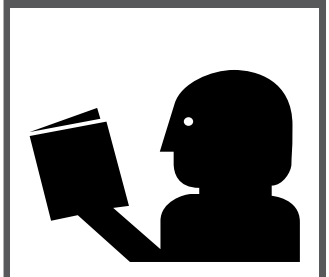

Heed all service manual warnings. Read installation instructions before installing valve(s).

Mounting Position

Mount SRVs in a vertical (upright) position (in accordance with API RP 520). Installing a safety relief valve in any position other than vertical (±1 degree) will adversely affect its operation as a result of the induced misalignment of moving parts.

A stop valve may be placed between the pressure vessel and its relief valve only as permitted by code regulations. If a stop valve is located between the pressure vessel and SRV, the stop valve port area should equal or exceed the nominal internal area associated with the pipe size of the SRV inlet. The pressure drop from the vessel to the SRV shall not exceed 3% of the valve's set pressure, when flowin at full capacity.

Ensure the flange and sealing faces of the valve and connective piping are free from dirt, sediment, and scale.

Ensure all flang bolts are drawn evenly to prevent distortion of the valve body and the inlet nozzle.

Position SRVs for easy access and/or removal so that servicing can be properly performed. Ensure sufficien working space is provided around and above the valve.

Inlet Piping

The inlet piping (see Figure 11) to the valve should be short and directly from the vessel or equipment being protected. The radius of the connection to the vessel should permit smooth flo to the valve. Avoid sharp corners. If this is not practical, then the inlet should be at least one additional pipe diameter larger.

The pressure drop from the vessel to the valve shall not exceed 3% of valve set pressure when the valve is allowing full capacity flo. The inlet piping should never be smaller in diameter than the inlet connection of the valve. Excessive pressure drop in gas, vapor, or flashing-liqui service at the inlet of the SRV will cause the extremely rapid opening and closing of the valve, which is known as "chattering." Chattering will result in lowered capacity and damage to the seating surfaces. The most desirable installation is that in which the nominal size of the inlet piping is the same as, or greater than, the nominal size of the valve inlet flange and in which the length does not exceed the face-to-face dimensions of a standard tee of the required pressure class.

Do not locate SRV inlets where excessive turbulence is present, such as near elbows, tees, bends, orifice plates or throttling valves.

Section VIII of the ASME Boiler and Pressure Vessel Code requires the inlet connection design to consider stress conditions during valve operation, caused by external loading, vibration, and loads due to thermal expansion of the discharge piping.

The determination of reaction forces during valve discharge is the responsibility of the vessel and/or piping designer. Dresser publishes certain technical information about reaction forces under various flui flo conditions, but assumes no liability for the calculations and design of the inlet piping.

External loading, by poorly designed discharge piping and support systems, and forced alignment of discharge piping can cause excessive stresses and distortions in the valve as well as the inlet piping. The stresses in the valve may cause a malfunction or leak. Therefore, discharge piping must be independently supported and carefully aligned.

Vibrations in the inlet piping systems may cause valve seat leakage and/or fatigue

VII. Recommended Installation Practices (Contd.)

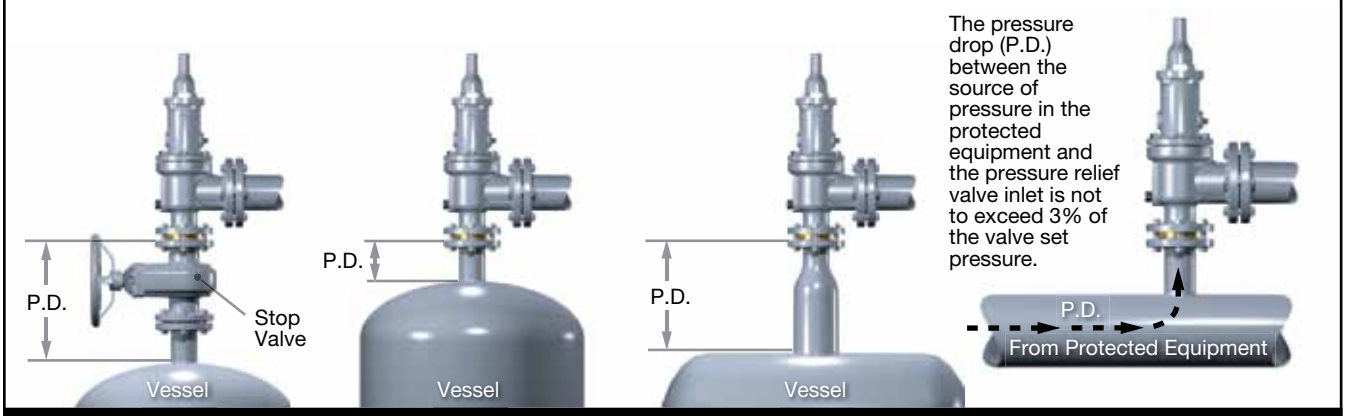

Figure 11: Pressure Drop on the Inlet Piping

failure. These vibrations may cause the disc seat to slide back and forth across the nozzle seat and may result in damage to the seating surfaces. Also, vibration may cause separation of the seating surfaces and premature wear to valve parts. High-frequency vibrations are more detrimental to SRV tightness than low-frequency vibrations. This effect can be minimized by providing a larger difference between the operating pressure of the system and the set pressure of the valve, particularly under high frequency conditions.

Temperature changes in the discharge piping may be caused by flui flowin from the discharge of the valve or by prolonged exposure to the sun or heat radiated from nearby equipment. A change in the discharge piping temperature will cause a change in the length of the piping, which may cause stresses to be transmitted to the SRV and its inlet piping. Proper support, anchoring or provision for flexibilit of the discharge piping can prevent stresses caused by thermal changes. Do not use fixe supports.

Outlet Piping

Alignment of the internal parts of the SRV is important to ensure proper operation (see Figure 12). Although the valve body will withstand a considerable mechanical load, unsupported discharge piping consisting of more than a companion flange long-radius elbow, and a short vertical pipe is not recommended. Use spring supports to connect outlet piping to prevent thermal expansion from creating strains on the valve. The discharge piping should be designed to allow for vessel expansion as well as expansion of the discharge pipe itself. This is particularly important on long distance lines.

A continual oscillation of the discharge piping (wind loads) may induce stress distortion in the valve body. The resultant movement of the valve's internal parts may cause leakage.

Where possible, use properly supported drainage piping to prevent the collection of water or corrosive liquid in the valve body.

When two or more valves are piped to discharge into a common header, the built-up backpressure resulting from the opening of one (or more) valve(s) may cause a superimposed backpressure in the remaining valves. Under these conditions, the use of bellows valves is recommended. The use of bellows valves may also permit the use of a smaller-size manifold.

In every case, the nominal discharge pipe size should be at least as large as the nominal size of the SRV outlet flange In the case of long discharge piping, the nominal discharge pipe size must sometimes be much larger.

ATTENTION!

All non-bellows valves should have a bonnet plug installed. Bellows valves must have an open bonnet vent.

VIII. Disassembly Instructions

⚠ CAUTION



Wear necessary protective equipment to prevent possible injury

⚠ DANGER



Before disassembling the valve, ensure there is no media pressure in the vessel.

⚠ CAUTION

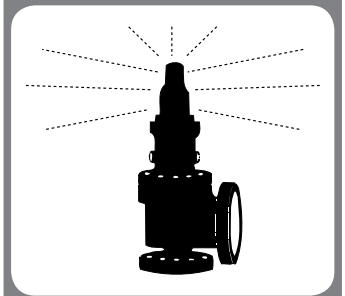

Valve caps and bonnets can trap fluids. Use caution when removing to prevent injury or environmental damage.

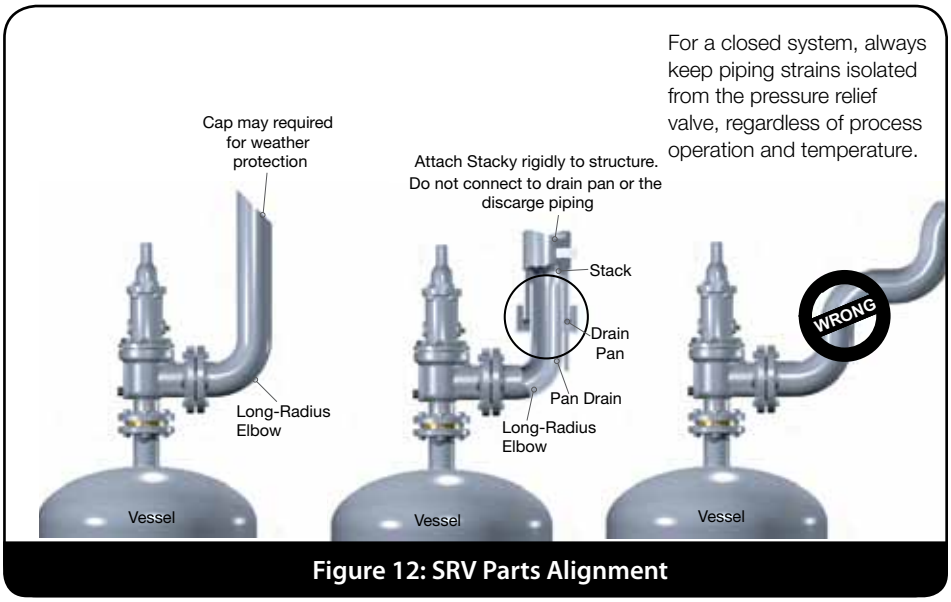

Figure 12: SRV Parts Alignment

General Information

Consolidated® SRVs can be easily disassembled for inspection, the reconditioning of seats or the replacement of internal parts. Appropriate set pressure can be established after reassembly. (See Figures 1 through 10 for parts nomenclature.)

ATTENTION!

Do not interchange parts from one valve with parts from another valve.

⚠ DANGER

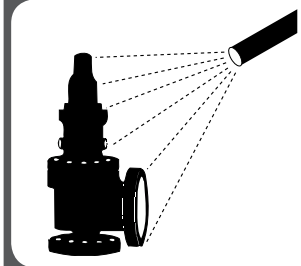

Many pressure vessels protected by Consolidated® Safety Relief Valves contain dangerous materials. Decontaminate and clean the valve inlet, outlet, and all external surfaces in accordance with the cleaning and decontaminating recommendations in the appropriate Material Safety Data Sheet.

SRV Disassembly

1. If equipped, remove the lifting lever gear as follows:
   - Plain Lever (see Figure 40)
     - Remove cotter pin, lever pin and plain lever [one-piece design] or top lever [two-piece design].
   - Packed Lever (see Figures 41 and 42)
     - Disassembly not required. Rotate lever counterclockwise, positioning lifting fork so that it clears release nut during cap removal.
2. Remove the cap.
3. Remove the cap gasket (27), if applicable.
4. Remove adjusting ring pin (4) and adjusting ring pin gasket (5).
5. If the existing blowdown is to be restored upon reassembly, determine the position of the adjusting ring (3) with respect to the disc holder (8) as follows:
   - Turn the adjusting ring counterclockwise (move notches on the adjusting ring from left to right).
   - Record the number of notches that pass the ring pinhole before the ring contacts the disc holder.

VIII. Disassembly Instructions (Contd.)

ATTENTION!

This procedure does not substitute for actual pressure testing.

6. Follow the procedure appropriate to the orifice valve type:
   - Using a depth micrometer or a dial caliper, measure the distance from the top of the spindle (15) to the top of the adjusting screw (19). This allows the adjusting screw to be readjusted close to the proper spring compression without excessive testing.
   - Record the measurement for reference when reassembling the valve.
   - D through U orifice valves:
     - Loosen the adjusting screw locknut (20).
     - Remove the adjusting screw from the bonnet (11). Use pliers to prevent the spindle from turning when removing the adjusting screw.
   - V and W orifice valves:
     - Attach the setting device (see Figure 13).
     - Apply enough pressure to the plunger using the ram to free the adjusting screw.
     - Loosen the adjusting screw locknut.
     - Completely unscrew the adjusting screw from the bonnet.

ATTENTION!

Set the valve using the setting procedures after reassembly.

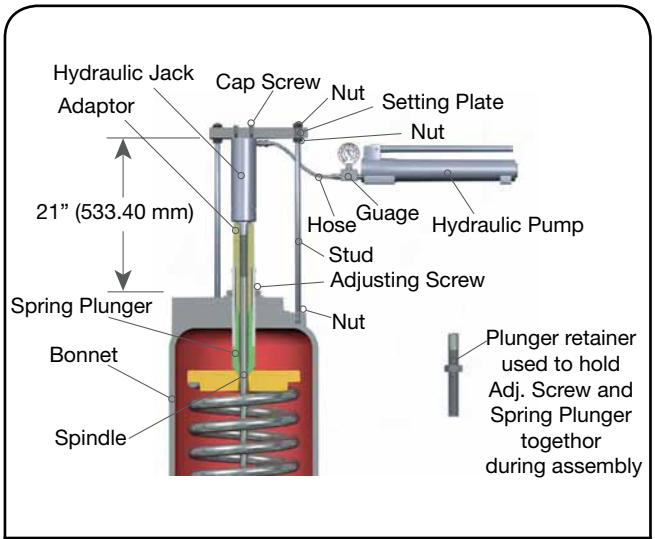

Figure 13: Setting Device for V and W Orifice

7. Remove the stud nuts (14) and lift off the bonnet (11).
8. Remove the bonnet gasket (12).
9. Remove the spring (18) and the spring washers (17). Keep the spring and spring washers together, as a unit, at all times.
10. Follow the procedure appropriate to the valve type:
    - D through L orifice valves:
      - Remove the upper internal parts by carefully pulling "straight up" on the spindle (15). For bellows valves, take care to avoid damaging the bellows or its flange If parts are fouled use a suitable solvent for loosening the components.
      - Clamp the skirt portion of the disc holder (8) snugly between two wooden V-blocks in a suitable vise.
      - Compress the spindle retainer (16) with a screwdriver or similar tool through the slots provided and remove the spindle.

ATTENTION!

Special lifting tools are available for ease of upper internal part removal

    - M through U orifice valves:
      - Use a screwdriver to compress the spindle retainer (16).
      - Remove the spindle (15).
      - Insert the lifting tool (see Figure 10a) into the disc holder spindle pocket and tighten the eyebolt.
      - Remove the disc holder (8) and disc (6) by lifting up on the lifting tool.
    - Valve V and W orifice valve:
      - Use the lifting lugs to lift the disc holder (8) and to remove all internals (see Figure 14b).
11. Remove the guide (9) from the disc holder (8). (For restricted lift valves, see Checking Lift on Restricted Lift Valves. For V and W orifice unbolt the bellows from guide before guide removal.
12. For D through U orifice bellows valves (see Figure 7), the bellows is attached to the disc holder (8) by right-hand threads. Use a special spanner wrench on the bellows ring to remove it by turning counterclockwise (see Figure 15).

VIII. Disassembly Instructions (Contd.)

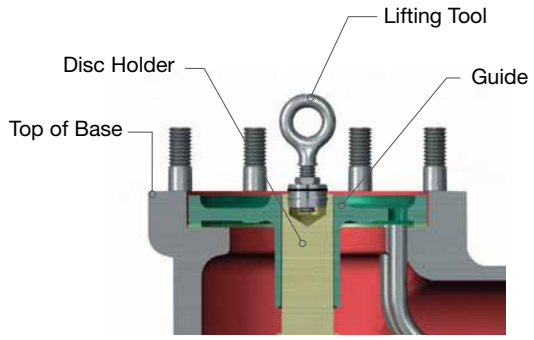

Figure 14a: Lifting Tools for M through U Orifice Valves

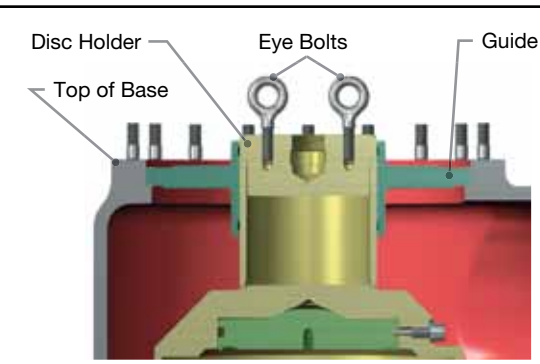

Figure 14b: Lifting Lug for V and W Orifice

ATTENTION!

The bellows convolutions (see Figure 15) are very thin and fragile. Take care to protect them from damage.

13. Remove the bellows gasket. For V and W orifice bellows valves (see Figure 6), the bellows is bolted to the disc holder (8). Remove these bolts to disassemble the bellows from the disc holder.

14. Follow the procedure appropriate to the orifice valve type:

    - For D through U orifice valves (see Figure 7), remove the disc (6) from the disc holder (8) as follows:
        - Grasp disc holder by the stem portion, disc end down, and firml strike down onto a clean, wood surface. Disc should dislodge from disc holder.
        - If disc did not dislodge from disc holder, then clamp the stem portion of the disc holder, disc end p, firml between two wooden V-blocks in a vise.

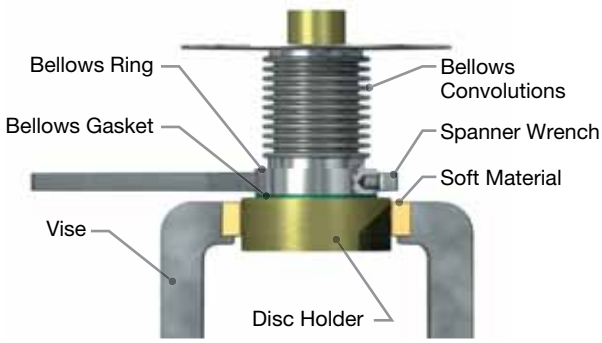

Figure 15: Removing the Bellows Ring

        - Start inserting special drift pins into the holes in the disc holder (see Figure 16) with the tapered portion of the pins working against the top of the disc, as indicated.
        - Use a light machinist hammer to tap each pin alternately until the disc snaps out of the recess in the disc holder.
    - For V and W orifice valves (see Figure 9), remove the disc from the disc holder as follows:
        - Turn the disc holder on its side.
        - Remove the retaining bolts.
        - Attach the lifting lug to the disc and lift out.
        - Inspect guide rings for wear and replace if necessary.

15. For O-ring seat seal and universal media soft-seal valves only (See Figures 10a, 10b &10c), remove the retainer lock screw (s), retainer, and O-ring or Telfon seal

16. Remove the adjusting ring (3) by turning it counterclockwise (from left to right).

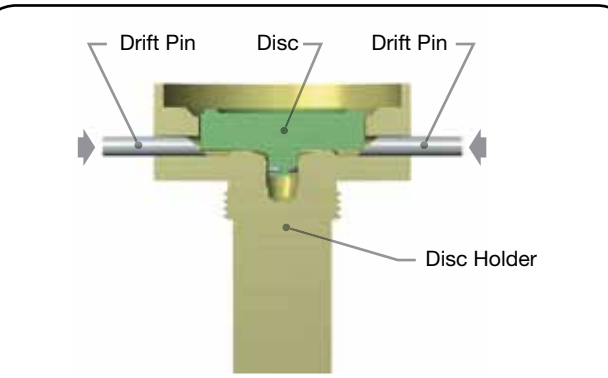

Figure 16: Removing the Disc with Drift Pins

VIII. Disassembly Instructions (Contd.)

ATTENTION!

The nozzle (2) is normally removed for routine maintenance and service.

17. The nozzle (2) is threaded onto the base (1) and is removed by turning it counterclockwise (from right to left). Before removing the nozzle, soak the threaded joint with a suitable penetrating liquid or solvent. If the nozzle is frozen to the base, apply dry ice or other cooling medium to the inside of the nozzle and heat the base from the outside with a blowtorch in the area of the nozzle threads.

ATTENTION!

Should heat be applied, use care to prevent cracking of cast parts.

18. Using a three- or four-jaw chuck welded vertically to a stand bolted to a concrete floor, clamp the nozzle (2) into the chuck and break the body loose with a heavy rod or pipe (see Figure 17).

ATTENTION!

Exercise care when inserting a rod or pipe in the outlet. Ensure the valve nozzle is not damaged during the operation.

19. Use a large pipe wrench on the nozzle flang to remove the nozzle (2) from the base (1) (see Figure 18).

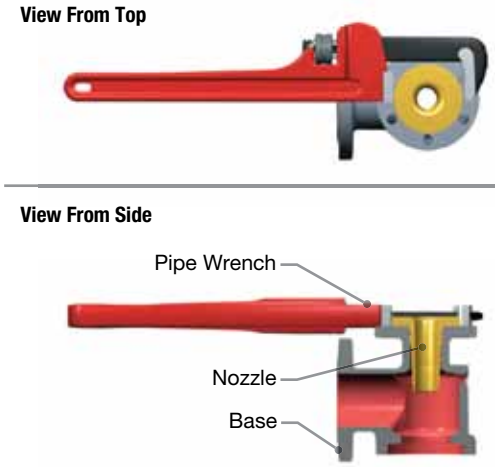

Figure 18: Removing the Nozzle from the Base

IX. Cleaning

1900™ Series SRV internal parts may be cleaned with industrial solvents, cleaning solutions, and wire brushes. If cleaning solvents are used, take precautions to protect yourself from potential danger from fume inhalation, chemical burns, or explosion. See the solvent's Material Safety Data Sheet (MSDS) for safe handling recommendations and equipment.

Do not sandblast internal parts because it can reduce the dimensions of the parts. The base (1), bonnet (11), and screwed cap (21) may be sandblasted, but take care not to erode internal surfaces or damage machined surfaces.

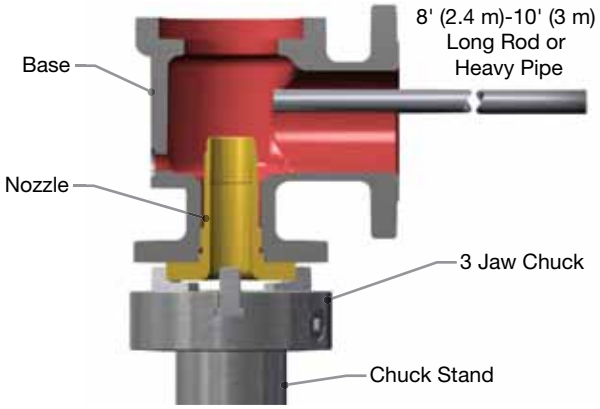

Figure 17: Loosening the Nozzle from the Base



X. Parts Inspection

Nozzle Inspection Criteria

Nozzle should be replaced if:

- Dimension from seat to first thread, after re-machining and lapping, is less than D min. (see Table 1).
- Threads are damaged from pitting and/or corrosion.
- Top of flang and intersecting surface are damaged from galling and/or tearing.
- Seat width is outside specification (see Tables 7a, 7b or 7c).

Nozzle Seat Width

Using a measuring magnifying glass (see Lapped Nozzle Seat Widths), determine whether the seating surface must be machined before lapping. If the seat can be lapped flat without exceeding the required seat width (see Tables 7a, 7b or 7c), it does not require machining. To reduce the seat width, the 5º angle surface must be machined. The nozzle must be replaced if the D dimension is reduced below the minimum (see Table 1).

ATTENTION!

Flange thickness changes the center-to-face dimension. Ensure the minimum dimension for orifice D through P is .656" (16.67 mm), and for Q through W is .797" (20.24 mm).

Nozzle Bore Inspection

All 1900™ Series SRV nozzles manufactured after August 1978 have increased bore diameters. Original and new nozzles are interchangeable, but the rated capacities are different (see Table 2).

1900™ Series SRV Standard Disc Inspection Areas

The standard 1900™ Series disc (see Figure 20) can be machined until the N dimension is reduced to its minimum size (see Table 3). The T dimension is provided to ensure the disc has not been machined beyond its limits. If re-machining reduces the thickness of the disc (T min.), the entire disc holder assembly drops with respect to the seating plane of the nozzle. This creates a significant change in the huddle chamber configuration and results in significantly more simmer before opening.

1900™ Series Thermodisc® Replacement Criteria

The Thermodisc® must be replaced if:

- Seat defects and damage cannot be lapped out without reducing the A dimension below those listed in Table 4 (see Figure 21).

ATTENTION!

The A dimension on orifice D through H is difficult to measure. If the .006" (0.15 mm) minimum thickness of the thermal lip cannot be measured, replace the Thermodisc®.

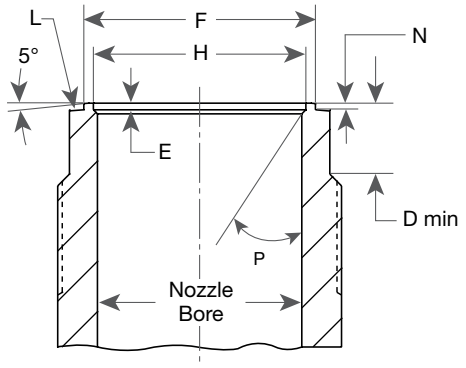

Figure 19a: Metal Seated Nozzle

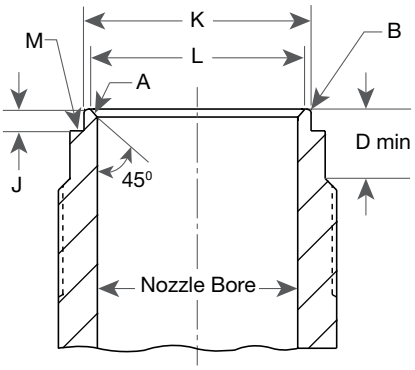

Figure 19b: O-Ring Seal Nozzle

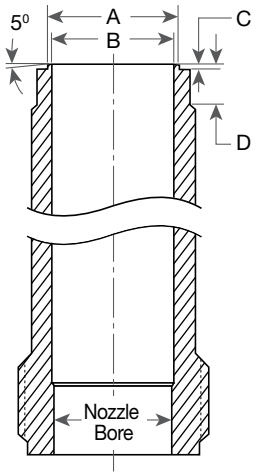

Figure 19c: Soft-Seat O-Ring Nozzle

Figure 19: Metal Seated and O-Ring Nozzles

X. Parts Inspection (Contd.)

Table 1a: Nozzle Critical Dimensions (Metal Seated Nozzle)

Orifice	D min.		E ± .005" (±0.13 mm)		F		H		N		P ±0.5°
	in.	mm	in.	mm	in.	mm	in.	mm	in.	mm	
D-2, E-2, F	.399	10.13	.030	0.76	.954 ± .001	24.23 ± 0.03	.831 ± .001	21.11 ± 0.03	.038 $^{+.002}_{-.003}$	0.97 $^{+0.05}_{-0.08}$	30°
G	.399	10.13	.035	0.89	1.093 ± .001	27.76 ± 0.03	.953 ± .001	24.21 ± 0.03	.037 $^{+.003}_{-.002}$	0.94 $^{+0.08}_{-0.05}$	30°
H	.305	7.75	.035	0.89	1.224 ± .001	31.09 ± 0.03	1.123 ± .001	28.52 ± 0.03	.035 $^{+.002}_{-.003}$	0.89 $^{+0.05}_{-0.08}$	45°
J	.430	12.50	.035	0.89	1.545 ± .001	39.24 ± 0.03	1.435 ± .001	36.45 ± 0.03	.035 ± .005	0.89 ± 0.13	45°
K	.492	12.50	.063	1.60	1.836 ± .002	46.63 ± 0.05	1.711 ± .002	43.46 ± 0.05	.063 ± .005	1.60 ± 0.13	45°
L	.492	12.50	.063	1.60	2.257 ± .002	57.33 ± 0.05	2.133 ± .002	54.18 ± 0.05	.063 ± .005	1.60 ± 0.13	45°
M	.492	12.50	.063	1.60	2.525 ± .002	64.14 ± 0.05	2.4 ± .002	60.96 ± 0.05	.063 ± .005	1.60 ± 0.13	45°
N	.555	14.10	.063	1.60	2.777 ± .002	70.54 ± 0.05	2.627 ± .002	66.73 ± 0.05	.063 ± .005	1.60 ± 0.13	45°
P	.680	17.27	.093	2.36	3.332 ± .002	84.63 ± 0.05	3.182 ± .002	80.82 ± 0.05	.093 ± .005	2.36 ± 0.13	45°
Q	.930	23.62	.093	2.36	4.335 ± .003	110.11 ± 0.08	4.185 ± .003	106.30 ± 0.08	.093 ± .005	2.36 ± 0.13	45°
R	1.055	26.80	.093	2.36	5.110 ± .003	129.79 ± 0.08	4.96 ± .003	125.98 ± 0.08	.093 ± .005	2.36 ± 0.13	45°
T-4	.805	20.45	.093	2.36	6.510 ± .003	165.35 ± 0.08	6.315 ± .003	160.40 ± 0.08	.093 ± .005	2.36 ± 0.13	45°
U	.805	20.45	.093	2.36	6.993 ± .003	177.62 ± 0.08	6.798 ± .003	172.67 ± 0.08	.093 ± .005	2.36 ± 0.13	45°
V	1.305	33.15	.250	6.35	8.816 ± .005	223.93 ± 0.13	8.336 ± .005	211.73 ± 0.13	.275 ± .005	6.99 ± 0.13	30°
W	1.805	45.85	.350	8.89	11.058 ± .005	280.87 ± 0.13	10.458 ± .005	265.63 ± 0.13	.353 ± .005	8.97 ± 0.13	30°

Table 1b: Nozzle Critical Dimensions (O-Ring Seat Nozzle)

Orifice	D min.		B (Radius)		J ± .005" (±0.13 mm)		K		L	
	in.	mm	in.	mm	in.	mm	in.	mm	in.	mm
D-2, E-2, F	.399	10.13	.016 ± .001	0.41 ± 0.03	.079	2.01	.867 ± .001	22.02 ± 0.03	.813 ± .001	20.65 ± 0.03
G	.399	10.13	.022 ± .001	0.56 ± 0.03	.090	2.29	1.058 $^{+.002}_{-.001}$	26.87 $^{+0.05}_{-0.03}$	.998 ± .001	25.35 ± 0.03
H	.305	7.75	.022 ± .001	0.56 ± 0.03	.060	1.52	1.214 $^{+.002}_{-.001}$	30.84 $^{+0.05}_{-0.03}$	1.165 $^{+.002}_{-.001}$	29.59 $^{+0.05}_{-0.03}$
J	.430	12.50	.022 ± .001	0.56 ± 0.03	.074	1.88	1.532 $^{+.002}_{-.001}$	38.91 $^{+0.05}_{-0.03}$	1.479 $^{+.002}_{-.001}$	37.57 $^{+0.05}_{-0.03}$
K	.492	12.50	.022 ± .001	0.56 ± 0.03	.126	3.20	1.836 ± .002	46.63 ± 0.05	1.780 $^{+.001}_{-.002}$	45.21 $^{+0.03}_{-0.05}$
L	.492	12.50	.017 ± .001	0.43 ± 0.03	.126	3.20	2.206 ± .002	56.03 ± 0.05	2.156 ± .002	54.76 ± 0.05
M	.492	12.50	.022 ± .001	0.56 ± 0.03	.126	3.20	2.534 ± .002	64.36 ± 0.05	2.478 ± .002	62.94 ± 0.05
N	.555	14.10	.022 ± .001	0.56 ± 0.03	.101	2.57	2.706 ± .002	68.73 ± 0.05	2.650 ± .002	67.31 ± 0.05
P	.680	17.27	.022 ± .001	0.56 ± 0.03	.150	3.81	3.332 ± .002	84.63 ± 0.05	3.277 $^{+.002}_{-.003}$	83.24 $^{+0.05}_{-0.08}$
Q	.930	23.62	.022 ± .001	0.56 ± 0.03	.188	4.78	4.335 ± .003	110.11 ± 0.08	4.281 ± .003	108.74 ± 0.08
R	1.055	26.80	.022 ± .001	0.56 ± 0.03	.215	5.46	5.092 ± .003	129.34 ± 0.08	5.033 ± .003	127.84 ± 0.08
T-4	.805	20.45	.022 ± .001	0.56 ± 0.03	.142	3.61	6.510 $^{+.003}_{-.004}$	165.35 $^{+0.08}_{-0.10}$	6.420 $^{+.004}_{-.003}$	163.07 $^{+0.10}_{-0.08}$
U	.805	20.45	.022 ± .001	0.56 ± 0.03	.142	3.61	6.992 ± .003	177.60 ± 0.08	6.902 ± .003	175.31 ± 0.08
V	1.305	33.15	.020 ± .001	0.51 ± 0.03	.275	6.99	9.125 ± .005	231.78 ± 0.13	8.336 ± .005	211.73 ± 0.13
W	1.805	45.85	.020 ± .005	0.51 ± 0.13	.353	8.97	11.125 ± .005	282.58 ± 0.13	10.458 ± .005	265.63 ± 0.13

X. Parts Inspection (Contd.)

Table 1c: Nozzle Critical Dimensions (UM Soft-Seat Nozzle)								
Orifice	D min.		A		B		C	
	in.	mm	in.	mm	in.	mm	in.	mm
D	.313	7.95	.906	23.01	.831	21.11	.026	0.66
E	.313	7.95	.906	23.01	.831	21.11	.026	0.66
F	.313	7.95	.906	23.01	.831	21.11	.026	0.66
G	.313	7.95	1.039	26.39	.953	24.21	.030	0.76
H	.250	6.35	1.224	31.09	1.123	28.52	.035	0.89
J	.375	9.53	1.564	39.73	1.435	36.45	.045	1.14
K	.438	11.13	1.866	47.40	1.712	43.48	.053	1.35
L	.438	11.13	2.325	59.06	2.133	54.18	.066	1.68
M	.438	11.13	2.616	66.45	2.400	60.96	.075	1.91
N	.500	12.70	2.863	72.72	2.627	66.73	.082	2.08
P	.625	15.88	3.468	88.09	3.182	80.82	.099	2.51
Q	.875	22.23	4.561	115.85	4.185	106.30	.130	3.30
R	1.000	25.40	5.406	137.31	4.960	125.98	.155	3.94
T	.750	19.05	6.883	174.83	6.315	160.40	.197	5.00
U	.750	19.05	7.409	188.19	6.798	172.67	.212	5.38
V	1.250	31.75	9.086	230.78	8.336	211.73	.260	6.60
W	1.750	44.45	11.399	289.53	10.458	265.63	.326	8.28

Table 2: Nozzle Bore Diameter									
Orifice		Pre-1978				Current			
		min.		max.		min.		max.	
Std.	UM	in.	mm	in.	mm	in.	mm	in.	mm
D-2	D	.650	16.51	.655	16.64	.674	17.12	.679	17.25
E-2	E	.650	16.51	.655	16.64	.674	17.12	.679	17.25
F	F	.650	16.51	.655	16.64	.674	17.12	.679	17.25
G	G	.835	21.21	.840	21.34	.863	21.92	.868	22.05
H	H	1.045	26.54	1.050	26.67	1.078	27.38	1.083	27.51
J	J	1.335	33.91	1.340	34.04	1.380	35.05	1.385	35.18
K	K	1.595	40.51	1.600	40.64	1.650	41.91	1.655	42.04
L	L	1.985	50.42	1.990	50.55	2.055	52.20	2.060	52.32
M	M	2.234	56.74	2.239	56.87	2.309	58.65	2.314	58.78
N	N	2.445	62.10	2.450	62.23	2.535	64.39	2.540	64.52
P	P	2.965	75.31	2.970	75.44	3.073	78.05	3.078	78.18
Q	Q	3.900	99.06	3.905	99.19	4.045	102.74	4.050	102.87
R	R	4.623	117.42	4.628	117.55	4.867	123.62	4.872	123.75
T-4	T	-	-	-	-	6.202	157.53	6.208	157.68
U	U	-	-	-	-	6.685	169.80	6.691	169.95
V	V	-	-	-	-	8.000	203.20	8.005	203.33
W	W	-	-	-	-	10.029	254.74	10.034	254.86

Note: If an old style nozzle is machined to the new configuration, it should be done to a 63 micro inch finish and shall be concentric and parallel to the original centerline within .004" (0.10 mm)T.I.R.

X. Parts Inspection (Contd.)

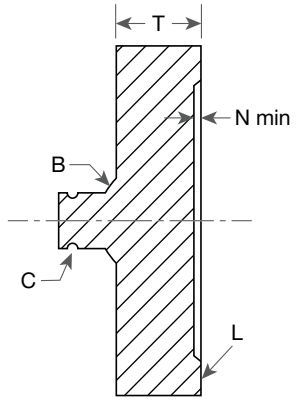

Type 1

Figure 20a: D - H Orifice Discs
D - U Orifice Discs (UM)

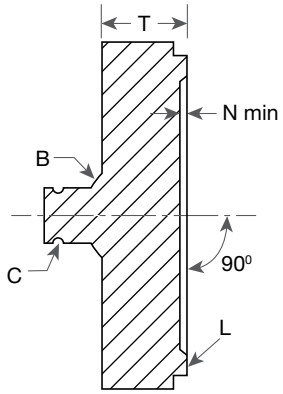

Type 2

Figure 20b:
J - U Orifice Discs

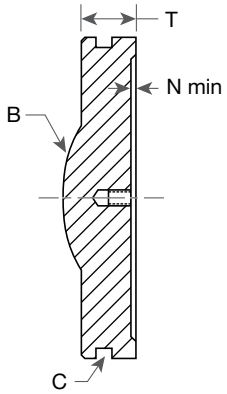

Type 3

Figure 20c: V & W Orifice Discs
(Std. & UM)

Figure 20: Disc Inspection Areas

Table 3a: Minimum Dimensions after Machining of the Disc Seat (Standard)

Disc Type	Orifice	T min.		N min.	
		in.	mm	in.	mm
Type 1	D-2	.182	4.62	.015	0.38
	E-2	.182	4.62	.015	0.38
	F	.182	4.62	.015	0.38
	G	.182	4.62	.015	0.38
	H	.343	8.71	.018	0.46
Type 2	J	.369	9.37	.020	0.51
	K	.432	10.97	.048	1.22
	L	.467	11.86	.048	1.22
	M	.467	11.86	.048	1.22
	N	.495	12.57	.048	1.22
	P	.620	15.75	.078	1.98
	Q	.620	15.75	.078	1.98
	R	.620	15.75	.078	1.98
	T-4	.832	21.13	.078	1.98
	U	.833	21.16	.078	1.98
Type 3	V	1.230	31.24	.120	3.05
	W	1.855	47.12	.168	4.27

Table 3b: Minimum Dimensions after Machining of the Disc Seat (Universal Media)

Disc Type	Orifice	T min.		N min.	
		in.	mm	in.	mm
Type 1	D	.177	4.50	.012	0.30
	E	.177	4.50	.012	0.30
	F	.177	4.50	.012	0.30
	G	.172	4.37	.015	0.38
	H	.345	8.76	.020	0.51
	J	.408	10.36	.028	0.71
	K	.480	12.19	.036	0.91
	L	.533	13.54	.053	1.35
	M	.545	13.84	.060	1.52
	N	.582	14.78	.064	1.63
	P	.718	18.24	.075	1.91
	Q	.750	19.05	.102	2.59
	R	.772	19.61	.123	3.12
	T	1.016	25.81	.159	4.04
	U	1.022	25.96	.172	4.37
Type 3	V	1.261	32.03	.213	5.41
	W	1.891	48.03	.269	6.83

X. Parts Inspection (Contd.)

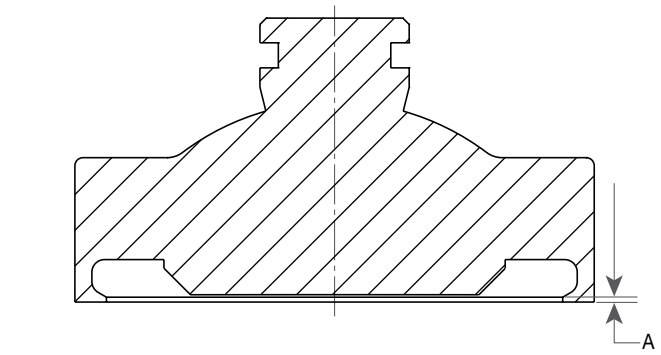

Figure 21a: D - H Orifices

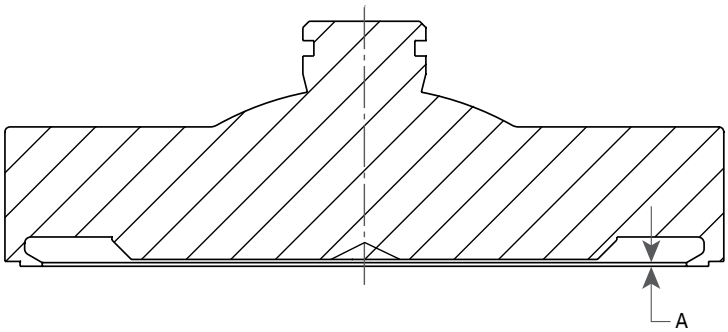

Figure 21b: J - W Orifices

Figure 21: Thermodisc® Design (D - W Orifices)

Table 4: Minimum A Dimensions (Thermodisc®)

Orifice	A min.	
	in.	mm
D	.006	0.15
E	.006	0.15
F	.006	0.15
G	.006	0.15
H	.006	0.15
J	.013	0.33
K	.014	0.36
L	.014	0.36
M	.014	0.36
N	.014	0.36
P	.017	0.43
Q	.015	0.38
R	.015	0.38
T-4	.025	0.64
U	.025	0.64
V	.033	0.84
W	.033	0.84

X. Parts Inspection (Contd.)

Disc Holder Inspection Criteria

Several disc holder designs are available, depending on the service and the type of valve (see Figure 22).

For identification, the G diameter (Dia.) is provided (see Tables 5a and 5b).

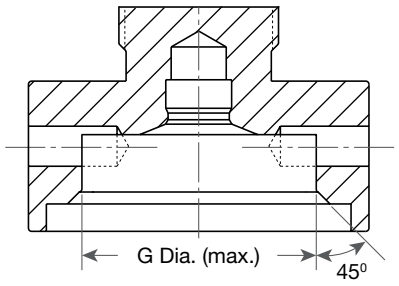

Figure 22a: Detail 1
Standard Disc Holder

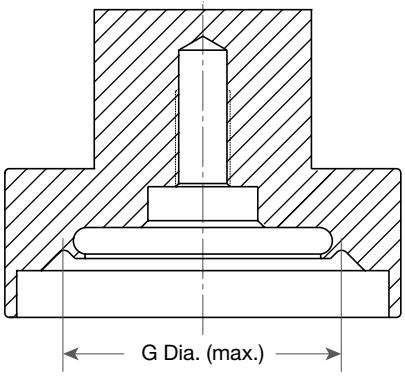

Figure 22b: Detail 2
O-Ring Disc Holder

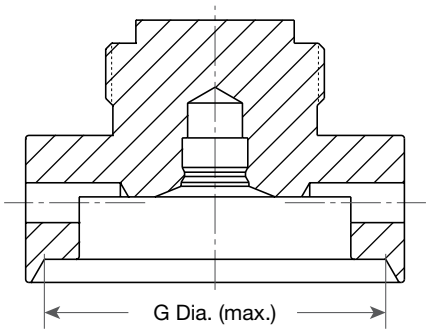

Figure 22c: Detail 3
Liquid Service Disc Holder
(LA Design)

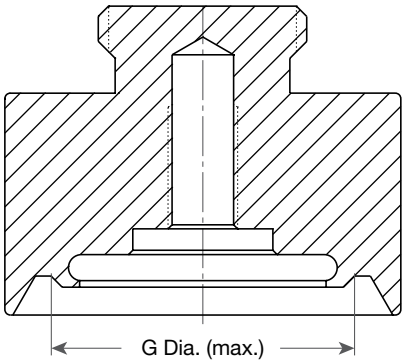

Figure 22d: Detail 4
O-Ring Liquid Service (DALA Design)
D-2, E-2, F & G Orifice

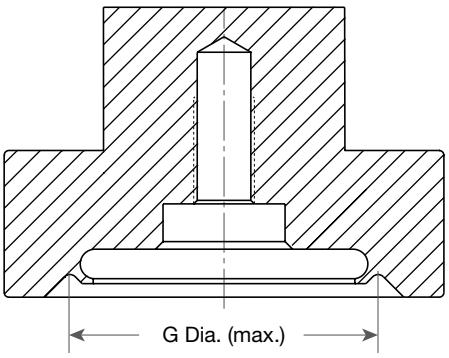

Figure 22e: Detail 5
O-Ring Liquid Service (DALA
Design) - H & J Orifice

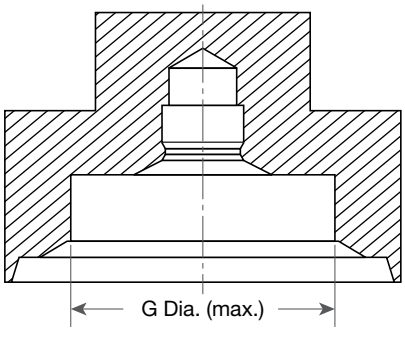

Figure 22f: Detail 6
Universal Media Service
(UM Design)

Figure 22: Disc Holder Designs

X. Parts Inspection (Contd.)

Table 5a: Maximum Inside Diameter (G) for Disc Holder Identification

Orifice	Standard Disc Holder								O-Ring Disc Holder							
	Airg/Gas Trim				Liquid Trim				Air/Gas Trim				Liquid Trim			
	Low Pressure		High Pressure		LS Design		LA Design		Low Pressure		High Pressure		DL Design		DALA Design	
	in.	mm	in.	mm	in.	mm	in.	mm	in.	mm	in.	mm	in.	mm	in.	mm
D-2	1.167	29.64	1.032	26.21	1.167	29.64	1.265[3]	32.13[3]	1.105[2]	28.07[2]	1.032	26.21	1.032	26.21	1.092[4]	27.74[4]
E-2	1.167	29.64	1.032	26.21	1.167	29.64	1.265[3]	32.13[3]	1.105[2]	28.07[2]	1.032	26.21	1.032	26.21	1.092[4]	27.74[4]
F	1.167	29.64	1.032	26.21	1.167	29.64	1.265[3]	32.13[3]	1.105[2]	28.07[2]	1.032	26.21	1.032	26.21	1.092[4]	27.74[4]
G	1.272	32.31	1.183	30.05	1.272	32.31	1.375[3]	34.93[3]	1.275[2]	32.39[2]	1.183	30.05	1.272	32.31	1.265[4]	32.13[4]
H	1.491	37.87	1.394	35.41	1.491	37.87	1.656[3]	42.06[3]	1.494[2]	37.95[2]	1.394	35.41	1.491	37.87	1.494[5]	37.95[5]
J	1.929	49.00	1.780	45.21	1.929	49.00	2.156[3]	54.76[3]	1.856[2]	47.14[2]	1.780	45.21	1.929	49.00	2.155[4]	54.74[4]
K	2.126	54.00	2.126	54.00	2.264	57.51	2.469[3]	62.71[3]	2.264	57.51	2.264	57.51	2.264	57.51	2.469[3]	62.71[3]
L	2.527	64.19	2.527	64.19	2.762	70.15	3.063[3]	77.80[3]	2.527	64.19	2.527	64.19	2.762	70.15	3.063[3]	77.79[3]
M	2.980	75.69	2.980	75.69	3.054	77.57	3.359[3]	85.32[3]	2.980	75.69	2.980	75.69	3.054	77.57	3.359[3]	85.32[3]
N	3.088	78.44	3.088	78.44	3.480	88.39	3.828[3]	97.23[3]	3.088	78.44	3.088	78.44	3.480	88.39	3.828[3]	97.23[3]
P	3.950	100.33	3.950	100.33	4.361	110.77	4.813[3]	122.25[3]	3.950	100.33	3.950	100.33	4.361	110.77	4.813[3]	122.25[3]
Q	5.197	132.00	5.197	132.00	5.546	140.87	6.109[3]	155.17[3]	5.197	132.00	5.197	132.00	5.546	140.87	6.109[3]	155.18[3]
R	6.155	156.34	6.155	156.34	6.563	166.70	7.219[3]	183.36[3]	6.155	156.34	6.155	156.34	6.563	166.70	7.219[3]	183.36[3]
T-4	7.841	199.16	7.841	199.16	-	-	8.625[3]	219.08[3]	7.841	199.16	7.841	199.16	-	-	8.625[3]	219.08[3]
U	8.324	211.43	8.324	211.43	-	-	Note1	Note1	Note1	Note1	Note1	Note1	-	-	Note1	Note1
V	10.104	256.64	10.104	256.64	-	-	11.844[3]	300.84[3]	10.594	269.08	10.594	269.08	-	-	11.844[3]	300.84[3]
W	12.656	321.46	12.656	321.46	-	-	14.641[3]	371.88[3]	13.063	331.80	13.063	331.80	-	-	14.641[3]	371.88[3]

Note 1: Contact the factory for this information
Note 2: Detail 2
Note 3: Detail 3
Note 4: Detail 4
Note 5: Detail 5

Table 5b: Maximum Inside Diameter (G) for Disc Holder Identification - UM Disc Holder (Detail 6)

Orifice	Low Pressure		Medium Pressure		High Pressure	
	in.	mm	in.	mm	in.	mm
D	1.131	28.73	1.081	27.46	1.031	26.19
E	1.131	28.73	1.081	27.46	1.031	26.19
F	1.131	28.73	1.081	27.46	1.031	26.19
G	1.297	32.94	-	-	1.182	30.02
H	1.528	38.81	-	-	1.393	35.38
J	1.953	49.61	-	-	1.780	45.21
K	2.124	53.95	-	-	2.124	53.95
L	2.646	67.21	-	-	2.646	67.21
M	2.977	75.62	-	-	2.977	75.62
N	3.259	82.78	-	-	3.259	82.78
P	3.947	100.25	-	-	3.947	100.25
Q	5.191	131.85	-	-	5.191	131.85
R	6.153	156.29	-	-	6.153	156.29
T	7.833	198.96	-	-	7.833	198.96
U	8.432	214.17	-	-	8.432	214.17
V	10.340	262.64	-	-	10.340	262.64
W	12.972	329.49	-	-	12.972	329.49

X. Parts Inspection (Contd.)

Set Pressure Change: If it is necessary to change valve set pressure, it may also be necessary to change the disc holder (8). Determine if the disc holder must be changed to/from low pressure from/ to high pressure when changing the set pressure (see Table 8).

Media Change: If the protected media is changed in form from a compressible fluid (air, gas, or steam) to a non-compressible fluid (liquid), it is necessary to change from a standard to a liquid trim disc holder for non-UM valves. No change in disc holder is required for the UM valve when the protected media changes from compressible to non-compressible, or vise-versa.

Bellows Conversion: If a conventional 1900™ Series SRV has a D, E, F, G or H orifice disc holder (8), the disc holder must be replaced with a new disc holder included in the bellows conversion kit.

O-Ring Conversion: If a standard metal-seated 1900™ Series SRV is to be converted to an O-ring valve, the disc holder (8) must be replaced with an O-ring disc holder which is included in the O-ring conversion kit. For K through U orifice valves, the standard disc holder may be machined to receive the larger O-ring disc.

Soft-Seat Universal Media Conversion: If a UM metal-seated 1900 Series SRV is to be converted to a soft-seat valve, the disc (2) must be replaced with an soft-seat disc (2) which is included in the soft-seat conversion kit.

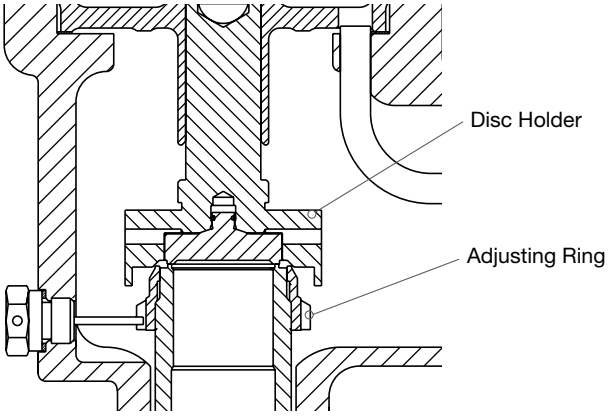

Figure 23: 1900™ Series Liquid Service (LS) Internals

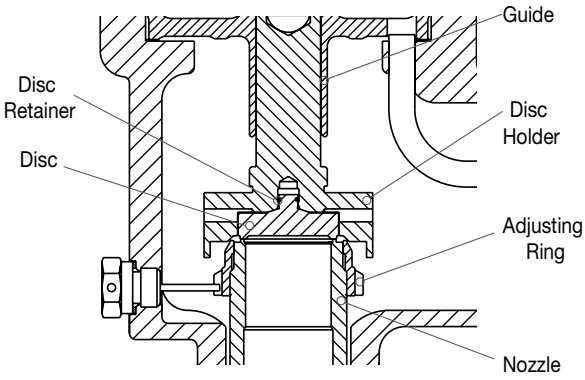

Figure 24: 1900™ Series Liquid Service (LA) Internals

X. Parts Inspection (Contd.)

Guide Inspection Criteria

Replace the guide (9) if:

- Visible galling is present on the inside guiding surface.
- Gasket seating areas are pitted and cause the valve to leak between the bonnet (11) and base (1).

The guide (9) type varies depending on the valve type: O-ring valve, bellows valve, or standard valve.

Inspect the guide as follows:

- Find the correct valve orifice size and disc holder (8) measurements (see Table 6).
- Measure the barrel portion of the disc holder and compare it to the nominal measurement on Table 6 to determine the maximum allowable clearance between the disc holder and the guide.
- Replace the guide and disc holder if the clearance between the inner diameter (I.D) and the guide and/or the outer diameter (O.D) of the disc holder is not within the clearance dimensions.

Spindle Inspection Criteria

Replace the spindle (15) if:

- The bearing point is pitted, galled, or distorted.
- Threads are torn so that release nut and/or release locknut will not thread on or off.
- The spindle cannot be straightened less than the .007˝ (0.17 mm) total indicator reading (See Checking Spindle Concentricity and Figure 33).

Table 6: Allowable Clearance for Guide and Disc Holder (Std.[1&2] & UM[2])

Orifice		Bellows Type (-30)						Non-Bellows Type (-00)					
		Disc Holder Barrel O.D		Clearance				Disc Holder Barrel O.D		Clearance			
		min.		min.		max.		min.		min.		max	
Std.	UM	in.	mm	in.	mm	in.	mm	in.	mm	in.	mm	in.	mm
D-2	D	.448	11.38	.003	0.08	.007	0.18	.993	25.22	.005	0.13	.008	0.20
E-2	E	.448	11.38	.003	0.08	.007	0.18	.993	25.22	.005	0.13	.008	0.20
F	F	.448	11.38	.003	0.08	.007	0.18	.993	25.22	.005	0.13	.008	0.20
G	G	.494	12.55	.003	0.08	.007	0.18	.993	25.22	.005	0.13	.008	0.20
H	H	.680	17.27	.004	0.10	.008	0.20	1.117	28.37	.005	0.13	.009	0.23
J	J	.992	25.20	.005	0.13	.009	0.23	0.992	25.20	.005	0.13	.009	0.23
K	K	1.240	31.50	.007	0.18	.011	0.28	1.240	31.50	.007	0.18	.011	0.28
L	L	1.365	34.67	.007	0.18	.011	0.28	1.365	34.67	.007	0.18	.011	0.28
M	M	1.742	44.25	.005	0.13	.009	0.23	1.742	44.25	.005	0.13	.009	0.23
N	N	1.868	47.45	.004	0.10	.008	0.20	1.868	47.45	.004	0.10	.008	0.20
P	P	2.302	58.47	.008	0.20	.012	0.30	2.302	58.47	.008	0.20	.012	0.30
Q	Q	2.302	58.47	.008	0.20	.012	0.30	2.302	58.47	.008	0.20	.012	0.30
R	R	2.302	58.47	.008	0.20	.012	0.30	2.302	58.47	.008	0.20	.012	0.30
T-4	T	2.302	58.47	.007	0.18	.011	0.28	2.302	58.47	.007	0.18	.011	0.28
U	U	2.302	58.47	.007	0.18	.011	0.28	2.302	58.47	.007	0.18	.011	0.28
V	V	6.424	163.17	.018	0.46	.023	0.58	6.424	163.17	.018	0.46	.023	0.58
W	W	8.424	213.97	.018	0.46	.023	0.58	8.424	213.97	.018	0.46	.023	0.58

Note 1: For valves manufactured prior to 1978, contact the factory for dimensions and clearances.
Note 2: Guide and disc holder assembly: The disc holder and the guide may be retained provided their diametrical clearance falls within the limits within the table. If the fit between the assembled parts is outside the allowable clearance, replace either component or both to provide proper assembly clearance.

X. Parts Inspection (Contd.)

Spring Inspection Criteria

Replace the spring (18) if:

- Pitting and corrosion of the coils reduce coil diameter.
- Spring ends are not parallel in the free height condition.
- Obvious uneven coil spacing or spring distortion is present.
- The maximum clearance between A and A_1 and between B and B_1 (see Figure 25) is more than:
  - .031" (.79 mm) for springs with an inner diameter (ID) of less than 4" (100 mm).
  - .047" (1.19 mm) for springs with an ID of 4" (100 mm) or greater.

If there is constant backpressure in a conventional 1900™ Series SRV (without balancing bellows), check that the cold differential set pressure of the replacement spring (18) is within the recommended range. If the relieving temperature causes the cold differential set pressure, then select a spring based on the valve's actual set pressure, not on the cold differential set pressure (See Set Pressure Compensation).

ATTENTION!

If a spring must be replaced, order a spring assembly, as it includes custom fit spring washers.

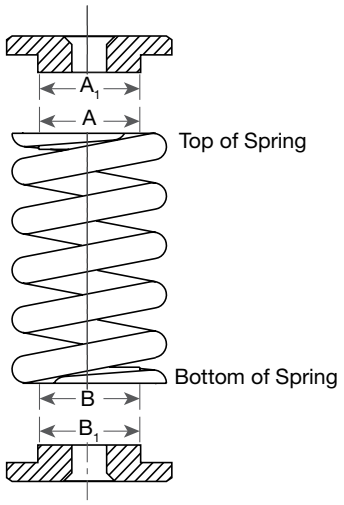

Figure 25: Spring Allowed Tolerance

XI. Maintenance

General Information

After the valve has been disassembled, closely inspect the seating surfaces. Usually, a lapping of seats is all that is necessary to return a valve to working order. If an inspection shows badly damaged valve seating surfaces, machining will be required before lapping. O-ring seat seal valve nozzles can only be reconditioned by machining, not lapping. (For specific information concerning the machining of nozzle and disc seating surfaces, see the Re-Machining Nozzle Seats and Bores and Re-Machining the Disc Seat sections.)

ATTENTION!

See Optional Glide-Aloy™ Parts to determine if the valve contains Glide-Aloy™ treated components (i.e. the disc holder and/or the guide). Coding on the valve nameplate identifies these components.

The seating surfaces of the metal-seated Consolidated® SRV are flat. The nozzle seat is relieved by a 5º angle on the outside of the flat seat. The disc seat is wider than the nozzle seat; thus, the control of seat width is the nozzle seat (see Figure 26).

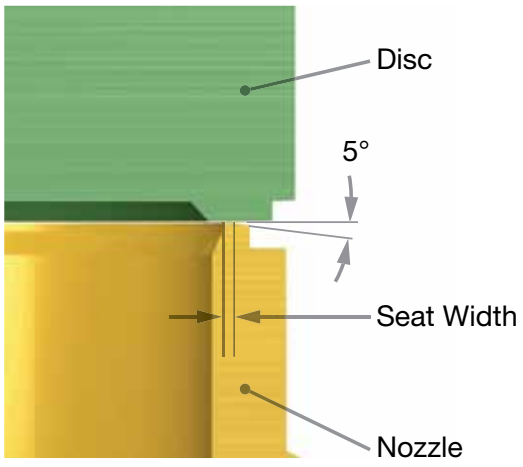

Figure 26: Seating Surface

A cast iron lap, coated with a lapping compound, is used for reconditioning the seating surfaces of the nozzle (2) and disc (6).

ATTENTION!

To establish leak-free valve seats, the nozzle seating surface and the disc seating surface must be lapped flat.

Lapping Nozzle Seats (Non-O-Ring Styles)

ATTENTION!

Nozzle laps (See Figure 27) are available from Dresser, Inc. Do not use these laps if the valve nozzle can be removed and machined to the proper seat dimensions (see Tables 7a and 7d).

Lap the 5º angle of the nozzle first (see Figure 27, View A). Then, invert the nozzle lap and use the flat side as a “starter” lap to ensure the seat is square (see Figure 27, View B). Use a ring lap in a circular motion to finish lapping (see Figure 27, View C and Reconditioning of Laps). Keep the lap squarely on the flat surface and avoid rocking it. Rocking will cause rounding of the seat.

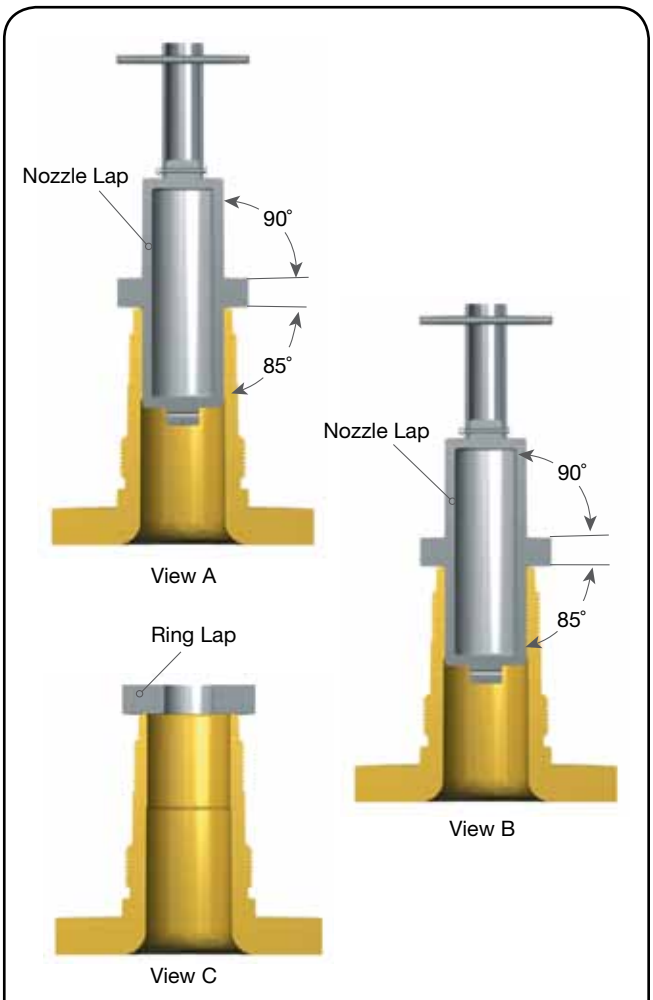

Figure 27: Lapping Nozzle Seats

XI. Maintenance (Contd.)

Lapped Nozzle Seat Widths

A wide nozzle seat will induce simmer, especially in the smaller-orifice, lower-pressure valves. For this reason, the seats of valves other than O-ring valves should be as narrow as is practical. Since the seat must be wide enough to carry the bearing load imposed upon it by the spring force, the higher-pressure valves must have wider seats than the lower-pressure valves. The nozzle seat width should conform to the measurements in Tables 7a to 7d.

Table 7a: Nozzle Seat Width (Standard Metal Seat Design)

Orifice	Set Pressure Range		Lapped Seat Width	
	psig	barg	in.	mm
D-G	1 – 50	0.07 – 3.45	.012	0.30
	51 – 100	3.52 – 6.89	.018	0.46
	101 – 250	6.96 – 17.24	.025	0.64
	251 – 400	17.31 – 27.58	.032	0.81
	401 – Above	27.65 – Above	.038	0.97
H-J	1 – 50	0.07 – 3.45	.019	0.48
	51 – 100	3.52 – 6.89	.025	0.64
	101 – 250	6.96 – 17.24	.029	0.74
	251 – 400	17.31 – 27.58	.032	0.81
	401 – 800	27.65 – 55.16	.038	0.97
	801 – Above	55.23 – Above	.038[1]	0.97[1]
K-N	1 – 50	0.07 – 3.45	.025	0.64
	51 – 100	3.52 – 6.89	.030	0.76
	101 – 250	6.96 – 17.24	.035	0.89
	251 – 400	17.31 – 27.58	.040	1.02
	401 – 800	27.65 – 55.16	.045	1.14
	801 – Above	55.23 – Above	.045[1]	1.14[1]
P-R	1 – 50	0.07 – 3.45	.030	0.76
	51 – 100	3.52 – 6.89	.037	0.94
	101 – 251	6.96 – 17.31	.045	1.14
	251 – 400	17.31 – 27.58	.052	1.32
	401 – 800	27.65 – 55.16	.059	1.50
	801 – Above	55.23 – Above	.064	1.63
T	1 – 50	0.07 – 3.45	.040	1.02
	51 – 100	3.52 – 6.89	.045	1.14
	101 – 250	6.96 – 17.24	.053	1.35
	251 – 300	17.31 – 20.68	.060	1.52
U	1 – 50	0.07 – 3.45	.040	1.02
	51 – 100	3.52 – 6.89	.045	1.14
	101 – 250	6.96 – 17.24	.053	1.35
	251 – 300	17.31 – 20.68	.060	1.52
V	1 – 50	0.07 – 3.45	.075	1.91
	51 – 100	3.52 – 6.89	.090	2.29
	101 – 250	6.96 – 17.24	.115	2.92
	251 – 300	17.31 – 20.68	.130	3.30
W	1 – 50	0.07 – 3.45	.100	2.54
	51 – 100	3.52 – 6.89	.120	3.05
	101 – 250	6.96 – 17.24	.140	3.56
	251 – 300	17.31 – 20.68	.160	4.06

Note 1: + .005" (0.13 mm) per 100 psig (6.89 barg) [.070"(1.78 mm) ± .005"(0.13) max].

Table 7b: Nozzle Seat Width (Standard Metal Seat Design (UM)[2]

Orifice	Set Pressure Range		Lapped Seat Width	
	psig	barg	in.	mm
T-U	1 – 50	0.07 – 3.45	.040	1.02
	51 – 100	3.52 – 6.89	.045	1.14
	101 – 250	6.96 – 17.24	.053	1.35
	251 – 300	17.31 – 20.68	.060	1.52

Note 2: All other values same as in Table 7a.

Table 7c: Nozzle Seat Width (Thermodisc Seat Design)

Orifice	Set Pressure Range		Lapped Seat Width	
	psig	barg	in.	mm
D-F	1 – 100	0.07 – 6.89	.020 – .030	0.51 – 0.76
	101 – 300	6.96 – 20.68	.035 – .045	0.89 – 1.14
	301 – 800	20.75 – 55.16	.045 – .055	1.14 – 1.40
	801 – Above	55.23 – Above	Full Width[3]	Full Width[3]
G-J	1 – 100	0.07 – 6.89	.025 – .035	0.64 – 0.89
	101 – 300	6.96 – 20.68	.035 – .045	0.89 – 1.14
	301 – 800	20.75 – 55.16	.045 – .055	1.14 – 1.40
	801 – Above	55.23 – Above	Full Width[3]	Full Width[3]
K-N	1 – 100	0.07 – 6.89	.035 – .045	0.89 – 1.14
	101 – 300	6.96 – 20.68	.045 – .055	1.14 – 1.40
	301 – 800	20.75 – 55.16	.055 – .065	1.40 – 1.65
	801 – Above	55.23 – Above	Full Width[3]	Full Width[3]
P-R	1 – 100	0.07 – 6.89	.040 – .050	1.02 – 1.27
	101 – 130	6.96 – 8.96	.050 – .065	1.27 – 1.65
	131 – 800	9.03 – 55.16	.060 – .070	1.52 – 1.78
	801 – Above	55.23 – Above	Full Width[3]	Full Width[3]
T	1 – 100	0.07 – 6.89	.050 – .065	1.27 – 1.65
	101 – 300	6.96 – 20.68	.060 – .075	1.52 – 1.91
U	1 – 100	0.07 – 6.89	.050 – .065	1.27 – 1.65
	101 – 300	6.96 – 20.68	.060 – .075	1.52 – 1.91
	101 – 300	6.96 – 20.68	.095 – .130	2.41 – 3.30
W	1 – 100	0.07 – 6.89	.100 – .125	2.54 – 3.18
	101 – 300	6.96 – 20.68	.120 – .160	3.05 – 4.06

Note 3: Not to exceed .070"(1.78 mm) ± .005"(0.13).

XI. Maintenance (Contd.)

Table 7d: Nozzle Seat Width (Standard Soft Seat Design (UM))

Orifice	Set Pressure Range		Lapped Seat Width	
	psig	barg	in.	mm
F-H	1 – 124	0.07 – 8.55	.010	0.25
	125 – 359	8.62 – 24.75	No Lapping, Sharp Angle	
	360 – 749	24.82 – 51.64	.005	0.13
	750 – Above	51.71 – Above	.010	0.25
J-L	1 – 124	0.07 – 8.55	.015	0.38
	125 – 359	8.62 – 24.75	No Lapping, Sharp Angle	
	360 – 749	24.82 – 51.64	.010	0.25
	750 – Above	51.71 – Above	.015	0.38
M-P	1 – 124	0.07 – 8.55	.025	0.64
	125 – 359	8.62 – 24.75	.005	0.13
	360 – 749	24.82 – 51.64	.018	0.46
	750 – Above	51.71 – Above	.050	1.27
Q-R	1 – 124	0.07 – 8.55	.072	1.83
	125 – 200	8.62 – 13.79	.013	0.33
	201 – 360	13.86 – 24.82	.025	0.64
T-U	1 – 124	0.07 – 8.55	.072	1.83
	125 – 200	8.62 – 13.79	.013	0.33
	201 – 360	13.86 – 24.82	.025	0.64
V-W	1 – 124	0.07 – 8.55	.100	2.54
	125 – 200	8.62 – 13.79	.017	0.43
	201 – 300	13.86 – 20.68	.025	0.64

To measure the seat width, use a Model S1-34-35-37 Bausch and Lomb Optical Co. measuring magnifier or an equivalent seven-power glass with a .750" (19.05 mm) scale showing graduations of .005 inch (0.13 mm). Figures 28a and 28b illustrate the use of this tool in measuring the nozzle seat width.

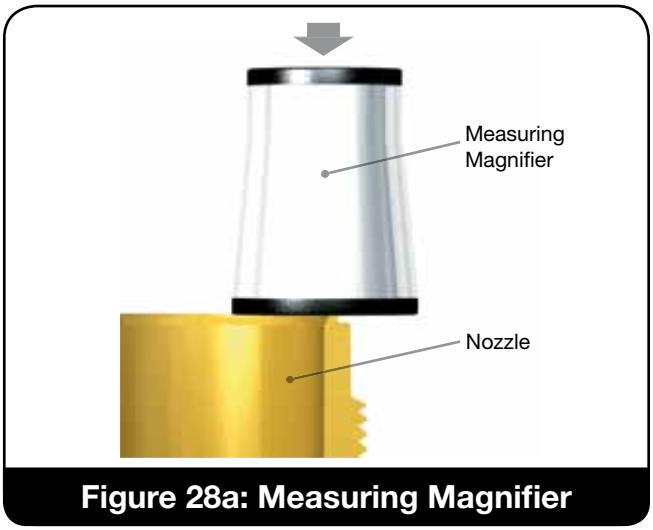

Figure 28a: Measuring Magnifier

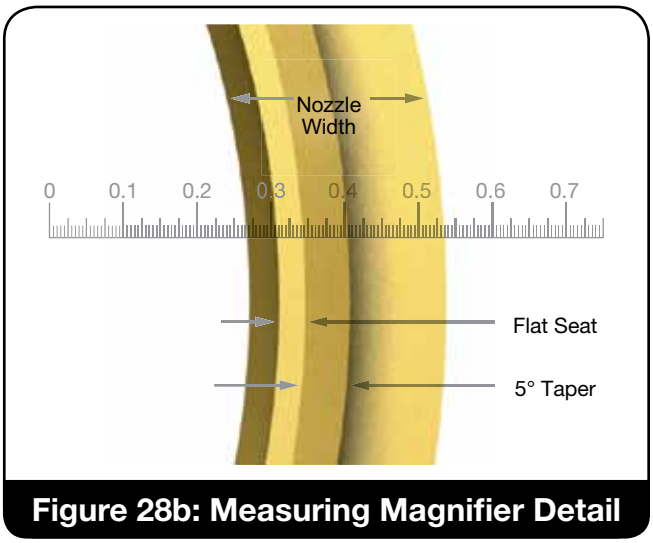

Figure 28b: Measuring Magnifier Detail

If additional lighting is required for measuring, use a gooseneck fl ashlight similar to the Type A Lamp Assembly (Standard Molding Corp.), or equivalent.

Lapping Disc Seats

Use a ring lap or lapping plate to lap the disc in a circular motion, applying uniform pressure and slowly rotating the disc or lap.

Precautions and Hints for Lapping Seats

To ensure a quality lapping process, observe precautions and guidelines as follows:

- Keep work materials clean.
- Always use a fresh lap. If signs of wear (out of flatness) are evident, recondition the lap.
- Apply a very thin layer of lapping compound to the lap to prevent rounding off the edges of the seat.
- Keep the lap squarely on the flat surface, and avoid rocking the lap, which causes rounding of the seat.
- When lapping, keep a firm grip on the lapped part to prevent dropping it and damaging the seat.
- Lap in a circular motion while applying a uniform pressure. Slowly rotate the lap to evenly distribute the lapping compound.

XI. Maintenance (Contd.)

- Wipe off the old compound and replace it with new compound frequently. Apply more pressure to speed the cutting action of the compound.
- To check the seating surfaces, remove all compound from the seat and the lap. Then, shine the seat with the same lap using the lapping method as described above. Low sections on the seating surface show up as shadow in contrast to the shiny portion.
- If shadows are present, further lapping is necessary. Only laps known to be flat can be used. It should take only a few minutes to remove the shadows.
- When lapping is complete, any lines appearing as cross-scratches can be removed by rotating the lap on its axis (which has been wiped clean of compound) on the seat.
- Thoroughly clean the lapped seat using a lintfree cloth and a cleansing fluid.

ATTENTION!

Before assembly, lap the contact surfaces of the nozzle, soft-seat disc (UM DA) and O-ring retainer to provide metal-to-metal seat tightness in the event of O-ring or Teflon seal (UM DA) failure.

Lapping O-Ring Seating Surfaces

Refer to Figure 10 and assemble the O-ring retainer to the disc holder (8) (D through J orifice) or disc (6) (K through U orifice) using the retainer lock screw(s) as follows:

1. Apply 3A lapping compound to the retainerseating surface.
2. Place the retainer on the nozzle seat (see Figure 26) and lap the retainer to the nozzle (2).
3. Once uniform contact is established, clean the nozzle (2) and O-ring retainer.
4. Repeat the procedure with 1000-grit compound.
5. Remove the retainer lock screw(s) and O-ring retainer, and thoroughly clean the O-ring retainer, retainer lock screws, and disc holder (8) or disc (6).

Reconditioning of Laps

Ring laps are reconditioned by lapping them on a flat lapping plate in a figure-eight motion (see Figure 29). To ensure the best results, recondition the ring laps after each use. Use an optical flat to check the quality of the lap.

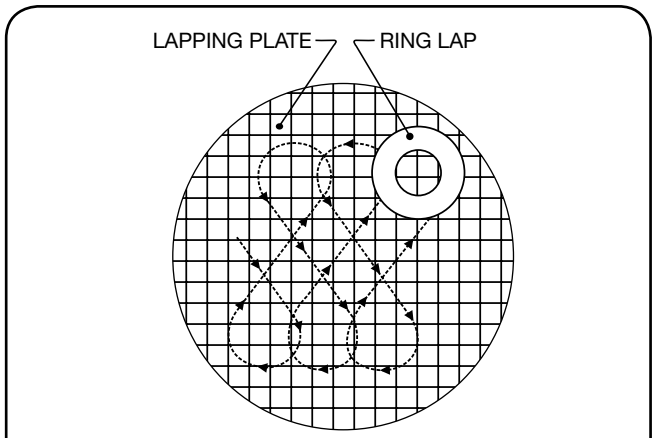

Figure 29: Lapping Pattern

Nozzle laps (see Figure 27) must be re-machined to recondition the lapping surfaces. Place the nozzle lap in a lathe between centers (see Figure 30). The surfaces marked A and B must be running concentrically.

One lapping surface is 90º and the other is 85º. The angle of each surface is marked on the lap. Machine surfaces C and D by taking light cuts at the proper angle until the lapping surfaces are reconditioned.

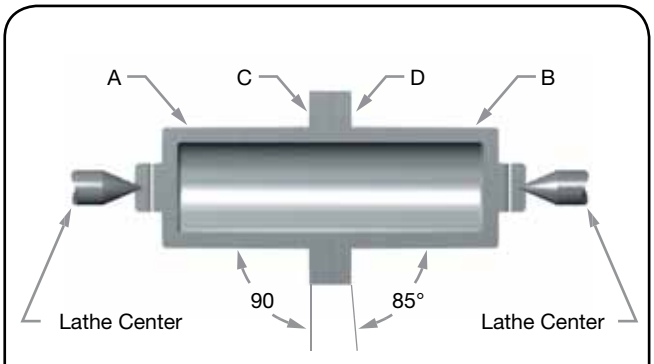

Figure 30: Nozzle Lap in a Lathe

XI. Maintenance (Contd.)

Re-Machining Nozzle Seats and Bores

1. Remove the nozzle (2) from the valve to be remachined. If it cannot be removed from the base (1), re-machine it inside the base.
2. Set-up the lathe and nozzle (2) as follows:
   - Grip the nozzle in a four-jaw independent chuck (or collet, if appropriate) using a piece of soft material such as copper or fiber between the jaws and the nozzle (see Figure 31, A).
   - True-up the nozzle so that the surfaces marked B, C, and D run true within .001" (.025 mm) on the total indicator reading (see Figure 31).

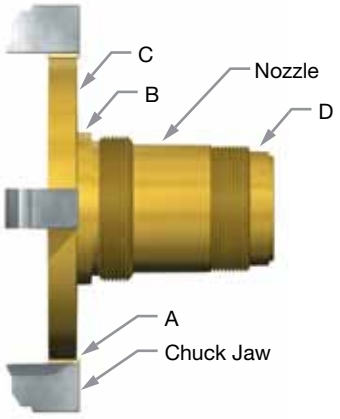

Figure 31: Nozzle Positioned in a Jaw

3. Re-machine the metal-to-metal seat (see Figure 19 and Table 1) as follows:
   - Make light cuts across the surface L at 5º until the damaged areas are removed. Turn to the smoothest possible finish.
   - Cut back the outside surface at G until dimension N is obtained. The surface at G is common to all nozzles except the D-1. Omit this step on the D-1 orifice nozzles.
   - Re-machine diameter H, until dimension E is obtained. Reestablish angle P.

The nozzle is now ready for lapping.

   - Discard the nozzle when the minimum dimension D (see Figure 19 and Table 1) is reached.

4. Re-machine the O-ring seat seal (see Figure 19 and Table 1) as follows:
   - Make light cuts across surface A at 45º until the damaged areas are removed. Turn to the smoothest possible finish.
   - Cut back the outside surface at M until dimension J is obtained. Re-machine radius B.

The nozzle is now ready for lapping.

   - Discard the nozzle when the minimum dimension D (see Figure 19 and Table 1) is reached.

Re-Machining the Disc Seat

Machine the standard disc seating surface (see Figure 28) as follows:

1. Grip the disc (6) in a four-jaw independent chuck (or collet, if appropriate), using a piece of soft material such as copper or fiber between the jaws and the disc (see Figure 32, A).
2. True-up the disc (6) so that the surface marked B and C run true within .001" (0.025 mm) on the total indicator reading (see Figure 32).
3. Make light cuts across the seating surface L until damaged areas are removed. Turn to the smoothest possible finish.

The disc (6) is now ready for lapping.

   - Discard the disc if the minimum dimension N or T (Figure 16 and Table 3) is reached. Do not reestablish surface C as (see Figure 32).

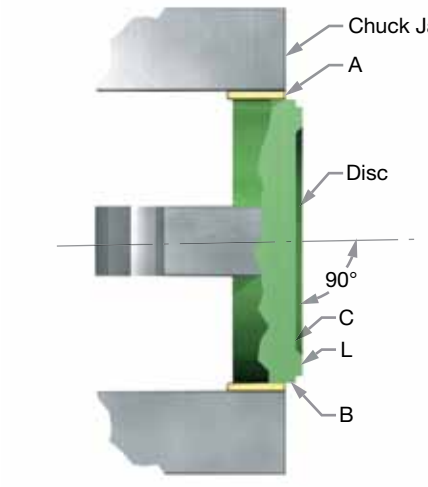

Figure 32: Standard Disc Seating Surface

ATTENTION!

Do not machine a Thermodisc, O-ring Seat disc, or Soft-seat (UM DA) disc.

XI. Maintenance (Contd.)

Checking Spindle Concentricity

It is important that the spindle (15) of an SRV be straight in order to transmit the spring load to the disc (6) without binding laterally. Over-gagging is a common cause of bent spindles. Check the essential working surfaces of the spindle using any of the recommended methods as follows:

1. Set up the V-block support (see Figure 33) as follows:
   - Place the ball-pointed spindles in a piece of material B that has been recessed to permit free rotation of the spindle (15). For hollow spindles, a ball-pointed support is required.
   - Support the spindle with a V-block A placed near the upper end of the spindle, but below the threads.
   - Apply a dial indicator at approximately 45º to the outer edge of the spring washer seat at C.
   - Rotate the spindle. The total indicator reading should not exceed .007" (.17 mm). Straighten the spindle, if necessary. To straighten the spindle, place the unthreaded portion of the small and large end in padded V-blocks, with the point of maximum indicator readout upward, and then apply a downward force with a padded press or jack as required, until the spindle is within the specifications.

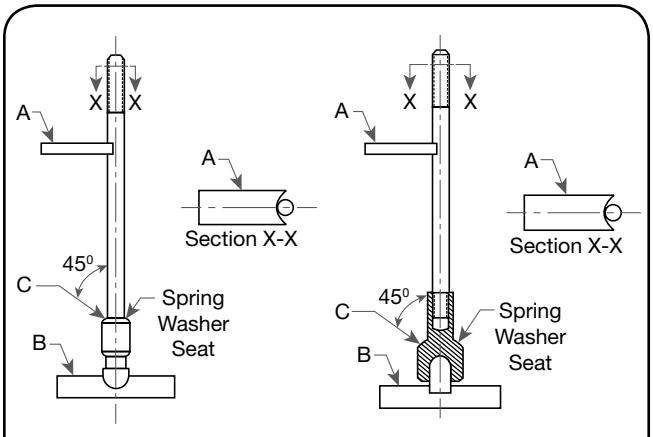

Figure 33: V-Block Support Setup

Set Pressure Change-Disc Holder

The disc holder (8) must be replaced if the set pressure must be changed and the change involves crossing the dividing line between high pressure and low pressure. Determine whether the disc holder must be changed when changing the set pressure (see Table 8).

Checking Lift on Restricted Lift Valves

ATTENTION!

Restricted lift valves may be identified by the restricted lift nameplate.

General

Restricted lift valves have a limit washer that prevents the disc (6) and disc holder (8) from lifting beyond the required lift and resulting capacity. The D-1 and E-1 valves do not require limit washers. The D-2 and E-2 valves have a special nozzle with the overall height and flange dimension of the D-1 or E-1, and the seat dimensions and bore diameter are identical to the F orifice nozzle. The 1900 UM D and E have components identical to the 1900 F UM, but with limit washers.

Other 1900™ Series valves may be restricted in the same manner when necessary. These valves may be restricted to a minimum lift of 30% of the full rated capacity or .080˝ (2.03 mm) (See National Board Code Case 1945-2).

It is important to check lift on all restricted lift valves after servicing or replacing parts. This procedure is necessary to ensure reliability of the nameplate capacity.

ATTENTION!

The required lift for a restricted lift valve is indicated on the restricted lift nameplate (see Figure 34).

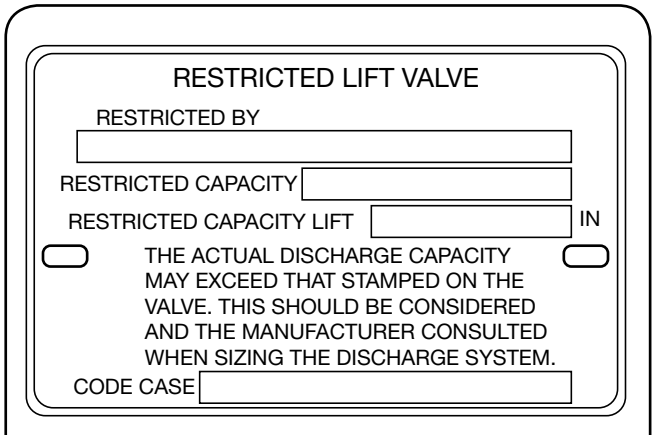

Figure 34: Restricted Lift Nameplate

XI. Maintenance (Contd.)

Table 8a: Disc Holder Selection Criteria (Non-UM)

Orifice Size	Air/Gas		Liquid		Air/Gas		Liquid		
	Metal Seat		Metal Seat	O-Ring Seat	O-Ring Seat		Metal Seat	O-Ring Seat	
	Low Pressure Disc Holder	High Pressure Disc Holder			Low Pressure Disc Holder	High Pressure Disc Holder		High Pressure Disc Holder	Low Pressure Disc Holder
	(MS & GS)	(MS & GS)	(MS & LS)	(DA – LS) or (DL)	(DA & GS)	(DA & GS)	(MS & LA)	(DA & LA)	(DA & LA)
D-2, F	100 psig (6.89 barg) and Below	Above 100 psig (6.89 barg)	ALL Pressures (Same as Low Pressure Air/Gas)	ALL Pressures	5 - 35 psig (0.34 - 2.41 barg)	36 psig (2.48 barg) and Above	ALL Pressures	75 psig (5.17 barg) and Below	Above 75 psig (5.17 barg)
G	50 psig (3.45 barg) and Below	Above 50 psig (3.45 barg)	ALL Pressures (Same as Low Pressure Air/Gas)	ALL Pressures	5 - 120 psig (0.34 - 8.27 barg)	121 psig (8.34 barg)	ALL Pressures	-	ALL Pressures
H	50 psig (3.45 barg) and Below	Above 50 psig (3.45 barg)	ALL Pressures (Same as Low Pressure Air/Gas)	ALL Pressures	5 - 120 psig (0.34 - 8.27 barg)	121 psig (8.34 barg) and Above	ALL Pressures	-	ALL Pressures
J-2	50 psig (3.45 barg) and Below	Above 50 psig (3.45 barg)	ALL Pressures (Same as Low Pressure Air/Gas)	ALL Pressures	5 - 120 psig (0.34 - 8.27 barg)	121 psig (8.34 barg) and Above	ALL Pressures	-	ALL Pressures
K	-	ALL Pressures	(Same as	ALL Pressures	-	ALL Pressures	ALL Pressures	-	ALL Pressures
L	-	ALL Pressures	Low Pressure Air/Gas)	ALL Pressures	-	ALL Pressures	ALL Pressures	-	ALL Pressures
M	-	ALL Pressures	ALL Pressures	ALL Pressures	-	ALL Pressures	ALL Pressures	-	ALL Pressures
N	-	ALL Pressures	(Same as	ALL Pressures	-	ALL Pressures	ALL Pressures	-	ALL Pressures
P	-	ALL Pressures	Low Pressure Air/Gas)	ALL Pressures	-	ALL Pressures	ALL Pressures	-	ALL Pressures
Q	-	ALL Pressures	ALL Pressures	ALL Pressures	-	ALL Pressures	ALL Pressures	-	ALL Pressures
R	-	ALL Pressures	(Same as	ALL Pressures	-	ALL Pressures	ALL Pressures	-	ALL Pressures
T-4	-	ALL Pressures	Low Pressure Air/Gas)	-	-	ALL Pressures	ALL Pressures	-	ALL Pressures
U	-	ALL Pressures	ALL Pressures	-	-	ALL Pressures	ALL Pressures	-	ALL Pressures
V	-	15-300 psig (1.03 - 20.68 barg)	(Same as	-	-	15-300 psig (1.03 - 20.68 barg)	-	-	-
W	7-14 psig (0.48 - 0.97 barg)	15-300 psig (1.03 - 20.68 barg)	Low Pressure Air/Gas)	-	7-14 psig (0.48 - 0.97 barg)	15-300 psig (1.03 - 20.68 barg)	-	-	-

Table 8b: Disc Holder Selection Crteria (UM)

Orifice	Low Pressure Disc Holder		Medium Pressure Disc Holder		High Pressure Disc Holder	
	psig	barg	psig	barg	psig	barg
D-F	50 & below	3.45 & below	51 - 100	3.52 - 6.89	101 and Above	6.96 and Above
G	80 & below	5.52 & below	-	-	81 and Above	5.58 and Above
H	60 & below	4.14 & below	-	-	61 and Above	4.21 and Above
J	40 & below	2.76 & below	-	-	41 and Above	2.83 and Above
K-U	Not Applicable	Not Applicable	-	-	All Pressures	All Pressures
V-W	Not Applicable	Not Applicable	-	-	15 and Above	1.03 and Above

XI. Maintenance (Contd.)

Determining the Correct Limit Washer Length

Determine the correct limit washer length (see Figure 35) as follows:

1. Assemble the disc (6) and disc holder (8) (installing the bellows gasket and bellows, if applicable) as follows:

ATTENTION!

Do not use an impact wrench on bellows valves.

   - Place the guide over the disc holder barrel and connect the spindle (15) to the disc holder (8).
   - Install the eductor tube (40) in base (1), if applicable.
   - Install the adjusting ring (3) below the seat.
2. Install the guide gasket (10), and insert the disc assembly from Step 1 into the base (1).
3. Install the bonnet gasket (12) and bonnet (11) (leaving out the spring assembly at this time).
4. Tighten the stud nuts (14) to compress the bonnet gasket (12).
5. Place a dial indicator on the bonnet (11) and over the spindle (15) and then zero the indicator. Measure total lift by pushing the disc (6) upward. Subtract the required lift of the valve from the measured lift to find the required limit washer length.
6. Machine the limit washer to the required length.
7. Machine the inside chamfer, deburring and polishing as required.
8. Disassemble the valve.
9. Install the limit washer with the chamfer down and reassemble the valve as described in Steps 2 through 4.
10. Measure the lift of the valve and compare it with the required lift as given on the restricted lift nameplate (-0.000", +0.005" [-0.000 mm, +0.127 mm]). Take one of the following steps, based on the results, if the lift is not correct:
    - If the actual lift is less than required, machine the limit washer as necessary to obtain the required lift. (Machine chamfer, deburr and polish before installation into the valve.)
    - If the actual lift is greater than required, obtain a new limit washer, and return to Step 7. (Machine chamfer, deburr and polish before installation into valve.)
11. Once correct lift is obtained, disassemble the valve.

ATTENTION!

Ensure the limit washer has been chamfered to fit over the radius of the disc holder (8). The limit washer must be installed so that the chamfered end is mating to the back face of disc holder.

ATTENTION!

Check all dimension requirements for each valve. Do not interchange internal parts or use a different base after a set of parts has been custom-fit.

ATTENTION!

For bellows Type D and E valves, check the outside diameter and, if necessary, emery cloth down to .680˝ (17.3 mm) maximum diameter in order to avoid interference with the bellows threads.

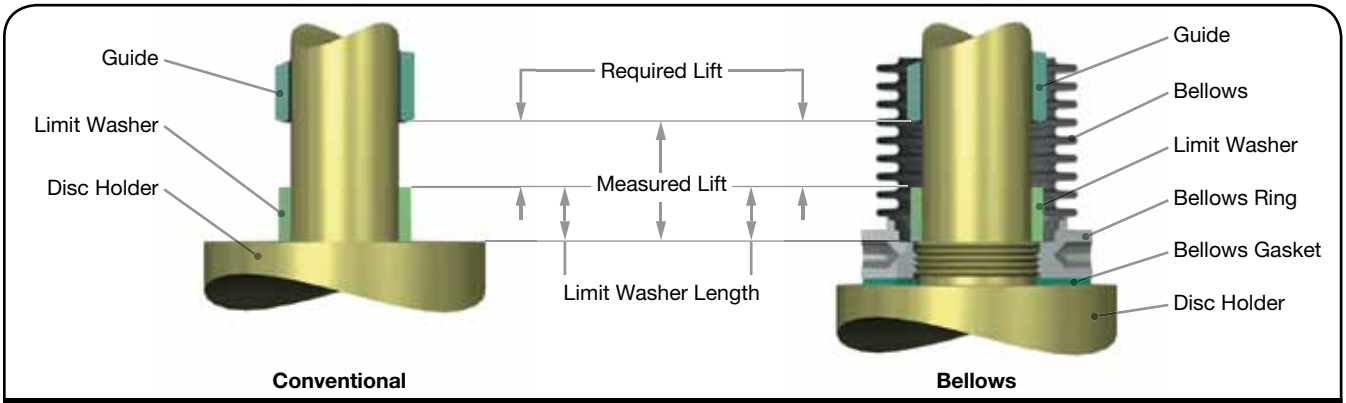

Figure 35: Determining Lift and Limit Washer Length

XII. Reassembly

General Information

The 1900™ Series SRV can be easily reassembled after the required internal parts maintenance has been performed. All parts should be clean before reassembly.

Preparation

Before beginning reassembly take these steps as follows:

1. Inspect guiding surfaces, bearing surfaces, flange faces, retainer recesses, and grooves for cleanliness (See Replacement Parts Planning for recommended compounds and tools).
2. Check all gaskets used during reassembly. Reuse undamaged, solid metal gaskets (not pitted or creased) and replace all soft gaskets.
3. Before installing the (flat) gaskets, apply a light uniform coating of lubricant to the surface to be sealed. Then coat the top of the gasket with lubricant.
4. If lapping of bearing points was necessary, ensure all lapping compound is removed. Then, thoroughly clean both surfaces and rinse with alcohol or another suitable cleaner.
5. Apply a light, uniform layer of lubricant to each bearing surface.
6. If the valve has an O-ring seat seal or Teflon seal (UM DA), the O-ring or Teflon should be replaced. Please refer to its tag plate (see Figure 36) to determine O-ring material and “as-built” part number.

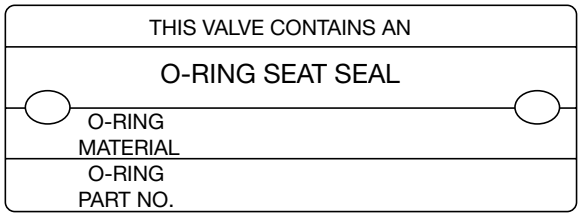

Figure 36: Valve O-Ring Tag

Lubrication

Use a nickel-based, anti-seize lubricant on all threads and bearing surfaces. Recommended lubricant is Jet – Lube, Dresser Non-metallic, product code #14613.

Reassembly Procedure

1. If the nozzle (2) was removed, apply thread lubricant to the nozzle threads before reinstalling it in the valve base (1).
2. Insert the nozzle (2) into the inlet flange of the base (1) and torque to the correct value (see Table 9).

Table 9: Nozzle Torque (Values +10% - 0%)

Orifice		Required Torque	
Std.	UM	ft-lbs	Nm
D-2	D	165	224
E-2	E	165	224
F	F	165	224
G	G	145	197
H	H	165	224
J	J	335	454
K	K	430	583
L	L	550	746
M	M	550	746
N	N	640	868
P	P	1020	1383
Q	Q	1400	1898
R	R	1070	1451
T-4	T	1920	2603
U	U	1920	2603
V	V	1960	2657
W	W	2000	2712

3. Install the adjusting ring (3) on the nozzle (2) below the seat level so that the disc (6) will seat on the nozzle and not on the adjusting ring.
4. For restricted lift valves:
   - If the nozzle (2) did not require machining, the same limit washer (tagged during disassembly) may possibly be reused. However, lift should be checked and verified as described in Checking Lift on Lift-Restricted Valves.
   - If the nozzle was remachined, measure the required lift as described in Checking Lift on Lift-Restricted Valves and replace limit washer if necessary.
5. Assemble the disc/disc holder as follows:
   - Before assembly of the disc (6) into the disc

XII. Reassembly (Contd.)

holder (8), remove the disc retainer (7) from the back of the disc.

- Use 1000-grit lapping compound on the bearing surface to lap the disc (6) into the disc holder (8) and to properly establish the bearing surface.
- For D through U orifice valves with metal-to-metal discs (see Figure 1 to 6), place the disc retainer (7) into the groove in the disc (6). The retainer should "snap" into the disc holder (8) with moderate finger or hand force. Check that the disc "rocks" after set in place.

ATTENTION!

Do not use excessive force to insert the disc (6) into the disc holder (8).

- For V and W orifice discs (see Figure 9), place the disc into the disc holder and secure it with disc retaining bolts.
- For O-ring disc sizes D through J (see Figure 10a), reassemble the disc holder using a new O-ring Seat Seal, O-ring retainer, and retainer lock screw(s).
- For O-ring disc sizes K through U (see Figure 10b), reassemble the disc using a new O-ring Seat Seal, O-ring retainer, and retainer lock screws. Assemble the disc into the disc holder.
- For soft-seat (UM DA) discs (see Figure 10c), reassemble the disc using a new Teflon seal, soft-seat retainer, and retainer lock screw(s).

6. Install the bellows gasket and bellows ring as follows:
   - For bellows valves D through U (see Figure 7):
     - Clamp the stem portion of the disc holder (8), barrel-end up, firmly between two wooden V-blocks in a vise.
     - Place a new bellows gasket on the disc holder.
     - Thread the bellows ring, hand-tight, down to the gasket on the disc holder.
     - Use a pin spanner wrench or special cabletype wrench to tighten the bellows ring until a pressure-tight joint is formed.
   - For bellows valves V and W:
     - Place a new bellows gasket on the disc holder.
     - Bolt the assembly in place and tighten bolts to 7-9 ft-lbs (9.5-12.2 Nm).
7. On restricted lift valves, install the limit washer with the chamfered side down.
8. For D through U valves:
   - Place the guide (9) over the disc holder (8). If bellows are present, the weight of the guide will slightly compress the bellows.
   - For V and W orifi ce valves:

     Install guide rings into the grooves located inside the guide ID. Make sure the space where the upper and lower guide ring ends meet is positioned 180° apart. Mark both the guide and disc holder at the point where the bottom guide ring ends meet. This mark must be faced 180° away from the outlet when the assembly is place into the valve. Gently lower the guide down onto the disc holder ensuring that guide rings remain in their respective groove.
9. Set the disc holder (8), disc side down, on the work surface. Place a small amount of 1000- grit lapping compound onto the ball end of the spindle (15) and place it in the spindle socket of the disc holder. Turn the spindle clockwise and then counterclockwise to seat the spindle/disc holder bearing point. When finished, clean lapping compound from all parts.
10. Spread a small amount of 320-grit lapping compound on the spring washer bearing surface.
11. Place the spring washer (17) over the spindle/spring washer bearing surface and turn it clockwise and then counterclockwise to seat it on the bearing surface. In the same manner, lap the adjusting screw (19) into the bearing surface of the upper spring washer to establish a smooth bearing surface. When finished, clean lapping compound from all parts.
12. Place the spindle retainer (16) over the end of the spindle head or disc holder (8), as applicable.
13. Apply lubricant sparingly to the ball tip of the spindle (15).
14. Place a new guide gasket (10) in the base (1).
15. Install the spindle/disc guide assembly as follows:
    - For D through L size valves:
      - Place the spindle (15) in the disc holder (8) and align the spindle retainer (16) so that the gap is midway between the two slots.

XII. Reassembly (Contd.)

- Use a screwdriver to compress the spindle retainer and guide it into the retaining groove. Ensure the spindle turns freely.
- Lift complete assembly and carefully lower it into the valve base (1).
- Ensure proper fit for a conventional valve by aligning the hole in the guide (9) over the extended end of the eductor tube (40).

- For M through U size valves:
  - Install lifting tool (see Figure 14a) onto disc holder and carefully lower the disc holder assembly into the valve base.
  - Ensure proper fit for a conventional valve by aligning the hole(s) in the guide over the extended end of the eductor tube(s).
  - Then, install the spindle in the disc holder and align the spindle retainer so that the gap is midway between the two slots.
  - Use a screwdriver to compress the spindle retainer and guide it into the retaining groove. Ensure the spindle turns freely.
- For V and W size valves:
  - Using the same lifting lugs used during disassembly (see Figure 14b), carefully lower the disc holder assembly into the valve base.
  - Install the spindle in the disc holder and align the spindle retainer so that the gap is midway between the two slots.
  - Use a screwdriver to compress the spindle retainer and guide it into the retaining groove. Ensure the spindle turns freely.

16. Apply a small quantity of lubricant to the spring washer bearing surface of the spindle (15).
17. Place the spring assembly on the spindle (15).
18. Place a new bonnet gasket (12) in the base (1) before installing the bonnet (11). Uniformly tighten the stud nuts (14) using the appropriate bolt tightening pattern (see Figure 37). Determine the required torque for the subject valve (see Table 10). Determine the torque values for each round of the pattern (see Table 11). The last round ensures that all stud nuts are at the required torque.
19. With the adjusting screw locknut (20) assembled near the top of the adjusting screw (19), apply a small quantity of lubricant to the spherical end and threads of the adjusting screw.
20. Thread the adjusting screw (19) into the bonnet (11) until it contacts the spring washer (17).

Table 10: Bonnet Nut Torque

Orifice		1905		1906		1910		1912		1914		1916		1918	
Std.	UM	ft lb	Nm	ft lb	Nm	ft lb	Nm	ft lb	Nm	ft lb	Nm	ft lb	Nm	ft lb	Nm
D-2	D	55	75	55	75	55	75	60	81	60	81	60	81	120	163
E-2	E	55	75	55	75	55	75	60	81	60	81	60	81	120	163
F	F	55	75	55	75	55	75	60	81	70	95	70	95	115	156
G	G	55	75	55	75	55	75	60	81	70	95	70	95	75	102
H	H	90	122	90	122	60	81	75	102	65	88	65	88	----	----
J	J	60	81	60	81	75	102	100	136	100	136	100	136	----	----
K	K	65	88	65	88	60	81	60	81	135	183	145	197	----	----
L	L	75	102	75	102	90	122	90	122	140	190	140	190	----	----
M	M	95	129	95	129	110	149	95	129	95	129	----	----	----	----
N	N	105	142	105	142	130	176	85	115	85	115	----	----	----	----
P	P	120	163	120	163	145	197	125	169	125	169	----	----	----	----
Q	Q	105	142	105	142	125	169	150	203	----	----	----	----	----	----
R	R	115	156	115	156	115	156	135	183	----	----	----	----	----	----
T-4	T	95	129	95	129	95	129	----	----	----	----	----	----	----	----
U	U	95	129	95	129	95	129	----	----	----	----	----	----	----	----
V	V	130	176	130	176	130	176	----	----	----	----	----	----	----	----
W	W	130	176	130	176	130	176	----	----	----	----	----	----	----	----

XII. Reassembly (Contd.)

Table 10: Bonnet Nut Torque (Contd.)

Orifice		1920		1921		1922		1923		1924		1926		1928	
Std.	UM	ft lb	Nm	ft lb	Nm	ft lb	Nm	ft lb	Nm	ft lb	Nm	ft lb	Nm	ft lb	Nm
D-2	D	55	75	----	----	55	75	----	----	60	81	60	81	115	156
E-2	E	55	75	----	----	55	75	----	----	60	81	60	81	115	156
F	F	55	75	----	----	55	75	----	----	70	95	70	95	115	156
G	G	55	75	----	----	60	81	----	----	70	95	70	95	75	102
H	H	60	81	----	----	60	81	----	----	75	102	85	115	----	----
J	J	75	102	----	----	75	102	----	----	100	136	100	136	----	----
K	K	60	81	----	----	60	81	----	----	60	81	140	190	----	----
L	L	90	122	----	----	90	122	----	----	140	190	140	190	----	----
M	M	90	122	----	----	95	129	----	----	95	129	----	----	----	----
N	N	130	176	----	----	85	115	----	----	85	115	----	----	----	----
P	P	145	197	----	----	----	----	125	169	125	169	----	----	----	----
Q	Q	105	142	----	----	150	203	----	----	----	----	----	----	----	----
R	R	115	156	----	----	135	183	----	----	----	----	----	----	----	----
T-4	T	125	169	----	----	----	----	----	----	----	----	----	----	----	----
U	U	125	169	----	----	----	----	----	----	----	----	----	----	----	----
V	V	130	176	----	----	----	----	----	----	----	----	----	----	----	----
W	W	130	176	----	----	----	----	----	----	----	----	----	----	----	----

- For V and W orifices, use the setting device to assemble the spring plunger and adjusting screw. Contact the factory for procedure on how to use the setting device.

21. Use pliers to hold the spindle (15) and prevent it from turning in the disc holder (8). Turn the adjusting screw (19) clockwise until the original distance between the end of the spindle and the top of the adjusting screw is obtained. This method of compressing the spring (18) will approximately reestablish the original set pressure. The valve must still be reset for the required pressure.
22. Restore the adjusting ring (3) to its original position, with reference to the disc holder (8), as recorded.
23. Fit the adjusting ring pin (4) with a new adjusting ring pin gasket (5).
24. Install the adjusting ring pin (4) in the valve assembly in the original position. If the original position is not known, verify the number of notches on the adjusting ring (3) and refer to Tables 12, 13, 14 or 15 depending on the valve serial number or trim. Set the ring position according to the applicable set pressure and orifice size.

The valve is now ready for setting and testing.

Table 11: Torque Required for Each Round of Pattern

Round	Percentage of Required Torque
1	Wrench Tight
2	25
3	60
4	100
5	100

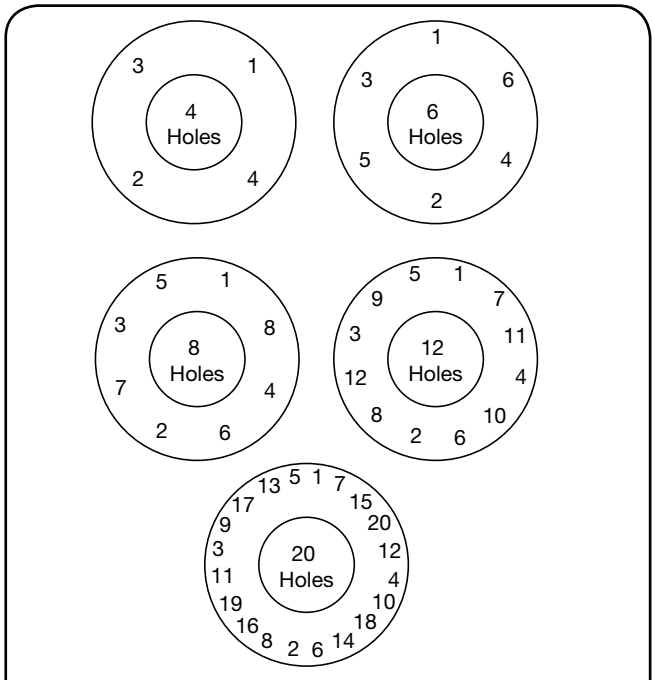

Figure 37: Bolt Tightening Patterns

XII. Reassembly (Contd.)

Table 12: Adjusting Ring Setting (Standard Trim)

Orifice	No. of Notches	Set ≤ [100 psig (6.90 barg)][1]	Set > [100 psig (6.90 barg)][1]
D-2	24	2 Notches	6 Notches
E-2	24	2 Notches	6 Notches
F	24	2 Notches	6 Notches
G	30	2 Notches	6 Notches
H	30	2 Notches	6 Notches
J	30	2 Notches	8 Notches
K	32	2 Notches	7 Notches
L	40	4 Notches	11 Notches
M	40	4 Notches	12 Notches
N	40	4 Notches	13 Notches
P	40	5 Notches	16 Notches
Q	48	8 Notches	25 Notches
R	48	10 Notches	30 Notches
T-4	24	6 Notches	19 Notches
U	24	6 Notches	19 Notches
V	24	10 Notches	30 Notches
W	24	10 Notches	30 Notches

Note 1: Position Below Disc Holder

Table 13: Adjusting Ring Setting (Liquid Trim)

Orifice	No. of Notches	Metal Seat Liquid Trim (MS - LA)[1]	Soft Seat Liquid Trim (DA - LA)	
		Position[2]	Pressure Range	Position[2]
D-2	24	5 Notches	Set < 100 psig (6.89 barg) Set > 100 psig (6.89 barg)	1 Notch[3] 3 Notches[3]
E-2	24	5 Notches	Set < 100 psig (6.89 barg) Set > 100 psig (6.89 barg)	1 Notch[3] 3 Notches[3]
F	24	5 Notches	Set < 100 psig (6.89 barg) Set > 100 psig (6.89 barg)	1 Notch[3] 3 Notches[3]
G	30	5 Notches	Set < 100 psig (6.89 barg) Set > 100 psig (6.89 barg)	1 Notch 5 Notches
H	30	5 Notches	All Pressures	7 Notches[3]
J	30	5 Notches	Set < 80 psig (5.52 barg) Set > 80 psig (5.52 barg)	1 Notch[3] 5 Notches[3]
K	32	5 Notches	All Pressures	5 Notches
L	40	5 Notches	All Pressures	5 Notches
M	40	5 Notches	All Pressures	5 Notches
N	40	5 Notches	All Pressures	5 Notches
P	40	5 Notches	All Pressures	5 Notches
Q	48	5 Notches	All Pressures	5 Notches
R	48	5 Notches	All Pressures	5 Notches
T-4	24	5 Notches	All Pressures	5 Notches
U	24	5 Notches	All Pressures	5 Notches

Note 1: MS-LA uses standard trim adjusting ring

Note 2: Position Below Disc Holder

Note 3: Ring setting to be made with no pressure acting on the valve and no compression on the spring

Table 14: Ring Settings for Universal Media Valves

Orifice	No. of Notches	Affected Set Pressure Range & Adjusting Ring Position[1]																			
		3 Notches				5 Notches				10 Notches				15 Notches				20 Notches			
		psig		barg		psig		barg		psig		barg		psig		barg		psig		barg	
D	24	0	100	0	6.89	101	200	6.96	13.79	201	400	13.86	27.58	401	800	27.65	55.16	801	1600	55.23	110.32
E	24	0	100	0	6.89	101	200	6.96	13.79	201	400	13.86	27.58	401	800	27.65	55.16	801	1600	55.23	110.32
F	24	0	300	0	20.68	301	600	20.75	41.37	601	1200	41.44	82.74	1201	2400	82.81	165.47	2401	4800	165.54	330.95
G	30	0	200	0	13.79	201	400	13.86	27.58	401	800	27.65	55.16	801	1600	55.23	110.32	1601	3200	110.39	220.63
H	30	0	100	0	6.89	101	200	6.96	13.79	201	400	13.86	27.58	401	800	27.65	55.16	801	1600	55.23	110.32
J	30	-	-	-	-	0	50	0.00	3.45	51	125	3.52	8.62	126	250	8.69	17.24	251	500	17.31	34.47
K	32	-	-	-	-	0	50	0.00	3.45	51	125	3.52	8.62	126	250	8.69	17.24	251	500	17.31	34.47
L	40	-	-	-	-	0	50	0.00	3.45	51	125	3.52	8.62	126	250	8.69	17.24	251	500	17.31	34.47
M	40	-	-	-	-	0	25	0.00	1.72	26	50	1.79	3.45	51	125	3.52	8.62	126	250	8.69	17.24
N	40	-	-	-	-	0	25	0.00	1.72	26	50	1.79	3.45	51	125	3.52	8.62	126	250	8.69	17.24
P	40	-	-	-	-	0	25	0.00	1.72	26	50	1.79	3.45	51	125	3.52	8.62	126	250	8.69	17.24
Q	48	-	-	-	-	-	-	-	-	0	25	0.00	1.72	26	50	1.79	3.45	51	100	3.52	6.89
R	48	-	-	-	-	-	-	-	-	-	-	-	-	0	25	0.00	1.72	26	50	1.79	3.45
T	24	-	-	-	-	0	25	0.00	1.72	26	50	1.79	3.45	51	100	3.52	6.89	101	200	6.96	13.79
U	24	-	-	-	-	-	-	-	-	-	-	-	-	0	25	0.00	1.72	26	50	1.79	3.45
V	24	-	-	-	-	-	-	-	-	-	-	-	-	0	25	0.00	1.72	26	50	1.79	3.45
W	24	-	-	-	-	-	-	-	-	-	-	-	-	0	25	0.00	1.72	26	50	1.79	3.45

Note 1: Position Relative to Disc Holder

XII. Reassembly (Contd.)

Table 14: Ring Settings for Universal Media Valves (Contd.)

Orifice	No. of Notches	Affected Set Pressure Range & Adjusting Ring Position[1]															
		25 Notches				30 Notches				35 Notches				40 Notches			
		psig		barg		psig		barg		psig		barg		psig		barg	
D	24	1601	3200	110.39	220.63	3201	6250	220.70	430.92	-	-	-	-	-	-	-	-
E	24	1601	3200	110.39	220.63	3201	6250	220.70	430.92	-	-	-	-	-	-	-	-
F	24	4801	6250	331.02	430.92	-	-	-	-	-	-	-	-	-	-	-	-
G	30	3201	5000	220.70	344.74	-	-	-	-	-	-	-	-	-	-	-	-
H	30	1601	3200	110.39	220.63	3201	3300	220.70	227.53	-	-	-	-	-	-	-	-
J	30	1001	2000	69.02	137.90	2001	3100	137.96	213.74	-	-	-	-	-	-	-	-
K	32	1001	2000	69.02	137.90	2001	3000	137.96	206.84	-	-	-	-	-	-	-	-
L	40	1001	2000	69.02	137.90	2001	2900	137.96	199.95	-	-	-	-	-	-	-	-
M	40	251	500	17.31	34.47	501	1000	34.54	68.95	1001	1600	69.02	110.32	-	-	-	-
N	40	251	500	17.31	34.47	501	1000	34.54	68.95	1001	1600	69.02	110.32	-	-	-	-
P	40	251	500	17.31	34.47	501	1000	34.54	68.95	1001	1700	69.02	117.21	-	-	-	-
Q	48	101	200	6.96	13.79	201	400	13.86	27.58	401	900	27.65	62.05	-	-	-	-
R	48	51	100	3.52	6.89	101	200	6.96	13.79	201	400	13.86	27.58	401	650	27.65	44.82
T	24	201	360	13.86	24.82	-	-	-	-	-	-	-	-	-	-	-	-
U	24	51	100	3.52	6.89	101	200	6.96	13.79	201	360	13.86	24.82	-	-	-	-
V	24	51	100	3.52	6.89	101	200	6.96	13.79	201	300	13.86	20.68	-	-	-	-
W	24	51	100	3.52	6.89	101	200	6.96	13.79	201	300	13.86	20.68	-	-	-	-

Note 1: Position Relative to Disc Holder

ATTENTION!

If the valve has an O-ring seat seal, tighten and lock the adjusting screw (19) before final setting of the adjusting ring (3).

ATTENTION!

Ensure the adjusting ring pin (4) enters the notch in the adjusting ring (3) but does not bind the adjusting ring. If binding occurs, cut the adjusting ring pin until adjusting ring moves freely from side-to-side within the notch.

XIII. Setting and Testing

General Information

Before putting the reconditioned valve in service, it must be set to open at the required set pressure as shown on the nameplate. Although the valve can be set on the service installation, it is more convenient to set the valve and check seat tightness on a test stand. Any spring replacement shall be in accordance with current Dresser guidelines.



Test Equipment

The test stand used for testing SRVs normally consists of a pressure source supply line with a throttle valve and receiver that have the following features:

- Outlet for attaching the valve to be tested
- Pressure gauge with a shut-off valve
- Drain line with a shut-off valve
- Adequate receiver volume for the valve to be tested and to achieve proper operation



Test Media

For best results, valves shall be tested by type as follows:

- Steam valves are tested on saturated steam.
- Air or gas valves are tested on air or gas at ambient temperature.
- Liquid valves are tested on water at ambient temperature.

Setting the Valve

Set the valve to open at the set pressure as shown on the nameplate. If a cold differential set pressure is indicated on the nameplate, set the valve to open at that pressure. (The cold differential set pressure is the set pressure corrected to compensate for backpressure and/or operating temperature.) A new cold differential set pressure may need to be determined if changes are to be made to the set pressure or backpressure or if the service temperature changes.

Set Pressure Compensation

Cold Differential Set Pressure for Temperature Compensation

During production testing, the SRV is often tested at temperatures that are different from the temperatures the SRV will be exposed to in service. Increasing the temperature from ambient temperature causes the set pressure to decrease. The decrease in set pressure is due to thermal expansion of the seating area and spring relaxation. Therefore, it is important to compensate for the difference between production test temperature and service temperature. The service temperature is the normal operating temperature of the SRV. If the operating temperature is unavailable, do not correct the SRV set pressure.

Table 15 lists the set pressure multipliers to be used when computing the cold differential set (CDS) pressure for valves being set on an air or water test stand at ambient temperatures.

stand at ambient temperatures.

Valves to be used in saturated steam service are tested on saturated steam. Therefore, no CDS is required. However, valves in superheated steam service are tested on saturated steam and require a CDS.

XIII. Setting and Testing (Contd.)

Table 15: Set Pressure Multipliers for Cold Differential Set Pressure at Ambient Temperature

Operating Temp.		Multiplier	Operating Temp.		Multiplier
^{0}F	^{0}C		^{0}F	^{0}C	
250	120	1.003	900	498	1.044
300	149	1.006	950	510	1.047
350	177	1.009	1000	538	1.050
400	204	1.013	1050	565	1.053
450	248	1.016	1100	593	1.056
500	260	1.019	1150	621	1.059
550	288	1.022	1200	649	1.063
600	316	1.025	1250	676	1.066
650	343	1.028	1300	704	1.069
700	371	1.031	1350	732	1.072
750	415	1.034	1400	760	1.075
800	427	1.038	1450	788	1.078
850	454	1.041	1500	815	1.081

Table 16: Set Pressure Multipliers for Cold Differential Set Pressure

Superheat Temperature		
Degrees of Superheat, Temp. above Sat.		Multiplier
^{0}F	^{0}C	
100	55.6	1.006
200	111.1	1.013
300	166.7	1.019
400	222.2	1.025
500	277.8	1.031
600	333.3	1.038
700	388.9	1.044
800	444.4	1.050

Table 16 lists the multiplier to be used based on temperature above the saturated temperature (degrees of superheat).

Cold Differential Set Pressure for Back Pressure Compensation

ATTENTION!

Install a bellows to allow the set pressure to remain constant for valves with variable superimposed backpressure.

When a conventional 1900™ Series SRV operates with a constant backpressure, the cold differential set (CDS) pressure is the set pressure minus the constant backpressure.

When a 1900™-30 D-1 or 1900™-30 E-1 nonbalanced bellows valve is used with constant backpressure, the set pressure must be compensated. This valve design cannot be used for variable backpressure. If the valve's set pressure or backpressure changes, call Dresser Field Service at (318) 640-6055 for the CDS of the valve.

When Consolidated® Type 1900™-30 D-2, 1900™-30 E-2, and 1900™-30 F through W balanced bellows valves are used with constant or variable backpressure, no compensation to the valve's set pressure is required due to backpressure.

Sample Calculations for 1900™ Series Consolidated® Safety Relief Valve

Set pressure 2500 psig (172.37 barg), temperature 500ºF (260ºC), backpressure atmospheric.

Set Pressure.....2500 psig (172.37 barg)
Multiplier (see Table 16)..... X1.019
Cold Differential Set Pressure.....2548 psig (175.68)

Set pressure 2500 psig (172.37 barg), temperature 500ºF (260ºC), constant backpressure.....150 psig (10.34 barg)

Set Pressure.....2500 psig (172.37 barg)
Minus Constant Back Pressure... -150 psig (-10.34 barg)
Differential Pressure .....2350 psig (162.03 barg)
Multiplier (see Table 16).....X1.019
Cold Differential Set Pressure..... 2395 psi

Set pressure 2500 psig (172.37 barg), temperature 100º F (260ºC), constant backpressure.....150 psig (10.34 barg)

Set Pressure.....2500 psig (172.37 barg)
Minus Constant Back Pressure... -150 psig (-10.34 barg)
Cold Differential Set Pressure.....2350 psig (162.03 barg)

Set pressure 400 psig (27.58 barg) on superheated steam, temperature 650º F (343.3 ºC), backpressure atmospheric Operating Temperature .....650º F (343.3 ºC)

Minus Temperature of Saturated Steam at 400 psig (27.58 barg) .....-448º F (-266.7ºC)
Degrees of Superheat..... 202º F (94.4ºC)
Set Pressure.....400 psig (27.58 barg)
Multiplier (see Table 16).....X1.013
Cold Differential Set Pressure.....405 psig (27.92 barg).

XIII. Setting and Testing (Contd.)

Setting the Pressure

ATTENTION!

- Ensure valves for steam service are set using saturated steam.
- Ensure valves for gaseous service are set using air or nitrogen.
- Ensure valves for liquid service are set using water.

ATTENTION!

The ASME Boiler and Pressure Vessel Code Section VIII set pressure tolerance is +/- 2 psi (.14 bar) for set pressures less than 70 psi (4.8 bar) and +/- 3% for pressures equal to or greater than 70 psi (4.8 bar).

1. Before mounting the valve on the test stand, remove all dirt, sediment, or scale from the test tank nozzle and the inlet port of the valve. Ensure the test gauge has recently been calibrated on a deadweight gauge tester.
2. Mount the valve on the test stand.
3. If the adjusting screw (19) of the reconditioned

ATTENTION!

Hold the spindle (15) and ensure it is centrally located within the adjusting screw (19) when turning the adjusting screw. Hard-rubbing of the spindle against the side of the adjusting screw can cause poor valve action.

valve has been turned down to its original position, slowly bring the pressure up in the test tank to the CDS pressure. If the valve opens before the desired pressure is reached, additional compression is required on the spring (18), as follows:

- Hold the spindle (15) to prevent rotation and turn the adjusting screw clockwise.
- If the valve does not open at the desired pressure, maintain the required pressure in the test tank and slowly release the compression on the spring by turning the adjusting screw counterclockwise until the valve opens.
- Continue adjustment until the valve opens at the desired pressure.

ATTENTION!

On compressible fluids, set pressure is defined as the pressure where the valve pops open, NOT as the pressure when it begins to simmer.

ATTENTION!

On liquid valves, set pressure is indicated by the ftrst continuous flow of water from the valve outlet.

4. After the required set pressure is obtained, tighten the adjusting screw locknut (20) and repeat the test. Obtain at least two repeat openings at the same pressure to ensure the valve is set accurately.

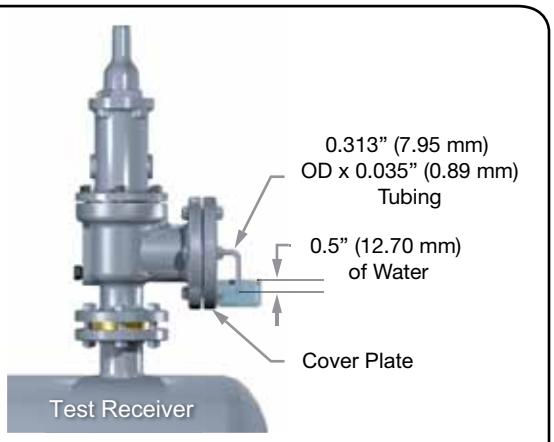

Figure 38: Typical Test Arrangement

Seat Tightness Testing

General Information: Set up a typical test arrangement for determining seat tightness for SRVs on air or gas service (in accordance with ANSI B147.1/API RP 527) (see Figure 38).

ATTENTION!

Do not use soap or household detergent as a leak detector as it may bridge small leaks.

1. Cut the end of a piece of .313˝ (7.93 mm) OD tubing with .035˝ (0.89 mm) wall so that itis square and smooth.
2. Insert the tubing so that it is perpendicular to and .5˝ (12.7 mm) below the surface of the water.
3. Use the tubing to take a leakage measurement.

Seat Tightness Testing: Metal-to-Metal Seats

1. With the valve mounted vertically (see Figure 38), determine the leakage rate, in bubbles per minute, with pressure at the SRV inlet held at 90% of the set pressure immediately after popping. For valves set at 50 psig (3.45 barg) or below, hold pressure at 5 psig (0.34 barg) below set point. The test pressure shall be applied for a minimum of 1 minute

XIII. Setting and Testing (Contd.)

Table 17: Valve Leakage Rate (Metal Seat)							
Set Pressure (60°F or 15.6°C)		Valve Orifice D & E			Valve Orifice F and Larger		
		Approximate Leakage per 24 hrs			Approximate Leakage per 24 hrs		
Pressure		Leakage Rate (Bubbles per Minute)	ft^3	m^3	Leakage Rate (Bubbles per Minute)	ft^3	m^3
(psig)	(barg)						
15-1000	1.03-68.95	40	0.6	0.02	20	0.3	0.01
1500	103.42	60	0.9	0.03	30	0.45	0.01
2000	137.90	80	1.2	0.03	40	0.6	0.02
2500	172.37	100	1.5	0.04	50	0.75	0.02
3000	206.84	100	1.5	0.04	60	0.9	0.03
4000	275.79	100	1.5	0.04	80	1.2	0.03
5000	344.74	100	1.5	0.04	100	1.5	0.04
6000	413.69	100	1.5	0.04	100	1.5	0.04

for valves on inlet sizes through 2″ (50.8 mm); 2 minutes for sizes 2.5″ (63.5 mm), 3″ (76.2 mm) and 4″ (101.6 mm), and 5 minutes for the 6″ (152.4 mm), 8″ (203.2 mm), 10″ (254 mm) and 12″ (304.8 mm) sizes. For metal-to-metal valves designated for gaseous service, the leakage rate shall not exceed maximum bubbles per minute (see Table 16).

2. Check that there is no visible leakage for valves designated for steam service (and tested on steam) or for liquid service (and tested on water).

Seat Tightness Testing for O-Ring Seat Seal Valve

The tightness standard for O-ring seat seal valves shall be no leakage at or below the test pressures listed (see Table 18).

Table 18: Leakage Rate (Soft Seat)			
Set Pressure		Test Pressure (1)	
(psig)	(barg)	(psig)	(barg)
3	2.07	1.5	1.03
4	2.76	2	1.38
5	3.45	2.5	1.72
6	4.14	3	2.07
7.0 – 14.0	4.83 – 9.65	3.0 below Set	2.07 below set
15.0 – 30.0	10.34 – 20.68	90% of Set	90% of Set
31.0 – 50.0	22.06 – 34.47	92% of Set	92% of Set
51.0 – 100.0	35.16 – 68.95	94% of Set	94% of Set
Set > 100.0	Set > 68.95	95% of Set	95% of Set
1. Set pressures below 15 psig are outside the scope of API 527.			

Recommended Backpressure Testing for Joint Leakage

If the valve is to be used in a closed discharge system, backpressure-test the valve after it has been set for the correct opening pressure. Conduct testing by installing the screwed cap (21) with a cap gasket (27) and applying air or nitrogen to the base drain connection or to the valve outlet. Seal all other openings.

Test pressure should be the greater of 30 psig (2 barg) or the actual valve backpressure. Hold air or nitrogen pressure for 3 minutes before applying leak detector solution to all connections (joints).

On bellows valves, hand-tighten a clean pipe plug in the bonnet vent connection in order to obtain the smallest possible leak path. Remove this plug after the test.

Apply liquid leak detector to the following SRV components and examine for leakage during backpressure testing:

- Nozzle/base joint.
- Adjusting ring pin seal.
- Base/bonnet joint.
- Bonnet/cap joint.
- “Tight” bonnet vent plug, if conventional valve.
- “Loose” bonnet vent plug, if bellows valve.



XIII. Setting and Testing (Contd.)

If a leak is discovered, attempt repair of the leaking joint(s) by tightening it while the SRV is still on the stand. If the leak continues, tear down the leaking joint(s) and inspect both the metal surface(s) and gasket(s). If the valve internals have been disturbed, it is necessary to retest in accordance with the instructions within this manual. Otherwise, repeat the backpressure tests outlined above.

Blowdown Adjustment

Blowdown adjustments are made by means of the adjusting ring (3) on 1900™

Series SRVs.

If longer or shorter blowdown is required, it can be obtained as follows:

To increase the blowdown (lower reseating pressure), raise the adjusting ring (3) by moving the notches from left to right past the ring pin hole.

ATTENTION!

Unless the test stand capacity is equal to or greater than that of the valve, return the adjusting ring (3) to the recommended position and do not attempt to set blowdown (see Tables 12 through 15).

ATTENTION!

The valve will not achieve rated relieving capacity if the adjusting ring (3) is positioned too low.

To decrease the blowdown (raise reseating pressure), lower the adjusting ring by moving the notches from right to left past the adjusting ring pin hole.

XIV. Hydrostatic Testing and Gagging

When hydrostatic tests are required after installation of an SRV, remove the SRV and replace it with a blind flange If the hydrostatic test pressure will not be greater than the operating pressure of the equipment, a test gag may be used. Very little force, i.e. hand-tight pressure, on the test gag is sufficient to hold hydrostatic pressures. Too much force applied to the gag may bend the spindle (15) and damage the seat. After a hydrostatic test, the gag must be removed and replaced by the sealing plug furnished for this purpose (see Figure 39). (Test gags for Consolidated® SRVs can be furnished for all types of caps and lifting gears.)

XV. Manual Popping of the Valve

Consolidated® SRVs are furnished, when so ordered, with packed or plain lifting levers for hand-popping or with an air-operated lifting device for remote control (see Figures 40 through 42).

When the valve is to be opened by hand, ensure the pressure at the valve inlet is at least 75% of the valve's set pressure. Under flowin conditions, the valve must be fully lifted from its seat so that dirt, sediment, and scale do not become trapped on the seating surfaces. When allowing the valve to close under flowin conditions, completely release the lever from maximum lift to snap the valve back on its seat.

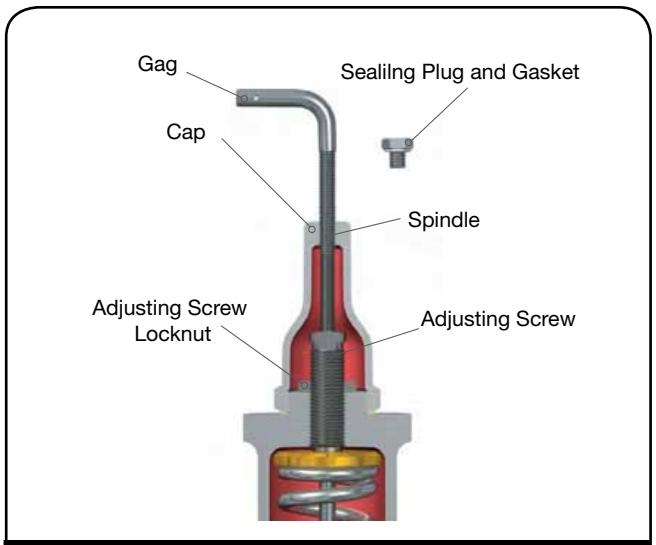

Figure 39: Hydrostatic Testing

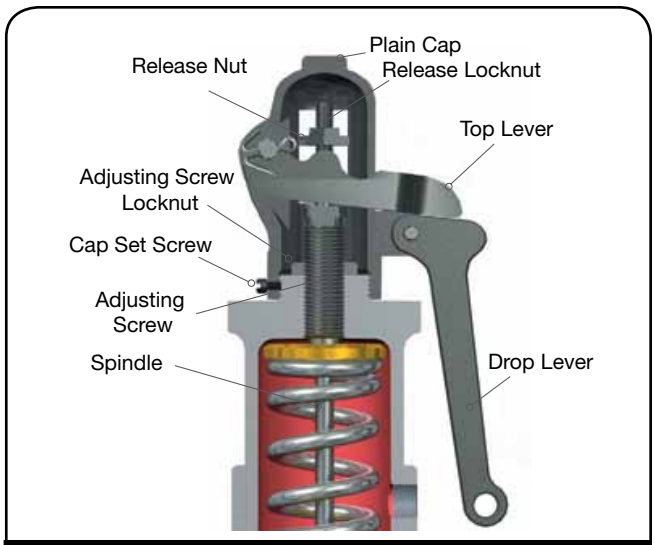

Figure 40: Plain Lever

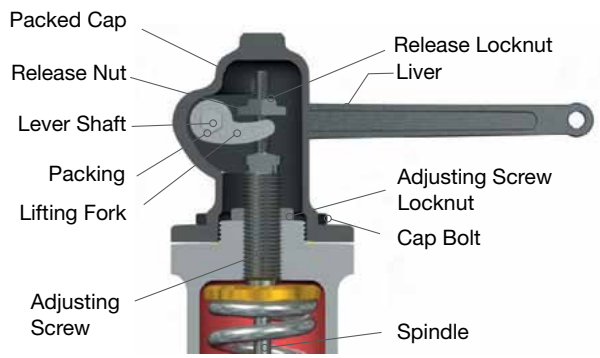

Figure 41: Packed Lever

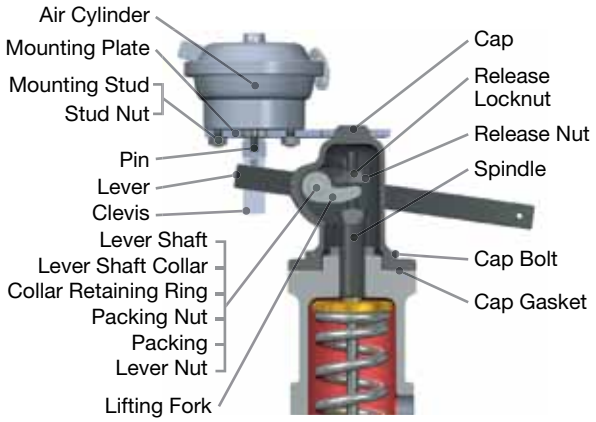

Figure 42: Air-Operated Packed Lever

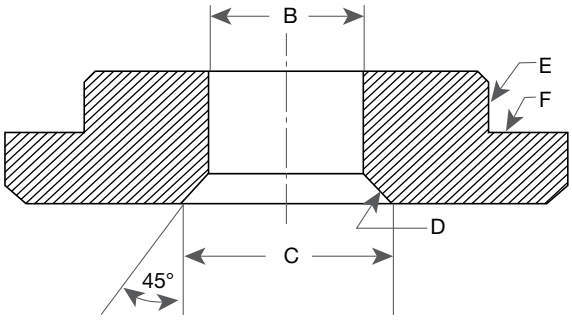

Figure 43: Lower Spring Washer

XV. Manual Popping of the Valve (Contd.)

Since the deadweight of a Packed Lever, and Air-Operated Packed Lever has a tendency to lift the valve, the lever should be supported or counterweighted so that the lifting fork does not contact the release nut (see Figures 41 and 42)

The air-operated lifting device is designed to fully open the valve with 75% of set pressure under the valve disc in compliance with ASME Section VIII. For certain applications, the air operator may be designed to fully open the valve with no pressure at the valve inlet. An air-operated device can be operated from a remote point and can be used as a “drop out” valve. (A typical design is shown in Figure 42, and can be purchased from Dresser, Inc.)

XVI. Conversion of 1900™ Series Flanged SRVs

General Information

Consolidated® Type 1900™ Flanged SRVs can be readily converted from conventional to bellows style, or vice versa, in the customer’s repair shops. However, the Type 1901 and 1902 valves were constructed in the conventional type only. Table 19 shows the parts necessary for the typical conversion.

Conversion from Conventional to Bellows Type

ATTENTION!

Remove the bonnet plug (41) from the bellows valves (see Figure 7) and vent the bonnet (11) to a safe area.

Convert from a conventional to a bellows type valve as follows:

1. Remove the eductor tube (40) from the base (1) by selecting a drill bit approximately .016” (0.40 mm) smaller in diameter than the outside diameter of the eductor tube. Drill into the bore of the eductor tube where the tubing is attached to the base. This will reduce the tube wall thickness to the extent that it can easily be collapsed for removal. The bellows fange will cover the hole in the guide surface which will remain after the tube is removed.
2. Machine the existing lower spring washer (17) (see Figure 43 and Table 20).

XVI. Conversion of 1900™ Series Flanged SRVs (Contd.)

Table 19: Conversion Parts: Conventional and Bellows Style Valves

Valve Orifice Size	New Parts to Convert From	
	Conventional to Bellows Valve	**Bellows to Conventional Valve**
D, E, F, G, H	1. Bellows assembly - Standard Material, 316L Stainless Steel. 2. Set of gaskets for bellows valve. 3. Guide for bellows valve. 4. Disc holder for bellows valve. 5. Spindle for bellows valve (F, G and H only). 6. Spindle retainer for bellows valve. 7. Base studs for bellows valve (D, E, F and G only). 8. Machine existing lower spring washer (F, G and H orifices only). Upper spring washer, no change. 9. Drill .719˝ (18.26 mm) dia. on bonnet boss and tap 1/2" N.P.T. (as required) (Note 1)	1. Eductor tube for conventional valve. (Not required for UM valves.) 2. Set of gaskets for conventional valve. 3. Guide for conventional valve. 4. Disc holder for conventional valve. 5. Spindle for conventional valve (F, G and H only). 6. Spindle retainer for conventional valve. 7. Base studs for conventional valve (D, E, F and G only). 8. New lower spring washer for conventional valve (F, G and H orifices only). Upper spring washer, no change. 9. Bonnet vent plugged (if desired).
K, L, M, Q, R, T, U Also J, N, P manufactured after 1981. (Note 2)	1. Bellows assembly - Standard Material, 316L Stainless Steel. 2. Set of gaskets for bellows valve. 3. Drill .719˝ (18.26 mm) dia. on bonnet boss and tap 1/2" N.P.T. (as required) (Note 1) 4. Studs (1905-30 K and L, 1906-30 K and L only).	1. Eductor tube for conventional valve. (Not required for UM valves.) 2. Set of gaskets for conventional valve. 3. Bonnet vent plugged (if desired). 4. Studs (1905 K and L, 1906 K and L only).
J, N, P Manufactured before 1982. (Note 2)	1. Bellows assembly - Standard Material, 316L Stainless Steel. 2. Set of gaskets for bellows valve. 3. Guide for bellows valve. 4. Disc holder for bellows valve. 5. Drill .719˝ (18.26 mm) dia. on bonnet boss and tap 1/2 N.P.T. (as required). (Note 1) 6. Studs (1905-30 N and P, 1906-30 N and P only).	1. Eductor tube for conventional valve. (Not required for UM valves.) 2. Set of gaskets for conventional valve. 3. Bonnet vent plugged (if desired). 4. Drill .438˝ (11.11 mm) dia. through guide flange 1.813 (46.04 mm) from guide borecenterline (J orifice only). 5. Studs (1905 N and P, 1906 N and P only).
V, W	1. Bellows assembly. 2. Set of gaskets for bellows valve. 3. Disc holder for bellows valve. 4. Guide for bellows valve. 5. Lift restricting ring. 6. Studs.	1. Set of gaskets for conventional valve. 2. Bonnet vent plug (if desired).

Note 1 Valves manufactured after 1980 are furnished with bonnet vent machined.

Note 2 J, N, P orifice valves manufactured after 1981 are furnished with threaded disc holder and reduced guide bore for balanced bellows conversion.

XVI . Conversion of 1900™ Series Flanged SRVs (Contd.)

Conversion from Bellows to Conventional Type

Convert from a bellows to a conventional type valve as follows:

1. Secure the eductor tube (40) in the base (1) by expanding or swaging into the hole provided. The upper end of the eductor tube should project above the guide surface of the base approximately .125˝ (3.18 mm) and the lower end should point directly and squarely toward the valve outlet. When the valve is assembled, the hole at the outer edge of the guide flange must fit loosely around the projection of the eductor tube.
2. For F, G and H orifice valves only, machine the new lower spring washer (17) (see Figure 44 and Table 21).

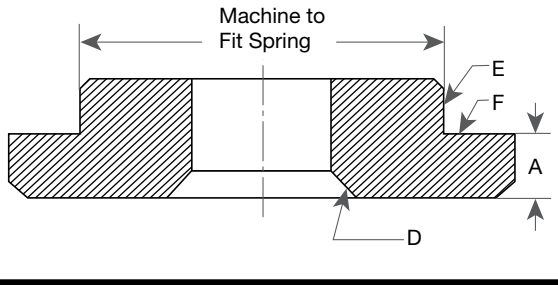

Figure 44: Lower Spring Washer F, G, and H Valves

ATTENTION!

For all 1900™ Series SRVs, dimension A may not be less than specified in Table 21.

Table 20: Machining Conventional to Bellows Type Lower Spring Washer

Valve Type		B		C	
		in.	mm	in.	mm
1905F	1906F	.688	17.46	1.000	25.40
1910F	1912F				
1920F	1922F				
1905G	1906G				
1910G	1912G				
1920G	1922G				
1914F	1916G	.875	22.23	1.250	31.75
1924F	1926F				
1914G	1916G				
1918G	1924G				
1926G	1928G				
1918F	1928F	1.000	25.40	1.438	36.53
1905H	1906H	.688	17.46	1.126	28.60
1910H					
1920H	1922H				
1912H	1924H	.875	22.2	1.313	33.34
1914H	1916H	1.000	25.40	1.500	38.10
1926H					

Note: When indicated at surfaces D and E (see Figure 41), run out at surface F is not to exceed .005˝ (.127 mm) full indicator reading.

Table 21: Machining Bellows Type to Conventional Lower Spring Washer

Valve Type			A	
			in.	mm
1905-30F	1906-30F	1910-30F	.250	6.35
1920-30F	1922-30F	1905-30G		
1906-30G	1910-30G	1920-30G		
1905-30H	1906-30H			
1912-30F	1922-30G		.313	7.94
1910-30H	1920-30H			
1922-30H				
1914-30F	1916-30F	1924-30F	.375	9.53
1926-30F	1914-30G	1916-30G		
1918-30G	1924-30G	1926-30G		
1928-30G	1912-30H	1924-30H		
1918-30F	1928-30F		.438	11.11
1914-30H	1916-30H	1926-30H	.500	12.70

Note: When indicated at surfaces D and E (see Figure 46), run out at surface F is not to exceed .005˝ (.13 mm) full indicator reading.

XVII. Troubleshooting 1900™ Series SRVs

Table 22: Troubleshooting Seat Leakage, Simmer, and Chatter		
Malfunction	**Cause**	**Solution**
Seat Leakage	Damaged seats.	Rework seats or replace part.
	Improper installation.	Inspect installation, i.e. piping.
	Operating pressure too close to set pressure.	Increase differential.
	Excessive system vibration.	Recheck application.
	Misalignment of valve components.	Ensure valve is installed vertically. Ensure valve has been properly assembled.
	Debris trapped on seats.	Pop valve to clean seats. Rework seats.
Simmer	Damaged seats.	Rework seats or replace part.
	Wide nozzle seat.	Rework seat.
	Improper adjusting ring setting.	Check ring setting.
	Misalignment/binding.	Inspect valve and installation.
Chatter	Improper installation or valve sizing.	Check for piping restrictions. Check required capacity.
	Built-up back pressure.	Check outlet piping.
	Improper ring setting.	Check ring setting.

XVIII. Maintenance Tools and Supplies

Table 23: Nozzle Bore Diameters

Orifice		Original Nozzle[1]			*New Nozzle (Std.& UM)			Nozzle Lap Handle[2]	Ring Lap[3]
		Nozzle Bore Diameter		Nozzle Lap Part No.	Nozzle Bore Diameter		Nozzle Lap Part No.		
Std.	UM.	in.	mm		in.	mm			
D-2	D	.393 - .398	9.98 - 10.11	543001	.404 - .409[4]	10.26 - 10.39[4]	4451501	544603	1672805
E-2	E	.524 - .529	13.31 - 13.44	543002	.539 - .544[5]	13.69 - 13.82[5]	4451502	544601	1672805
F	F	.650 - .655	16.51 - 16.64	543003	.674 - .679[6]	17.12 - 17.25[6]	4451503	544601	1672805
G	G	.835 - .840	21.21 - 21.34	543004	.863 - .868	21.92 - 22.05	4451504	544601	1672805
H	H	1.045 - 1.050	26.54 - 26.67	543005	1.078 - 1.083	27.38 - 27.51	4451505	544601	1672805
J	J	1.335 - 1.340	33.91 - 34.04	543006	1.380 - 1.385	35.05 - 35.18	4451506	544601	1672805
K	K	1.595 - 1.600	40.51 - 40.64	543007	1.650 - 1.655	41.91 - 42.04	4451507	544601	1672807
L	L	1.985 - 1.990	50.42 - 50.55	543101	2.055 - 2.060	52.20 - 52.32	4451601	544601	1672807
M	M	2.234 - 2.239	56.74 - 56.87	543102	2.309 - 2.314	58.65 - 58.78	4451602	544601	1672809
N	N	2.445 - 2.450	62.10 - 62.23	543103	2.535 - 2.540	64.39 - 64.52	4451603	544601	1672809
P	P	2.965 - 2.970	75.31 - 75.44	543104	3.073 - 3.078	78.05 - 78.18	4451604	544602	1672810
Q	Q	3.900 - 3.905	99.06 - 99.19	543105	4.045 - 4.050	102.74 - 102.87	4451605	544602	1672812
R	R	4.623 - 4.628	117.42 - 117.55	543106	4.867 - 4.872	123.62 - 123.75	4451606	544602	1672812
T-4	T	n/a	n/a	n/a	6.202 - 6.208	157.53 - 157.68	4451608	544602	1672814
U	U	n/a	n/a	n/a	6.685 - 6.691	169.80 - 169.95	None	None	1672814
V	V	n/a	n/a	n/a	8.000 - 8.005	203.20 - 203.33	None	None	6267201
W	W	n/a	n/a	n/a	10.029 - 10.034	254.74 - 254.86	None	None	4875201

Note 1 After August 1978, all 1900™ SRV Nozzles manufactured have increased bore diameter. The above chart shows how each orifice was affected. Nozzles - original vs. new - are interchangeable, but nozzle laps are not. On the outer diameter (O.D) of the new nozzles, the letter "C" is stamped. If this stamp becomes obliterated, the nozzle bore diameter must be measured to select the correct nozzle lap from above chart (see Table 23).

Note 2 Nozzle lap handles are interchangeable between original and new nozzle laps.

Note 3 Ring laps - One set of three (3) ring laps is recommended for each orifice to assure ample flat laps are available at all times.

Note 4 Use for all D-1 designs.

Note 5 Use for all E-1 designs.

Note 6 Also used for all D-2 and E-2 designs.

XVIII. Maintenance Tools and Supplies (Contd.)

Lapping Tools

The following tools are required for proper maintenance of Consolidated® Safety Relief seats, and may be purchased from Dresser, Inc.

Nozzle Lap - The nozzle lap is used for lapping the nozzle seat and has one flat side, and one side with a 5º angle. This lap guides in the bore of the nozzle; therefore, a different size lap is required for each valve orifice.

Ring Lap - The ring lap is used for lapping the disc seat and finish lapping the nozzle seat.

Lapping Plate - The lapping plate is used for reconditioning the ring lap. It may also be used for lapping the disc (6). One 11˝ (279.40 mm) diameter plate is required for the entire line of valves (Part No. 0439004).

Table 24: Lapping Compound Types

Brand	Grade	Grit	Lapping Function	Size Container	Part No.
Clover	1A	320	General	4 oz	199-3
Clover	3A	500	Finishing	4 oz	199-4
Kwik-Ak -Shun	----	1000	Polishing	1 lb 2 oz	199-11 199-12

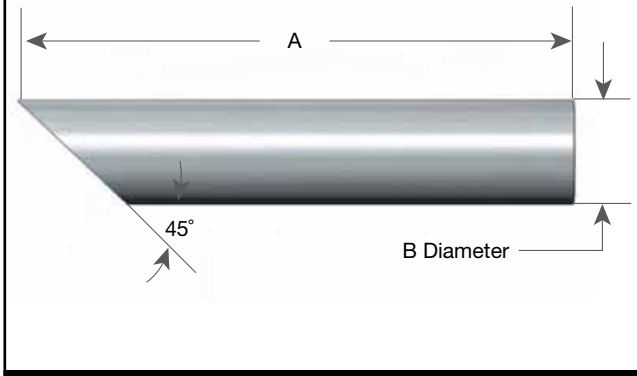

Figure 45: Drift Pins Specifcation

Table 25: Drift Pin Types

Orifice	A		B		Part No.
	in.	mm	in.	mm	
D,E,F,G,H,J,K	1.75	44.5	.22	5.6	0430401
L,M,N,P	2.50	63.5	.38	9.5	0430402
Q,R	3.00	76.2	.63	15.9	0430403
T,U	3.50	88.9	.88	22.2	0430404

Lapping Compound - Lapping compound is used as a cutting medium when lapping the valve seats (see Table 24).

Drift Pins - Two drift pins are required for the removal of the disc (6) from the disc holder (8) (see Figure 44 and Table 25).

Lifting Tools - Lifting tools are used for the removal of the upper internal parts of larger valves (see Table 25).

Spanner Wrench - Spanner wrench is used for the removal of the bellows from the disc holder (8) (see Table 26).

Table 25: Lifting Tool Types

Orifice	Part No.
M, N	4464602

Table 26: Spanner Wrench Types

Valve Orifice	Description of Wrench				Pin Spanner Wrench No.
	Radius		Pin Dia.		
	in.	mm	in.	mm	
D, E, F	.750	19.05	.219	5.56	4451801
G	.750	19.05	.219	5.56	4451801
H	.875	22.23	.234	5.94	4451802
J	1.125	28.58	.266	6.76	4451803
K	1.250	31.75	.281	7.14	4451804
L	1.375	34.93	.297	7.54	4451805
M	1.625	41.28	.328	8.33	4451806
N	1.875	47.63	.359	9.12	4451807
P	1.875	47.63	.359	9.12	4451807
Q	2.500	63.50	.438	11.13	4451808
R	3.000	76.20	.500	12.70	4451809
T	3.750	95.25	.500	12.70	4451810
U	3.750	95.25	.500	12.70	4451810

XIX. Replacement Parts Planning

Basic Guidelines

Use the following guidelines as reference for developing a replacement parts plan:

1. Classify the total number of valves in service by size, type, and temperature class.
2. Classify parts inventory by the tendency to require replacement.
   - Class I - Most frequently replaced
   - Class II - Less frequently replaced but critical in an emergency
3. Parts for the valve types covered by this manual are classified on Tables 28 and 29. “Qty. Parts” is the number of parts or sets recommended to achieve a desired need probability as it relates to the total number of valves in service by size and type. For example, a “Qty. Parts of 1” (25.4 mm) for “Valves in Service of 5” (127.00 mm) means that one part should be stocked for every five valves of the same type and size in service.
4. When ordering replacement parts, state the size, type, and serial number of the valve for which parts are required using correct nomenclature (see Figures 1 through 10).
5. Predicted availability indicates the percentage chance the user plant will have the right parts to make a proper repair (i.e., if Class I parts are stocked at the owner’s facility, the parts needed to repair the valve in question will be immediately available in 70% of all instances).

Replacement Parts List

Consult the Recommended Spare Parts list (see Tables 27 and 28) to define the parts to be included in the inventory plan. Select the desired parts and determine those required for proper maintenance of the valve population in the plant.

Identification and Ordering Essentials

When ordering service parts, furnish the following information to ensure receipt of the correct replacement parts:

1. Identify valve by the following nameplate data:
   - Size
   - Type
   - Temperature Class
   - Serial Number
     - ☐ Example 1: 1.5″ (38.10 mm) 1910Fc
       S/N TD-94578
2. Specify parts required by:
   - Part Name (see Figures 1 through 10)
   - Part Number (if known)
   - Quantity

In addition, the serial number is stamped on the top edge of the outlet flange. Include the one or two letters preceding the figures in the serial number (see Figures 46 through 49).

Contact Parts Marketing: (318) 640-6044.

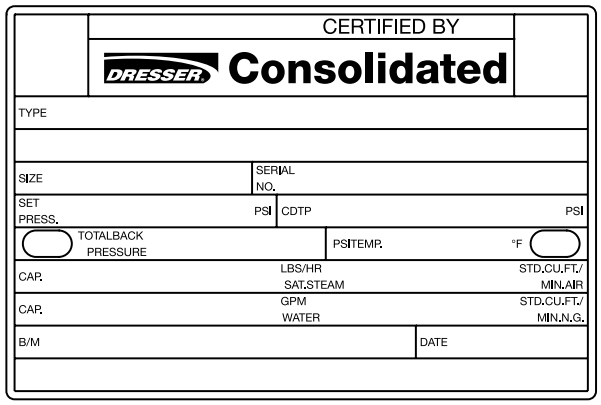

Figure 46: Typical Valve Nameplate

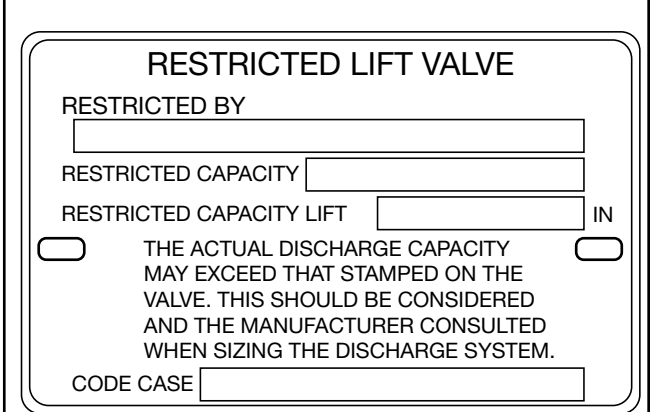

Figure 47: Typical Valve Nameplate

XIX. Replacement Parts Planning (Contd.)

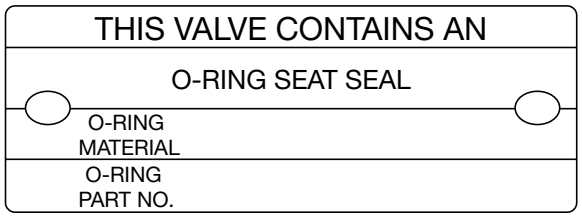

Figure 48: Typical Valve Nameplate

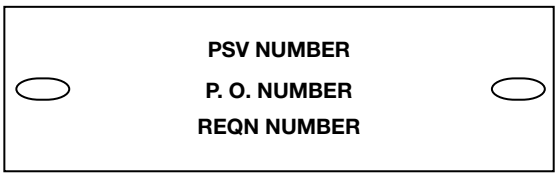

Figure 49: Optional Tag Number Nameplate

When the SRV is repaired, a metal repair nameplate (see Figure 50), Board "VR" symbol and stamp number, and the date of repair is permanently attached to the valve near the original nameplate. This repair nameplate may also contain information regarding altered set pressures, capacities, or blowdown, as applicable.

ATTENTION!

To determine if the valve contains Glide-Aloy™ components (i.e., the disc holder (8) and/or the guide (9)), which are identified by the coding found on the valve nameplate, see Optional Glide-Aloy™ Parts.

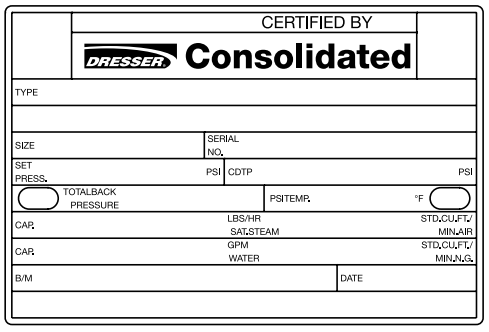

Figure 50: Repair Nameplate

XX. Genuine Dresser Parts

Each time replacement parts are needed, keep these points in mind:

- Dresser, Inc. designed the parts.
- Dresser, Inc. guarantees the parts.
- Consolidated® valve products have been in service since 1879.
- Dresser, Inc. has worldwide service.
- Dresser, Inc. has fast response availability for parts.

XXI. Recommended Spare Parts for 1900™ Series SRVs

Table 27: 1900™ Conventional and 1900™-30 Bellows
1900™ Conventional and 1900™-30 Bellows with Liquid Trim (LS)
1900™ Conventional and 1900™-30 Bellows with Thermodisc® (TD)
1900 Universal Media (UM) and 1900 UM -30 Bellows

Class	Part Name	C-conventional B-bellows	Qty. Parts / Same Valves in Service	Need Probability Coverage
I.	Disc (TD)	C and B	1/1	
	Disc (Std. & UM)	C and B	1/3	
	Nozzle (Std. & UM)	C and B	1/10	
	Limit Washer[1] (Std. & UM)	C and B	1/1	
	Bellows (Std. & UM)	B	1/3	
	Adj. Ring Pin (Std. & UM)	C and B	1/3	
Stocking Class I parts at the Qty. Parts column rate provides sufficient replacements for 70% of maintenance requirements	Disc and Spindle Retainers (Std. & UM)	C and B	1 Set/1	70%
	Gasket (Set)			
	(1) Cap Gasket (Std. & UM)	C and B	1/1	
	(1) Bonnet Gasket (Std. & UM)	C and B	1/1	
	(1) Guide Gasket (Std. & UM)	C and B	1/1	
	(1) Adj. Ring Pin Gasket (Std. & UM)	C and B	1/1	
	(1) Bellows Gasket (Std. & UM)	B	1/1	
II.	Disc Holder (Std. & UM)	C and B	1/6	
	Spindle (Std. & UM)	C and B	1/6	
Stocking Class II parts, in addition to Class I, at the Qty. Parts column rate provides sufficient replacments for 85% of maintenance requirements	Guide (Std. & UM)	C and B	1/6	85%
	Studs, Base (Std. & UM)	C and B	1 Set/6	
	Nuts, Base Stud (Std. & UM)	C and B	1 Set/6	

Note 1 For restricted lift valves only.

YOUR SAFETY IS OUR BUSINESS!!!

Dresser, Inc. has not authorized any company or any individual to manufacture replacement parts for its valve products. When ordering replacement valve parts, please specify in your purchase order: “ALL PARTS MUST BE DOCUMENTED AS NEW AND SOURCED FROM DRESSER, INC.”

XXI. Recommended Spare Parts for 1900™ Series SRVs

Table 28: 1900™ Conventional and 1900™-30 Bellows with O-Ring Seat Seal Design (DA)
1900™ Conventional and 1900™-30 Bellows with O-Ring Seat Seal Design and Liquid Trim (DL)
1900 Universal Media (UM) and 1900 UM -30 Bellows with Soft-Seat Design (UM DA)

Class	Part Name	C-conventional B-bellows	Qty. Parts / Same Valves in Service	Need Probability Coverage
I. Stocking Class I parts at the Qty. Parts column rate provides sufficient replacements for 70% of maintenance requirements.	O-Ring (Std.)	C and B	1/1	70%
	Teflon Seal (UM DA)	C and B	1/1	
	Disc (Std.: K-U only & UM DA)	C and B	1/10	
	O-Ring Retainer (Std.)	C and B	1/5	
	Soft-Seat Retainer (UM DA)	C and B	1/5	
	Retainer Lock Screw (Std. & UM)	C and B	1 Set/1	
	Limit Washer[1] (Std. & UM)	C and B	1/1	
	Nozzle (Std. & UM)	C and B	1/5	
	Adj. Ring Pin (Std. & UM)	C and B	1/1	
	Gasket (Set)		1 Set/1	
	(1) Cap Gasket (Std. & UM)	C and B	1/1	
	(1) Bonnet Gasket (Std. & UM)	C and B	1/1	
	(1) Guide Gasket (Std. & UM)	C and B	1/1	
	(1) Adj. Ring Pin Gasket (Std. & UM)	C and B	1/1	
	(1) Bellows Gasket (Std. & UM)	B	1/1	
	Bellows (Std. & UM)	B	1/3	
	Disc Retainer (Std.: K-U only & UM)	C and B	1/1	
	Spindle Retainer (Std. & UM)	C and B	1/1	
II. Stocking Class II parts, in addition to Class I, at the Qty. Parts column rate provides sufficient replacements for 85% of maintenance requirements.	Disc Holder (Std. & UM)	C and B	1/6	85%
	Spindle (Std. & UM)	C and B	1/6	
	Guide (Std. & UM)	C and B	1/6	
	Studs, Base (Std. & UM)	C and B	1 Set/6	
	Nuts, Base Stud (Std. & UM)	C and B	1 Set/6	

Note 1 For restricted lift valves only.

YOUR SAFETY IS OUR BUSINESS!!!

Dresser, Inc. has not authorized any company or any individual to manufacture replacement parts for its valve products. When ordering replacement valve parts, please specify in your purchase order: “ALL PARTS MUST BE DOCUMENTED AS NEW AND SOURCED FROM DRESSER, INC.”

XXI. Manufacturer's Warranty, Field Service, Training, and Repair Program

Warranty Information

*WARRANTY STATEMENT - Dresser, Inc. warrants that its products and work will meet all applicable specifications and other specific product and work requirements (including those of performance), if any, and will be free from defects in material and workmanship.

Defective and nonconforming items must be held for Dresser's inspection and returned to the manufacturer upon request.

INCORRECT SELECTION OR MISAPPLICATION OF PRODUCTS - Dresser, Inc. cannot be responsible for customers' incorrect selection or misapplication of our products.

UNAUTHORIZED REPAIR WORK - Dresser, Inc. has not authorized any non-Dresser-affiliated repair companies, contractors or individuals to perform warranty repair service on new products or fieldrepaired products of its manufacture. Therefore, customers contracting such repair services from unauthorized sources do so at their own risk.

* Refer to Dresser's Standard Terms of Sale for complete details on warranty and limitation of remedy and liability.

Field Service

Dresser Consolidated provides safe, reliable valve services through our Green Tag® certified valve assemblers and repair centers. The first valve repair network of its kind and today's industry leader, our authorized Green Tag Centers have successfully served the valve market for over 25 years. Our services include:

Valve Survey

- Comprehensive, accurate record of all PRVs
- Identification of overlooked valves and valve interchangeability
- Product upgrades to reduce cost and improve performance

Inspection of the Valve & Installation

- Visual evaluation of the installation for compliance to codes and regulations
- Written evaluation covering compliance issues and discrepancies
- Expert recommendations and corrective actions

Testing

- On-site and in-place testing using the Dresser Consolidated® EVT™ testing device
- High-capacity shop testing with steam, air or water
- Fully trained and certified pressure relief valve technicians
- Base line history established

Repair

- Audited facility with Dresser Consolidated® inspection criteria and critical dimensions
- Fully trained and certified pressure relief valve technicians
- Original manufacturer replacement parts

Inventory Control

- Global access to spare parts inventories
- Parts interchangeability
- Obsolete and excess inventory identification
- Recommend cost effective inventories

ValvKeep™

- Comprehensive computer-based valve management service
- Historical data storage and permanent record tracking
- Maintenance scheduling and planning
- Repair intervals validated by maintenance history of each valve
- Code Compliance
- Interfaces easily with enterprise or legacy systems

XXIII. Manufacturer's Warranty, Field Service, Training, and Repair Program (Contd.)

Factory Repair Facilities

Our factories maintain a complete Consolidated® repair center. The Repair Department, in conjunction with the manufacturing facilities, is equipped to perform specialized repairs and product modifications, e.g., butt-welding, bushing replacements, code welding, and pilot replacement.

Contact: Valve Repair Department at (318) 640-6057.

SRV Maintenance Training

The rising costs of maintenance and repair in the utility and process industries indicate the need for trained maintenance personnel. Dresser, Inc. conducts service seminars that help your maintenance and engineering personnel reduce these costs.

Seminars, conducted either at your site or ours, provide participants with an introduction to the basics of preventative maintenance necessary to minimize downtime, reduce unplanned repairs, and increase valve safety. While these seminars do not create "instant experts," they do provide the participants with hands-on experience with Consolidated® valves. The seminar also includes valve terminology and nomenclature, component inspection, troubleshooting, setting, and testing with emphasis on the ASME Boiler and Pressure Vessel Code.

For further information, contact the Product Training Manager by fax at (318) 640-6325 or telephone at (318) 640-6054.

XXIV. Self-Study Edition of the 1900™ Series SRV Maintenance Training Program is Available for Valve Shop Personnel

The Self-Study Program consists of a video tape that is integrated with a participant workbook. A participant begins with an introduction to the product and progresses through the various stages of disassembly, cleaning, maintenance repair, reassembly, setting, testing, installation, and conversions. The program can also be used as an instructor-led course. The training package includes:

- Five Participant Training Manuals
- Five Consolidated® 1900™ and 1900™-30

SRV Installation, Operation, and Maintenance

Manuals

- Integral 1900™ Series SRV video tape
- Coaches' Guide to facilitate learning

Program kits, as well as additional training and maintenance manuals, are available through:

Dresser, Inc.
Consolidated® Product Training Manager
P.O. Box 1430
Alexandria, LA 71309-1430
Telephone: (318) 640-6054
Fax: (318) 640-6325

XXV. Optional Glide-Aloy™ Parts

Optional Glide-Aloy™ Parts and the Repair Processing of Such Components

Glide-Aloy™ is a proprietary process of Dresser, Inc. utilized to provide a combination of a low coefficient of friction between sliding components and to protect the surfaces of the components to which the process has been applied. A Glide- Aloy™ surface-hardened valve component may be recognized by its flat, dull gray color and slick surface. The parent metal should not be visible on a new component.

ATTENTION!

Do not attempt to remove the coating of a Glide-Aloy™ treated component.

The Glide-Aloy™ reaction bonding process is commonly applied to Consolidated® 1900™ Series SRV disc holders and/or guides, when specified. Although the entire surface area of the component is treated, only the guiding surface is critical. When Consolidated® 1900™ Series SRVs contain Glide- Aloy™ parts, they may be identified by the coding found on the valve nameplate.

Example: 1905Jc-2-G1 where the “G” designation indicates Glide-Aloy™:

G1 - Glide-Aloy™ Holder

G2 - Glide-Aloy™ Guide

G3 - Glide-Aloy™ Holder and Guide

Glide-Aloy™ treated components may be cleaned by low-pressure compressed air, microbead blasting, or brushing. Also, a non-chlorinated, hydrocarbon shop solvent may be used. The latter is for personnel safety reasons and not because of any incompatibility between chlorides and Glide - Aloy™.

Regarding personnel safety, all personnel should be familiar with the appropriate processes as well as the material safety data sheets (MSDS) supplied by the vendor of any cleaning compounds used. Personal protective equipment (protective gloves, goggles, etc.) should be worn so as to avoid contact with materials that may be splashed during the cleaning process.

For a component in service after the cleaning process is completed, visually inspect parts to ensure all debris is removed, and that the components have the required finish.

Dresser, Inc.’s experience indicates that if the components have been properly cleaned, adequate coating will remain to ensure proper operation. The coating may appear lighter or missing in some areas, but the desired results will be achieved as a result of the coating characteristics imparted to the parent metal during the original coating process.

ATTENTION!

Do not machine the guiding surfaces that have been Glide-Aloy™ treated.

Components that are deeply gouged or galled, and that do not meet dimensional requirements, cannot be cleaned and returned to service. Machining removes the coating and renders the parts unacceptable. The surface-hardness approximates that of diamonds, and is approximately .002˝ (0.051 mm) thick.

ATTENTION!

Follow recommendations for safe handling of solvents as specified in the MSDS and observe safe practices for any cleaning method.

XXVI. Sales Office Locations

UNITED STATES

Dresser Consolidated®
Dresser, Inc.
LA Hwy. 3225 @ US Hwy. 167N
P.O. Box 1430
Alexandria, LA 71309-1430
Telephone: + (1) 318 640 2250
Fax: + (1) 318 640 6325

Dresser Consolidated® Headquarters
10343 Sam Houston Park Drive
Suite 210
Houston, TX 77064
Telephone: +(1) 281 671 1640
Fax: +(1) 281 671 1735

Dresser Direct
1250 Hall Court
Deer Park, TX 77536
Telephone: + (1) 281 884 1000
Fax: + (1) 281 884 1010

Dresser Direct
905A Industrial Road
Clute, TX 77531
Telephone: + (1) 979 265 1309
Fax: + (1) 979 265 2514

Dresser Direct
4841 Leopard Street
Corpus Christi, TX 78408
Telephone: + (1) 361 881 8182
Fax: + (1) 361 881 8246

BRAZIL

Dresser Industria E Comercio Ltda
Rod. Presidente Dutra, KM 154, 7
Predio 18 - Pq Industrial CEP 12240-420
San Jose dos Campos, Sau Paulo, Brazil
Telephone: + (55) 11 2146 3600
Fax: + (55) 11 2146 3610

CHINA

Dresser Machinery (Suzhou) Co., Ltd.
81, Suhong Zhong Road
Suzhou Industrial Park
Suzhou, P.R. China 215021
Telephone: + (86) 512 6258 6500
Fax: + (86) 512 6258 8590

Dresser, Inc.
Suite 1703, Capital Mansion
6 Xinyuan S. Road, Chaoyang District
Beijing 100004 P.R. China
Telephone: + (86) 10 8486 4515
Fax: + (86) 10 8486 5305

FRANCE

Dresser Flow Technology Europe
Energy 5 - 130/190 Bd de Verdun
92413 Courbevoie Cedex, France
Tel: + (33) 1 49 04 90 00
Fax: + (33) 1 49 04 90 10

GERMANY

Dresser Valves Europe GmbH
Heiligenstrasse 75
41751 Viersen, Germany
Tel: + (49) 2162 8170 0
Fax: + (49) 2162 8170 280

INDIA

Dresser Valve India Pvt. Ltd.
305/306, “Midas”, Sahar Plaza
Mathuradas Vasanji Road
J B Nagar, Andheri East, Mumbai, India 400 059
Telephone: + (91) 22 2 835 4790 / 838 1134
Fax: + (91) 22 2 835 4791

ITALY

Dresser Italia S.r.l.
Via Cassano 77
80020 Casavatore (Naples), Italy
Telephone: + (39) 081 7892 111
Fax: + (39) 081 7892 308

JAPAN

Dresser Japan,Ltd. (DJL)
20th Floor Marive East Tower
WBG 2-6 Nakase
Mihama-ku Chiba-shi
Chiba 261-7120 Japan
Telephone: + (81) 43 297 9211
Fax: + (81) 43 299 1115

KOREA

Dresser Korea, Inc.
Hyundai Swiss Tower, 17 Floor
143-40, Samsun-don Kangham-ku
Seoul 135-090, Korea
Telephone: + (82) 2 2274 0748
Fax: + (82) 2 2274 0720

XXVI. Sales Office Locations

MALAYSIA

Dresser, Inc.
Asia Pacific Headquarters
Business Suite 19A-9-1, Level 9
UOA Centre, No. 19 Jalan Pinang
50450 Kuala Lumpur, West Malaysia
Telephone: + (60) 3 2161 0322
Fax: + (60) 3 2163 6312

MEXICO

Dresser De Mexico S.A. de C.V.
Henry Ford #114 Esq. Fulton
Fraccionamiento Industrial San Nicolas
C.P. 54030 Tlalnepantla, Estado de Mexico
Telephone: + (52) 55 5310 9863
Fax: + (52) 55 5310 4279

THE NETHERLANDS

Dresser Valves Europe GmbH
Steenhouwerstraat 11
NL-3194 AG Hoogvliet, The Netherlands
Telephone: + (31) 10 866 6538
Fax: + (31) 79 361 8995

RUSSIA

Dresser Europe
Derbenevskaya Ulitsa 1, Bldg. 3, Office 17
Moscow, Russian Federation 115 114
Telephone: + (7) 4955 851276
Fax: + (7) 4955 851279

SAUDI ARABIA

Dresser Al Rushaid Valve & Inst. Co. Ltd.
(DARVICO)
P. O. Box 10145
Jubail Industrial City 31961
Kingdom of Saudi Arabia
Telephone: + (966) 3 341 0278
Fax: + (966) 3 341 7624

SINGAPORE

Dresser Singapore, Pte. Ltd.
Dresser Flow Solutions
16 Tuas Avenue 8
Singapore 639231
Telephone: + (65) 6861 6100
Fax: + (65) 6861 7197

SOUTH AFRICA

Dresser International, Ltd., South Africa Branch
Dresser Flow Solutions
P. O. Box 2234, 16 Edendale Road
Eastleigh, Edenvale 1610
Republic of South Africa
Telephone: + (27) 11 452 1550
Fax: + (27) 11 452 2903

SPAIN

Dresser Italia S.r.l.
Via Cassano 77
80020 Casavatore (Naples), Italy
Telephone: + (39) 081 7892 111
Fax: + (39) 081 7892 308

SWITZERLAND

Dresser Valves Europe GmbH
Windenboden 23
CH-6345 Neuheim, Switzerland
Telephone: + (41) 41 755 27 03
Fax: + (41) 41 755 28 13

UNITED ARAB EMIRATES

Dresser International, Inc. - Middle East Operations
P. O. Box 61302
R/A 8, Blue Sheds JA01 & JA02,
Jebel Ali Free Zone
Dubai, United Arab Emirates
Telephone: + (971) 4 8838752
Fax: + (971) 4 8838038

UNITED KINGDOM

Dresser U.K. Limited
Dresser House
East Gillibrands
Skelmersdale, Lancashire
England WN8 9TU United Kingdom
Telephone: + (44) 1695 52600
Fax: + (44) 1695 52601

FOR YOUR GREEN TAG CENTER IN USA/CANADA
CALL 1-800-245-VALV

or contact the locations listed above for international service.

Dresser® and Consolidated® are registered trademarks of Dresser, Inc.
Copyright 2007, Dresser, Inc.

About Dresser Consolidated

Dresser Consolidated, headquartered in Houston, Texas, has been an international leader in dependable pressure relief valves and solutions for more than 100 years. A business segment of Dresser, Inc., the company delivers the trusted expertise to provide and service reliable flow safety systems in critical applications around the world. www.dresser.com

About Dresser, Inc.

Dresser, Inc. is a leader in providing highly engineered infrastructure products for the global energy industry. The company has leading positions in a broad portfolio of products, including valves, actuators, meters, switches, regulators, piping products, natural gas-fueled engines, retail fuel dispensers and associated retail point-of-sale systems, and air and gas handling equipment. Leading brand names within the Dresser portfolio include Dresser Wayne® retail fueling systems, Waukesha® natural gas-fired engines, Masoneilan® control valves, Consolidated® pressure relief valves, and Roots® blowers. It has manufacturing and customer service facilities located strategically worldwide and a sales presence in more than 100 countries.

DRESSER Consolidated

www.consolidatedvalve.com

© 2009 *Dresser, Inc. All rights reserved.*

MM_1900

Canalta

Flow Measurement

A Canalta Controls Company

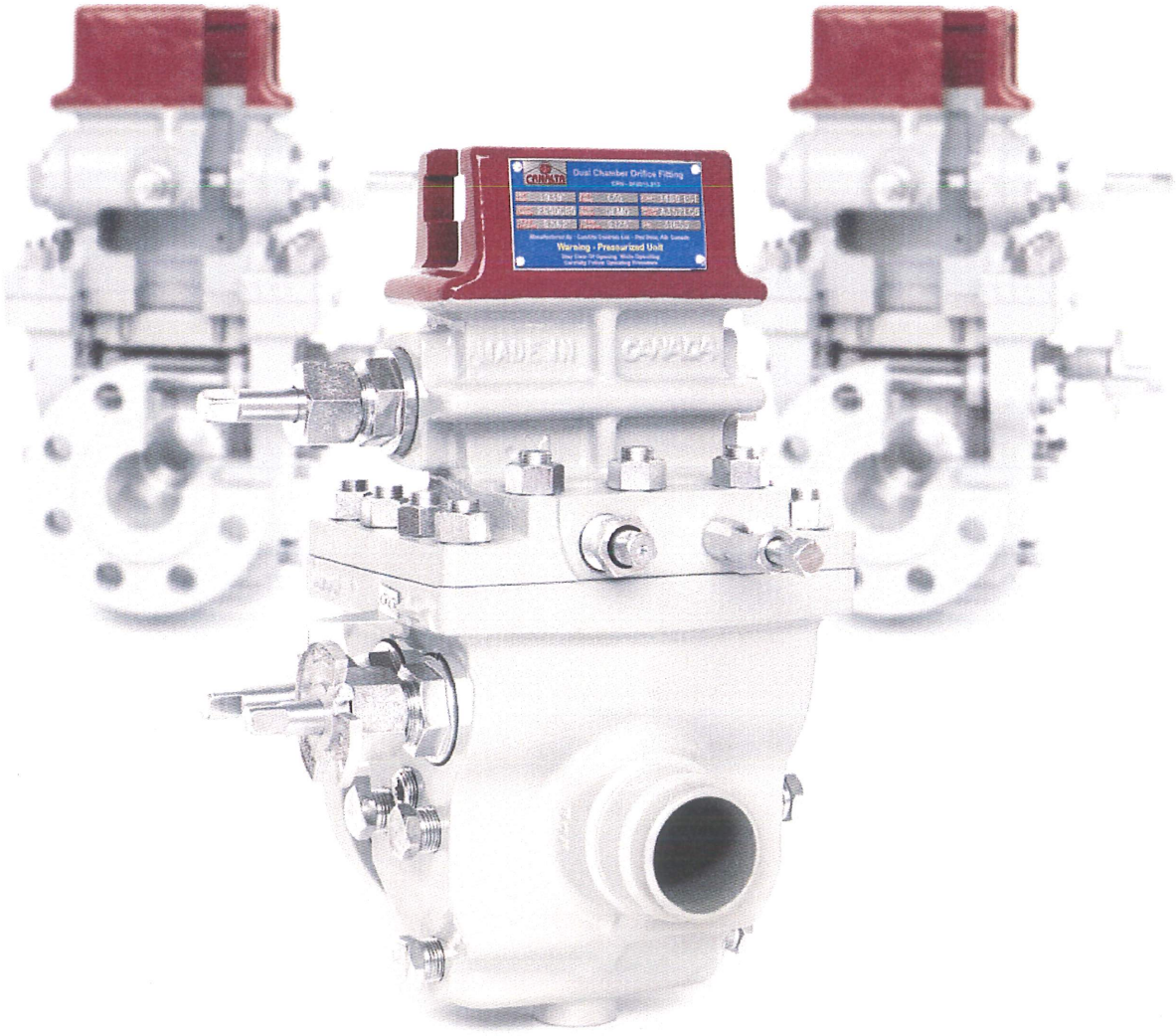

The Canalta Dual Chamber Orifice Fitting

Exceptional Value **means adding to your** ***Bottom Line***
without sacrificing ***Quality, Service*** **or** ***Performance***

Call Us Toll Free: 1-855-CANALTA
An ISO 9001:2008 registered company

Phone: 403.342.4494
Email: sales@canaltaflow.com
www.canaltaflow.com

The ***Canalta Dual Chamber Orifice Fitting*** is a high quality, high accuracy orifice fitting manufactured in a wide selection of sizes and materials. Proven measurement principles and field repairability make the Dual Chamber Orifice Fitting a reliable, cost-effective solution to your flow measurement needs. These units are built to meet or exceed ASME and ANSI specifications, as well as to comply with the requirements of the latest editions of AGA-3 / API-14.3 and ISO-5167. Available in Flangeneck, Flange x Flange and Weldneck configurations.

No matter the application, your process will benefit from Canalta's proven reliability and you can improve your bottom line without sacrificing quality, service or performance.

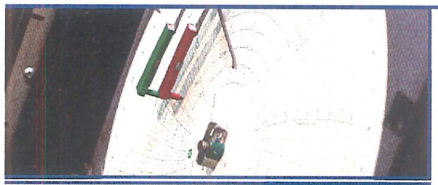

Our comprehensive ***Quality Management System*** includes full function, hydrostatic and pneumatic pressure testing to prevent imperfect fittings from reaching service. Standard testing comes at no extra charge and includes verifiable pressurization to 150% of working pressure. Additional inspections - such as radiography, ultra sonic and liquid dye penetration - are also available.



Our unit-specific ***Documentation*** packages include hydrostatic, seal and function test results as well as material test reports. An AGA 2000 Inspection Report is submitted with every fitting and includes bore tolerance and roughness tests, orifice eccentricity, seal protrusion, plate sealing tests and other critical details.

Third party inspection and reporting is available upon request.

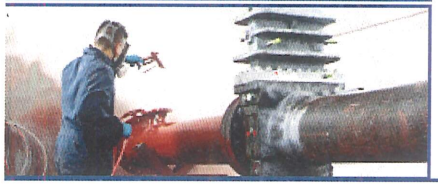

Canalta applies a standard coating to all Dual Chamber Orifice Fittings that includes a non-lift oxide primer and fast-drying enamel finish in Canalta Grey and burgundy top. Custom coatings for special environments - including maritime, humid, high temperature and others - custom colours and primer only applications are also available.

Parts matter, whatever your service environment.

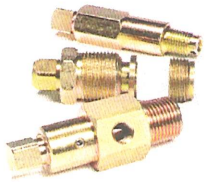



Our standard zinc-plated 4130 carbon steel internals offer superior corrosion protection and resistance to sulfide or hydrogen induced cracking, providing reliability and performance over a long service life.

For extreme corrosive applications, such as wet H_2S service, 316 stainless steel internals are available to protect against general and localized corrosion.

All parts conform to NACE MR0175 / ISO 15156:2003 specifications. Internals in Duplex SS and other exotic alloys are also available by special order.

Delivering superior orifice fittings and exceptional value has been our core business for over fifteen years.

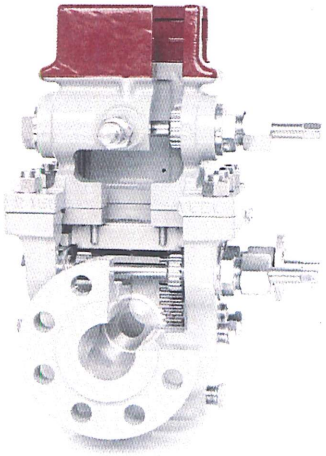

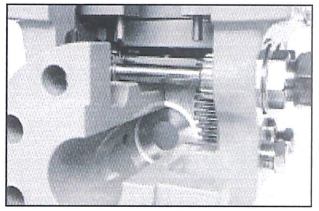

With orifice plate in flow line

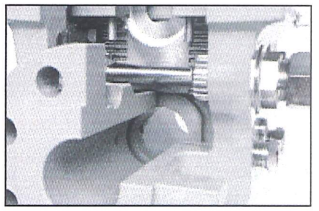

With orifice plate out of flow line

Each unit features ***Fully Accessible, Field Adjustable Eccentricity*** of the orifice plate from the exterior of the fitting. Tamper-proof sealing is done on request.

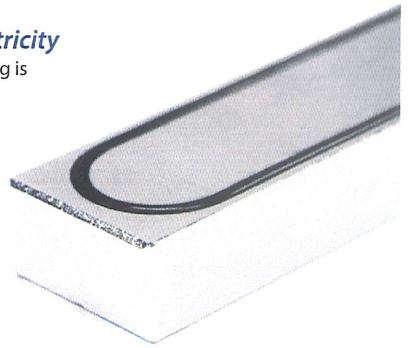

HNBR O-ring Seals on both the body and seal bar come standard with all Canalta Dual Chamber Orifice Fittings. This feature eliminates nuisance gasket maintenance and clamping bar screw breakage, while providing superior sealing capability. The O-rings incorporated are standard shelf sizes and can be supplied in a wide variety of compositions. Gaskets are also available and can be used when preferred or required.

The ***Soft Seat Valve Seal*** is available for all dual chamber models. Effective in all scenarios, but particularly suited to low pressure applications, this unique design enables a bubble-tight seal between the upper and lower chambers without the need for frequent lubrication. The specially machined seal channel helps prevent O-ring dislocation, and the O-ring seals incorporated are available in a wide variety of compositions.

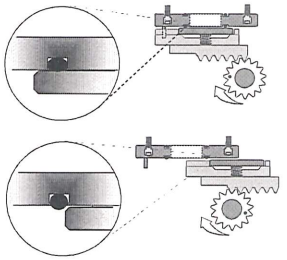

METER RUNS

All Canalta Dual Chamber Orifice Fittings can be supplied with complete custom-designed ***Meter Runs*** and ***Flow Conditioning Solutions*** that meet your exact specification or performance needs.

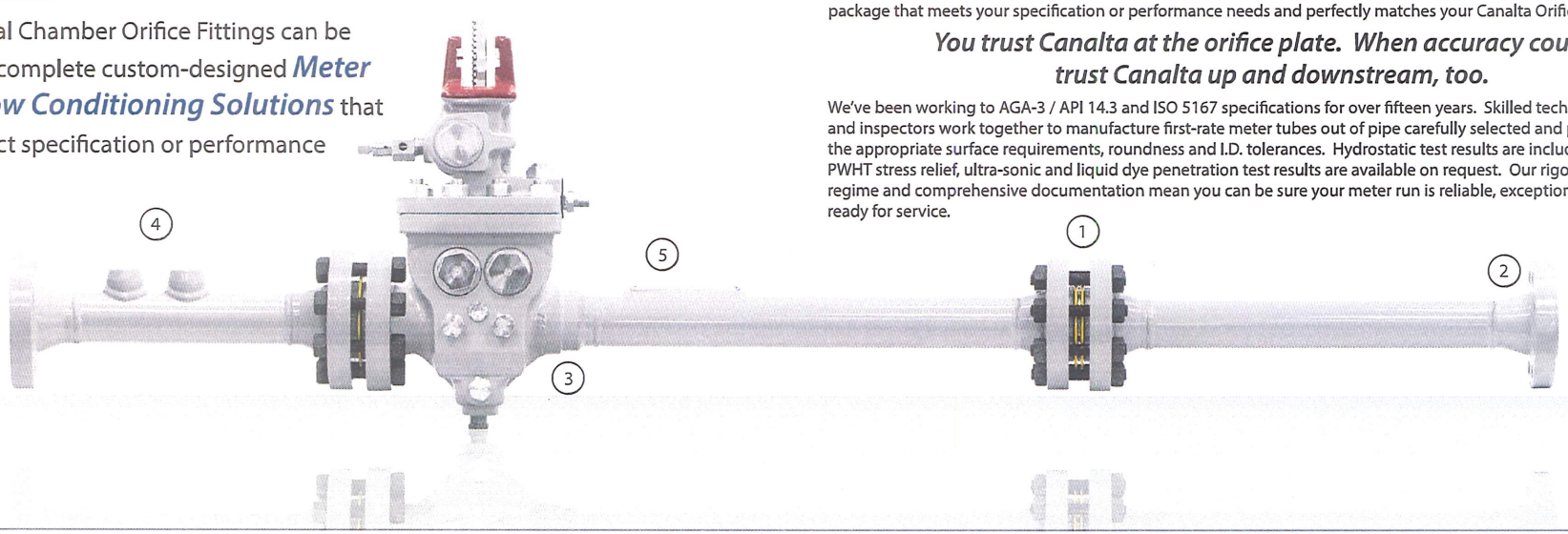

Whether the size is 2" or 30", high or low pressure, wet, dry or corrosive service, we can put together a custom meter run package that meets your specification or performance needs and perfectly matches your Canalta Orifice Fitting.

You trust Canalta at the orifice plate. When accuracy counts, trust Canalta up and downstream, too.

We've been working to AGA-3 / API 14.3 and ISO 5167 specifications for over fifteen years. Skilled technicians, engineers and inspectors work together to manufacture first-rate meter tubes out of pipe carefully selected and prepared with the appropriate surface requirements, roundness and I.D. tolerances. Hydrostatic test results are included as a standard. PWHT stress relief, ultra-sonic and liquid dye penetration test results are available on request. Our rigorous inspection regime and comprehensive documentation mean you can be sure your meter run is reliable, exceptionally accurate and ready for service.

1 FLOW CONDITIONING ACCESSORIES

The goal of meter run design is to account for swirl and turbulence. Suitable for a wide range of flow measurement methods and equipment, Canalta's Contour™ lineup of Flow Conditioners, Flow Conditioner Housings and Straightening Vanes will help you develop the flow profile you need to achieve maximum performance and accuracy in the field.

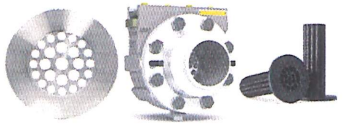

2 END CONNECTION OPTIONS

Canalta Meter Runs can be fabricated with a variety of standard tube ends. All inner surface welds are precision ground and inspected to meet exacting I.D. surface and roundness tolerances. Per your requirements, two and three-piece meter runs can have dissimilar end types up and downstream of the orifice fitting.

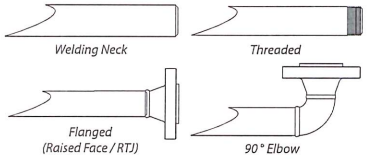

3 WELDING SPECIFICATION

Each Canalta Meter Run is professionally fabricated by our team of certified "B" Pressure Welders and experienced pipe finishers to meet and exceed the stringent specifications of AGA / API / ISO. Our welding procedures are registered with the Alberta Boiler and Safety Association (ABSA) and are in accordance with the applicable ASME Boiler and Pressure Vessel Codes. Canalta will ensure that all of your NDT and stress relieving requirements are met with full documentation.

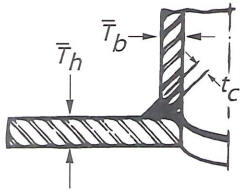

4 BRANCH CONNECTION OPTIONS

Industry standard offerings provide one 1" and one 3/4" branch connection on the downstream spool. Our custom meter tube design capability allows us to fabricate nearly any combination of weldolets, sockolets, flanged outlets, threadolets and latrolets in any orientation.

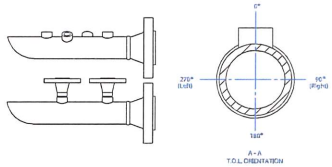

5 METER RUN SPECIFICATION PLATE

All Canalta Meter Runs include a specification plate mounted immediately upstream of the orifice fitting. These spec plates detail pipe schedule, pressure rating, maximum beta, maximum orifice and other information essential to proper operation.



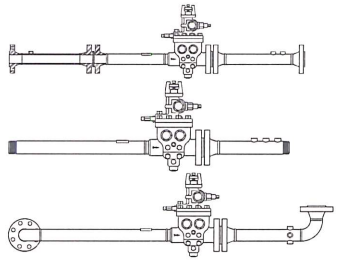

With literally endless configurations possible, Canalta will custom design and fabricate your meter run for any application.

ACCURACY, RELIABILITY, PERFORMANCE.

PARTS & REPAIR KITS

Canalta supplies ***OEM Parts and Accessories*** for all of our Dual Chamber Orifice Fitting models. These are high quality carbon and stainless steel internals that offer superior corrosion protection and resistance to sulfide or hydrogen induced cracking, providing reliability and performance over a long service life.

All materials meet the applicable ASTM requirements and are traceable to the original foundry. Wherever possible, Canalta has endeavoured to ensure that our parts and accessories are interchangeable with the current industry standard orifice fitting brand, making Canalta Orifice Fitting Parts and Accessories suitable for re-builds and re-works of our competitors' product lines.

Close attention to detail and tight quality control auditing ensure that Canalta parts are reliable and ready for service in the field.



Canalta also offers complete ***Orifice Fitting Repair Kits***, which include a full complement of parts, allowing for a complete rebuild of the orifice fitting or replenishment of spare parts inventory. These kits are available with carbon or stainless steel internals. All repair kits include high grade HNBR internal seals and are packaged in a sturdy resin case for easy storage and transport.

Orifice Fitting Repair Kits that substitute Garlock® gaskets for the standard Canalta body, valve seat and seal bar O-ring seals are available for servicing our competitors' product. Please contact us directly for full details.



To view the complete ***Canalta Parts Catalogue***, visit us online at
www.canaltaflow.com/parts

FLOW CONDITIONING ACCESSORIES

Contour™
Flow Conditioning Solutions
by Canalta

Flow profile is critical to differential pressure measurement accuracy. Swirl effects, turbulence and pulsation all degrade the accuracy of your meter and potentially reduce profits. You can protect your bottom line.

Canalta offers a variety of ***OEM Flow Conditioning Elements*** to perfectly match all of our Dual Chamber Orifice Fitting models. By delivering a fully developed flow profile to your measurement device, regardless of upstream piping, our lineup of Contour™ Flow Conditioners allow you to drastically reduce the amount of straight run upstream piping required. Cost, size an weight are reduced without significant drops in pressure or reliability.

Contour™ K5 Flow Conditioners are designed and manufactured to the exact geometries of the popular K-Lab / Nova design. Years of testing by third parties has made this geometry a veritable industry standard, and Canalta's robust quality control program ensures that our customers receive the best flow conditioners possible.

Canalta also offers the the Contour™ Z Flow Conditioner, featuring the 32-hole Zanker plate geometry, as well as the Contour™ Vane Flow Straightener. All units are available for pipe sizes 2" through 30" in all standard schedules, with custom schedules by special order.

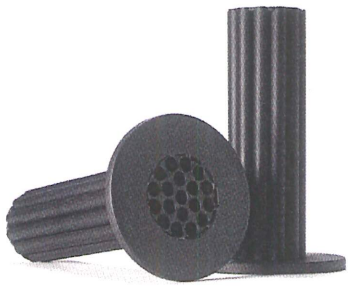

Contour™ Vane Flow Straightener

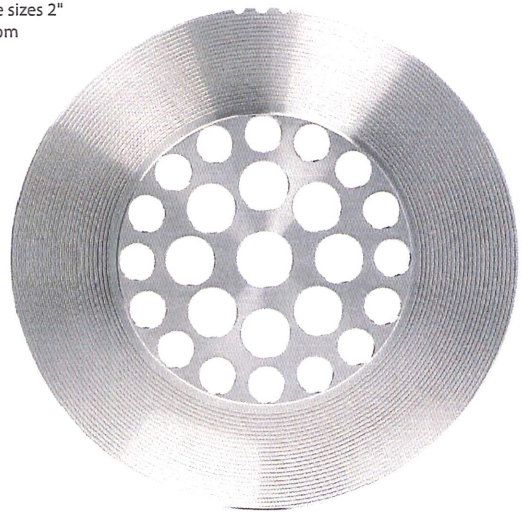

Contour™ K5 Flow Conditioner

Canalta's ***Contour™ FCH Flow Conditioner Housing*** brings the ease, safety and practicality of inspecting and changing an orifice plate to the flow conditioner. This long overdue concept allows for regular inspections of the flow conditioner without breaking apart the flow line. The Contour™ FCH allows the operator to easily perform flow conditioner inspection and maintenance on the same regular schedule as the orifice plate. With this innovative, patented design, you can be sure that your flow profile has not been degraded by damage, blockage or residue accumulation.

All bore surfaces and internal dimensions within the housing are manufactured to strictly comply with the latest editions of AGA-3 and ISO-5167. The Contour™ FCH is effective for custody transfer applications or any measurement scenario where flow profile and measurement accuracy are critical.

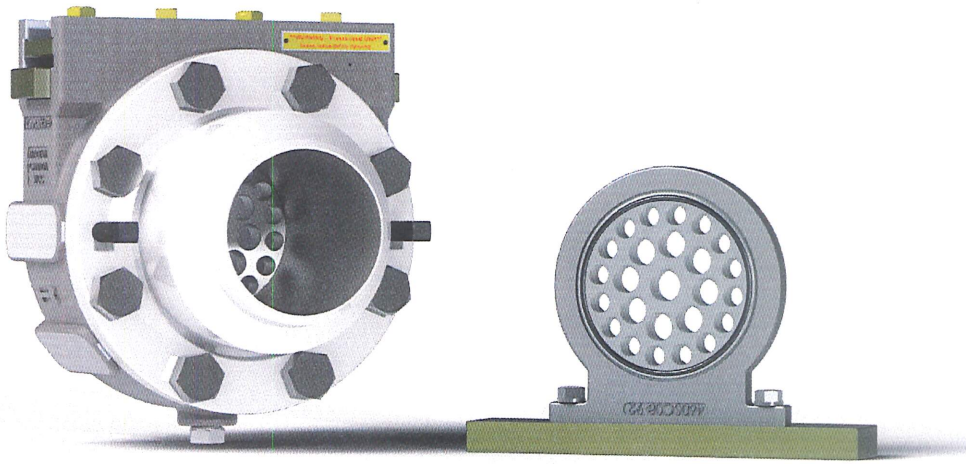

US Pat. 7,806,145



Canalta's Contour™ FCH utilizes the new Contour™ K5+ and Z+ Flow Conditioners. These isolating flow conditioners incorporate a non-protruding HNBR seal around the downstream face to prevent bypass leakage and protect the integrity of your flow profile.

CONTACT US TODAY TO FIND OUT MORE

ORIFICE PLATE SEAL OPTIONS & CARRIER ASSEMBLIES

Type "K" Standard 2000 Edition Seal Assembly

This is the standard seal assembly supplied with all orifice fittings from sizes 2" through 8". This unit is used with a .562" seal gap for fittings sized 2" through 6", and with a .688" seal gap for 8" fittings. The single downstream seal function offers superior sealing capability while reducing seal damage during insertion. Plate seal bypass tested down to 1" water column.

The seal assembly is comprised of an elastomer seal and one stainless steel retainer ring. Exacting and repeatable concentricity is maintained with the metal to metal contact throughout the entire 360° circumference of the orifice plate to the plate carrier mechanism.



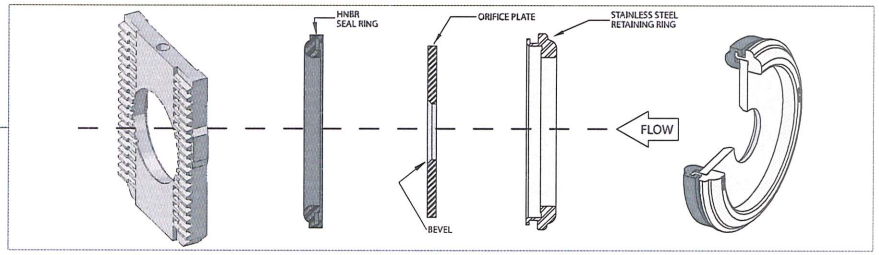

Teflon Snap Seal

The Teflon Snap Seal provides positive plate sealing in the harshest of process environments. The two-piece design snaps over the orifice plate without the use of metal clips or retainers. A specially designed recess absorbs the insertion pressures, minimizing permanent compression and distortion.

The raised section adjacent to the recess creates a positive seal against the orifice plate, preventing bypass leakage. These two unique design features enhance seal performance while extending the life expectancy of the seal assembly.

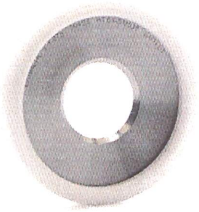

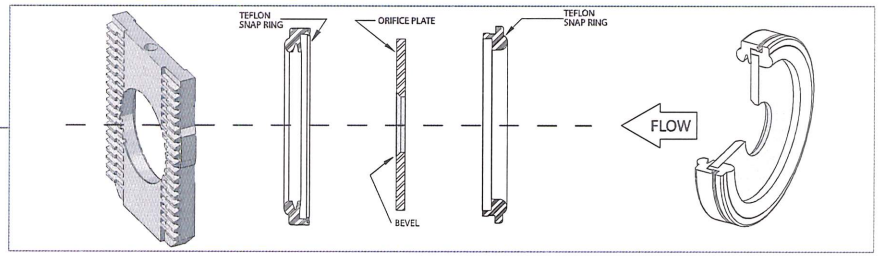

Bonded Seal

This is the standard seal supplied with all Canalta Orifice Fitting model sizes 10" and larger. Designed with a unique "hollow core" recess, this seal has impressive expansion and contraction capabilities when compared to traditional solid rubber seals. The recess allows the seal to absorb insertion pressures, minimizing tearing, distortion and permanent compression. The 80 duro HNBR seal is adhesively bonded to the orifice plate, creating total and permanent contact between the plate and seal and preventing bypass leakage.

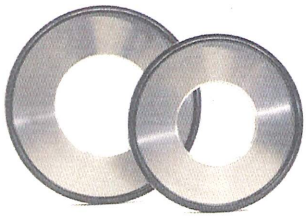

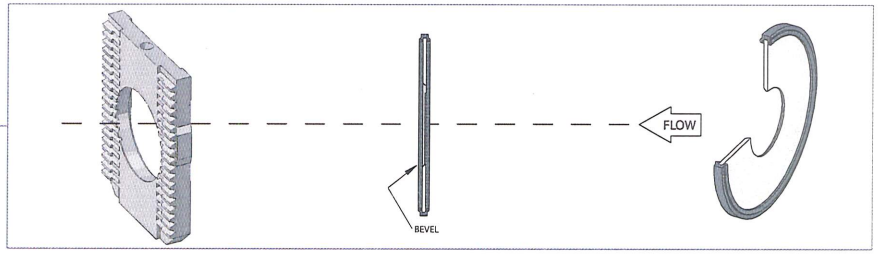

Legacy Replacement Seals

Canalta supplies a selection of legacy plate seals for situations in which direct and exact seal replacement is required or preferred. Models include two piece clip-style Teflon, solid core HNBR or Nitrile and the stainless steel dual ring assemblies.

We will also work with you to custom design and manufacture purpose-built seals for your unique or special applications.

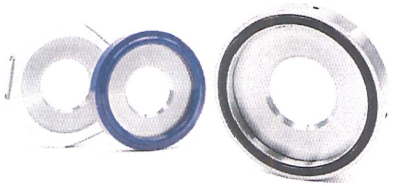

TECHNICAL SPECIFICATIONS

Design	Orifice fittings supplied in Canada are built in accordance with the ABSA Quality Control Program and carry a CRN registration number. Industry Canada Approval Number AF-0014. In compliance with ASME 16.34 and ASME 16.5, ASTM specifications, AGA-3 Latest Edition and ISO-5167.
Body Materials	A216 WCB, A216 WCC, A352 LCC, A358 CF8M, A995 Gr4A, A995 Gr6A, Custom
Internal Parts	AISI 4130 Carbon Steel, 316 or A351 CF8M Stainless Steel
Sizes and ANSI Class	2" through 12" 150 through 2500 ANSI raised face flange 14" through 16", 150 through 1500 ANSI raised face flange 18" through 30", 150 through 600 ANSI raised face flange 600, 900, 1500 and 2500 flanges also available in RTJ face flange
U/S D/S Connections	Flangeneck design (weldneck U/S, flange D/S) Flange x flange Weldneck both ends
Internal Bore Sizes	40, 60, 80, 100, 120, 160 and custom sizes
Sealing Compounds	Seal bar - HNBR O-ring standard, gasket optional Shafts - Teflon packing standard, HNBR O-ring optional Inner valve - Grease seal standard, HNBR O-ring optional Orifice plate - Type "K" 2000 Edition formed HNBR seal on a 316 SS retainer ring Dual Ring HNBR O-rings standard on a 316 SS retainer ring assembly Teflon Snap Seal two-piece virgin Teflon assembly
Line Bore I.D. Tolerance	In conformance with AGA-3 and ISO-5167 Latest Editions
Eccentricity Repeatability	In conformance with AGA-3 and ISO-5167 Latest Editions
Tap Connections	Two 1/2" NPT per side standard, two 1/2" NPT additional per side optional (TT) 2" and 3" fitting sizes center bored to .375" inside diameter 4" and larger sizes center bored to .500" inside diameter Tolerance +/- 1/64"
Orifice Plate Seal Gap	2" through 6" = 0.562", 8" through 14" = 0.688", 16" through 20" = 0.813", 24" through 30" = 0.875"
Operating Shaft Location	Left hand mount standard on sizes 2" through 14" Dual operation on sizes 16" and larger
Operating Temperature	Standard at -20° to 100° F, optional -40° to 1200° F
Operating Position	Vertical or horizontal

Conformance

All fittings come standard with a documentation package including hydro-test, function test, inner valve seal test, quality control inspection and material test reports. Trace ability is maintained in accordance with the ISO-9001 Quality Control Program. All fittings are manufactured within the guidelines of ASME 16.34 and ASME 16.5. When required, radiography, stress relief, ultra-sonic and liquid dye penetration tests can be performed with the relevant report submitted.

Reporting

An AGA 2000 inspection report is included with the purchase of every fitting. The documented tests include:

- I.D. Bore Tolerance
- Tap Communication
- Orifice Eccentricity
- Instrument Tap Diameter
- Plate Seal Test
- Bore Inside Diameter
- Instrument Tap Location
- Seal Protrusion
- Bore Roughness



Our *Quality Management* systems guarantee that your **Canalta Orifice Fittings** are fully function and pressure tested, AGA-3, API 14.3 and ISO 5167 compliant and ***ready for service***

VALVE LOCK-OUT MECHANISM

After numerous requests from our customers, Canalta designed a valve lock-out mechanism to provide extra protection on the inner valve pinion gear. Requiring a manual reset before the inner valve may be opened, this security accessory provides an added opportunity for safety assessment and operator awareness. Two holes in the lock-out mechanism's mounting bracket allow the unit to be locked with any standard padlock as a protection against tampering or other unauthorized operation. In addition, the mechanism is attached to the fitting body with two fasteners that require a non-standard tool for removal, adding further security.

The mechanism also provides clear visual indication of valve status (open / closed) by means of a retainer that rotates with the pinion gear shaft during operation.

To open the inner valve with the valve lock-out mechanism in place, first depress and hold the lever arm, then rotate valve's operator gear shaft with the operating wrench. Rotation will automatically stop when the valve is fully open, and the mechanism's retainer will be in the "OPEN" position.

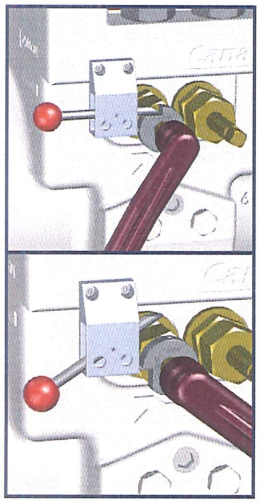

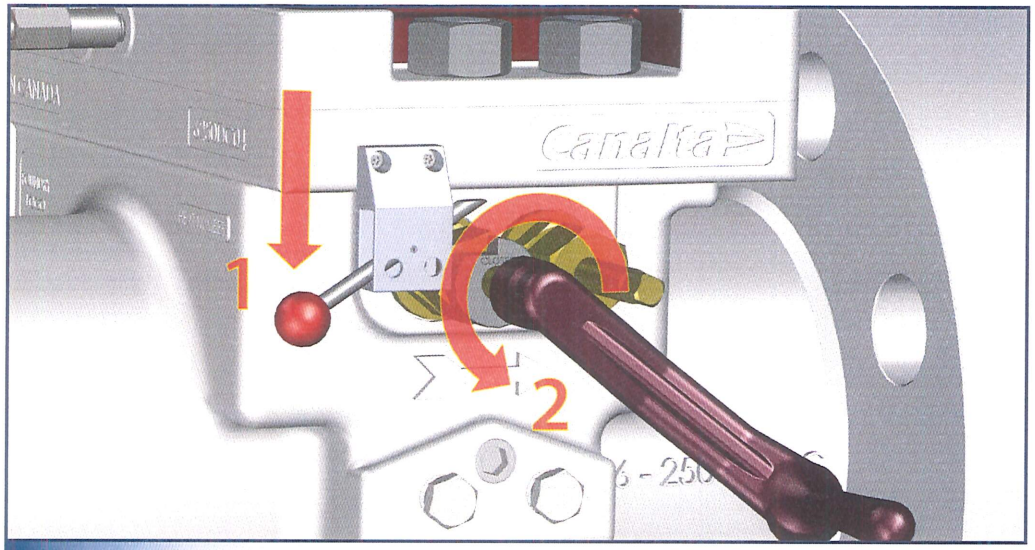

NORMAL OPERATION

The Canalta Dual Chamber Orifice Fitting allows for accurate placement of an orifice plate in the flow line, along with easy removal and replacement, without interrupting the flow or dismantling the pipeline. Flow of the gas or liquid through the orifice plate creates the differential pressure which is measured and used for the calculation of the flow rate through the pipeline.

The unit is in normal metering status when the plate carrier and orifice plate are in the lower chamber, concentric to the flow line, and the inner slide valve, equalizer valve and bleeder valve are all closed. The upper chamber of the unit is at atmospheric pressure, and the clamping bar at the top of the unit is tight.

Pressure sensors installed in the lower housing's meter taps read the differential pressure across the orifice plate and transmit the readings to a flow computer or chart recorder.

Orifice plate condition is critical to accurate metering. The orifice plate must be removed and inspected for damage, general wear and particulate build-up regularly. Prior to beginning the orifice plate removal procedure, the operator must confirm that the clamping bar is tight and that the bleeder valve is fully closed.

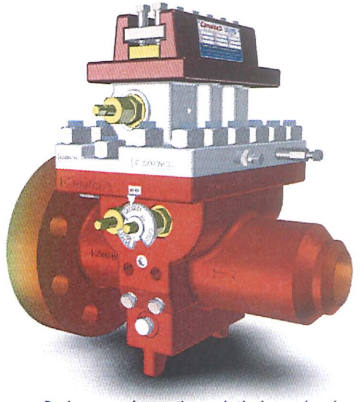

During normal operation, only the lower chamber is pressurized. Atmospheric pressure in the upper chamber is necessary for proper functioning of the inner slide valve.

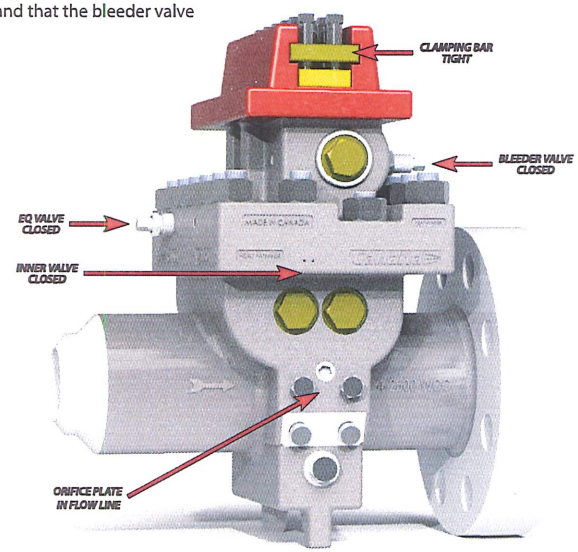

Note: Grease gun removed from this image for clarity.

KEY OPERATING PARTS AT A GLANCE

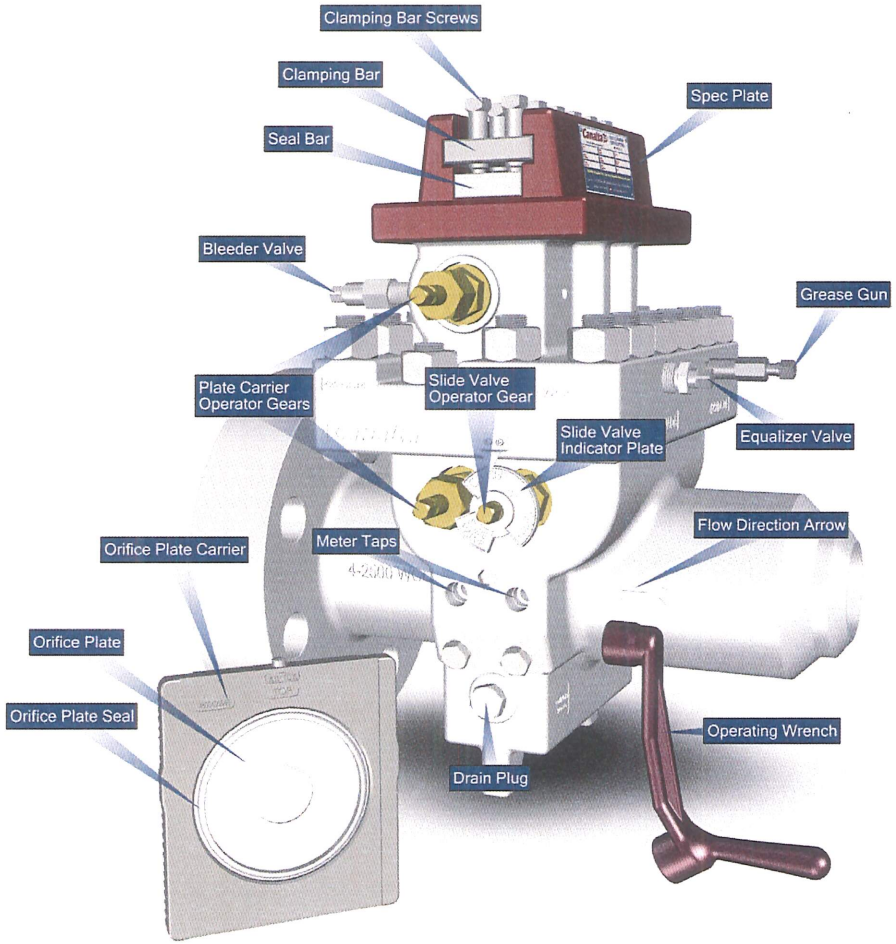

REMOVING THE ORIFICE PLATE

WARNING: Prior to beginning the procedure, confirm that the clamping bar is tight and that the bleeder valve is fully closed.

WARNING: THE UNIT MAY BE UNDER EXTREME HIGH PRESSURE. Failure to depressurize the top housing before attempting to remove the seal bar may result in bodily harm or death. Follow all instructions carefully. Stay clear of the top opening at all times and ensure that the bleeder valve is vented away safely.

1. Slowly open the equalizer valve to pressurize the top chamber equal to the flow line pressure.
2. Open the inner slide valve. (See previous for operating inner valves with the valve lock-out mechanism).
3. Starting with the lower plate carrier operator gear, rotate the gear shaft to raise the plate carrier using the operating wrench until it engages the upper plate carrier pinion gear. Rotate the upper operator gear until the plate carrier stops against the seal bar.
4. Rotate the slide valve operator gear to close the inner slide valve. ***Ensure the inner slide valve is completely closed.***
5. Fully close the equalizer valve.
6. Open the bleeder valve to fully depressurize the top chamber.
7. Lubricate the slide valve through the provided grease gun (see below).
8. Loosen the top clamping bar screws. **DO NOT REMOVE THE CLAMPING BAR.**
9. Rotate the upper plate carrier pinion gear to raise the plate carrier and dislodge the seal bar.
10. Remove the clamping bar and seal bar. Raise the plate carrier through the opening for access.

Complete dimensions tables for all of our orifice fitting models are available by contacting your nearest Canalta Flow Measurement sales representative.

Find a list of our offices and global distribution partners at
www.canaltaflow.com/global

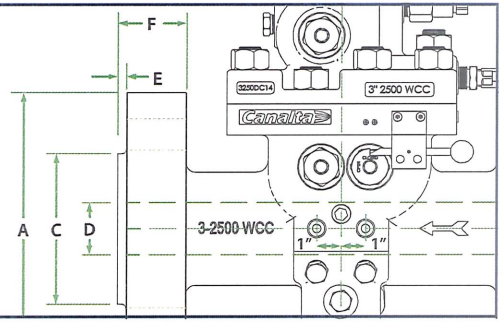

REPLACING THE ORIFICE PLATE

1. Fully close the bleeder valve.
2. Ensure that the orifice plate and seal are configured in the plate carrier with the plate seal and orifice plate bevel facing downstream (see right).
3. Insert the plate carrier assembly into the open top slot of the orifice fitting with the gear surface facing downstream, ensuring that it sits squarely on the top operator gears and is parallel to the top surface of the fitting's top housing.
4. Slowly rotate the upper plate carrier operator gear until the plate carrier clears the seal bar level of the top housing. DO NOT LOWER THE PLATE CARRIER ONTO THE INNER SLIDE VALVE. Ensure that the plate carrier is not crooked or otherwise falling out of level.
5. Replace the seal and clamping bars, and tighten the clamping bar screws.
6. Ensuring that the bleeder valve is closed, slowly open the equalizer valve to match pressure levels in the fitting body and top housing.
7. Rotate the slide valve operator gear to open the inner slide valve.
8. Rotate the upper plate carrier operator gear to lower the plate carrier into the fitting body. Rotate the lower plate carrier operator gear until the carrier makes contact with the bottom of the fitting.
9. Close the inner slide valve to seal off the top housing from the fitting body.
10. Fully close the equalizer valve.
11. Open the bleeder valve to release pressure from the top housing.
12. Lubricate the slide valve through the provided grease gun (see below).
13. Fully close the bleeder valve.

WARNING: PRESSURIZED UNIT. Ensure all operating staff are trained in the safe operation of this and all other pressurized equipment. These instructions are attached to the top housing of each Canalta Dual Chamber Orifice Fitting.

Looking for general assembly diagrams? Contact your nearest Canalta Flow Measurement sales representative to get all of the technical documents you need.

Find a list of our offices and global distribution partners at
www.canaltaflow.com/global

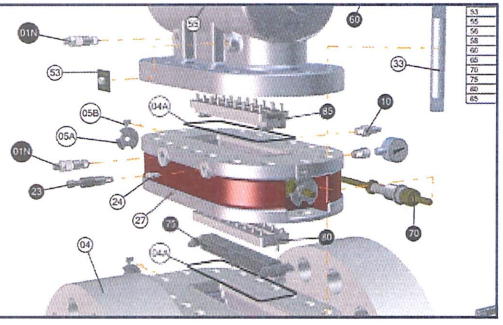

When replacing the orifice plate, proper positioning of the orifice plate and plate carrier is crucial to both proper operation and metering accuracy.

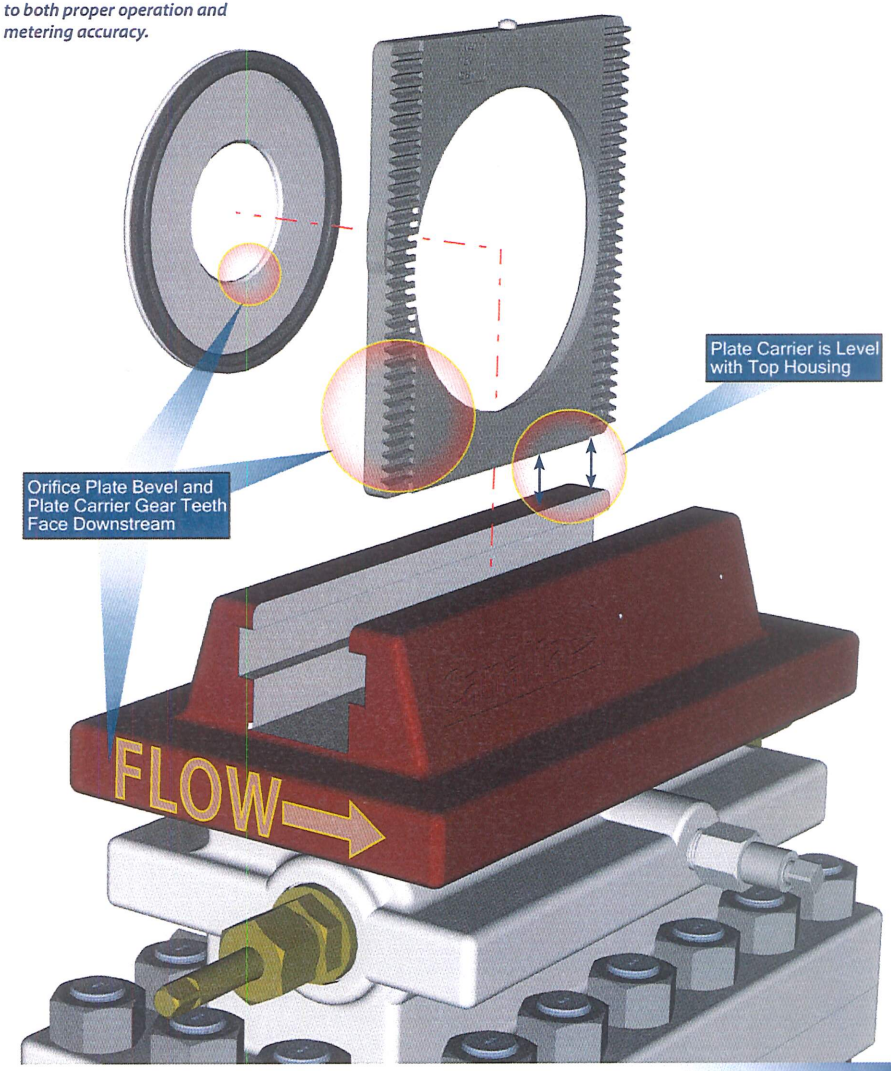

SLIDE VALVE LUBRICATION

GREASING PROCEDURE

The metal-to-metal grease seal design requires lubrication on a regular basis. For the procedure to be successful, a pressure differential across the slide valve being serviced is required, with the chamber immediately below the valve having a higher pressure and forcing the valve strip up against the seat. The double ball grease check valve prevents process pressure from coming through the grease port. For best results, use only valve seal grease supplied by Canalta and recommended for the applicable service.



1. Ensure that the inner slide valve and equalizer valve are fully closed, and that the upper chamber is depressurized.
2. Open the bleeder valve and allow the top chamber to depressurize. A pressure differential now exists between the lower and upper chambers, and the slide valve is ready to be greased.
3. Remove the threaded stem from the grease gun assembly. Insert one stick of grease.
4. Replace the grease gun stem and turn in slowly so as not to rupture the grease channel seal.
5. Repeat steps 3 and 4 if additional grease is required. Larger units require more grease.
6. Close the bleeder valve.

** Note: use only Canalta-supplied grease guns to apply grease to the slide valve.*

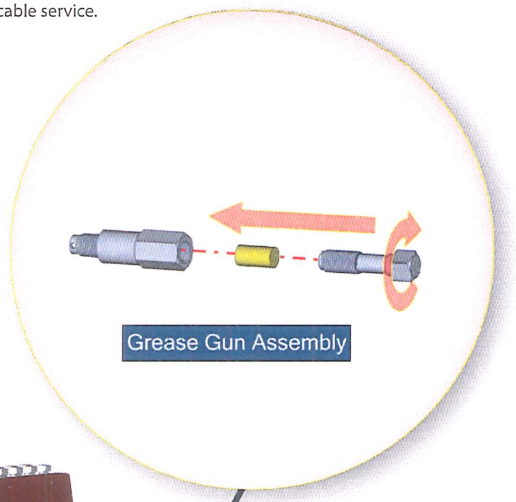

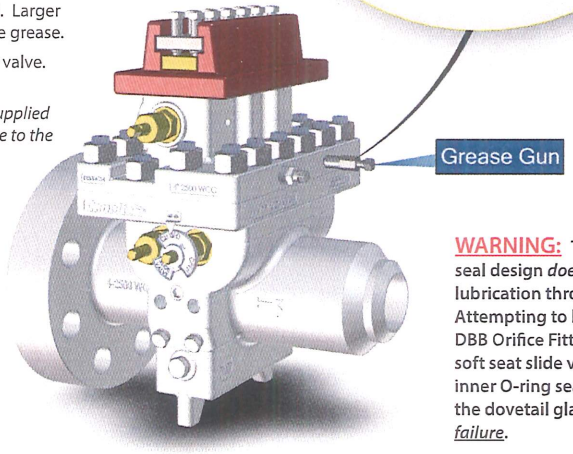

WARNING:
PRESSURIZED UNIT.
Ensure all operating staff are trained in the safe operation of this and all other pressurized equipment.

WARNING: The soft seat valve seal design *does not* require lubrication through the grease port. Attempting to lubricate a Canalta DBB Orifice Fitting equipped with soft seat slide valves will cause the inner O-ring seals to be ejected from the dovetail glands *resulting in valve failure*.

MAINTENANCE & STORAGE REQUIREMENTS

PREVENTIVE MAINTENANCE

The Canalta Dual Chamber Orifice Fitting has a number of moving parts that benefit from a regular preventive maintenance program. The following procedures are recommended:

- Remove and inspect the orifice plate and seal monthly. Replace as required;
- Grease the inner slide valve at least monthly, or more frequently if possible (see soft seat warning left).
- If the greasing procedure is not performed for 90 days or more, remove the top housing of the orifice fitting and reapply grease to the valve seat grease track by hand.
- Disassemble the orifice fitting every two years or earlier if deemed necessary. Inspect the inner working parts for corrosion and wear. Replace the working parts as required and replace all seals prior to reassembly.

PRESERVATION & STORAGE

The following measures should be taken to preserve and store all orifice fittings and meter runs that are not currently in service:

- Hydrostatic testing is required before entering service if stored for more than 1 year;
- Apply valve seal grease via grease gun every 3 months to prevent hardening of the sealant medium (see soft seat warning left);
- Apply rust inhibitor every 3-6 months inside the bore to prevent rust and corrosion;
- Store in dry conditions, preferably indoors to prevent rust and corrosion;
- The end caps shipped with the meter run or fitting should be left in place during storage.



INSTALLATION RECOMMENDATIONS

The Dual Chamber Orifice Fitting is typically installed in conjunction with upstream and downstream meter run sections (tubes). This is essential to meet the recommendations of both AGA Report 3 and ISO 5167. To obtain the best measurement results, follow the recommended piping configurations and installation requirements of either of these two standards, as well as the recommendations below.

1. Always ensure that operating staff are competent and properly trained to operate this and all other pressurized equipment.
2. Attention to clearances is essential. Consult the available dimensional drawings and tables for details. Ensure there is operating clearance at the sides of the fitting for pinion gear rotation and operating wrench removal. Ensure, too, that there is clearance above the top of the fitting for removal of the orifice plate carrier.
3. When installing the fitting or meter run, check that the flow arrow corresponds to the direction of flow in the line.
4. The unit can be installed either in a vertical or horizontal flow orientation. When mounting horizontally, the top housing should be located in the upper position for ease of operation as well as to avoid liquid and debris from accumulating in the upper chamber.
5. When used to measure wet gas, the vertical mount is recommended to prevent dam formation against the orifice plate.
6. Instrument tap lines should be installed sloping upward to the differential pressure measurement instrument. Where this cannot be accomplished, use seal pots to chemically seal the sensing lines in order to eliminate hydrostatic head errors.
7. After the orifice fitting has been piped in, install the bleeder valve, grease gun and indicator plate on the slide valve pinion gear.
8. With the two drive screws provided, install the valve position pointer. Ensure that the position on the valve indicator plate corresponds with the position of the slide valve.
9. It is recommended that the bleeder valve vent be piped away from the fitting to a safe venting area.
10. To avoid damage to the orifice plate, ensure the orifice plate and plate carrier are removed from the fitting prior to pressure testing the system.
11. Before inserting the orifice plate and plate carrier into the fitting, always ensure that the lower cavity of the fitting is free of debris. If debris has accumulated, remove the lower drain plugs and rod-clean the lower section.
12. Dual Chamber Orifice Fittings equipped with the grease style slide valves were lubricated at the factory prior to shipment. If the unit has been sitting out of service for more than six months, it is recommended that the unit be lubricated prior to being put into service. Refer to the "Greasing Procedure".
13. To avoid over range damage to the differential measurement instruments and orifice plate during initial pressurization, ensure the orifice plate is rolled up out of the flow stream and that the instrument manifold equalization valves are open.

MODEL NUMBERING SYSTEM

Each individual Canalta Orifice Fitting is assigned a model number which can be found on the unit's sales and quality control documentation. These model numbers facilitate quick identification of specific features of an orifice fitting, such as pipe schedule, body material and applicable standard. To understand the model number on your Canalta Orifice Fitting, use the legend below.

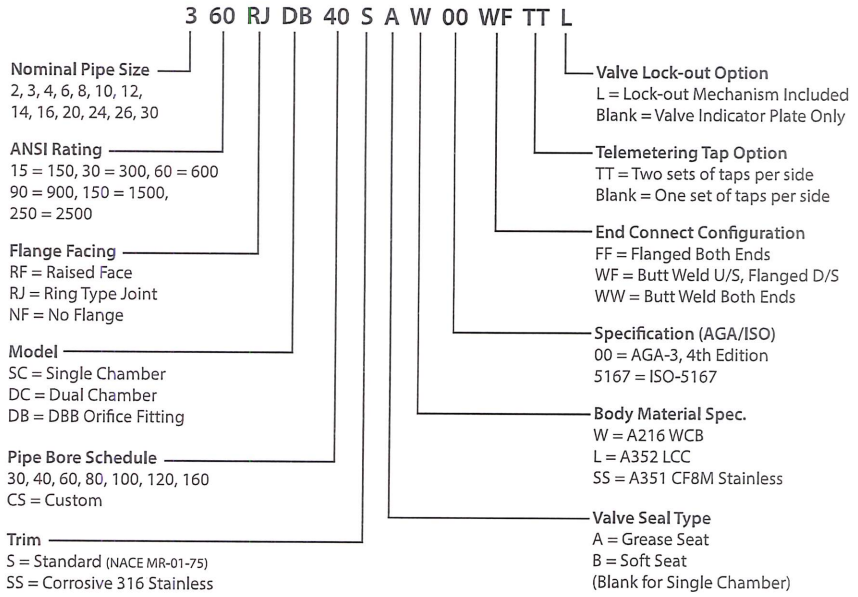

Note: the orifice fitting model number may deviate slightly from this legend in cases where exotic materials or other custom features are included. Please contact us directly for any questions or concerns regarding your Canalta Orifice Fitting.

ADDITIONAL PRODUCT LINES

Canalta also offers a complete lineup of products to fulfill your orifice metering requirements. Visit us on the web at **www.canaltaflow.com**, or contact us to request details.

The Canalta DBB Orifice Fitting

Designed after HSE HSG 253 Cat 2 Isolation, the Canalta DBB Orifice Fitting brings new levels of safety and user functionality to D.P. flow measurement. Two valves separate the operator from high pressures and toxic flow media, and pressure gauges with BOP protection provide added security during operation.

Available as fitting only, retrofit package or with complete meter run, 150# - 2500# ANSI ratings, in a variety of material and connection configurations.

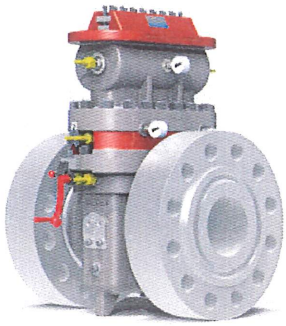

Patent Pending

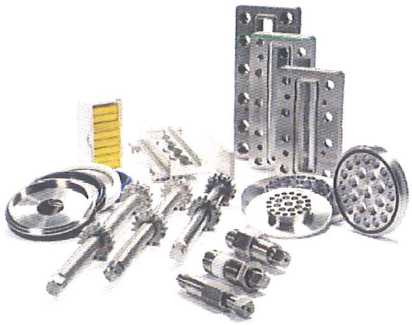

Parts, Accessories & Repair Kits

Parts and repair kits available for all of our orifice fitting models, meter runs and flow conditioning solutions.

Our parts and accessories offerings are interchangeable with the current industry standard orifice fitting brand, making Canalta Orifice Fitting internals suitable for re-builds and re-works of our competitors' product lines at substantial cost savings.

CONTACT INFORMATION

Canalta
Flow Measurement
A Canalta Controls Company

Phone: 403.342.4494 **Email:** sales@canaltaflow.com
Fax: 403.346.7110 **Web:** www.canaltaflow.com

Call Us Toll Free: 1-855-CANALTA

6759 65th Avenue
Red Deer, AB T4P 1X5
CANADA

Find a list of our global distribution partners at **www.canaltaflow.com/global**

The "Canalta Flow Measurement" and "Contour" names and logos are trademarks of Canalta Controls Ltd. All other trademarks are the property of their respective companies.

All information presented here is for information purposes only. Though every effort has been made to ensure their accuracy, the contents of this publication shall not be construed as warranties or guarantees, expressed or implied, regarding the products or services described herein, or their use or applicability. Due to Canalta's commitment to quality and innovation, all product designs, specifications and information material, including the contents of this publication, are subject to change without notice. Responsibility for the proper selection, maintenance and use of any product remains with the customer. SAFETY FIRST.

Copyright, trademark and other forms of proprietary rights protect the contents of this publication.

© 2011-2013 Canalta Controls Ltd. All rights reserved. Unauthorized reproduction in whole or in part is prohibited.

10 / 2013

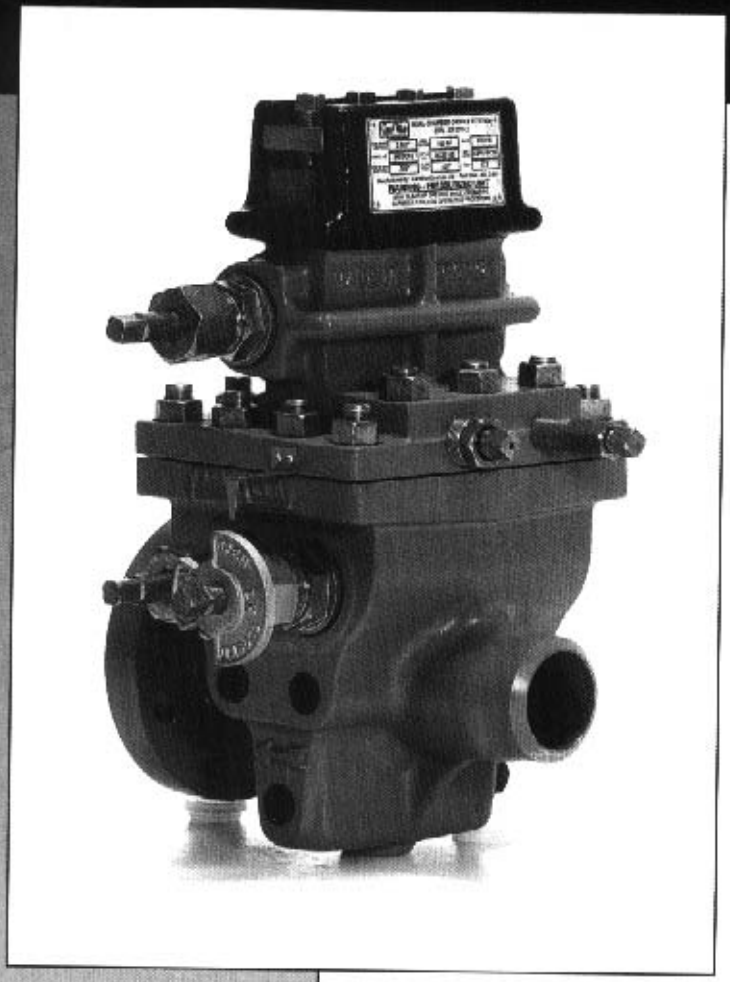

MODEL "DC" Dual Chamber Orifice Fitting

The CanAlta Dual Chamber Orifice Fitting provides an economical and high quality solution for the insertion of flow measurement orifice plates into a flow line under pressure.

The CanAlta DC Fitting meets all the latest ANSI, API and AGA recommendations including API 14.3 eccentricity requirements for maximum flow measurement certainty. The orifice fitting has been certified by the Alberta, British Columbia and Saskatchewan Boiler's Association for pressure service. In addition, the unit holds an Industry Canada Approval for custody transfer measurement applications.

CANALTA CONTROLS LTD.

INDUSTRIAL CONTROL & MEASUREMENT EQUIPMENT

MODEL "DC" DUAL CHAMBER ORIFICE FITTING

For further information or pricing, please contact

CANALTA CONTROLS LTD.

6770 - 65th Avenue
Red Deer, AB T4P 1A5

Phone: 403.342.4494
Fax: 403.346.7110

email: canalta@canalta.ab.ca
www.canalta.ab.ca

All Fittings and Meter Runs come complete with the quality controls inspection tests and reports applicable to the ISO 9000 recommendations. Mill Test, Hydro-Test, Radiography Test and Stress Relief reports are filed when applicable and available for inspection when required. The fittings are constructed in accordance with ASME 16.34 and 16.5. The Meter Runs are constructed in accordance with ASME 31.3.

All internal parts come standard in carbon steel with yellow zinc plating. Internal parts are optionally available in 316 SS to meet NACE specifications or when other corrosive environments may be encountered. The internal isolation valve is available with the conventional grease seal or optionally available with a soft 'O' Ring Seal.

The orifice plate carrier is designed to accept the standard existing seals or the patent pending, CanAlta Dual Ring Orifice Plate Seal Assembly. This unique design utilizes a variety of standard 'O' Rings to meet the harshest process requirements. The two piece assembly mounts and secures directly into the existing plate carrier enabling quick and easy plate changing while maintaining the strict eccentricity requirements for API 14.3. By using this assembly along with the precision manufactured plate carrier and by realigning the carrier guide pins, previous versions of the similarly designed fittings may be brought up to the new standards recommended by AGA.

CanAlta Dual Ring Orifice Plate Seal Assembly*

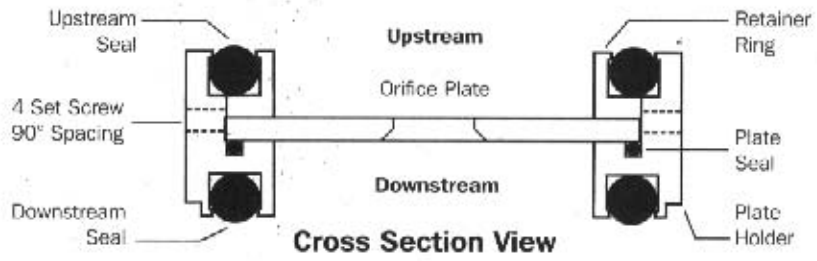

**Patent Pending*

A full line of quality parts are stocked for timely repairs as well as a fully equipped shop to carry out repairs and revisions. Fittings are also available complete with standard meter runs built to the latest requirements and recommendations as per A.G.A. Report No. 3, "Specification and Installation Requirements" or custom built to customers specifications. All fittings come standard with a "CanAlta" inspection report or optional 3rd party inspection report.

Ordering Information... *(Specify Model#)*

Flangenek Model Designation

3 60 RJ DC 40 N A - 92 **Add Suffix IF OPTION IS APPLICABLE**

- AGA Edition - 85, 92
- Valve Seal - A: Grease B: Soft
- Trim - Blank: Standard N: Nace Service
- Pipe Schedule - 40, 80, 160
- Model - DC
- Flange Face - Blank: Raised Face RJ: Ring Joint
- ANSI Rating - 15 - 150, 30 - 300, 60 - 600, 90 - 900
- Nominal Pipe Size - *(In Inches)* 2, 3, 4, 6, 8, 10, 12

Specifications

Design	Registration: C.R.N. – OF2015 Industry Canada Approval No. AF-0014 Dual Chamber – Weld Neck Upstream, Flanged Downstream Conforming to ASME 16.34, 16.5 and ASTM Specifications Meeting Recommendations as per: AGA – 85 Standard AGA – 91 (API 14.3) Optional
Body Materials	A216 WCB Standard A352 LCC Optional
Internal Parts	C.R.S. Zinc Plated Standard 316 S.S. Optional (NACE)
ANSI Size and Class Rating	2" through 12" in 150 through 900 R.F. Series 2" through 12" in 600 and 900 R.T.J. Series
Internal Bore Sizes	40, 60, 80, 120, 160
Sealing Materials:	
Body and Seal Bar	Nitrile Seal Standard HNBR Seal Optional Compressed Gasket Material Optional
Shafts	Teflon Packing
Internal Valve	Grease Seal Standard Soft Seal (HNBR O-ring) Optional
Orifice Plate	Molded Nitrile Standard (85 Edition Only) Molded HNBR Optional (85 Edition Only) 316 SS Seal Ring Assembly Optional (API 14.3 Edition) Teflon Seal Ring Assembly Optional (85 Edition Only)
Line Bore I.D. Tolerance	. 1% of Line I.D. Maximum to Minimum
Line Bore Roughness	Maximum 100 Micro Inch
Eccentricity Repeatability	. 5% of Line I.D. Maximum
Tap Connection	2 **-** ½" NPT Each Side
Tap Bore	**.** 375" on sizes 3" and under .500" on sizes 4" and over Tolerance: +/- .010" Maximum
Tap Location	1" From Orifice Plate to Centerline of Tap Bore Tolerance: +/- .015" Maximum on 3" and Under +/- .030" Maximum on 4" and Over
Orifice Plate Seal Gap	85 Edition: .282" Upstream and Downstream 91 Edition: .032" Upstream and Downstream
Operating Shaft Location	Standard on Left Hand Side Looking Downstream Optional Right Hand Side
Operating Temperature	-40 to +275 Deg. F
Operating Position	Vertical or Horizontal

Testing Procedures and Documentation

CanAlta Controls is presently implementing the ISO–9001 Quality Assurance Program.
All orifice fittings are hydro-tested to 1.5 times the maximum working pressure.
A quality assurance and inspection report is included standard with every fitting.
Material Test Reports are standard.
Third party inspection reports are optionally available.
The following tests and inspections are carried out and recorded for each fitting:

- I.D. Bore Tolerance
- Tap Diameter
- Tap Location
- Bore I.D. Tolerance
- Orifice Plate Seal Test
- Bore Roughness
- Orifice Bore Eccentricity
- Tap Hole Communication
- Hydro-test
- Inner Valve Seal Test
- Operational Test

Operating Instructions

To Remove Orifice Plate

(A) Open No. 1 (Max. Two Turns)
(B) Open No. 5
(C) Rotate No. 6
(D) Rotate No. 7
(E) Close No. 5
(F) Close No. 1
(G) Open No. 10B
(H) Lubricate Thru No. 23
(I) Loosen No. 11
Do Not Remove No. 12
(J) Rotate No. 7 To Loosen
No. 9 and 9A
(K) Remove No. 12, 9, and 9A

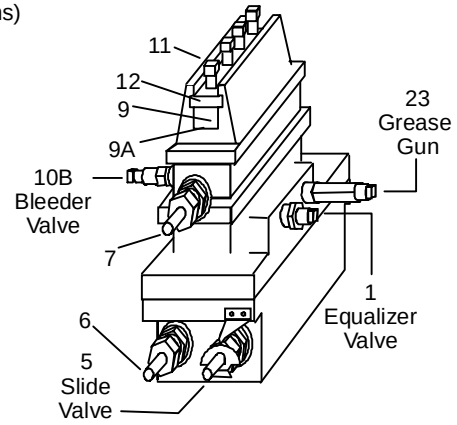

To Replace Orifice Plate

(A) Close 10B
(B) Rotate No. 7 Slowly Untill the
Plate Carrier Clears the Sealing
Bar and Gasket Level. Do Not
Lower Plate Carrier Onto Valve
(C) Replace No. 9A, 9, and 12
(D) Tighten No. 11
(E) Open No. 1
(F) Open No. 5
(G) Rotate No.7
(H) Rotate No. 6
(I) Close No. 5
(J) Close No. 1
(K) Open 10B
(L) Lubricate Thru No. 23
(M) Close No. 10B

This operational drawing is also attached to each fitting on a 316 SS plate

***Warning:** **Ensure the unit is fully depressurized before removing the top seal bar. Always stay clear of the opening. When operating the vent valve ensure the flow is directed away safely.**

Soft Seat Details

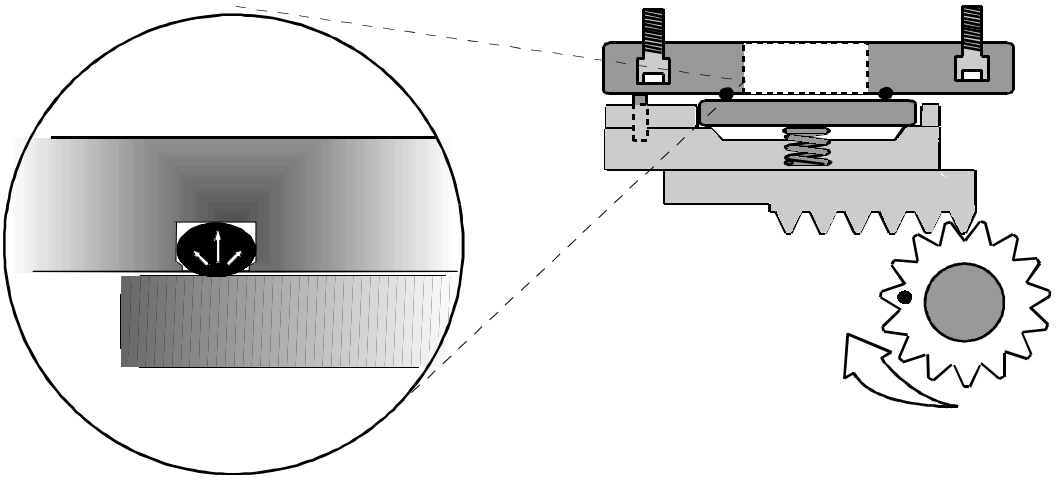

Lubrication Procedure

WARNING The soft seat design does not require any lubrication through the grease port. Lubrication will force the O-ring seal out of the dove tail groove.

The metal to metal seat design does require greasing on a regular basis. For best results use only grease sticks supplied by Canalta. The following procedure should be followed:

1. Insure the slide valve and equalizer valve are in the closed position.
2. Open the bleeder valve and allow the top chamber to depressurize.
3. Remove the threaded stem from the grease gun assembly and insert a stick of lubrication grease.
4. Replace the stem and turn in slowly so as not to rupture the gasket or separate the seat and valve.
5. If additional lubricant is required, repeat steps 3 and 4.
6. Close the bleeder valve.
7. Open the equalization valve.

Dual Ring Seal Assembly

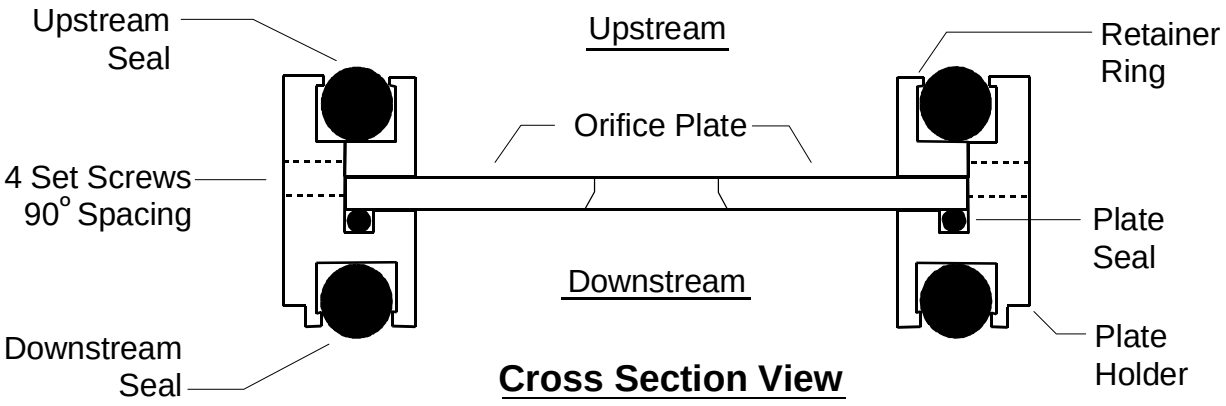

This patented seal assembly unit enables AGA 85 Edition fittings to be upgraded to AGA 91Edition (API 14.3) when properly installed along with other upgrades as required.

The seal assembly secures into the plate carrier with the four setscrews spaced at 90 degrees. The upstream O-ring secures the retaining ring in position that in turn secures the orifice plate in position. The orifice plate is mounted steel to steel within the tight tolerance plate holder. The setscrews are unable to loosen as long as the orifice plate is in place. The seal gap is reduced to .032" on either side when mounted in the fitting. The plate holder and retainer ring is precision machined to match the inside bore of the fitting.

Fitting Installation Procedure

The fitting is normally equipped with a meter run to improve measurement certainty. Canalta can carry out meter run fabrication if so required.

Attention to clearances required for operation is essential. The unit can be installed in either the vertical or horizontal position. When mounting horizontally the top housing should be located on the upper position for ease of operation and to avoid fluid accumulation. When used for gas flow measurement where the possibilities of fluids exist, the fitting should be mounted vertically to allow fluids to pass without damming at the orifice plate. Good piping practices should be incorporated on sensing lines to avoid fluid traps, etc.

Ensure the flow direction arrow corresponds with the process flow direction. Install the bleeder valve, grease gun and indicator plate on the valve shaft. With the two supplied drive screws install the indicator pointer. Remove the orifice plate carrier while hydro testing and while piping debris is being cleared. Before installing the orifice plate and carrier, ensure no debris has settled in the cavity below the carrier position. If so, the clean out plugs can be removed to aid in removal of the debris.

Maintenance

The Canalta Dual Chamber orifice fitting has a number of moving parts that would benefit from a regular maintenance program. It is recommended that the following procedures be carried out on a monthly basis regardless of whether or not the orifice plate requires inspection or changing.

1. Open, close and grease the slide valve as per the previous lubrication instructions.
2. Rotate the gear shafts.
3. If the fitting is equipped with lower blow down valves, rotate the orifice plate up and clear of the lower cavity and blow down as required.

CANALTA DUAL CHAMBER ORIFICE FITTING

STANDARD AND RING TYPE FACINGS
CAST CARBON STEEL
SIZES 2" THRU 12"
150-900 ANSI

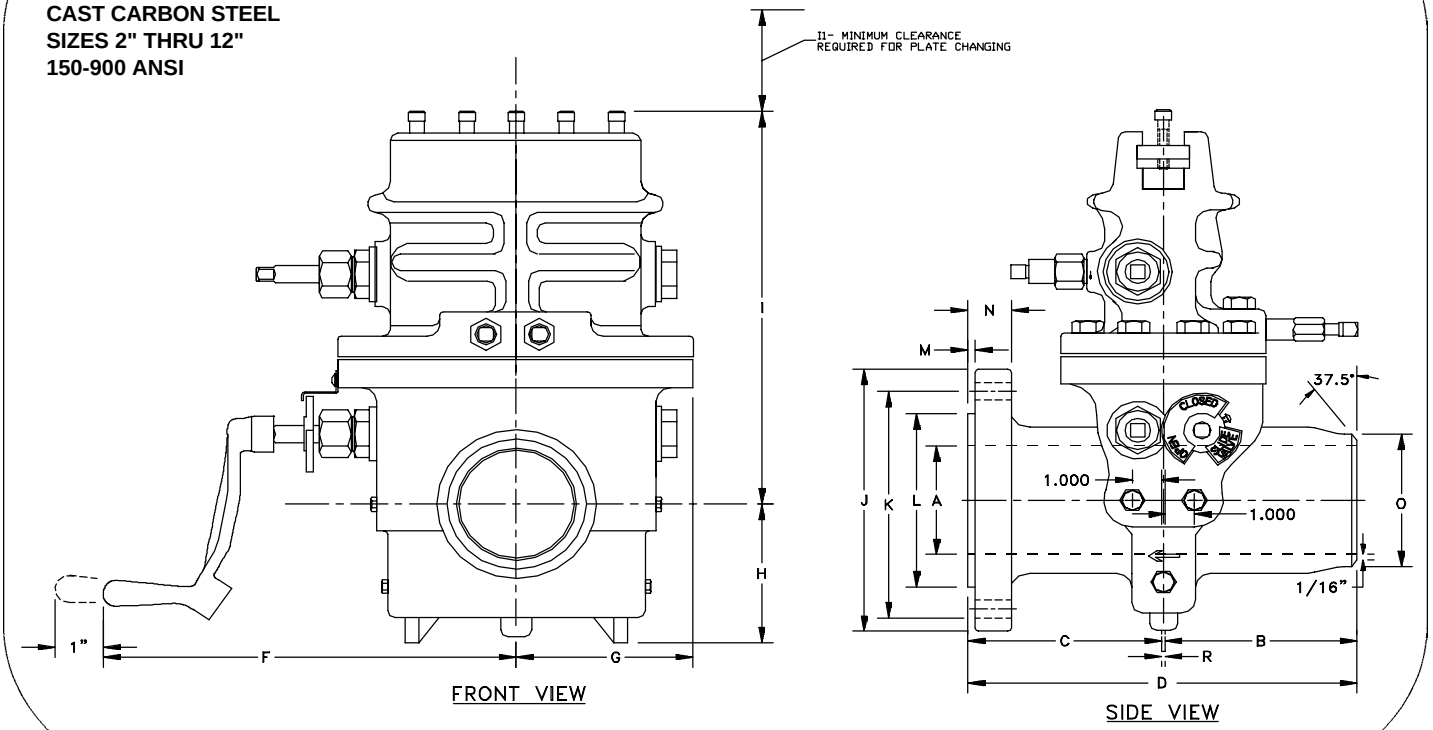

SIZE	Available Pipe Sch.	Upstream Face of Orifice Plate to Face of End	Downstream Face of Orifice Plate to Face of End	Overall Face to Face	Operating Clearance From Center	Body Clearance From Center	Centerline to Bottom	Centerline to Top	Clearance for Plate Changing	Diameter of Flange	Diameter of Bolt Circle	Diameter of Raised Face	Height of Raised Face	Flange Thickness	Number and Diameter of Bolts or Studs (Per Flange)	Length of Bolts (Sq. Head with Hex Nut)	Length of Bolt (Studs with 2 Hex Nuts)	Diameter of Hub at Point of Welding	Size of Drain Plugs	Orifice Plate Thickness	Approximate Weight (Pounds)	SIZE
	A	B	C	D	F	G	H	I	I1	J	K	L	M	N				O	P	R		
ANSI 150 - Flangnek - Standard Facing																						
2	40,80	5 3/16	5 5/16	10 5/8	12 7/8	4 1/4	3 3/4	12 1/2	5 9/16	6	4 3/4	3 5/8	1/16	3/4	4 - 5/8		3 1/4	2 3/8		1/8	100	2
3	40	7 1/8	6 3/8	13 5/8	13 3/4	5 5/16	4 1/8	13 3/4	6 1/16	7 1/2	6	5	1/16	15/16	4 - 5/8		3 3/4	3 1/2		1/8	140	3
4	40	6 1/2	5 3/4	12 3/8	14 1/8	5 13/16	5	15	7	9	7 1/2	6 3/16	1/16	15/16	8 - 3/4		3 3/4	4 1/2		1/8	185	4
6	40	8	6 13/16	14 15/16	15 1/2	7	7 1/2	18	9	11	9 1/2	8 1/2	1/16	1	8 - 3/4		4	6 5/8		1/8	265	6
8	40	8 7/16	7 3/8	15 15/16	16 1/2	8	8 5/8	21 1/16	11	13 1/2	11 3/4	10 5/8	1/16	1 1/8	8 - 3/4		4 1/4	8 5/8		1/8	345	8
10	40	9 3/8	6 9/16	16 3/16	17 3/8	9	10 1/16	24	13 1/8	16	14 1/4	12 3/4	1/16	1 3/16	12 - 7/8		4 3/4	10 3/4		1/4	465	10
12	40	10	7	17 1/4	18 7/8	10 3/4	11 3/4	27	15	19	17	15	1/16	1 1/4	12 - 7/8		4 3/4	12 3/4		1/4	655	12
ANSI 300 - Flangnek - Standard Facing																						
2	40,80	5 3/16	5 5/16	10 5/8	12 7/8	4 1/4	3 3/4	12 1/2	5 9/16	6 1/2	5	3 5/8	1/16	7/8	8 - 5/8		3 1/2	2 3/8		1/8	100	2
3	40	7 1/8	6 1/2	13 3/4	13 3/4	5 5/16	4 1/8	13 3/4	6 1/16	8 1/4	6 5/8	5	1/16	1 1/8	8 - 3/4		4 1/4	3 1/2		1/8	150	3
4	40	6 1/2	6 1/16	12 11/16	14 1/8	5 13/16	5	15	7	10	7 7/8	6 3/16	1/16	1 1/4	8 - 3/4		4 1/2	4 1/2		1/8	200	4
6	40,80	8	7 1/4	15 3/8	15 1/2	7	7 1/2	18	9	12 1/2	10 5/8	8 1/2	1/16	1 7/16	12 - 3/4		4 3/4	6 5/8		1/8	330	6
8	40,80	8 7/16	7 7/8	16 7/16	16 1/2	8	8 5/8	21 1/16	11	15	13	10 5/8	1/16	1 5/8	12 - 7/8		5 1/2	8 5/8		1/8	480	8
10	40	9 3/8	7 1/4	16 7/8	17 3/8	9	10 1/16	24	13 1/8	17 1/2	15 1/4	12 3/4	1/16	1 7/8	16 - 1		6 1/4	10 3/4		1/4	615	10
12	40,80	10	7 3/4	18	18 7/8	10 3/4	11 3/4	27	15	20 1/2	17 3/4	15	1/16	2	16 - 1 1/8		6 3/4	12 3/4		1/4	1110	12
ANSI 600 - Flangnek - Standard Facing																						
2	40,80,160	5 3/16	5 5/16	10 5/8	12 7/8	4 1/4	4 1/8	12 1/2	5 9/16	6 1/2	5	3 5/8	1/4	1 1/4	8 - 5/8		4 1/4	2 3/8		1/8	105	2
3	40,80	7 1/8	6 5/8	13 7/8	13 3/4	5 5/16	4 3/4	13 3/4	6 1/16	8 1/4	6 5/8	5	1/4	1 1/2	8 - 3/4		5	3 1/2		1/8	160	3
4	40,80	6 9/16	6 9/16	13 1/4	14 1/8	5 13/16	5	15	7	10 3/4	8 1/2	6 3/16	1/4	1 3/4	8 - 7/8		5 3/4	4 1/2		1/8	265	4
6	40,80	8	7 15/16	16 1/16	15 1/2	7	7 1/2	18	9	14	11 1/2	8 1/2	1/4	2 1/8	12 - 1		6 3/4	6 5/8		1/8	400	6
8	40,80	8 7/16	8 11/16	17 1/4	16 1/2	8	8 5/8	21 1/16	11	16 1/2	13 3/4	10 5/8	1/4	2 7/16	12 - 1 1/8		7 3/4	8 5/8		1/8	595	8
10	80	9 3/8	8 1/8	17 3/4	17 3/8	9	10 1/16	24	13 1/8	20	17	12 3/4	1/4	2 3/4	16 - 1 1/4		8 1/2	10 3/4		1/4	745	10
12	80	10	8 5/8	18 7/8	18 7/8	10 3/4	11 3/4	27	15	22	19 1/4	15	1/4	2 7/8	20 - 1 1/4		8 3/4	12 3/4		1/4	1215	12
ANSI 600 - Flangnek - Ring Type Joint																						
2	40,80,160	5 3/16	5 3/8	10 11/16	12 7/8	4 1/4	4 1/8	12 1/2	5 9/16	6 1/2	5	4 1/4	5/16	1 1/4	8 - 5/8			2 3/8		1/8	105	2
3	40,80	7 1/8	6 11/16	13 15/16	13 3/4	5 5/16	4 3/4	13 3/4	6 1/16	8 1/4	6 5/8	5 3/4	5/16	1 1/2	8 - 3/4			3 1/2		1/8	160	3
4	40,80	6 9/16	6 5/8	13 5/16	14 1/8	5 13/16	5	15	7	10 3/4	8 1/2	6 7/8	5/16	1 3/4	8 - 7/8			4 1/2		1/8	265	4
6	40,80	8	8	16 1/8	15 1/2	7	7 1/2	18	9	14	11 1/2	9 1/2	5/16	2 1/8	12 - 1			6 5/8		1/8	400	6
8	40,80	8 7/16	8 3/4	17 5/16	16 1/2	8	8 5/8	21 1/16	11	16 1/2	13 3/4	11 7/8	5/16	2 7/16	12 - 1 1/8			8 5/8		1/8	595	8
10	80	9 3/8	8 3/16	17 13/16	17 3/8	9	10 1/16	24	13 1/8	20	17	14	5/16	2 3/4	16 - 1 1/4			10 3/4		1/4	745	10
12	80	10	8 11/16	18 15/16	18 7/8	10 3/4	11 3/4	27	15	22	19 1/4	16 1/4	5/16	2 7/8	20 - 1 1/4			12 3/4		1/4	1215	12
ANSI 900 - Flangnek - Standard Facing																						
2	40,80,160	5 3/16	5 13/16	11 1/8	12 7/8	4 1/4	4 1/8	12 1/2	5 9/16	8 1/2	6 1/2	3 5/8	1/4	1 3/4	8 - 7/8		5 3/4	2 3/8		1/8	205	2
3	40,80,160	7 1/8	6 7/8	14 1/8	13 3/4	5 5/16	4 3/4	13 3/4	6 1/16	9 1/2	7 1/2	5	1/4	1 3/4	8 - 7/8		5 3/4	3 1/2		1/8	215	3
4	80,160	6 9/16	6 13/16	13 1/2	14 1/8	5 13/16	5	15	7	11 1/2	9 1/4	6 3/16	1/4	2	8 - 1 1/8		6 3/4	4 1/2		1/8	300	4
6	80,160	8	8 1/4	16 3/8	15 1/2	7	7 1/2	18	9	15	12 1/2	8 1/2	1/4	2 7/16	12 - 1 1/8		7 3/4	6 5/8		1/8	490	6
8	160	8 7/16	9	17 9/16	16 1/2	8	8 5/8	21 1/16	11	18 1/2	15 1/2	10 5/8	1/4	2 3/4	12 - 1 3/8		8 3/4	8 5/8		1/8	1095	8
10	160	9 3/8	8 3/8	18	17 3/8	9	10 1/16	24	13 1/8	21 1/2	18 1/2	12 3/4	1/4	3	20 - 1 3/8		9 1/4	10 3/4		1/4	1555	10
12	160	10	9 1/8	19 3/8	18 7/8	10 3/4	11 3/4	27	15	24	21	15	1/4	3 3/8	17 - 1 3/8		10	12 3/4		1/4	1935	12
ANSI 900 - Flangnek - Ring Type Joint																						
2	40,80,160	5 3/16	5 7/8	11 3/16	12 7/8	4 1/4	4 1/8	12 1/2	5 9/16	8 1/2	6 1/2	4 7/8	5/16	1 3/4	8 - 7/8			2 3/8		1/8	205	2
3	40,80,160	7 1/8	6 15/16	14 3/16	13 3/4	5 5/16	4 3/4	13 3/4	6 1/16	9 1/2	7 1/2	6 1/8	5/16	1 3/4	8 - 7/8			3 1/2		1/8	215	3
4	80,160	6 9/16	6 7/8	13 9/16	14 1/8	5 13/16	5	15	7	11 1/2	9 1/4	7 1/8	5/16	2	8 - 1 1/8			4 1/2		1/8	300	4
6	80,160	8	8 5/16	16 7/16	15 1/2	7	7 1/2	18	9	15	12 1/2	9 1/2	5/16	2 7/16	12 - 1 1/8			6 5/8		1/8	490	6
8	160	8 7/16	9 1/16	17 5/8	16 1/2	8	8 5/8	21 1/16	11	18 1/2	15 1/2	12 1/8	5/16	2 3/4	12 - 1 3/8			8 5/8		1/8	1095	8
10	160	9 3/8	8 7/16	18 1/16	17 3/8	9	10 1/16	24	13 1/8	21 1/2	18 1/2	14 1/4	5/16	3	20 - 1 3/8			10 3/4		1/4	1555	10
12	160	10	9 3/16	19 7/16	18 7/8	10 3/4	11 3/4	27	15	24	21	16 1/2	5/16	3 3/8	17 - 1 3/8			12 3/4		1/4	1935	12

CanAlta CONTROLS LTD.

CANALTA DUAL CHAMBER ORIFICE FITTINGS
SIZES 2" THRU 12" – 150, 300, 600, 900 ANSI

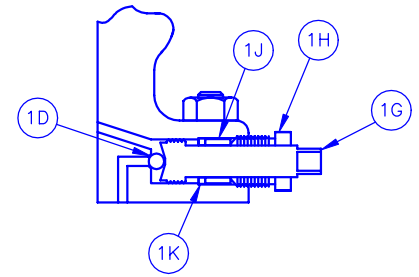

EQUALIZER VALVE DETAIL

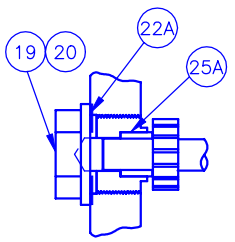

BEARING PLUG DETAIL

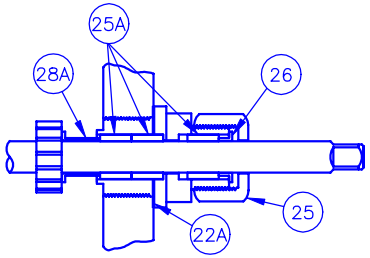

STUFFING BOX DETAIL

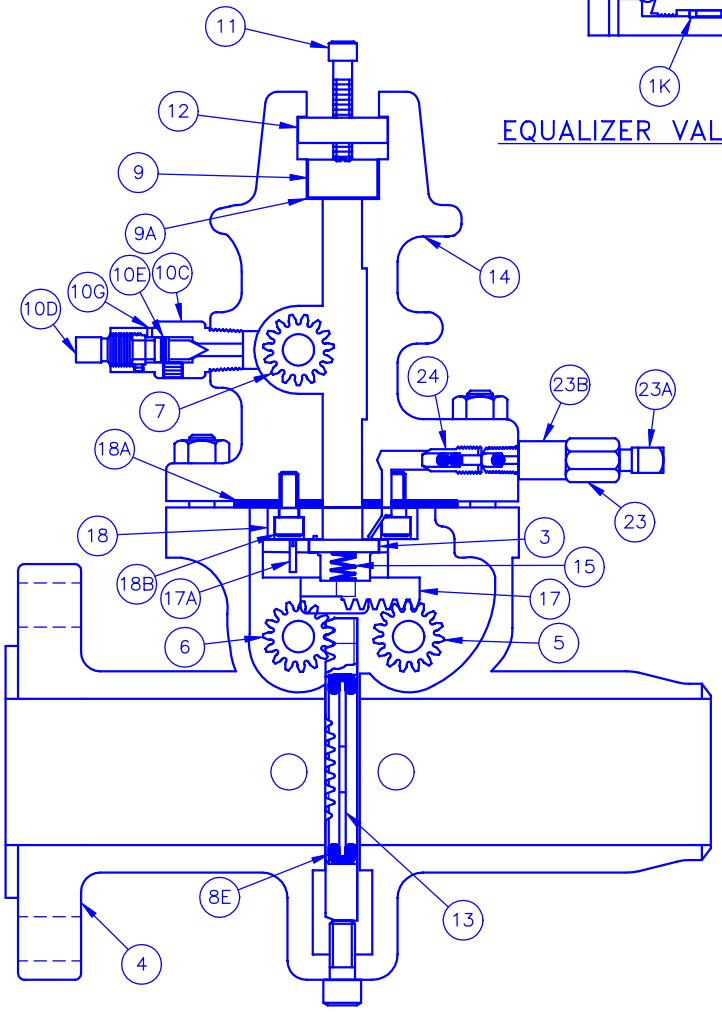

SIDE ELEVATION – SECTIONAL

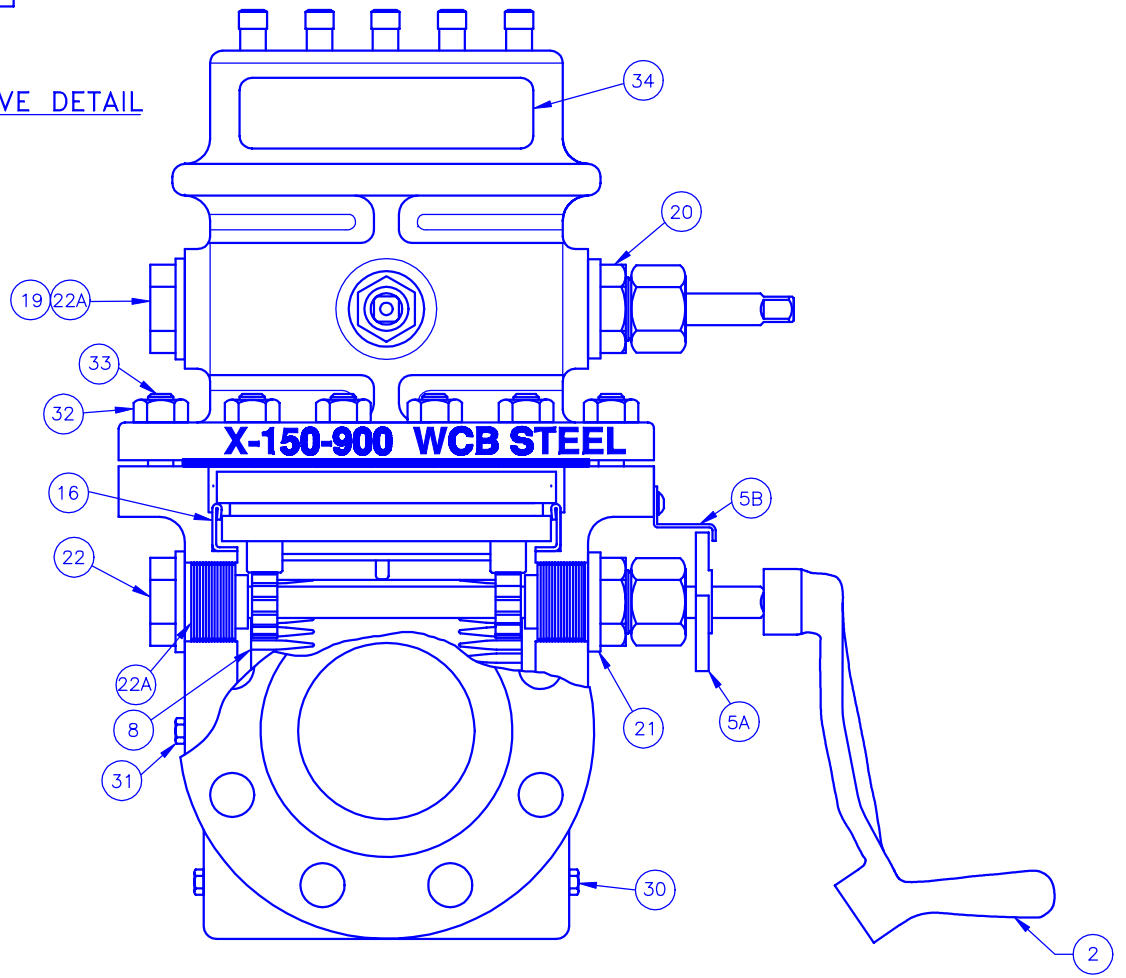

FRONT ELEVATION
PARTIAL SECTIONAL

Canalta Dual Chamber Orifice Fitting
2" Thru 12" - 150, 300, 600, 900 ANSI Rating
Canadian Funds Parts Price List - November 1, 1999

ITEM No.	QTY	DESCRIPTION	MFG/MATERIAL	SIZE	RATING	PART No.			
1	1	EQUALIZER VALVE ASSEMBLY	316 STAINLESS STEEL	2" TO 12"	150LB TO 900LB	C60DC01			
* 1G	1	EQUALIZER VALVE STEM	316 STAINLESS STEEL	2" TO 12"	150LB TO 900LB	C60DC01G			
* 1H	1	PACKING NUT	316 STAINLESS STEEL	2" TO 12"	150LB TO 900LB	C60DC01H			
* 1D	1	BALL	316 STAINLESS STEEL	2" TO 12"	150LB TO 900LB	C60DC01D			
* 1K	1	PACKING WASHER	316 STAINLESS STEEL	2" TO 12"	150LB TO 900LB	C60DC01K			
* 1J	1	PACKING	TEFLON SLEEVES	2" TO 12"	150LB TO 900LB	C60DC01J			
* 2	1	OPERATING WRENCH	MALL. IRON-POWDER COAT	2" TO 12"	150LB TO 900LB	C60DC02			
3*	1	VALVE STRIP	316 STAINLESS STEEL	2"	150LB TO 900LB	260DC03			
				3"	150LB TO 900LB	360DC03			
				4"	150LB TO 900LB	460DC03			
				6"	150LB TO 900LB	660DC03			
				8"	150LB TO 900LB	860DC03			
				10"	150LB TO 900LB	1060DC03			
				12"	150LB TO 900LB	1260DC03			
3A*	1	SOFT SEAT VALVE STRIP	316 STAINLESS STEEL	2"	150LB TO 900LB	260DC03S			
				3"	150LB TO 900LB	360DC03S			
				4"	150LB TO 900LB	460DC03S			
				6"	150LB TO 900LB	660DC03S			
				8"	150LB TO 900LB	860DC03S			
				10"	150LB TO 900LB	1060DC03S			
				12"	150LB TO 900LB	1260DC03S			
4W	1	FLANGNEK BODY	A216 WCB STEEL	2"	150 ANSI R.F.	215DC04W40			
			SCH. 40	2"	300 ANSI R.F.	230DC04W40			
				2"	600 ANSI R.F.	260DC04W40			
				2"	600 ANSI R.T.J	260DC04W40RJ			
				2"	900 ANSI R.F.	290DC04W40			
				2"	900 ANSI R.T.J	290DC04W40RJ			
				3"	150 ANSI R.F.	315DC04W40			
				3"	300 ANSI R.F.	330DC04W40			
				3"	600 ANSI R.F.	360DC04W40			
				3"	600 ANSI R.T.J	360DC04W40RJ			
				3"	900 ANSI R.F.	390DC04W40			
				3"	900 ANSI R.T.J	390DC04W40RJ			
				4"	150 ANSI R.F.	415DC04W40			
				4"	300 ANSI R.F.	430DC04W40			
				4"	600 ANSI R.F.	460DC04W40			
				4"	600 ANSI R.T.J.	460DC04W40RJ			
				4"	900 ANSI R.F.	490DC04W40			
				4"	900 ANSI R.T.J	490DC04W40RJ			
				6"	150 ANSI R.F.	615DC04W40			
				6"	300 ANSI R.F.	630DC04W40			
				6"	600 ANSI R.F.	660DC04W40			
				6"	600 ANSI R.T.J	660DC04W40RJ			
				8"	150 ANSI R.F.	815DC04W40			
				8"	300 ANSI R.F.	830DC04W40			
				10"	150 ANSI R.F.	1015DC04W40			
				10"	300 ANSI R.F.	1030DC04W40			
				12"	150 ANSI R.F.	1215DC04W40			
				12"	300 ANSI R.F.	1230DC04W40			
			A216 WCB STEEL	10"	300 ANSI R.F.	1030DC04W60			
			SCH. 60X	10"	600 ANSI R.F.	1060DC04W60			
				10"	600 ANSI R.T.J	1060DC04W60RJ			
			A216 WCB STEEL	2"	300 ANSI R.F.	230DC04W80			
			SCH. 80	2"	600 ANSI R.F.	260DC04W80			
				2"	600 ANSI R.T.J	260DC04W80RJ			
				2"	900 ANSI R.F.	290DC04W80			
				2"	900 ANSI R.T.J	290DC04W80RJ			
				3"	150 ANSI R.F.	315DC04W80			
				3"	300 ANSI R.F.	330DC04W80			
				3"	600 ANSI R.F.	360DC04W80			
				3"	600 ANSI R.T.J	360DC04W80RJ			
				3"	900 ANSI R.F.	390DC04W80			
				3"	900 ANSI R.T.J	390DC04W80RJ			
				4"	150 ANSI R.F.	415DC04W80			
				4"	300 ANSI R.F.	430DC04W80			
				4"	600 ANSI R.F.	460DC04W80			
				4"	600 ANSI R.T.J	460DC04W80RJ			
				4"	900 ANSI R.F.	490DC04W80			
				4"	900 ANSI R.T.J	490DC04W80RJ			
				6"	300 ANSI R.F.	630DC04W80			
				6"	600 ANSI R.F.	660DC04W80			
				6"	600 ANSI R.T.J	660DC04W80RJ			
				6"	900 ANSI R.F.	690DC04W80			
				6"	900 ANSI R.T.J	690DC04W80RJ			
				8"	300 ANSI R.F.	830DC04W80			
				8"	600 ANSI R.F.	860DC04W80			
				8"	600 ANSI R.T.J	860DC04W80RJ			
				10"	600 ANSI R.F.	1060DC04W80			
				10"	600 ANSI R.T.J	1060DC04W80RJ			
				12"	300 ANSI R.F.	1230DC04W80			
				12"	600 ANSI R.F.	1260DC04W80			
				12"	600 ANSI R.T.J	1260DC04W80RJ			

Canalta Dual Chamber Orifice Fitting
2" Thru 12" - 150, 300, 600, 900 ANSI Rating
Canadian Funds Parts Price List - November 1, 1999

ITEM No.	QTY	DESCRIPTION	MFG/MATERIAL	SIZE	RATING	PART No.			
			A216 WCB STEEL	6"	900 ANSI R.F.	690DC04W160			
			SCH. 160	6"	900 ANSI R.T.J	690DC04W160RJ			
				8"	900 ANSI R.F.	890DC04W160			
				8"	900 ANSI R.T.J	890DC04W160RJ			
				10"	900 ANSI R.F.	1090DC04W160			
				10"	900 ANSI R.T.J	1090DC04W160RJ			
				12"	900 ANSI R.F.	1290DC04W160			
				12"	900 ANSI R.T.J	1290DC04W160RJ			
4L	1	FLANGNEK BODY	A352 LCC LOW TEMP. STEEL	2"	150 ANSI R.F.	215DC04L40			
			SCH. 40	2"	300 ANSI R.F.	230DC04L40			
				2"	600 ANSI R.F.	260DC04L40			
				2"	600 ANSI R.T.J	260DC04L40RJ			
				2"	900 ANSI R.F.	290DC04L40			
				2"	900 ANSI R.T.J	290DC04L40RJ			
				3"	150 ANSI R.F.	315DC04L40			
				3"	300 ANSI R.F.	330DC04L40			
				3"	600 ANSI R.F.	360DC04L40			
				3"	600 ANSI R.T.J	360DC04L40RJ			
				3"	900 ANSI R.F.	390DC04L40			
				3"	900 ANSI R.T.J	390DC04L40RJ			
				4"	150 ANSI R.F.	415DC04L40			
				4"	300 ANSI R.F.	430DC04L40			
				4"	600 ANSI R.F.	460DC04L40			
				4"	600 ANSI R.T.J	460DC04L40RJ			
				4"	900 ANSI R.F.	490DC04L40			
				4"	900 ANSI R.T.J	490DC04L40RJ			
				6"	150 ANSI R.F.	615DC04L40			
				6"	300 ANSI R.F.	630DC04L40			
				6"	600 ANSI R.F.	660DC04L40			
				6"	600 ANSI R.T.J	660DC04L40RJ			
				8"	150 ANSI R.F.	815DC04L40			
				8"	300 ANSI R.F.	830DC04L40			
				10"	150 ANSI R.F.	1015DC04L40			
				10"	300 ANSI R.F.	1030DC04L40			
				12"	150 ANSI R.F.	1215DC04L40			
				12"	300 ANSI R.F.	1230DC04L40			
			A352 LCC LOW TEMP. STEEL	10"	300 ANSI R.F.	1030DC04L60			
			SCH. 60X	10"	600 ANSI R.F.	1060DC04L60			
				10"	600 ANSI R.T.J	1060DC04L60RJ			
			A352 LCC LOW TEMP. STEEL	2"	300 ANSI R.F.	230DC04L80			
			SCH. 80	2"	600 ANSI R.F.	260DC04L80			
				2"	600 ANSI R.T.J	260DC04L80RJ			
				2"	900 ANSI R.F.	290DC04L80			
				2"	900 ANSI R.T.J	290DC04L80RJ			
				3"	150 ANSI R.F.	315DC04L80			
				3"	300 ANSI R.F.	330DC04L80			
				3"	600 ANSI R.F.	360DC04L80			
				3"	600 ANSI R.T.J	360DC04L80RJ			
				3"	900 ANSI R.F.	390DC04L80			
				3"	900 ANSI R.T.J	390DC04L80RJ			
				4"	150 ANSI R.F.	415DC04L80			
				4"	300 ANSI R.F.	430DC04L80			
				4"	600 ANSI R.F.	460DC04L80			
				4"	600 ANSI R.T.J	460DC04L80RJ			
				4"	900 ANSI R.F.	490DC04L80			
				4"	900 ANSI R.T.J	490DC04L80RJ			
				6"	300 ANSI R.F.	630DC04L80			
				6"	600 ANSI R.F.	660DC04L80			
				6"	600 ANSI R.T.J	660DC04L80RJ			
				6"	900 ANSI R.F.	690DC04L80			
				6"	900 ANSI R.T.J	690DC04L80RJ			
				8"	300 ANSI R.F.	830DC04L80			
				8"	600 ANSI R.F.	860DC04L80			
				8"	600 ANSI R.T.J	860DC04L80RJ			
				10"	600 ANSI R.F.	1060DC04L80			
				10"	600 ANSI R.T.J	1060DC04L80RJ			
				12"	300 ANSI R.F.	1230DC04L80			
				12"	600 ANSI R.F.	1260DC04L80			
				12"	600 ANSI R.T.J	1260DC04L80RJ			

Canalta Dual Chamber Orifice Fitting
2" Thru 12" - 150, 300, 600, 900 ANSI Rating
Canadian Funds Parts Price List - November 1, 1999

ITEM No.	QTY	DESCRIPTION	MFG/MATERIAL	SIZE	RATING	PART No.			
			A352 LCC LOW TEMP. STEEL	6"	900 ANSI R.F.	690DC04L160			
			SCH. 160	6"	900 ANSI R.T.J	690DC04L160RJ			
				8"	900 ANSI R.F.	890DC04L160			
				8"	900 ANSI R.T.J	890DC04L160RJ			
				10"	900 ANSI R.F.	1090DC04L160			
				10"	900 ANSI R.T.J	1090DC04L160RJ			
				12"	900 ANSI R.F.	1290DC04L160			
				12"	900 ANSI R.T.J	1290DC04L160RJ			
4A*	1	BODY SEAL	NITRILE-N	2"	150LB TO 900LB	260DC04AN-258			
		(N) Sweet Service		3"	150LB TO 900LB	360DC04AN-365			
				4"	150LB TO 900LB	460DC04AN-367			
				6"	150LB TO 900LB	660DC04AN-373			
				8"	150LB TO 900LB	860DC04AN-378			
		(H) Sour Service		10"	150LB TO 900LB	1060DC04AN-380			
				12"	150LB TO 900LB	1260DC04AN-383			
			HNBR-H	2"	150LB TO 900LB	260DC04AH-265			
				3"	150LB TO 900LB	360DC04AH-365			
				4"	150LB TO 900LB	460DC04AH-367			
				6"	150LB TO 900LB	660DC04AH-373			
				8"	150LB TO 900LB	860DC04AH-378			
				10"	150LB TO 900LB	1060DC04AH-380			
				12"	150LB TO 900LB	1260DC04AH-383			
5,6,7*	1	SHAFT AND PINIONS	C.R.S. CHEMICALLY TREATED	2"	150LB TO 900LB	260DC05			
				3"	150LB TO 900LB	360DC05			
				4"	150LB TO 900LB	460DC05			
				6"	150LB TO 900LB	660DC05			
				8"	150LB TO 900LB	860DC05			
				10"	150LB TO 900LB	1060DC05			
				12"	150LB TO 900LB	1260DC05			
			316 STAINLESS STEEL	2"	150LB TO 900LB	260DC05SS			
				3"	150LB TO 900LB	360DC05SS			
				4"	150LB TO 900LB	460DC05SS			
				6"	150LB TO 900LB	660DC05SS			
				8"	150LB TO 900LB	860DC05SS			
				10"	150LB TO 900LB	1060DC05SS			
				12"	150LB TO 900LB	1260DC05SS			
*5A	1	SLIDE VALVE INDICATOR PLATE, LEFT	CAST ALUMINUM	2"-12"	150LB TO 900LB	C60DC5AL			
	1	SLIDE VALVE INDICATOR PLATE, RIGHT	CAST ALUMINUM	2"-12"	150LB TO 900LB	C60DC5AR			
*5B	1	SLIDE VALVE INDICATOR POINTER	304 STAINLESS STEEL	2"-12"	150LB TO 900LB	C60DC05B			
8	1	PLATE CARRIER	C.R.S. CHEMICALLY TREATED	2"	150LB TO 900LB	260DC08			
				3"	150LB TO 900LB	360DC08			
				4"	150LB TO 900LB	460DC08			
				6"	150LB TO 900LB	660DC08			
				8"	150LB TO 900LB	860DC08			
				10"	150LB TO 900LB	1060DC08			
				12"	150LB TO 900LB	1260DC08			
			CF8M STAINLESS STEEL	2"	150LB TO 900LB	260DC08SS			
				3"	150LB TO 900LB	360DC08SS			
				4"	150LB TO 900LB	460DC08SS			
				6"	150LB TO 900LB	660DC08SS			
				8"	150LB TO 900LB	860DC08SS			
				10"	150LB TO 900LB	1060DC08SS			
				12"	150LB TO 900LB	1260DC08SS			
8-14.3		PLATE CARRIER	C.R.S. CHEMICALLY TREATED	2"	150LB TO 900LB	260DC08-14.3			
		FOR USE WITH SEALING RING		3"	150LB TO 900LB	360DC08-14.3			
		TO MEET AGA/API 14.3 SPECIFICATIONS		4"	150LB TO 900LB	460DC08-14.3			
				6"	150LB TO 900LB	660DC08-14.3			
				8"	150LB TO 900LB	860DC08-14.3			
			CF8M STAINLESS STEEL	2"	150LB TO 900LB	260DC08SS-14.3			
				3"	150LB TO 900LB	360DC08SS-14.3			
				4"	150LB TO 900LB	460DC08SS-14.3			
				6"	150LB TO 900LB	660DC08SS-14.3			
				8"	150LB TO 900LB	860DC08SS-14.3			
8	1	ORIFICE PLATE SEALING RING	316 STAINLESS STEEL	2"	150LB TO 900LB	260DC08-40			
			SCH.40	3"	150LB TO 900LB	360DC08-40			
				4"	150LB TO 900LB	460DC08-40			
				6"	150LB TO 900LB	660DC08-40			
				8"	150LB TO 900LB	860DC08-40			
			SCH. 80	2"	150LB TO 900LB	260DC08-80			
				3"	150LB TO 900LB	360DC08-80			
				4"	150LB TO 900LB	460DC08-80			
				6"	150LB TO 900LB	660DC08-80			
				8"	150LB TO 900LB	860DC08-80			
			SCH.160	6"	150LB TO 900LB	660DC08-160			
				8"	150LB TO 900LB	860DC08-160			

Canalta Dual Chamber Orifice Fitting
2" Thru 12" - 150, 300, 600, 900 ANSI Rating
Canadian Funds Parts Price List - November 1, 1999

ITEM No.	QTY	DESCRIPTION	MFG/MATERIAL	SIZE	RATING	PART No.			
8A*	1	ORIFICE PLATE RETAINING RING	316 STAINLESS STEEL	2"	150LB TO 900LB	260DC08A-40			
			SCH.40	3"	150LB TO 900LB	360DC08A-40			
				4"	150LB TO 900LB	460DC08A-40			
				6"	150LB TO 900LB	660DC08A-40			
				8"	150LB TO 900LB	860DC08A-40			
			SCH. 80	2"	150LB TO 900LB	260DC08A-80			
				3"	150LB TO 900LB	360DC08A-80			
				4"	150LB TO 900LB	460DC08A-80			
				6"	150LB TO 900LB	660DC08A-80			
				8"	150LB TO 900LB	860DC08A-80			
			SCH.160	6"	150LB TO 900LB	660DC08A-160			
				8"	150LB TO 900LB	860DC08A-160			
8B	1	PLATE CARRIER WITH	CAST WCB ZINC PLATED	2"	150LB TO 900LB	260DC08B-40			
		BUILT IN SEAL RING	SCH.40	3"	150LB TO 900LB	360DC08B-40			
				4"	150LB TO 900LB	460DC08B-40			
				6"	150LB TO 900LB	660DC08B-40			
				8"	150LB TO 900LB	860DC08B-40			
			SCH. 80	2"	150LB TO 900LB	260DC08B-80			
				3"	150LB TO 900LB	360DC08B-80			
				4"	150LB TO 900LB	460DC08B-80			
				6"	150LB TO 900LB	660DC08B-80			
				8"	150LB TO 900LB	860DC08B-80			
			SCH.160	6"	150LB TO 900LB	660DC08B-160			
				8"	150LB TO 900LB	860DC08B-160			
8C*	1	ORIFICE PLATE INNER SEAL	NITRILE - N	2"	150LB TO 900LB	260DC08CN-035			
		(N) Sweet Service		3"	150LB TO 900LB	360DC08CN-042			
		(H) Sour Service		4"	150LB TO 900LB	460DC08CN-046			
				6"	150LB TO 900LB	660DC08CN-165			
				8"	150LB TO 900LB	860DC08CN-173			
			HNBR - H	2"	150LB TO 900LB	260DC08CH-035			
				3"	150LB TO 900LB	360DC08CH-042			
				4"	150LB TO 900LB	460DC08CH-046			
				6"	150LB TO 900LB	660DC08CH-165			
				8"	150LB TO 900LB	860DC08CH-173			
8D*	2	ORIFICE PLATE OUTER SEAL	NITRILE - N	2"	150LB TO 900LB	260DC08DN-330			
		(N) Sweet Service		3"	150LB TO 900LB	360DC08DN-338			
		(H) Sour Service		4"	150LB TO 900LB	460DC08DN-346			
				6"	150LB TO 900LB	660DC08DN-362			
				8"	150LB TO 900LB	860DC08DN-370			
			HNBR-H	2"	150LB TO 900LB	260DC08DH-330			
				3"	150LB TO 900LB	360DC08DH-338			
				4"	150LB TO 900LB	460DC08DH-346			
				6"	150LB TO 900LB	660DC08DH-362			
				8"	150LB TO 900LB	860DC08DH-370			
8E	4	SEALING RING #6 SETSCREWS (32TPI-3/16")	316 STAINLESS STEEL	2" TO 12"	150LB TO 900LB	860DC08E			
8F*	1	STANDARD SEAL RING	NITRILE - N	2"	150LB TO 900LB	260DC08FN			
		(N) Sweet Service		3"	150LB TO 900LB	360DC008FN			
		(H) Sour Service		4"	150LB TO 900LB	460DC08FN			
				6"	150LB TO 900LB	660DC08FN			
				8"	150LB TO 900LB	860DC08FN			
				10"	150LB TO 900LB	1060DC08FN			
				12"	150LB TO 900LB	1260DC08FN			
			HNBR-H	2"	150LB TO 900LB	260DC08FH			
				3"	150LB TO 900LB	360DC008FH			
				4"	150LB TO 900LB	460DC08FH			
				6"	150LB TO 900LB	660DC08FH			
				8"	150LB TO 900LB	860DC08FH			
				10"	150LB TO 900LB	1060DC08FH			
				12"	150LB TO 900LB	1260DC08FH			
			TEFLON-T	2"	150LB TO 900LB	260DC08FT			
				3"	150LB TO 900LB	360DC008FT			
				4"	150LB TO 900LB	460DC08FT			
				6"	150LB TO 900LB	660DC08FT			
				8"	150LB TO 900LB	860DC08FT			
				10"	150LB TO 900LB	1060DC08FT			
				12"	150LB TO 900LB	1260DC08FT			
9	1	SEALING BAR	C.R.S. ZINC PLATED	2"	150LB TO 900LB	260DC09			
				3"	150LB TO 900LB	360DC09			
				4"	150LB TO 900LB	460DC09			
				6"	150LB TO 900LB	660DC09			
				8"	150LB TO 900LB	860DC09			
				10"	150LB TO 900LB	1060DC09			
				12"	150LB TO 900LB	1260DC09			
9G	1	SEALING BAR WITH	C.R.S. ZINC PLATED	2"	150LB TO 900LB	260DC09G			
		O-RING GROOVE		3"	150LB TO 900LB	360DC09G			
				4"	150LB TO 900LB	460DC09G			
				6"	150LB TO 900LB	660DC09G			
				8"	150LB TO 900LB	860DC09G			
				10"	150LB TO 900LB	1060DC09G			
				12"	150LB TO 900LB	1260DC09G			

Canalta Dual Chamber Orifice Fitting
2" Thru 12" - 150, 300, 600, 900 ANSI Rating
Canadian Funds Parts Price List - November 1, 1999

ITEM No.	QTY	DESCRIPTION	MFG/MATERIAL	SIZE	RATING	PART No.			
9A*	1	SEALING BAR GASKET	GRAPHITE COMPRESSED	2"	150LB TO 900LB	260DC09A			
				3"	150LB TO 900LB	360DC09A			
				4"	150LB TO 900LB	460DC09A			
				6"	150LB TO 900LB	660DC09A			
				8"	150LB TO 900LB	860DC09A			
				10"	150LB TO 900LB	1060DC09A			
				12"	150LB TO 900LB	1260DC09A			
9B*	1	SEALING BAR O-RING	NITRILE - N	2"	150LB TO 900LB	260DC09BN-238			
		(N) Sweet Service		3"	150LB TO 900LB	360DC09BN-247			
		(H) Sour Service		4"	150LB TO 900LB	460DC09BN-250			
				6"	150LB TO 900LB	660DC09BN-261			
				8"	150LB TO 900LB	860DC09BN-265			
				10"	150LB TO 900LB	1060DC09BN-271			
				12"	150LB TO 900LB	1260DC09BN-274			
			HNBR - H	2"	150LB TO 900LB	260DC09BH-238			
				3"	150LB TO 900LB	360DC09BH-247			
				4"	150LB TO 900LB	460DC09BH-250			
				6"	150LB TO 900LB	660DC09BH-261			
				8"	150LB TO 900LB	860DC09BH-265			
				10"	150LB TO 900LB	1060DC09BH-271			
				12"	150LB TO 900LB	1260DC09BH-274			
* 10*	1	BLEEDER VALVE ASSEMBLY	C.R.S. ZINC PLATED	2" TO 12"	150LB TO 900LB	C60DC10			
* 10C	1	BLEEDER VALVE BODY	C.R.S. ZINC PLATED	2" TO 12"	150LB TO 900LB	C60DC10C			
* 10D	1	BLEEDER VALVE NEEDLE	316 STAINLESS STEEL	2" TO 12"	150LB TO 900LB	C60DC10D			
* 10E	1	BLEEDER VALVE "O" RING	HNBR	2" TO 12"	150LB TO 900LB	C60DC10EN-012			
* 10G	1	SETSCREW	316 STAINLESS STEEL	2" TO 12"	150LB TO 900LB	C60DC10G			
*11	4	CLAMPING BAR SCREWS	4140 ZINC PLATED	2"& 3"	150LB TO 900LB	C60DC11			
	5			4"	150LB TO 900LB	C60DC11			
	6			6"	150LB TO 900LB	C60DC11			
	7			8"	150LB TO 900LB	C60DC11			
	8			10"	150LB TO 900LB	C60DC11			
	10			12"	150LB TO 900LB	C60DC11			
12	1	CLAMPING BAR	C.R.S. ZINC PLATED	2"	150LB TO 900LB	260DC12			
				3"	150LB TO 900LB	360DC12			
				4"	150LB TO 900LB	460DC12			
				6"	150LB TO 900LB	660DC12			
				8"	150LB TO 900LB	860DC12			
				10"	150LB TO 900LB	1060DC12			
				12"	150LB TO 900LB	1260DC12			
13*	1	ORIFICE PLATE	304 STAINLESS STEEL	2"	150LB TO900LB	260DC13S			
		(Specify Bore)	1/8" Thick	3"	150LB TO 900LB	360DC13S			
				4"	150LB TO 900LB	460DC13S			
				6"	150LB TO 900LB	660DC13S			
				8"	150LB TO 900LB	860DC13S			
				10"	150LB TO 900LB	1060DC13S			
				12"	150LB TO 900LB	1260DC13S			
			316 STAINLESS STEEL	2"	150LB TO 900LB	260DC13SS			
			1/8" Thick	3"	150LB TO 900LB	360DC13SS			
				4"	150LB TO 900LB	460DC13SS			
				6"	150LB TO 900LB	660DC13SS			
				8"	150LB TO 900LB	860DC13SS			
				10"	150LB TO 900LB	1060DC13SS			
				12"	150LB TO 900LB	1260DC13SS			
			304 STAINLESS STEEL	8"	150LB TO 900LB	860DC13S-1/4			
			1/4" Thick	10"	150LB TO 900LB	1060DC13S-1/4			
				12"	150LB TO 900LB	1260DC13S-1/4			
			316 STAINLESS STEEL	8"	150LB TO 900LB	860DC13SS-1/4			
			1/4" Thick	10"	150LB TO 900LB	1060DC13SS-1/4			
				12"	150LB TO 900LB	1260DC13SS-1/4			
13A	1	ORIFICE PLATE BOXES	WOOD	2"		260DC13A			
				3"		360DC13A			
				4"		460DC13A			
14	1	TOP HOUSING	A216 WCB STEEL	2"	150LB TO 900LB	260DC14W			
				3"	150LB TO 900LB	360DC14W			
				4"	150LB TO 900LB	460DC14W			
				6"	150LB TO 900LB	660DC14W			
				8"	150LB TO 900LB	860DC14W			
				10"	150LB TO 900LB	1060DC14W			
				12"	150LB TO 900LB	1260DC14W			
			A352 LCC LOW TEMP. STEEL	2"	150LB TO 900LB	260DC14L			
				3"	150LB TO 900LB	360DC14L			
				4"	150LB TO 900LB	460DC14L			
				6"	150LB TO 900LB	660DC14L			
				8"	150LB TO 900LB	860DC14L			
				10"	150LB TO 900LB	1060DC14L			
				12"	150LB TO 900LB	1260DC14L			
* 15*	4	VALVE SPRINGS	316 STAINLESS STEEL	2"	150LB TO 900LB	C60DC15			
	4			3"	150LB TO 900LB	C60DC15			
	5			4"	150LB TO 900LB	C60DC15			
	5			6"	150LB TO 900LB	C60DC15			
	6			8"	150LB TO 900LB	C60DC15			
	6			10"	150LB TO 900LB	C60DC15			
	8			12"	150LB TO 900LB	C60DC15			
16	2	VALVE CARRIER GUIDES-SET	316 STAINLESS STEEL	2" TO 12"	150LB TO 900LB	C60DC16			

Canalta Dual Chamber Orifice Fitting
2" Thru 12" - 150, 300, 600, 900 ANSI Rating
Canadian Funds Parts Price List - November 1, 1999

ITEM No.	QTY	DESCRIPTION	MFG/MATERIAL	SIZE	RATING	PART No.			
17	1	VALVE CARRIER	CAST WCB ZINC PLATED	2"	150LB TO 900LB	260DC17			
				3"	150LB TO 900LB	360DC17			
				4"	150LB TO 900LB	460DC17			
				6"	150LB TO 900LB	660DC17			
				8"	150LB TO 900LB	860DC17			
				10"	150LB TO 900LB	1060DC17			
				12"	150LB TO 900LB	1260DC17			
			CF8M STAINLESS STEEL	2"	150LB TO 900LB	260DC17SS			
				3"	150LB TO 900LB	360DC17SS			
				4"	150LB TO 900LB	460DC17SS			
				6"	150LB TO 900LB	660DC17SS			
				8"	150LB TO 900LB	860DC17SS			
				10"	150LB TO 900LB	1060DC17SS			
				12"	150LB TO 900LB	1260DC17SS			
*17A	2	VALVE CARRIER STOP PINS	316 STAINLESS STEEL	2" TO 12"	150LB TO 900LB	C60DC17A			
18*	1	VALVE SEAT	C.R.S.	2"	150LB TO 900LB	260DC18			
				3"	150LB TO 900LB	360DC18			
				4"	150LB TO 900LB	460DC18			
				6"	150LB TO 900LB	660DC18			
				8"	150LB TO 900LB	860DC18			
				10"	150LB TO 900LB	1060DC18			
				12"	150LB TO 900LB	1260DC18			
			316 STAINLESS STEEL	2"	150LB TO 900LB	260DC18SS			
				3"	150LB TO 900LB	360DC18SS			
				4"	150LB TO 900LB	460DC18SS			
				6"	150LB TO 900LB	660DC18SS			
				8"	150LB TO 900LB	860DC18SS			
				10"	150LB TO 900LB	1060DC18SS			
				12"	150LB TO 900LB	1260DC18SS			
18A*	1	VALVE SEAT WITH O-RING	C.R.S.	2"	150LB TO 900LB	260DC18A			
				3"	150LB TO 900LB	360DC18A			
				4"	150LB TO 900LB	460DC18A			
				6"	150LB TO 900LB	660DC18A			
				8"	150LB TO 900LB	860DC18A			
				10"	150LB TO 900LB	1060DC18A			
				12"	150LB TO 900LB	1260DC18A			
			316 STAINLESS STEEL	2"	150LB TO 900LB	260DC18ASS			
				3"	150LB TO 900LB	360DC18ASS			
				4"	150LB TO 900LB	460DC18ASS			
				6"	150LB TO 900LB	660DC18ASS			
				8"	150LB TO 900LB	860DC18ASS			
				10"	150LB TO 900LB	1060DC18ASS			
				12"	150LB TO 900LB	1260DC18ASS			
18B*	1	VALVE SEAT WITH O-RING AND SOFT SEAT	C.R.S.	2"	150LB TO 900LB	260DC18B			
				3"	150LB TO 900LB	360DC18B			
				4"	150LB TO 900LB	460DC18B			
				6"	150LB TO 900LB	660DC18B			
				8"	150LB TO 900LB	860DC18B			
				10"	150LB TO 900LB	1060DC18B			
				12"	150LB TO 900LB	1260DC18B			
			316 STAINLESS STEEL	2"	150LB TO 900LB	260DC18BSS			
				3"	150LB TO 900LB	360DC18BSS			
				4"	150LB TO 900LB	460DC18BSS			
				6"	150LB TO 900LB	660DC18BSS			
				8"	150LB TO 900LB	860DC18BSS			
				10"	150LB TO 900LB	1060DC18BSS			
				12"	150LB TO 900LB	1260DC18BSS			
18C*	1	VALVE SEAT TOP GASKET	GRAPHITE COMPRESSED	2"	150LB TO 900LB	260DC18C			
				3"	150LB TO 900LB	360DC18C			
				4"	150LB TO 900LB	460DC18C			
				6"	150LB TO 900LB	660DC18C			
				8"	150LB TO 900LB	860DC18C			
				10"	150LB TO 900LB	1060DC18C			
				12"	150LB TO 900LB	1260DC18C			
18D*	8	VALVE SEAT SCREWS	316 STAINLESS STEEL	2"	150LB TO 900LB	C60DC18D			
	10			3"	150LB TO 900LB	C60DC18D			
	11			4"	150LB TO 900LB	C60DC18D			
	14			6"	150LB TO 900LB	C60DC18D			
	16			8"	150LB TO 900LB	C60DC18D			
	18			10"	150LB TO 900LB	C60DC18D			
	20			12"	150LB TO 900LB	C60DC18D			

Canalta Dual Chamber Orifice Fitting
2" Thru 12" - 150, 300, 600, 900 ANSI Rating
Canadian Funds Parts Price List - November 1, 1999

ITEM No.	QTY	DESCRIPTION	MFG/MATERIAL	SIZE	RATING	PART No.			
18E*	1	VALVE SEAT BOTTOM SEAL	NITRILE - N	2"	150LB TO 900LB	260DC18EN-152			
		(N) Sweet Service		3"	150LB TO 900LB	360DC18EN-155			
		(H) Sour Service		4"	150LB TO 900LB	460DC18EN-158			
				6"	150LB TO 900LB	660DC18EN-163			
				8"	150LB TO 900LB	860DC18EN-169			
				10"	150LB TO 900LB	1060DC18EN-173			
				12"	150LB TO 900LB	1260DC18EN-177			
			HNBR - H	2"	150LB TO 900LB	260DC18EH-152			
				3"	150LB TO 900LB	360DC18EH-155			
				4"	150LB TO 900LB	460DC18EH158			
				6"	150LB TO 900LB	660DC18EN-163			
				8"	150LB TO 900LB	860DC18EH0-169			
				10"	150LB TO 900LB	1060DC18EH-173			
				12"	150LB TO 900LB	1260DC18EH-177			
18F*	1	VALVE SEAT TOP SOFT SEAL	NITRILE - N	2"	150LB TO 900LB	260DC18FN-236			
		(N) Sweet Service		3"	150LB TO 900LB	360DC18FN-243			
		(H) Sour Service		4"	150LB TO 900LB	460DC18FN-248			
				6"	150LB TO 900LB	660DC18FN-258			
				8"	150LB TO 900LB	860DC18FN-263			
				10"	150LB TO 900LB	1060DC18FN-271			
				12"	150LB TO 900LB	1260DC18FN-275			
			HNBR - H	2"	150LB TO 900LB	260DC18FH-236			
				3"	150LB TO 900LB	360DC18FH-243			
				4"	150LB TO 900LB	460DC18FH-248			
				6"	150LB TO 900LB	660DC18FH-258			
				8"	150LB TO 900LB	860DC18FH-263			
				10"	150LB TO 900LB	1060DC18FH-271			
				12"	150LB TO 900LB	1260DC18FH-275			
18G	1	VALVE SEAT GREASE PORT SEAL	NITRILE-N	2-12"	150LB TO 900LB	C60DC18GN-008			
		(N) SWEET SERVICE, (H) SOUR SERVICE	HNBR-H	2-12"	150LB TO 900LB	C60DC18GH-008			
*19,22	1	BEARING PLUG	C.R.S. ZINC PLATED	2" TO 12"	150LB TO 900LB	C60DC19			
* 20,21	1	STUFFING BOX	C.R.S. ZINC PLATED	2" TO 12"	150LB TO 900LB	C60DC20			
* 22A*	6	PLUG & STUFFING BOX GASKETS	316 STAINLESS STEEL	2" TO 12"	150LB TO 900LB	C60DC22			
* 23*	1	GREASE GUN ASSEMBLY	C.R.S. ZINC PLATED	2" TO 12"	150LB TO 900LB	C60DC23			
*23A	1	GREASE GUN STEM	316 STAINLESS STEEL	2" TO 12"	150LB TO 900LB	C60DC23A			
*23B	1	GREASE GUN BODY	C.R.S. ZINC PLATED	2" TO 12"	150LB TO 900LB	C60DC23B			
* 24*	1	GREASE SEAL BALL CHECK VALVE	316 STAINLESS STEEL	2" TO 12"	150LB TO 900LB	C60DC24			
* 25	3	PACKING NUTS	C.R.S. ZINC PLATED	2" TO 12"	150LB TO 900LB	C60DC25			
* 25A	6	PACKING - 5/8" SLEEVE	TEFLON	2" TO 12"	150LB TO 900LB	C60DC25A			
*25B	6	PACKING - 1 1/4" SLEEVE	TEFLON	2" TO 12"	150LB TO 900LB	C60DC25B			
* 25C	A/R	PACKING - 1/8" SLEEVE	TEFLON	2" TO 12"	150LB TO 900LB	C60DC25C			
*25D	A/R	PACKING - 1/4" SLEEVE	TEFLON	2" TO 12"	150LB TO 900LB	C60DC25D			
* 25E	A/R	PACKING - 3/8" SLEEVE	TEFLON	2" TO 12"	150LB TO 900LB	C60DC25E			
*25F	A/R	PACKING - 1/2" SLEEVE	TEFLON	2" TO 12"	150LB TO 900LB	C60DC25F			
25S*	1	COMPLETE PACKING SET	TEFLON	2"	150LB TO 900LB	C60DC25S2			
				3"	150LB TO 900LB	C60DC25S3			
				4"	150LB TO 900LB	C60DC25S4			
				6"	150LB TO 900LB	C60DC25S6			
				8"	150LB TO 900LB	C60DC25S8			
				10"	150LB TO 900LB	C60DC25S10			
				12"	150LB TO 900LB	C60DC25S12			
* 26*	3	STUFFING BOX GLANDS	316 STAINLESS STEEL	2" TO 12"	150LB TO 900LB	C60DC26			
* 28A*	3	BUSHING RETAINER	316 STAINLESS STEEL	2" TO 12"	150LB TO 900LB	C60DC28A			
* 30	2	DRAIN PLUGS	C.R.S. ZINC PLATED	2" TO 12"	150LB TO 900LB	C60DC30			
* 31	4	METER TAPS PLUGS	C.R.S. ZINC PLATED	2" TO 12"	150LB TO 900LB	C60DC31			
* 32	14	HEX NUTS	2H	2"	150LB TO 900LB	C60DC32-5/8			
	15		2H	3"	150LB TO 900LB	C60DC32-5/8			
	15		2H	4"	150LB TO 900LB	C60DC32-3/4			
	18		2H	6"	150LB TO 900LB	C60DC32-3/4			
	19		2H	8"	150LB TO 900LB	C60DC32-3/4			
	22		2H	10"	150LB TO 900LB	C60DC32-3/4			
	22		2H	12"	150LB TO 900LB	C60DC32-3/4			
	14		2HM	2"	150LB TO 900LB	C60DC32S-5/8			
	15		2HM	3"	150LB TO 900LB	C60DC32S-5/8			
	15		2HM	4"	150LB TO 900LB	C60DC32S-3/4			
	18		2HM	6"	150LB TO 900LB	C60DC32S-3/4			
	19		2HM	8"	150LB TO 900LB	C60DC32S-3/4			
	22		2HM	10"	150LB TO 900LB	C60DC32S-3/4			
	22		2HM	12"	150LB TO 900LB	C60DC32S-3/4			

Canalta Dual Chamber Orifice Fitting
2" Thru 12" - 150, 300, 600, 900 ANSI Rating
Canadian Funds Parts Price List - November 1, 1999

ITEM No.	QTY	DESCRIPTION	MFG/MATERIAL	SIZE	RATING	PART No.			
* 33	11	STUDS	B7	2"	150LB TO 900LB	C60DC33-2			
	3		B7	2"	150LB TO 900LB	C60DC33-2 13/16			
	14		B7	3"	150LB TO 900LB	C60DC33-2			
	1		B7	3"	150LB TO 900LB	C60DC33-2 13/16			
	14		B7	4"	150LB TO 900LB	C60DC33-2 5/16			
	1		B7	4"	150LB TO 900LB	C60DC33-3 1/4			
	15		B7	6"	150LB TO 900LB	C60DC33-2 3/4			
	3		B7	6"	150LB TO 900LB	C60DC33- 3 1/4			
	19		B7	8"	150LB TO 900LB	C60DC33-3 1/4			
	22		B7	10"	150LB TO 900LB	C60DC33-3 1/4			
	22		B7	12"	150LB TO 900LB	C60DC33-3 3/8			
	11		B7M	2"	150LB TO 900LB	C60DC33S-2			
	3		B7M	2"	150LB TO 900LB	C60DC33S-2 13/16			
	14		B7M	3"	150LB TO 900LB	C60DC33S-2			
	1		B7M	3"	150LB TO 900LB	C60DC33S-2 13/16			
	14		B7M	4"	150LB TO 900LB	C60DC33S-2 5/16			
	1		B7M	4"	150LB TO 900LB	C60DC33S-3 1/4			
	15		B7M	6"	150LB TO 900LB	C60DC33S-2 3/4			
	3		B7M	6"	150LB TO 900LB	C60DC33S- 3 1/4			
	19		B7M	8"	150LB TO 900LB	C60DC33S-3 1/4			
	22		B7M	10"	150LB TO 900LB	C60DC33S-3 1/4			
	22		B7M	12"	150LB TO 900LB	C60DC33S-3 3/8			
* 34	1	SPECIFICATION PLATE-FITTING	316 STAINLESS STEEL	2" TO 12"	150LB TO 900LB	C60DC34			
* 35	1	SPECIFICATION PLATE-METER RUN	316 STAINLESS STEEL	2" TO 12"	150LB TO 900LB	C60DC35			
*36	1	OPERATING INSTRUCTION PLATE	316 STAINLESS STEEL	2" TO 12"	150LB TO 900LB	C60DC34			
*37	1	SOFT SEAT WARNING PLATE	316 STAINLESS STEEL	2" TO 12"	150LB TO 900LB	C60DC35			
* 38*	1	VALVE SEAT GREASE (1 BOX)		2" TO 12"	150LB TO 900LB	C60DC36			

Note: *Prefix Asterix Signifies parts which are common to all sizes
Suffix Asterix* Signifies recommended spare part

Reference Manual
00809-0100-4803, Rev DA
April 2013

Rosemount 3051S MultiVariable™ Transmitter



ROSEMOUNT®

EMERSON™
Process Management

Rosemount 3051S MultiVariable Transmitter

⚠ WARNING

Read this manual before working with the product. For personal and system safety, and for optimum product performance, make sure the contents are fully understood installing, using, or maintaining this product.

For technical assistance, contacts are listed below:

Customer Central
Technical support, quoting, and order-related questions.

United States - 1-800-999-9307 (7:00 am to 7:00 pm CST)

Asia Pacific- 65 777 8211

Europe/ Middle East/ Africa - 49 (8153) 9390

North American Response Center
Equipment service needs.

1-800-654-7768 (24 hours—includes Canada)

Outside of these areas, contact your local Emerson Process Management representative.

⚠ CAUTION

The products described in this document are NOT designed for nuclear-qualified applications. Using non-nuclear qualified products in applications that require nuclear-qualified hardware or products may cause inaccurate readings.

For information on Rosemount nuclear-qualified products, contact your local Emerson Process Management Sales Representative.

.

Contents

Section 1: Introduction

1.1 Using this manual 1
1.2 Models covered 2
1.3 Service support 2

Section 2: Installation

2.1 Overview 9
2.2 Safety messages 9
2.2.1 Warnings 10
2.3 Installation considerations 11
2.3.1 General 11
2.3.2 Mechanical 11
2.3.3 Environmental 11
2.4 Installation procedures 11
2.4.1 Configure security and alarm 11
2.4.2 Mounting considerations 12
2.4.3 Mount the transmitter 15
2.4.4 Process connections 18
2.4.5 Connect wiring and power up 21
2.4.6 Conduit electrical connector wiring (option GE or GM) 25
2.4.7 Grounding 25
2.5 Rosemount 305 and 304 Manifolds 27
2.5.1 Rosemount 305 Integral Manifold installation procedure 27
2.5.2 Rosemount 304 Conventional Manifold installation procedure 28
2.5.3 Manifold operation to zero the differential pressure sensor 28

Section 3: Configuration

3.1 Overview 9
3.2 Safety messages 10
3.2.1 Warnings 10
3.3 Engineering assistant installation 11
3.3.1 Engineering assistant version 6.1 or later 11
3.3.2 Installation and initial setup 11

3.4 Flow configuration 13
3.4.1 3051SMV engineering assistant 6.1 or later 13
3.4.2 Basic navigation overview 14
3.4.3 Launching engineering assistant 15
3.4.4 Preferences 16
3.4.5 Fluid selection for database liquid/gas 17
3.4.6 Fluid properties 20
3.4.7 Primary element selection 21
3.4.8 Save / send 23
3.4.9 Other fluid configurations 26
3.5 Basic device configuration 31
3.6 Detailed device configuration 34
3.6.1 Model identification 34
3.6.2 Alarm and saturation 34
3.6.3 Variable mapping 36
3.6.4 LCD display 37
3.6.5 Communication setup 38
3.6.6 Materials of construction 41
3.6.7 Flow configuration parameters 42
3.7 Variable configuration 43
3.7.1 Flow rate 43
3.7.2 Energy rate 49
3.7.3 Totalizer 55
3.7.4 Differential pressure 58
3.7.5 Static pressure 59
3.7.6 Process temperature 60
3.7.7 Module temperature 61
3.7.8 Analog output 62
3.8 Menu trees and 475 fast keys 64
3.8.1 Menu tree for fully compensated mass and energy flow (page 1) 65
3.8.2 Menu tree for fully compensated mass and energy flow (page 2) 66
3.8.3 Menu tree for direct process variable output (page 1) 67
3.8.4 Menu tree for direct process variable output (page 2) 68
3.8.5 475 Fast keys 69

Section 4: Operation and Maintenance

4.1 Overview 9
4.2 Safety messages 10

4.2.1 Warnings 10
4.3 Transmitter calibration 11
4.3.1 Calibration overview 11
4.3.2 Sensor trim overview 12
4.3.3 Differential pressure sensor calibration 13
4.3.4 Static pressure sensor calibration 14
4.3.5 Process temperature sensor calibration 16
4.3.6 Analog calibration. 18
4.4 Transmitter functional tests. 20
4.4.1 Flow/energy calculation verification (Test calculation) 20
4.4.2 Configuring fixed process variables. 21
4.4.3 Analog output loop test. 21
4.5 Process variables 21
4.5.1 Process variable tabs 21
4.5.2 All variables tab 22
4.6 Field upgrades and replacements 23
4.6.1 Disassembly considerations 23
4.6.2 Housing assembly including feature board electronics. 23
4.6.3 Terminal block. 26
4.6.4 LCD display. 27
4.6.5 Flange and drain vent. 27
4.6.6 SuperModule assembly 29

Section 5: Troubleshooting

5.1 Overview 9
5.2 Device diagnostics 9
5.2.1 HART host diagnostics 9
5.2.2 LCD display diagnostics 9
5.3 Measurement quality and limit status 13
5.4 Engineering assistant communication troubleshooting. 14
5.5 Measurement troubleshooting 15

Appendix A: Specifications and Reference Data

A.1 Specifications 9
A.1.1 Performance Specifications 9

A.1.2 Functional specifications 15
A.1.3 Physical specifications 20
A.2 Dimensional drawings 23
A.3 Ordering information 27
A.3.1 Rosemount 3051S MultiVariable transmitter 27
A.3.2 Rosemount 300SMV Housing Kit 33
A.4 Accessories 35
A.4.1 Rosemount Engineering Assistant (EA) sSoftware packages 35
A.5 Exploded view diagram 36
A.6 Spare Parts 37

Appendix B: Product Certifications

B.1.1. Approved manufacturing locations 9
B.2.1. Ordinary location certification for FM 9
B.3.1 European directive information 9
B.4.1 Hazardous Locations Certifications 10
B.5 Installation drawings 15
B.5.1 Factory Mutual (FM) 15
B.5.2 Canadian Standards Association (CSA) 20
B.5.3 GE / GM option NEMA 4X 25

Section 1 Introduction

Using this manual . . . . . page 1
Service support . . . . . page 2

1.1 Using this manual

The sections in this manual provide information on installing, operating, and maintaining the Rosemount 3051S MultiVariable Transmitter. The sections are organized as follows:

- Section 2: Installation contains mechanical and electrical installation instructions.
- Section 3: Configuration provides instruction on commissioning and operating 3051S MultiVariable Transmitters. Information on software functions, configuration parameters, and online variables is also included.
- Section 4: Operation and Maintenance contains operation and maintenance techniques.
- Section 5: Troubleshooting provides troubleshooting techniques for the most common operating problems.
- Section A: Specifications and Reference Data supplies reference and specification data, as well as ordering information.
- Section B: Product Certifications contains intrinsic safety approval information, European ATEX directive information, and approval drawings.

1.2 Models covered

The following 3051S MultiVariable Transmitters are covered in this manual.

Rosemount 3051S MultiVariable measurement with fully compensated mass and energy flow output

Measurement type	MultiVariable Type - M
1	Differential Pressure, Static Pressure, Temperature
2	Differential Pressure and Static Pressure
3	Differential Pressure and Temperature
4	Differential Pressure

Rosemount 3051S MultiVariable measurement with direct process variable output

Measurement type	MultiVariable Type - P
1	Differential Pressure, Static Pressure, Temperature
2	Differential Pressure and Static Pressure
3	Differential Pressure and Temperature

1.3 Service support

To expedite the return process outside of the United States, contact the nearest Emerson Process Management representative.

Within the United States, call the Emerson Process Management Instrument and Valves Response Center using the 1-800-654-RSMT (7768) toll-free number. This center, available 24 hours a day, will assist with any needed information or materials.

The center will ask for product model and serial numbers, and will provide a Return Material Authorization (RMA) number. The center will also ask for the process material to which the product was last exposed.

⚠ CAUTION

Individuals who handle products exposed to a hazardous substance can avoid injury if they are informed of and understand the hazard. If the product being returned was exposed to a hazardous substance as defined by OSHA, a copy of the required Material Safety Data Sheet (MSDS) for each hazardous substance identified must be included with the returned goods.

Emerson Process Management Instrument and Valves Response Center representatives will explain the additional information and procedures necessary to return goods exposed to hazardous substances.

Section 2 Installation

Overview . . . . . page 9
Safety messages . . . . . page 9
Installation considerations . . . . . page 11
Installation procedures . . . . . page 11
Rosemount 305 and 304 Manifolds . . . . . page 27

2.1 Overview

This section contains information that covers installation considerations for 3051S MultiVariable transmitter. A Quick Installation Guide (document number 00825-0100-4803) is shipped with every transmitter to describe basic installation, wiring, configuration, and startup procedures. Dimensional drawings for each Rosemount 3051S MultiVariable transmitter type and mounting configuration are included in "Specifications and Reference Data" on page 9.

2.2 Safety messages

Procedures and instructions in this section may require special precautions to ensure the safety of the personnel performing the operation. Information that raises potential safety issues is indicated with a warning symbol (⚠). Refer to the following safety messages before performing an operation preceded by this symbol.

2.2.1 Warnings

⚠ WARNING

Failure to follow these installation guidelines could result in death or serious injury:

- Make sure only qualified personnel perform the installation.

Explosions could result in death or serious injury:

- Do not remove the transmitter cover in explosive atmospheres when the circuit is live.
- Before connecting a 375 Field Communicator in an explosive atmosphere, make sure the instruments in the loop are installed in accordance with intrinsically safe or non-incendive field wiring practices.
- Both transmitter covers must be fully engaged to meet flameproof/explosion-proof requirements.
- Verify that the operating atmosphere of the transmitter is consistent with the appropriate hazardous locations certifications.

Electrical shock could cause death or serious injury. If the sensor is installed in a high-voltage environment and a fault or installation error occurs, high voltage may be present on the transmitter leads and terminals:

- Use extreme caution when making contact with the leads and terminals.

Process leaks could result in death or serious injury.

- Install and tighten all four flange bolts before applying pressure.
- Do not attempt to loosen or remove flange bolts while the transmitter is in service.
- Replacement equipment or spare parts not approved by Emerson Process Management for use as spare parts could reduce the pressure retaining capabilities of the transmitter and may render the instrument dangerous.
- Use only bolts supplied or sold by Emerson Process Management as spare parts.

Improper assembly of manifolds to traditional flange can damage the device.

- For safe assembly of manifold to traditional flange, bolts must break back plane of flange web (i.e., bolt hole) but must not contact the sensor module.

Improper installation or repair of the SuperModule™ assembly with high pressure option (P0) could result in death or serious injury.

- For safe assembly, the high pressure SuperModule assembly must be installed with ASTM A193 Class 2 Grade B8M Bolts and either a 305 manifold or a DIN-compliant traditional flange.

Static electricity can damage sensitive components.

Observe safe handling precautions for static-sensitive components.

2.3 Installation considerations

2.3.1 General

Measurement performance depends upon proper installation of the transmitter, impulse piping, and process temperature sensor. Mount the transmitter close to the process and use minimum piping to achieve best performance. Also, consider the need for easy access, personnel safety, practical field calibration, and a suitable transmitter environment. Install the transmitter to minimize vibration, shock, and temperature fluctuation.

Note
Install the enclosed pipe plug (found in the box) in the unused conduit opening if optional process temperature input is not used. For proper straight and tapered thread engagement requirements, see the appropriate approvals drawings in "Product Certifications" on page 1.

For material compatibility considerations, see technical note 00816-0100-3045 on www.rosemount.com.

2.3.2 Mechanical

For steam service or for applications with process temperatures greater than the limits of the transmitter, do not blow down impulse piping through the transmitter. Flush lines with the blocking valves closed and refill lines with water before resuming measurement.

When the transmitter is mounted on its side, position the Coplanar flange to ensure proper venting or draining. Mount the flange as shown in Figure 2-5 on page 17, keeping drain/vent connections on the bottom for gas service and on the top for liquid service.

2.3.3 Environmental

Access requirements and "Cover installation" on page 2-13 can help optimize transmitter performance. Mount the transmitter to minimize ambient temperature changes, vibration, mechanical shock, and to avoid external contact with corrosive materials. "Specifications and Reference Data" on page 9 lists temperature operating limits.

2.4 Installation procedures

2.4.1 Configure security and alarm

Configure security (Write protect)

Changes to the transmitter configuration data can be prevented with the security (write protect) switch located on the feature board. See 2-1 for the location of the switch. Position the switch in the "ON" position to prevent accidental or deliberate change of configuration data.

If the transmitter write protection switch is in the “ON” position, the transmitter will not accept any “writes” to its memory. Configuration changes, such as digital trim and reranging, cannot take place when the transmitter security is on.

To reposition the switches, follow the procedure described below:

⚠ 1. Do not remove the transmitter covers in explosive atmospheres when the circuit is live. If the transmitter is live, set the loop to manual and remove power.

2. Remove the housing cover opposite the field terminal side of the housing.

3. To reposition the switches as desired, slide the security and alarm switches into the preferred position by using a small screwdriver. See 2-1.

Figure 2-1. Switch configuration

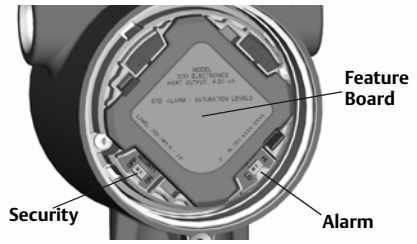

4. Re-install the transmitter cover. Transmitter covers must be fully engaged so that metal contacts metal in order to meet flameproof/explosion-proof requirements.

Configure alarm direction

The transmitter alarm direction is set by repositioning the alarm switch. Position the switch in the HI position for fail high and in the LO position for fail low. See “Alarm and Saturation” on page 2-26 for more information on alarm and saturation levels.

2.4.2 Mounting considerations

For dimensional drawing information refer to “Specifications and Reference Data” on page 2-9.

Housing rotation

The housing can be rotated to improve field access to wiring or to better view the optional LCD display. To rotate the housing, perform the following procedure:

1. Loosen the housing rotation set screw.

2. Turn the housing up to 180 degrees to the left or right of its original (as shipped) position.

Note
Do not rotate the housing more than 180 degrees without first performing a disassembly procedure (see "Housing Assembly including Feature Board Electronics" on page 2-16). Over-rotation may sever the electrical connection between the sensor module and the feature board.

3. Retighten the housing rotation set screw.

Figure 2-2. Housing

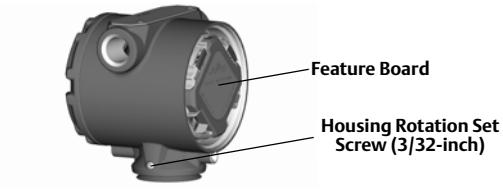

LCD display rotation

In addition to housing rotation, the optional LCD display can be rotated in 90° increments by squeezing the two tabs, pulling out, rotating and snapping back into place.

Note
If LCD pins are inadvertently removed from the feature board, re-insert the pins before snapping the LCD display back into place.

Field terminal side of housing

Mount the transmitter so the terminal side is accessible. Clearance of 0.75 in. (19 mm) is required for cover removal. Use a conduit plug in the unused conduit opening if the optional Process Temperature Input is not installed.

Feature board side of housing

Provide 0.75-in. (19 mm) of clearance for units without an LCD display. Three inches of clearance is required for cover removal if an LCD display is installed.

Cover installation

Always ensure a proper seal by installing the housing covers so that metal contacts metal in order to prevent performance degradation due to environmental effects. For replacement cover o-rings, use Rosemount o-rings (part number 03151-9040-0001).

Conduit entry threads

For NEMA 4X, IP66, and IP68 requirements, use thread seal (PTFE) tape or paste on male threads to provide a watertight seal.

Cover jam screw

For transmitter housings shipped with a cover jam screw, as shown in 2-3, the screw should be properly installed once the transmitter has been wired and powered up. The cover jam screw is intended to prevent the removal of the transmitter cover in flameproof environments without the use of tools. Follow these steps to install the cover jam screw:

1. Verify that the cover jam screw is completely threaded into the housing.
2. Install the transmitter housing covers and verify that metal contacts metal in order to meet flameproof/explosion-proof requirements.
3. Using an M4 hex wrench, turn the jam screw counterclockwise until it contacts the transmitter cover.
4. Turn the jam screw an additional $^1/_2$ turn counterclockwise to secure the cover. Application of excessive torque may strip the threads.
5. Verify that the covers cannot be removed.

Figure 2-3. Cover jam screw

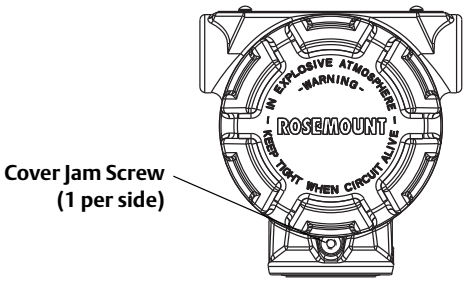

Process flange orientation

⚠ Mount the process flanges with sufficient clearance for process connections. For safety reasons, place the drain/vent valves so the process fluid is directed away from possible human contact when the vents are used. In addition, consider the need for a testing or calibration input.

2.4.3 Mount the transmitter

Figure 2-4 illustrates a typical 3051S MultiVariable transmitter installation site measuring dry gas with an orifice plate.

Figure 2-4. Typical 3051S MultiVariable installation site

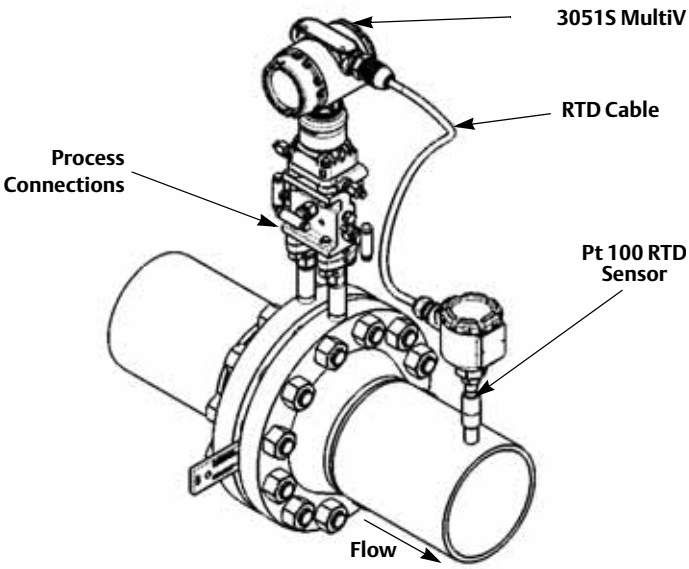

Mounting brackets

The 3051S MultiVariable transmitter can be mounted to a 2-in. pipe or to a panel using an optional mounting bracket. The B4 Bracket (SST) option is for use with the Coplanar flange process connection. "Coplanar Flange Mounting Configurations" on page 2-24 shows bracket dimensions and mounting configurations for the B4 option. Other bracket options are listed in Table 2-1.

When installing the transmitter to one of the optional mounting brackets, torque the bolts to 125 in-lb. (0,9 N-m).

Table 2-1. Mounting brackets

Options	Description	Mounting Type	Bracket Material	Bolt Material
B4	Coplanar Flange Bracket	2-in. Pipe/Panel	SST	SST
B1	Traditional Flange Bracket	2-in. Pipe	Painted Carbon Steel	Carbon Steel
B2	Traditional Flange Bracket	Panel	Painted Carbon Steel	Carbon Steel
B3	Traditional Flange Flat Bracket	2-in. Pipe	Painted Carbon Steel	Carbon Steel
B7	Traditional Flange Bracket	2-in. Pipe	Painted Carbon Steel	SST
B8	Traditional Flange Bracket	Panel	Painted Carbon Steel	SST
B9	Traditional Flange Flat Bracket	2-in. Pipe	Painted Carbon Steel	SST
BA	Traditional Flange Bracket	2-in. Pipe	SST	SST
BC	Traditional Flange Flat Bracket	2-in. Pipe	SST	SST

Flange bolts

The 3051S MultiVariable transmitter can be shipped with a Coplanar flange or a Traditional flange installed with four 1.75-inch flange bolts. Mounting bolts and bolting configurations for the Coplanar and Traditional flanges can be found in Figure 2-5 on page 17. Stainless steel bolts supplied by Emerson Process Management are coated with a lubricant to ease installation. Carbon steel bolts do not require lubrication. No additional lubricant should be applied when installing either type of bolt. Bolts supplied by Emerson Process Management are identified by their head markings:

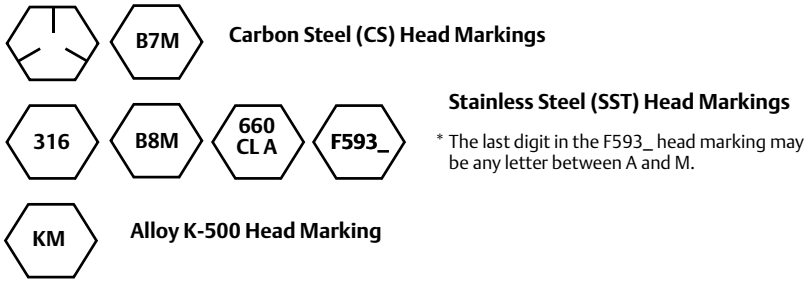

Bolt installation

⚠ Only use bolts supplied with the Rosemount 3051S MultiVariable transmitter or sold by Emerson Process Management as spare parts. Use the following bolt installation procedure to:

1. Finger-tighten the bolts.
2. Torque the bolts to the initial torque value using a crossing pattern. For initial torque values, see Table 2-2.
3. Torque the bolts to the final torque value using the same crossing pattern. For final torque values, see Table 2-2.

Torque values for the flange and manifold adapter bolts are as follows:

Table 2-2. Bolt installation torque values

Bolt Material	Option Code	Initial Torque Value	Final Torque Value
CS-ASTM-A449	Standard	300 in.-lb (34 N-m)	650 in.-lb (73 N-m)
316 SST	Option L4	150 in.-lb (17 N-m)	300 in.-lb (34 N-m)
ASTM-A-193-B7M	Option L5	300 in.-lb (34 N-m)	650 in.-lb (73 N-m)
Alloy K-500	Option L6	300 in.-lb (34 N-m)	650 in.-lb (73 N-m)
ASTM-A-453-660	Option L7	150 in.-lb (17 N-m)	300 in.-lb (34 N-m)
ASTM-A-193-B8M	Option L8	150 in.-lb (17 N-m)	300 in.-lb (34 N-m)

Figure 2-5. Common transmitter assemblies

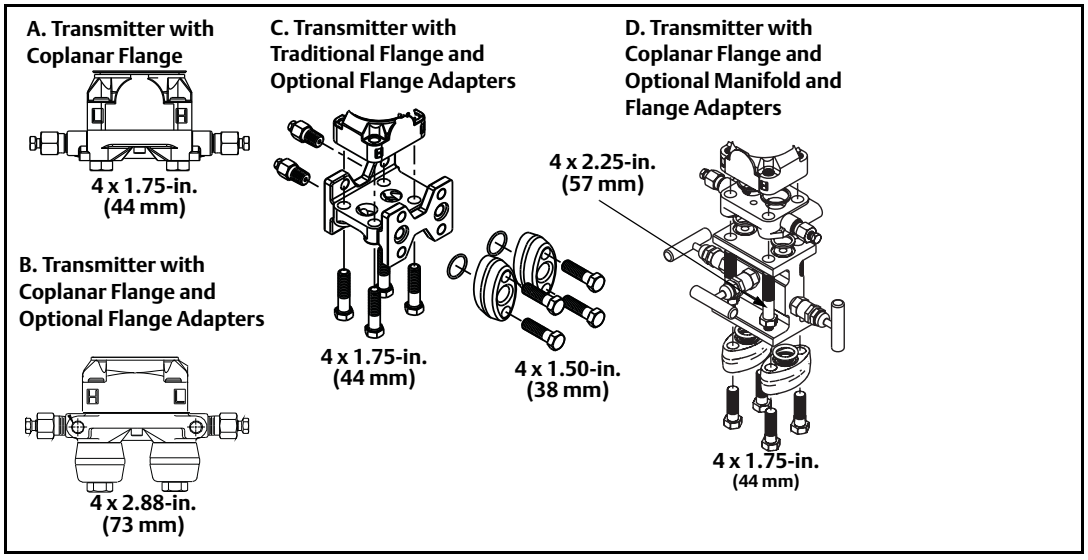

Mounting requirements

Impulse piping configurations depend on specific measurement conditions. Refer to Figure 2-6 on page 18 for examples of the following mounting configurations:

Liquid flow measurement

- Place taps to the side of the line to prevent sediment deposits on the process isolators.
- Mount the transmitter beside or below the taps so gases vent into the process line.
- Mount drain/vent valve upward to allow gases to vent.

Gas flow measurement

- Place taps in the top or side of the line.
- Mount the transmitter beside or above the taps so to drain liquid into the process line.

Steam flow measurement

- Place taps to the side of the line.
- Mount the transmitter below the taps to ensure that impulse piping will remain filled with condensate.
- In steam service above 250 °F (121 °C), fill impulse lines with water to prevent steam from contacting the transmitter directly and to ensure accurate measurement start-up.

Note
For steam or other elevated temperature services, it is important that temperatures at the transmitter process connection do not exceed the transmitter's operating limits.

Figure 2-6. Installation examples

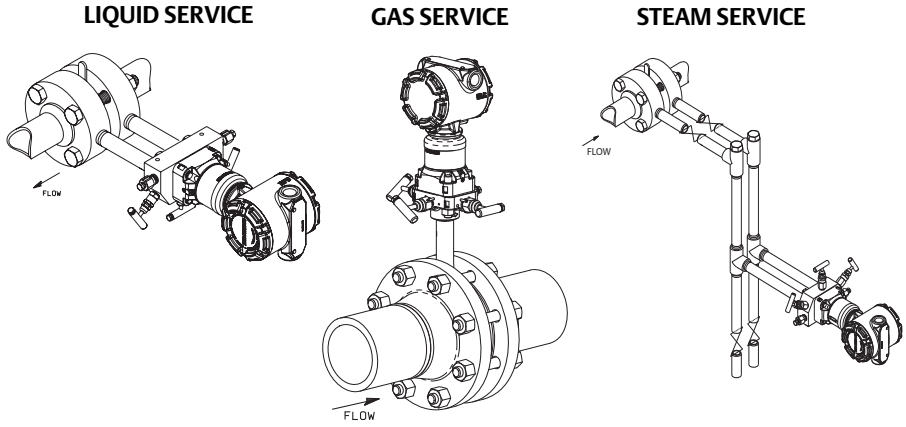

2.4.4 Process connections

The 3051S MultiVariable transmitter flange process connection size is 1/4–18 NPT. Flange adapters with a 1/4–18 NPT to 1/2–14 NPT connection are available with the D2 option. Use a plant-approved lubricant or sealant when making the process connections. The process connections on the transmitter flange are on 2 1/8-inch (54 mm) centers to allow direct mounting to a three-valve or five-valve manifold. Rotate one or both of the flange adapters to attain connection centers of 2 inches (51 mm), 2 1/8 inches (54 mm), or 2 1/4 inches (57 mm).

⚠ Install and tighten all four flange bolts before applying pressure to avoid leakage. When properly installed, the flange bolts will protrude through the top of the SuperModule Isolator Plate. See 2-7. Do not attempt to loosen or remove the flange bolts while the transmitter is in service.

Figure 2-7. Supermodule isolator plate

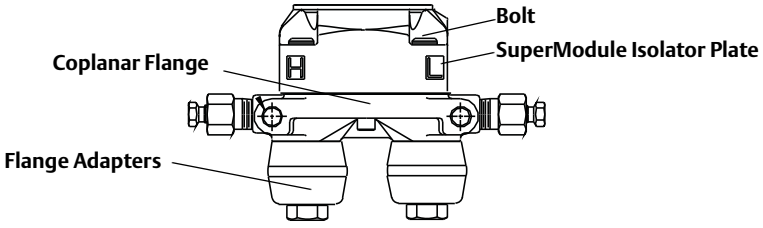

To install adapters to a Coplanar flange, perform the following procedure:

1. Remove the flange bolts.
2. Leaving the flange in place, move the adapters into position with the o-rings installed.
3. Attach the adapters and the Coplanar flange to the transmitter SuperModule assembly using the longer of the bolts supplied.
4. Tighten the bolts. Refer to Table 2-2 on page 2-17 for torque specifications.

Refer to "Spare Parts" on page 2-37 for the correct part numbers of the flange adapters and o-rings designed for the 3051S MultiVariable Transmitter.

Note
The two styles of Rosemount flange adapters (Rosemount 3051S/3051/2051) each require a unique o-ring (see Figure 2-8). Use only the o-ring designed for the corresponding flange adaptor.

Figure 2-8. O-Rings.

⚠ WARNING

Failure to install proper flange adapter o-rings may cause process leaks, which can result in death or serious injury. The two flange adapters are distinguished by unique o-ring grooves. Only use the o-ring that is designed for its specific flange adapter, as shown below.

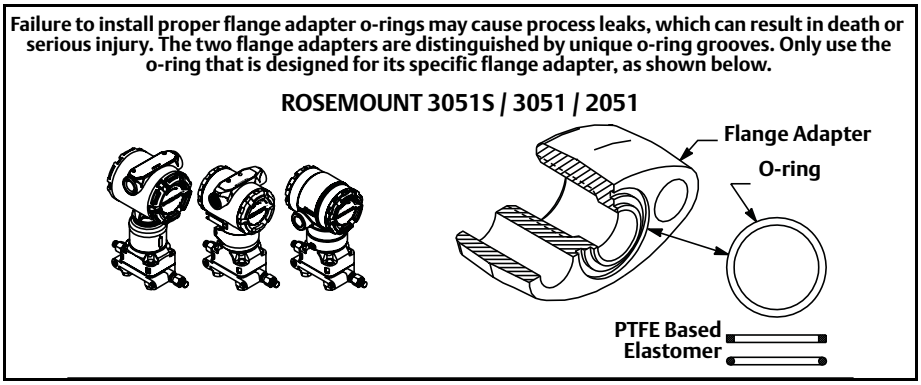

⚠ When removing flanges or adapters, visually inspect the PTFE o-rings. Replace them if there are any signs of damage, such as nicks or cuts. If replacing the o-rings, re-torque the flange bolts after installation to compensate for seating of the PTFE o-ring. Refer to "Flange and Drain Vent" on page 2-20

Impulse piping considerations

The piping between the process and the transmitter must accurately transfer the pressure to obtain accurate measurements. There are many possible sources of error: pressure transfer, leaks, friction loss (particularly if purging is used), trapped gas in a liquid line, liquid in a gas line, density variations between the legs, and plugged impulse piping.

The best location for the transmitter in relation to the process pipe depends on the process itself. Use the following guidelines to determine transmitter location and placement of impulse piping:

- Keep impulse piping as short as possible.
- For liquid service, slope the impulse piping at least 1 inch per foot (8 cm per m) upward from the transmitter toward the process connection.
- For gas service, slope the impulse piping at least 1 inch per foot (8 cm per m) downward from the transmitter toward the process connection.
- Avoid high points in liquid lines and low points in gas lines.
- Make sure both impulse legs are the same temperature.
- Use impulse piping large enough to avoid friction effects and blockage.
- Vent all gas from liquid piping legs.
- When using a sealing fluid, fill both piping legs to the same level.
- When purging, make the purge connection close to the process taps and purge through equal lengths of the same size pipe. Avoid purging through the transmitter.
- Keep corrosive or hot, above 250 °F (121 °C), process material out of direct contact with the SuperModule process connection and flanges.
- Prevent sediment deposits in the impulse piping.
- Keep the liquid head balanced on both legs of the impulse piping.

Note
Take necessary steps to prevent process fluid from freezing within the process flange to avoid damage to the transmitter.

Note
Verify transmitter zero point after installation. To reset zero point, refer to “Sensor Trim Overview” on page 2-4.

2.4.5 Connect wiring and power up

It is recommended to use twisted pair wiring. To ensure proper communication, use 24 AWG to 14 AWG wire, and do not exceed 5000 feet (1500 meters).

Note
Proper electrical installation is necessary to prevent errors due to improper grounding and electrical noise. Shielded wiring is recommended for environments with high EMI/RFI levels. Shielded wiring is required in order to comply with NAMUR requirements.

Figure 2-9. Terminal blocks

3051SMV without Optional Process Temperature Connection	3051SMV with Optional Process Temperature Connection
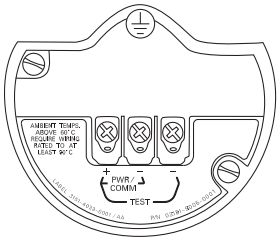	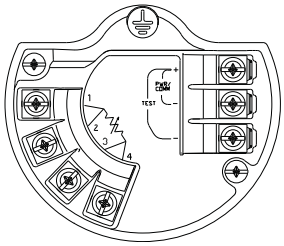

To make connections, perform the following procedure:

1. Remove the cover on the field terminals side of the housing.
2. Connect the positive lead to the “PWR/COMM +” terminal, and the negative lead to the “PWR/COMM –” terminal.

Note
Do not connect the power across the test terminals. Power could damage the test diode in the test connection.

3. If the optional process temperature input is not installed, plug and seal the unused conduit connection. If the optional process temperature input is being utilized, see “Install optional process temperature input (Pt 100 RTD sensor)” on page 2-22 for more information.

⚠ When the enclosed pipe plug is utilized in the conduit opening, it must be installed with a minimum engagement of five threads in order to comply with flameproof/explosion-proof requirements.

4. If applicable, install wiring with a drip loop. Arrange the drip loop so the bottom is lower than the conduit connections and the transmitter housing.

⚠ 5. Reinstall the housing cover and tighten so that metal contacts metal to meet flameproof/explosion-proof requirements.

2-10 shows the wiring connections necessary to power a 3051S MultiVariable transmitter and enable communications with a hand-held 375 Field communicator.

Figure 2-10. Transmitter wiring

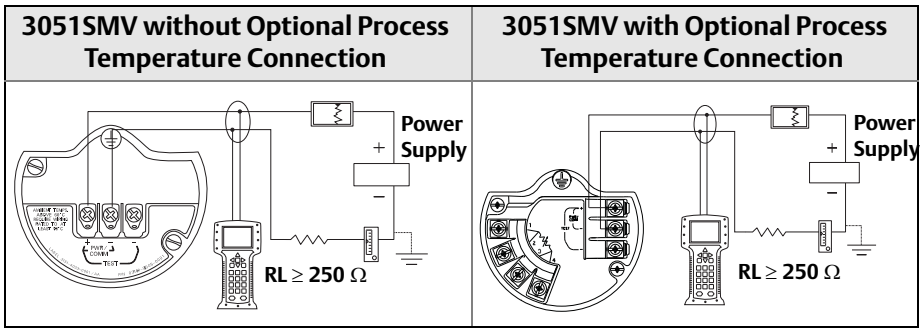

Note
Installation of the transient protection terminal block does not provide transient protection unless the 3051S MultiVariable transmitter housing is properly grounded. See "Grounding" on page 2-25 for more information.

Install optional process temperature input (Pt 100 RTD sensor)

Note
To meet ATEX/IECEx Flameproof certification, only ATEX/IECEx Flameproof Cables (Temperature Input Code C30, C32, C33, C34 or customer supplied equivalent) may be used.

1. Mount the Pt 100 RTD Sensor in the appropriate location.

Note
Use shielded four-wire cable for the process temperature connection.

2. Connect the RTD cable to the 3051S MultiVariable transmitter by inserting the cable wires through the unused housing conduit connection and connect to the four screws on the transmitter terminal block. An appropriate cable gland should be used to seal the conduit opening around the cable. See Figure 2-11 on page 23.

3. Connect the RTD cable shield wire to the ground lug in the housing.

Figure 2-11. 3051S MultiVariable RTD wiring connection

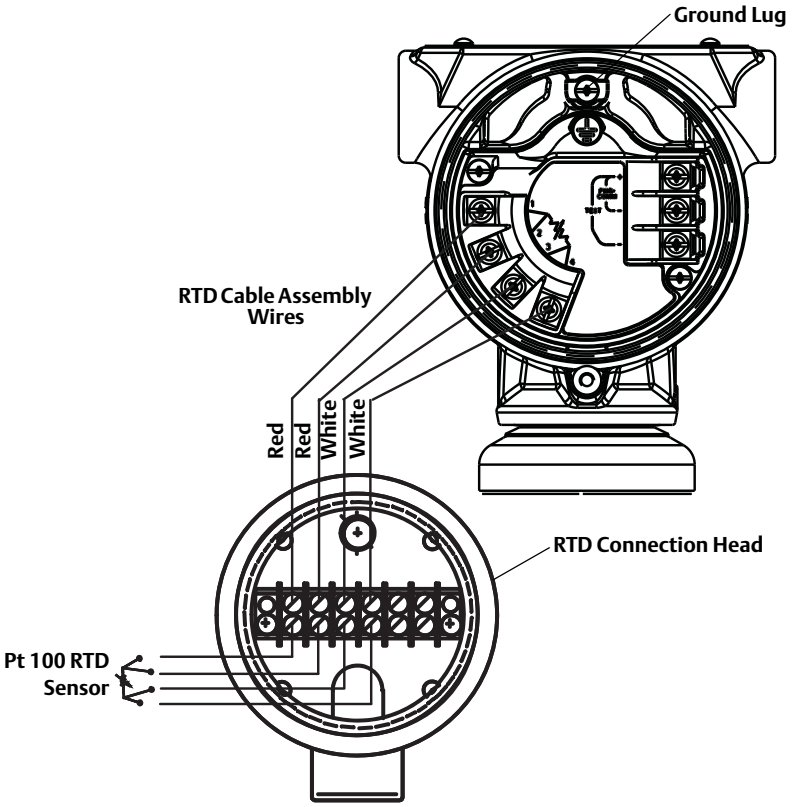

Three-wire RTD

A four-wire Pt 100 RTD is required to maintain published performance specifications. A three-wire Pt 100 RTD may be used with degraded performance. If connecting to a three-wire RTD, use a four-wire cable to connect the 3051S MultiVariable terminal block to the RTD connection head. Within the RTD connection head, connect two of the same colored wires from the 3051S MultiVariable to the single colored wire of the RTD sensor.

Surges/transients

The transmitter will withstand electrical transients of the energy level usually encountered in static discharges or induced switching transients. However, high-energy transients, such as those induced in wiring from nearby lightning strikes, can damage the transmitter.

Optional transient protection terminal block

The transient protection terminal block can be ordered as an installed option (Option Code T1 in the transmitter model number) or as a spare part to retrofit existing 3051S MultiVariable transmitters in the field. For a complete listing of spare part numbers for transient protection terminal blocks, refer to "Spare Parts" on page 2-37. A lightning bolt symbol on a terminal block identifies it as having transient protection.

Note
Grounding the transmitter case using the threaded conduit connection may not provide a sufficient ground. The transient protection terminal block (Option Code T1) will not provide transient protection unless the transmitter case is properly grounded. See "Grounding" on page 2-25 to ground the transmitter case. Do not run transient protection ground wire with signal wiring; the ground wire may carry excessive current if a lightning strike occurs.

Signal wire grounding

Do not run signal wiring in conduit or open trays with power wiring, or near heavy electrical equipment. Ground the shield of the signal wiring at any one point on the signal loop. See 2-12. The negative terminal of the power supply is a recommended grounding point.

Figure 2-12. Signal wire grounding

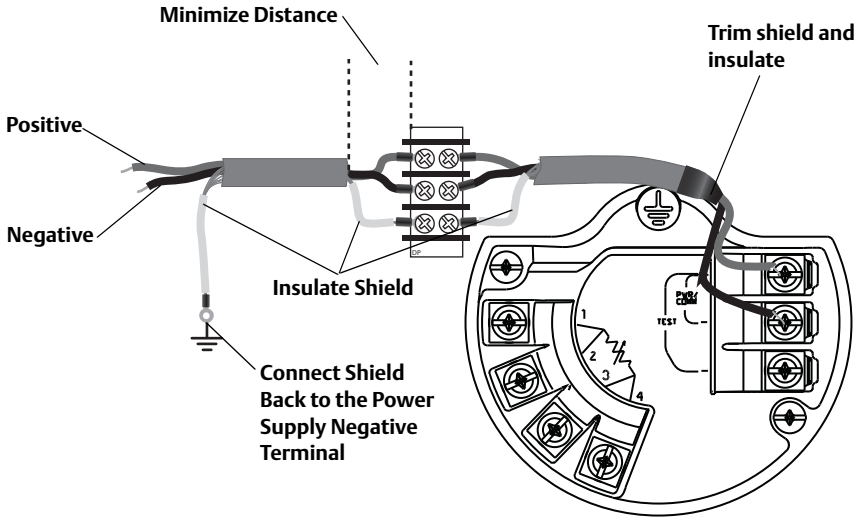

Power Supply 4–20 mA transmitters

The dc power supply should provide power with less than two percent ripple. Total resistance load is the sum of resistance from signal leads and the load resistance of the controller, indicator, and related pieces. Note that the resistance of intrinsic safety barriers, if used, must be included.

See "Load limitations" on page 2-17 for transmitter resistance load limits.

Note
A minimum loop resistance of 250 ohms is required to communicate with a 375 Field Communicator. If a single power supply is used to power more than one 3051S MultiVariable transmitter, the power supply used and circuitry common to the transmitters should not have more than 20 ohms of impedance at 1200 Hz.

2.4.6 Conduit electrical connector wiring (option GE or GM)

For 3051S MultiVariable transmitters with conduit electrical connectors GE or GM, refer to the cordset manufacturer's installation instructions for wiring details. For FM Intrinsically Safe, non-incendive hazardous locations, install in accordance with Rosemount drawing 03151-1009 to maintain outdoor rating (NEMA 4X and IP66.) For more information, see Appendix B, page B-1.

2.4.7 Grounding

Transmitter case

Always ground the transmitter case in accordance with national and local electrical codes. The most effective transmitter case grounding method is a direct connection to earth ground with minimal impedance (< 1 Ω). Methods for grounding the transmitter case include:

Internal ground connection

The Internal Ground Connection screw is inside the terminal side of the electronics housing. The screw is identified by a ground symbol (⏚), and is standard on all 3051S MultiVariable transmitters.

Figure 2-13. Internal ground connection

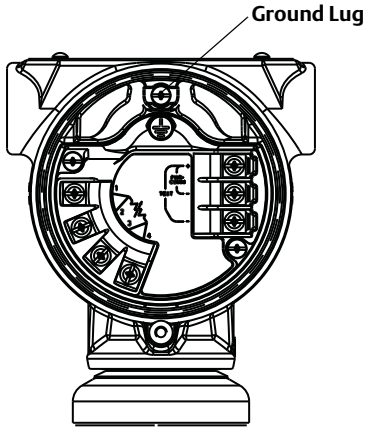

External ground connection

The External Ground Connection is on the outside of the SuperModule housing. The connection is identified by a ground symbol (⏚). An external ground assembly is included with the option codes shown in Table 2-3 on page 2-26 or is available as a spare part (03151-9060-0001).

Figure 2-14. External ground connection

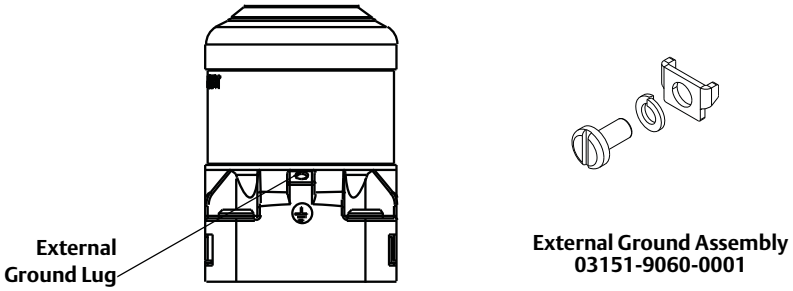

Table 2-3. External ground screw approval option codes

Option Code	Description
E1	ATEX Flameproof
I1	ATEX Intrinsic Safety
N1	ATEX Type n
ND	ATEX Dust
E4	TIIS Flameproof
K1	ATEX Flameproof, Intrinsic Safety, Type n, Dust (combination of E1, I1, N1, and ND)
E7	IECEx Flameproof, Dust Ignition-proof
N7	IECEx Type n
K7	IECEx Flameproof, Dust Ignition-proof, Intrinsic Safety, and Type n (combination of E7, I7, and N7)
KA	ATEX and CSA Explosion-proof, Intrinsically Safe, Division 2 (combination of E1, E6, I1, and I6)
KC	FM and ATEX Explosion-proof, Intrinsically Safe, Division 2 (combination of E5, E1, I5, and I1)
T1	Transient terminal block
D4	External ground screw assembly

2.5 Rosemount 305 and 304 Manifolds

The Rosemount 305 Integral Manifold is available in two designs: Coplanar and Traditional. The traditional 305 Integral Manifold can be mounted to most primary elements with mounting adapters.

Figure 2-15. Rosemount 305 Manifold styles

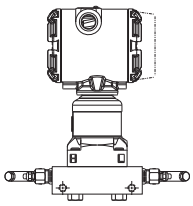

305 INTEGRAL COPLANAR

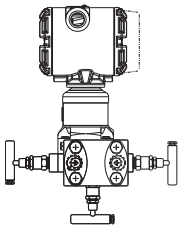

305 INTEGRAL TRADITIONAL

The Rosemount 304 comes in two basic styles: Traditional (flange x flange and flange x pipe) and Wafer. The 304 traditional manifold comes in two, three, and five-valve configurations. The 304 wafer manifold comes in three and five-valve configurations.

Figure 2-16. Rosemount 304 Manifold styles

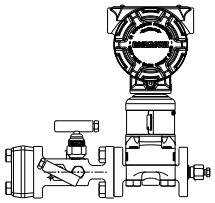

304 TRADITIONAL

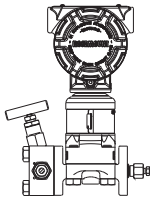

304 WAFER

2.5.1 Rosemount 305 Integral Manifold installation procedure

To install a 305 Integral Manifold to a 3051S MultiVariable transmitter:

⚠ 1. Inspect the PTFE SuperModule o-rings. If the o-rings are undamaged, reusing them is recommended. If the o-rings are damaged (if they have nicks or cuts, for example), replace them with new o-rings.

Note
If replacing the o-rings, be careful not to scratch or deface the o-ring grooves or the surface of the isolating diaphragm when removing the damaged o-rings.

2. Install the Integral Manifold on the SuperModule process connection. Use the four manifold bolts for alignment. Finger tighten the bolts, then tighten the bolts incrementally in a cross pattern to final torque value. See "Flange bolts" on page 2-16 for complete bolt installation information and torque values. When fully tightened, the bolts should extend through the top of the SuperModule housing.

3. If the PTFE SuperModule o-rings have been replaced, the flange bolts should be re-tightened after installation to compensate for seating of the o-rings.

4. If applicable, install flange adapters on the process end of the manifold using the 1.75-in. flange bolts supplied with the transmitter.

2.5.2 Rosemount 304 Conventional Manifold installation procedure

To install a 304 Conventional Manifold to a 3051S MultiVariable transmitter:

1. Align the Conventional Manifold with the transmitter flange. Use the four manifold bolts for alignment.

2. Finger tighten the bolts, then tighten the bolts incrementally in a cross pattern to final torque value. See "Flange bolts" on page 2-16 for complete bolt installation information and torque values. When fully tightened, the bolts should extend through the top of the SuperModule assembly bolt hole but must not contact the SuperModule housing.

3. If applicable, install flange adapters on the process end of the manifold using the 1.75-in. flange bolts supplied with the transmitter.

2.5.3 Manifold operation to zero the differential pressure sensor

⚠ Improper installation or operation of manifolds may result in process leaks, which may cause death or serious injury.

Always perform a zero trim on the transmitter/manifold assembly after installation to eliminate any Differential Pressure shift due to mounting effects. See Section 4: Operation and Maintenance, "Sensor Trim Overview" on page 2-4.

Three and five-valve configurations shown:

In normal operation the two block valves between the process and instrument ports will be open and the equalizing valve will be closed.

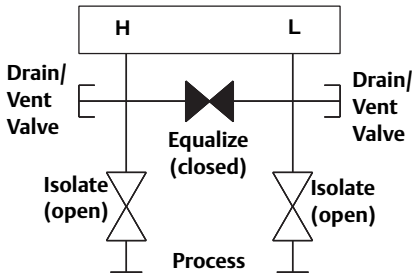

1. To zero the 3051S MultiVariable transmitter, close the block valve to the low pressure (downstream) side of the transmitter first.

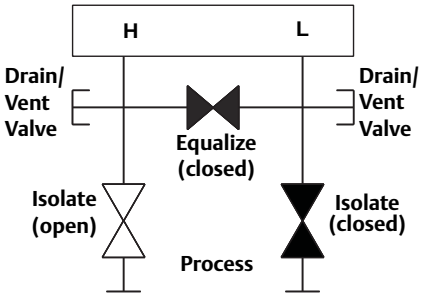

2. Open the center (equalize) valve to equalize the pressure on both sides of the transmitter. The manifold valves are now in the proper configuration for zeroing the Differential Pressure sensor of the transmitter.

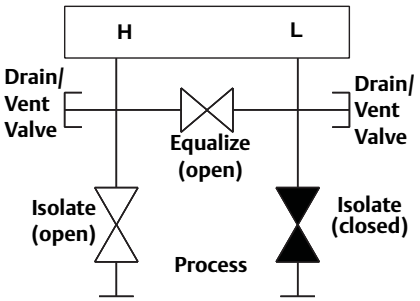

3. After zeroing the Differential Pressure sensor, close the equalizing valve.

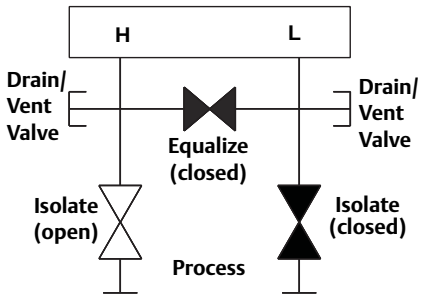

4. Open the block valve on the low pressure side of the transmitter to return the transmitter to service.

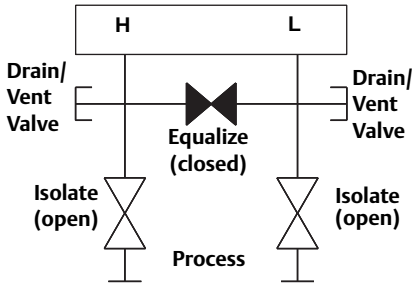

Five-valve Natural Gas configurations shown:

In normal operation, the two block valves between the process and instrument ports will be open, and the equalizing valves will be closed.

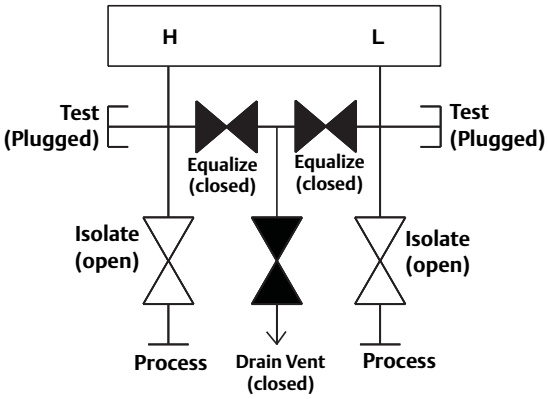

1. To zero the 3051S MultiVariable transmitter, first close the block valve on the low pressure (downstream) side of the transmitter.

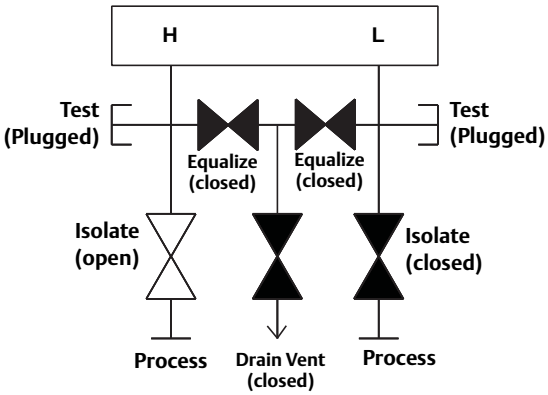

Note
Do not open the low side equalize valve before the high side equalize valve. Doing so will overpressure the transmitter.

2. After zeroing the Differential Pressure sensor, close the equalize valve on the low pressure (downstream) side of the transmitter.

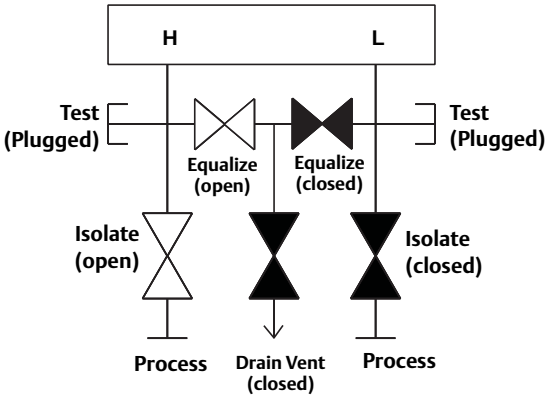

3. Close the equalize valve on the high pressure (upstream) side.

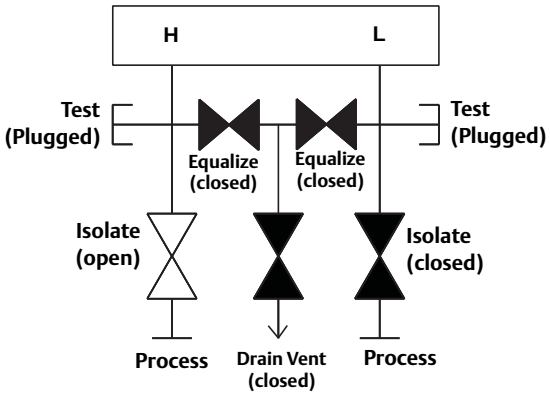

4. Finally, to return the transmitter to service, open the low side isolation valve.

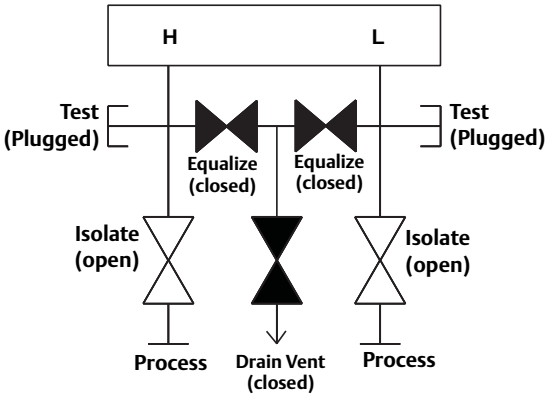

Section 3 Configuration

Overview . . . . . page 9
Safety messages . . . . . page 10
Engineering assistant installation . . . . . page 11
Flow configuration . . . . . page 13
Basic device configuration . . . . . page 31
Detailed device configuration . . . . . page 34
Variable configuration . . . . . page 43
Menu trees and 475 fast keys . . . . . page 64

3.1 Overview

This section contains information for configuring the flow and device configuration for the 3051S MultiVariable Transmitter. Engineering assistant installation and Flow configuration instructions apply to Engineering Assistant version 6.1 or later. Basic device configuration Detailed device configuration and Variable configuration are shown for AMS version 9.0 or later, but also include fast key sequences for 475 Field Communicator version 2.0 or later. Engineering Assistant and AMS screens are similar and follow the same instructions for use and navigation. For convenience, 475 Field Communicator fast key sequences are labeled “Fast Keys” for each software function below the appropriate headings. The functionality of each host is shown in Table 3-1.

Table 3-1. Host Functionality

• **Available** — **Not available**

MultiVariable Type	Functionality	3051SMV Engineering Assistant	AMS	475
Fully Compensated Mass and Energy Flow (M)	Flow Configuration	•	—	—
	Device Configuration	•	•	•
	Test Calculation	•	•	•
	Calibration	•	•	•
	Diagnostics	•	•	•
Direct Process Variable Output (P)	Device Configuration	—	•	•
	Calibration	—	•	•
	Diagnostics	—	•	•

3.2 Safety messages

⚠ Procedures and instructions in this section may require special precautions to ensure the safety of the personnel performing the operation. Information that raises potential safety issues is indicated with a warning symbol (⚠). Refer to the following safety messages before performing an operation preceded by this symbol.

3.2.1 Warnings

⚠ WARNING

Failure to follow these installation guidelines could result in death or serious injury:

- Make sure only qualified personnel perform the installation.

Explosions could result in death or serious injury:

- Do not remove the transmitter cover in explosive atmospheres when the circuit is live.
- Before connecting a 475 Field Communicator in an explosive atmosphere, make sure the instruments in the loop are installed in accordance with intrinsically safe or non-incendive field wiring practices.
- Both transmitter covers must be fully engaged to meet flameproof/explosion-proof requirements.
- Verify that the operating atmosphere of the transmitter is consistent with the appropriate hazardous locations certifications.

Electrical shock could cause death or serious injury. If the sensor is installed in a high-voltage environment and a fault or installation error occurs, high voltage may be present on the transmitter leads and terminals:

- Use extreme caution when making contact with the leads and terminals.

Process leaks could result in death or serious injury.

- Install and tighten all four flange bolts before applying pressure.
- Do not attempt to loosen or remove flange bolts while the transmitter is in service.
- Replacement equipment or spare parts not approved by Emerson Process Management for use as spare parts could reduce the pressure retaining capabilities of the transmitter and may render the instrument dangerous.
- Use only bolts supplied or sold by Emerson Process Management as spare parts.

Improper assembly of manifolds to traditional flange can damage the device.

- For safe assembly of manifold to traditional flange, bolts must break back plane of flange web (i.e., bolt hole) but must not contact the sensor module.

Improper installation or repair of the SuperModule™ assembly with high pressure option (P0) could result in death or serious injury.

- For safe assembly, the high pressure SuperModule assembly must be installed with ASTM A193 Class 2 Grade B8M Bolts and either a 305 manifold or a DIN-compliant traditional flange.

Static electricity can damage sensitive components.

⚠ Observe safe handling precautions for static-sensitive components.

3.3 Engineering assistant installation

3.3.1 Engineering assistant version 6.1 or later

The 3051SMV Engineering Assistant 6.1 or later is PC-based software that performs configuration, maintenance, diagnostic functions, and serves as the primary communication interface to the 3051S MultiVariable Transmitter with the Fully Compensated Mass and Energy Flow Feature Board.

The 3051SMV Engineering Assistant software is required to complete the flow configuration.

3.3.2 Installation and initial setup

The following are the minimum system requirements to install the 3051SMV Engineering Assistant software:

- Pentium-grade Processor: 500 MHz or faster
- Operating System: Windows 2000 (32-bit), Windows XP Professional (32-bit), Windows 7 (32-bit), and Windows 7 (64-bit)
- 256 MB RAM
- 100 MB free hard disk space
- RS232 serial port or USB port (for use with HART modem)
- CD-ROM

Installing the 3051SMV engineering assistant version 6.1 or later

Engineering Assistant is available with or without the HART modem and connecting cables. The complete Engineering Assistant package contains the software CD and one HART modem with cables for connecting the computer to the 3051S MultiVariable Transmitter (See “Ordering information” on page 27.)

1. Uninstall any existing versions of Engineering Assistant 6 currently installed on the PC.
2. Insert the new Engineering Assistant disk into the CD-ROM.
3. Windows should detect the presence of a CD and start the installation program. Follow the on-screen prompts to finish the installation. If Windows does not detect the CD, use Windows Explorer or My Computer to view the contents of the CD-ROM, and then double click the SETUP.EXE program.
4. A series of screens (Installation Wizard) will appear and assist in the installation process. Follow the on-screen prompts. It is recommended that the default installation settings are used.

Note
Engineering Assistant version 6.1 or later requires the use of Microsoft® .NET Framework version 2.0 or later. If .NET version 2.0 is not currently installed, the software will be automatically installed during the Engineering Assistant installation. Microsoft .NET version 2.0 requires an additional 200 MB of disk space.

Connecting to a PC

Figure 3-1 shows how to connect a computer to a 3051S MultiVariable Transmitter.

Figure 3-1. Connecting a PC to the 3051S MultiVariable transmitter

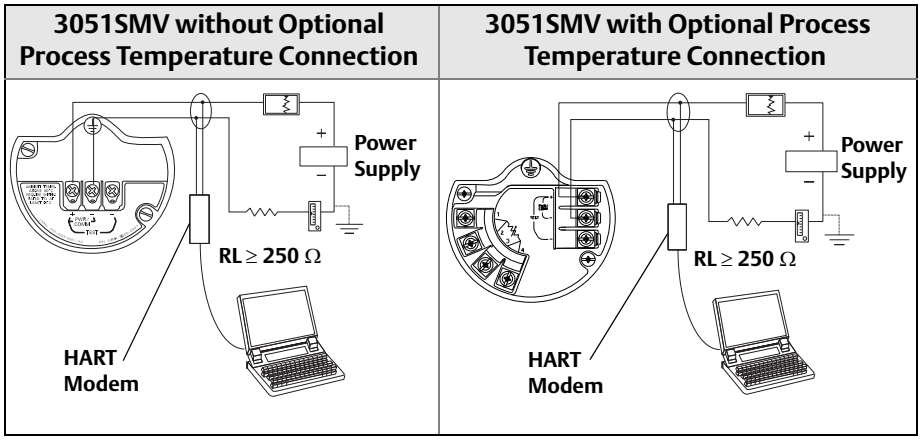

1. Remove the cover from the field terminals side of the housing.
2. Power the device as outlined in "Connect Wiring and Power Up" on page 13.
3. Connect the HART modem cable to the PC.
4. On the side marked "Field Terminals," connect the modem mini-grabbers to the two terminals marked "PWR/COMM."
5. Launch the 3051SMV Engineering Assistant. For more information on launching Engineering Assistant, see "Launching engineering assistant" on page 15.
6. ⚠ Once the configuration is complete, replace cover and tighten until metal contacts metal to meet flameproof/explosion-proof requirements. See "Cover Installation" on page 6 for more information.

3.4 Flow configuration

3.4.1 3051SMV engineering assistant 6.1 or later

The 3051SMV Engineering Assistant is designed to guide the user through the setup of the flow configuration of a 3051S MultiVariable Transmitter. The flow configuration screens allow the user to specify the fluid, operating conditions, and information about the primary element including the inside pipe diameter. This information will be used by the 3051SMV Engineering Assistant to create the flow configuration parameters that can be sent to the transmitter or saved for future use.

Figure 3-2 illustrates the path in which the 3051SMV Engineering Assistant will guide the user through a flow configuration. If a Natural Gas, Custom Liquid, or Custom Gas option is chosen, an extra screen will be provided to specify the gas composition or fluid properties.

Figure 3-2. Flow configuration flowchart

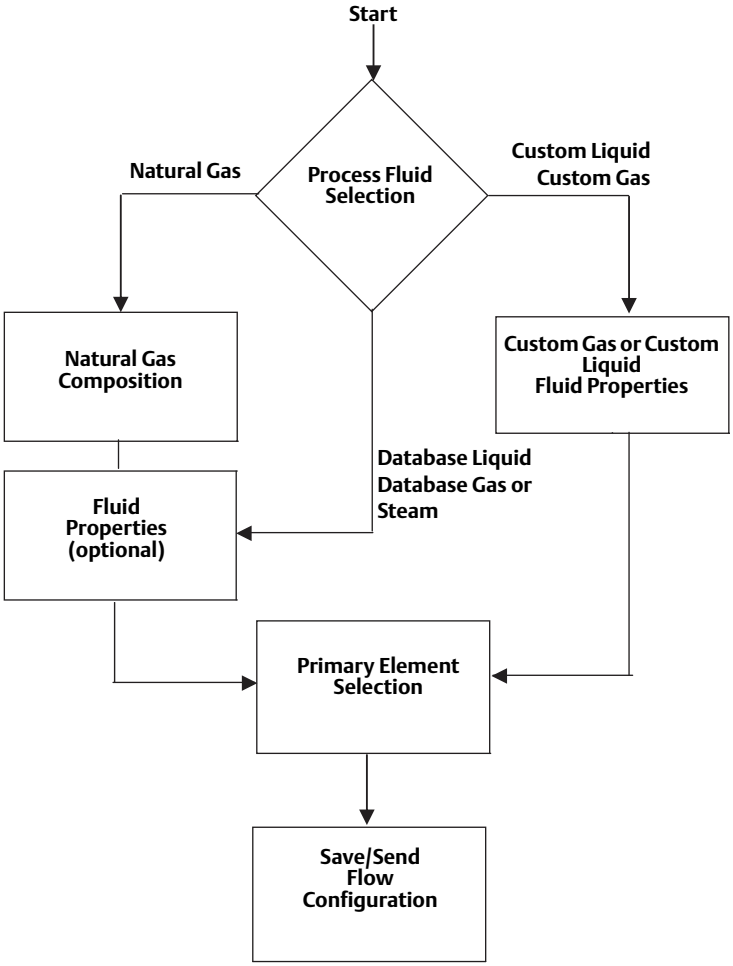

Online and offline mode

The Engineering Assistant software can be used in two modes: Online and Offline. In Online mode, the user can receive the configuration from the transmitter, edit the configuration, send the changed configuration to the transmitter, or save the configuration to a file. In Offline mode, the user may create a new flow configuration and save the configuration to a file or open and modify an existing file.

3.4.2 Basic navigation overview

Figure 3-3. Engineering assistant basic navigation overview

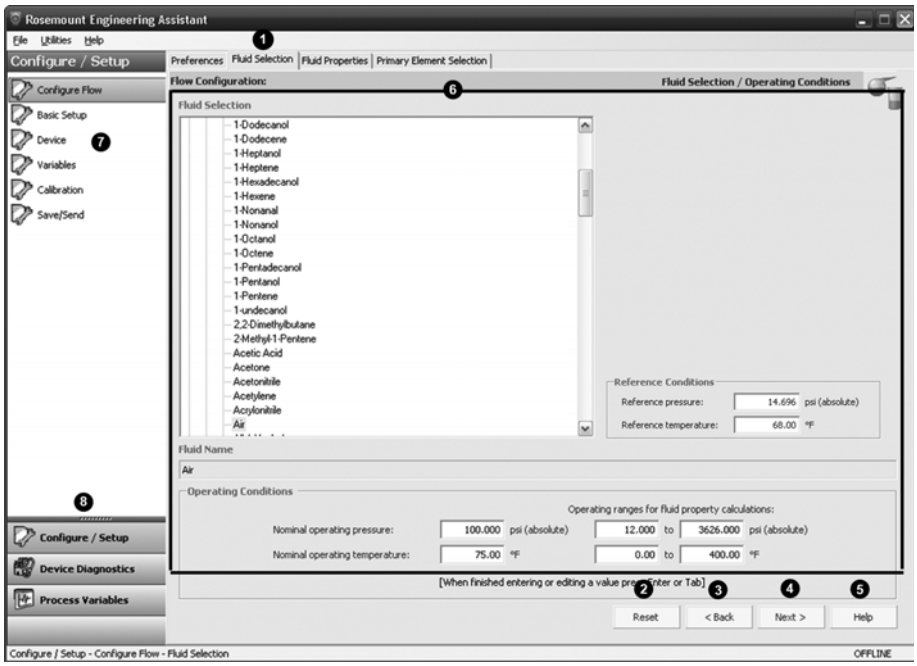

The Engineering Assistant software can be navigated in a variety of ways. The numbers below correspond to the numbers shown in Figure 3-3.

1. The navigation tabs contain the flow configuration information. In Offline mode, each tab will not become active until the required fields on the previous tab are completed. In Online mode, these tabs will be functional unless a change on a preceding tab is made.

2. The Reset button will return each field within all of the flow configuration tabs (*Fluid Selection*, *Fluid Properties*, and *Primary Element Selection*) to the values initially displayed at the start of the configuration.

   a. The Reset button will return each field within all of the flow configuration tabs (*Fluid Selection*, *Fluid Properties*, and *Primary Element Selection*) to the values initially displayed at the start of the configuration.

   b. If editing a previously saved flow configuration, the values will return to those that were last saved. If starting a new flow configuration, all entered values will be erased.

3. The Back button is used to step backward through the flow configuration tabs.

4. The Back button is used to step backward through the flow configuration tabs.

5. The Next button is used to step forward through the flow configuration tabs. The Next button will not become active until all required fields on the current page are completed.

6. The Help button may be clicked at any time to get a detailed explanation of the information required on the current configuration tab.

7. Any configuration information that needs to be entered or reviewed will appear in this portion of the screen.

8. These menus navigate to the Configure Flow, Basic Setup, Device, Variables, Calibration, and Save/Send tabs.

9. These buttons navigate to Config/Setup, Device Diagnostics or Process Variables sections.

3.4.3 Launching engineering assistant

Flow configuration for the 3051S MultiVariable Transmitter is achieved by launching the Engineering Assistant Software from the *START* menu. The following steps show how to open the Engineering Assistant Software, and connect to a device.

1. Select the Start menu > All Programs > Engineering Assistant. Engineering Assistant will open to screen shown in Figure 3-4 on page 16.

2. If working Offline, click the Offline button located on the bottom of the screen shown in Figure 3-4.

   If working Online, click the Search button located on the lower right hand corner of the screen shown in Figure 3-4. Engineering Assistant will begin to search for online devices. When the search is completed, choose the device to communicate with and click Receive Configuration. See Figure 3-4.

The HART Master Level can be set to either primary or secondary. Secondary is the default and should be used when the transmitter is on the same segment as another HART communication device. The COM Port and device address may also be edited as needed.

Figure 3-4. Engineering assistant device connection screen

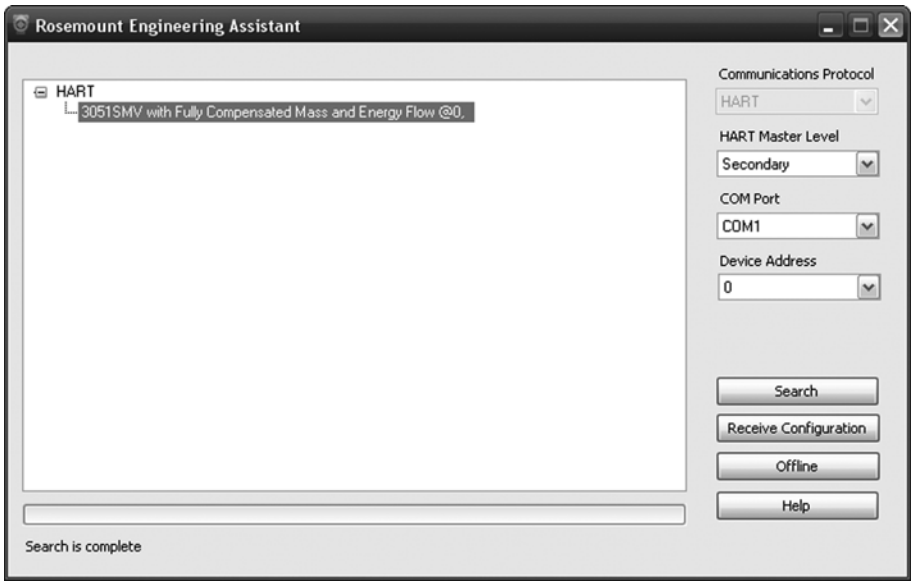

3.4.4 Preferences

The *Preferences* tab, shown in Figure 3-5, allows the user to select the preferred engineering units to display and specify flow configuration information.

- Select the preferred engineering units. If units are needed other than the default U.S. or S.I. units, use the Custom Units setting. If *Custom Units* are selected, configure the *Individual Parameters* using the drop-down menus.
- Unit preferences selected will be retained for future Engineering Assistant sessions. Check the box to prevent the *Preferences* tab from being automatically shown in future sessions. The Preferences are always available by clicking on the *Preferences* tab.

Figure 3-5. Preferences tab

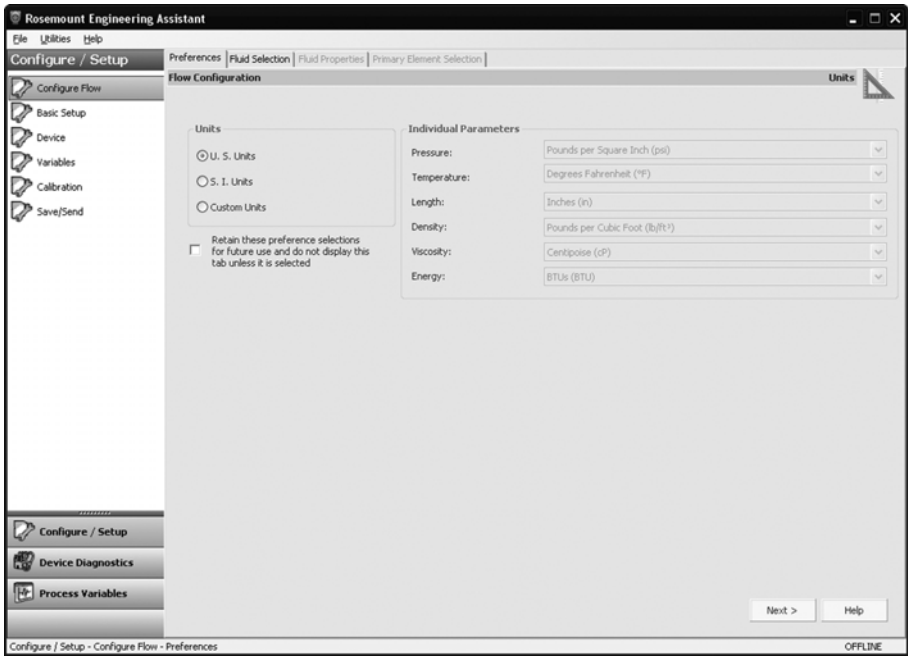

3.4.5 Fluid selection for database liquid/gas

The *Fluid Selection* tab shown in Figure 3-6 allows the user to choose the process fluid.

Figure 3-6. Fluid selection tab

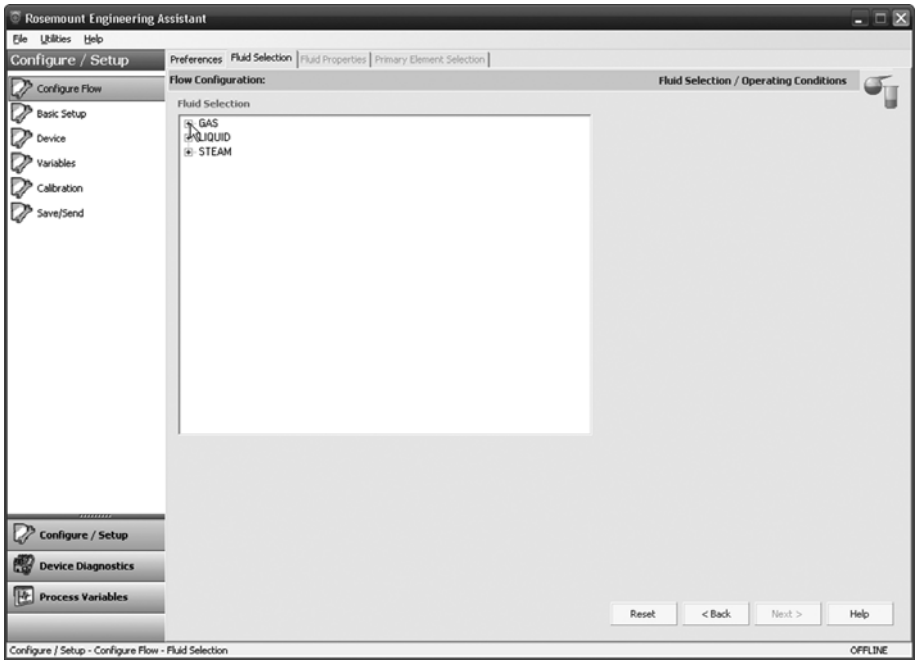

Note
The following example will show a flow configuration for an application with Database Gas Air as the process fluid and a 405C Conditioning Orifice Plate as the primary element. The procedure to configure an application with other fluids and other primary elements will be similar to this example. Natural gases, custom liquids, and custom gases require additional steps during the configuration. See "Other fluid configurations" on page 26 for more information.

1. Engineering Assistant may open to the *Preferences* tab. Using the tabs at the top of the screen, navigate to the *Fluid Selection* tab.
2. Expand the Gas category (click on the + icon).
3. Expand the Database Gas category.
4. Select the appropriate fluid (Air for this example) from the list of database fluids.

Figure 3-7. Fluid selection tab - database gas air

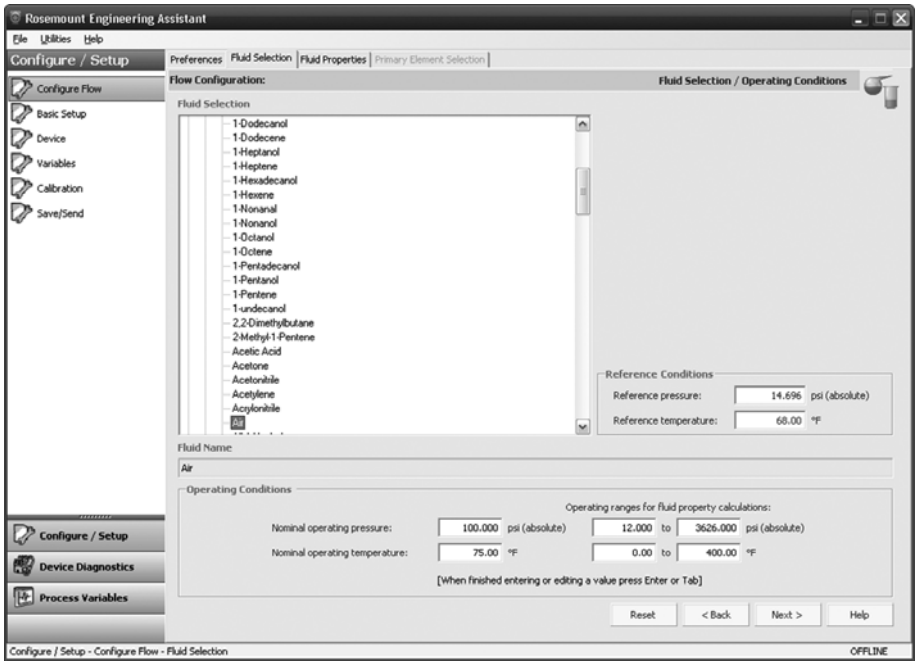

5. Enter the *Nominal Operating Pressure*, press the Enter or Tab key.

Note
The Nominal Operating Pressure must be entered in absolute pressure units.

6. Enter the *Nominal Operating Temperature*, press the Enter or Tab key. Engineering Assistant will automatically fill in suggested operating ranges, as shown in Figure 3-7. These values may be edited as needed by the user.

7. Verify that the *Reference Conditions* are correct for the application. These values may be edited as needed.

Note
Reference pressure and temperature values are used by Engineering Assistant to convert the flow rate from mass units to mass units expressed as standard or normal volumetric units.

8. Click Next > to proceed to the *Fluid Properties* tab.

Table 3-2. 3051S MultiVariable transmitter liquids and gases database

1,1,2,2–Tetrafluoroethane	2,2–Dimethylbutane	Cyclopentene	Isoprene	n–Decane
1,1,2–Trichloroethane	2–Methyl–1–Pentene	Cyclopropane	Isopropanol	n–Dodecane
1,2,4–Trichlorobenzene	Acetic Acid	Decanal	Melamine	n–Heptadecane
1,2–Butadiene	Acetone	Divinyl Ether	Methane	n-Heptane
1,2–Propylene Glycol	Acetonitrile	Ethane	Methanol	n–Hexane
1,3–Propylene Glycol	Acetylene	Ethanol	Methyl Acrylate	n-Nonane
1,3,5–Trichlorobenzene	Acrylonitrile	Ethylamine	Methyl Ethyl Ketone	n–Octane
1,3–Butadiene	Air	Ethylbenzene	Methyl Vinyl Ether	n–Pentane
1,4–Dioxane	Allyl Alcohol	Ethylene	m–Chloronitrobenzene	Oxygen
1,4–Hexadiene	Ammonia	Ethylene Glycol	m–Dichlorobenzene	Pentafluoroethane
1–Butene	Aniline	Ethylene Oxide	Neon	Phenol
1–Decanol	Argon	Fluorene	Neopentane	Propane
1–Decene	Benzene	Formaldehyde	Nitric Acid	Propadiene
1–Dodecanol	Benzaldehyde	Formic Acid	Nitric Oxide	Pyrene
1–Dodecene	Benzyl Alcohol	Furan	Nitrobenzene	Propylene
1–Heptanol	Biphenyl	Helium–4	Nitroethane	p-Nitroaniline
1–Heptene	Bromine	Hydrazine	Nitrogen	Sorbitol
1–Hexadecanol	Carbon Dioxide	Hydrogen	Nitrogen Trifluoride	Styrene
1–Hexene	Carbon Monoxide	Hydrogen Chloride	Nitromethane	Sulfer Dioxide
1–Octanol	Carbon Tetrachloride	Hydrogen Cyanide	Nitrous Oxide	Toluene
1–Octene	Chlorine	Hydrogen Peroxide	Nonanal	Trichloroethylene
1–Nonanol	Chlorotrifluoroethylene	Hydrogen Sulfide	n–Butane	Vinyl Acetate
1–Pentadecanol	Chloroprene	Isobutane	n–Butanol	Vinyl Chloride
1–Pentanol	Cycloheptane	Isobutylbenzene	n–Butyraldehyde	Vinyl Cyclohexane
1–Pentene	Cyclohexane	Isohexane	n–Butyronitrile	Vinylacetylene
1–Undecanol	Cyclopentane			Water

3.4.6 Fluid properties

Note
The *Fluid Properties* tab is an optional step and is not required to complete a flow configuration.

The *Fluid Properties* tab for the database gas air is shown in Figure 3-8. The user may view the properties of the chosen fluid. The fluid properties are initially shown at nominal conditions. To view density, compressibility, and viscosity of the selected fluid at other pressure and temperature values, enter a Pressure and Temperature and click Calculate.

To switch between *Density* and *Compressibility* values, use the drop-down menus.

Note
Changing the pressure and temperature values on the *Fluid Properties* tab does not affect the flow configuration.

Figure 3-8. Fluid properties tab

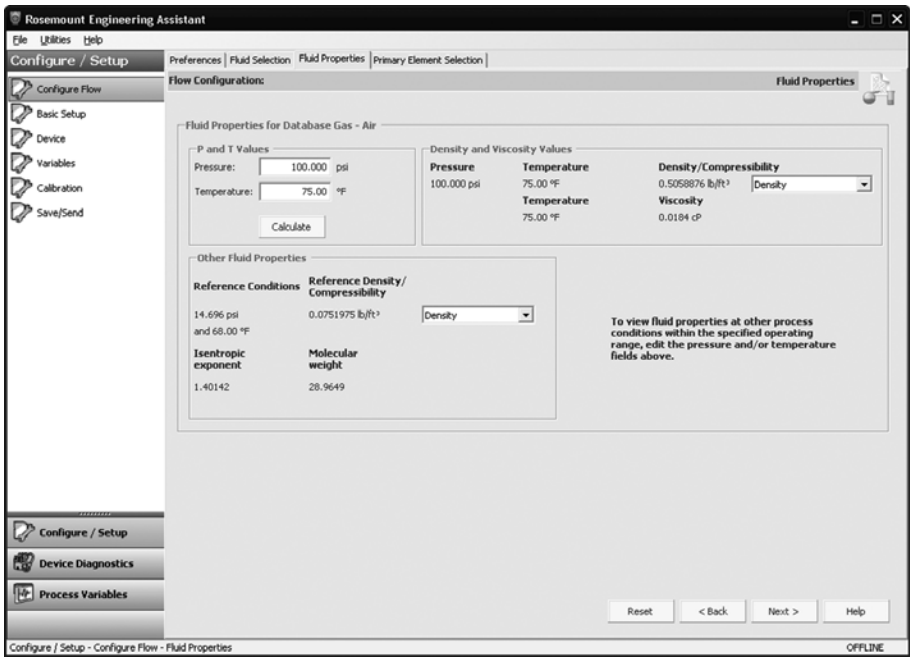

3.4.7 Primary element selection

The *Primary Element Selection* tab shown in Figure 3-9 allows the user to choose the primary element that will be used with the 3051S MultiVariable Transmitter. This database of primary elements includes:

- Rosemount proprietary elements such as the Annubar™ and the Conditioning Orifice Plate
- Standardized primary elements such as ASME, ISO, and AGA primary elements
- Other proprietary primary elements

Figure 3-9. Primary element selection tab

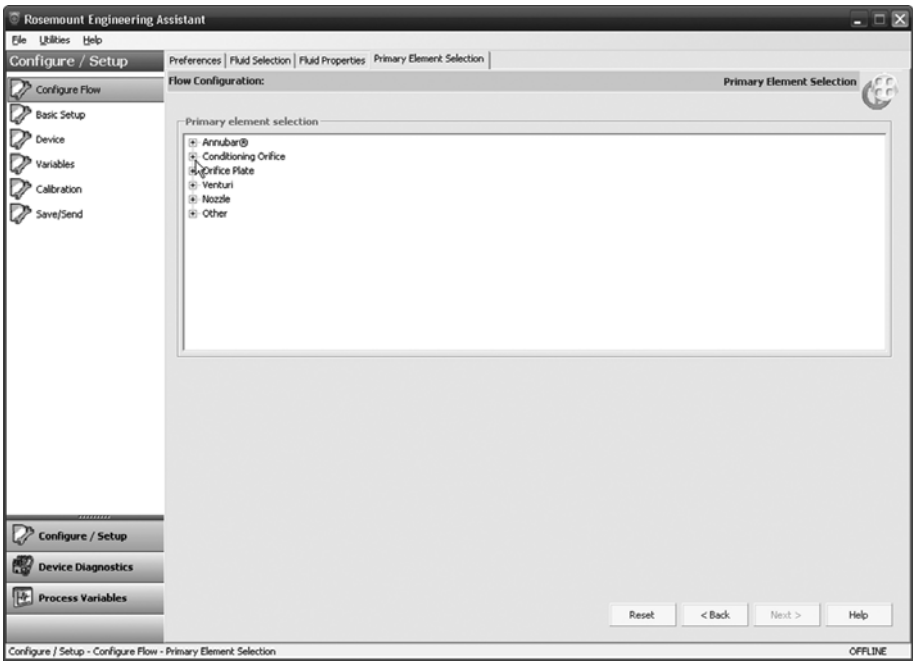

Continuing with the example configuration:

1. Expand the Conditioning Orifice Plate category.

Figure 3-10. Primary element selection tab - 405C/3051SFC

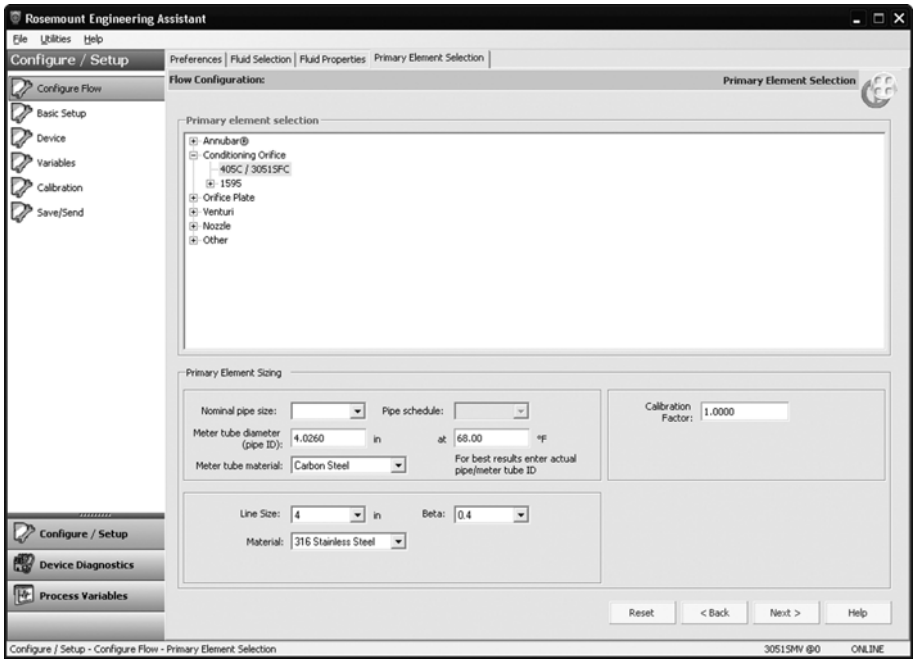

2. Select 405C/3051SFC.

3. Enter the *Measured Meter Tube Diameter (pipe ID)* at a *Reference Temperature*. If the meter tube diameter cannot be measured, select a *Nominal Pipe Size* and *Pipe Schedule* to input an estimated value for the meter tube diameter (U.S. units only).

4. If necessary, edit the *Meter Tube Material*.

5. Enter the *Line Size* and select the *Beta* of the Conditioning Orifice Plate. The required primary element sizing parameters will be different depending on what primary element is selected.

6. If necessary, select a *Primary Element Material* from the drop-down menu.

7. A *calibration factor* may be entered if a calibrated primary element is being used.

Note
A *Joule-Thomson Coefficient* can be enabled to compensate for the difference in process temperature between the orifice plate location and the process temperature measurement point. The Joule-Thomson Coefficient is available with ASME MFC-3M-2 (2004) or ISO 5167-2.2003 (E) orifice plates used with Database Gases, Superheated Steam, or AGA DCM/ISO Molar Composition Natural Gas. For more information on the Joule-Thomson Coefficient, please reference the appropriate orifice plate standard.

8. Click Next > to advance to the *Save / Send Configuration* tab.

Note
To be in compliance with appropriate national or international standards, beta ratios and differential producer diameters should be within the limits as listed in the applicable standards. The Engineering Assistant software will alert the user if a primary element value exceeds these limits, but will allow the user to proceed with the flow configuration.

3.4.8 Save / send

The *Save / Send Configuration* tab shown in Figure 3-11 allows the user to view, save, and send the configuration information to the 3051S MultiVariable Transmitter with the Fully Compensated Mass and Energy Flow Feature Board.

1. Review the information under the Flow Configuration heading and Device Configuration heading.

Note
For more information on device configuration, see "Basic device configuration" on page 31.

Figure 3-11. Save / send configuration tab (offline mode)

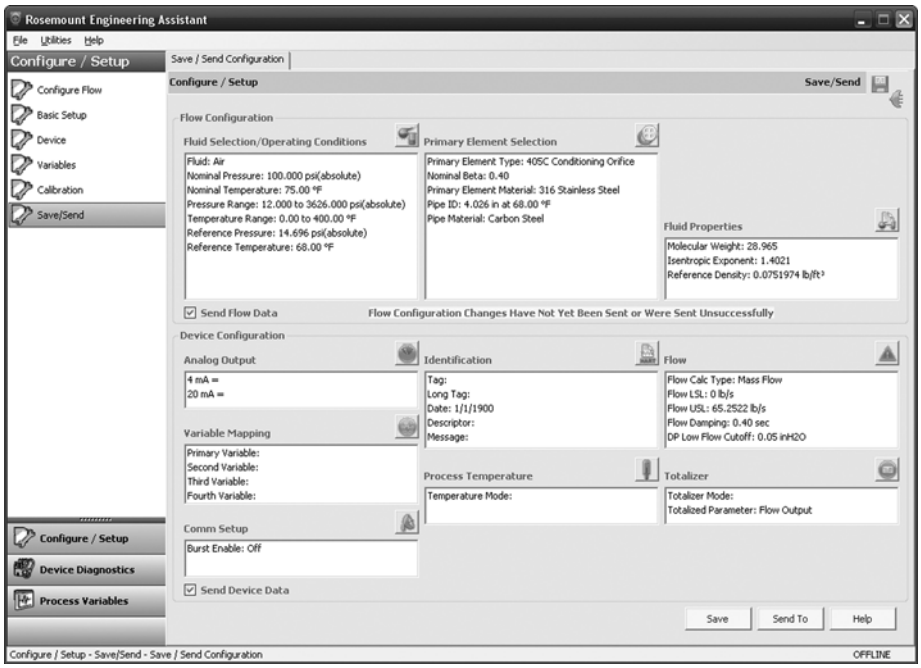

2. Click on the icon above each window to be taken to the appropriate screen to edit the configuration information. To return to the *Save / Send* tab, click Save / Send in the left menu.

3. When all information is correct, see "Sending a configuration in offline mode" on page 24 or "Sending a configuration in online mode" on page 25.

Note
The user will be notified if the configuration has been modified since it was last sent to the transmitter. A warning message will be shown to the right of the *Send Flow Data* and/or *Send Device Data* check boxes.

Sending a configuration in offline mode

1. To send the configuration, click the Send To button.

Note
The *Send Flow Data* and/or *Send Device Data* check boxes can be used to select what configuration data is sent to the transmitter. If the check box is unselected, the corresponding data will not be sent.

2. The Engineering Assistant Device Connection screen will appear, see Figure 3-12.

Figure 3-12. Engineering assistant device connection screen



3. Click the Search button located in the lower right hand corner of the screen. Engineering Assistant will begin to search for connected devices.
4. When the search is completed, choose the device to communicate with and click Send Configuration.
5. Once the configuration is finished being sent to the device, the user will be notified by a pop-up dialog box.
6. If finished with the configuration process, the user may close Engineering Assistant.

Note
After the configuration is sent to the device, saving the configuration file is recommended. For more information on saving a configuration file, see "Saving a configuration" on page 25.

Sending a configuration in online mode

1. To send the configuration, click the Send button. Once the configuration is finished being sent to the device, the user will be notified by a pop-up dialog box.
2. If finished with the configuration process, the user may close Engineering Assistant.

Note
After the configuration is sent to the device, saving the configuration file is recommended. For more information on saving a configuration file, see "Saving a configuration" on page 25.

Saving a configuration

1. To save the configuration, click the Save button.
2. Navigate to the location that the configuration file should be saved, give the file a name, and click Save. The configuration will be saved as a ".smv" file type.

Sending a saved configuration

1. To send a saved configuration, open Engineering Assistant in Offline mode and select File > Open.
2. Navigate to the saved .smv file to be sent. Click Open.
3. The Engineering Assistant Device Connection screen will appear, see Figure 3-12 on page 24.
4. Click the Search button located in the lower right hand corner of the screen. Engineering Assistant will begin to search for connected devices.
5. When the search is completed, choose the device to communicate with and click Send Configuration.
6. Once the configuration is finished being sent to the device, the user will be notified by a pop-up dialog box.
7. If finished with the configuration process, the user may close Engineering Assistant.

3.4.9 Other fluid configurations

Natural gas

Natural gas AGA No. 8 detail characterization or ISO 12213, molar composition flow configuration

1. Expand the Gas category.
2. Expand the Natural Gas category.
3. Select AGA Report No. 8 Detail Characterization Method or ISO 12213, Molar Composition Method.
4. Click Next > to proceed to the *Fluid Composition* tab. Figure 3-13 shows an example of the *Fluid Composition* tab for AGA Report No. 8 Detail Characterization Method. The ISO 12213, Molar Composition Method *Fluid Composition* tab will require the same information.

Figure 3-13. Fluid composition tab

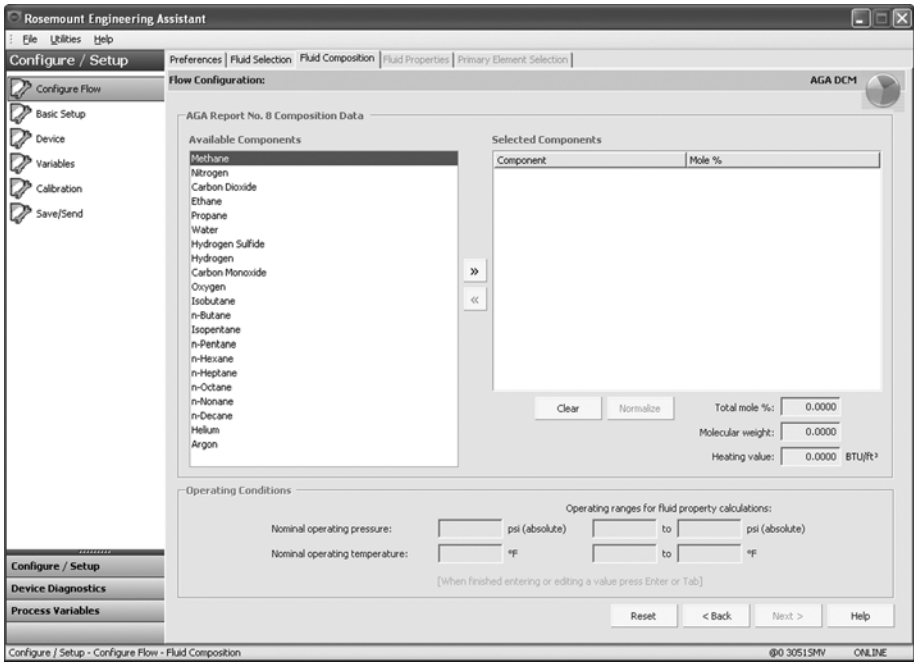

5. In the *Available Components* window, select the required components and move them into the *Selected Components* window using the >> button. The << button moves the components back to the *Available Components* window. The *Clear* button moves all components back to the *Available Components* window.
6. After all required components are in the *Selected Components* window, begin assigning the percent composition of each component in the *Mole %* column.

Note
These percent composition values should add to 100%. If they do not, click the Normalize button. This will adjust the mole percentages proportionally to a total of 100%.

7. Enter the *Nominal Operating Pressure*, then the *Nominal Operating Temperature* as the entry blanks become available. Engineering Assistant will automatically fill in suggested operating ranges. These values may be edited by the user.

Note
In order to comply with the AGA requirements the calculation accuracy must be within ±50 ppm (±0.005%). This is stated in AGA Report No. 3, Part 4, Section 4.3.1. The pressure and temperature operating ranges will be autofilled to comply with the standard.

8. Click Next >. This will bring the user to the *Fluid Properties* tab.

9. Proceed with the steps in "Fluid properties" on page 20.

Natural gas AGA No. 8 gross characterization flow configuration method 1, method 2, and natural gas ISO 12213, physical properties (SGERG 88) flow configuration

1. Expand the Gas category.

2. Select AGA No. 8 Gross Characterization Method 1, AGA No. 8 Gross Characterization Method 2, or ISO 12213, Physical Properties (SGERG 88).

3. Click Next to proceed to the *Fluid Composition* tab.

4. Enter the required data for the Natural Gas Characterization Method that was selected in Step 2. Required data for each method is listed in Table 3-3.

Table 3-3. Required and optional data for natural gas characterization methods

Characterization Method	Required Data	Optional Data
AGA Report No. 8 Gross Characterization Method 1	Relative Density(1) Mole Percent CO_2 Volumetric Gross Heating Value(2)	Mole Percent CO Mole Percent Hydrogen
AGA Report No. 8 Gross Characterization Method 2	Relative Density(1) Mole Percent CO_2 Mole Percent Nitrogen	Mole Percent CO Mole Percent Hydrogen
ISO 12213, Physical Properties (SGERG 88)	Relative Density(1) Mole Percent CO_2 Volumetric Gross Heating Value(2)	Mole Percent CO Mole Percent Hydrogen

(1) Reference conditions for the relative density are 60 °F (15.56 °C) and 14.73 psia (101.56 kPa).
(2) Reference conditions for the molar gross heating value are 60 °F (15.56 °C) and 14.73 psia (101.56 kPa) and reference conditions for molar density are 60 °F (15.56 °C) and 14.73 psia (101.56 kPa).

5. If appropriate, enter the optional data for the Natural Gas Characterization Method that was selected in Step 2. Optional data for each method is listed in Table 3-3.

6. Enter the *Nominal Operating Pressure*, then the *Nominal Operating Temperature* as the entry blanks come available. Engineering Assistant will automatically fill in suggested operating ranges. Note that these values may be edited by the user.

7. Click Next. This will open the *Fluid Properties* tab.

8. Proceed with the steps in "Fluid properties" on page 20.

Custom gas

The Custom Gas option should be used for fluids not in the database such as proprietary fluids or gas mixtures. To properly calculate the fluid properties, the compressibility factor or density needs to be entered at specific pressure and temperature values based on the operating ranges entered by the user. The pressure and temperature values may be edited as needed. The editable values are shown in fields with white backgrounds. For best performance, it is recommended that, whenever possible, the compressibility or density values be entered at the suggested pressure and temperature values.

To ease entering the compressibility/density or viscosity values, data can be copied from a spreadsheet and pasted into the grid. The recommended process is to copy the pressure and temperature values from the table on the Engineering Assistant screen to assist in computing the density or compressibility values. Once the compressibility or density values are computed, they may then be copied from the spreadsheet and pasted into the grid on the *Custom Gas Fluid Properties* tab.

1. Expand the Gas category.

2. Select the Custom Gas option.

3. Enter the *Nominal* and *Operating Pressure* and *Temperature Ranges*. Engineering Assistant will use these ranges to identify the pressure and temperature values at which the fluid properties are required.

4. Click Next to proceed to the *Custom Gas Fluid Properties* tab.

5. Enter the *Molecular Weight* of the Custom Gas. When the molecular weight of the gas is entered, the other data entry fields on the tab are enabled as shown in Figure 3-14.

6. Select either *Density* or *Compressibility* and enter data. Note that all pressure and temperature values may be edited except the minimum and maximum values. The minimum and maximum values were set on the *Fluid Selection* tab.

7. Enter the *Density* or *Compressibility* at reference conditions.

8. Enter the *Custom Gas Viscosity* at the given temperatures. Note that all temperature values may be edited except the minimum and maximum temperatures.

9. Enter the *Custom Gas Isentropic Exponent*.

10. Click Next to continue with the flow configuration on the *Primary Element Selection* tab.

11. Proceed with the steps in "Primary element selection" on page 21.

Figure 3-14. Custom gas fluid properties tab

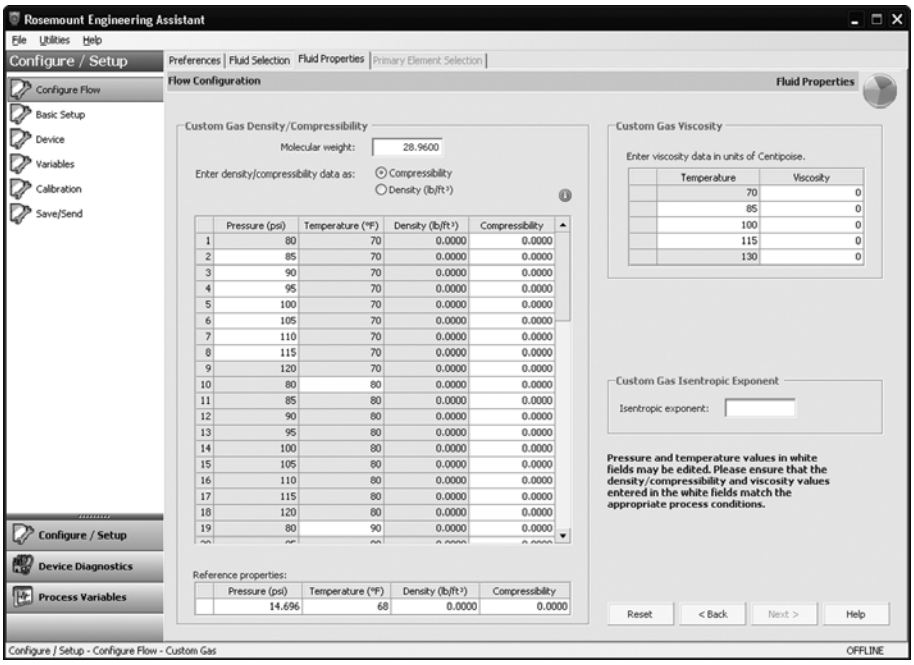

Custom liquid [Density (T)]

The Custom Liquid option should be used for fluids not in the database such as proprietary fluids.

1. Expand the Liquid category.

2. Expand the Custom Liquid category.

3. Select the Custom Liquid [Density (T)] option.

4. Enter the *Nominal* and *Operating Temperature Range*. Engineering Assistant will use this range to identify the temperature values at which the fluid properties are required.

5. Click Next to continue the flow configuration on the *Fluid Properties* tab.

6. Enter the *Custom Liquid Density* at the given temperatures. Note that all temperature values may be edited except the minimum and maximum temperatures.

7. Enter the *Reference Density* at the reference temperature.

8. Enter the *Custom Liquid Viscosity* at the given temperatures. Note that all temperature values may be edited except the minimum and maximum temperatures. The minimum and maximum values were set on the *Fluid Selection* tab.

9. Proceed with the steps in "Primary element selection" on page 21.

Figure 3-15. Custom liquid [Density (T)] fluid properties tab

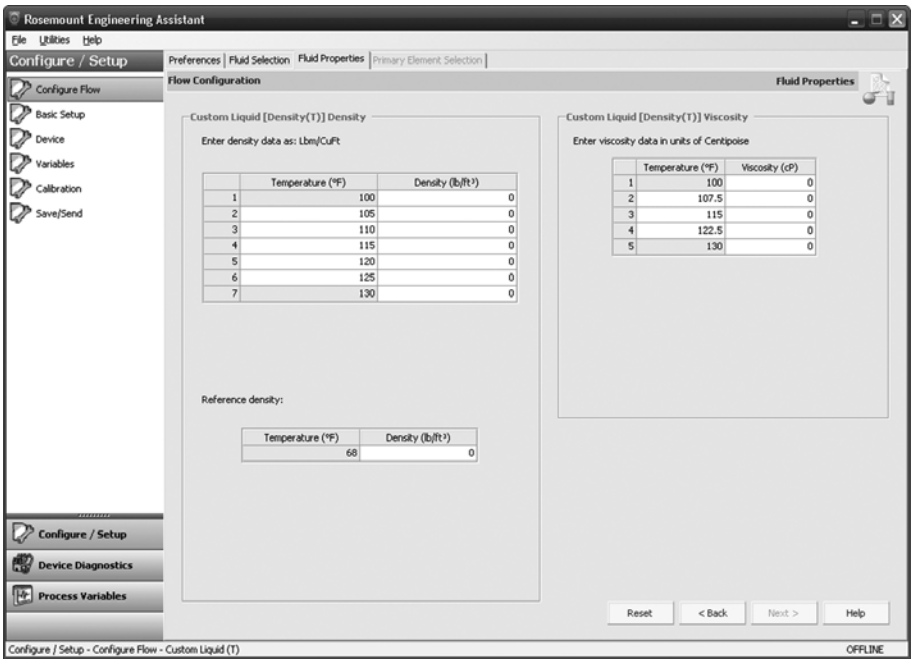

3.5 Basic device configuration

Mass and Energy Flow Fast Keys	1, 3
Direct Process Var. Output Fast Keys	1, 3

This section provides procedures for configuring the basic requirements to commission the 3051S MultiVariable Transmitter. The *Basic Setup* tab, shown in Figure 3-16, can be used to perform all of the required transmitter configuration. The complete list of 475 Fast Keys for basic setup are shown in Table 3-13 on page 69 and Table 3-14 on page 71.

Based on the configuration ordered, some measurements (i.e. static pressure, process temperature) and/or calculation types (i.e. mass, volumetric, and energy flow) may not be available for all fluid types. Available measurements and/or calculation types are determined by the MultiVariable Type and Measurement Type codes ordered. See "Ordering information" on page 27 for more information.

All screens in this section are shown for MultiVariable Type M (Fully Compensated Mass and Energy Flow) with Measurement Type 1 (Differential Pressure, Static Pressure, and Process Temperature). 475 Fast Keys are given for both MultiVariable Type M and P (Direct Process Variable Output) with Measurement Type 1. 475 Fast Keys and Screens for other MultiVariable Types and Measurement Types may vary.

Note
All screen shots in this section will be shown using AMS. Engineering Assistant screens are similar and the instructions shown here apply to both AMS and Engineering Assistant.

When using Engineering Assistant, a Reset Page button will be shown. In Online Mode, the Reset Page button will return all values on tab to the initial values received from the device before the start of the configuration. If editing a previously saved configuration, the Reset Page button will return all values on tab to those that were last saved. If starting a new configuration, all entered values on tab will be erased.

⚠ When information is edited on any AMS tab, it will be highlighted in yellow. Edited information is not sent to the transmitter until the Apply or OK button is clicked.

Units of measure

If a unit of measure is edited and the Apply button is clicked, the unit of measure will be changed in the device memory and on screen, but the value may take up to 30 seconds to be updated on the AMS screen.

Figure 3-16. Basicsetup tab

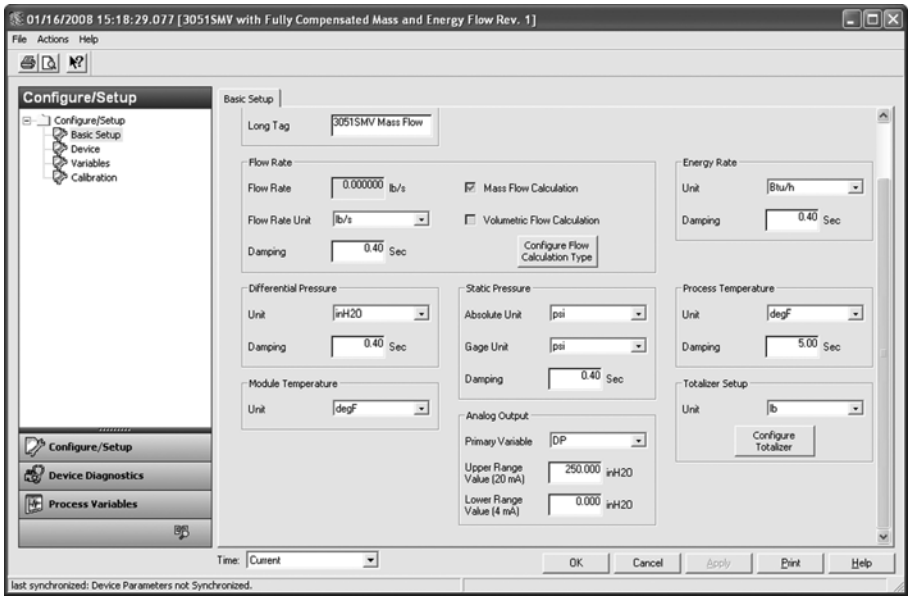

1. Verify the *Device Tag* information. The tag information is used to identify specific transmitters on the 4-20 mA loop. This tag information may be edited.

2. Under the *Flow Rate* heading (Fully Compensated Mass and Energy Flow Feature Board only), the type of flow calculation (mass or volumetric) is displayed by the indicators on the right hand side of the box. The *Flow Calculation Type* may be edited by clicking on the Configure Flow Calculation Type button. The *Damping* and *Units* of the *Flow Rate* may also be edited under this heading.

Note
The flow calculation within the device uses undamped process variables. Flow rate damping is set independently of measured process variables.

3. Under the *Energy Rate* heading (Fully Compensated Mass and Energy Flow Feature Board only), the *Units* and *Damping* for the *Energy Rate* may be edited.

Note
Energy rate calculations are only available for steam and natural gas.

The energy rate calculation within the device uses undamped process variables. Energy rate damping is set independently of flow rate damping or measured process variables.

4. Under the *Differential Pressure* heading, the *Units* and *Damping* for the *Differential Pressure* may be edited.

5. Under the *Static Pressure* heading, the *Units* for both absolute and gage pressure and static pressure *Damping* may be edited.

Note
Both absolute and gage pressure are available as variables. The type of transmitter ordered will determine which variable is measured and which is calculated based on the user defined atmospheric pressure. For more information on configuring the atmospheric pressure, see "Static pressure" on page 59. Since only one of the static pressures is actually being measured, there is a single damping setting for both variables which may be edited under the *Static Pressure* heading.

6. Under the *Process Temperature* heading, the *Units* and *Damping* for the *Process Temperature* may be edited.

7. Under the *Module Temperature* heading, the *Units* for the sensor module temperature may be set. The sensor module temperature measurement is taken within the module, near the differential pressure and/or static pressure sensors and can be used to control heat tracing or diagnose device overheating.

8. Under the *Analog Output* heading, the primary variable can be selected from the drop down menu and the upper and lower range values (4 and 20 mA points) for the primary variable may be edited.

9. Under the *Totalizer* heading (Fully Compensated Mass and Energy Flow Feature Board only), the Totalizer can be configured by clicking on the Configure Totalizer button. This button allows the user to select the variable to be totalized. The Totalizer *Units* may also be edited under this heading.

3.6 Detailed device configuration

3.6.1 Model identification

Mass and Energy Flow Fast Keys	1, 3, 5
Direct Process Var. Output Fast Keys	1, 3, 5

The *Identification* tab displays the device identification information on one screen. The fields with white backgrounds may be edited by the user.

Figure 3-17. Device - Identification Tab

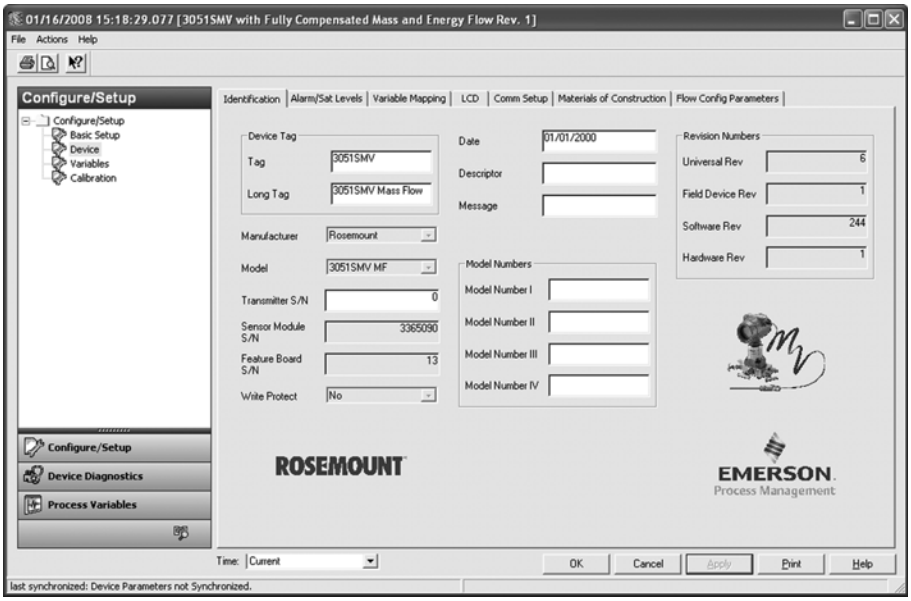

3.6.2 Alarm and saturation

The 3051S MultiVariable Transmitter automatically and continuously performs self-diagnostic routines. If the self-diagnostic routines detect a failure, the transmitter drives the output to the configured alarm value. The transmitter will also drive the output to configured saturation values if the primary variable goes outside the 4-20 mA range values.

The alarm and saturation settings can be configured using Engineering Assistant, AMS, or a 475. See "Alarm and saturation level configuration" on page 35 for more information. The alarm direction can be configured using the hardware switch on the feature board. See "Configure Security and Alarm" on page 4 for more information on the hardware switch.

The 3051S MultiVariable Transmitter has three options for alarm and saturation levels:

- Rosemount (Standard), see Table 3-4.
- NAMUR, see Table 3-5.
- Custom (user-defined), see Table 3-6.

Table 3-4. Rosemount (standard) alarm and saturation values

Level	Saturation	Alarm
Low	3.9 mA	≤ 3.75 mA
High	20.8 mA	≥ 21.75 mA

Table 3-5. NAMUR-Compliant alarm and saturation values

Level	Saturation	Alarm
Low	3.8 mA	≤ 3.6 mA
High	20.5 mA	≥ 22.5 mA

Table 3-6. Custom alarm and saturation values

Level	Saturation	Alarm
Low	3.7 mA — 3.9 mA	3.6 mA — 3.8 mA
High	20.1 mA — 22.9 mA	20.2 mA — 23.0 mA

The following limitations exist for custom levels:

- Low alarm level must be less than the low saturation level
- High alarm level must be higher than the high saturation level
- Alarm and saturation levels must be separated by at least 0.1 mA

Alarm and saturation level configuration

Mass and Energy Flow Fast Keys	1, 4, 2, 6, 6
Direct Process Var. Output Fast Keys	1, 4, 2, 6, 6

The *Alarm/Sat Levels* tab allows the Alarm and Saturation Levels to be configured. To change alarm/saturation level settings, click on the Config Alarm/Sat Levels button.

Figure 3-18. Device - alarm/sat levels tab

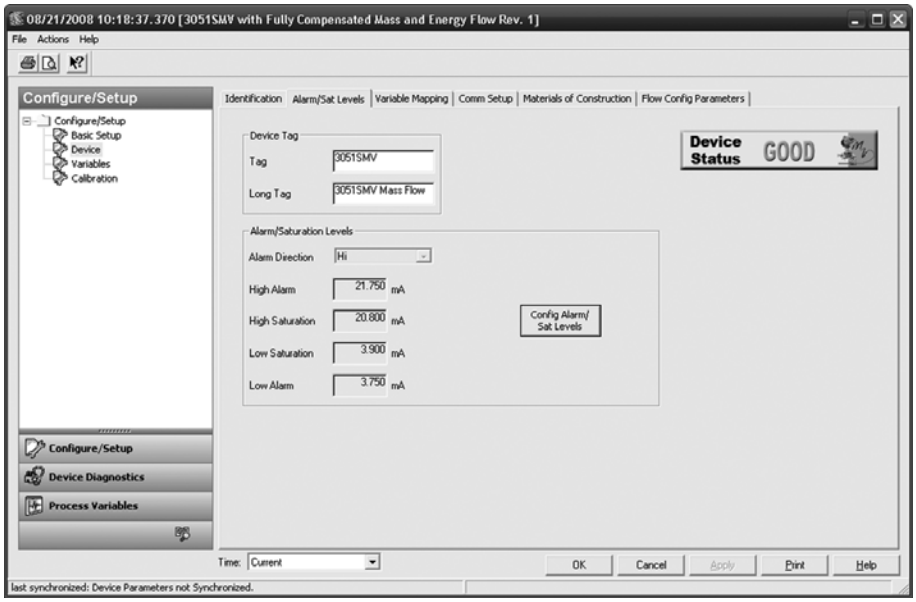

⚠ Alarm level verification

The transmitter alarm level should be verified before returning the transmitter to service if alarm and saturation levels are changed.

This feature is also useful in testing the reaction of the control system to a transmitter in an alarm state. To verify the transmitter alarm values, perform a loop test and set the transmitter output to the alarm value (see Table 3-4, Table 3-5, and Table 3-6 on page 35, and "Analog Output Loop Test" on page 12).

Variable saturation behavior

The analog output of the 3051S MultiVariable may respond differently based on which measurement goes outside the sensor limits. This response will also depend on the device configuration. Table 3-7 lists the behaviors of the analog output under different conditions.

Table 3-7. Variable saturation behavior

Primary Variable	Action	Analog Output Behavior
Flow or Energy Flow	Differential Pressure goes outside the sensor limits	Analog output goes to high or low saturation
Flow or Energy Flow	Absolute Pressure or Gage Pressure goes outside the sensor limits	Analog output does not saturate
Flow or Energy Flow	Process Temperature goes outside the user defined sensor limits	Temperature Mode is Normal: Analog output goes into high or low alarm. Temperature Mode is Backup: The Process Temp will go into backup mode and be fixed at the user defined value. Analog output will not saturate or go into alarm.
DP	Differential Pressure goes outside the sensor limits	Analog output goes to high or low saturation
AP or GP	Absolute Pressure or Gage Pressure goes outside the sensor limits	Analog output goes to high or low saturation
Process Temp	Process Temperature goes outside the user defined sensor limits	Direct Process Variable Output: Analog output goes to high or low saturation Mass and Energy Flow: Analog output goes to high or low alarm

3.6.3 Variable mapping

Mass and Energy Flow Fast Keys	1, 4, 3, 4
Direct Process Var. Output Fast Keys	1, 4, 3, 4

The *Variable Mapping* tab is used to define which process variable will be mapped to each HART variable. The primary variable represents the 4 to 20 mA analog output signal while the 2nd, 3rd, and 4th variables are digital. To edit the variable assignments, select the appropriate process variables from the drop-down menus and click Apply.

Figure 3-19. Device - variable mapping tab

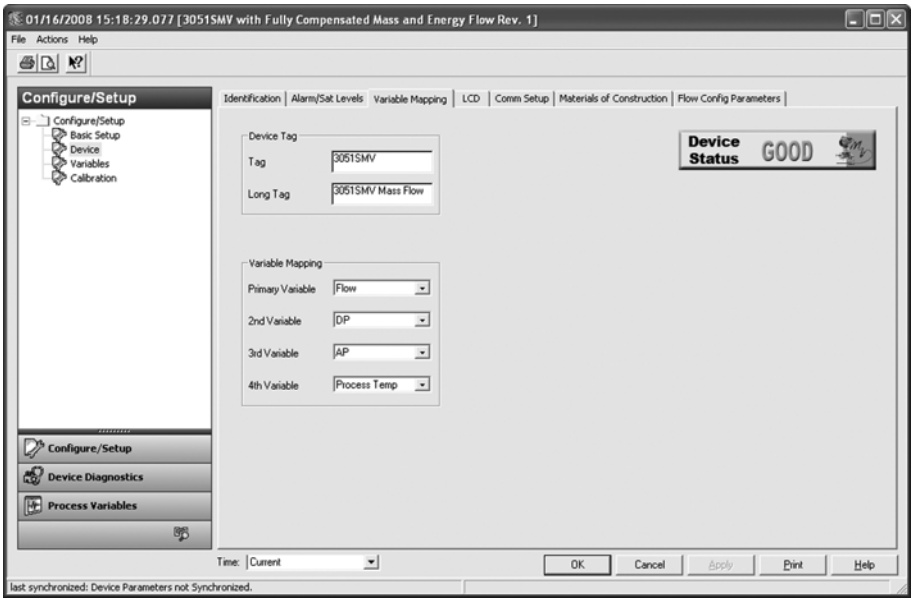

3.6.4 LCD display

Mass and Energy Flow Fast Keys	1, 3, 8
Direct Process Var. Output Fast Keys	1, 3, 8

The LCD features a four-line display and a 0-100% scaled bar graph. The first line of five characters displays the output description, the second line of seven digits displays the actual value, and the third line of six characters displays engineering units. The fourth line displays “Error” when there is a problem detected with the transmitter. The LCD can also display diagnostic messages. These diagnostic messages are listed in Table 5-1 on page 2.

The *LCD* tab allows the user to configure which variables will be shown on the LCD. Click the check box next to each variable to select a variable for display. The transmitter will scroll through the selected variables, showing each for three seconds.

Figure 3-20. Device - LCD tab

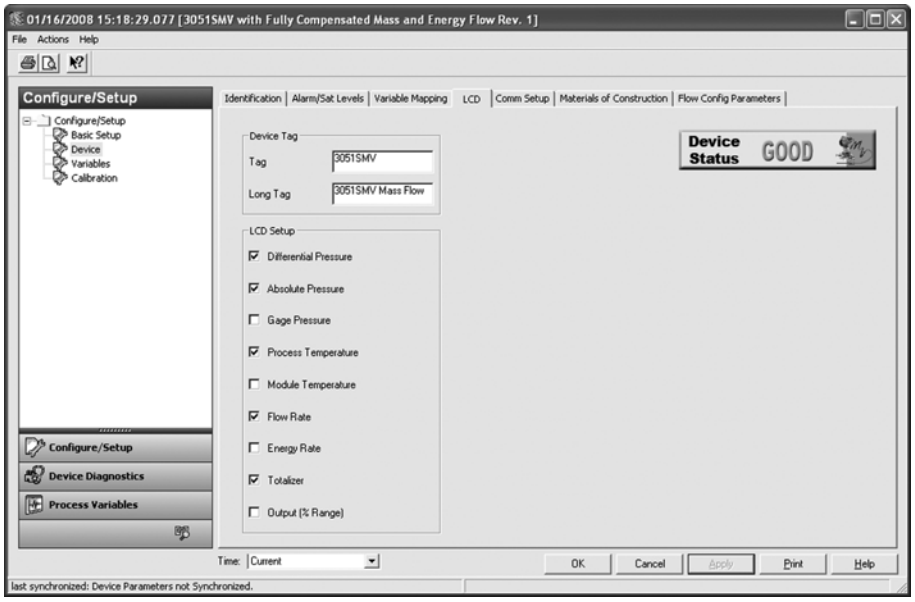

3.6.5 Communication setup

Mass and Energy Flow Fast Keys	1, 4, 3, 3
Direct Process Var. Output Fast Keys	1, 4, 3, 3

The *Comm Setup* tab allows the settings for burst mode and multidrop communications to be configured.

Figure 3-21. Device - comm setup tab

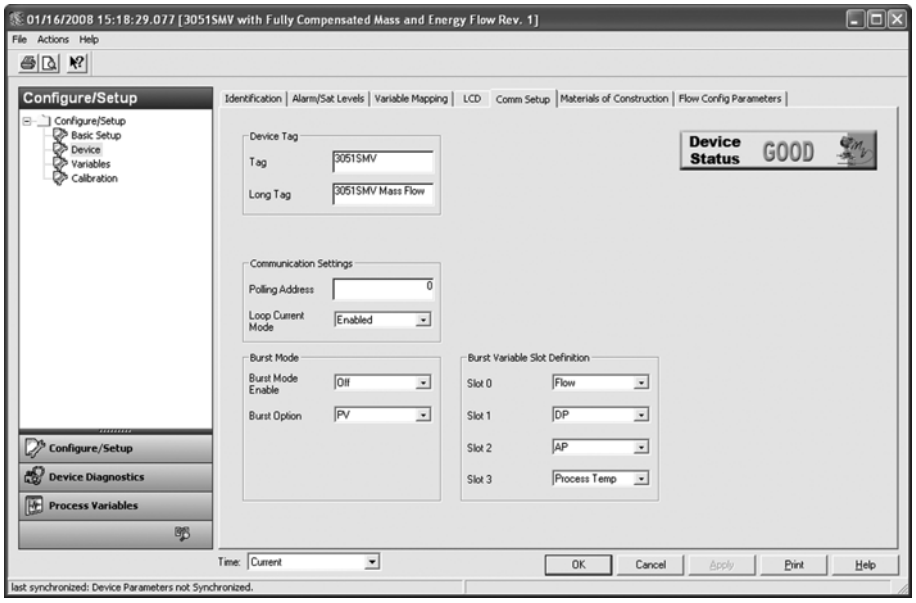

Burst mode

When *Burst Mode Enable* is set to on, the 3051S MultiVariable Transmitter sends up to four HART variables to the control system without the control system polling for information from the transmitter.

When operating with *Burst Mode Enable* set to on, the transmitter will continue to output a 4-20 mA analog signal. Because the HART protocol features simultaneous digital and analog data transmission, the analog value can drive other equipment in the loop while the control system is receiving the digital information. Burst mode applies only to the transmission of dynamic data (process variables in engineering units, primary variable in percent of range, and/or analog output), and does not affect the way other transmitter data is accessed.

Access to information that is not burst can be obtained through the normal poll/response method of HART communication. A 475 Field Communicator, AMS, Engineering Assistant, or the control system may request any of the information that is normally available while the transmitter is in burst mode.

Enabling burst mode

Mass and Energy Flow Fast Keys	1, 4, 3, 3, 3
Direct Process Var. Output Fast Keys	1, 4, 3, 3, 3

To enable burst mode, select On from the *Burst Mode Enable* drop-down menu under the *Burst Mode* heading.

Choosing a burst option

Mass and Energy Flow Fast Keys	1, 4, 3, 3, 4
Direct Process Var. Output Fast Keys	1, 4, 3, 3, 4

This parameter selects the information to be burst. Make a selection from the *Burst Option* drop-down menu under the *Burst Mode* heading. The *Dyn vars/current* option is the most common, because it is used to communicate with the 333 HART Tri-Loop.

Table 3-8. Burst Options

HART Command	Burst Option	Description
1	PV	Primary variable
2	% range/current	Percent of range and miiliamp output
3	Dyn vars/current	All process variables and milliamp output
9	Device vars w/ status	Burst variables and status information
33	Device variables	Burst variables

Choosing Burst Variable Slot Definition

Mass and Energy Flow Fast Keys	1, 4, 3, 3, 5
Direct Process Var. Output Fast Keys	1, 4, 3, 3, 5

If the burst option *Device vars w/ status* or *Device variables* is selected, the user may choose the four variables that will be burst. These are defined in slots 1-4 under the *Burst Variable Slot Definitions* heading. The variables defined in slots 1-4 can be different than the variables mapped to the primary, 2nd, 3rd, and 4th variable outputs.

Multidrop communication

Multidropping transmitters refers to the connection of several transmitters to a single communications transmission line.

Note
Figure 3-22 shows a typical multidrop network. This figure is not intended as an installation diagram.

Communication between the host and the transmitters takes place digitally with the analog output of the transmitters deactivated.

Note
⚠ A transmitter in multidrop mode with *Loop Current Mode* disabled has the analog output fixed at 4 mA.

Figure 3-22. Typical multidrop network

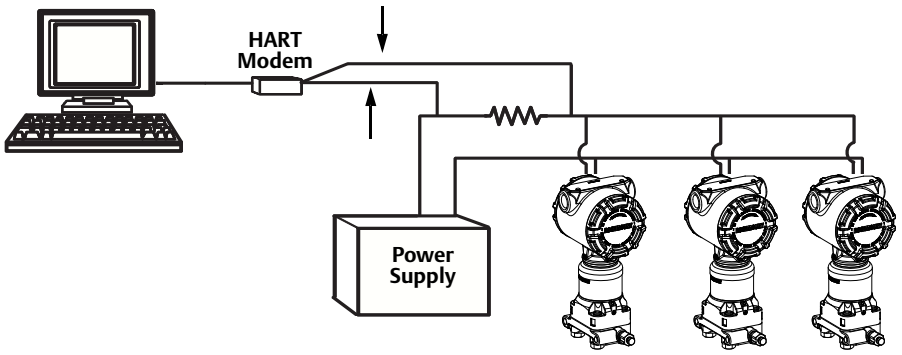

Enable multidrop communication

Mass and Energy Flow Fast Keys	1, 4, 3, 3, 1
Direct Process Var. Output Fast Keys	1, 4, 3, 3, 1

The 3051S MultiVariable Transmitter is set to address zero (0) at the factory, which allows operation in the standard point-to-point manner with a 4–20 mA output signal. To activate multidrop communication, the transmitter address must be changed to 1–15 for HART 5 hosts or 1-63 for HART 6 hosts. This change deactivates the 4–20 mA analog output, sending it to a fixed value of 4 mA. It also disables the failure alarm signal, which is controlled by the HI/LO alarm switch position on the feature board. Failure signals in multidropped transmitters are communicated through HART messages.

Loop current mode

Mass and Energy Flow Fast Keys	1, 4, 3, 3, 2
Direct Process Var. Output Fast Keys	1, 4, 3, 3, 2

When using multidrop communication, the loop current mode drop-down menu defines how the 4-20 mA analog output behaves. When loop current mode is disabled, the analog output will be fixed at 4 mA. When the loop current mode is enabled, the analog output will follow the primary variable.

3.6.6 Materials of construction

Mass and Energy Flow Fast Keys	1, 4, 4, 2
Direct Process Var. Output Fast Keys	1, 4, 4, 2

The *Materials of Construction* tab allows the materials of construction, remote seal, and equipped sensor information to be viewed. The parameters shown in white boxes may be edited by the user, but do not affect the operation of the device.

Figure 3-23. Device - materials of construction tab

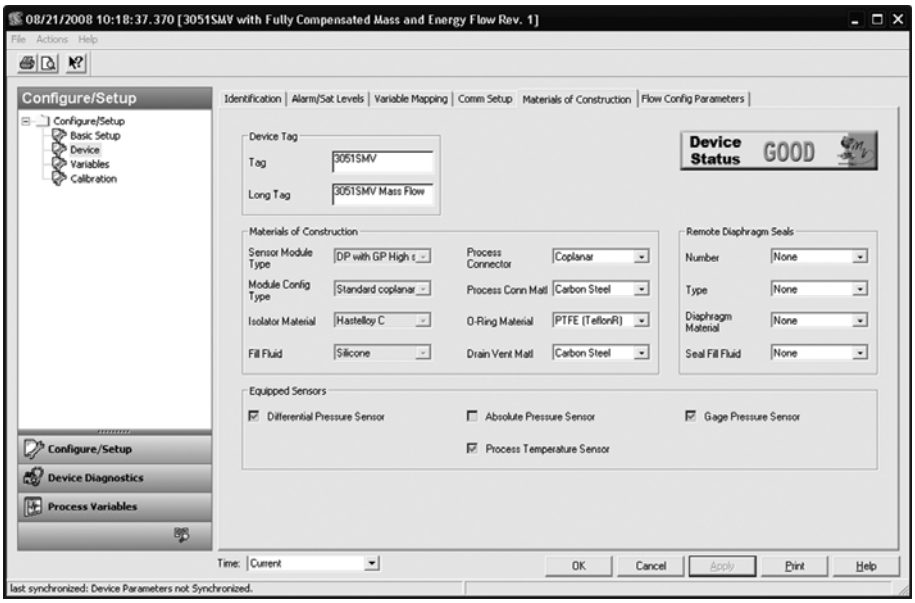

3.6.7 Flow configuration parameters

Mass and Energy Flow Fast Keys	1, 4, 4, 3

(Fully Compensated Mass and Energy Flow Feature Board only):

The *Flow Config Parameters* tab allows the *Process Fluid*, *Primary Element* type and *Pipe Diameter* used in the flow configuration to be viewed. These values may only be edited using Engineering Assistant version 6.1 or later.

Figure 3-24. Device - flow config parameters tab

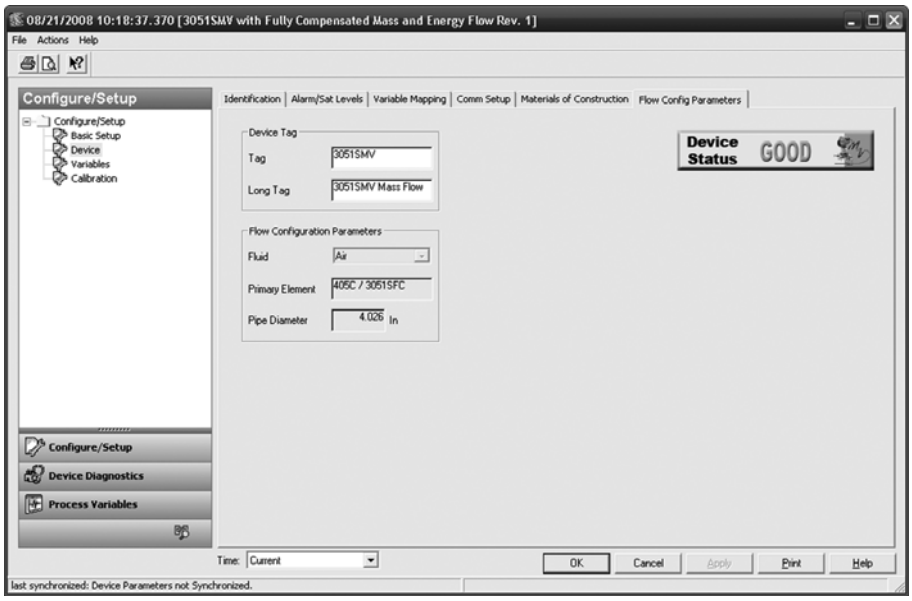

3.7 Variable configuration

3.7.1 Flow rate

Mass and Energy Flow Fast Keys	1, 4, 1, 1

(Fully Compensated Mass and Energy Flow Feature Board only):

The *Flow* tab is used to configure the settings associated with the Flow Variable. Fluid and primary element information which defines the flow calculation is configured using Engineering Assistant.

Figure 3-25. Variables - flow tab

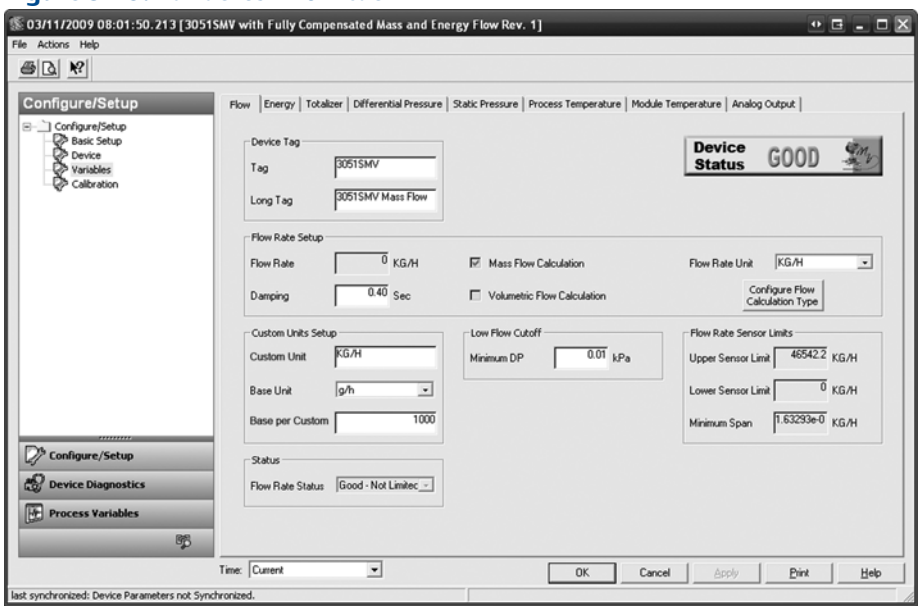

1. Under the *Flow Rate Setup* heading, the type of flow calculation is indicated by the check boxes next to either *Mass Flow Calculation* or *Volumetric Flow Calculation*. To edit the flow calculation type, click on the Configure Flow Calculation Type button.

2. Edit the *Flow Rate Units* and *Damping* value as needed. The flow calculation within the device uses undamped process variables. Flow rate damping is set independently of the measured process variables.

Note
If the flow calculation type is changed, the totalizer will be stopped and reset automatically.

3. Under the *Low Flow Cutoff* heading, edit the current *Minimum DP Value* as needed. The unit for this value is the user-selected DP unit. If the measured DP value is less than the minimum DP value, the transmitter will calculate the *Flow Rate* value to be zero.

4. The *Sensor Limits* and *Minimum Span* can be viewed under the *Flow Rate Sensor Limits* heading.

Note
If the flow rate is configured as the primary variable and is being output via the 4-20 mA signal, verify the 4-20 mA range (LRV and URV) after completing the custom unit configuration. For more information on verifying the 4-20 mA range, see "Basic device configuration" on page 31.

Follow these steps to configure a custom unit:

a. Custom Unit: Enter the desired custom unit label to be displayed for the flow rate. Up to five characters including letters, numbers, and symbols can be entered in the custom unit field.

Note
It is recommended that the Custom Unit be entered in upper case letters. If lower case letters are entered, the LCD will display upper case letters. Additionally, the following special characters are recognized by the LCD Display: hyphens ("-"), percent symbols ("%"), asterisks ("*"), forward slashes ("/") and spaces. Any other character entered for the Custom Unit will be displayed as an asterisk ("*") on the LCD Display. The following warning will be returned indicating these changes: "Custom Unit contains characters that will display in upper case or asterisks on LCD. The DCS will display as entered."

b. Base Unit: From the drop-down menu, select a base unit to be used for the custom unit relationship.

c. Base per Custom: Enter a numeric value that represents the number of base units per one custom unit. The 3051S MultiVariable transmitter uses the following convention:

$$\text{Base per Custom} = \frac{\text{Number of Base Units}}{\text{1 Custom Unit}}$$

Example:

Custom Unit: kg
Base Unit: g

Because 1 kg (Kilogram) = 1000 g (Grams)

$$\text{Base per Custom} = \frac{\text{Number of Base Units}}{\text{1 Custom Unit}} = \frac{1000 \cdot g}{1 \cdot kg} = 1000$$

The values of Base per Custom for common flow units are shown in Table 3-9.

d. Click Apply.

e. Flow Rate Unit: From the drop-down menu, select the custom unit that was created in Step b.

Note
The custom unit may not be available as a selection in the *Flow Rate Unit* drop-down menu until the drop-down menu is refreshed. To refresh the drop-down menu, navigate to the *Basic Setup* tab and then return to the *Variables - Flow* tab.

Table 3-9. Common custom units - Flow

Custom Unit	Base Unit	Base per Custom
Barrels per Minute (BBL/M)	bbl/h	60
Cubic Meters per Day (CUM/D)	Cum/h	0.041667
Millions of Cubic Meters per Day (MMCMD)	Cum/h	41666.7
Millions of Gallons per Day (MGD)	gal/d	1000000
Millions of Liters per Day (MML/D)	L/h	41666.7
Millions of Standard Cubic Feet per Day (MMCFD)	StdCuft/min	694.444
Normal Cubic Meters per Day (NCM/D)	NmlCum/h	0.041667
Normal Cubic Meters per Minute (NCM/M)	NmlCum/h	60
Short Tons per Day (STOND)	lb/d	2000
Short Tons per Hour (STONH)	lb/h	2000
Standard Cubic Feet per Day (SCF/D)	StdCuft/min	0.000694
Standard Cubic Feet per Hour (SCF/H)	StdCuft/min	0.016667
Standard Cubic Feet per Second (SCF/S)	StdCuft/min	60
Standard Cubic Meters per Day (SCM/D)	StdCum/h	0.041667
Thousands of Gallons per Day (KGD)	gal/d	1000
Thousands of Pounds per Hour (KLB/H)	lb/h	1000
Thousands of Standard Cubic Feet per Day (KSCFD)	StdCuft/min	0.694444
Thousands of Standard Cubic Feet per Hour (KSCFH)	StdCuft/min	16.6666

If conversion factor tables or internet search engines are used to determine the Base per Custom value, it is important to enter the Custom Unit in the “From” field and the Base Unit in the “To” Field. An example of this is shown below.

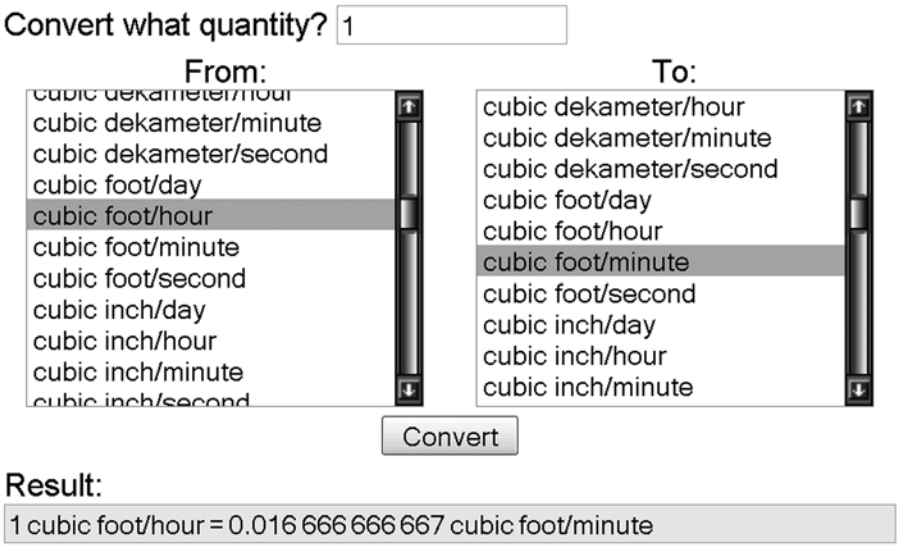

To calculate the Base per Custom value for a custom unit not shown in Table 3-9, see one of the following examples:

- Mass/Volume Conversion Example: page 46
- Time Conversion Example: page 47
- Mass/Volume and Time Conversion Example: page 48

Mass/volume conversion example:

To find the Base per Custom relationship for a custom unit of kilograms per hour (kg/h) and a base unit of grams per hour (g/h), input the following:

Custom Unit = kg/h
Base Unit = g/h

Because:
1 kg (Kilogram) = 1000 g (Grams)

Then:

$$1\ kg/h = \frac{1 \cdot kg}{1 \cdot h} \times \frac{1000 \cdot g}{1 \cdot kg} = 1000\ g/h$$

1 kg/h = 1000 g/h

Therefore:

$$\text{Base per Custom} = \frac{\text{Number of Base Units}}{1\ \text{Custom Unit}} = \frac{1000 \cdot g/h}{1 \cdot kg/h} = 1000$$

Figure 3-26. Flow rate custom units - mass/volume conversion example

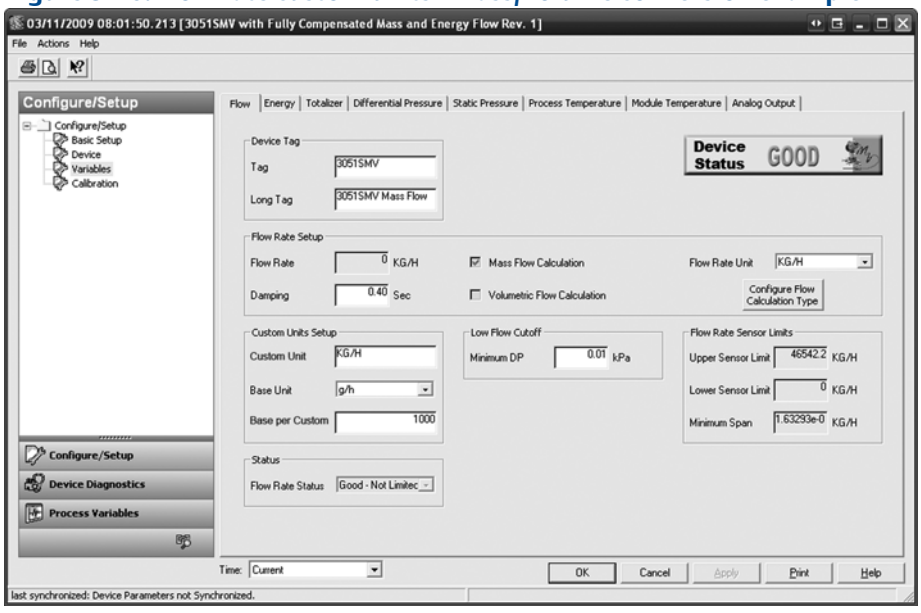

Time conversion example:

To find the Base per Custom relationship for a custom unit of standard cubic feet per hour (scf/h) and a base unit of standard cubic feet per minute (StdCuft/min), input the following:

Custom Unit = scf/h
Base Unit = StdCuft/min

Because:
1 h (Hour) = 60 min (Minutes)

Then:

$$1\ scf/h = \frac{1 \cdot scf}{1 \cdot h} \times \frac{1 \cdot h}{60 \cdot min} = 0.016667\ StdCuft/min$$

1 scf/h = 0.016667 StdCuft/min

Therefore:

$$\text{Base per Custom} = \frac{\text{Number of Base Units}}{1\ \text{Custom Unit}} = \frac{0.016667 \cdot StdCuft/min}{1 \cdot scf/h} = 0.016667$$

Figure 3-27. Flow rate custom units - Time conversion example

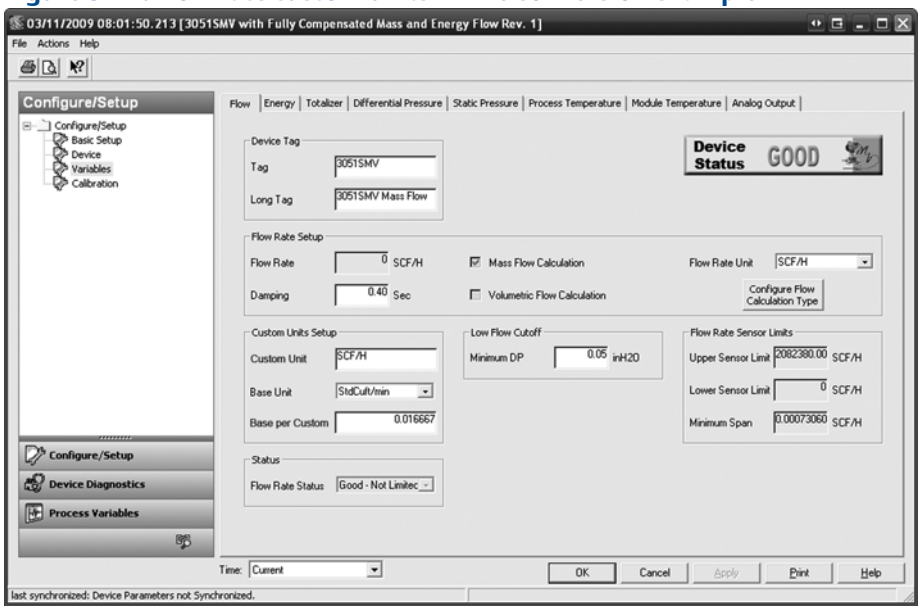

Mass/volume and time conversion example:

To find the Base per Custom relationship for a custom unit of standard millions of standard cubic feet per day (mmcfd) and a base unit of standard cubic feet per minute (StdCuft/min), input the following:

Custom Unit = mmcfd
Base Unit = StdCuft/min

Because:
1 mmcf (Millions of Standard Cubic Feet) = 1000000 StdCuft (Standard Cubic Feet) and

1 d (Day) = 1440 min (Minutes)

Then:

$$1\ \text{mmcfd} = \frac{1 \cdot \text{mmcf}}{1 \cdot \text{d}} \times \frac{1000000 \cdot \text{StdCuft}}{1 \cdot \text{mmcf}} \times \frac{1 \cdot \text{d}}{1440 \cdot \text{min}} = 694.444\ \text{StdCuft/min}$$

1 mmcfd = 694.444 StdCuft/min

Therefore:

$$\text{Base per Custom} = \frac{\text{Number of Base Units}}{1\ \text{Custom Unit}} = \frac{694.444 \cdot \text{StdCuft/min}}{1 \cdot \text{mmcfd}} = 694.444$$

Figure 3-28. Flow rate custom units - mass/volume and time conversion example

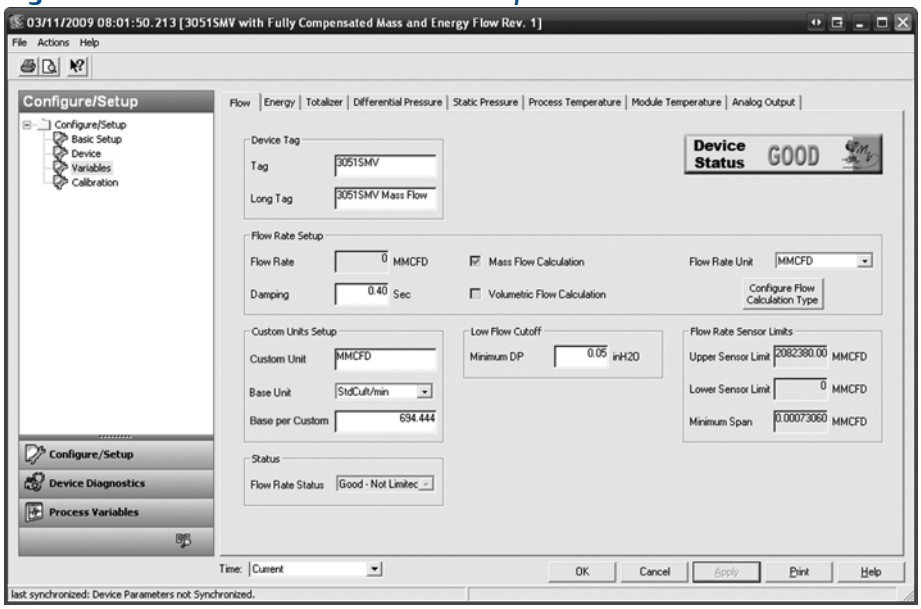

Under the *Custom Units Setup* heading, the user may configure a custom unit for the flow rate measurement. Custom units allow the flow rate to be displayed in units of measure that are not standard in the 3051S MultiVariable.

3.7.2 Energy rate

Mass and Energy Flow Fast Keys	1, 4, 1, 2

(Fully Compensated Mass and Energy Flow Feature Board only):

Note
Energy Rate calculations are only available for certain fluid types.

The *Energy* tab allows the user to configure the settings associated with the energy flow.

1. Under the *Energy Rate Setup* heading, edit the Energy Rate *Units* and *Damping* values as needed. The energy rate calculation within the device uses undamped process variables. Energy rate damping is set independently of flow rate damping and measured process variables.

2. Under the *Custom Units Setup* heading, the user may configure a custom unit for the energy rate measurement. Custom units allow the energy rate to be displayed in units of measure that are not standard in the 3051S MultiVariable.

Note
If the energy rate is configured as the primary variable and is being output via the 4-20 mA signal, verify the 4-20 mA range (LRV and URV) after completing the custom unit configuration. For more information on verifying the 4-20 mA range, see "Basic device configuration" on page 31.

Follow these steps to configure a custom unit:

a. Custom Unit: Enter the desired custom unit label to be displayed for the energy rate. Up to five characters including letters, numbers, and symbols can be entered in the custom unit field.

Note
It is recommended that the Custom Unit be entered in upper case letters. If lower case letters are entered, the LCD will display upper case letters. Additionally, the following special characters are recognized by the LCD Display: hyphens ("-"), percent symbols ("%"), asterisks ("*"), forward slashes ("/") and spaces. Any other character entered for the Custom Unit will be displayed as an asterisk ("*") on the LCD Display. The following warning will be returned indicating these changes: "Custom Unit contains characters that will display in upper case or asterisks on LCD. The DCS will display as entered."

b. Base Unit: From the drop-down menu, select a base unit to be used for the custom unit relationship.

c. Base per Custom: Enter a numeric value that represents the number of base units per one custom unit. The 3051S MultiVariable transmitter uses the following convention:

$$\text{Base per Custom} = \frac{\text{Number of Base Units}}{\text{1 Custom Unit}}$$

Example:

Custom Unit: kg
Base Unit: g

Because 1 kg (Kilogram) = 1000 g (Grams)

$$\text{Base per Custom} = \frac{\text{Number of Base Units}}{1 \text{ Custom Unit}} = \frac{1000 \cdot g}{1 \cdot kg} = 1000$$

The values of Base per Custom for common energy units are shown in Table 3-10.

d. Click Apply.
e. Energy Rate Unit: From the drop-down menu, select the custom unit that was created in Step b.

Note
The custom unit may not be available as a selection in the *Energy Rate Unit* drop-down menu until the drop-down menu is refreshed. To refresh the drop-down menu, navigate to the *Basic Setup* tab and then return to the *Variables - Energy* tab.

Table 3-10. Common custom units - energy flow

Custom Unit	Base Unit	Base per Custom
BTU per Day (BTU/D)	Btu/h	0.041667
BTU per Minute (BTU/M)	Btu/h	60
Megajoules per Day (MJ/D)	MJ/h	0.041667
Megajoules per Minute (MJ/M)	MJ/h	60
Thousands of BTU per Day (KBTUD)	Btu/h	41.6667
Thousands of BTU per Hour (KBTUH)	Btu/h	1000

If conversion factor tables or internet search engines are used to determine the Base per Custom value, it is important to enter the Custom Unit in the “From” field and the Base Unit in the “To” Field. An example of this is shown below.

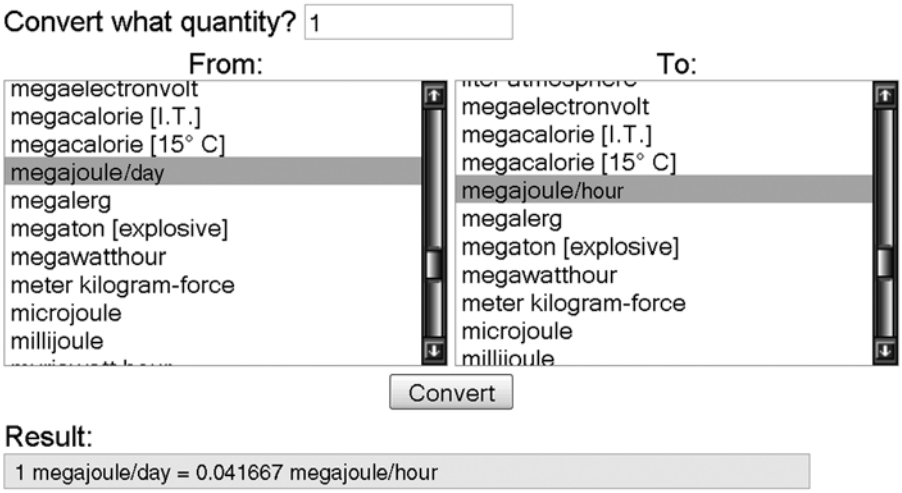

To calculate the Base per Custom value for a custom unit not shown in Table 3-10, see one of the following examples:

- Energy Conversion Example: page 51
- Time Conversion Example: page 52
- Energy and Time Conversion Example: page 52

Energy conversion example:

To find the Base per Custom relationship for a custom unit of thousands of BTU per hour (kBtuh) and a base unit of BTU per hour (Btu/h), input the following:

Custom Unit = kBtuh

Base Unit = Btu/h

Because:
1 kBtu (Thousands of BTU) = 1000 Btu

Then:

$$1\ \text{kBtuh} = \frac{1 \cdot \text{kBtu}}{1 \cdot \text{h}} \times \frac{1000 \cdot \text{Btu}}{1 \cdot \text{h}} = 1000\ \text{Btu/h}$$

1 kBtuh = 1000 Btu/h

Therefore:

$$\text{Base per Custom} = \frac{\text{Number of Base Units}}{1\ \text{Custom Unit}} = \frac{1000 \cdot \text{Btu/h}}{1 \cdot \text{kBtuh}} = 1000$$

Figure 3-29. Energy rate custom uUnits - Energy conversion example

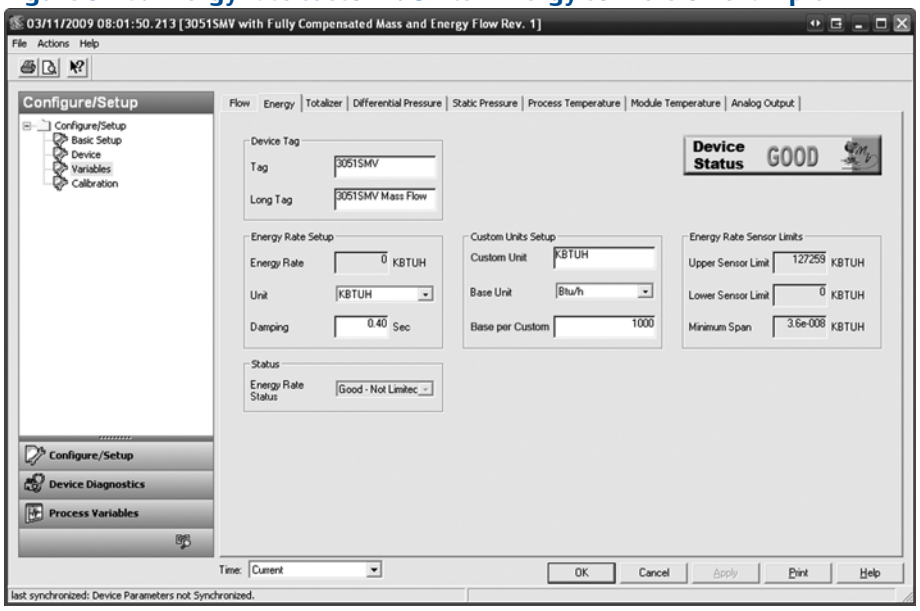

Time conversion example:

To find the Base per Custom relationship for a custom unit of BTU per day (Btu/d) and a base unit of BTU per hour (Btu/h), input the following:

Custom Unit = Btu/d
Base Unit = Btu/h

Because:
1 d (Day) = 24 h (Hours)

Then:

$$1\ \text{Btu/d} = \frac{1 \cdot \text{Btu}}{1 \cdot \text{d}} \times \frac{1 \cdot \text{d}}{24 \cdot \text{h}} = 0.041667\ \text{Btu/h}$$

1 Btu/d = 0.041667 Btu/h

Therefore:

$$\text{Base per Custom} = \frac{\text{Number of Base Units}}{1\ \text{Custom Unit}} = \frac{0.041667 \cdot \text{Btu/h}}{1 \cdot \text{Btu/d}} = 0.041667$$

Figure 3-30. Energy rate custom units - Time conversion example

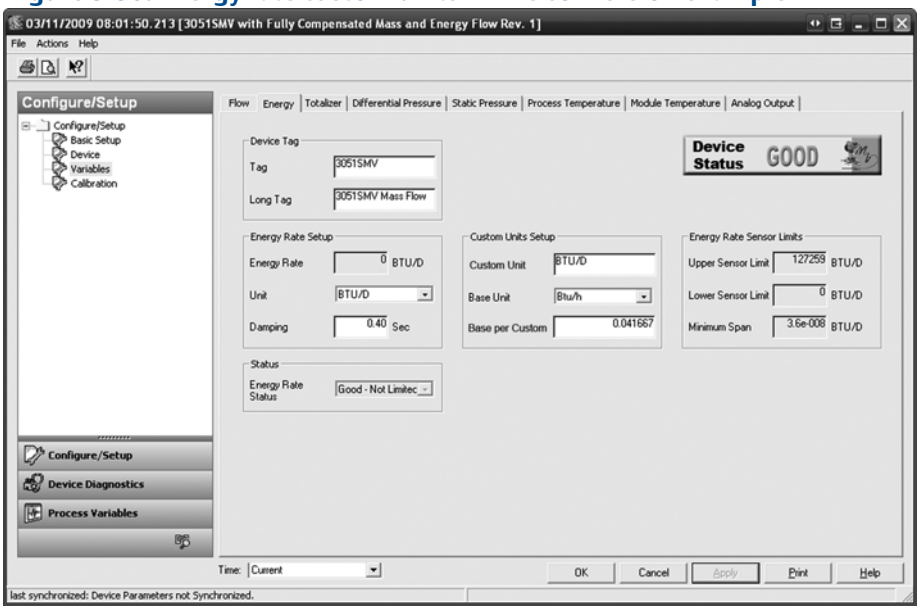

Energy and time conversion example:

To find the Base per Custom relationship for a custom unit of thousands of BTU per day (kBtud) and a base unit of BTU per hour (Btu/h), input the following:

Custom Unit = kBtud
Base Unit = Btu/h

Because:
1 kBtu (Thousands of BTU)= 1000 Btu and

1 d (Day) = 24 h (Hours)

Then:

$$1\ \text{kBtud} = \frac{1 \cdot \text{kBtu}}{1 \cdot \text{d}} \times \frac{1000 \cdot \text{Btu}}{1 \cdot \text{kBtu}} \times \frac{1 \cdot \text{d}}{24 \cdot \text{h}} = 41.6667\ \text{Btu/h}$$

1 kBtud = 41.6667 Btu/h

Therefore:

$$\text{Base per Custom} = \frac{\text{Number of Base Units}}{1\ \text{Custom Unit}} = \frac{41.6667 \cdot \text{Btu/h}}{1 \cdot \text{kBtud}} = 41.6667$$

Figure 3-31. Energy rate custom units - Energy and time conversion example

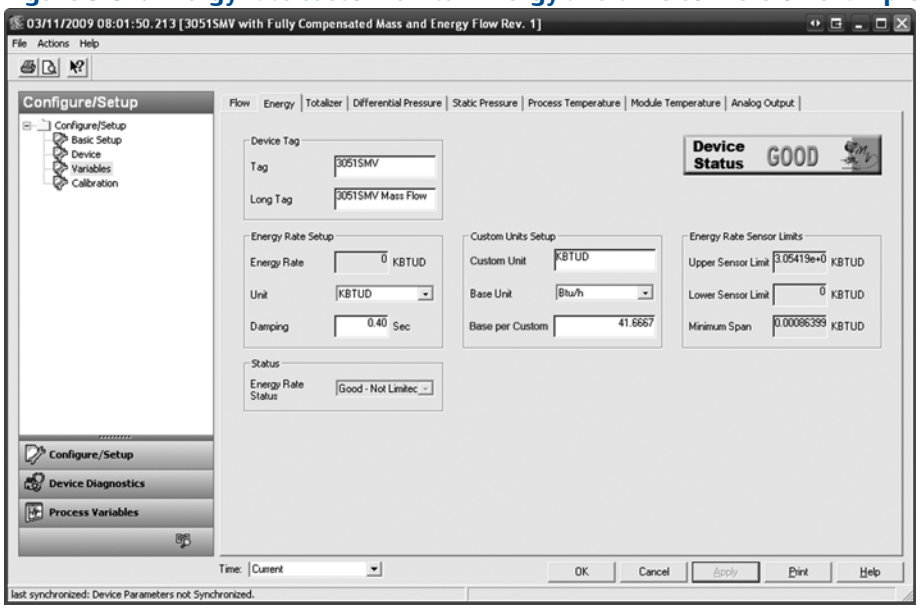

3. Under the *Low Flow Cutoff* heading, edit the current *Minimum DP Value* as needed. The unit for this value is the user-selected DP unit. If the measured DP value is less than the minimum DP value, the transmitter will calculate the energy value to be zero.

4. The *Sensor Limits* and *Minimum Span* can be viewed under the *Energy Rate Sensor Limits* heading.

3.7.3 Totalizer

Mass and Energy Flow Fast Keys	1, 4, 1, 3

(Fully Compensated Mass and Energy Flow Feature Board only):

The *Totalizer* tab is used to configure the settings associated with the Totalizer functionality within the transmitter.

Figure 3-32. Variables - Totalizer tab

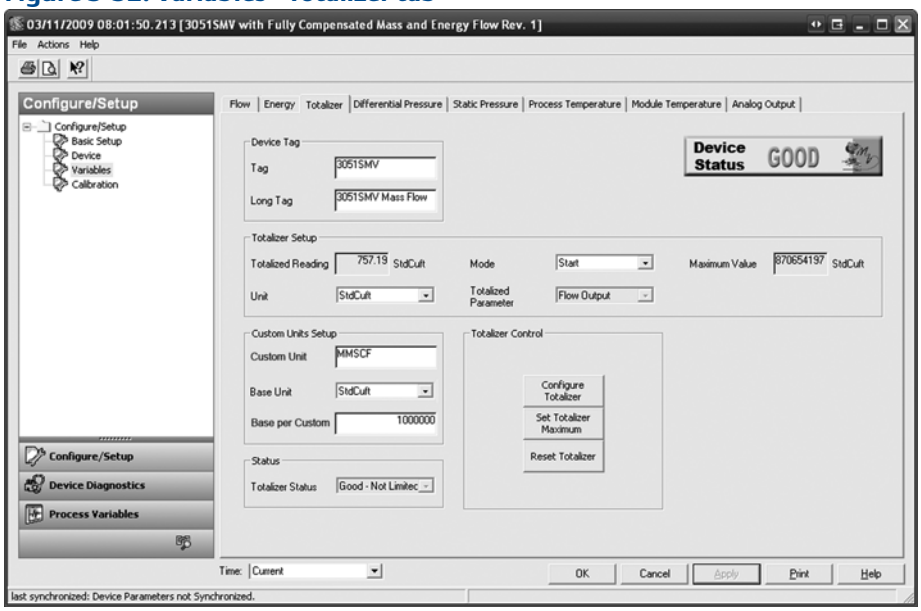

1. To turn the totalizer functionality on or off, select Start or Stop from the *Mode* drop down menu under the *Totalizer Setup* heading. The totalizer *Units* may also be edited under this heading.

2. Verify the *Totalized Parameter* and the *Totalizer Maximum* value. To edit the*Totalized Parameter*, click on the Configure Totalizer button under the *Totalizer Control* heading.

Note
When the totalizer reaches its maximum value, it automatically resets to zero and continues totalizing. The default maximum is a value equivalent to 4.29 billion pounds, actual cubic feet, or BTU. To edit the *Totalizer Maximum* value, click on the Set Totalizer Maximum button under the *Totalizer Control* heading.

3. To reset the *Totalized Reading* to zero, click the Reset Totalizer button under the *Totalizer Control* heading.

4. Under the *Custom Units Setup* heading, the user may configure a custom unit for the *Totalized Reading*. Custom units allow the totalizer rate to be displayed in units of measure that are not standard in the 3051S MultiVariable.

Note
If the totalizer rate is configured as the primary variable and is being output via the 4-20 mA signal, verify the 4-20 mA range (LRV and URV) after completing the custom unit configuration. For more information on verifying the 4-20 mA range, see "Basic device configuration" on page 31.

Follow these steps to configure a custom unit:

a. Custom Unit: Enter the desired custom unit label to be displayed for the *Totalized Reading*. Up to five characters including letters, numbers, and symbols can be entered in the custom unit field.

Note
It is recommended that the Custom Unit be entered in upper case letters. If lower case letters are entered, the LCD will display upper case letters. Additionally, the following special characters are recognized by the LCD Display: hyphens ("-"), percent symbols ("%"), asterisks ("*"), forward slashes ("/") and spaces. Any other character entered for the Custom Unit will be displayed as an asterisk ("*") on the LCD Display. The following warning will be returned indicating these changes: "Custom Unit contains characters that will display in upper case or asterisks on LCD. The DCS will display as entered."

b. Base Unit: From the drop-down menu, select a base unit to be used for the custom unit relationship.

c. Base per Custom: Enter a numeric value that represents the number of base units per one custom unit. The 3051S MultiVariable transmitter uses the following convention:

$$\text{Base per Custom} = \frac{\text{Number of Base Units}}{1 \text{ Custom Unit}}$$

Example:

Custom Unit: kg
Base Unit: g

Because 1 kg (Kilogram) = 1000 g (Grams)

$$\text{Base per Custom} = \frac{\text{Number of Base Units}}{1 \text{ Custom Unit}} = \frac{1000 \cdot g}{1 \cdot kg} = 1000$$

The values of Base per Custom for common totalizer units are shown in Table 3-11.

d. Click Apply.

e. Totalizer Unit: From the drop-down menu, select the custom unit that was created in Step b.

Note
The custom unit may not be available as a selection in the *Totalizer Unit* drop-down menu until the drop-down menu is refreshed. To refresh the drop-down menu, navigate to the *Basic Setup* tab and then return to the *Variables - Totalizer* tab.

Table 3-11. Common custom units - Totalizer

Custom Unit	Base Unit	Base per Custom
Millions of Normal Cubic Meters (MMNCM)	NmlCum	1000000
Millions of Standard Cubic Feet (MMSCF)	StdCuft	1000000
Millions of Standard Cubic Meters (MMSCM)	StdCum	1000000
Thousands of Metric Tons (KMTON)	MetTon	1000
Thousands of Normal Cubic Meters (KNCM)	NmlCum	1000
Thousands of Short Tons (KSTON)	STon	1000
Thousands of Standard Cubic Feet (KSCF)	StdCuft	1000
Thousands of Standard Cubic Meters (KSCM)	StdCum	1000

If conversion factor tables or internet search engines are used to determine the Base per Custom value, it is important to enter the Custom Unit in the “From” field and the Base Unit in the “To” Field.

To calculate the Base per Custom value for a custom unit not shown in Table 3-9, see the following example:

- Totalizer Conversion Example: page 57

Totalizer conversion example:

To find the Base per Custom relationship for a custom unit of millions of standard cubic feet (mmscf) and a base unit of standard cubic feet (StdCuft), input the following:

Custom Unit = mmscf

Base Unit = StdCuft

Because:
1 mmscf (Millions of Standard Cubic Feet) = 1000000 StdCuft (Standard Cubic Feet)

Therefore:

$$\text{Base per Custom} = \frac{\text{Number of Base Units}}{1\ \text{Custom Unit}} = \frac{1000000 \cdot \text{StdCuft}}{1 \cdot \text{mmscf}} = 1000000$$

Figure 3-33. Totalizer custom units - Totalizer example

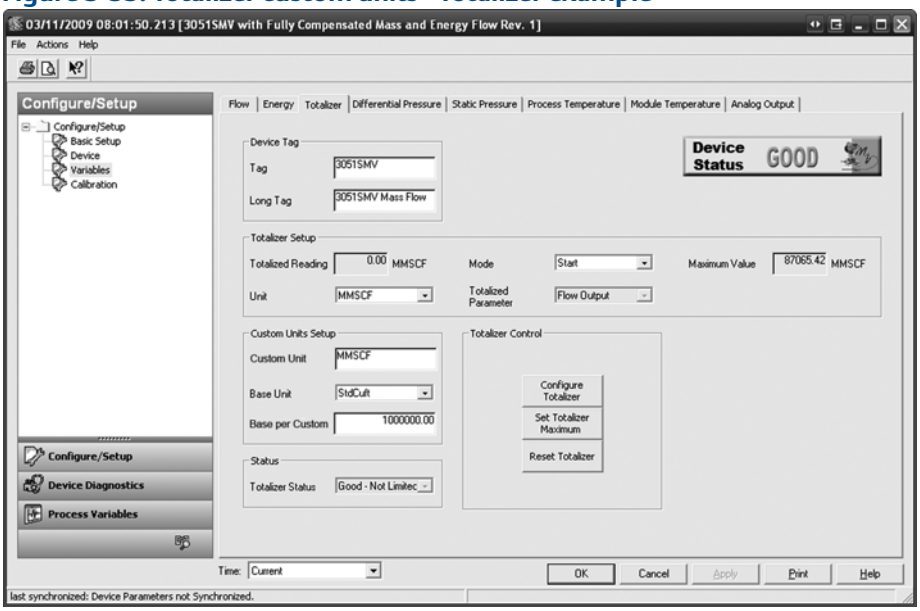

3.7.4 Differential pressure

Mass and Energy Flow Fast Keys	1, 4, 1, 4
Direct Process Var. Output Fast Keys	1, 4, 1, 1

Note
For Differential Pressure Sensor Calibration see page 5.

Figure 3-34. Variables - Differential pressure tab

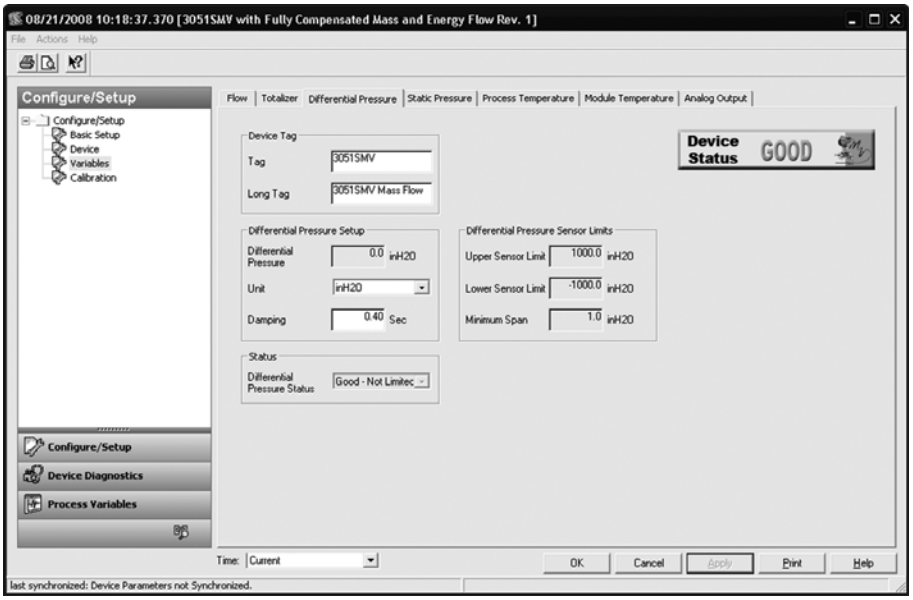

1. Under the *Differential Pressure Setup* heading, edit the *DP Units* and *Damping* value as needed.

2. The *Sensor Limits* and *Minimum Span* can be viewed under the *Differential Pressure Sensor Limits* heading.

3.7.5 Static pressure

Mass and Energy Flow Fast Keys	1, 4, 1, 5
Direct Process Var. Output Fast Keys	1, 4, 1, 2

Note
For Sensor trim is a two-point sensor calibration where two end-point pressures are applied, and all output is linearized between them. Always adjust the lower sensor trim value first to establish the correct offset. Adjustment of the upper sensor trim value provides a slope correction to the characterization curve based on the lower sensor trim value. The trim values allow the user to optimize performance over a specified measuring range at the calibration temperature. see page 4.

Figure 3-35. Variables - Static pressure tab

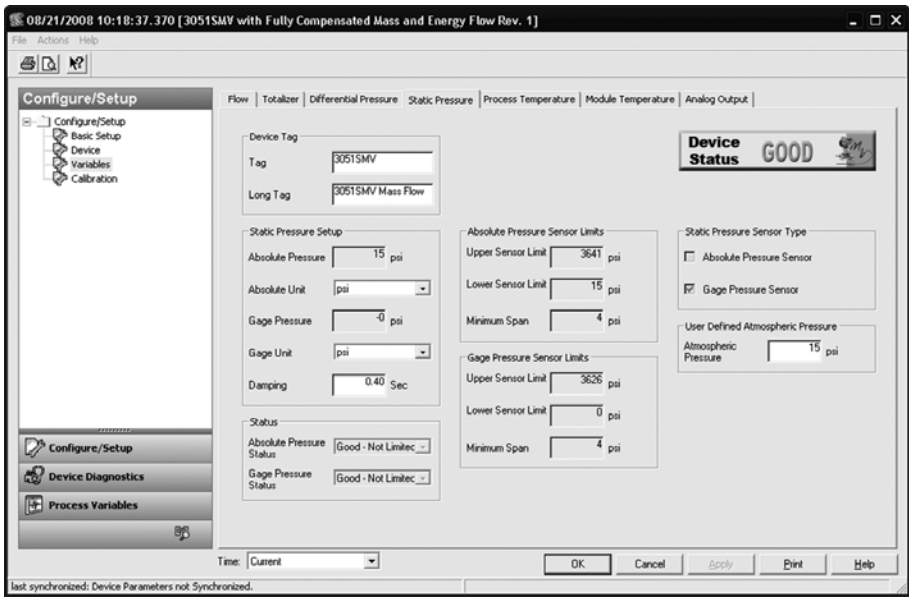

1. Under the *Static Pressure Setup* heading, edit the *Absolute Pressure Units* and *Gage Pressure Units* as needed. The static pressure *Damping* may also be edited.

Note
The transmitter may be equipped with either an absolute or gage static pressure sensor type depending on specified model code. The type of static pressure sensor equipped in the transmitter can be determined by referring to the *Static Pressure Sensor Type* heading. The static pressure type not being measured is a calculated value using the atmospheric pressure value as specified under the *User-Defined Atmospheric Pressure* heading.

2. The *Sensor Limits* and *Minimum Span* for the absolute and gage static pressure can be viewed under the *Sensor Limit* headings.

3.7.6 Process temperature

Mass and Energy Flow Fast Keys	1, 4, 1, 6
Direct Process Var. Output Fast Keys	1, 4, 1, 3

Note
For Process Temperature Sensor Calibration see page 9.

If a transmitter was ordered with Fixed Process Temperature Only, the Fixed Temperature Value and Units can be edited on the *Fixed Temperature* tab.

Figure 3-36. Variables - process temperature tab

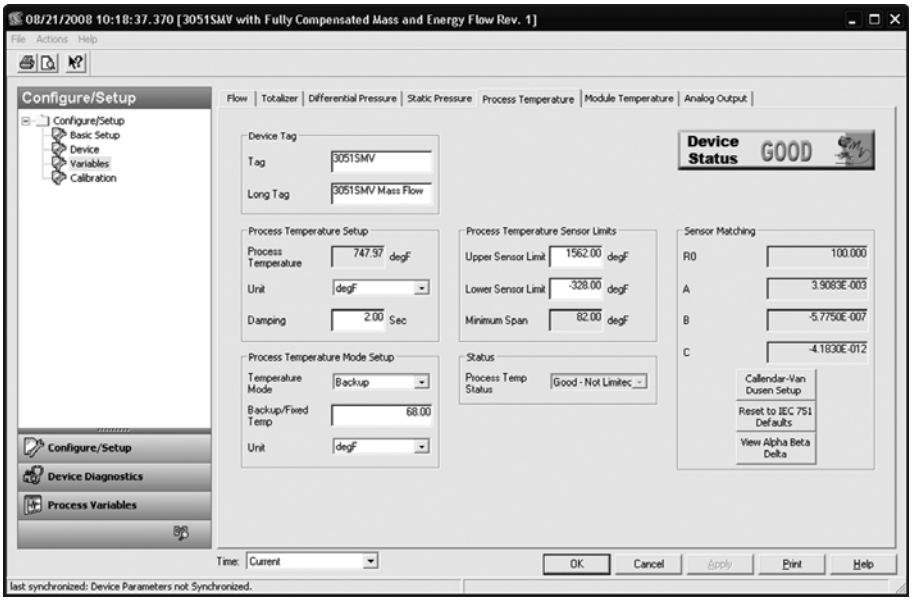

1. Under the *Process Temperature Setup* heading, edit the *Units* and *Damping* value as needed.

2. Select the *Temperature Mode* under the *Process Temperature Setup* heading. See Table 3-12.

Table 3-12. Temperature modes

Temperature Mode	Description
Normal	The transmitter will only use the actual measured *Process Temperature* value. If the temperature sensor fails, the transmitter will put the analog signal into Alarm.
Backup	The transmitter will use the actual measured *Process Temperature* value. If the temperature sensor fails, the transmitter will use the value shown in the *Fixed / Backup Temperature* field.
Fixed	The transmitter will always use the temperature value shown in the *Fixed / Backup Temperature* field.

Note
Process Temperature Mode Setup only applies to transmitters with Fully Compensated Mass and Energy Flow Feature Board.

3. The *Sensor Limits* and *Minimum Span* can be viewed under the *Process Temperature Sensor Limits* heading. The upper and lower sensor limits may be edited as needed.

The 3051S MultiVariable accepts Callendar-Van Dusen constants from a calibrated RTD schedule and generates a special custom curve to match that specific sensor Resistance vs. Temperature performance. Matching the specific sensor curve with the transmitter configuration enhances the temperature measurement accuracy.

4. Under the *Sensor Matching* heading, the Callendar-Van Dusen constants R_0, A, B, and C can be viewed. If the Callendar-Van Dusen constants are known for the user's specific Pt 100 RTD sensor, the constants R_0, A, B, and C may be edited by clicking on the Callendar-Van Dusen Setup button and following the on-screen prompts.

   The user may also view the α, ß, and δ Coefficients by clicking on the View Alpha, Beta, Delta button. The constants R_0, α, ß, and δ may be edited by clicking on the Callendar-Van Dusen Setup button and following the on-screen prompts. To reset the transmitter to the IEC 751 Defaults, click the Reset to IEC 751 Defaults button.

3.7.7 Module temperature

Mass and Energy Flow Fast Keys	1, 4, 1, 7
Direct Process Var. Output Fast Keys	1, 4, 1, 4

The sensor module temperature variable is the measured temperature of the sensors and electronics within the SuperModule assembly. The module temperature can be used to control heat tracing or diagnose device overheating.

Figure 3-37. Variables - module temperature tab

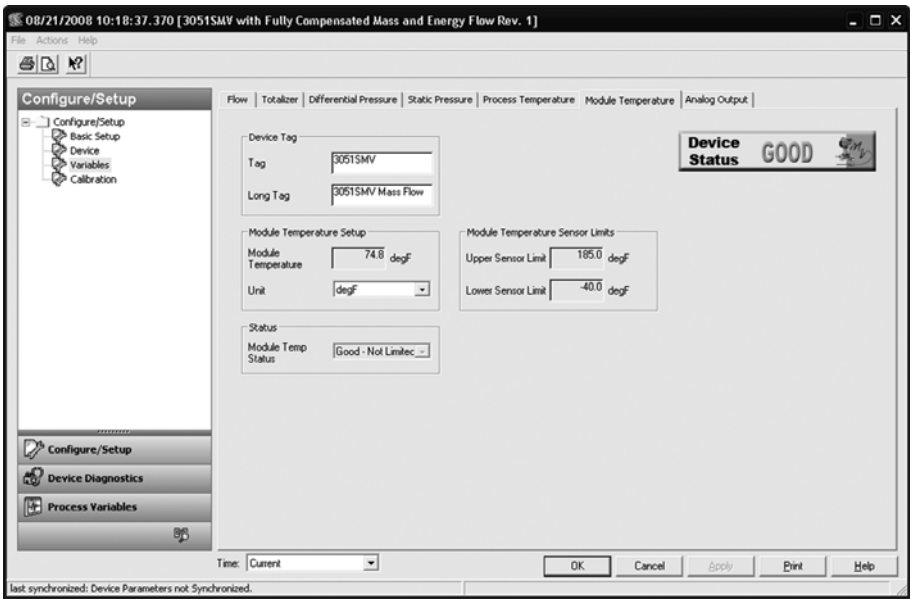

1. Under the *Module Temperature Setup* heading, edit the *Units* as needed.
2. The *Sensor Limits* can be viewed under the *Module Temperature Sensor Limits* heading.

3.7.8 Analog output

Mass and Energy Flow Fast Keys	1, 4, 3, 2
Direct Process Var. Output Fast Keys	1, 4, 3, 2

Note
For Analog Calibration see page 11.

Figure 3-38. Variables - analog output tab

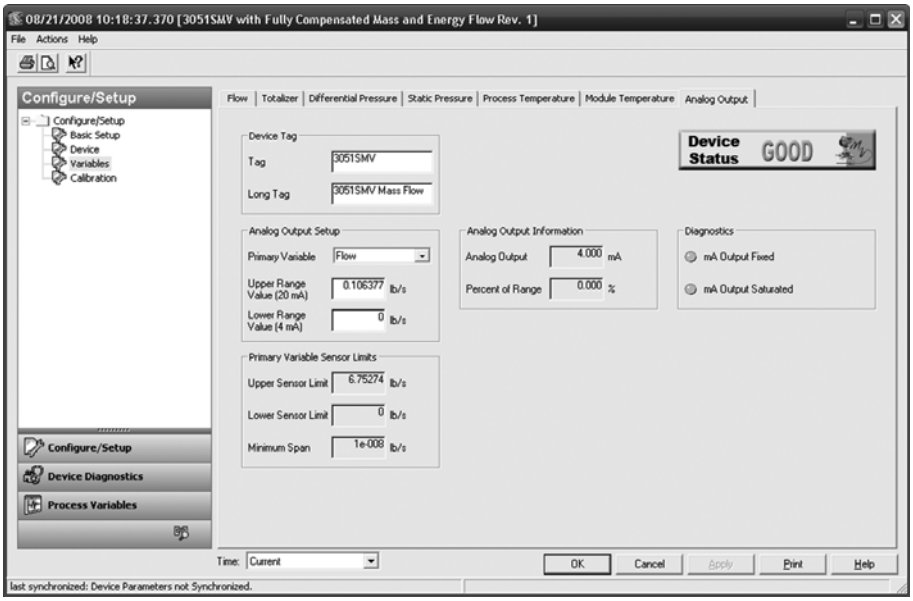

1. Select the *Primary Variable* under the *Analog Output Setup* heading. The *Upper Range Value* and *Lower Range Value* may also be edited under this heading.

2. Verify the *Upper Sensor Limit* and *Lower Sensor Limit* and minimum span under the *Primary Variable Sensor Limits* heading.

Transfer function (Direct process variable output feature board only)

The 3051S MultiVariable Transmitter with Direct Process Variable Output Feature Board has two analog output settings: Linear and Square Root. Activate the square root output option to make analog output proportional to flow. As input approaches zero, the 3051S MultiVariable Transmitter automatically switches to linear output in order to ensure a smooth, stable output near zero (see Figure 3-39 on page 64).

From 0 to 0.6 percent of the ranged pressure input, the slope of the curve is unity (y = x). This allows accurate calibration near zero. Greater slopes would cause large changes in output (for small changes at input). From 0.6 percent to 0.8 percent, curve slope equals 41.72 (y = 41.72x) to achieve continuous transition from linear to square root at the transition point.

Note
Do not set both the analog output of the device and the control system to square root.

Figure 3-39. Square root output transition point

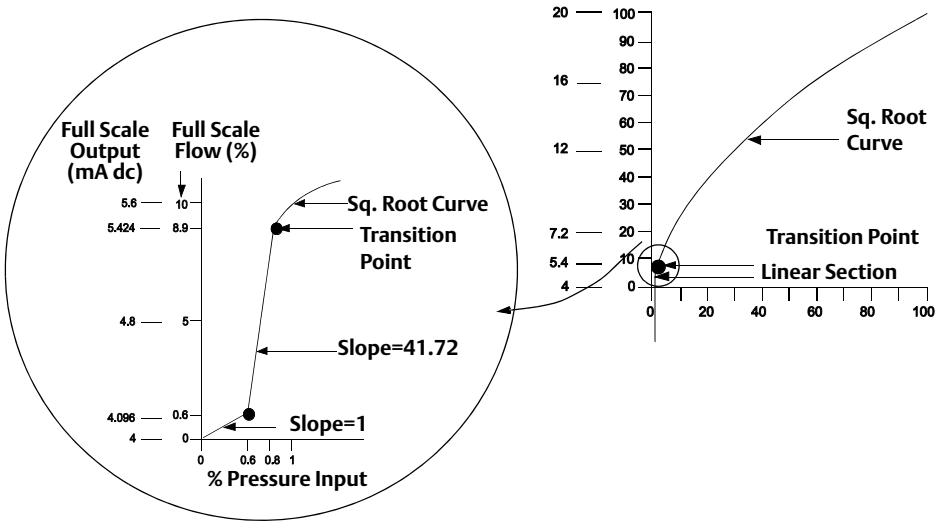

Figure 3-39 only applies to the square root output for the 3051S MultiVariable with the Direct Process Variable Output Feature Board.

Note
For a flow turndown of greater than 10:1, it is not recommended to perform a square root transfer function in the transmitter. Instead, perform the square root transfer function in the control system.

3.8 Menu trees and 475 fast keys

Based on the configuration ordered, some measurements (i.e. static pressure, process temperature) and/or calculation types (i.e. mass, volumetric, and energy flow) may not be available for all fluid types. Available measurements and/or calculation types are determined by the MultiVariable Type and Measurement Type codes ordered. See "Ordering information" on page 27 for more information.

The Menu Trees and 475 Fast Keys in this section are shown for the following model codes:

- MultiVariable Type M (Fully Compensated Mass and Energy Flow) with Measurement Type 1 (Differential Pressure, Static Pressure, and Process Temperature)
- MultiVariable Type P (Direct Process Variable Output) with Measurement Type 1 (Differential Pressure, Static Pressure, and Process Temperature).

The Menu Trees and 475 Fast Keys for other model codes will vary.

3.8.1 Menu tree for fully compensated mass and energy flow (page 1)

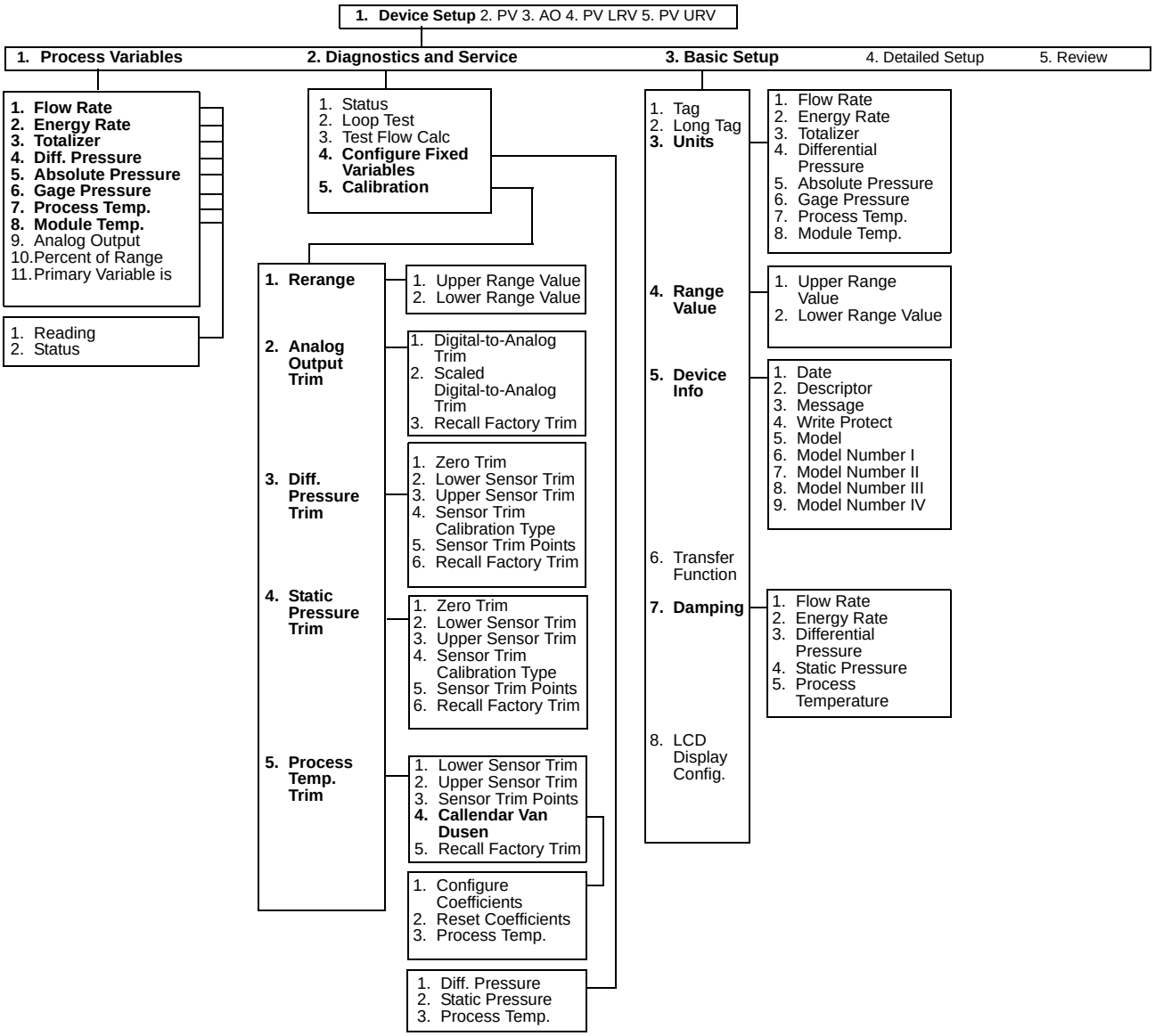

3.8.2 Menu tree for fully compensated mass and energy flow (page 2)

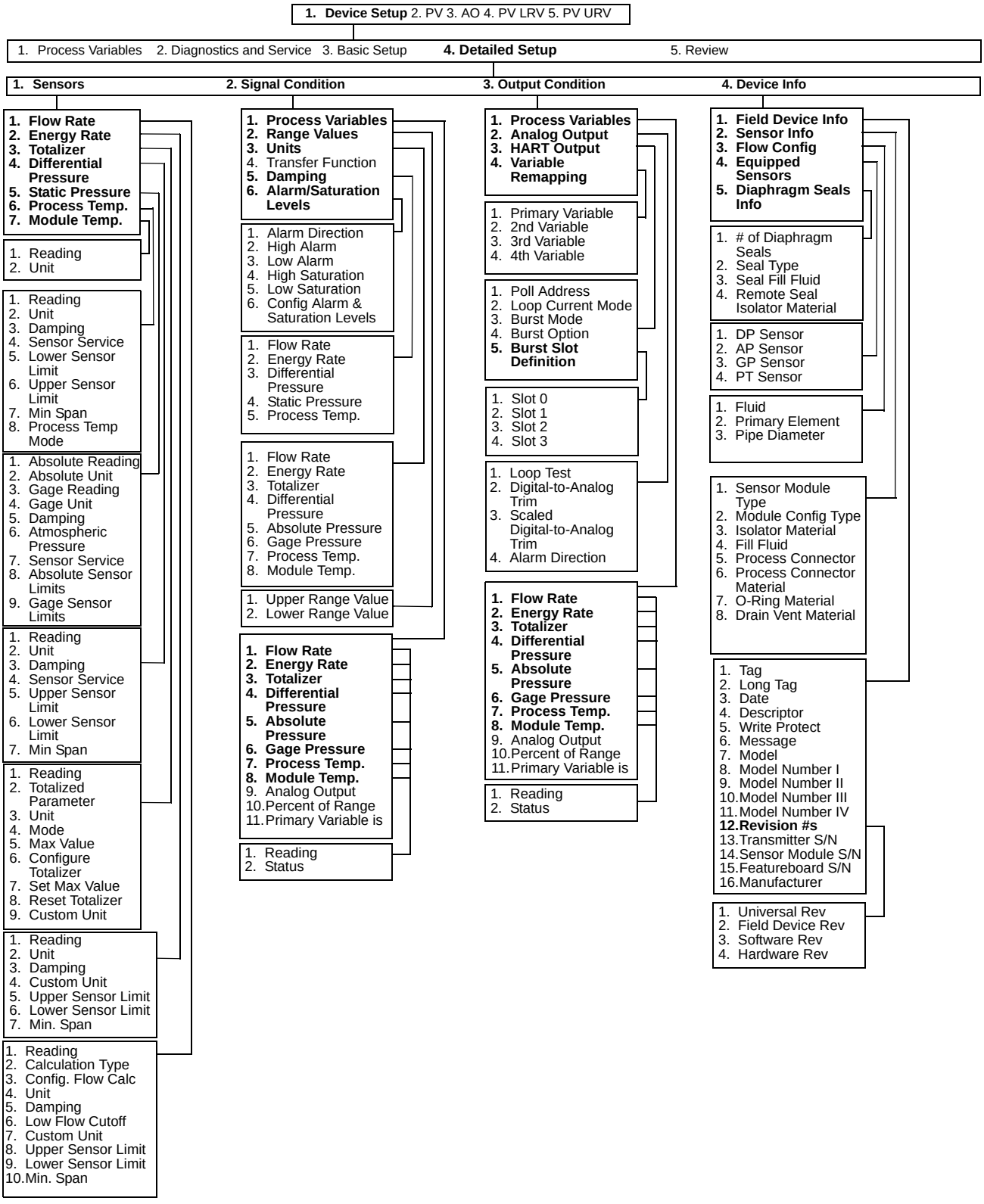

3.8.3 Menu tree for direct process variable output (page 1)

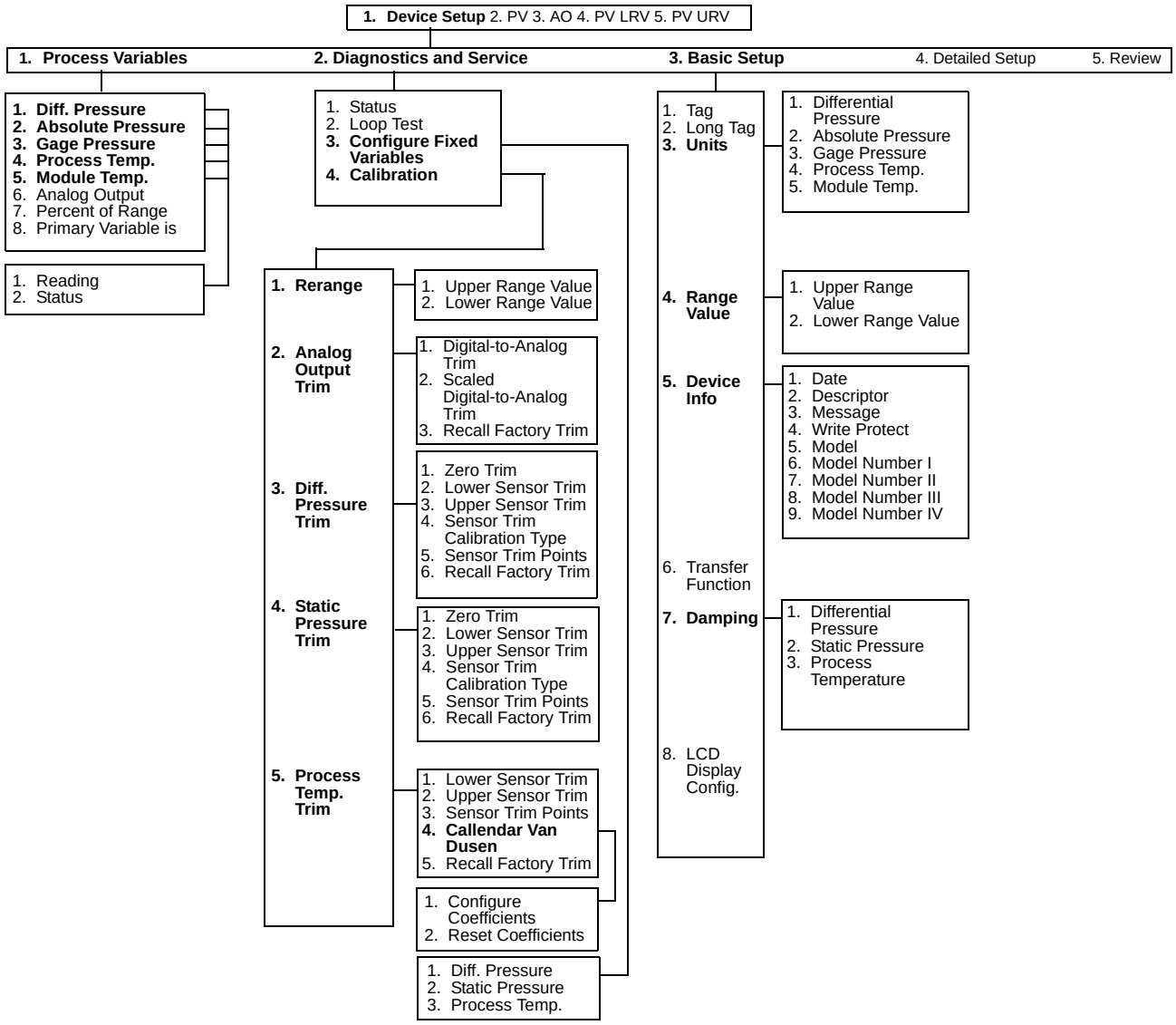

3.8.4 Menu tree for direct process variable output (page 2)

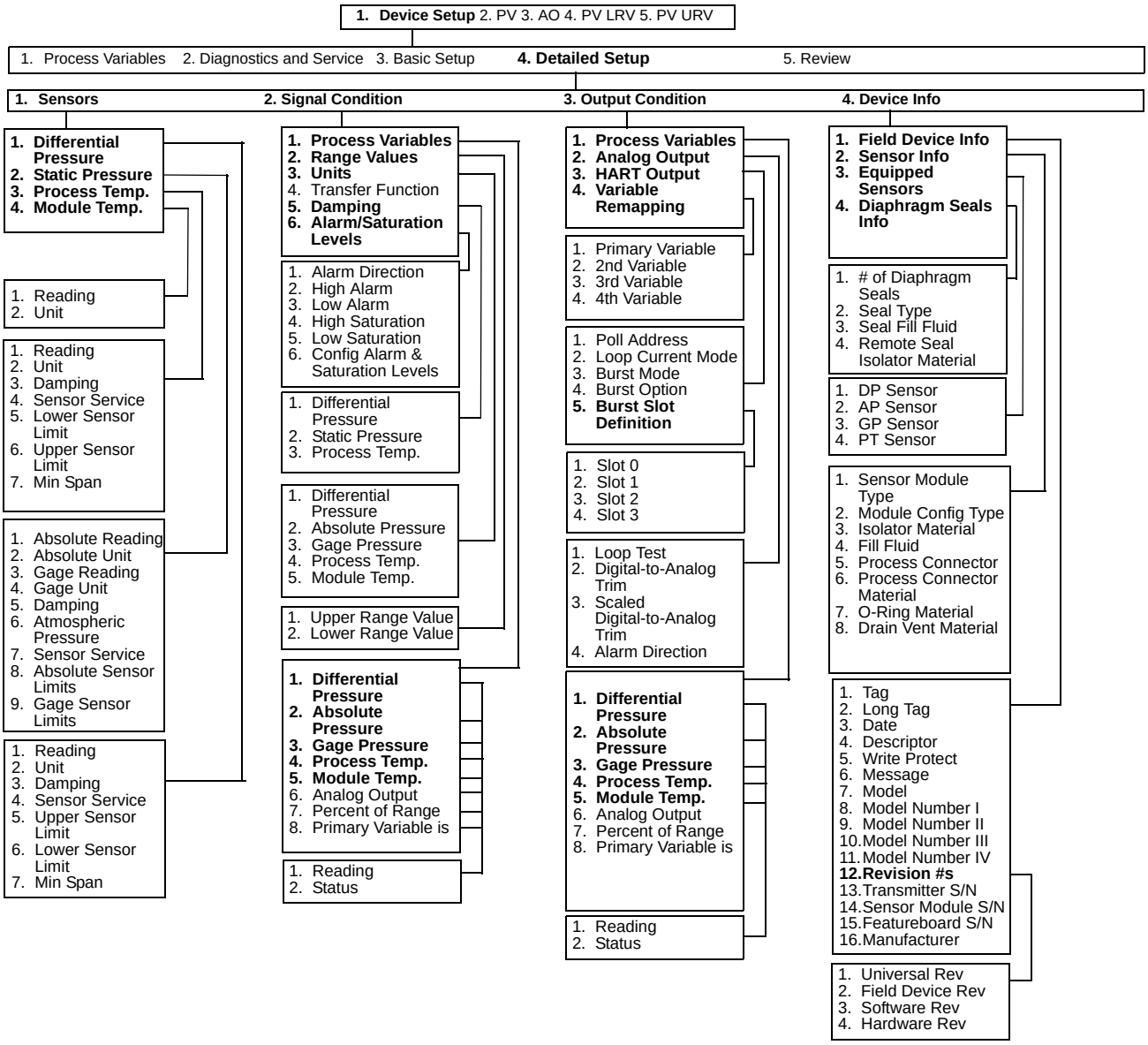

3.8.5 475 Fast keys

Use 3051SMV Engineering Assistant or any HART-compliant master to communicate with and verify configuration of the 3051S MultiVariable Transmitter.

Table 1 shows the 475 Field Communicator fast keys for the Fully Compensated Mass and Energy Flow. Table 2 shows the fast keys for the Direct Process Variable Output.

A check (√) indicates the basic configuration parameters. At a minimum, these parameters should be verified as part of the configuration and startup procedure.

Table 3-13. Fast keys for fully compensated mass and energy flow output

	Function	Fast Key Sequence
	Absolute Pressure Reading and Status	1,4,2,1,5
	Absolute Pressure Sensor Limits	1,4,1,5,8
	Absolute Pressure Units	1,3,3,5
	Alarm and Saturation Level Configuration	1,4,2,6,6
	Alarm and Saturation Levels	1,4,2,6
	Analog Output Trim Options	1,2,5,2
	Burst Mode Setup	1,4,3,3,3
	Burst Mode Options	1,4,3,3,4
	Callendar-van Dusen Sensor Matching	1,2,5,5,4
	Configure Fixed Variables	1,2,4
	Damping	1,3,7
	Diaphragm Seals Information	1,4,4,5
√	Differential Pressure Low Flow Cutoff	1,4,1,1,6
	Differential Pressure Reading and Status	1,4,2,1,4
	Differential Pressure Sensor Trim Options	1,2,5,3
√	Differential Pressure Zero Trim	1,2,5,3,1
	Differential Pressure Units	1,3,3,4
	Energy Rate Units	1,3,3,2
	Energy Reading and Status	1,4,2,1,2
	Equipped Sensors	1,4,4,4
	Field Device Information	1,4,4,1
	Flow Calculation Type	1,4,1,1,2
√	Flow Rate Units	1,3,3,1
	Flow Reading and Status	1,4,2,1,1
	Gage Pressure Reading and Status	1,4,2,1,6
	Gage Pressure Sensor Limits	1,4,1,5,9
	Gage Pressure Units	1,3,3,6
	LCD Configuration	1,3,8

Table 3-13. Fast keys for fully compensated mass and energy flow output

	Function	Fast Key Sequence
	Loop Test	1,2,2
	Module Temperature Reading and Status	1,4,2,1,8
	Module Temperature Units	1,3,3,8
	Poll Address	1,4,3,3,1
	Process Temperature Reading and Status	1,4,2,1,7
√	Process Temperature Sensor Mode	1,4,1,6,8
	Process Temperature Sensor Trim Options	1,2,5,5
	Process Temperature Unit	1,3,3,7
√	Ranging the Analog Output	1,2,5,1
	Recall Factory Trim Settings	1,2,5,2,3
	Sensor Information	1,4,4,2
√	Static Pressure Sensor Lower Trim (AP Sensor)	1,2,5,4,2
	Static Pressure Sensor Trim Options	1,2,5,4
√	Static Pressure Sensor Zero Trim (GP Sensor)	1,2,5,4,1
√	Status	1,2,1
√	Tag	1,3,1
	Test Flow Calculation	1,2,3
	Totalizer Configuration	1,4,1,3
	Totalizer Reading and Status	1,4,2,1,3
	Totalizer Units	1,3,3,3
	Variable Mapping	1,4,3,4
	Write Protect	1,3,5,4

Table 3-14. Fast keys for direct process variable measurement

	Function	Fast Key Sequence
	Absolute Pressure Reading and Status	1,4,2,1,2
	Absolute Pressure Sensor Limits	1,4,1,2,8
√	Absolute Pressure Units	1,3,3,2
	Alarm and Saturation Level Configuration	1,4,2,6,6
	Alarm and Saturation Levels	1,4,2,6
	Analog Output Trim Options	1,2,4,2
	Burst Mode Setup	1,4,3,3,3
	Burst Mode Options	1,4,3,3,4
	Callendar-van Dusen Sensor Matching	1,2,4,5,4
	Damping	1,3,7
	Diaphragm Seals Information	1,4,4,4
	Differential Pressure Reading and Status	1,4,2,1,1
	Differential Pressure Sensor Trim Options	1,2,4,3
√	Differential Pressure Zero Trim	1,2,4,3,1
√	Differential Pressure Units	1,3,3,1
	Equipped Sensors	1,4,4,3
	Field Device Information	1,4,4,1
	Gage Pressure Reading and Status	1,4,2,1,3
	Gage Pressure Sensor Limits	1,4,1,2,9
√	Gage Pressure Units	1,3,3,3
	LCD Configuration	1,3,8
	Loop Test	1,2,2
	Module Temperature Reading and Status	1,4,2,1,5
	Module Temperature Units	1,3,3,5
	Poll Address	1,4,3,3,1
	Process Temperature Reading and Status	1,4,2,1,4
	Process Temperature Sensor Trim Options	1,2,4,5
√	Process Temperature Unit	1,3,3,4
√	Ranging the Analog Output	1,2,4,1
	Recall Factory Trim Settings	1,2,4,2,3
	Sensor Information	1,4,4,2
√	Static Pressure Sensor Lower Trim (AP Sensor)	1,2,4,4,2
	Static Pressure Sensor Trim Options	1,2,4,4
√	Static Pressure Sensor Zero Trim (GP Sensor)	1,2,4,4,1

	Function	Fast Key Sequence
√	Status	1,2,1
√	Tag	1,3,1
√	Transfer Function	1,3,6
	Variable Mapping	1,4,3,4
	Write Protect	1,3,5,4

Section 4 Operation and Maintenance

Overview . . . . . page 9
Safety messages . . . . . page 10
Transmitter calibration . . . . . page 11
Transmitter functional tests . . . . . page 20
Process variables . . . . . page 21
Field upgrades and replacements . . . . . page 23

4.1 Overview

This section contains information on operating and maintaining 3051S MultiVariable Transmitters. Instructions for performing configuration and calibration procedures are given for 475 Field Communicator version 2.0 or later, AMS version 9.0 or later, and Engineering Assistant version 6.1 or later. Screen shots for this section are taken from AMS version 9.0; Engineering Assistant screens will look similar and follow the same instructions for use and navigation. For convenience, 475 Field Communicator fast key sequences are labeled “Fast Keys” for each software function below the appropriate headings.

Based on the configuration ordered, some measurements (i.e. static pressure, process temperature) and/or calculation types (i.e. mass, volumetric, and energy flow) may not be available for all fluid types. Available measurements and/or calculation types are determined by the MultiVariable Type and Measurement Type codes ordered. See “Ordering information” on page 27 for more information.

All screens in this section are shown for MultiVariable Type M (Fully Compensated Mass and Energy Flow), Measurement Type 1 (Differential Pressure, Static Pressure, and Process Temperature). 475 Fast Keys are given for both MultiVariable Type M and P (Direct Process Variable Output) with Measurement Type 1. 475 Fast Keys and Screens for other MultiVariable Types and Measurement Types may vary.

4.2 Safety messages

⚠ Procedures and instructions in this section may require special precautions to ensure the safety of the personnel performing the operation. Information that raises potential safety issues is indicated with a warning symbol (⚠). Refer to the following safety messages before performing an operation preceded by this symbol.

4.2.1 Warnings

⚠ WARNING

Failure to follow these installation guidelines could result in death or serious injury:

- Make sure only qualified personnel perform the installation.

Explosions could result in death or serious injury:

- Do not remove the transmitter cover in explosive atmospheres when the circuit is live.
- Before connecting a 475 Field Communicator in an explosive atmosphere, make sure the instruments in the loop are installed in accordance with intrinsically safe or non-incendive field wiring practices.
- Both transmitter covers must be fully engaged to meet flameproof/explosion-proof requirements.
- Verify that the operating atmosphere of the transmitter is consistent with the appropriate hazardous locations certifications.

Electrical shock could cause death or serious injury. If the sensor is installed in a high-voltage environment and a fault or installation error occurs, high voltage may be present on the transmitter leads and terminals:

- Use extreme caution when making contact with the leads and terminals.

Process leaks could result in death or serious injury.

- Install and tighten all four flange bolts before applying pressure.
- Do not attempt to loosen or remove flange bolts while the transmitter is in service.
- Replacement equipment or spare parts not approved by Emerson Process Management for use as spare parts could reduce the pressure retaining capabilities of the transmitter and may render the instrument dangerous.
- Use only bolts supplied or sold by Emerson Process Management as spare parts.

Improper assembly of manifolds to traditional flange can damage the device.

- For safe assembly of manifold to traditional flange, bolts must break back plane of flange web (i.e., bolt hole) but must not contact the sensor module.

Improper installation or repair of the SuperModule™ assembly with high pressure option (P0) could result in death or serious injury.

- For safe assembly, the high pressure SuperModule assembly must be installed with ASTM A193 Class 2 Grade B8M Bolts and either a 305 manifold or a DIN-compliant traditional flange.

Static electricity can damage sensitive components.

⚠ Observe safe handling precautions for static-sensitive components.

4.3 Transmitter calibration

4.3.1 Calibration overview

Complete configuration and calibration of the 3051S MultiVariable Transmitter involves the following tasks:

Configure the output parameters

- Basic setup screen (page 24)
- Set Process Variable Units
- Set Primary Variable
- Rerange
- Set Transfer Function (Direct Process Variable Feature Board only)
- Set Damping

Calibrate the sensor (DP, P, and/or T)

For each sensor, perform:

- Sensor Trim (page 12)
- Zero or Lower Sensor Trim (page 13)

Calibrate the 4–20 mA output

- 4–20 mA Analog Trim (page 18); or
- 4–20 mA Scaled Output Trim (page 18)

Figure 4-1 summarizes the data flow for the 3051S MultiVariable. Data flows from left to right, and a parameter change affects all values to the right of the changed parameter.

Figure 4-1. Transmitter data flow

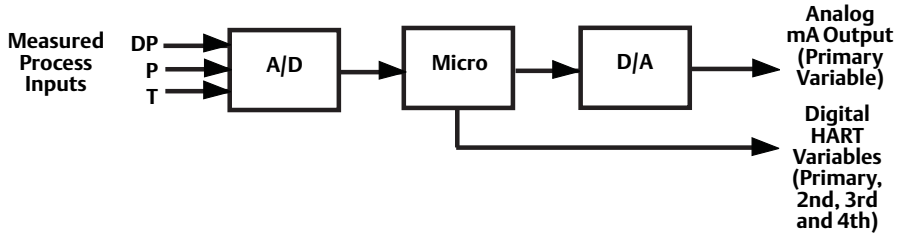

Data flow can be summarized in four major steps:

1. A change in a process variable (DP, P, and/or T) corresponds to a change in the sensor output (Sensor Signal).
2. The sensor signal is converted to a digital format that is understood by the microprocessor (Analog-to-Digital Signal Conversion).
3. Corrections and flow calculations are performed in the microprocessor to obtain a digital representation of the process output variables.
4. The Digital Primary Variable (PV) is converted to an analog value (Digital-to-Analog Signal Conversion).

4.3.2 Sensor trim overview

Trim the sensors using either sensor or zero trim functions. Trim functions vary in complexity and are application-dependent. Both trim functions alter the transmitter's interpretation of the input signal.

Zero trim

Zero trim is a single-point offset adjustment. It is useful for compensating for mounting position effects and is most effective when performed with the transmitter installed in its final mounting position. Since this correction maintains the slope of the characterization curve, it should not be used in place of a sensor trim over the full sensor range.

When performing a zero trim with a manifold, refer to "Rosemount 305 and 304 Manifolds" on page 19.

Note
The transmitter must be within five percent or less of the maximum span of true zero (zero-based) in order to calibrate with zero trim function.

The transmitter will not allow the user to perform a zero trim on an absolute static pressure sensor. To correct mounting position effects on the absolute static pressure sensor, perform a lower sensor trim. The lower sensor trim function provides an offset correction similar to the zero trim function, but it does not require zero-based input.

Upper and lower sensor trim

Sensor trim is a two-point sensor calibration where two end-point pressures are applied, and all output is linearized between them. Always adjust the lower sensor trim value first to establish the correct offset. Adjustment of the upper sensor trim value provides a slope correction to the characterization curve based on the lower sensor trim value. The trim values allow the user to optimize performance over a specified measuring range at the calibration temperature.

4.3.3 Differential pressure sensor calibration

Mass and Energy Flow Fast Keys	1, 2, 5, 3
Direct Process Var. Output Fast Keys	1, 2, 4, 3

The *Differential Pressure Calibration* Tab allows the user to complete a zero trim procedure or a full DP sensor trim, see Figure 4-2.

Figure 4-2. Calibration - differential pressure calibration tab

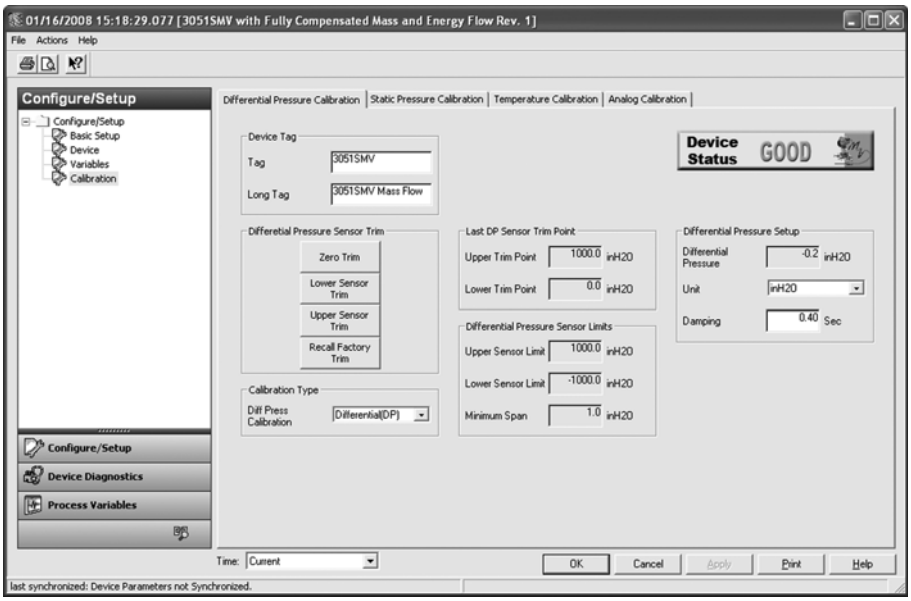

Zero trim

To perform a DP sensor zero trim, click on the Zero Trim button under the *Differential Pressure Sensor Trim* heading and follow the on-screen prompts. The transmitter must be within five percent or less of the maximum span of true zero (zero-based) in order to calibrate with zero trim function.

Note
When performing a DP sensor zero trim, ensure that the equalizing valve is open and all wet legs are filled to the correct levels.

Upper and lower sensor trim

A reference pressure device is required to perform a full sensor trim. Use a reference pressure device that is at least three times more accurate than the transmitter and allow the pressure input to stabilize for ten seconds before entering any values. It is possible to degrade the performance of the transmitter if the full sensor trim is done improperly or with inaccurate calibration equipment.

To perform a DP full trim, first click on the Lower Sensor Trim button and follow the on-screen prompts. Next, click on the Upper Sensor Trim button and follow the on-screen prompts.

Note
Select process variable calibration input values so that low and high values are equal to or outside the upper and lower range limits. Do not attempt to obtain reverse output by reversing the high and low points. The transmitter allows approximately five percent URL deviation from the characterized curve established at the factory.

Calibration type

The calibration type drop-down menu allows the user to note the type of device last used to calibrate the sensor (either Differential, Gage, or Absolute). This field does not affect the calibration of the device.

Recall factory trim

The Recall Factory Trim button will restore the transmitter to the original factory characterization curve. The Recall Factory Trim button can be useful for recovering from an inadvertent zero trim or inaccurate pressure source.

When the recall factory trim function is used, the transmitter's upper and lower trim values are set to the values configured at the factory. If custom trim values were specified when the transmitter was ordered, the device will recall those values. If custom trim values were not specified, the device will recall the upper and lower sensor limits.

Last DP sensor trim point

The current upper and lower trim points can be seen under the *Last DP Sensor Trim Point* heading.

4.3.4 Static pressure sensor calibration

Mass and Energy Flow Fast Keys	1, 2, 5, 4
Direct Process Var. Output Fast Keys	1, 2, 4, 4

The *Static Pressure Calibration* Tab allows the user to complete either a zero trim procedure or a full SP sensor trim, see Figure 4-3.

Figure 4-3. Calibration - static pressure calibration tab

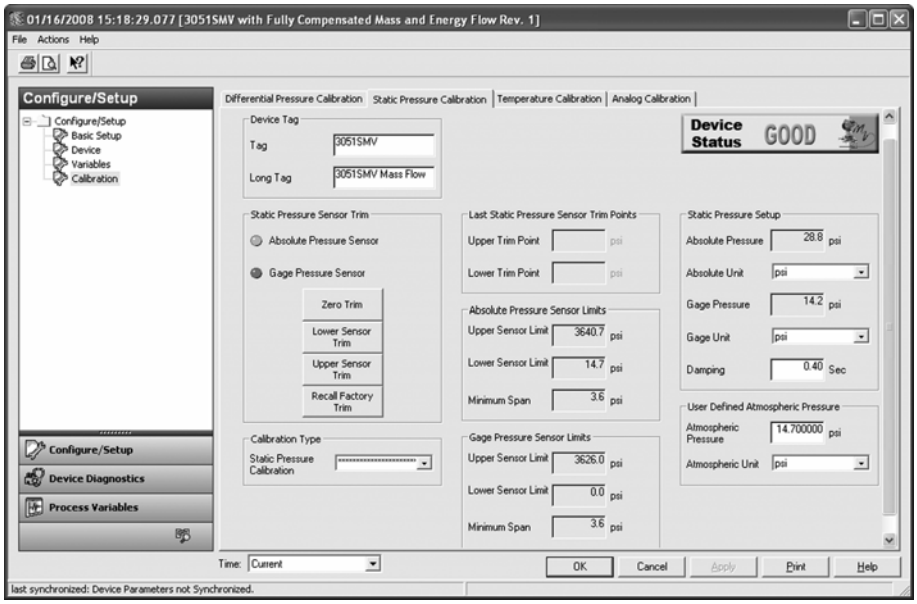

Zero trim and lower sensor trim

The type of static pressure sensor equipped in the transmitter can be determined by referring to the *Static Pressure Sensor Type* heading. This determines whether a zero trim (gage sensor) or lower sensor trim (absolute sensor) required to correct for mounting position effects.

To perform a zero trim on a gage static pressure sensor, click on the Zero Trim button under the *Static Pressure Sensor Trim* heading and follow the on-screen prompts. The transmitter must be within five percent or less of the maximum span of true zero (zero-based) in order to calibrate with zero trim function.

To correct for mounting position effects on transmitters equipped with an absolute static pressure sensor, perform a lower sensor trim. This is accomplished by clicking on the Lower Sensor Trim button and following the on-screen prompts. The lower sensor trim function provides an offset correction similar to the zero trim function, but it does not require a zero-based input.

Upper and lower sensor trim

To perform a Static Pressure Full Sensor Trim, first click on the Lower Sensor Trim button and follow the on-screen prompts. Next, click on the Upper Sensor Trim button and follow the on-screen prompts.

Note
It is possible to degrade the performance of the transmitter if the full sensor trim is done improperly or with inaccurate calibration equipment. Use a pressure input source that is at least three times more accurate than the transmitter and allow the pressure input to stabilize for ten seconds before entering any values.

Recall factory trim

The Recall Factory Trim button will restore the transmitter to the original factory characterization curve. The Recall Factory Trim button can be useful for recovering from an inadvertent zero trim or inaccurate pressure source.

When the recall factory trim function is used, the transmitter's upper and lower trim values are set to the values configured at the factory. If custom trim values were specified when the transmitter was ordered, the device will recall those values. If custom trim values were not specified, the device will recall the upper and lower sensor limits.

Last static pressure sensor trim

The current upper and lower trim points can be seen under the *Last Static Pressure Sensor Trim Points* heading.

Calibration type

The calibration type drop-down menu allows the user to note the type of device last used to calibrate the sensor (either Differential, Gage, or Absolute). This field does not affect the calibration of the device.

4.3.5 Process temperature sensor calibration

Mass and Energy Flow Fast Keys	1, 2, 5, 5
Direct Process Var. Output Fast Keys	1, 2, 4, 5

The Temperature Calibration tab allows the user to perform a sensor trim and configure the sensor matching of a process temperature sensor, see Figure 4-4.

Figure 4-4. Calibration - temperature calibration tab

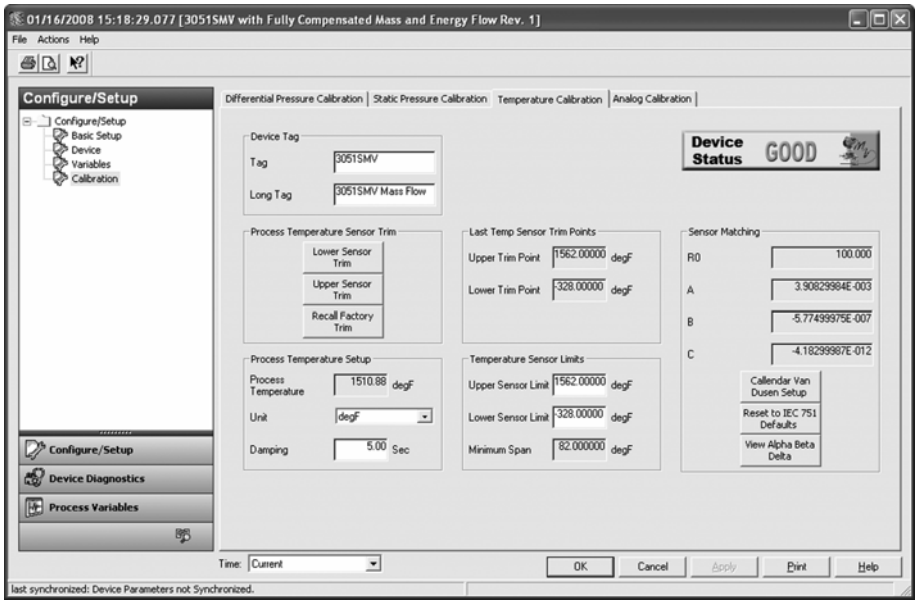

Process temperature upper and lower sensor trim

To calibrate the Process Temperature Input using the sensor trim, follow the procedure shown below.

1. Set up a Temperature Calibrator to simulate a Pt 100 (100-ohm platinum, alpha 385 RTD). Wire the two red wires from the 3051S MultiVariable Transmitter terminal block to one connection, and the two white wires to the other connection. See "Install Optional Process Temperature Input (Pt 100 RTD Sensor)" on page 14 for more information.

2. Adjust the calibrator/RTD simulator to a test point temperature value that represents a minimum process temperature (for example, 32 °F or 0 °C). Click on the Lower Sensor Trim button under the *Process Temperature Sensor Trim* heading and follow the on-screen prompts.

3. Adjust the calibrator/RTD simulator to a test point temperature value that represents the maximum process temperature (for example, 140 °F or 60 °C). Click on the Upper Sensor Trim button under the *Process Temperature Sensor Trim* heading and follow the on-screen prompts.

Recall factory trim

The Recall Factory Trim button will restore the transmitter to the original factory calibration settings.

When the recall factory trim function is used, the transmitter's upper and lower trim values are set to the values configured at the factory. If custom trim values were specified when the transmitter was ordered, the device will recall those values. If custom trim values were not specified, the device will recall the upper and lower sensor limits.

Transmitter RTD sensor matching using callendar-van dusen constants

The 3051S MultiVariable accepts Callendar-Van Dusen constants from a calibrated RTD schedule and generates a special custom curve to match that specific sensor Resistance vs. Temperature performance. Matching the specific sensor curve with the transmitter configuration enhances the temperature measurement accuracy.

Under the *Sensor Matching* heading, the Callendar-Van Dusen constants R_0, A, B, and C can be viewed. If the Callendar-Van Dusen constants are known for the user's specific Pt 100 RTD sensor, the constants R_0, A, B, and C may be edited by clicking on the Callendar-Van Dusen Setup button and following the on-screen prompts.

The user may also view the α, ß, and δ Coefficients by clicking on the View Alpha, Beta, Delta button. The constants R_0, α, ß, and δ may be edited by clicking on the Callendar-Van Dusen Setup button and following the on-screen prompts. To reset the transmitter to the IEC 751 Defaults, click the Reset to IEC 751 Defaults button.

4.3.6 Analog calibration

Mass and Energy Flow Fast Keys	1, 2, 5, 2
Direct Process Var. Output Fast Keys	1, 2, 4, 5

Figure 4-5. Calibration - analog calibration tab

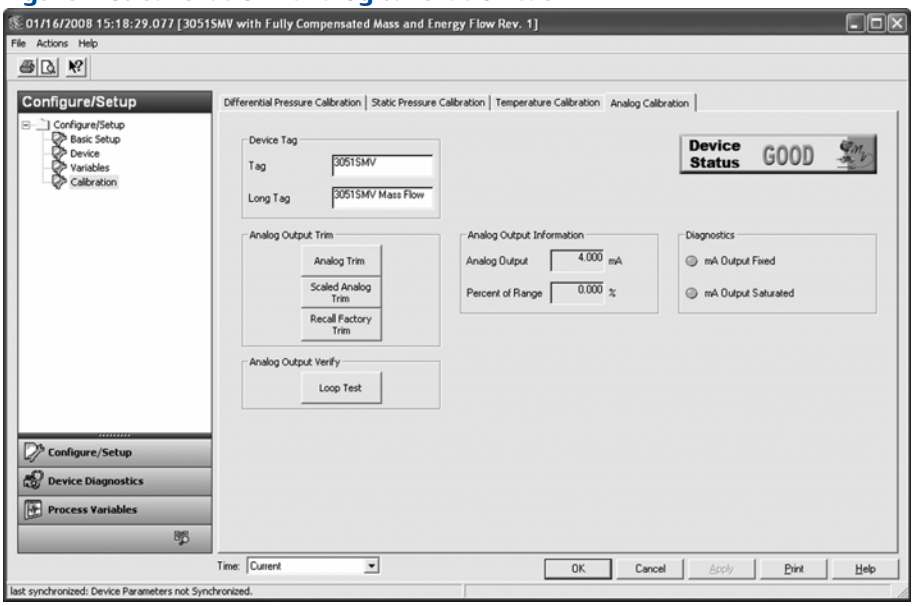

Analog output trim

The Analog Output Trim commands allow the user to adjust the transmitter's current output at the 4 and 20 mA points to match the plant standards. This command adjusts the digital to analog signal conversion, see Figure 4-5.

To perform an analog trim, click on the Analog Trim button and follow the on-screen prompts.

Scaled analog output trim

The scaled analog trim command matches the 4 and 20 mA points to a user selectable reference scale other than 4 and 20 mA (for example, 1 to 5 volts if measuring across a 250 ohm load, or 0 to 100 percent if measuring from a Distributed Control System (DCS)). To perform a scaled analog trim, connect an accurate reference meter, click on the Scaled Analog Trim button, and follow the on-screen prompts.

Note
Use a precision resistor for optimum accuracy. When adding a resistor to the loop, ensure that the power supply is sufficient to power the transmitter to a 23 mA (maximum high alarm) output with the additional loop resistance.

Analog output loop test

Under the *Analog Output Verify* heading, a loop test can be performed by clicking the Loop Test button. The loop test command verifies the output of the transmitter, the integrity of the loop, and the operations of any recorders or similar devices installed in the loop.

Analog output diagnostic alerts

Two diagnostic alerts are shown under the *Diagnostics* heading.

The first is *mA Ouput Fixed*. This alerts the user that the 4-20 mA analog output signal is fixed at a constant value and is not representative of the HART Primary Variable. This diagnostic alert may also be triggered if “Loop Current Mode” is disabled, the device is in alarm, or if “Test Calculation” is running.

The second diagnostic is *mA Output Saturated*. This alerts the user that the measured Primary Variable has exceeded the range points defined for the 4-20 mA analog output signal. The analog output is fixed at the user-defined high or low saturation point and is not representative of the current HART Primary Variable.

4.4 Transmitter functional tests

Figure 4-6. Transmitter functional tests screen

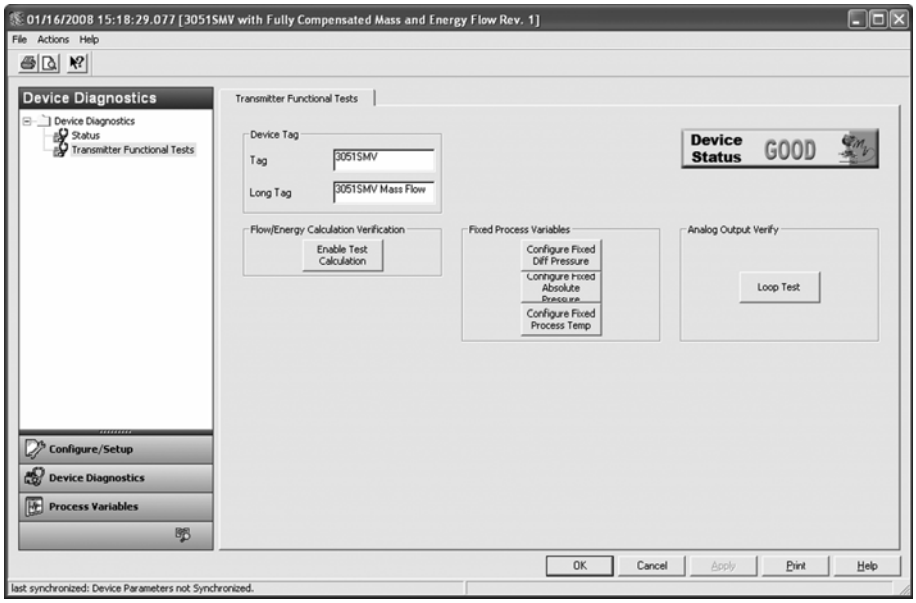

4.4.1 Flow/energy calculation verification (Test calculation)

Mass and Energy Flow Fast Keys	1, 2, 3

(Fully Compensated Mass and Energy Flow Feature Board only):

The Flow and Energy Calculation Verification Test allows the user to verify the flow configuration of the 3051S MultiVariable Transmitter by entering expected values for the Differential Pressure, Static Pressure and Process Temperature variables. Under the *Flow/Energy Calculation Verification* heading, perform the following steps:

1. Click the Enable Test Calculation button.
2. Select Simulate DP option. Click Next.
3. Select DP Units from the drop-down menu. Click Next.
4. Enter the DP Value corresponding to the desired flow rate simulation. Click Next.
5. Repeat steps 1-3 for static pressure (Simulate AP/GP) and process temperature (Simulate PT), if applicable.
6. Select View Results. Click Next. The simulated flow rate and corresponding flow properties will be shown. Click Next.
7. Select Exit. Click Next. Leaving the *Enable Test Calculation* window automatically returns all process variables fixed by the test calculation method to live process variable measurements.

4.4.2 Configuring fixed process variables

Mass and Energy Flow Fast Keys	1, 2, 4
Direct Process Var. Output Fast Keys	1, 2, 3

Under the *Fixed Process Variables* heading, the user may temporarily set the Differential Pressure, Static Pressure or Process Temperature to a user defined fixed value for testing purposes. Once the user leaves the *Configure Fixed Variable* method, the fixed process variable will be automatically returned to a live process variable measurement.

4.4.3 Analog output loop test

Mass and Energy Flow Fast Keys	1, 2, 2
Direct Process Var. Output Fast Keys	1, 2, 2

Under the *Analog Output Verify* heading, a Loop Test can be performed by clicking the Loop Test button. The loop test command verifies the output of the transmitter, the integrity of the loop, and the operations of any recorders or similar devices installed in the loop.

4.5 Process variables

4.5.1 Process variable tabs

Mass and Energy Flow Fast Keys	1, 1
Direct Process Var. Output Fast Keys	1, 1

The *Process Variables* screen shows a graphical representation of the respective variable. An example of the *Primary Variable* tab is shown in Figure 4-7. The chart on these Process Variables tabs will begin plotting when the user first navigates to the screen, and will only continue plotting while the user is viewing this tab. The user may view a larger version of the chart by clicking on the Large Chart button.

Each of the four digital output variables has a screen similar to the one shown in Figure 4-7.

Figure 4-7. Process variables - primary variable tab

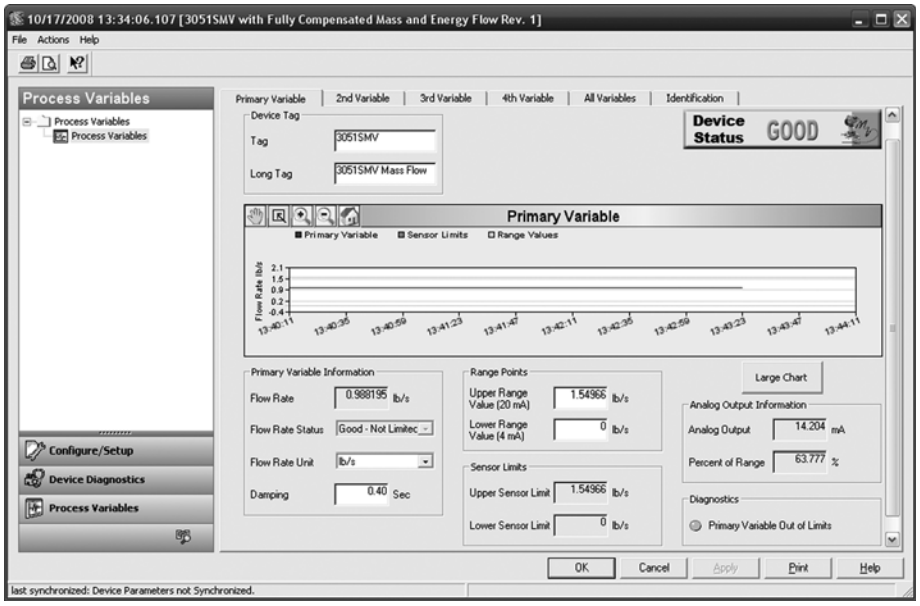

4.5.2 All variables tab

The *All Variables* tab allows the user to view a complete overview of all variables available within the device.

Figure 4-8. Process variables - all variables tab

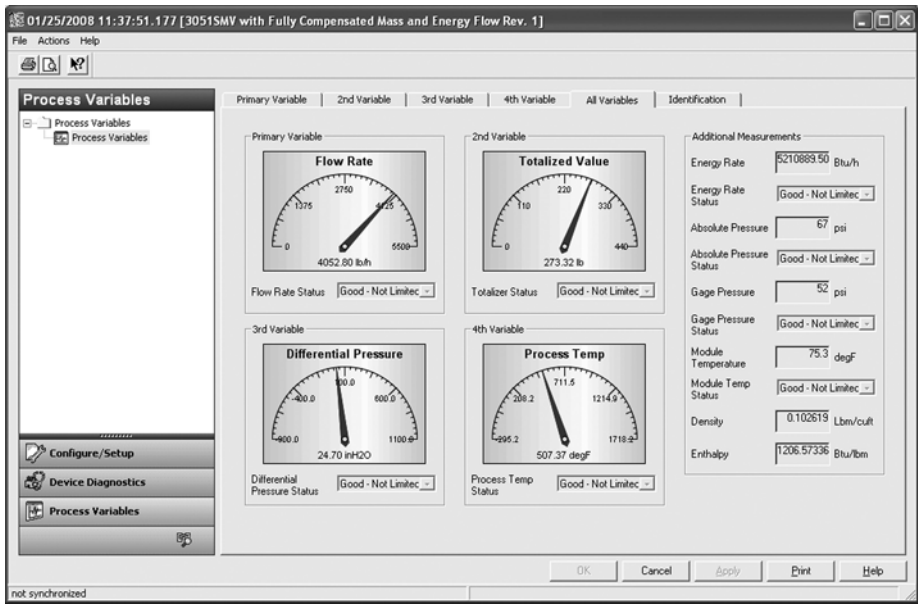

4.6 Field upgrades and replacements

4.6.1 Disassembly considerations

- During disassembly, do not remove the instrument cover in explosive atmospheres when the circuit is live as this may result in serious injury or death. Also, be aware of the following:
- Follow all plant safety rules and procedures.
- Isolate and vent the process from the transmitter before removing the transmitter from service.
- Disconnect optional process temperature sensor leads and cable.
- Remove all other electrical leads and conduit.
- Detach the process flange by removing the four flange bolts and two alignment screws that secure it.
- Do not scratch, puncture, or depress the isolating diaphragms.
- Clean isolating diaphragms with a soft rag and a mild cleaning solution, then rinse with clear water.
- Whenever the process flange or flange adapters are removed, visually inspect the PTFE o-rings. Emerson Process Management recommends reusing o-rings if possible. If the o-rings show any signs of damage, such as nicks or cuts, they should be replaced.

4.6.2 Housing assembly including feature board electronics

Field device labels

The SuperModule label reflects the replacement model code for reordering a complete transmitter, including both the SuperModule assembly and PlantWeb housing. The 300S MultiVariable Transmitter model code stamped on the PlantWeb housing nameplate can be used to reorder the PlantWeb housing assembly.

Upgrading feature board electronics

The 3051S MultiVariable Transmitter allows for feature board electronics upgrades. Different feature board electronics assemblies provide new functionality and are easily interchanged for upgrade. When replacing or upgrading the feature board electronics, use the “Rosemount 300SMV Housing Kit” on page 33 which also includes the appropriate PlantWeb housing.

Upgrading or replacing the housing assembly including feature board electronics

Remove the feature board

The 3051S MultiVariable Transmitter feature board is located opposite the field terminal side in the PlantWeb housing. To remove the feature board, perform the following procedure:

1. Remove the housing cover opposite the field terminal side.
2. Remove the LCD Display, if applicable. To do this, hold in the two clips and pull outward. This will provide better access to the two screws located on the feature board.
3. Loosen the two captive screws located on the feature board.
4. Pull out the feature board to expose and locate the SuperModule connector, see Figure 4-10.
5. Press the locking tabs and pull the SuperModule connector upwards (avoid pulling wires). Housing rotation may be required to access locking tabs. See "Housing Rotation" on page 5 for more information.

Figure 4-9. SuperModule connector view

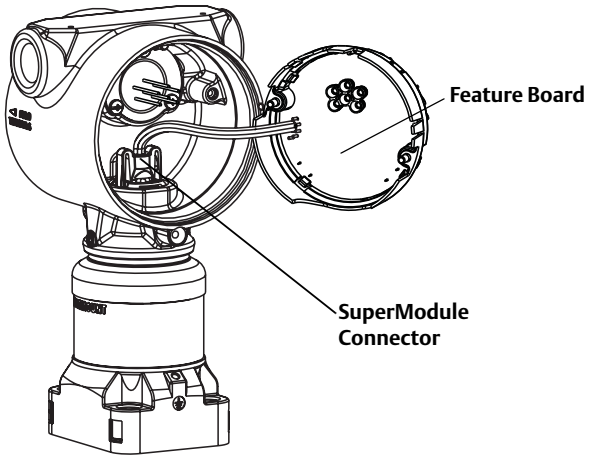

Separate the SuperModule assembly from the housing

1. To prevent damage to the SuperModule connector, remove the feature board from the SuperModule assembly and remove the connector before separating the SuperModule assembly from the housing.
2. Loosen the housing rotation set screw by one full turn with a $^{3}/_{32}$-in. hex wrench.
3. Unscrew the housing from the SuperModule threads.

Figure 4-10. SuperModule connector

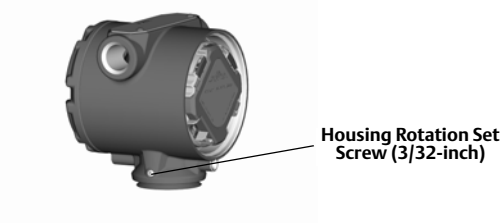

Note
The V-Seal (03151-9061-0001) must be installed at the bottom of the housing.

Figure 4-11. V-Seal

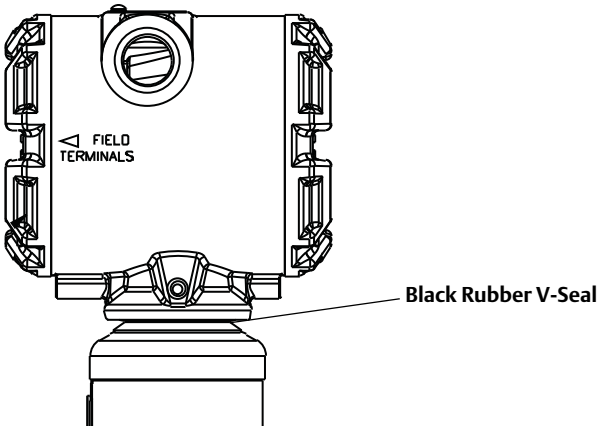

Attach the SuperModule assembly to the plantweb housing

1. Apply a light coat of low temperature silicon grease to the SuperModule threads and o-ring.
2. Thread the housing completely onto the SuperModule assembly. The housing must be no more than one full turn from flush with the SuperModule assembly to comply with flameproof/explosion-proof requirements.
3. Tighten the housing rotation set screw using a $^{3}/_{32}$-in. hex wrench to a recommended torque of 30 in-lbs (3.4 N-m).

Install feature board in the plantweb housing

1. Apply a light coat of low temperature silicon grease to the SuperModule connector o-ring.
2. Insert the SuperModule connector into the top of the SuperModule assembly. Ensure the locking tabs are fully engaged.
3. Gently slide the feature board into the housing, making sure the pins from the PlantWeb housing properly engage the receptacles on the feature board.
4. Tighten the captive screws.
5. ⚠ Attach the PlantWeb housing cover and tighten so that metal contacts metal to meet flameproof/explosion-proof requirements.

4.6.3 Terminal block

Electrical connections are located on the terminal block in the compartment labeled “FIELD TERMINALS.” The terminal block may be replaced or upgraded to add transient protection. Part numbers can be found in “Spare Parts” on page 37.

Loosen the two captive screws (see Figure 4-12 on page 26), and pull the entire terminal block out.

Figure 4-12. Terminal blocks

Terminal Block without optional Process Temperature Connections	Terminal Block with optional Process Temperature Connections
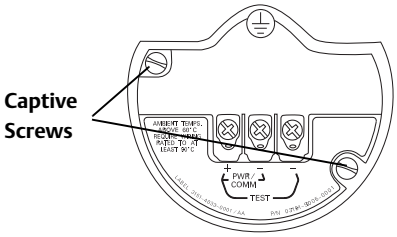	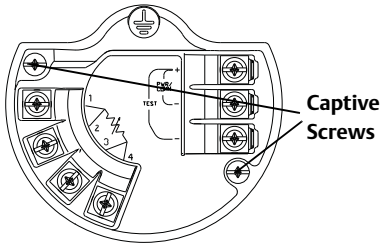

1. Gently slide the terminal block into the housing, making sure the pins from the PlantWeb housing properly engage the receptacles on the terminal block.
2. Tighten the captive screws on the terminal block.
3. ⚠ Attach the PlantWeb housing cover and tighten so that metal contacts metal to meet flameproof/explosion-proof requirements.

4.6.4 LCD display

Transmitters ordered with the LCD display will be shipped with the display installed. Installing the display on an existing 3051S MultiVariable Transmitter requires the LCD display kit (part number 03151-9193-0001 for aluminum housing and 03151-9193-0004 for stainless steel housing).

Use the following procedure and Figure 4-13 to install the LCD display:

1. If the transmitter is installed in a loop, then secure the loop and disconnect power.

⚠ 2. Remove the transmitter cover on the feature board side (opposite the field terminals side). Do not remove the instrument covers in explosive environments when the circuit is live.

3. Engage the four-pin connector into the feature board and snap the LCD display into place.

⚠ 4. Install the display cover and tighten to insure metal to metal contact in order to meet flameproof/explosion-proof requirements.

Figure 4-13. Optional LCD display

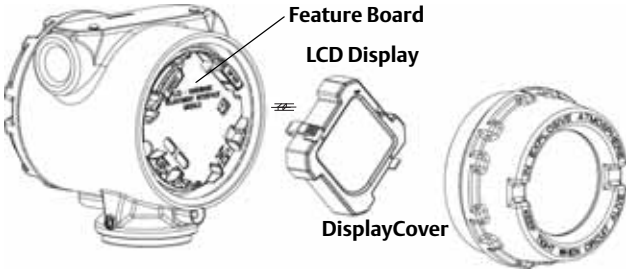

4.6.5 Flange and drain vent

The 3051S MultiVariable Transmitter is attached to the process connection flange by four bolts and two alignment cap screws.

1. Remove the two alignment cap screws.

Figure 4-14. Alignment cap screws

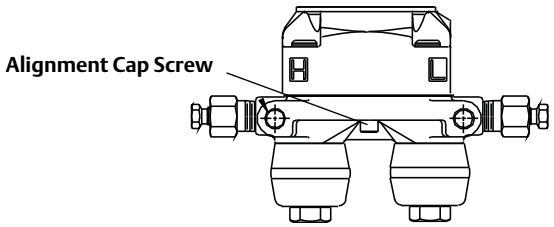

2. Remove the four bolts and separate the transmitter from the process connection, but leave the process connection flange in place and ready for re-installation.

Note
If the installation uses a manifold, see "Manifold Operation to Zero the Differential Pressure Sensor" on page 20.

1. Inspect the SuperModule PTFE o-rings. If the o-rings are undamaged, they may be reused. Emerson Process Management recommends reusing o-rings if possible. If the o-rings show any signs of damage, such as nicks or cuts, they should be replaced (part number 03151-9042-0001 for glass-filled PTFE and part number 03151-9042-0002 for graphite-filled PTFE).

Note
If replacing the o-rings, be careful not to scratch or deface the o-ring grooves or the surface of the isolating diaphragm when removing the damaged o-rings.

2. Install the process flange on the SuperModule process connection. To hold the process flange in place, install the two alignment cap screws finger tight (these screws are not pressure retaining). Do not overtighten; this will affect module-to-flange alignment.

3. Install the appropriate flange bolts.
   a. If the installation requires a 1/4–18 NPT connection(s), use four 1.75-in. flange bolts. Finger tighten the bolts. Go to Step d.
   b. If the installation requires a 1/2–14 NPT connection(s), use flange adapters and four 2.88-in. process flange/adapter bolts.
   c. Hold the flange adapters and adapter o-rings in place while finger-tightening the bolts.
   d. Tighten the bolts to the initial torque value using a crossed pattern. See Table 4-1 for appropriate torque values.
   e. Tighten the bolts to the final torque value using a crossed pattern. See Table 4-1 for appropriate torque values. When fully tightened, the bolts should extend through the top of the module housing.
   f. Torque alignment screws to 30 in-lbs. (3.4 N-m). If the installation uses a conventional manifold, then install flange adapters on the process end of the manifold using the 1.75-in. flange bolts supplied with the transmitter.

Table 4-1. Bolt Installation torque values

Bolt Material	Initial Torque Value	Final Torque Value
CS-ASTM-A449 Standard	300 in-lb. (34 N-m)	650 in-lb. (73 N-m)
316 SST—Option L4	150 in-lb. (17 N-m)	300 in-lb. (34 N-m)
ASTM-A-193-B7M—Option L5	300 in-lb. (34 N-m)	650 in-lb. (73 N-m)
Alloy K-500—Option L6	300 in-lb. (34 N-m)	650 in-lb. (73 N-m)
ASTM-A-453-660—Option L7	150 in-lb. (17 N-m)	300 in-lb. (34 N-m)
ASTM-A-193-B8M—Option L8	150 in-lb. (17 N-m)	300 in-lb. (34 N-m)

4. If the SuperModule PTFE o-rings are replaced, re-torque the flange bolts and alignment cap screws after installation to compensate for seating of the PTFE o-ring.

5. Install the drain/vent valve.
   a. Apply sealing tape to the threads on the seat. Starting at the base of the valve with the threaded end pointing toward the installer, apply two clockwise turns of sealing tape.
   b. Take care to place the opening on the valve so that process fluid will drain toward the ground and away from human contact when the valve is opened.
   c. Tighten the drain/vent valve to 250 in-lb. (28.25 N-m).
   d. Tighten the stem to 70 in-lb. (8 N-m)

Note

Due to the sensitivity of the Range 1 DP Sensor, extra steps are required to optimize performance. It is necessary to temperature soak the assembly using the following procedure.

1. After replacing o-rings on DP Range 1 transmitters and re-installing the process flange, expose the transmitter to a temperature of 185 °F (85 °C) for two hours.
2. Re-tighten the flange bolts in a cross pattern.
3. Again, expose the transmitter to a temperature of 185 °F (85 °C) for two hours before calibration.

4.6.6 SuperModule assembly

To reorder an upgrade or replacement Supermodule Assembly, use the 3051S MultiVariable Transmitter ordering table shown in “Ordering information” on page 27 but replace the housing option code with ‘00’.

1. Remove the Housing Assembly per “Upgrading or replacing the housing assembly including feature board electronics” on page 24.
2. Remove currently installed SuperModule Assembly from process flange per “Flange and drain vent” on page 27.
3. Reassemble replacement or upgraded SuperModule Assembly to process flange per “Flange and drain vent” on page 27.
4. Reassemble the Housing assembly per “Upgrading or replacing the housing assembly including feature board electronics” on page 24.

Section 5 Troubleshooting

Overview . . . . . page 9
Device diagnostics . . . . . page 9
Measurement quality and limit status . . . . . page 13
EA Communication Troubleshooting . . . . . page 14
Measurement troubleshooting . . . . . page 15

5.1 Overview

This section contains information for troubleshooting the 3051S MultiVariable Transmitter. Diagnostic messages are communicated via the LCD Display or a HART host.

5.2 Device diagnostics

5.2.1 HART host diagnostics

The 3051S MultiVariable Transmitter provides numerous diagnostic alerts via a HART host. These alerts can be viewed in Engineering Assistant 6.1 or later, 475 Field Communicator, or AMS Device Manager.

Table lists the possible diagnostic alerts that may be shown with the 3051S MultiVariable Transmitter. The tables also give a brief description of what each alert indicates and the recommended actions.

Table 5-2 provides summarized maintenance and troubleshooting suggestions for the most common operating problems. If a malfunction is suspected despite the absence of any diagnostic messages on the 475 Field Communicator or host, follow the procedures described here to verify that transmitter hardware and process connections are in good working order.

5.2.2 LCD display diagnostics

In addition to output, the LCD displays abbreviated operation, error, and warning messages for troubleshooting. Messages appear according to their priority; normal operating messages appear last. To determine the cause of a message, use a HART host to further interrogate the transmitter. A description of each LCD diagnostic message follows.

Error messages

An error indicator message appears on the LCD display to warn of serious problems affecting the operation of the transmitter. The LCD displays an error message until the error condition is corrected; *ERROR* appears at the bottom of the display.

Warning messages

Warning messages appear on the LCD display to alert the user of user-repairable problems with the transmitter, or current transmitter operations. Warning messages appear alternately with other transmitter information until the warning condition is corrected or the transmitter completes the operation that warrants the warning message.

Table 5-1. Diagnostic message troubleshooting

LCD Messages	Host Diagnostic Message	Possible Problems	Recommended Actions
AP GP LIMIT	Static Pressure Out of Limits	The Static Pressure is exceeding the sensor limits.	Verify process conditions are within the sensor limits.
BOARD COMM ERROR	Feature Board Communication Error	The feature board electronics are experiencing communication problems. This problem may be temporary and could clear automatically.	Cycle power to the device. If the problem persists, replace the feature board electronics.
CURR SAT	Primary Variable Analog Output Saturated	The primary variable has exceeded the range points defined for the 4-20 mA analog output signal. The analog output is fixed at the high or low saturation point and is not representative of the current process conditions.	Verify the process conditions and modify the Analog Range Values if necessary.
DP LIMIT	Differential Pressure Out of Limits	The Differential Pressure is exceeding the sensor limits.	Verify that the process conditions are within the sensor limits.
FAIL BOARD ERROR	Feature Board Error	The feature board electronics have detected an unrecoverable failure.	Replace the feature board electronics.
FAIL PT ERROR	Process Temperature Sensor Failure	The process temperature sensor has failed or is incorrectly wired.	Check the sensor wiring and fix any shorts or open connections. If the sensor wiring is correct, check the PT sensor and replace if necessary. If the problems persists, replace the feature board electronics.
FAIL SENSOR ERROR	Sensor Module Failure	The SuperModule assembly is providing measurements that may no longer be valid.	Verify the Sensor Module Temperature is within the operating limits of the transmitter. Replace SuperModule assembly if necessary.
FLOW CONFIG	Updating Flow Configuration - Flow Values Constant	A flow Configuration is currently being downloaded to the transmitter. During the download, the flow output will be fixed at the last calculated value. Once the download is complete the transmitter will resume live calculations.	No action is required. Please wait until the flow configuration download is complete before performing other configuration tasks.
FLOW INCOMP ERROR	Energy Invalid for Flow Configuration	The Energy Flow variable is not compatible with the current flow configuration but is mapped to the totalizer, a process variable, or a burst variable.	These discrepancies can be fixed with the following actions: • Verify configuration for the fluid type supports Energy Flow calculation. • Do not specify Energy Flow for the totalizer, process variables or burst variables unless the transmitter has a compatible flow configuration.
FLOW INCOMP ERROR	Static Pressure Sensor Missing	A static pressure sensor is needed for the current flow configuration.	Download a flow configuration that is compatible with the sensors equipped in the device or replace the module with a model that includes a static pressure sensor.
FLOW INCOMP ERROR	Flow Configuration Download Error	The flow configuration did not successfully download to the transmitter.	Redownload the flow configuration using the Engineering Assistant software.
FLOW LIMIT	Flow Output Out of Limits	The flow output value is exceeding the flow rate operating limits.	Verify the process conditions, and modify the flow configuration parameters and operating ranges as needed.
FLOW LIMIT	Energy Flow Out of Limits	The energy flow value is exceeding the flow rate operating limits.	Verify the process conditions, and modify the flow configuration parameters and operating ranges as needed.
LCD UPDATE ERROR	LCD Update Error	The LCD is not receiving updates from the feature board electronics.	Examine the LCD Connector and reset the LCD. If the problem persists, first replace the LCD then replace the feature board electronics if necessary.

LCD Messages	Host Diagnostic Message	Possible Problems	Recommended Actions
(LCD is blank)	LCD Update Error	The LCD is no longer powered.	Examine the LCD Connector and reset the LCD. If the problem persists, first replace the LCD then replace the feature board electronics if necessary.
PT LIMIT	Process Temperature Out of Limits	The Process Temperature sensor is exceeding the user defined sensor limits.	Verify the process conditions and adjust limits if necessary. Check the Process Temperature sensor and replace if necessary.
RVRSE FLOW	Reverse Flow Detected	The transmitter is measuring a negative differential pressure.	Verify the process conditions and the transmitter installation.
SNSR COMM ERROR	Module Communication Failure	Communication between the sensor module and the feature board electronics have been lost.	Verify the connection between the sensor module and the feature board electronics. Replace the SuperModule assembly and/or feature board electronics if necessary.
SNSR INCOMP ERROR	Sensor Module Incompatibility	The SuperModule assembly is not compatible with the feature board electronics. The SuperModule assembly is not equipped with a differential pressure sensor or it is an older revision of the sensor module.	Replace the SuperModule assembly with one that is compatible with the 3051S MultiVariable Transmitter Plantweb Housing.
SNSR MISSING ERROR	Sensor Missing	The sensor mapped to the primary variable is not present.	Remap the primary variable to a sensor that is present.
SNSRT LIMIT	Sensor Temperature Out of Limits	The Sensor Module Temperature is exceeding the sensor limits.	Verify ambient conditions are within the sensor limits.
XMTR Info	Non-Volatile Memory Warning	Transmitter information data is incomplete. Transmitter operation will not be affected.	Replace the feature board electronics at next maintenance shutdown.
XMTR Info Error	Non-Volatile Memory Error	Non-volatile data of the device is corrupted.	Replace the feature board electronics.
(Other message)(1)	Maintenance Required	The transmitter may not be operating properly and requires attention.	Check other warning messages.
(Other message)(1)	mA Output Fixed	The 4-20 mA Analog Output Signal is fixed at a constant value and is not representative of the HART primary variable	Disable Loop Current Mode.
(Other message)(1)	Primary variable out of limits	The primary variable is outside the range of the transmitter.	View other diagnostic messages to determine which variable is out of limits
(Other message)(1)	Non-primary variable out of limits	A variable other than the primary variable is outside the range of the transmitter.	View other diagnostic messages to determine which variable is out of limits
(LCD is reading normally)	Configuration changed	A modification has been made to the device configuration using a host other than AMS.	No action is required; message will clear after a change is made using AMS.
(LCD is reading normally)	Cold start	Transmitter was restarted.	No action is required; message will clear automatically.

(1) LCD messages will vary as it is specific to the possible problem.

Table 5-2. Transmitter troubleshooting

Symptom	Corrective Actions
Transmitter milliamp output is zero	Verify power is applied to signal terminals
	Check power wires for reversed polarity
	Verify terminal voltage is 12 to 42.4 Vdc
	Check for open diode across test terminal on 3051S MultiVariable terminal block
Transmitter not communicating with 375, AMS, or Engineering Assistant	Verify the output is between 4 and 20 mA or saturation levels
	Verify clean DC Power to transmitter (Max AC noise 0.2 volts peak to peak)
	Check loop resistance, 250-1321 Ω Loop Resistance = (Power supply voltage - transmitter voltage) / loop current
	Check if unit is at an alternate HART address
Transmitter milliamp output is low or high	Verify applied process variables
	Verify 4 and 20 mA range points and flow configuration
	Verify output is not in alarm or saturation condition
	An analog output trim or sensor trim may be required
Transmitter will not respond to changes in measured process variables	Check to ensure that the equalization valve is closed
	Check test equipment
	Check impulse piping or manifold for blockage
	Verify primary variable measurement is between the 4 and 20 mA set points
	Verify output is not in alarm or saturation condition
	Verify transmitter is not in Loop Test, Multidrop, Test Calculation, or Fixed Variable mode
Digital Variable output is low or high	Check test equipment (verify accuracy)
	Check impulse piping for blockage or low fill in wet leg
	Verify transmitter sensor trim
	Verify measured variables are within transmitter limits
Digital Variable output is erratic	Check application for faulty equipment in process line
	Verify transmitter is not reacting directly to equipment turning on/off
	Verify damping is set properly for application
Milliamp output is erratic	Verify power source to transmitter has adequate voltage and current
	Check for external electrical interference
	Verify transmitter is properly grounded
	Verify shield for twisted pair is only grounded at one end
Transmitter output is normal, but LCD is off and diagnostics indicate an LCD problem	Verify LCD display is installed correctly Replace LCD display
Transmitter indicating a flow value and/or DP value during no flow condition	Zero DP sensor Verify DP Low Flow Cutoff setting

5.3 Measurement quality and limit status

The 3051S MultiVariable Transmitter is compliant with the HART Revision 6 Standard. One of the most noticeable enhancements available with the HART 6 standard is that each variable has a measurement quality and limit status. These statuses can be viewed in AMS, on a 475, or with any HART 6 compatible host system. In AMS, variable statuses can be viewed by selecting Variables in the upper left menu tree under the *Configure/Setup* heading.

Figure 5-1. Quality and limit status

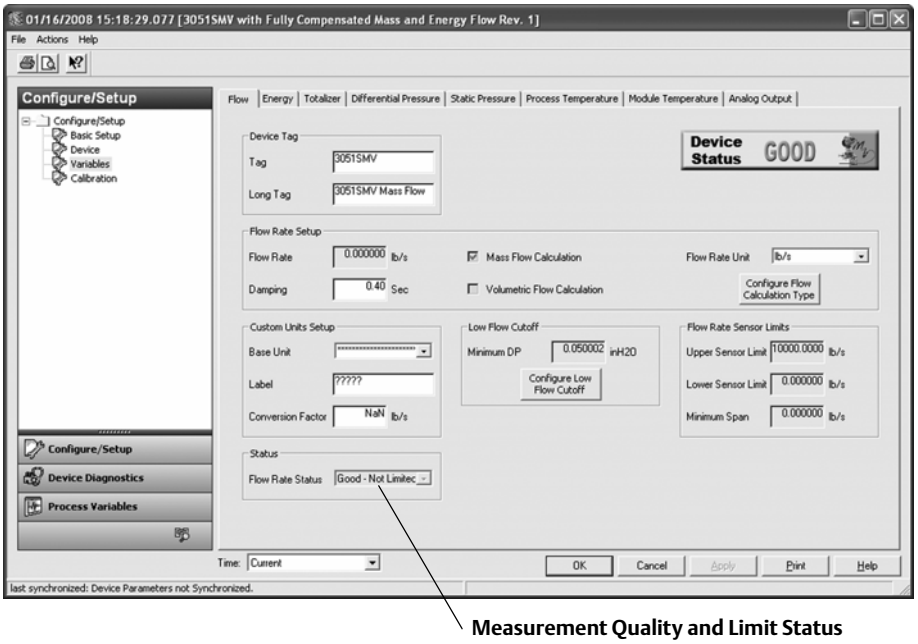

Each variable status reading consists of two parts separated by a hyphen; Measurement Quality and Limit Status.

Possible measurement quality readings

Good – Displayed during normal device operation.

Poor Accuracy – Indicates the accuracy of the variable measurement has been compromised. Example: The module temperature sensor failed and is no longer compensating the differential pressure and status pressure measurements.

Bad – Indicates the variable has failed. Example: A differential pressure, static pressure, or process temperature sensor failure.

Possible limit status readings

Not Limited – Displayed during normal device operation.

High Limited – Indicates the current variable reading has gone above the transmitter's maximum possible reading and is no longer representative of the actual variable measurement.

Low Limited – Indicates the current variable reading has gone below the transmitter's minimum possible reading and is no longer representative of the actual variable measurement.

Constant – Indicates the variable reading is set to a fixed value. Example: The totalizer has been stopped.

5.4 Engineering assistant communication troubleshooting

Table 5-3 identifies the most common communication issues between the Engineering Assistant software and the Rosemount 3051S MultiVariable Transmitter.

Table 5-3. Corrective action for engineering assistant communication problems

Symptom	Corrective action
No Communication between the Engineering Assistant software and the Rosemount 3051S MultiVariable Transmitter	Loop Wiring (HART) • HART protocol communication requires a loop resistance value between 250–1321 ohms, inclusive. • Check for adequate voltage to the transmitter. See "Load limitations" on page 17. • Check for intermittent shorts, open circuits, and multiple grounds. • Check for capacitance across the load resistor. Capacitance should be less than 0.1 microfarad.
	Engineering Assistant • Verify correct COM port selected. • Verify laptop computer is not in low energy mode (certain laptops disable all COM ports in low energy mode). • Check if HART modem is properly connected. • Check if HART driver is loaded and installed. If using a HART USB port modem, install drivers from CD-ROM provided with USB modem. • Check if another HART configuration program, such as AMS, is currently open. Only one HART configuration program may be opened at a time. • Verify the COM port buffer setting is set to the lowest setting (1) in the advanced COM port settings and re-boot the computer. • Set the *Device Address* to search All.

5.5 Measurement troubleshooting

The transmitter provides a means to display the current process variables and flow calculations. If the process variable reading is unexpected, this section provides the symptoms and possible corrective actions.

Table 5-4. Unexpected Process Variable (PV) readings

Symptom	Corrective Action
High PV Reading	Primary Element • Check for restrictions at the primary element. • Check the installation and condition of the primary element. • Note any changes in process fluid properties that may affect output. Impulse piping • Check to ensure that the pressure connection is correct. • Check for leaks or blockage. • Check to ensure that blocking valves are fully open. • Check for entrapped gas in liquid lines or for liquid in gas lines. • Check to ensure that the density of fluid in impulse lines is unchanged. • Check for sediment in the transmitter process flange. • Make sure that process fluid has not frozen within the process flange. Power SupplyUPPLY • Check the output voltage of the power supply at the transmitter. It should be 12 to 42.4 V dc for HART with no load at the transmitter terminals. **Note** Do not use higher than the specified voltage to check the loop, or damage to the transmitter may result. Feature boared electronics • Connect a personal computer and use AMS, Engineering Assistant Software, or the 375 to check the sensor limits to ensure calibration adjustments are within the sensor range and that calibration is correct for the pressure being applied. • Confirm that the electronics housing is properly sealed against moisture. • If the feature board electronics are still not functioning properly, substitute new feature board electronics. Flow configuration (fully compesated mass and energy flow feature boared only) • Verify flow configuration is correct for current application Process Temperature RTD input • Verify all wire terminations • Verify sensor is a Pt 100 RTD • Replace Pt 100 sensor Sensor module • The sensor module is not field repairable and must be replaced if found to be defective. Check for obvious defects, such as a punctured isolating diaphragm or fill fluid loss, and contact your nearest Emerson Process Management Service Center.
Erratic PV Reading	Primary element • Check the installation and condition of the primary element. Loop wiring • Check for adequate voltage to the transmitter. It should be 12 to 42.4 V dc for HART with no load at the transmitter terminals. • Check for intermittent shorts, open circuits, and multiple grounds.
	Preocess pulsation • Adjust the damping. Feature board electronics • Connect a personal computer and use AMS, Engineering Assistant Software, or the 375 to check the sensor limits to ensure calibration adjustments are within the sensor range and that calibration is correct for the pressure being applied. • Confirm that the electronics housing is properly sealed against moisture. • If the feature board electronics are still not functioning properly, substitute new feature board electronics.

Table 5-4. Unexpected Process Variable (PV) readings

Symptom	Corrective Action
	Impulse piping • Check for entrapped gas in liquid lines or for liquid in gas lines. • Make sure that process fluid has not frozen within the process flange. • Ensure that block valves are fully open and equalize valves are fully and tightly closed. Sensore module • The sensor module is not field repairable and must be replaced if found to be defective. Check for obvious defects, such as a punctured isolating diaphragm or fill fluid loss, and contact your nearest Emerson Process Management Service Center.
Low PV Reading or No PV Reading	Primary element • Check the installation and condition of the primary element. • Note any changes in process fluid properties that may affect output. Loop wiring • Check for adequate voltage to the transmitter. It should be 12 to 42.4 V dc for HART with no load at the transmitter terminals. • Check the milliamp rating of the power supply against the total current being drawn for all transmitters being powered. • Check for shorts and multiple grounds. • Check for proper polarity at the signal terminal. • Check loop impedance. • Check the wire insulation to detect possible shorts to ground.
	Impulse piping • Check to ensure that the pressure connection is correct. • Check for leaks or blockage. • Check to ensure that blocking valves are fully open and that bypass valves are tightly closed. • Check for entrapped gas in liquid lines or for liquid in gas lines. • Check for sediment in the transmitter process flange. • Make sure that process fluid has not frozen within the process flange.
	Feature board electronics • Check the sensor limits to ensure calibration adjustments are within the sensor range and that calibration is correct for the pressure being applied. • Confirm that the electronics housing is properly sealed against moisture. • If the feature board electronics are still not functioning properly, substitute new feature board electronics. Flow configuration (fully compensated mass and energy flow feature board only) • Verify flow configuration is correct for current application Process temperature RTD input • Verify all wire terminations • Verify sensor is a Pt 100 RTD • Replace Pt 100 sensor Sensor module The sensor module is not field repairable and must be replaced if found to be defective. Check for obvious defects, such as a punctured isolating diaphragm or fill fluid loss, and contact your nearest Emerson Process Management Service Center.
Sluggish Output Response/Drift	Primary element • Check for restrictions at the primary element. Impulse piping • Check for leaks or blockage. • Ensure that blocking valves are fully open • Check for sediment in the transmitter process flange. • Check for entrapped gas in liquid lines and for liquid in gas lines. • Ensure that the density of fluid in impulse lines is unchanged. • Make sure that process fluid has not frozen within the process flange. Feature board electronics • Confirm that damping is correctly set. • Confirm that the electronics housing is properly sealed against moisture. Sensor module • The sensor module is not field repairable and must be replaced if found to be defective. Check for obvious defects, such as a punctured isolating diaphragm or fill fluid loss, and contact your nearest Emerson Process Management Service Center. • Confirm that the electronics housing is properly sealed against moisture.

Note

The following performance limitations may inhibit efficient or safe operation. Critical applications should have appropriate diagnostic and backup systems in place.

Pressure transmitters contain an internal fill fluid. It is used to transmit the process pressure through the isolating diaphragms to the pressure sensor module. In rare cases, oil loss paths in oil-filled pressure transmitters can be created. Possible causes include: physical damage to the isolator diaphragms, process fluid freezing, isolator corrosion due to an incompatible process fluid, etc.

A transmitter with oil fill fluid loss may continue to perform normally for a period of time. Sustained oil loss will eventually cause one or more of the operating parameters to exceed published specifications as the operating point output continues to drift. Symptoms of advanced oil loss and other unrelated problems include:

- Sustained drift rate in true zero and span or operating point output or both
- Sluggish response to increasing or decreasing pressure or both
- Limited output rate or very nonlinear output or both
- Change in output process noise
- Noticeable drift in operating point output
- Abrupt increase in drift rate of true zero or span or both
- Unstable output
- Output saturated high or low.

Appendix A Specifications and Reference Data

Performance Specifications . . . . . page 9
Functional specifications . . . . . page 15
Physical specifications . . . . . page 20
Dimensional drawings . . . . . page 23
Ordering information . . . . . page 27
Exploded view diagram . . . . . page 36
Spare Parts . . . . . page 37

A.1 Specifications

A.1.1 Performance Specifications

For zero-based spans, reference conditions, silicone oil fill, glass-filled PTFE o-rings, SST materials, or Coplanar flange digital trim values set to equal range points.

Conformance to specification (±3σ (Sigma))

Technology leadership, advanced manufacturing techniques, and statistical process control ensure measurement specification conformance to ±3σ or better.

Reference Accuracy[1]

Models		Classic MV	Ultra for Flow
3051SMV_ _1: Differential Pressure, Static Pressure, & Temperature 3051SMV_ _2: Differential Pressure & Static Pressure			
DP Ranges 2 - 3		±0.04% of span; For spans less than 10:1, $\pm\left[0.01 + 0.004\left(\frac{URL}{span}\right)\right]$% of span	±0.04% of reading up to 8:1 DP turndown from URL; ±[0.04 + 0.0023 (URL/RDG[3])]% reading to 200:1 DP turndown from URL[4]
DP Range 1		±0.10% of span; For spans less than 15:1, $\pm\left[0.025 + 0.005\left(\frac{URL}{span}\right)\right]$% of span	N/A
AP and GP Ranges 3 - 4		±0.055% of span; For spans less than 10:1, $\pm\left[0.0065\left(\frac{URL}{span}\right)\right]$% of span	±0.025% of span; For spans less than 10:1, $\pm\left[0.004\left(\frac{URL}{span}\right)\right]$% of span
Process Temp. RTD Interface[2]		±0.67 °F (0.37 °C)	±0.67 °F (0.37 °C)

Models	Ultra	Classic	Ultra for Flow
3051SMV_ _3: Differential Pressure & Temperature 3051SMV_ _4: Differential Pressure			
Ranges 2 - 4	±0.025% of span; For spans less than 10:1, $0.005 + 0.0035\left(\frac{URL}{span}\right)$% of span	±0.055% of span; For spans less than 10:1, $\pm\left[0.015 + 0.005\left(\frac{URL}{span}\right)\right]$% of span	±0.04% of reading up to 8:1 DP turndown from URL; ±[0.04 + 0.0023 (URL/RDG(3))]% reading to 200:1 DP turndown from URL(4)
Range 5	±0.05% of span; For spans less than 10:1, $\pm\left[0.005 + 0.0045\left(\frac{URL}{span}\right)\right]$% of span	±0.065% of span; For spans less than 10:1, $\pm\left[0.015 + 0.005\left(\frac{URL}{span}\right)\right]$% of span	N/A
Range 1	±0.09% of span; For spans less than 15:1, $\pm\left[0.015 + 0.005\left(\frac{URL}{span}\right)\right]$% of span	±0.10% of span; For spans less than 15:1, $\pm\left[0.025 + 0.005\left(\frac{URL}{span}\right)\right]$% of span	N/A
Range 0	±0.09% of span; For spans less than 2:1, ±0.045% of URL	±0.10% of span; For spans less than 2:1, ±0.05% of URL	N/A
Process Temp. RTD Interface(2)	±0.67 °F (0.37 °C)	±0.67 °F (0.37 °C)	±0.67 °F (0.37 °C)

(1) Stated reference accuracy equations include terminal based linearity, hysteresis, and repeatability, but does not include analog only reference accuracy of ±0.005% of span.
(2) Specifications for process temperature are for the transmitter portion only. The transmitter is compatible with any Pt 100 (100 ohm platinum) RTD. Examples of compatible RTDs include Rosemount Series 68 and 78 RTD Temperature Sensors.
(3) RDG refers to transmitter DP reading.
(4) Ultra for Flow is only available for 3051SMV DP Ranges 2-3. For calibrated spans from 1:1 to 2:1 of URL, add ±0.005% of span analog output error.

Total performance(1)

Models		Ultra(1)	Classic and Classic MV	Ultra for Flow(2)
3051SMV	DP Ranges 2-3	±0.1% of span; for ±50°F (28°C) temperature changes; 0-100% relative humidity, up to 740 psi (51 bar) line pressure (DP only), from 1:1 to 5:1 rangedown	±0.15% of span; for ±50°F (28°C) temperature changes; 0-100% relative humidity, up to 740 psi (51 bar) line pressure (DP only), from 1:1 to 5:1 rangedown	±0.1% of reading; for ±50°F (28°C) temperature changes; 0-100% relative humidity, up to 740 psi (51 bar) line pressure, over 8:1 DP turndown from URL

(1) Total performance is based on combined errors of reference accuracy, ambient temperature effect, and line pressure effect. Specifications apply only to differential pressure measurement.
(2) Ultra for Flow is only available for 3051SMV DP Ranges 2-3.

MultiVariable Flow performance[1]

Mass, Energy, Actual Volumetric, and Totalized Flow Reference Accuracy[2]

Models[1][2]		Ultra for Flow	Classic MV
3051SMV	DP Ranges 2-3	±0.65% of Flow Rate over a 14:1 flow range (200:1 DP range)	±0.70% of Flow Rate over 8:1 flow range (64:1 DP range)
	DP Range 1	N/A	±0.90% of Flow Rate over 8:1 flow range (64:1 DP range)

(1) Applies to the 3051SMV_M MultiVariable Type only. Flow performance specifications assume device is configured for full compensation of static pressure, process temperature, density, viscosity, gas expansion, discharge coefficient, and thermal correction variances over a specified operating range.
(2) Uncalibrated differential producer (0.2 < beta < 0.6 Orifice) installed per ASME MFC 3M or ISO 5167-1. Uncertainties for discharge coefficient, producer bore, tube diameter, and gas expansion factor as defined in ASME MFC 3M or ISO 5167-1. Reference accuracy does not include RTD sensor accuracy.

Long term stability

Models		Ultra and Ultra for Flow[1]	Classic and Classic MV
3051SMV	DP Ranges 2-5 AP & GP Ranges 3-4	±0.20% of URL for 10 years; for ±50 °F (28 °C) temperature changes, up to 1000 psi (68,9 bar) line pressure	±0.125% of URL for 5 years; for ±50 °F (28 °C) temperature changes, up to 1000 psi (68,9 bar) line pressure
Process Temperature RTD Interface[2]		The greater of ±0.185°F (0.103 °C) or 0.1% of reading per year (excludes RTD sensor stability).	

(1) Ultra is only available for 3051SMV_ _3, 4. Ultra for Flow is only available for 3051SMV DP Ranges 2-3.
(2) Specifications for process temperature are for the transmitter portion only. The transmitter is compatible with any Pt 100 (100 ohm platinum) RTD. Examples of compatible RTDs include Rosemount Series 68 and 78 RTD Temperature Sensors.

Warranty[1]

Models[1]	Ultra and Ultra for Flow	Classic and Classic MV
3051S Scalable Products	12-year limited warranty[2]	1-year limited warranty[3]

(1) Warranty details can be found in Emerson Process Management Terms & Conditions of Sale, Document 63445, Rev G (10/06).
(2) Rosemount Ultra and Ultra for Flow transmitters have a limited warranty of twelve (12) years from date of shipment. All other provisions of Emerson Process Management standard limited warranty remain the same.
(3) Goods are warranted for twelve (12) months from the date of initial installation or eighteen (18) months from the date of shipment by seller, whichever period expires first.

Dynamic PerformanceAmbient Temperature effect

	4 - 20 mA (HART®)(1)	Typical Transmitter Response Time
Total Response Time (Td + Tc)(2) 3051SMV_ _1: DP, SP, & T 3051SMV_ _2: DP & SP: DP Range 1: DP Range 2: DP Range 3: AP & GP: **3051SMV_ _3: DP & T** **3051SMV_ _4: DP:** **DP Ranges 2-5:** DP Range 1: DP Range 0:	 310 milliseconds 170 milliseconds 155 milliseconds 240 milliseconds 145 milliseconds 300 milliseconds 745 milliseconds	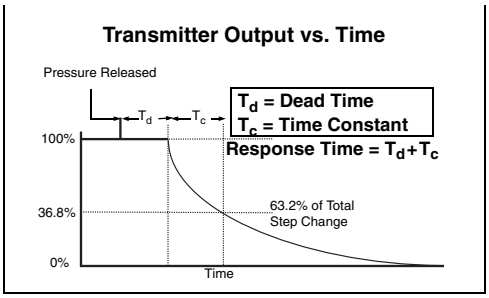
Dead Time (Td) DP: AP & GP: Process Temp. RTD Interface:	 100 milliseconds 140 milliseconds 1 second	
Update Rate Measured Variables: DP: AP & GP: Process Temp. RTD Interface: Calculated Variables: Mass or Volumetric Flow Rate: Energy Flow Rate: Totalized Flow:	 22 updates per second 11 updates per second 1 update per second 22 updates per second 22 updates per second 1 update per second	

(1) Dead time and update rate apply to all models and ranges; analog output only.
(2) Nominal total response time at 75 °F (24 °C) reference conditions.

Ambient Temperature effect

Models	Ultra per 50 °F (28 °C)	Classic or Classic MV per 50 °F (28 °C)	Ultra for Flow(1) -40 to 185 °F (-40 to 85 °C)
3051SMV_ _1: Differential Pressure, Static Pressure, & Temperature 3051SMV_ _2: Differential Pressure & Static Pressure			
DP Ranges 2 - 3	N/A	± (0.0125% URL + 0.0625% span) from 1:1 to 5:1; ± (0.025% URL + 0.125% span) for > 5:1	±0.13% reading up to 8:1 DP turndown from URL; ±[0.13 + 0.0187 (URL/RDG(4))]% reading to 100:1 DP turndown from URL
DP Range 1	N/A	± (0.1% URL + 0.25% Span) from 1:1 to 50:1	N/A
AP and GP	N/A	± (0.0125% URL + 0.0625% Span) from 1:1 to 10:1; ± (0.025% URL + 0.125% Span) for >10:1	± (0.009% URL + 0.025% Span) from 1:1 to 10:1; ± (0.018% URL + 0.08% Span) for >10:1

Models	Ultra per 50 °F (28 °C)	Classic or Classic MV per 50 °F (28 °C)	Ultra for Flow[2] -40 to 185 °F (-40 to 85 °C)
3051SMV_ _ 3: Differential Pressure & Temperature 3051SMV_ _ 4: Differential Pressure			
Range 2 - 5[3]	± (0.009% URL + 0.025% span) from 1:1 to 10:1; ± (0.018% URL + 0.08% span) from >10:1 to 200:1	± (0.0125% URL + 0.0625% span) from 1:1 to 5:1; ± (0.025% URL + 0.125% span) from >5:1 to 100:1	±0.13% reading up to 8:1 DP turndown from URL; ±[0.13 + 0.0187 (URL/RDG[4])] % reading to 100:1 DP turndown from URL
Range 0	± (0.25% URL + 0.05% span) from 1:1 to 30:1	± (0.25% URL + 0.05% span) from 1:1 to 30:1	N/A
Range 1	± (0.1% URL + 0.25% span) from 1:1 to 50:1	± (0.1% URL + 0.25% span) from 1:1 to 50:1	N/A
Process Temp. RTD Interface[5]	N/A	±0.39 °F (0,216 °C) per 50 °F (28 °C)	±0.39 °F (0,216 °C) per 50 °F (28 °C)

(1) Ultra for Flow is only available for 3051SMV DP Ranges 2-3.
(2) Ultra for Flow is only available for 3051SMV DP Ranges 2-3.
(3) Use Classic specification for 3051SMV DP Range 5 Ultra.
(4) RDG refers to transmitter reading.
(5) Specifications for process temperature are for the transmitter portion only. The transmitter is compatible with any Pt 100 (100 ohm platinum) RTD. Examples of compatible RTDs include Rosemount Series 68 and 78 RTD Temperature Sensors.

Line Pressure effect[1]

Models[1]	Ultra and Ultra for Flow	Classic and Classic MV
3051SMV: Differential Pressure Measurement Only		
Range 2-3 Range 0 Range 1	Zero Error[2] ± 0.025% URL per 1000 psi (69 bar) ± 0.125% URL per 100 psi (6,89 bar) ± 0.25% URL per 1000 psi (69 bar)	Zero Error[2] ± 0.05% URL per 1000 psi (69 bar) ± 0.125% URL per 100 psi (6,89 bar) ± 0.25% URL per 1000 psi (69 bar)
Range 2-3 Range 0 Range 1	Span Error[3] ± 0.1% of reading per 1000 psi (69 bar) ± 0.15% of reading per 100 psi (6,89 bar) ± 0.4% of reading per 1000 psi (69 bar)	Span Error[3] ± 0.1% of reading per 1000 psi (69 bar) ± 0.15% of reading per 100 psi (6,89 bar) ± 0.4% of reading per 1000 psi (69 bar)

(1) For zero error specifications for line pressures above 2000 psi (137,9 bar) or line pressure effect specifications for DP Ranges 4-5, see the 3051SMV Reference Manual (document number 00809-0100-4803).
(2) Zero error can be zeroed.
(3) Specifications for option code P0 are 2 times those shown above.

Mounting Position Effects

Models		Ultra, Ultra for Flow, Classic and Classic MV
3051SMV_ _ 1, 2	DP: AP/GP:	Zero shifts up to ±1.25 inH_2O (3,11 mbar), which can be zeroed; no span effect Zero shifts to ±2.5 inH_2O (6,22 mbar), which can be zeroed; no span effect
3051SMV_ _ 3, 4		Zero shifts up to ±1.25 inH_2O (3,11 mbar), which can be zeroed; no span effect

Vibration effect

Less than ±0.1% of URL when tested per the requirements of IEC60770-1 field or pipeline with high vibration level (10-60 Hz 0.21mm displacement peak amplitude / 60-2000 Hz 3g).

For Housing Style codes 1J, 1K, and 1L:
Less than ±0.1% of URL when tested per the requirements of IEC60770-1 field with general application or pipeline with low vibration level (10-60 Hz 0.15mm displacement peak amplitude / 60-500 Hz 2g).

Power supply effect

Less than ±0.005% of calibrated span per volt change in voltage at the transmitter terminals

Electromagnetic Compatibility (EMC)

Meets all relevant requirements of EN 61326 and NAMUR NE-21.(1)

Transient protection (Option T1)

Meets IEEE C62.41.2-2002, Location Category B

6 kV crest (0.5 μs - 100 kHz)

3 kA crest (8 × 20 microseconds)

6 kV crest (1.2 × 50 microseconds)

Meets IEEE C37.90.1-2002 Surge Withstand Capability

SWC 2.5 kV crest, 1.0 MHz wave form

(1) Requires shielded cable for both temperature and loop wiring.

A.1.2 Functional specifications

Range and sensor limits

Range	3051SMV Differential Pressure Range and Sensor Limits			
	Minimum Span		Range Limits	
	Ultra and Ultra for Flow	Classic and Classic MV	Upper (URL)	Lower (LRL)(1)
0	0.1 inH_2O (0,25 mbar)	0.1 inH_2O (0,25 mbar)	3.0 inH_2O (7,5 mbar)	-3.0 inH_2O (-7,5 mbar)
1	0.5 inH_2O (1,24 mbar)	0.5 inH_2O (1,24 mbar)	25.0 inH_2O (62,3 mbar)	-25.0 inH_2O (-62,3 mbar)
2	1.3 inH_2O (3,11 mbar)	2.5 inH_2O (6,23 mbar)	250.0 inH_2O (0,62 bar)	-250.0 inH_2O (-0,62 bar)
3	5.0 inH_2O (12,4 mbar)	10.0 inH_2O (24,9 mbar)	1000.0 inH_2O (2,49 bar)	-1000.0 inH_2O (-2,49 bar)
4	1.5 psi (103,4 mbar)	3.0 psi (206,8 mbar)	300.0 psi (20,7 bar)	-300.0 psi (-20,7 bar)
5	10.0 psi (689,5 mbar)	20.0 psi (1,38 bar)	2000.0 psi (137,9 bar)	- 2000.0 psi (-137,9 bar)

(1) Lower (LRL) is 0 inH_2O (0 mbar) for Ultra for Flow.

Range	3051SMV Static Pressure Range and Sensor Limits				
	Minimum Span		Range Limits		
	Ultra for Flow	Classic MV	Upper (URL)	Lower (LRL) (Absolute)	Lower (LRL) (Gage)(1)(2)
3	4.0 psi (276 mbar)	8.0 psi (552 mbar)	800 psi (55,16 bar)	0.5 psia (34,5 mbar)	-14.2 psig (-0,98 bar)
4	18.13 psi (1,25 bar)	36.26 psi (2,50 bar)	3626 psi (250.0 bar)(3)	0.5 psia (34,5 mbar)	-14.2 psig (-0,98 bar)

(1) Assumes atmospheric pressure of 14.7 psig (1 bar).
(2) Inert Fill: Minimum pressure = 1.5 psia (0,10 bar) or -13.2 psig (-0,91 bar).
(3) For SP Range 4 and DP Range 1, the URL is 2000 psi (137,9 bar).

Process Temperature RTD Interface Range Limits(1)		
Minimum Span	Upper (URL)	Lower (LRL)
50 °F (28 °C)	1562 °F (850 °C)	-328 °F (-200 °C)

(1) Designed to accommodate a Pt 100 RTD sensor. Examples of compatible RTDs include Rosemount Series 68 and 78 RTD Temperature Sensors.

Service

3051SMV_P (Direct Process Variable output):

Liquid, gas, and vapor applications

3051SMV_M (Mass and Energy Flow output):

Some fluid types are only supported by certain measurement types

Fluid Compatibility with Pressure and Temperature Compensation • Available — Not available

Ordering Code	Measurement Type	Fluid Types			
		Liquids	Saturated Steam	Superheated Steam	Gas and Natural Gas
1	DP / P/ T (Full Compensation)	•	•	•	•
2	DP / P	•	•	•	•
3	DP / T	•	•	—	—
4	DP only	•	•	—	—

4–20 mA/HART

Zero and span adjustment

Zero and span values can be set anywhere within the range.
Span must be greater than or equal to the minimum span.

Output

Two-wire 4–20 mA is user-selectable for linear or square root output. Digital process variable superimposed on 4–20 mA signal, available to any host that conforms to the HART protocol.

Power supply

External power supply required.
3051SMV transmitter: 12 to 42.4 Vdc with no load

Load limitations

Maximum loop resistance is determined by the voltage level of the external power supply, as described by:

3051SMV Transmitter

Maximum Loop Resistance = 43.5 * (Power Supply Voltage – 12.0)

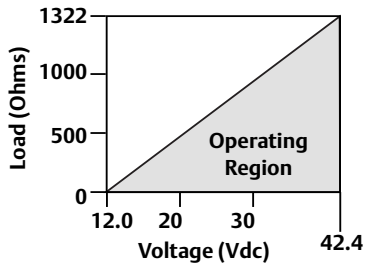

The Field communicator requires a minimum loop resistance of 250Ω for communication.

Overpressure limits

Transmitters withstand the following limits without damage:

3051SMV_ _1: Differential & Static Pressure, Temperature
3051SMV_ _2: Differential Pressure & Static Pressure

Static Pressure	Differential Pressure		
	Range 1	Range 2	Range 3
Range 3 GP/AP	1600 psi (110,3 bar)	1600 psi (110,3 bar)	1600 psi (110,3 bar)
Range 4 GP/AP	2000 psi (137,9 bar)	3626 psi (250 bar)	3626 psi (250 bar)

3051SMV_ _ 3: Differential Pressure & Temperature
3051SMV_ _ 4: Differential Pressure

Range 0: 750 psi (51,7 bar)
Range 1: 2000 psig (137,9 bar)
Ranges 2–5: 3626 psig (250,0 bar)
4500 psig (310,3 bar) for option code P9
6092 psig (420 bar) for option code P0 (Classic only)

Static Pressure limit

3051SMV_ _1: Differential & Static Pressure, Temperature
3051SMV_ _2: Differential Pressure & Static Pressure

Operates within 0.5 psia (0,03 bar) and the values in the table below:

Static Pressure	Differential Pressure		
	Range 1	Range 2	Range 3
Range 3 GP/AP	800 psi (57,91 bar)	800 psi (57,91 bar)	800 psi (57,91 bar)
Range 4 GP/AP	2000 psi (137,9 bar)	3626 psi (250 bar)	3626 psi (250 bar)

3051SMV_ _ 3: Differential Pressure & Temperature
3051SMV_ _ 4: Differential Pressure

Operates within specifications between static line pressures of 0.5 psia and 3626 psig;
4500 psig (310,3 bar) for option code P9
6092 psig (420 bar) for option code P0 (Classic only)
Range 0: 0.5 psia to 750 psig (0,03 to 51,71 bar)
Range 1: 0.5 psia to 2000 psig (0,03 to 137,9 bar)

Burst Pressure limits

3051SMV with Coplanar or Traditional Process Flange

10000 psig (689,5 bar)

Temperature limits

Ambient

-40 to 185 °F (-40 to 85 °C)
With LCD display [1]: -40 to 175 °F (-40 to 80 °C)
With option code P0: -20 to 185 °F (-29 to 85 °C)

Storage

-50 to 185 °F (-46 to 85 °C)
With LCD display: -40 to 185 °F (-40 to 85 °C)
With Wireless Output: -40 to 185 °F (-40 to 85 °C)

Process Temperature limits

At atmospheric pressures and above:

Silicone Fill Sensor[1][2]	
with Coplanar Flange	-40 to 250 °F (-40 to 121 °C)[3]
with Traditional Flange	-40 to 300 °F (-40 to 149 °C)[3][4]
with Level Flange	-40 to 300 °F (-40 to 149 °C)[3]
with 305 Integral Manifold	-40 to 300 °F (-40 to 149 °C)[3][4]
Inert Fill Sensor[1][5]	-40 to 185 °F (-40 to 85 °C)[6]

(1) Process temperatures above 185 °F (85 °C) require derating the ambient limits by a 1.5:1 ratio. For example, for process temperature of 195 °F (91 °C), new ambient temperature limit is equal to 170 °F (77 °C). This can be determined as follows:
(195 °F - 185 °F) x 1.5 = 15 °F,
185 °F - 15 °F = 170 °F
(2) 212 °F (100 °C) is the upper process temperature limit for DP Range 0.
(3) 220 °F (104 °C) limit in vacuum service; 130 °F (54 °C) for pressures below 0.5 psia.
(4) -20 °F (-29 °C) is the lower process temperature limit with option code P0.
(5) 32 °F (0 °C) is the lower process temperature limit for DP Range 0.
(6) For 3051SMV_ _ 1, 2, 140 ° F (60 °C) limit in vacuum service.

Humidity limits

0–100% relative humidity

(1) CD display may not be readable and LCD updates will be slower at temperatures below -4 °F (-20 °C).

Turn-On time

Performance within specifications less than 5 seconds for 3051SMV (typical) after power is applied to the transmitter.

Volumetric displacement

Less than 0.005 in^3 (0,08 cm^3)

Damping

Analog output response to a step change is user-selectable from 0 to 60 seconds for one time constant. Each variable can be individually adjusted. This software damping is in addition to sensor module response time.

Failure mode alarm

If self-diagnostics detect a gross transmitter failure, the analog signal will be driven offscale to alert the user. Rosemount standard (default), NAMUR, and custom alarm levels are available (see Table A-1 below).

High or low alarm signal is software-selectable or hardware-selectable via the optional switch (option D1).

Table A-1. Alarm configuration

	High Alarm	Low Alarm
Default	≥ 21.75 mA	≤ 3.75 mA
NAMUR compliant(1)	≥ 22.5 mA	≤ 3.6 mA
Custom levels(2)	20.2 - 23.0 mA	3.6 - 3.8 mA

(1) Analog output levels are compliant with NAMUR recommendation NE 43, see option codes C4 or C5.
(2) Low alarm must be 0.1 mA less than low saturation and high alarm must be 0.1 mA greater than high saturation.

A.1.3 Physical specifications

Electrical connections

1/2–14 NPT, G1/2, and M20 × 1.5 (CM20) conduit. HART interface connections fixed to terminal block.

Process connections

1/4–18 NPT on 2 1/8-in. centers

1/2–14 NPT and RC 1/2 on 2-in.(50.8mm), 2 1/8-in. (54.0 mm), or 2 1/4-in. (57.2mm) centers (process adapters)

Process-wetted parts

Process isolating diaphragms

316L SST (UNS S31603)
Alloy C-276 (UNS N10276)
Alloy 400 (UNS N04400)
Tantalum (UNS R05440)
Gold-plated Alloy 400
Gold-plated 316L SST

Drain/vent vValves

316 SST, Alloy C-276, or Alloy 400/K-500 material
(Drain vent seat: Alloy 400, Drain vent stem: Alloy K-500)

Process flanges and adapters

Plated carbon steel
SST: CF-8M (Cast 316 SST) per ASTM A743
Cast C-276: CW-12MW per ASTM A494
Cast Alloy 400: M-30C per ASTM A494

Wetted O-rings

Glass-filled PTFE
(Graphite-filled PTFE with Isolating Diaphragm code 6)

Non-Wetted parts

Electronics housing

Low-copper aluminum alloy or SST: CF-3M (Cast 316L SST) or CF-8M (Cast 316 SST)

NEMA 4X, IP 66, IP 68 (66 ft (20 m) for 168 hours)

Coplanar sensor module housing

SST: CF-3M (Cast 316L SST)

Bolts

Plated carbon steel per ASTM A449, Type 1

Austenitic 316 SST per ASTM F593

ASTM A453, Class D, Grade 660 SST

ASTM A193, Grade B7M alloy steel

ASTM A193, Class 2, Grade B8M SST

Alloy K-500

Sensor module fill fluid

Silicone or inert halocarbon.

Paint

Polyurethane

Cover O-rings

Buna-N

Shipping weights for 3051S MultiVariable Transmitter

3051SMV with PlantWeb housing: 6.7 lb (3,1 kg)

Table A-2. Transmitter option weights

Option Code	Option	Add lb (kg)
1J, 1K, 1L	SST PlantWeb Housing	3.5 (1,6)
1A, 1B, 1C	Aluminum PlantWeb Housing	1.1 (0,5)
M5	LCD Display for Aluminum PlantWeb Housing(1) LCD Display for SST PlantWeb Housing(1)	0.8 (0,4) 1.6 (0,7)
B4	SST Mounting Bracket for Coplanar Flange	1.2 (0,5)
B1, B2, B3	Mounting Bracket for Traditional Flange	1.7 (0,8)
B7, B8, B9	Mounting Bracket for Traditional Flange with SST Bolts	1.7 (0,8)
BA, BC	SST Bracket for Traditional Flange	1.6 (0,7)
B4	SST Mounting Bracket for In-Line	1.3 (0,6)
F12, F22	SST Traditional Flange with SST Drain Vents(2)	3.2 (1,5)
F13, F23	Cast C-276 Traditional Flange with Alloy C-276 Drain Vents(2)	3.6 (1,6)
E12, E22	SST Coplanar Flange with SST Drain Vents(2)	1.9 (0,9)
F14, F24	Cast Alloy 400 Traditional Flange with Alloy 400/K-500 Drain Vents(2)	3.6 (1,6)
F15, F25	SST Traditional Flange with Alloy C-276 Drain Vents(2)	3.2 (1,5)
G21	Level Flange—3 in., 150	12.6 (5,7)
G22	Level Flange—3 in., 300	15.9 (7,2)
G11	Level Flange—2 in., 150	6.8 (3,1)
G12	Level Flange—2 in., 300	8.2 (3,7)
G31	DIN Level Flange, SST, DN 50, PN 40	7.8 (3,5)
G41	DIN Level Flange, SST, DN 80, PN 40	13.0 (5,9)

(1) Includes LCD display and display cover.
(2) Includes mounting bolts.

Item	Weight in lb. (kg)
Aluminum Standard Cover	0.4 (0,2)
SST Standard Cover	1.3 (0,6)
Aluminum Display Cover	0.7 (0,3)
SST Display Cover	1.5 (0,7)
LCD Display(1)	0.1 (0,04)
PlantWeb Terminal Block	0.2 (0,1)

(1) Display only.

A.2 Dimensional drawings

Dimensions are in inches (millimeters).
Process adapters (option D2) and Rosemount 305 integral manifolds must be ordered with the transmitter.

PlantWeb Housing with Coplanar SuperModule Platform and 305 Coplanar Integral Manifold

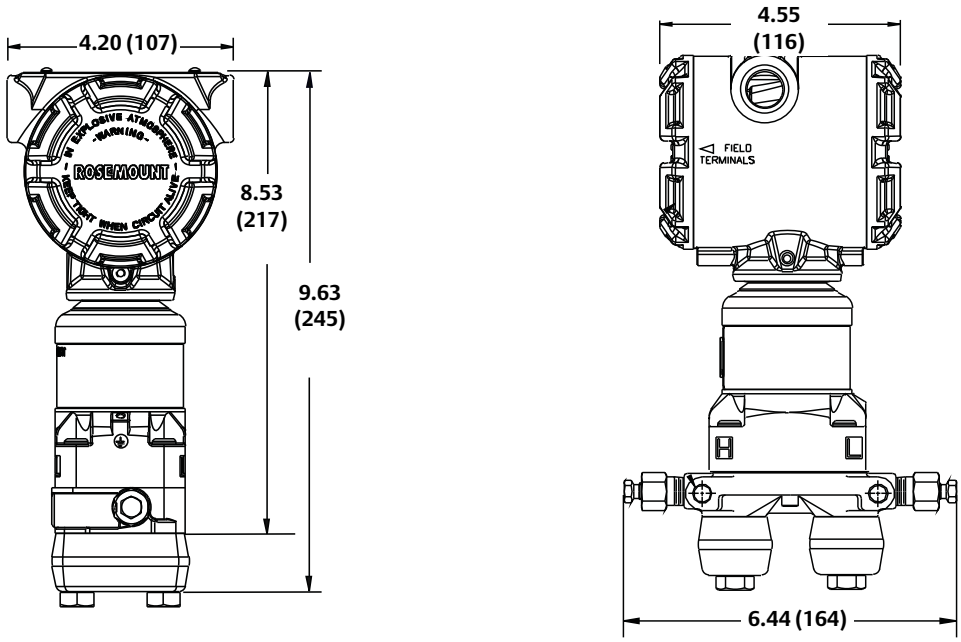

PlantWeb Housing with Coplanar SuperModule Platform and Coplanar Flange

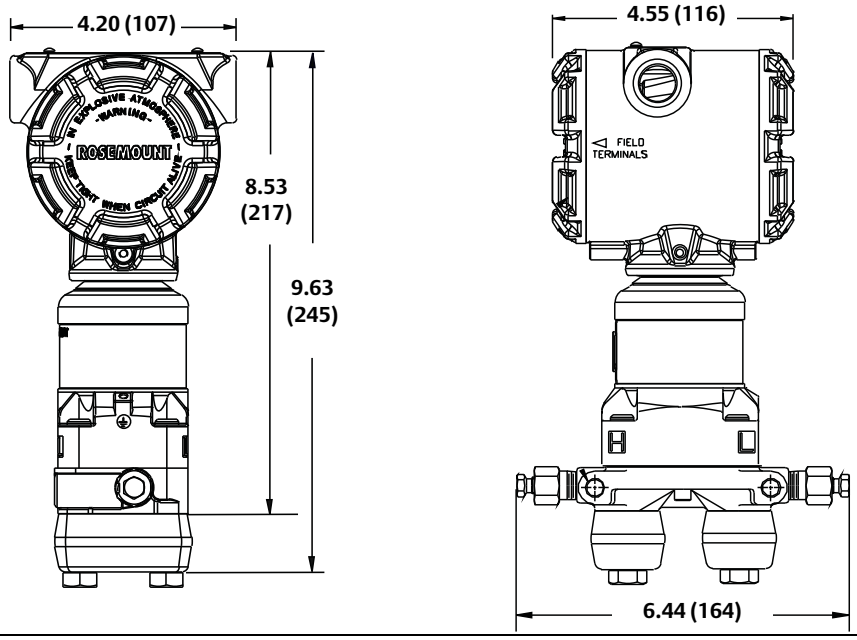

Coplanar Flange Mounting Configurations

Pipe Mount

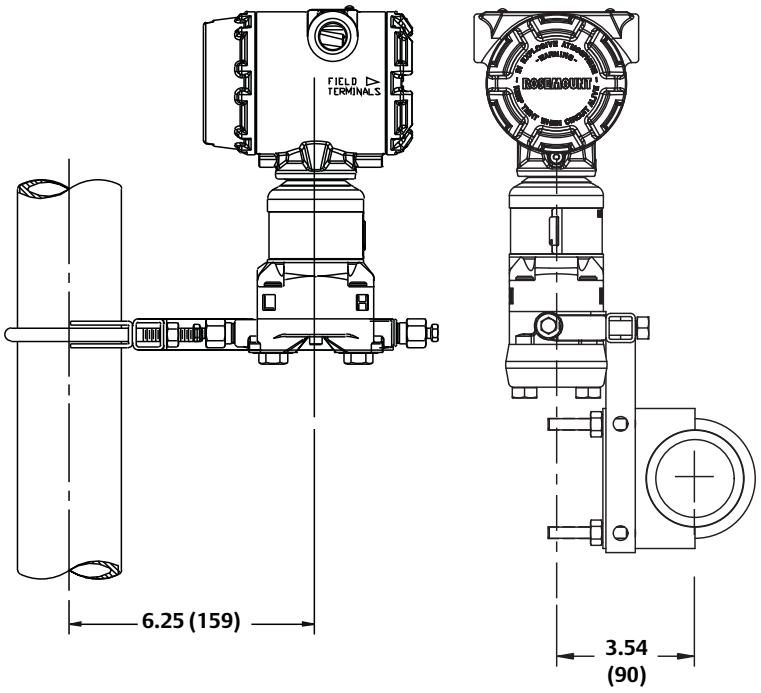

Panel Mount

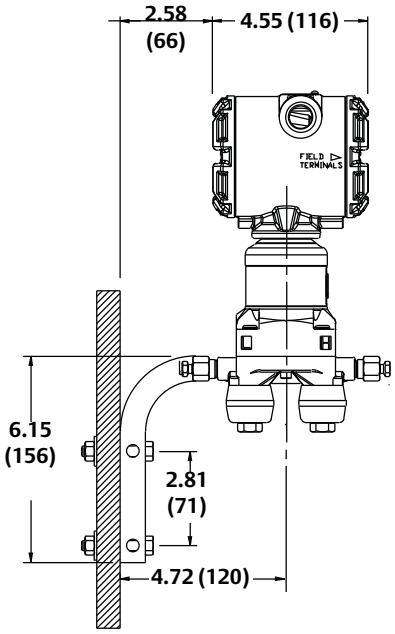

PlantWeb Housing with Coplanar SuperModule Platform and 305 Traditional Integral Manifold

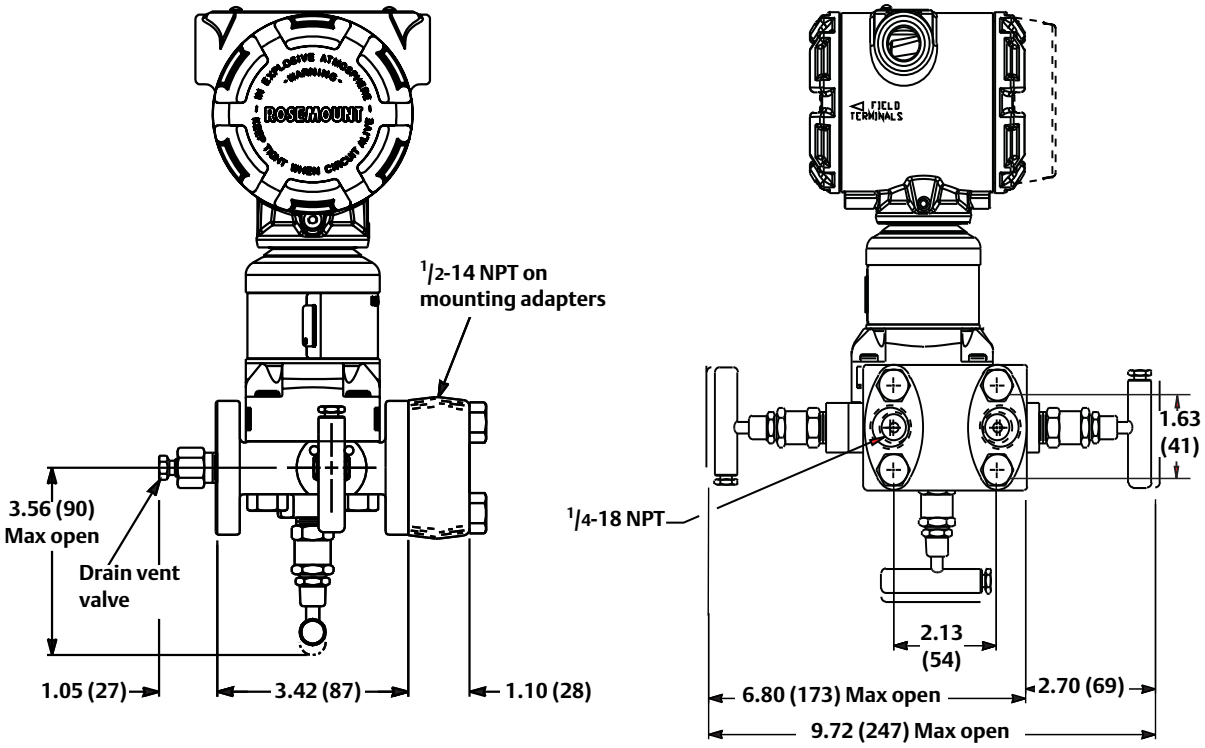

PlantWeb Housing with *Coplanar SuperModule* Platform and Traditional Flange

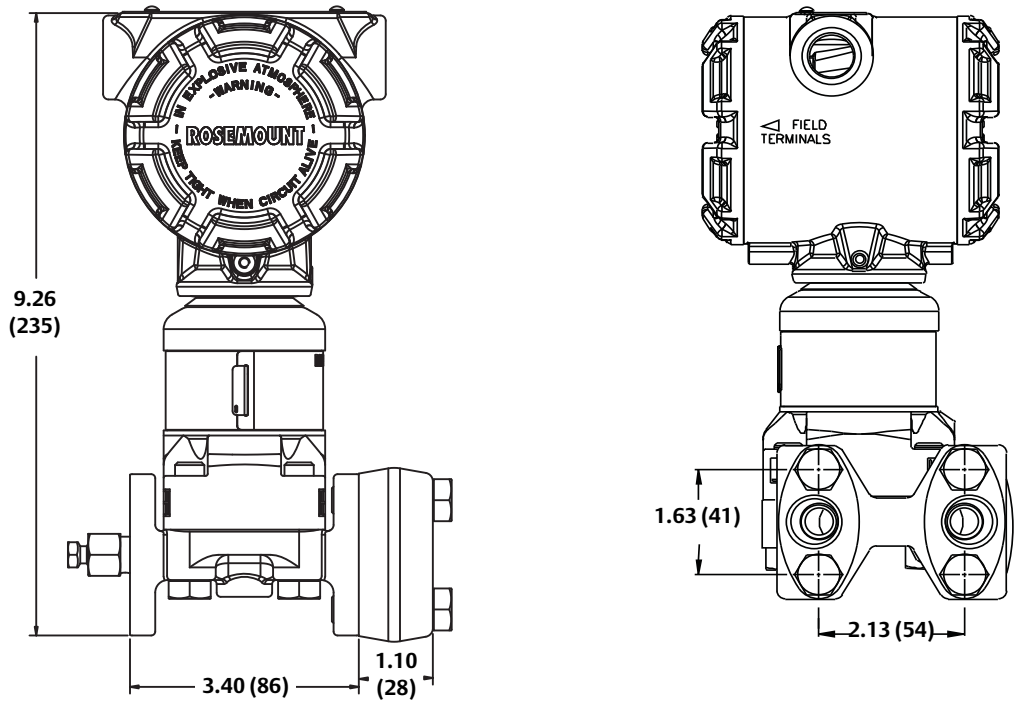

Traditional Flange Mounting Configurations

Pipe Mount 305 Integral Manifold

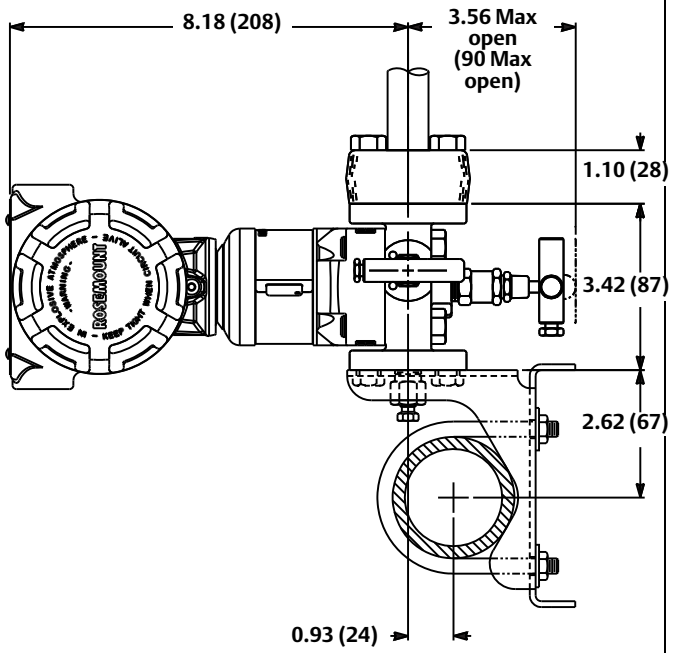

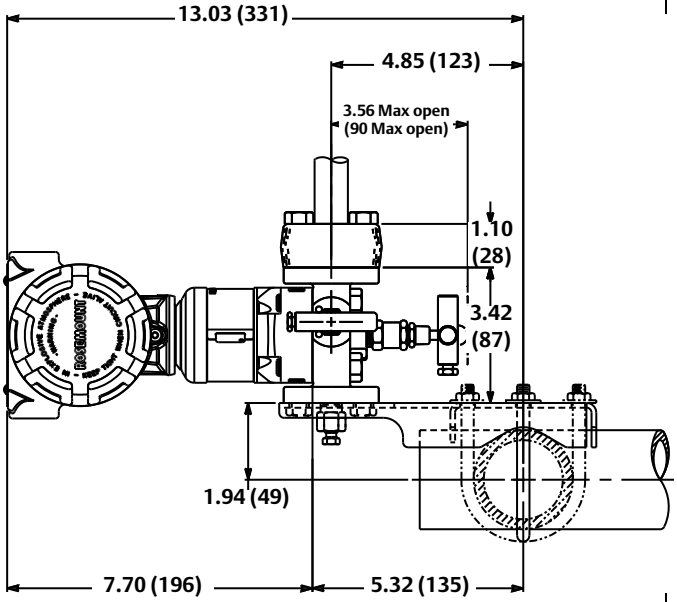

Panel Mount

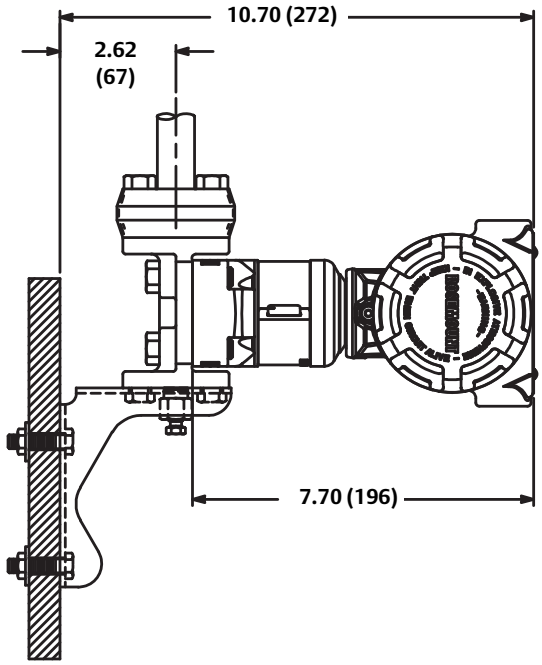

A.3 Ordering information

A.3.1 Rosemount 3051S MultiVariable transmitter

Table 1. Rosemount 3051S Scalable MultiVariable transmitter ordering information

★ The Standard offering represents the most common options. The starred options (★) should be selected for best delivery. The Expanded offering is subject to additional delivery lead time.

Model	Transmitter Type			
3051SMV	Scalable MultiVariable Transmitter			
Performance Class				
Standard				Standard
3051SMV MultiVariable SuperModule, Measurement Types 1 and 2				
3[1]	Ultra for Flow: 0.04% reading DP accuracy, 200:1 rangedown,10-year stability, 12-year limited warranty			★
5	Classic MV: 0.04% span DP accuracy, 100:1 rangedown, 5-year stability			★
3051SMV Single Variable SuperModule, Measurement Types 3 and 4				
1[2]	Ultra: 0.025% span DP accuracy, 200:1 rangedown, 10-year stability, 12-year limited warranty			★
2	Classic: 0.055% span DP accuracy, 100:1 rangedown, 5-year stability			★
3[1]	Ultra for Flow: 0.04% reading DP accuracy, 200:1 rangedown,10-year stability, 12-year limited warranty			★
MultiVariable Type				
Standard				Standard
M	MultiVariable Measurement with Fully Compensated Mass and Energy Flow			★
P	MultiVariable Measurement with Direct Process Variable Output			★
Measurement Type				
Standard				Standard
1	Differential Pressure, Static Pressure, and Temperature			★
2	Differential Pressure and Static Pressure			★
3	Differential Pressure and Temperature			★
4	Differential Pressure			★
Differential Pressure Range				
Standard				Standard
0[2][3]	-3 to 3 inH_2O (-7,47 to 7,47 mbar)			★
1	-25 to 25 inH_2O (-62,2 to 62,2 mbar)			★
2	-250 to 250 inH_2O (-623 to 623 mbar)			★
3	-1000 to 1000 inH_2O (-2,5 to 2,5 bar)			★
4	-300 to 300 psi (-20,7 to 20,7 bar)			★
5	-2000 to 2000 psi (-137,9 to 137,9 bar)			★
Static Pressure Type				
Standard				Standard
N[4]	None			★
A	Absolute			★
G	Gage			★
Static Pressure Range		**Absolute**	**Gage**	
Standard				Standard
N[4]	None			★
3	Range 3	0.5 to 800 psia (0,03 to 55,2 bar)	-14.2 to 800 psig (-0,98 to 55,2 bar)	★
4[5]	Range 4	0.5 to 3626 psia (0,03 to 250 bar)	-14.2 to 3626 psig (-0,98 to 250 bar)	★

Table 1. Rosemount 3051S Scalable MultiVariable transmitter ordering information

★ **The Standard offering represents the most common options. The starred options (★) should be selected for best delivery. The Expanded offering is subject to additional delivery lead time.**

Temperature Input						
Standard						Standard
N[6]	None					★
R[7]	RTD Input (Type Pt 100, -328 to 1562 °F (-200 to 850 °C))					★
Isolating Diaphragm						
Standard						Standard
2[8]	316L SST					★
3[8]	Alloy C-276					★
Expanded						
5[9]	Tantalum					
7	Gold-Plated 316L SST					
Process Connection		**Size**	**Material Type**			
			Flange Material	**Drain Vent**	**Bolting**	
Standard						Standard
000	None					★
A11[10]	Assemble to Rosemount 305/306 Integral Manifold					★
A12[10]	Assemble to Rosemount 304 or AMF Manifold with SST Traditional Flange					★
B11[10][11]	Assemble to one Rosemount 1199 Seal					★
B12[10][11]	Assemble to two Rosemount 1199 Seals					★
C11[10]	Assemble to Rosemount 405 Primary Element					★
D11[10]	Assemble to Rosemount 1195 Integral Orifice and Rosemount 305 Integral Manifold					★
EA2[10]	Assemble to Rosemount Annubar Primary Element with Coplanar flange		SST	316 SST		★
EA3[10]	Assemble to Rosemount Annubar Primary Element with Coplanar flange		Cast C-276	Alloy C-276		★
EA5[10]	Assemble to Rosemount Annubar Primary Element with Coplanar flange		SST	Alloy C-276		★
E11	Coplanar flange	1/4–18 NPT	Carbon Steel	316 SST		★
E12	Coplanar flange	1/4–18 NPT	SST	316 SST		★
E13[8]	Coplanar flange	1/4–18 NPT	Cast C-276	Alloy C-276		★
E14	Coplanar flange	1/4–18 NPT	Cast Alloy 400	Alloy 400/K-500		★
E15[8]	Coplanar flange	1/4–18 NPT	SST	Alloy C-276		★
E16[8]	Coplanar flange	1/4–18 NPT	Carbon Steel	Alloy *C-276*		★
E21	Coplanar flange	RC 1/4	Carbon Steel	316 SST		★
E22	Coplanar flange	RC 1/4	SST	316 SST		★
E23[8]	Coplanar flange	RC 1/4	Cast C-276	Alloy C-276		★
E24	Coplanar flange	RC 1/4	Cast Alloy 400	Alloy 400/K-500		★
E25[8]	Coplanar flange	RC 1/4	SST	Alloy C-276		★
E26[8]	Coplanar flange	RC 1/4	Carbon Steel	Alloy C-276		★
F12	Traditional flange	1/4–18 NPT	SST	316 SST		★
F13[8]	Traditional flange	1/4–18 NPT	Cast C-276	Alloy C-276		★
F14	Traditional flange	1/4–18 NPT	Cast Alloy 400	Alloy 400/K-500		★
F15[8]	Traditional flange	1/4–18 NPT	SST	Alloy C-276		★
F22	Traditional flange	RC 1/4	SST	316 SST		★
F23[8]	Traditional flange	RC 1/4	Cast C-276	Alloy C-276		★
F24	Traditional flange	RC 1/4	Cast Alloy 400	Alloy 400/K-500		★

Table 1. Rosemount 3051S Scalable MultiVariable transmitter ordering information

★ The Standard offering represents the most common options. The starred options (★) should be selected for best delivery. The Expanded offering is subject to additional delivery lead time.

Process Connection		Size	Material Type			
			Flange Material	Drain Vent	Bolting	
F25[8]	Traditional flange	RC 1/4	SST	Alloy C-276		★
F52	DIN-compliant traditional flange	1/4–18 NPT	SST	316 SST	7/16-in. bolting	★
G11	Vertical mount level flange	2-in. ANSI class 150	SST			★
G12	Vertical mount level flange	2-in. ANSI class 300	SST			★
G14[8]	Vertical mount level flange	2-in. ANSI class 150	Cast C-276			★
G15[8]	Vertical mount level flange	2-in. ANSI class 300	Cast C-276			★
G21	Vertical mount level flange	3-in. ANSI class 150	SST			★
G22	Vertical mount level flange	3-in. ANSI class 300	SST			★
G31	Vertical mount level flange	DIN- DN 50 PN 40	SST			★
Expanded						
EB6	Assemble to Primary Element with Manifold and Coplanar Flange, CS, Alloy C-276					
F32	Bottom vent traditional flange	1/4–18 NPT	SST	316 SST		
F42	Bottom vent traditional flange	RC 1/4	SST	316 SST		
F62	DIN-compliant traditional flange	1/4–18 NPT	SST	316 SST	M10 bolting	
F72	DIN-compliant traditional flange	1/4–18 NPT	SST	316 SST	M12 bolting	
G41	Vertical mount level flange	DIN- DN 80 PN 40	SST			
Transmitter Output						
Standard						Standard
A	4–20 mA with digital signal based on HART protocol					★
Housing Style			**Material**	**Conduit Entry Size**		
Standard						Standard
1A	PlantWeb housing		Aluminum	1/2–14 NPT		★
1B	PlantWeb housing		Aluminum	M20 x 1.5		★
1J	PlantWeb housing		SST	1/2–14 NPT		★
1K	PlantWeb housing		SST	M20 x 1.5		★
Expanded						
1C	PlantWeb housing		Aluminum	G1/2		
1L	PlantWeb housing		SST	G1/2		

Table 1. Rosemount 3051S Scalable MultiVariable transmitter ordering information

★ The Standard offering represents the most common options. The starred options (★) should be selected for best delivery. The Expanded offering is subject to additional delivery lead time.

Options (Include with selected model number)

RTD Cable (RTD Sensor must be ordered separately)		
Standard		Standard
C12	RTD Input with 12 ft. (3.66 m) of Shielded Cable	★
C13	RTD Input with 24 ft. (7.32 m) of Shielded Cable	★
C14	RTD Input with 75 ft. (22.86 m) of Shielded Cable	★
C20[12]	RTD Input with 27 in. (69 cm) of Armored Shielded Cable	★
C21	RTD Input with 4 ft. (1.22 m) of Armored Shielded Cable	★
C22	RTD Input with 12 ft. (3.66 m) of Armored Shielded Cable	★
C23	RTD Input with 24 ft. (7.32 m) of Armored Shielded Cable	★
C24	RTD Input with 75 ft. (22.86 m) of Armored Shielded Cable	★
C30[12]	RTD Input with 25 in. (64 cm) of ATEX/IECEx Flameproof Cable	★
C32	RTD Input with 12 ft. (3.66 m) of ATEX/IECEx Flameproof Cable	★
C33	RTD Input with 24 ft. (7.32 m) of ATEX/IECEx Flameproof Cable	★
C34	RTD Input with 75 ft. (22.86 m) of ATEX/IECEx Flameproof Cable	★
C40[12]	RTD Input with 34 in. (86.36 cm) Shielded Cable and 24 in. (60.96 cm) FM Approved Coupling Flex	★
C41[12]	RTD Input with 40 in. (101.60 cm) Shielded Cable and 30 in. (76.20 cm) FM Approved Coupling Flex	★
Mounting Brackets[13]		
Standard		Standard
B4	Coplanar flange bracket, all SST, 2-in. pipe and panel	★
B1	Traditional flange bracket, Carbon Steel, 2-in. pipe	★
B2	Traditional flange bracket, Carbon Steel, panel	★
B3	Traditional flange flat bracket, Carbon Steel, 2-in. pipe	★
B7	Traditional flange bracket, B1 with SST bolts	★
B8	Traditional flange bracket, B2 with SST bolts	★
B9	Traditional flange bracket, B3 with SST bolts	★
BA	Traditional flange bracket, B1, all SST	★
BC	Traditional flange bracket, B3, all SST	★
Software Configuration		
Standard		Standard
C1	Custom software configuration *Note: A Configuration Data Sheet must be completed, see document number 00806-0100-4803.*	★
C2	Custom flow configuration *Note: A Custom Fluid Data Sheet must be completed, see document number 00806-0200-4803.*	★
C4	NAMUR alarm and saturation levels, high alarm	★
C5	NAMUR alarm and saturation levels, low alarm	★
C6	Custom alarm and saturation signal levels, high alarm	★
C7	Custom alarm and saturation signal levels, low alarm	★
C8	Low alarm (standard Rosemount alarm and saturation levels)	★
Flange Adapter		
Standard		Standard
D2[13]	1/2-14 NPT flange adapter	★
Expanded		
D9[13]	RC 1/2 SST flange adapter	
Ground Screw		
Standard		Standard
D4	External ground screw assembly	★

Table 1. Rosemount 3051S Scalable MultiVariable transmitter ordering information

★ The Standard offering represents the most common options. The starred options (★) should be selected for best delivery. The Expanded offering is subject to additional delivery lead time.

Drain/Vent Valve		
Standard		Standard
D5[13]	Delete transmitter drain/vent valves (install plugs)	★
Expanded		
D7[13]	Coplanar flange without drain/vent ports	
Conduit Plug		
Standard		Standard
DO[14]	316 SST Conduit Plug	★
Product Certifications		
Standard		Standard
E1	ATEX Flameproof	★
I1	ATEX Intrinsic Safety	★
N1	ATEX Type n	★
ND	ATEX Dust	★
K1	ATEX Flameproof, Intrinsic Safety, Type n, Dust (combination of E1, I1, N1, and ND)	★
E4	TIIS Flameproof	★
E5	FM Explosion-proof, Dust Ignition-proof	★
I5	FM Intrinsically Safe, Division 2	★
K5	FM Explosion-proof, Dust Ignition-proof, Intrinsically Safe, Division 2 (combination of E5 and I5)	★
E6[15]	CSA Explosion-proof, Dust Ignition-proof, Division 2	★
I6	CSA Intrinsically Safe	★
K6[15]	CSA Explosion-proof, Dust Ignition-proof, Intrinsically Safe, Division 2 (combination of E6 and I6)	★
E7	IECEx Flameproof, Dust Ignition-proof	★
I7	IECEx Intrinsic Safety	★
N7	IECEx Type n	★
K7	IECEx Flameproof, Dust Ignition-proof, Intrinsic Safety, and Type n (combination of E7, I7, and N7)	★
E2	INMETRO Flameproof	★
I2	INMETRO Intrinsic Safety	★
E3	China Flameproof	★
I3	China Intrinsic Safety	★
KA[15][16]	ATEX and CSA Explosion-proof, Intrinsically Safe, Division 2 (combination of E1, E6, I1, and I6)	★
KB[15][16]	FM and CSA Explosion-proof, Dust Ignition-proof, Intrinsically Safe, Division 2 (combination of E5, E6, I5, and I6)	★
KC	FM and ATEX Explosion-proof, Intrinsically Safe, Division 2 (combination of E5, E1, I5, and I1)	★
KD[15][16]	FM, CSA, and ATEX Explosion-proof, Intrinsically Safe (combination of E5, E6, E1, I5, I6, and I1)	★
DW[17]	NSF Drinking Water Certification	★
Alternate Materials of Construction		
Standard		Standard
L1	Inert sensor fill fluid (Differential and Gage sensors only) *Note: Silicone fill fluid is standard.*	★
L2	Graphite-filled PTFE O-ring	★
L4[13]	Austenitic 316 SST bolts	★
L5[8][13]	ASTM A193, Grade B7M bolts	★
L6[13]	Alloy K-500 bolts	★
L7[8][13]	ASTM A453, Class D, Grade 660 bolts	★
L8[13]	ASTM A193, Class 2, Grade B8M bolts	★

Table 1. Rosemount 3051S Scalable MultiVariable transmitter ordering information

★ The Standard offering represents the most common options. The starred options (★) should be selected for best delivery. The Expanded offering is subject to additional delivery lead time.

Digital Display		
Standard		Standard
M5	PlantWeb LCD Display	★
Special Procedures		
Standard		Standard
P1[18]	Hydrostatic testing with certificate	★
P9[2]	4500 psig (310 bar) static pressure limit	★
P0[2][19]	6092 psig (420 bar) static pressure limit	★
Expanded		
P2[13]	Cleaning for special services	
P3[13]	Cleaning for less than 1PPM chlorine/fluorine	
Special Certifications		
Standard		Standard
Q4	Calibration Certificate	★
QP	Calibration Certificate and Tamper Evident Seal	★
Q8	Material Traceability Certification per EN 10204 3.1B	★
Q16	Surface Finish Certification for Sanitary Remote Seals	★
QZ	Remote Seal System Performance Calculation Report	★
Transient Protection		
Standard		Standard
T1	Transient terminal block	★
Conduit Electrical Connector		
Standard		Standard
GE[20]	M12, 4-pin, Male Connector (eurofast®)	★
GM[20]	A size Mini, 4-pin, Male Connector (minifast®)	★
Cold Temperature		
Standard		Standard
BRR	-60 °F (-51 °C) Cold Temperature Start-up	★
Typical Model Number: 3051SMV 3 M 1 2 G 4 R 2 E12 A 1A B4 C2 M5		

(1) Only available with DP range codes 2 and 3, 316L SST or Alloy C-276 isolating diaphragm and silicone fill fluid.
(2) Only available with Measurement Type codes 3 and 4.
(3) DP Range 0 is only available with traditional flange, 316L SST diaphragm material, and Bolting option L4.
(4) Required for Measurement Type codes 3 and 4.
(5) For Measurement Type 1 and 2 with DP range 1, absolute limits are 0.5 to 2000 psi (0,03 to 137,9 bar) and gage limits are -14.2 to 2000 psig (-0,98 to 137,9 bar).
(6) Required for Measurement Type codes 2 and 4.
(7) Required for Measurement Type codes 1 and 3. RTD Sensor must be ordered separately.
(8) Materials of Construction comply with metallurgical requirements highlighted within NACE MR0175/ISO 15156 for sour oil field production environments. Environmental limits apply to certain materials. Consult latest standard for details. Selected materials also conform to NACE MR0103 for sour refining environments.
(9) Tantalum diaphragm material is only available for DP ranges 2-5.
(10) "Assemble to" items are specified separately and require a completed model number.
(11) Consult an Emerson Process Management representative for performance specifications.
(12) For use with Flowmeters with integral RTDs.
(13) Not available with process connection option code A11.
(14) Transmitter is shipped with 316 SST conduit plug (uninstalled) in place of standard carbon steel conduit plug.
(15) Not available with M20 or G ½ conduit entry size.
(16) RTD cable not available with this option.
(17) Requires 316L SST diaphragm material, glass-filled PTFE O-ring (standard), and Process Connection code E12 or F12.
(18) Not available with DP range 0.
(19) Requires 316L SST or Alloy C-276 diaphragm material, assemble to Rosemount 305 Integral Manifold or DIN-compliant traditional flange process connection, and bolting option L8. Limited to differential pressure ranges 2-5.
(20) Available with Intrinsically Safe approvals only. For FM Intrinsically Safe, Non-Incendive approval (option code I5), install in accordance with Rosemount drawing 03151-1009 to maintain outdoor rating (NEMA 4X and IP66).

A.3.2 Rosemount 300SMV Housing Kit

Table A-3. 300SMV Ordering Information

Model				
300SMV	Housing Kit for Rosemount 3051S MultiVariable Transmitter			
Code	**MultiVariable type**			
Standard				**Standard**
M	MultiVariable Measurement with Fully Compensated Mass and Energy Flow			★
P	MultiVariable Measurement with Direct Process Variable Output			★
Code	**Temperature input**			
Standard				**Standard**
N	None			★
R[1]	RTD Input (Type Pt 100, -328 to 1562 °F (-200 to 850 °C))			★
Code	**Transmitter output**			
A	4–20 mA with digital signal based on HART protocol			★
Code	**Housing style**	**Material[2]**	**Conduit entry**	
Standard				**Standard**
1A	PlantWeb housing	Aluminum	1/2–14 NPT	★
1B	PlantWeb housing	Aluminum	M20 x 1.5 (CM20)	★
1J	PlantWeb housing	SST	1/2–14 NPT	★
1K	PlantWeb housing	SST	M20 x 1.5 (CM20)	★
Expanded				
1C	PlantWeb housing	Aluminum	G1/2	
1L	PlantWeb housing	SST	G 1/2	
Code	**Options**			
RTD cable (RTD sensor must be ordered separately)				
Standard				**Standard**
C12	RTD Input with 12 ft. (3.66 m) of Shielded Cable			★
C13	RTD Input with 24 ft. (7.32 m) of Shielded Cable			★
C14	RTD Input with 75 ft. (22.86 m) of Shielded Cable			★
C20[3]	RTD Input with 27 in. (69 cm) of Armored Shielded Cable			★
C21	RTD Input with 4 ft. (1.22 m) of Armored Shielded Cable			★
C22	RTD Input with 12 ft. (3.66 m) of Armored Shielded Cable			★
C23	RTD Input with 24 ft. (7.32 m) of Armored Shielded Cable			★
C24	RTD Input with 75 ft. (22.86 m) of Armored Shielded Cable			★
C30[3]	RTD Input with 25 in. (64 cm) of ATEX/IECEx Flameproof Cable			★
C32	RTD Input with 12 ft. (3.66 m) of ATEX/IECEx Flameproof Cable			★
C33	RTD Input with 24 ft. (7.32 m) of ATEX/IECEx Flameproof Cable			★
C34	RTD Input with 75 ft. (22.86 m) of ATEX/IECEx Flameproof Cable			★
C40[3]	RTD Input with 34 in. (86.36 cm) Shielded Cable and 24 in. (60.96 cm) FM Approved Coupling Flex			★
C41[3]	RTD Input with 40 in. (101.60 cm) Shielded Cable and 30 in. (76.20 cm) FM Approved Coupling Flex			★
Alarm limit				
Standard				**Standard**
C4	NAMUR alarm and saturation levels, high alarm			★
C5	NAMUR alarm and saturation levels, low alarm			★
C8	Low alarm (standard Rosemount alarm and saturation levels)			★

External ground screw assembly		
Standard		**Standard**
D4	External Ground Screw Assembly	★
Product certifications		
Standard		**Standard**
E1	ATEX Flameproof	★
I1	ATEX Intrinsic Safety	★
N1	ATEX Type n	★
ND	ATEX Dust	★
K1	ATEX Flameproof, Intrinsic Safety, Type n, Dust (combination of E1, I1, N1, and ND)	★
E4	TIIS Flameproof	★
I4	TIIS Intrinsic Safety	★
K4	TIIS Flameproof and Intrinsic Safety (combination E4 and I4)	★
E5	FM Explosion-proof, Dust Ignition-proof	★
I5	FM Intrinsically Safe, Division 2	★
K5	FM Explosion-proof, Dust Ignition-proof, Intrinsically Safe, Division 2 (combination of E5 and I5)	★
E6	CSA Explosion-proof, Dust Ignition-proof, Division 2	★
I6	CSA Intrinsically Safe	★
K6	CSA Explosion-proof, Dust Ignition-proof, Intrinsically Safe, Division 2 (combination of E6 and I6)	★
E7	IECEx Flameproof, Dust Ignition-proof	★
I7	IECEx Intrinsic Safety	★
N7	IECEx Type n	★
K7	IECEx Flameproof, Dust Ignition-proof, Intrinsic Safety, Type n (combination of E7, I7, and N7)	★
E2[4]	INMETRO Flameproof	★
I2[4]	INMETRO Intrinsic Safety	★
K2[4]	INMETRO Flameproof, Intrinsic Safety (combination of E2 and I2)	★
E3[4]	China Flameproof	★
I3[4]	China Intrinsic Safety	★
KA[5]	ATEX and CSA Explosion-proof, Intrinsically Safe, Division 2 (combination of E1, E6, I1, and I6)	★
KB	FM and CSA Explosion-proof, Dust Ignition-proof, Intrinsically Safe, Division 2 (combination of E5, E6, I5, and I6)	★
KC[5]	FM and ATEX Explosion-proof, Intrinsically Safe, Division 2 (combination of E5, E1, I5, and I1)	★
KD[5]	FM, CSA, and ATEX Explosion-proof, Intrinsically Safe (combination of E5, E6, E1, I5, I6, and I1)	★
Digital display		
Standard		**Standard**
M5	PlantWeb LCD Display	★
Terminal blocks		
Standard		**Standard**
T1	Transient terminal block	★
Conduit Electrical Connector		
GE[6]	M12, 4-pin, Male Connector (*eurofast*®)	★
GM[6]	A size Mini, 4-pin, Male Connector (*minifast*®)	★
Typical model number: 300SMV M R 1A C22 M5		

(1) RTD Sensor must be ordered separately.
(2) Material specified is cast as follows: CF-8M is the cast version of 316 SST, CF-3M is the cast version of 316L SST, CW-12MW is the cast version of Alloy C-276, M-30C is the cast version of Alloy 400. For housing, material is aluminum with polyurethane paint.
(3) For use with Flowmeters with integral RTDs.
(4) Contact an Emerson Process Management representative for availability.
(5) RTD cable not available with this option.
(6) Available with Intrinsically Safe approvals only. For FM Intrinsically Safe, Non-Incendive approval (option code I5), install in accordance with Rosemount drawing 03151-1206 to maintain outdoor rating (NEMA 4X and IP66).

A.4 Accessories

A.4.1 Rosemount Engineering Assistant (EA) sSoftware packages

The Rosemount Engineering Assistant software supports flow configuration for the 3051S MultiVariable. The package is available with or without modem and connecting cables. All configurations are packaged separately.

For best performance of the EA Software, the following computer hardware and software is recommended:

- Pentium-grade Processor: 500 MHz or faster
- Operating System: Windows 2000, XP Professional, or Windows 7
- 32-bit
- 64-bit
- 256 MB RAM
- 100 MB of available hard disk space
- RS232 serial port or USB port (for use with HART modem)
- CD-ROM

Engineering Assistant software packages

Code	Product description
EA	Engineering Assistant Software Program
Code	**Software media**
3	EA Rev. 6 (Compatible with 3051SMV only)
Code	**Language**
E	English
Code	**Modem and connecting cables**
O	None
H	Serial Port HART Modem and Cables
B	USB Port HART Modem and Cables
C	FOUNDATION fieldbus PCM-CIA Interface Card and Cables
Code	**License**
N1	Single PC license
N2	Site license
Typical model number: EA 2 E O N1	

Accessories

Item description	Part number
Serial Port HART Modem and Cables Only	03095-5105-0001
USB Port HART Modem and Cables Only(1)	03095-5105-0002

(1) Supported by Snap-On EA with AMS Device Manager version 6.2 or higher.

A.5 Exploded view diagram

The following drawing shows the name and location for commonly ordered spare parts.

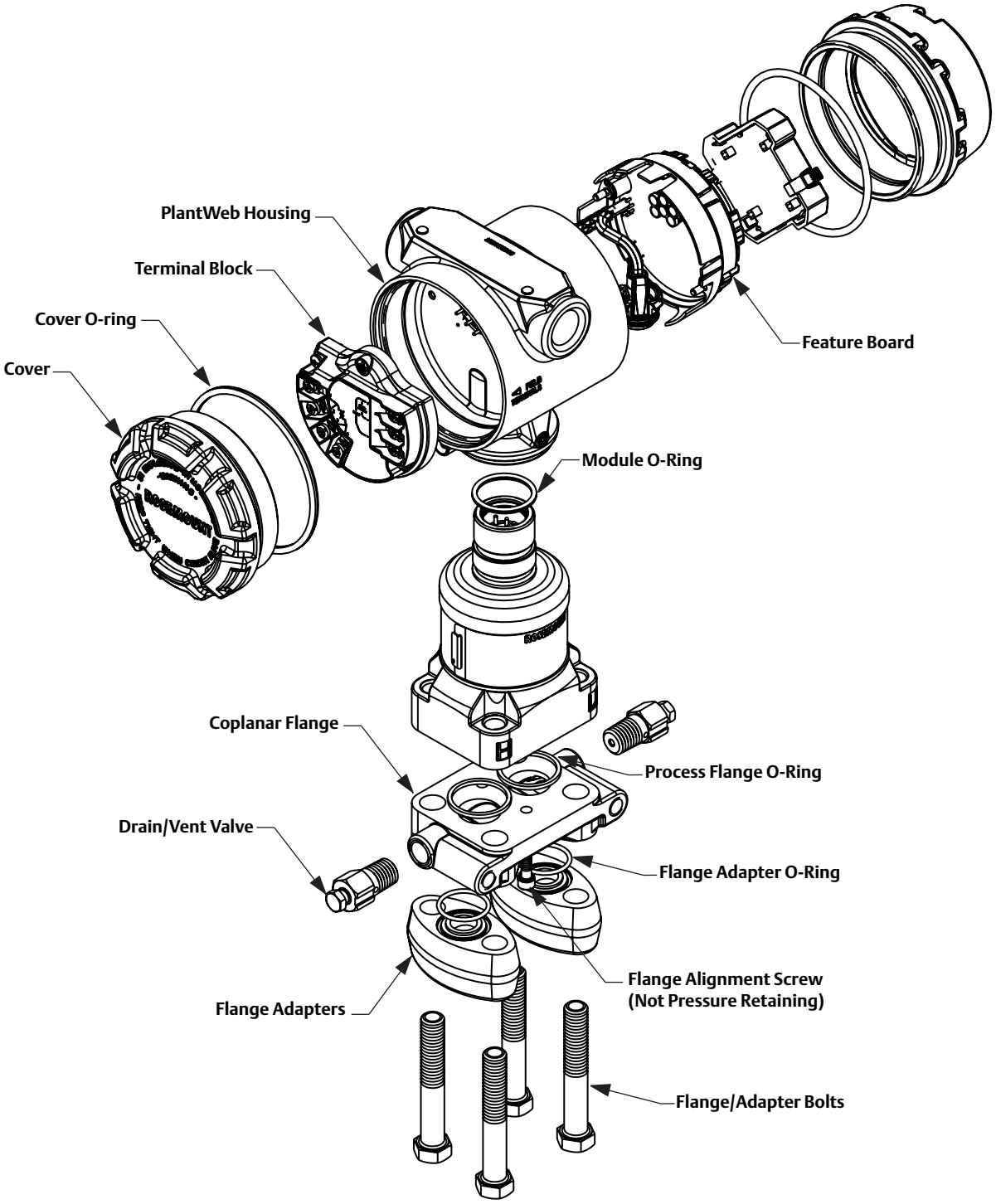

A.6 Spare Parts

Sensor Modules	
See Rosemount 3051S MultiVariable ordering table in Appendix A (page 27) for ordering spare sensor modules. Use housing style code 00 within the 3051S MultiVariable model number.	
- Typical Model Number: 3051SMV 3 M 1 2 G 3 R 2 E11 A 00 C21	
Feature Board Eletronics and Housing Assembly	
See Rosemount 300SMV Ordering Information on page 33 for ordering spare housings or feature boards.	
- Typical Model Number: 300SMV M R A 1A C21	
LCD Display	
Aluminum PlantWeb Housing	
LCD Display Kit: LCD assembly, 4-pin interconnection header and aluminum cover assembly	03151-9193-0001
LCD Display Only: LCD assembly, 4-pin interconnection header	03151-9193-0002
Cover Assembly Kit: aluminum cover assembly	03151-9193-0003
316L SST PlantWeb Housing	
LCD Display Kit: LCD assembly, 4-pin interconnection header, 316L SST cover assembly	03151-9193-0004
LCD Display Only: LCD assembly, 4-pin interconnection header	03151-9193-0002
Cover Assembly Kit: 316L SST cover assembly	03151-9193-0005
Electrical Housing, Terminal Blocks	
PlantWeb Housing Terminal Block, HART (4-20 mA)	
Standard Terminal Block Assembly with Temperature Input	03151-9006-0001
Standard Terminal Block Assembly without Temperature Input	03151-9005-0001
Transient Protection Terminal Block Assembly with Temperature Input	03151-9006-0002
Transient Protection Terminal Block Assembly without Temperature Input	03151-9005-0002
Covers	
Aluminum Electronics Cover; Cover and O-ring	03151-9030-0001
316L SST Electronics Cover; Cover and O-ring	03151-9030-0002
Housing Miscellaneous	
External Ground Screw Assembly (Option D4): Screw, clamp, washer	03151-9060-0001
Housing V-Seal for both PlantWeb and Junction Box housings	03151-9061-0001
PlantWeb housing header cable o-ring (package of 12)	03151-9011-0001

Flanges	Part Number
Differential Coplanar Flange	

Nickel-plated Carbon Steel	03151-9200-0025
SST	03151-9200-0022
Cast C-276	03151-9200-0023
Cast Alloy 400	03151-9200-0024
Gage/Absolute Coplanar Flange	
Nickel-plated Carbon Steel	03151-9200-1025
SST	03151-9200-1022
Cast C-276	03151-9200-1023
Cast Alloy 400	03151-9200-1024
Coplanar Flange Alignment Screw (package of 12)	03151-9202-0001
Traditional Flange	
SST	03151-9203-0002
Cast C-276	03151-9203-0003
Cast Alloy 400	03151-9203-0004
Flange Adapter Kits **(Each kit contains adapters, bolts, and o-ring for one DP transmitter or two GP/AP transmitters.)**	
CS Bolts, Glass Filled PTFE O-Rings	
SST Adapters	03031-1300-0002
Cast C-276 Adapters	03031-1300-0003
Cast Alloy 400 Adapters	03031-1300-0004
Ni Plated CS Adapters	03031-1300-0005
SST Bolts, Glass Filled PTFE O-Rings	
SST Adapters	03031-1300-0012
Cast C-276 Adapters	03031-1300-0013
Cast Alloy 400 Adapters	03031-1300-0014
Ni Plated CS Adapters	03031-1300-0015
CS Bolts, Graphite PTFE O-Rings	
SST Adapters	03031-1300-0102
Cast C-276 Adapters	03031-1300-0103
Cast Alloy 400 Adapters	03031-1300-0104
Ni Plated CS Adapters	03031-1300-0105

SST Bolts, Graphite PTFE O-Rings	
SST Adapters	03031-1300-0112
Cast C-276 Adapters	03031-1300-0113
Cast Alloy 400 Adapters	03031-1300-0114

Ni Plated CS Adapters	03031-1300-0115
Flange Adapter	**Part Number**
Nickel-plated Carbon Steel	03151-9259-0005
SST	03151-9259-0002
Cast C-276	03151-9259-0003
Cast Alloy 400	03151-9259-0004
Drain/Vent Valve Kits (each kit contains parts for one transmitter)	**Part Number**
Differential Drain/Vent Kits	
SST Valve Stem and Seat Kit	03151-9268-0022
Alloy C-276 Valve Stem and Seat Kit	03151-9268-0023
Alloy K-500 Valve Stem and Alloy 400 Seat Kit	03151-9268-0024
SST Ceramic Ball Drain/Vent Kit	03151-9268-0122
Alloy C-276 Ceramic Ball Drain/Vent Kit	03151-9268-0123
Alloy 400/K-500 Ceramic Ball Drain/Vent Kit	03151-9268-0124
Gage/Absolute Drain/Vent Kits	
SST Valve Stem and Seat Kit	03151-9268-0012
Alloy C-276 Valve Stem and Seat Kit	03151-9268-0013
Alloy K-500 Valve Stem and Alloy 400 Seat Kit	03151-9268-0014
SST Ceramic Ball Drain/Vent Kit	03151-9268-0112
Alloy C-276 Ceramic Ball Drain/Vent Kit	03151-9268-0113
Alloy 400 Ceramic Ball Drain/Vent Kit	03151-9268-0114
O-Ring Packages (package of 12)	
Electronic Housing, Cover (Standard and LCD Display)	03151-9040-0001
Electronics Housing, Module	03151-9041-0001
Process Flange, Glass-filled PTFE	03151-9042-0001
Process Flange, Graphite-filled PTFE	03151-9042-0002
Flange Adapter, Glass-filled PTFE	03151-9043-0001
Flange Adapter, Graphite-filled PTFE	03151-9043-0002
Gland and Collar Kits	
Gland and Collar Kits	03151-9250-0001

Mounting Brackets	
Coplanar Flange Bracket Kit	
B4 Bracket, SST, 2-in. pipe mount, SST bolts	03151-9270-0001

Traditional Flange Bracket Kits	
B1 Bracket, 2-in. pipe mount, CS bolts	03151-9272-0001
B2 Bracket, panel mount, CS bolts	03151-9272-0002
B3 Flat Bracket for 2-in. pipe mount, CS bolts	03151-9272-0003
B7 (B1 style bracket with SST bolts)	03151-9272-0007
B8 (B2 style bracket with SST bolts)	03151-9272-0008
B9 (B3 style bracket with SST bolts)	03151-9272-0009
BA (SST B1 bracket with SST bolts)	03151-9272-0011
BC (SST B3 bracket with SST bolts)	03151-9272-0013
DIN Compliant Traditional Flange Bracket Kits – M10 threads (F62 process connection)	
B1 Bracket, 2-in. pipe mount, CS bolts	03151-9272-0101
B2 Bracket, panel mount, CS bolts	03151-9272-0101
B3 Flat Bracket for 2-in. pipe mount, CS bolts	03151-9272-0103
B7 (B1 style bracket with SST bolts)	03151-9272-0107
B8 (B2 style bracket with SST bolts)	03151-9272-0108
B9 (B3 style bracket with SST bolts)	03151-9272-0109
BA (SST B1 bracket with SST bolts)	03151-9272-0111
BC (SST B3 bracket with SST bolts)	03151-9272-0113
DIN Compliant Traditional Flange Bracket Kits – M12 threads (F72 process connection)	
B1 Bracket, 2-in. pipe mount, CS bolts	03151-9272-0201
B2 Bracket, panel mount, CS bolts	03151-9272-0202
B3 Flat Bracket for 2-in. pipe mount, CS bolts	03151-9272-0203
B7 (B1 style bracket with SST bolts)	03151-9272-0207
B8 (B2 style bracket with SST bolts)	03151-9272-0208
B9 (B3 style bracket with SST bolts)	03151-9272-0209
BA (SST B1 bracket with SST bolts)	03151-9272-0211
BC (SST B3 bracket with SST bolts)	03151-9272-0213

Bolt Kits	
COPLANAR FLANGE	
Flange Bolt Kit [44 mm (1.75 in.)]	
Carbon Steel (set of 4)	03151-9280-0001
316 SST (set of 4)	03151-9280-0002
ANSI/ASTM-A-193-B7M (set of 4)	03151-9280-0003
Alloy K-500 (set of 4)	03151-9280-0004

ASTM A 453, Class D Grade 660 (set of 4)	03151-9280-0005
ASTM A193, Grade B8M, Class 2 (set of 4)	03151-9280-0006
Flange/Adapter Bolt Kit {73 mm (2.88 in.)}	
Carbon Steel (set of 4)	03151-9281-0001
316 SST (set of 4)	03151-9281-0002
ANSI/ASTM-A-193-B7M (set of 4)	03151-9281-0003
Alloy K-500 (set of 4)	03151-9281-0004
ASTM A 453, Class D Grade 660 (set of 4)	03151-9281-0005
ASTM A193, Grade B8M, Class 2 (set of 4)	03151-9281-0006
Manifold/Flange Kit {57 mm (2.25 in.)}	
Carbon Steel (set of 4)	03151-9282-0001
316 SST (set of 4)	03151-9282-0002
ANSI/ASTM-A-193-B7M (set of 4)	03151-9282-0003
Alloy K-500 (set of 4)	03151-9282-0004
ASTM A 453, Class D, Grade 660 (set of 4)	03151-9282-0005
ASTM A193, Grade B8M, Class 2 (set of 4)	03151-9282-0006
TRADITIONAL FLANGE	
Differential Flange and Adapter Bolt Kit	
Carbon Steel (set of 8)	03151-9283-0001
316 SST (set of 8)	03151-9283-0002
ANSI/ASTM-A-193-B7M (set of 8)	03151-9283-0003
Alloy K-500 (set of 8)	03151-9283-0004
ASTM A 453, Class D, Grade 660 (set of 8)	03151-9283-0005
ASTM A193, Grade B8M, Class 2 (set of 8)	03151-9283-0006

Gage/Absolute Flange and Adapter Bolt Kit	
Carbon Steel (set of 6)	03151-9283-1001
316 SST (set of 6)	03151-9283-1002
ANSI/ASTM-A-193-B7M (set of 6)	03151-9283-1003
Alloy K-500 (set of 6)	03151-9283-1004
ASTM A 453, Class D, Grade 660 (set of 6)	03151-9283-1005
ASTM A193, Grade B8M, Class 2 (set of 6)	03151-9283-1006
Manifold/Traditional Flange Bolts	
Carbon Steel	Use bolts supplied with manifold
316 SST	Use bolts supplied with manifold

Appendix B Product Certifications

Approved manufacturing locations . . . . . page 9
Ordinary location certification for FM . . . . . page 9
European directive information . . . . . page 9
Hazardous Locations Certifications . . . . . page 10
Installation drawings . . . . . page 15
Factory Mutual (FM) . . . . . page 15
Canadian Standards Association (CSA) . . . . . page 20
GE / GM option NEMA 4X . . . . . page 25

This section contains hazardous location certifications for 3051S MultiVariable Transmitter.

B.1.1. Approved manufacturing locations

Rosemount Inc. — Chanhassen, Minnesota USA

Emerson Process Management GmbH & Co. — Wessling, Germany

Emerson Process Management Asia Pacific Private Limited — Singapore

Beijing Rosemount Far East Instrument Co., LTD — Beijing, China

B.2.1. Ordinary location certification for FM

As standard, the transmitter has been examined and tested to determine that the design meets basic electrical, mechanical, and fire protection requirements by FM, a nationally recognized testing laboratory (NRTL) as accredited by the Federal Occupational Safety and Health Administration (OSHA).

B.3.1 European directive information

The EC declaration of conformity for all applicable European directives for this product can be found at www.emersonprocess.com/rosemount. A hard copy may be obtained by contacting an Emerson Process Management representative.

ATEX Directive (94/9/EC)

Emerson Process Management complies with the ATEX Directive.

European Pressure Equipment Directive (PED) (97/23/EC)

Models with Differential Pressure Ranges = 2 to 5 inclusive with Static Pressure = Range 4 only. P9 and P0 options also.

All other Model 3051SMV Pressure Transmitters

— Sound Engineering Practice

Transmitter Attachments: Diaphragm Seal - Process Flange - Manifold — Sound Engineering Practice

Primary Elements, Flowmeter

— See appropriate Primary Element QIG

Electro Magnetic Compatibility (EMC) (2004/108/EEC)

EN 61326-1:2006 and EN 61326-2-3:2006

B.4.1 Hazardous Locations Certifications

North American certifications

FM approvals

E5 Explosion-proof for Class I, Division 1, Groups B, C, and D; dust-ignition proof for Class II and Class III, Division 1, Groups E, F, and G; hazardous locations; enclosure Type 4X, conduit seal not required.

I5 Intrinsically Safe for use in Class I, Division 1, Groups A, B, C, and D; Class II, Division 1, Groups E, F, and G; Class III, Division 1; Class I, Zone 0 AEx ia IIC when connected in accordance with Rosemount drawing 03151-1206; Non-incendive for Class I, Division 2, Groups A, B, C, and D Enclosure Type 4X
For entity parameters see control drawing 03151-1206.

Canadian Standards Association (CSA)

All CSA hazardous approved transmitters are certified per ANSI/ISA 12.27.01-2003.

E6 Explosion-proof for Class I, Division 1, Groups B, C, and D; Dust-Ignition-Proof for Class II and Class III, Division 1, Groups E, F, and G; suitable for Class I, Division 2, Groups A, B, C, and D, CSA Enclosure Type 4X; conduit seal not required.

I6 Intrinsically Safe for Class I, Division 1, Groups A, B, C, and D when connected in accordance with Rosemount drawings 03151-1207;
For entity parameters see control drawing 03151-1207.

European certifications

I1 ATEX Intrinsic Safety
Certificate No.: 08ATEX0064X Ⓔx II 1G
Ex ia IIC T4 (T_a = -60 °C to 70 °C) -HART
CE 1180

Table B-1. Input parameters

Loop / Power	Groups
U_i = 30 V	HART
I_i = 300 mA	HART
P_i = 1.0 W	HART
C_i = 14.8 nF	HART
L_i = 0	HART

Special conditions for safe use (x)

The apparatus is not capable of withstanding the 500 V test as defined in Clause 6.3.12 of EN 60079-11. This must be considered during installation.

N1 ATEX Type n
Certificate No.: Baseefa 08ATEX0065X Ⓔx II 3 G
Ex nA nL IIC T4 (T_a = -40 °C TO 70 °C)
U_i = 45 Vdc max
IP66
CE

Special conditions for safe use (x)

The apparatus is not capable of withstanding the 500 V insulation test required by Clause 6.8.1 of EN 60079-15. This must be taken into account when installing the apparatus.

ND ATEX Dust
Certificate No.: BAS01ATEX1303X Ⓔx II 1 D
T105°C (-20 °C ≤ T_{amb} ≤ 85 °C)
V_{max} = 42.4 volts max
A = 24 mA
IP66
CE 1180

Special conditions for safe use (x)

The user must ensure that the maximum rated voltage and current (42.4 volts, 22 milliampere, DC) are not exceeded. All connections to other apparatus or associated apparatus shall have control over this voltage and current equivalent to a category “ib” circuit according to EN 60079-11.

1. Cable entries must be used which maintain the ingress protection of the enclosure to at least IP66.
2. Unused cable entries must be filled with suitable blanking plugs which maintain the ingress protection of the enclosure to at least IP66.
3. Cable entries and blanking plugs must be suitable for the ambient range of the apparatus and capable of withstanding a 7J impact test.
4. The 3051SMV must be securely screwed in place to maintain the ingress protection of the enclosure.

E1 ATEX Flameproof
Certificate No.: KEMA 00ATEX2143X Ⓔx II 1/2 G
Ex d IIC T6 (-50 °C ≤ T_{amb} ≤ 65 °C)
Ex d IIC T5 (-50 °C ≤ T_{amb} ≤ 80 °C)
V_{max} = 42.4 V
CE 1180

Special conditions for safe use (x)

1. Appropriate ex d blanking plugs, cable glands, and wiring needs to be suitable for a temperature of 90 °C.
2. This device contains a thin wall diaphragm. Installation, maintenance, and use shall take into account the environmental conditions to which the diaphragm will be subjected. The manufacturer’s instructions for maintenance shall be followed in detail to assure safety during its expected lifetime.
3. The 3051SMV does not comply with the requirements of EN 60079-1 Clause 5.2, Table 2 for all joints. Contact Emerson Process Management for information on the dimensions of flameproof joints.

Japanese certifications

E4 TIIS Flameproof
Consult factory for availability

I4 TIIS Intrinsically Safe
Consult factory for availability

INMETRO certifications

E2 INMETRO Flameproof
Certificate No.: NCC 12.1128 X
Ex d IIC T6/T5 Ga/Gb
T6 (-50 °C ≤T_{amb} ≤ +65 °C)
T5 (-50 °C ≤ T_{amb} ≤ +80 °C)

Special conditions for safe use (x)

1. For processes with temperatures above 135 °C, the user must assess whether the temperature class of the SuperModule is appropriate because in these appliances there is a risk of the SuperModule temperature being above the T5 temperature class, considering that this temperature is one function of the ventilation type used on the equipment.
2. The Ex d blanking elements, cable glands and wiring shall be suitable for a temperature of 90 °C.
3. The 3051 transmitter contains a thin wall diaphragm. Installation, maintenance and use shall take into account the environmental conditions to which the diaphragm will be subjected. The manufacturer's instructions for maintenance shall be followed in detail to assure safety during its expected lifetime.
4. In case of repair, contact the manufacturer for information about the dimensions of the flameproof joints.

I2 INMETRO Intrinsic Safety
Certificate No: NCC 12.1158 X
Ex ia IIC T4 Ga
T4 (-60 °C ≤ T_{amb} ≤ +70 °C)

Field Connection / 4-20mA Loop	**RTD Connection**
U_i = 30 V	U_i = 30 V
I_i = 300 mA	I_i = 2.31 mA
P_i = 1.0 W	P_i = 17.32 W
C_i = 14.8 nF	C_i = 0
L_i = 0	L_i = 0

Special conditions for safe use (x)

1. If the equipment is fitted with the optional 90V transient suppressor, it is incapable of withstanding the 500V isolation from earth test and this must be taken into account during installation.
2. For processes with temperatures above 135°C, the user must assess whether the temperature class of the SuperModule is appropriate because in these appliances there is a risk of the SuperModule temperature being above the T5 temperature class, considering that this temperature is one function of the ventilation type used on the equipment.

China (NEPSI) certifications

E3 China Flameproof
Ex d II B+H_2T3~T5

I3 China Intrinsic Safety
Ex ia IIC T3/T4

IECEx certifications

I7 IECEx Intrinsic Safety
Certificate No.: IECExBAS08.0025X
Ex ia IIC T4 (T_a = -60 °C to 70 °C) -HART
IP66

Table B-2. Input parameters

Loop / Power	Groups
U_i = 30 V	HART
I_i = 300 mA	HART
P_i = 1.0 W	HART
C_i = 14.8 nF	HART
L_i = 0	HART

Special conditions for safe use (x)

The 3051SMV HART 4-20mA is not capable of withstanding the 500 V test as defined in clause 6.3.12 of IEC 60079-11. This must be taken into account during installation. installation.

N7 IECEx Type n
Certificate No.: IECExBAS08.0026X
Ex nAnL IIC T4 (T_a = -40 °C to 70 °C)
U_i = 45 Vdc MAX
IP66

Special conditions for safe use (x)

The apparatus is not capable of withstanding the 500 V insulation test required by Clause 6.8.1 of IEC 60079-15.

E7 IECEx Flameproof
Certificate No.: IECExKEM08.0010X
Ex d IIC T6 (-50 °C ≤ T_{amb} ≤ 65 °C)
Ex d IIC T5 (-50 °C ≤ T_{amb} ≤ 80 °C)
V_{max} = 42.4 V

Special conditions for safe use (x)

1. Appropriate ex d blanking plugs, cable glands, and wiring needs to be suitable for a temperature of 90 °C.
2. This device contains a thin wall diaphragm. Installation, maintenance, and use shall take into account the environmental conditions to which the diaphragm will be subjected. The manufacturer's instructions for maintenance shall be followed in detail to assure safety during its expected lifetime.
3. The 3051SMV does not comply with the requirements of IEC 60079-1 Clause 5.2, Table 2 for all joints. Contact Emerson Process Management for information on the dimensions of flameproof joints.

Combinations of certifications

Stainless steel certification tag is provided when optional approval is specified. Once a device labeled with multiple approval types is installed, it should not be reinstalled using any other approval types. Permanently mark the approval label to distinguish it from unused approval types.

K1 Combination of E1, I1, N1, and ND

K2 Combination of E2 and I2

K4 Combination of E4 and I4

K5 Combination of E5 and I5

K6 Combination of E6 and I6

K7 Combination of E7, I7, and N7

KA Combination of E1, E6, I1, and I6

KB Combination of E5, E6, I5, and I6

KC Combination of E5, E1, I5 and I1

KD Combination of E5, E6, E1, I5, I6, and I1

B.5 Installation drawings

B.5.1 Factory Mutual (FM)

CONFIDENTIAL AND PROPRIETARY INFORMATION IS CONTAINED HEREIN AND MUST BE HANDLED ACCORDINGLY	REVISIONS				
	REV	DESCRIPTION	CHG. NO.	APP'D	DATE
	AA	NEW RELEASE	RTC1025256	A.J.W.	1/2/08
	AB	UPDATE NOTES & ADD RTD TO DIAGRAMS	RTC1025712	A.J.W.	2/28/08

ENTITY APPROVALS FOR MODEL 3051SMV

OUTPUT CODE "A" (4-20 mA HART) I.S. SEE SHEETS 2-3
NONINCENDIVE SEE SHEET 4

THE ROSEMOUNT TRANSMITTERS LISTED ABOVE ARE F.M. APPROVED AS INTRINSICALLY SAFE WHEN USED IN CIRCUIT WITH F.M. APPROVED BARRIERS WHICH MEET THE ENTITY PARAMETERS LISTED IN THE CLASS I, II, AND III, DIVISION 1 GROUPS INDICATED.

TO ASSURE AN INTRINSICALLY SAFE SYSTEM, THE TRANSMITTER AND BARRIER MUST BE WIRED IN ACCORDANCE WITH THE BARRIER MANUFACTURER'S FIELD WIRING INSTRUCTIONS AND THE APPLICABLE CIRCUIT DIAGRAM.

CAD MAINTAINED (MicroStation)

UNLESS OTHERWISE SPECIFIED DIMENSIONS IN INCHES [mm]. REMOVE ALL BURRS AND SHARP EDGES. MACHINE SURFACE FINISH 125 -TOLERANCE- .X ± .1 [2,5] .XX ± .02 [0,5] .XXX ± .010 [0,25] FRACTIONS ± 1/32 ANGLES ± 2° DO NOT SCALE PRINT	CONTRACT NO. DR. Myles Lee Miller 12/17/07 CHK'D APP'D. APP'D. GOVT.	EMERSON. Process Management ROSEMOUNT® 8200 Market Boulevard • Chanhassen, MN 55317 USA TITLE: INDEX OF I.S. & NONINCENDIVE F.M. FOR 3051SMV SIZE A | FSCM NO | DWG NO. 03151-1206 SCALE N/A | WT. | SHEET 1 OF 5	

Form Rev AC

REVISIONS				
REV	DESCRIPTION	CHG. NO.	APP'D	DATE
AB				

ENTITY CONCEPT APPROVALS

THE ENTITY CONCEPT ALLOWS INTERCONNECTION OF INTRINSICALLY SAFE APPARATUS TO ASSOCIATED APPARATUS NOT SPECIFICALLY EXAMINED IN COMBINATION AS A SYSTEM. THE APPROVED VALUES OF MAX. OPEN CIRCUIT VOLTAGE (Voc, Uo OR Vt) AND MAX. SHORT CIRCUIT CURRENT (Isc, Io, OR It) AND MAX.POWER Po(Voc X Isc/4) OR (Vt X It/4), FOR THE ASSOCIATED APPARATUS MUST BE LESS THAN OR EQUAL TO THE MAXIMUM SAFE INPUT VOLTAGE (Vmax, OR U_i), MAXIMUM SAFE INPUT CURRENT (Imax OR I_i), AND MAXIMUM SAFE INPUT POWER (Pmax OR P_i) OF THE INTRINSICALLY SAFE APPARATUS. IN ADDITION, THE APPROVED MAX. ALLOWABLE CONNECTED CAPACITANCE (Ca) OF THE ASSOCIATED APPARATUS MUST BE GREATER THAN THE SUM OF THE INTERCONNECTING CABLE CAPACITANCE AND THE UNPROTECTED INTERNAL CAPACITANCE (C_i) OF THE INTRINSICALLY SAFE APPARATUS, AND THE APPROVED MAX. ALLOWABLE CONNECTED INDUCTANCE (La) OF THE ASSOCIATED APPARATUS MUST BE GREATER THAN THE SUM OF THE INTERCONNECTING CABLE INDUCTANCE AND THE UNPROTECTED INTERNAL INDUCTANCE (L_i) OF THE INTRINSICALLY SAFE APPARATUS.

NOTE: ENTITY PARAMETERS LISTED APPLY ONLY TO ASSOCIATED APPARATUS WITH LINEAR OUTPUT.

FOR OUTPUT CODE "A" MODEL 3051SMV — CLASS I, DIV. 1, GROUPS A, B, C AND D

U_i or V_{MAX} = 30V	Uo, V_T or V_{OC} IS LESS THAN OR EQUAL TO 30V
I_i or I_{MAX} = 300mA	Io, I_T or I_{SC} IS LESS THAN OR EQUAL TO 300mA
P_i or P_{MAX} = 1.0 WATT	$(\frac{V_T \times I_T}{4})$ or $(\frac{Voc \times Ios}{4})$ IS LESS THAN OR EQUAL TO 1.0 WATT
C_i = 14.8nF	C_A IS GREATER THAN 14.8nF
L_i = 0μH	L_A IS GREATER THAN 0μH
T4 (Ta=-50°C to +70°C)	

FOR RTD SENSOR PARAMETERS

Vt = 7.14V
It = 3.64mA
Po = 6.5mW
Ca = 13.5nF
La = 1 H

Rosemount Inc.
8200 Market Boulevard
Chanhassen, MN 55317 USA

CAD MAINTAINED (MicroStation)

DR. Myles Lee Miller	SIZE A	FSCM NO	DWG NO. 03151-1206
ISSUED	SCALE N/A	WT. ———	SHEET 2 OF 5

Form Rev AC

REVISIONS				
REV	DESCRIPTION	CHG. NO.	APP'D	DATE
AB				

CIRCUIT DIAGRAM 1
ONE BARRIER OR CONVERTER:
SINGLE OR DUAL CHANNEL

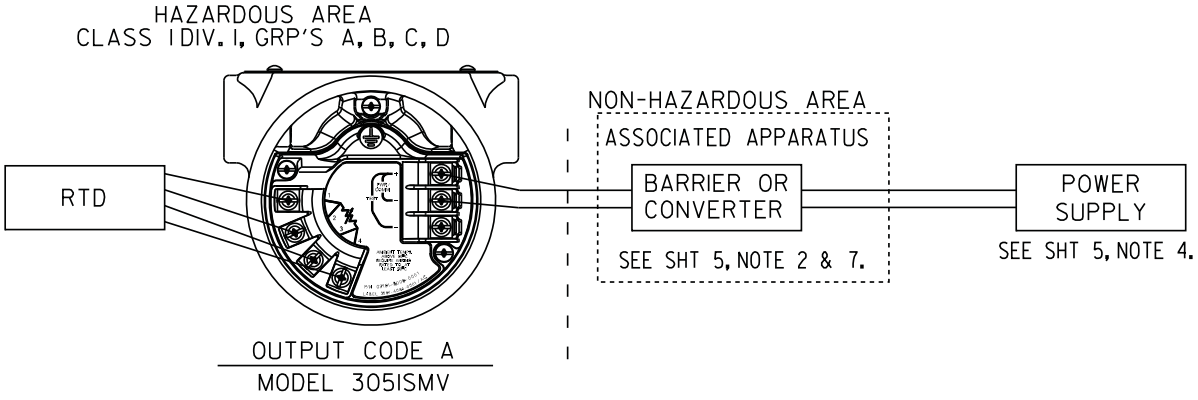

CIRCUIT DIAGRAM 2
SUPPLY AND RETURN BARRIERS
(ONLY FOR USE WITH BARRIERS APPROVED IN THIS CONFIGURATION)

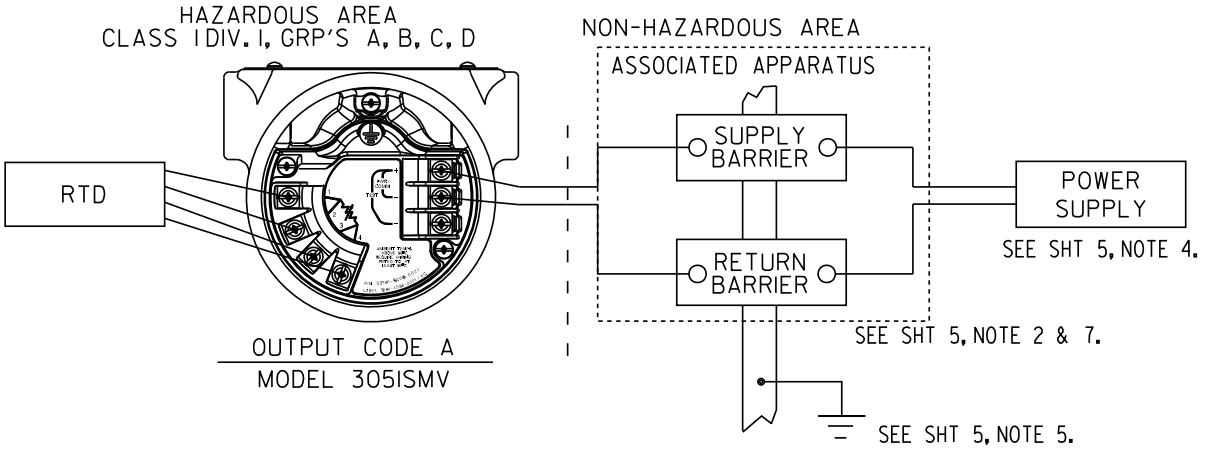

Rosemount Inc. 8200 Market Boulevard Chanhassen, MN 55317 USA			CAD MAINTAINED (MicroStation)
DR. Myles Lee Miller	SIZE A	FSCM NO	DWG NO. 03151-1206
ISSUED	SCALE N/A	WT. ———	SHEET 3 OF 5

Form Rev AC

REVISIONS				
REV	DESCRIPTION	CHG. NO.	APP'D	DATE
AB				

NONINCENDIVE FIELD CIRCUIT
CLASS I, DIV. 2 LOCATIONS

NON-CLASSIFIED LOCATION

HAZARDOUS (CLASSIFIED) LOCATION
CLASS I, DIV. 2, GRP'S A, B, C, D

$Vmax_1$ CI_1 LI_1 $Imax_1$ | $Vmax_2$ CI_2 LI_2 $Imax_2$ | $Vmax_3$ CI_3 LI_3 $Imax_3$ | $Vmax_N$ CI_N LI_N $Imax_N$

APPROVED NONINCENDIVE SUPPLY
Voc
Ca
La

SEE SHT 5, NOTES 2 & 4

WIRING PER NEC® (NFPA 70) 501-4 (b) EXCEPTION (NONINCENDIVE FIELD CIRCUIT)

NFPA 70 National Electrical Code® ARTICLE 501-4(b) EXCEPTION: "WIRING IN NONINCENDIVE CIRCUITS SHALL BE PERMITTED USING ANY OF THE METHODS SUITABLE FOR WIRING IN ORDINARY LOCATIONS."

IN NORMAL OPERATION

DEVICES CONTROL THROUGH-CURRENT

PARAMETERS (NON-INCENDIVE FIELD WIRING) | DEVICE

ROSEMOUNT 3051SMV

	3051SMV 4-20mA / HART
Vmax	42.4v
Maximum normal operating current	22mA
C_i	14.8nF
L_i	0uH

$Imax_N >= Iq_N + Isignal_N$

ROSEMOUNT 3051 TRANSMITTERS ARE CURRENT CONTROLLERS ON INDIVIDUAL PARALLEL BRANCHES WITH RESPECT TO THE POWER SUPPLY. IN NONINCENDIVE INSTALLATIONS THE Imax FOR EACH TRANSMITTER IS NOT RELATED TO THE MAXIMUM CURRENT OF THE POWER SUPPLY (Isc) IN THE SAME MANNER AS FOR TRANSMITTER INSTALLED PER I.S. REQUIREMENTS, BECAUSE NONINCENDIVE REQUIREMENTS INCLUDE ONLY NORMAL OPERATING CONDITIONS.

REFERENCE: APPENDIX A7 (FM3611 2004)

Imax for an individual device = Iq + Isignal

Iq =Quiescent current through device (Maximum quiescent current for the device)

Isignal =Signaling current through device (Protocol may limit signaling to one device at a time)

Operating Imax = $Iq_1 + Iq_2 + ... + Iq_N + I_{signal\ max}$

$I_{signal\ max}$ = Max. of ($Isignal_1$, $Isignal_2$ ..... $Isignal_N$)

TEMP CODE: T4 (Ta = -50°C TO +70°C

Rosemount Inc.
8200 Market Boulevard
Chanhassen, MN 55317 USA

CAD MAINTAINED (MicroStation)

DR. Myles Lee Miller	SIZE A	FSCM NO	DWG NO. 03151-1206
ISSUED	SCALE N/A	WT. ———	SHEET 4 OF 5

Form Rev AC

REVISIONS				
REV	DESCRIPTION	CHG. NO.	APP'D	DATE
AB				

NOTES:

1. NO REVISION TO THIS DRAWING WITHOUT PRIOR FM APPROVAL.
2. ASSOCIATED APPARATUS MANUFACTURER'S INSTALLATION DRAWING MUST BE FOLLOWED WHEN INSTALLING THIS EQUIPMENT.
3. DUST-TIGHT CONDUIT SEAL MUST BE USED WHEN INSTALLED IN CLASS II AND CLASS III ENVIRONMENTS.
4. CONTROL EQUIPMENT CONNECTED TO ASSOCIATED APPARATUS MUST NOT USE OR GENERATE MORE THAN 250 Vrms or Vdc.
5. RESISTANCE BETWEEN INTRINSICALLY SAFE GROUND AND EARTH GROUND MUST BE LESS THAN 1.0 OHM.
6. INSTALLATION SHOULD BE IN ACCORDANCE WITH ANSI/ISA-RP12.06.01 "INSTALLATION OF INTRINSICALLY SAFE SYSTEMS FOR HAZARDOUS (CLASSIFIED) LOCATIONS" AND THE NATIONAL ELECTRICAL CODE (ANSI/NFPA 70).
7. THE ASSOCIATED APPARATUS MUST BE FM APPROVED.
8. WARNING - SUBSTITUTION OF COMPONENTS MAY IMPAIR INTRINSIC SAFETY.
9. THE ENTITY CONCEPT ALLOWS INTERCONNECTION OF INTRINSICALLY SAFE APPARATUS WITH ASSOCIATED APPARATUS WHEN THE FOLLOWING IS TRUE:
   Vmax or U_i IS GREATER THAN or EQUAL TO Voc, Vt or Uo
   Imax or I_i IS GRETER THAN or EQUAL TO Isc, It or Io
   Pmax or P_i IS GRETER THAN or EQUAL TO Po
   Ca IS GREATER THAN or EQUAL TO THE SUM OF ALL C_i's PLUS Ccable
   La IS GREATER THAN or EQUAL TO THE SUM OF ALL L_i's PLUS Lcable
10. WARNING - TO PREVENT IGNITION OF FLAMMABLE OR COMBUSTIBLE ATMOSPHERES, DISCONNECT POWER BEFORE SERVICING.
11. THE ASSOCIATED APPARATUS MUST BE A RESISTIVELY LIMITED SINGLE OR MULTIPLE CHANNEL FM APPROVED BARRIER HAVEING PARAMETERS LESS THAN THOSE QUOTED, AND FOR WHICH THE OUTPUT AND THE COMBINATIONS OF OUTPUTS IS NON-IGNITION CAPABLE FOR THE CLASS, DIVISION AND GROUP OF USE.

Rosemount Inc. 8200 Market Boulevard Chanhassen, MN 55317 USA			CAD MAINTAINED (MicroStation)	
DR. Myles Lee Miller	SIZE A	FSCM NO	DWG NO. 03151-1206	
ISSUED	SCALE N/A	WT. ———	SHEET 5 OF 5	

Form Rev AC

B.5.2 Canadian Standards Association (CSA)

CONFIDENTIAL AND PROPRIETARY INFORMATION IS CONTAINED HEREIN AND MUST BE HANDLED ACCORDINGLY	REVISIONS				
	REV	DESCRIPTION	CHG. NO.	APP'D	DATE
	AA	NEW RELEASE	RTC1025256	A.J.W.	1/2/08

APPROVALS FOR

OUTPUT CODE "A" I.S. ENTITY PARAMETERS SHEET 2
OUTPUT CODE "A" (4-20 mA HART) I.S. SEE SHEETS 3 & 4

TO ASSURE AN INTRINSICALLY SAFE SYSTEM, THE TRANSMITTER AND BARRIER MUST BE WIRED IN ACCORDANCE WITH THE BARRIER MANUFACTURER'S FIELD WIRING INSTRUCTIONS AND THE APPLICABLE CIRCUIT DIAGRAM.

WARNING - EXPLOSION HAZARD - SUBSTITUTION OF COMPONENTS MAY IMPAIR SUITABILITY FOR CLASS I, DIVISION I.

AVERTISSEMENT - RISQUE D'EXPLOSION - LA SUBSTITUTION DE COMPOSANTS PEUT RENDRE CE MATERIEL INACCEPTABLE POUR LES EMPLACEMENTS DE CLASSE I, DIVISION I.

CAD MAINTAINED (MicroStation)

UNLESS OTHERWISE SPECIFIED DIMENSIONS IN INCHES [mm]. REMOVE ALL BURRS AND SHARP EDGES. MACHINE SURFACE FINISH 125 -TOLERANCE- .X ± .1 [2,5] .XX ± .02 [0,5] .XXX ± .010 [0,25] FRACTIONS ± 1/32 ANGLES ± 2° DO NOT SCALE PRINT	CONTRACT NO.	EMERSON. Process Management ROSEMOUNT® 8200 Market Boulevard • Chanhassen, MN 55317 USA	
	DR. Myles Lee Miller 12/17/07	TITLE INDEX OF I.S. CSA FOR 3051SMV	
	CHK'D		
	APP'D.		
		SIZE A / FSCM NO / DWG NO. 03151-1207	
	APP'D. GOVT.	SCALE N/A / WT. ——— / SHEET 1 OF 5	

Form Rev AC

REVISIONS				
REV	DESCRIPTION	CHG. NO.	APP'D	DATE
AA				

ENTITY CONCEPT APPROVALS

THE ENTITY CONCEPT ALLOWS INTERCONNECTION OF INTRINSICALLY SAFE APPARATUS TO ASSOCIATED APPARATUS NOT SPECIFICALLY EXAMINED IN COMBINATION AS A SYSTEM. THE APPROVED VALUES OF MAX. OPEN CIRCUIT VOLTAGE (Voc) AND MAX. SHORT CIRCUIT CURRENT (Isc) AND MAX. POWER (Voc X Isc/4), FOR THE ASSOCIATED APPARATUS MUST BE LESS THAN OR EQUAL TO THE MAXIMUM SAFE INPUT VOLTAGE (Vmax), MAXIMUM SAFE INPUT CURRENT (Imax), AND MAXIMUM SAFE INPUT POWER (Pmax) OF THE INTRINSICALLY SAFE APPARATUS. IN ADDITION, THE APPROVED MAX. ALLOWABLE CONNECTED CAPACITANCE (Ca) OF THE ASSOCIATED APPARATUS MUST BE GREATER THAN THE SUM OF THE INTERCONNECTING CABLE CAPACITANCE AND THE UNPROTECTED INTERNAL CAPACITANCE (C_i) OF THE INTRINSICALLY SAFE APPARATUS, AND THE APPROVED MAX. ALLOWABLE CONNECTED INDUCTANCE (La) OF THE ASSOCIATED APPARATUS MUST BE GREATER THAN THE SUM OF THE INTERCONNECTING CABLE INDUCTANCE AND THE UNPROTECTED INTERNAL INDUCTANCE (L_i) OF THE INTRINSICALLY SAFE APPARATUS.

FOR OUTPUT CODE "A" MODEL 3051SMV
CLASS I, DIV. 1, GROUPS A, B, C AND D

V_{MAX} = 30V	V_{OC} IS LESS THAN OR EQUAL TO 30V
I_{MAX} = 300mA	I_{SC} IS LESS THAN OR EQUAL TO 300mA
C_i = 14.8nF	C_A IS GREATER THAN 14.8nF + Ccable
L_i = 0μH	L_A IS GREATER THAN 0μH + Lcable

NOTE: ENTITY PARAMETERS LISTED APPLY ONLY TO ASSOCIATED APPARATUS WITH LINEAR OUTPUT.

Rosemount Inc.
8200 Market Boulevard
Chanhassen, MN 55317 USA

DR. Myles Lee Miller
ISSUED

CAD MAINTAINED (MicroStation)

SIZE	FSCM NO	DWG NO.	
A		03151-1207	
SCALE N/A	WT. ———	SHEET 2 OF 5	

Form Rev AC

REVISIONS				
REV	DESCRIPTION	CHG. NO.	APP'D	DATE
AA				

CSA INTRINSIC SAFETY APPROVALS

CIRCUIT CONNECTION WITH BARRIER OR CONVERTER

Ex ia

INTRINSICALLY SAFE/SECURITE INTRINSEQUE
4-20 mA, ("A" OUTPUT CODE)

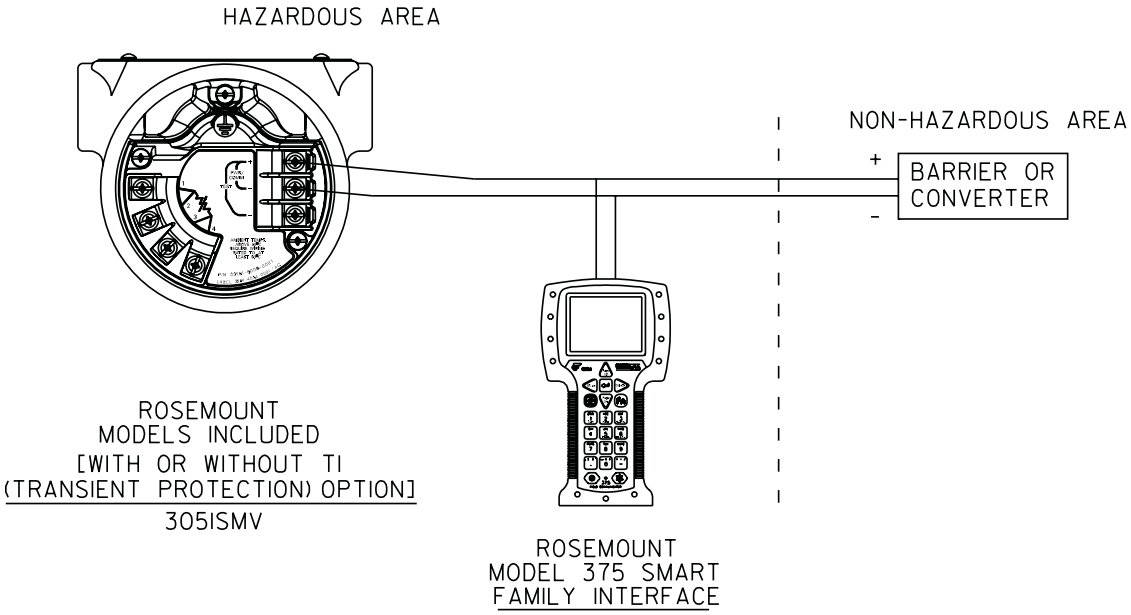

Rosemount Inc. 8200 Market Boulevard Chanhassen, MN 55317 USA			CAD MAINTAINED (MicroStation)
DR. Myles Lee Miller 12/17/07	SIZE A	FSCM NO	DWG NO. 03151-1207
ISSUED	SCALE N/A	WT.	SHEET 3 OF 5

Form Rev AC

REVISIONS				
REV	DESCRIPTION	CHG. NO.	APP'D	DATE
AA				

4-20 mA, ("A" OUTPUT CODE)

DEVICE	PARAMETERS	APPROVED FOR CLASS I, DIV.I
CSA APPROVED SAFETY BARRIER	30 V OR LESS *330 OHMS OR MORE *28 V OR LESS 300 OHMS OR MORE 25 V OR LESS 200 OHMS OR MORE *22 V OR LESS 180 OHMS OR MORE	GROUPS A, B, C, D
FOXBORO CONVERTER 2AI-I2V-CGB, 2AI-I3V-CGB, 2AS-I3I-CGB, 3A2-I2D-CGB, 3A2-I3D-CGB, 3AD-I3I-CGB, 3A4-I2D-CGB, 2AS-I2I-CGB, 3F4-I2DA		GROUPS B, C, D
CSA APPROVED SAFETY BARRIER	30 V OR LESS 150 OHMS OR MORE	GROUPS C, D

Rosemount Inc.
8200 Market Boulevard
Chanhassen, MN 55317 USA

CAD MAINTAINED (MicroStation)

DR. Myles Lee Miller	SIZE A	FSCM NO	DWG NO. 03151-1207
ISSUED	SCALE N/A	WT. ———	SHEET 4 OF 5

Form Rev AC

REVISIONS				
REV	DESCRIPTION	CHG. NO.	APP'D	DATE
AA				

NOTES:

1. APPROVED ASSOCIATED APPARATUS MUST BE INSTALLED IN ACCORDANCE WITH MANUFACTURER'S INSTRUCTIONS.
2. CSA APPROVED ASSOCIATED APPARATUS MUST MEET THE FOLLOWING PARAMETERS: Voc LESS THAN OR EQUAL TO (Vmax AND Isc LESS THAN OR EQUAL TO (Imax).
3. THE MAXIMUM NON-HAZARDOUS AREA VOLTAGE MUST NOT EXCEED 250V.
4. THE INSTALLATION MUST BE IN ACCORDANCE WITH CANADIAN ELECTRICAL
5. CAUTION: USE ONLY SUPPLY WIRES SUITABLE FOR 5°C ABOVE SURROUNDING TEMPERATURE.
6. WARNING: SUBSTITUTION OF COMPONENTS MAY IMPAIR INTRINSIC SAFETY.

Rosemount Inc.
8200 Market Boulevard
Chanhassen, MN 55317 USA

DR. Myles Lee Miller

ISSUED

CAD MAINTAINED (MicroStation)

SIZE	FSCM NO	DWG NO.	
A		03151-1207	
SCALE N/A	WT. ———	SHEET 5 OF 5	

Form Rev AC

B.5.3 GE / GM option NEMA 4X

CONFIDENTIAL AND PROPRIETARY INFORMATION IS CONTAINED HEREIN AND MUST BE HANDLED ACCORDINGLY.	REVISIONS				
	REV	DESCRIPTION	ECO NO.	APP'D	DATE
	AA	NEW RELEASE	RTC1022362	B.L.H.	9/1/06

NOTES:

1. USE TURCK CORDSETS AS SPECIFIED IN THIS DRAWING WITH GE / GM OPTION TO ENSURE OUTDOOR RATING (NEMA 4X or IP66).

2. LOK-FAST GUARD IS REQUIRED FOR CLASS I DIVISION 2 INSTALLATIONS.

3. (X)XXV 49-4.5IN/14.5 IS INSTALLED INTO 1/2-14 NPT CONDUIT ENTRY THREADS. (X)XXV 49-4.5IN/M20 IS INSTALLED INTO CM20 CONDUIT ENTRY THREADS.

4. eurofast® AND minifast® ARE REGISTERED TRADEMARKS OF TURCK INC.

UNLESS OTHERWISE SPECIFIED DIMENSIONS IN INCHES [mm]. REMOVE ALL BURRS AND SHARP EDGES. MACHINE SURFACE FINISH 125 -TOLERANCES- .X ± .1 [2,5] .XX ± .02 [0,5] .XXX ± .010 [0,25] FRACTIONS ± 1/32 ANGLES ± 2° DO NOT SCALE PRINT	EMERSON. Process Management ROSEMOUNT® 8200 Market Boulevard Chanhassen, MN 55317 USA					
	TITLE: GE / GM OPTION NEMA 4X INSTALLATION, FM					
	DR. Myles Lee Miller 8/29/06	SIZE A	DRAWING NO. 03151-1009	REV AA		
	APP'D Bryce Hagbom 8/30/06					
	CAD MAINTAINED, (PRO/E)		SHEET 1 OF 3			

Form Rev AA

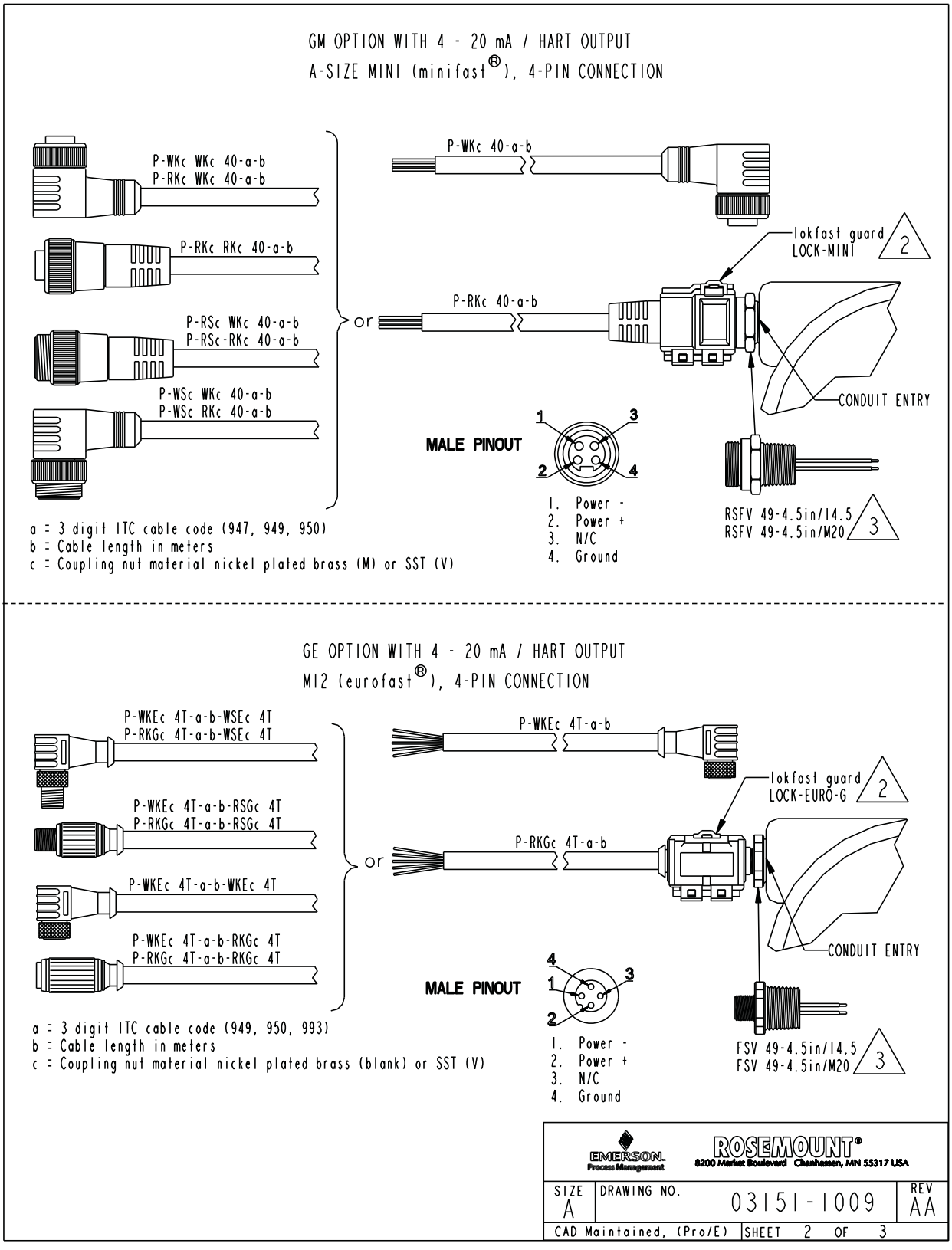
GM OPTION WITH 4 - 20 mA / HART OUTPUT
A-SIZE MINI (minifast®), 4-PIN CONNECTION
P-WKc WKc 40-a-b
P-RKc WKc 40-a-b
P-RKc RKc 40-a-b
P-RSc WKc 40-a-b
P-RSc-RKc 40-a-b
P-WSc WKc 40-a-b
P-WSc RKc 40-a-b
or
P-WKc 40-a-b
P-RKc 40-a-b
lokfast guard
LOCK-MINI
2
CONDUIT ENTRY
MALE PINOUT
1
2
3
4
1. Power -
2. Power +
3. N/C
4. Ground
RSFV 49-4.5in/14.5
RSFV 49-4.5in/M20
3
a = 3 digit ITC cable code (947, 949, 950)
b = Cable length in meters
c = Coupling nut material nickel plated brass (M) or SST (V)
GE OPTION WITH 4 - 20 mA / HART OUTPUT
M12 (eurofast®), 4-PIN CONNECTION
P-WKEc 4T-a-b-WSEc 4T
P-RKGc 4T-a-b-WSEc 4T
P-WKEc 4T-a-b-RSGc 4T
P-RKGc 4T-a-b-RSGc 4T
P-WKEc 4T-a-b-WKEc 4T
P-WKEc 4T-a-b-RKGc 4T
P-RKGc 4T-a-b-RKGc 4T
or
P-WKEc 4T-a-b
P-RKGc 4T-a-b
lokfast guard
LOCK-EURO-G
2
CONDUIT ENTRY
MALE PINOUT
4
1
3
2
1. Power -
2. Power +
3. N/C
4. Ground
FSV 49-4.5in/14.5
FSV 49-4.5in/M20
3
a = 3 digit ITC cable code (949, 950, 993)
b = Cable length in meters
c = Coupling nut material nickel plated brass (blank) or SST (V)
EMERSON Process Management
ROSEMOUNT®
8200 Market Boulevard Chanhassen, MN 55317 USA
SIZE A
DRAWING NO. 03151-1009
REV AA
CAD Maintained, (Pro/E)
SHEET 2 OF 3
Form Rev AA

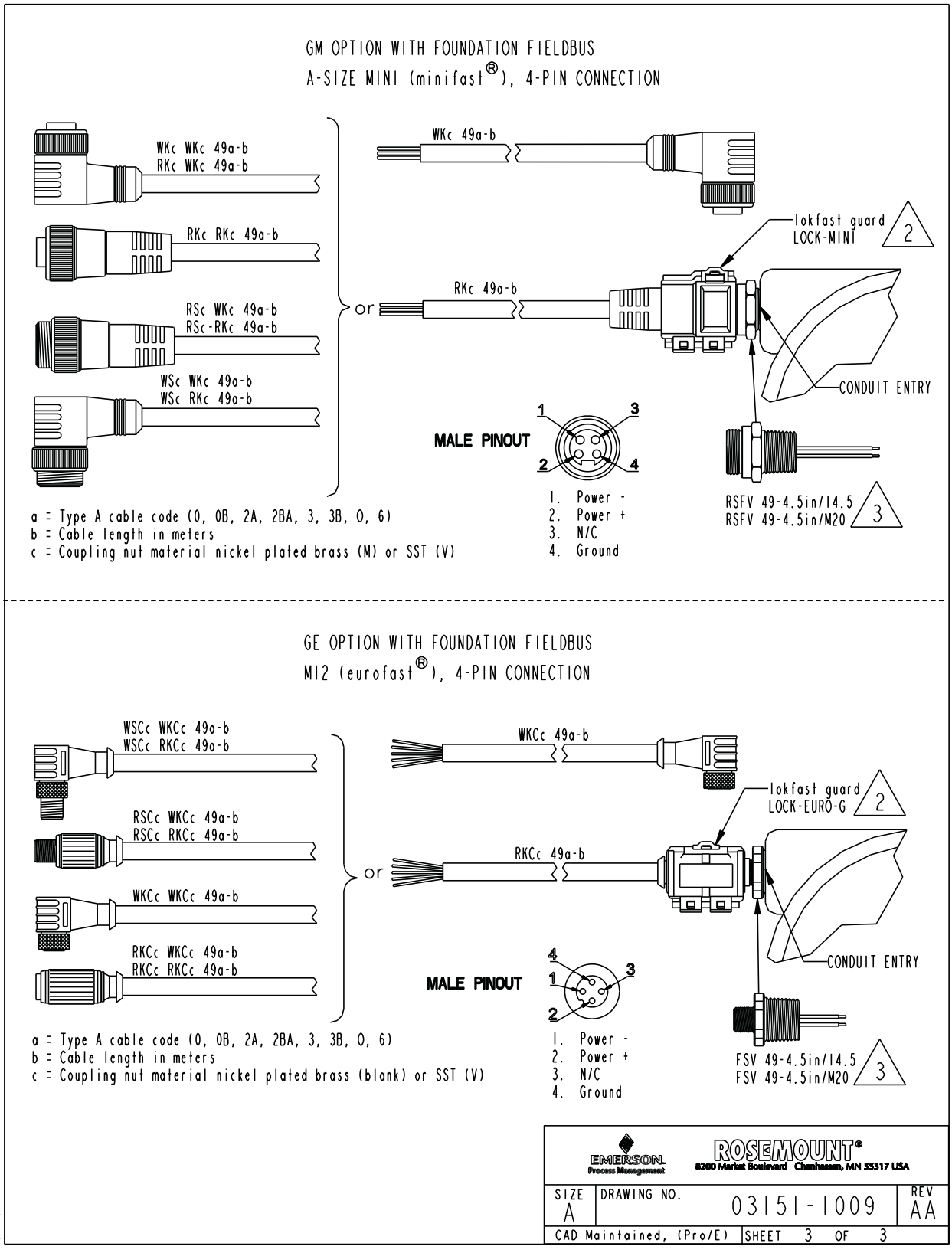
GM OPTION WITH FOUNDATION FIELDBUS
A-SIZE MINI (minifast®), 4-PIN CONNECTION
WKc WKc 49a-b
RKc WKc 49a-b
RKc RKc 49a-b
RSc WKc 49a-b
RSc-RKc 49a-b
WSc WKc 49a-b
WSc RKc 49a-b
or
WKc 49a-b
RKc 49a-b
lokfast guard
LOCK-MINI
2
CONDUIT ENTRY
MALE PINOUT
1
2
3
4
1. Power -
2. Power +
3. N/C
4. Ground
RSFV 49-4.5in/14.5
RSFV 49-4.5in/M20
3
a = Type A cable code (0, 0B, 2A, 2BA, 3, 3B, 0, 6)
b = Cable length in meters
c = Coupling nut material nickel plated brass (M) or SST (V)
GE OPTION WITH FOUNDATION FIELDBUS
M12 (eurofast®), 4-PIN CONNECTION
WSCc WKCc 49a-b
WSCc RKCc 49a-b
RSCc WKCc 49a-b
RSCc RKCc 49a-b
WKCc WKCc 49a-b
RKCc WKCc 49a-b
RKCc RKCc 49a-b
or
WKCc 49a-b
RKCc 49a-b
lokfast guard
LOCK-EURO-G
2
CONDUIT ENTRY
MALE PINOUT
4
1
2
3
1. Power -
2. Power +
3. N/C
4. Ground
FSV 49-4.5in/14.5
FSV 49-4.5in/M20
3
a = Type A cable code (0, 0B, 2A, 2BA, 3, 3B, 0, 6)
b = Cable length in meters
c = Coupling nut material nickel plated brass (blank) or SST (V)
EMERSON Process Management
ROSEMOUNT®
8200 Market Boulevard Chanhassen, MN 55317 USA
SIZE A
DRAWING NO. 03151-1009
REV AA
CAD Maintained, (Pro/E)
SHEET 3 OF 3
Form Rev AA

Index

A

Address
- Changing . . . 41

Alarm
- Failure mode values . . . 34
- Level verification . . . 36

Approvals
- Drawings . . . 15

B

Backup Temperature Mode . . . 61

Bolts
- Installation . . . 16
- Material . . . 17

Brackets
- Mounting . . . 15

Burst Mode . . . 39

C

Calibration
- Sensor trim . . . 12

Calibration Type
- Differential Pressure . . . 14
- Static Pressure . . . 16

Callendar-Van Dusen Constants . . . 17

Configuration
- Device Configuration . . . 31
- Flow Configuration . . . 13

Considerations
- Compatibility . . . 11
- Environmental . . . 11
- Mechanical . . . 11

D

Diagrams
- HART terminal block . . . 21
- Installation . . . 18

Drawings
- Approval . . . 15

E

Engineering Assistant . . . 11
- Custom Gas . . . 28
- Custom Liquid . . . 29
- Database
  - Liquids and Gases . . . 19
- Flow Configuration . . . 13
- Installation and Initial Setup . . . 11
- Natural Gas . . . 26
- Online and Offline Mode . . . 14

Environmental considerations . . . 11

F

Failure mode alarm and saturation
- Values . . . 34

Feature Board . . . 12, 24

Field Upgrades . . . 23

G

Grounding
- External assembly . . . 25
- Internal connection . . . 25
- Signal wiring grounding . . . 24

H

Housing Rotation . . . 12

I

Impulse piping . . . 20

Installation . . . 9
- Bolts . . . 16
- Cover . . . 13
- Mounting . . . 15
  - Brackets . . . 15
  - Torque values . . . 16
- Process Flange Orientation . . . 14

Introduction . . . 1

L

LCD Display Rotation . . . 13

Loop Test . . . 19

M

Maintenance . . . 9

Manifolds . . . 27

Mounting
- Bolt installation
  - Torque values . . . 16
- Installation . . . 15

Mounting requirements
- Liquid . . . 17
- Steam . . . 18

Multidrop Communication . . . 41

N

NAMUR-compliant values . . . 35

O

Operation . . . 9

O-Ring . . . 19

P

Piping, impulse 20
Process connections 18

R

Recall Factory Trim
    Differential Pressure 14
    Process Temperature 17
    Static Pressure 16
RTD Wiring 23

S

Saturation
    Failure mode values 34
Security (Write Protect) 11
Sensor Matching 17
Sensor trim 12
Service Support 2
Spare parts 37
Status 13
Switches and jumpers
    Security (Write Protect) 11

T

Tag
    Device 32
Temperature Mode 61
Terminal block diagrams
    HARTprotocol 21
Test Calculation 20
Three-Wire RTD 23
Torque values 16
Transfer Function 63
Transient
    Protection 23
Trim
    Analog Output 18
    Scaled Analog Output 18
    Sensor 12
    Zero 12
Troubleshooting 9
    Communication problems 14
    Erratic PV Reading 15
    High PV Reading 15
    Low PV Reading or No PV Reading 16
    Reference table 12
    Sluggish Output Response/Drift 16
Typical Installation Site 15

W

Wiring
    Transients 23

Reference Manual
00809-0100-4803, Rev DA
April 2013

Standard Terms and Conditions of Sale can be found at www.rosemount.com/terms_of_sale
The Emerson logo is a trademark and service mark of Emerson Electric Co.
Rosemount. the Rosemount logotype, and SMART FAMILY are registered trademarks of Rosemount Inc.
Coplanar is a trademark of Rosemount Inc.
Halocarbon is a trademark of the Halocarbon Products Corporation.o.
Fluorinert is a registered trademark of Minnesota Mining and Manufacturing Company Corporation
Syltherm 800 and D.C. 200 are registered trademarks of Dow Corning Corporation.
Neobee M-20 is a registered trademark of PVO International, Inc.
HART is a registered trademark of the HART Communication Foundation.
Foundation fieldbus is a registered trademark of the Fieldbus Foundation.
All other marks are the property of their respective owners.

© April 2013 Rosemount, Inc. All rights reserved.

Emerson Process Management
Rosemount Measurement
8200 Market Boulevard
Chanhassen MN 55317 USA
Tel (USA) 1 800 999 9307
Tel (International) +1 952 906 8888
Fax +1 952 906 8889

Emerson Process Management
GmbH & Co.
Argelsrieder Feld 3
82234 Wessling
Germany
Tel 49 (8153) 9390
Fax 49 (8153) 939172

Emerson Process Management Asia
Pacific Private Limited
1 Pandan Crescent
Singapore 128461
T (65) 6777 8211
F (65) 6777 0947
Enquiries@AP.EmersonProcess.com

Beijing Rosemount Far East
Instrument Co., Limited
No. 6 North Street,
Hepingli, Dong Cheng District
Beijing 100013, China
T (86) (10) 6428 2233
F (86) (10) 6422 8586

ROSEMOUNT®

EMERSON™
Process Management

Product Data Sheet
July 2014
00813-0100-4801, Rev SB

Rosemount 3051S Series of Instrumentation
Scalable pressure, flow, and level solutions



Innovation reaching across your operation

With the Rosemount 3051S Series of Instrumentation, you can optimize your operation in these critical areas: production, quality, energy efficiency, and safety and environment. By leveraging the power of the scalable Rosemount 3051S across your entire operation, you'll be able to minimize process variability, gain greater process insight, reduce maintenance and downtime, and meet regulatory demands. What's more, it's easy for your people to use, ensuring you will realize the full potential of your measurement investment.

ROSEMOUNT

EMERSON.
Process Management

Rosemount 3051S SuperModule™ Platform



The most advanced pressure, flow, and level measurements

- The all-welded hermetic SST design delivers the industry's highest field reliability
- Ultra performance provides up to ±0.025% accuracy and 200:1 rangedown
- Ultra for Flow performance provides up to ±0.04% of reading and 14:1 flow turndown
- 15-year stability and 15-year limited warranty
- SIL3 Capable: IEC 61508 certified by an accredited 3rd party agency for use in safety instrumented systems up to SIL 3 [minimum requirement of single use (1oo1) for SIL 2 and redundant use (1oo2) for SIL 3]

Rosemount 3051S Series selection guide



Rosemount 3051S Coplanar™ differential, gage, or absolute transmitter

See ordering information on page 5.

- Coplanar Platform enables integrated manifold, primary element, and seal system solutions
- Dual-capacitance Saturn™ sensor technology corrects for overpressure and line pressure effects
- Calibrated spans from 0.1 inH_2O to 4000 psi (0,25 mbar to 276 bar)
- Available with 316L SST, Alloy C-276, Alloy 400, Tantalum, gold-plated Alloy 400, or gold-plated 316L SST process isolators



Rosemount 3051S in-line gage or absolute transmitter

See ordering information on page 13.

- Direct threaded connection, manifold or seal system solutions
- Piezoresistive sensor technology allows calibrated spans from 0.3 to 10000 psi (20,7 mbar to 689 bar)
- Available with 316L SST or Alloy C-276 process isolators

Contents

Rosemount 3051S Coplanar Pressure Transmitter 5
Rosemount 3051S In-Line Pressure Transmitter 13
Rosemount 3051S MultiVariable Transmitter 19
Rosemount 3051SF DP Flowmeters 26
Rosemount 3051S Electronic Remote Sensor (ERS) System 50
Rosemount 3051S Scalable™ Level Transmitter 63
Specifications 81
Rosemount 3051S/3051SFx (Measurement Type D)/ 3051S ERS Certifications 101
Rosemount 3051S and 3051SMV Wireless Certifications 106
Rosemount 3051SMV/3051SFx (Measurement Type 1-7) Certifications 108
Dimensional Drawings 111

Rosemount 3051S MultiVariable Transmitter

See ordering information on page 19.



- Combines differential pressure, static pressure, and process temperature measurements along with mass and energy flow in a single device
- Compensates for 25+ different variables providing accurate and repeatable flow readings
- Customize pressure and temperature compensation for any flow application
- Easily configure flow and device parameters with Engineering Assistant™ Software

Rosemount 3051SF DP Flowmeters

See ordering information on page 26.



- Integrates the 3051S with Rosemount's industry leading primary elements to create one complete flowmeter assembly
- Fully assembled, configured and leak tested for out-of-the-box installation
- Reduce installed costs by replacing 10 parts traditionally used for a DP Flow installation with one flowmeter
- Reduce straight pipe requirements, lower permanent pressure loss, and achieve accurate measurement in small line sizes

Rosemount 3051S Electronic Remote Sensor (ERS™) System

See ordering information on page 50.



- The industry's first digital DP Level architecture consists of a single 4-20 mA HART® loop with two 3051S pressure sensors connected electronically
- Unique digital architecture enables stable and repeatable DP Level measurements on tall vessels, towers, and applications with wide-varying temperatures
- Achieve increased process insight and diagnostics with MultiVariable measurements including DP, Pressure, and Scaled Variable for Tank Level or Volume
- Simplify installations and maintenance by eliminating wet or dry legs, heat tracing, and purge systems

Rosemount 3051S Level Transmitter

See ordering information on page 63.



- Level transmitters combine world-class 3051S pressure transmitters with direct-mount seals, all in a single integrated model number
- Connect to virtually any process with a comprehensive offering of seal types, sizes, fill fluids, and diaphragm materials
- Combine with an 1199 Remote Mount Seal to form a Tuned-System™ Assembly for a cost effective, easy-to-install DP Level measurement solution

Advanced functionality

*Wireless*HART® (IEC 62591) capabilities



Available on coplanar, in-line, multivariable, DP flowmeters and level transmitters

- Quickly deploy new pressure, level and flow measurements in 70% less time
- Eliminate wiring design and construction complexities to lower costs by 40 - 60%
- Reduce pipe penetrations and impulse piping with industry-leading MultiVariable technology
- Extended range antenna capabilities provide access to remote locations
- Delivering over a decade of maintenance free performance with 15-year stability and 10-year power module life

Advanced diagnostic capabilities



Available on coplanar, in-line, DP flowmeters and level transmitters

- Provides diagnostic coverage from the process to the transmitter to the host
- Prevent on-scale failures by diagnosing electrical loop issues with Power Advisory diagnostics
- Statistical Process Monitoring detects abnormal process conditions enabling more productive and safer operations
- Extend diagnostic coverage to Safety Instrumented Systems with IEC 61508 SIL 2/3 capable rating

Remote display and interface



Available on coplanar, in-line, DP flowmeters, electronic remote sensors, and level transmitters

- Direct mount to the process and access transmitter capabilities and diagnostics at grade
- Get access up to 100 feet (30 m) away from the process to ensure personnel safety
- Eliminate the need for impulse lines for best practice installations

Rosemount Instrument Manifolds



Available on traditional, coplanar, and in-line transmitters

- Designed and engineered to provide optimal performance with Rosemount 3051S transmitters
- Reduce cost and leak points with flangeless coplanar design
- Fully integrated manifold and transmitter assemblies come fully leak checked, calibrated and assembled allowing for one purchase order to save time and cost
- Rosemount manifolds provide a wide variety of styles, materials, and configurations to fit any process

Rosemount 3051S Coplanar Pressure Transmitter



3051S Coplanar Pressure Transmitter

Rosemount 3051S Coplanar Pressure Transmitters are the industry leader for differential, gage, and absolute pressure measurement. The Coplanar Platform allows seamless integration with manifolds, primary elements, and seal solutions. Capabilities include:

- Ultra, Ultra for Flow, and Classic Performance
- 4-20 mA HART, Wireless, FOUNDATION™ fieldbus protocols
- Safety Certification (Option Code QT)
- Advanced Diagnostics (Option Code DA2)
- Remote Display and Interface (Option Code M7, M8, or M9)

Additional Information
Specifications: page 81
Certifications: page 101
Dimensional drawings: page 111

Table 1. Rosemount 3051S Scalable Coplanar Pressure Transmitter ordering information

★ The Standard offering represents the most common options. The starred options (★) should be selected for best delivery.
The Expanded offering is subject to additional delivery lead time.

Model	Transmitter type			
3051S	Scalable Pressure Transmitter			
Performance class[1]				
Standard				**Standard**
1	Ultra: 0.025 percent span accuracy, 200:1 rangedown, 15-yr stability, 15-yr limited warranty			★
3[2]	Ultra for Flow: 0.04 percent reading accuracy, 200:1 turndown, 15-yr stability, 15-yr limited warranty			★
2	Classic: 0.035 percent span accuracy, 150:1 rangedown, 15-yr stability			★
Connection type				
Standard				**Standard**
C	Coplanar			★
Measurement type[3]				
Standard				**Standard**
D	Differential			★
G	Gage			★
Expanded				**Expanded**
A	Absolute			
Pressure range				
	Differential	**Gage**	**Absolute**	
Standard				**Standard**
1A	-25 to 25 inH_2O (-62,3 to 62,3 mbar)	-25 to 25 inH_2O (-62,3 to 62,3 mbar)	0 to 30 psia (0 to 2,06 bar)	★
2A	-250 to 250 inH_2O (-623 to 623 mbar)	-250 to 250 inH_2O (-623 to 623 mbar)	0 to 150 psia (0 to 10,34 bar)	★
3A	-1000 to 1000 inH_2O (-2,5 to 2,5 bar)	-393 to 1000 inH_2O (-0,98 to 2,5 bar)	0 to 800 psia (0 to 55,2 bar)	★
4A	-300 to 300 psi (-20,7 to 20,7 bar)	-14.2 to 300 psig (-0,98 to 20,7 bar)	0 to 4000 psia (0 to 275,8 bar)	★
5A	-2000 to 2000 psi (-137,9 to 137,9 bar)	-14.2 to 2000 psig (-0,98 to 137,9 bar)	N/A	★
Expanded				**Expanded**
0A[4]	-3 to 3 inH_2O (-7,47 to 7,47 mbar)	N/A	0 to 5 psia (0 to 0,34 bar)	

Table 1. Rosemount 3051S Scalable Coplanar Pressure Transmitter ordering information

★ The Standard offering represents the most common options. The starred options (★) should be selected for best delivery.

The Expanded offering is subject to additional delivery lead time.

Isolating diaphragm						
Standard						**Standard**
2[5]	316L SST					★
3[5]	Alloy C-276					★
Expanded						**Expanded**
4[5]	Alloy 400					
5[6]	Tantalum					
6[5]	Gold-Plated Alloy 400 (includes Graphite-Filled PTFE o-ring)					
7[5]	Gold-Plated 316L SST					
Process connection		**Size**	**Materials of construction**			
			Flange material	**Drain vent**	**Bolting**	
Standard						**Standard**
000	None (no process flange)					★
A11[7]	Assemble to Rosemount 305 Integral Manifold					★
A12[7]	Assemble to Rosemount 304 or AMF Manifold and SST traditional flange					★
A15	Assemble to Rosemount 304 or AMF manifold to SST Traditional Flange with Alloy C-276 Drain Vents					★
A16[7]	Assemble to 304 or AMF Manifold to DIN SST Traditional Flange					★
A22	Assemble AMF manifold to SST Coplanar Flange					★
B11[7][8][9]	Assemble to one Rosemount 1199 Seal		SST			★
B12[7][8][9]	Assemble to two Rosemount 1199 Seals		SST			★
C11[7]	Assemble to Rosemount 405C or 405P Primary Element					★
D11[7]	Assemble to Rosemount 1195 integral orifice and Rosemount 305 Integral Manifold					★
EA2[7]	Assemble to Rosemount 485 or 405A Annubar™ Primary Element with Coplanar flange		SST	316 SST		★
EA3[7]	Assemble to Rosemount 485 or 405A Annubar Primary Element with Coplanar flange		Cast C-276	Alloy C-276		★
EA5[7]	Assemble to Rosemount 485 or 405A Annubar Primary Element with Coplanar flange		SST	Alloy C-276		★
E11	Coplanar flange	1/4–18 NPT	CS	316 SST		★
E12	Coplanar flange	1/4–18 NPT	SST	316 SST		★
E13[5]	Coplanar flange	1/4–18 NPT	Cast C-276	Alloy C-276		★
E14	Coplanar flange	1/4–18 NPT	Cast Alloy 400	Alloy 400/K-500		★
E15[5]	Coplanar flange	1/4–18 NPT	SST	Alloy C-276		★
E16[5]	Coplanar flange	1/4–18 NPT	CS	Alloy C-276		★
E21	Coplanar flange	RC 1/4	CS	316 SST		★
E22	Coplanar flange	RC 1/4	SST	316 SST		★
E23[5]	Coplanar flange	RC 1/4	Cast C-276	Alloy C-276		★
E24	Coplanar flange	RC 1/4	Cast Alloy 400	Alloy 400/K-500		★
E25[5]	Coplanar flange	RC 1/4	SST	Alloy C-276		★
E26[5]	Coplanar flange	RC 1/4	CS	Alloy C-276		★
F12	Traditional flange	1/4–18 NPT	SST	316 SST		★
F13[5]	Traditional flange	1/4–18 NPT	Cast C-276	Alloy C-276		★
F14	Traditional flange	1/4–18 NPT	Cast Alloy 400	Alloy 400/K-500		★
F15[5]	Traditional flange	1/4–18 NPT	SST	Alloy C-276		★
F22	Traditional flange	RC 1/4	SST	316 SST		★
F23[5]	Traditional flange	RC 1/4	Cast C-276	Alloy C-276		★
F24	Traditional flange	RC 1/4	Cast Alloy 400	Alloy 400/K-500		★
F25[5]	Traditional flange	RC 1/4	SST	Alloy C-276		★
F52	DIN-compliant traditional flange	1/4–18 NPT	SST	316 SST	7/16-in. bolting	★

Table 1. Rosemount 3051S Scalable Coplanar Pressure Transmitter ordering information

★ The Standard offering represents the most common options. The starred options (★) should be selected for best delivery.
The Expanded offering is subject to additional delivery lead time.

G11	Vertical mount level flange	2-in. ANSI class 150	SST	316 SST		★
G12	Vertical mount level flange	2-in. ANSI class 300	SST	316 SST		★
G21	Vertical mount level flange	3-in. ANSI class 150	SST	316 SST		★
G22	Vertical mount level flange	3-in. ANSI class 300	SST	316 SST		★
G31	Vertical mount level flange	DIN- DN 50 PN 40	SST	316 SST		★
G41	Vertical mount level flange	DIN- DN 80 PN 40	SST	316 SST		★
Expanded						**Expanded**
F32	Bottom vent traditional flange	1/4–18 NPT	SST	316 SST		
F42	Bottom vent traditional flange	RC 1/4	SST	316 SST		
F62	DIN-compliant traditional flange	1/4–18 NPT	SST	316 SST	M10 bolting	
F72	DIN-compliant traditional flange	1/4–18 NPT	SST	316 SST	M12 bolting	
Transmitter output						
Standard						**Standard**
A	4–20 mA with digital signal based on HART protocol					★
F[10]	FOUNDATION fieldbus protocol					★
X[11]	Wireless (requires wireless options and wireless PlantWeb™ housing)					★
Housing style				**Material**	**Conduit entry size**	
Standard						**Standard**
00	None (SuperModule spare part, order output code A)					★
1A	PlantWeb housing			Aluminum	1/2–14 NPT	★
1B	PlantWeb housing			Aluminum	M20 x 1.5	★
1J	PlantWeb housing			SST	1/2–14 NPT	★
1K	PlantWeb housing			SST	M20 x 1.5	★
5A[12]	Wireless PlantWeb housing			Aluminum	1/2–14 NPT	★
5J[12]	Wireless PlantWeb housing			SST	1/2–14 NPT	★
2A	Junction Box housing			Aluminum	1/2–14 NPT	★
2B	Junction Box housing			Aluminum	M20 x 1.5	★
2J	Junction Box housing			SST	1/2–14 NPT	★
2E	Junction Box housing with output for remote display and interface			Aluminum	1/2–14 NPT	★
2F	Junction Box housing with output for remote display and interface			Aluminum	M20 x 1.5	★
2M	Junction Box housing with output for remote display and interface			SST	1/2–14 NPT	★
7J[13]	Quick Connect (A size Mini, 4-pin male termination)			SST		★
Expanded						**Expanded**
1C	PlantWeb housing			Aluminum	G1/2	
1L	PlantWeb housing			SST	G1/2	
2C	Junction Box housing			Aluminum	G1/2	
2G	Junction Box housing with output for remote display and interface			Aluminum	G1/2	

Wireless options (Requires option code X and wireless PlantWeb housing)

Update rate		
Standard		**Standard**
WA	User Configurable Update Rate	★
Operating frequency and protocol		
Standard		**Standard**
3	2.4 GHz DSSS, IEC 62591 (*Wireless*HART)	★
Omni-directional wireless antenna		
Standard		**Standard**
WK	External Antenna	★
WM	Extended Range, External Antenna	★

Table 1. Rosemount 3051S Scalable Coplanar Pressure Transmitter ordering information

★ The Standard offering represents the most common options. The starred options (★) should be selected for best delivery. The Expanded offering is subject to additional delivery lead time.

Expanded		Expanded
WN	High-Gain, Remote Antenna	
SmartPower™		
Standard		**Standard**
1[14]	Adapter for Black Power Module (I.S. Power Module Sold Separately)	★

Other options (include with selected model number)

PlantWeb control functionality		
Standard		**Standard**
A01[15]	FOUNDATION fieldbus Advanced Control Function Block Suite	★
PlantWeb diagnostic functionality		
Standard		**Standard**
D01[15]	FOUNDATION fieldbus Diagnostics Suite	★
DA2[15][16]	Advanced HART Diagnostics Suite	★
PlantWeb enhanced measurement functionality		
Standard		**Standard**
H01[15][17]	FOUNDATION fieldbus Fully Compensated Mass Flow Block	★
Mounting bracket[18]		
Standard		**Standard**
B4	Coplanar flange bracket, all SST, 2-in. pipe and panel	★
B1	Traditional flange bracket, CS, 2-in. pipe	★
B2	Traditional flange bracket, CS, panel	★
B3	Traditional flange flat bracket, CS, 2-in. pipe	★
B7	Traditional flange bracket, B1 with SST bolts	★
B8	Traditional flange bracket, B2 with SST bolts	★
B9	Traditional flange bracket, B3 with SST bolts	★
BA	Traditional flange bracket, B1, all SST	★
BC	Traditional flange bracket, B3, all SST	★
Software configuration		
Standard		**Standard**
C1[19]	Custom software configuration (Requires Configuration Data Sheet)	★
C2	Custom flow configuration (Requires H01 and Configuration Data Sheet)	★
Gage pressure calibration		
Standard		**Standard**
C3	Gage pressure calibration on Rosemount 3051S_CA4 only	★
Alarm Limit		
Standard		**Standard**
C4[15][19]	NAMUR alarm and saturation levels, high alarm	★
C5[15][19]	NAMUR alarm and saturation levels, low alarm	★
C6[15][19]	Custom alarm and saturation signal levels, high alarm (Requires C1 and Configuration Data Sheet)	★
C7[15][19]	Custom alarm and saturation signal levels, low alarm (Requires C1 and Configuration Data Sheet)	★
C8[15][19]	Low alarm (standard Rosemount alarm and saturation levels)	★
Hardware adjustments		
Standard		**Standard**
D1[15][19][20]	Hardware adjustments (zero, span, alarm, security)	★
Flange adapter		
Standard		**Standard**
D2[21]	1/2-14 NPT flange adapter	★

Table 1. Rosemount 3051S Scalable Coplanar Pressure Transmitter ordering information

★ The Standard offering represents the most common options. The starred options (★) should be selected for best delivery.
The Expanded offering is subject to additional delivery lead time.

Expanded		**Expanded**
D9[21]	RC1/2 SST flange adapter	
Custody transfer		
Standard		**Standard**
D3[22]	Measurement Canada Accuracy Approval	★
Ground screw		
Standard		**Standard**
D4[23]	External ground screw assembly	★
Drain/vent valve		
Standard		**Standard**
D5[21]	Delete transmitter drain/vent valves (install plugs)	★
Expanded		**Expanded**
D7[21]	SST Coplanar flange without drain/vent ports	
Conduit plug		
Standard		**Standard**
DO[24]	316 SST Conduit Plug	★
Product certifications[25]		
Standard		**Standard**
E1	ATEX Flameproof	★
I1	ATEX Intrinsic Safety	★
IA	ATEX FISCO Intrinsic Safety (FOUNDATION fieldbus protocol only)	★
N1	ATEX Type n	★
K1	ATEX Flameproof, Intrinsic Safety, Type n, Dust	★
ND	ATEX Dust	★
E4	TIIS Flameproof	★
I4[12]	TIIS Intrinsic Safety	★
E5	FM Explosion-proof, Dust Ignition-proof	★
I5	FM Intrinsically Safe; Nonincendive	★
IE	FM FISCO Intrinsically Safe (FOUNDATION fieldbus protocol only)	★
K5	FM Explosion-proof, Dust Ignition-proof, Intrinsically Safe, Division 2	★
E6[26]	CSA Explosion-proof, Dust Ignition-proof, Division 2	★
I6	CSA Intrinsically Safe	★
IF	CSA FISCO Intrinsically Safe (FOUNDATION fieldbus protocol only)	★
K6[26]	CSA Explosion-proof, Dust Ignition-proof, Intrinsically Safe, Division 2	★
E7	IECEx Flameproof, Dust	★
I7	IECEx Intrinsic Safety	★
IG	IECEx FISCO Intrinsic Safety (FOUNDATION fieldbus protocol only)	★
N7	IECEx Type n	★
K7	IECEx Flameproof, Dust, Intrinsic Safety, Type n	★
E2	INMETRO Flameproof	★
I2	INMETRO Intrinsic Safety	★
IB	INMETRO FISCO Intrinsic Safety	★
K2	INMETRO Flameproof, Intrinsic Safety	★
E3	China Flameproof	★
I3	China Intrinsic Safety	★
N3	China Type n	★
KA[26]	ATEX and CSA Flameproof, Intrinsically Safe, Division 2	★
KB[26]	FM and CSA Explosion-proof, Dust Ignition-proof, Intrinsically Safe, Division 2	★
KC	FM and ATEX Explosion-proof, Intrinsically Safe, Division 2	★
KD[26]	FM, CSA, and ATEX Explosion-proof, Intrinsically Safe	★
KG	FM, CSA, ATEX and IECEx FISCO Intrinsic Safety	★

Table 1. Rosemount 3051S Scalable Coplanar Pressure Transmitter ordering information

★ The Standard offering represents the most common options. The starred options (★) should be selected for best delivery. The Expanded offering is subject to additional delivery lead time.

Shipboard approvals		
Standard		**Standard**
SBS	American Bureau of Shipping	★
Sensor fill fluid		
Standard		**Standard**
L1[27]	Inert sensor fill fluid	★
O-ring		
Standard		**Standard**
L2	Graphite-filled PTFE o-ring	★
Bolting material		
Standard		**Standard**
L4[21]	Austenitic 316 SST bolts	★
L5[21]	ASTM A 193, Grade B7M bolts	★
L6[21]	Alloy K-500 bolts	★
L7[21][28]	ASTM A453, Class D, Grade 660 bolts	★
L8[21]	ASTM A193, Class 2, Grade B8M bolts	★
Display type[29]		
Standard		**Standard**
M5	PlantWeb LCD display	★
M7[15][30][31]	Remote mount LCD display and interface, PlantWeb housing, no cable, SST bracket	★
M8[15][30]	Remote mount LCD display and interface, PlantWeb housing, 50 ft. (15 m) cable, SST bracket	★
M9[15][30]	Remote mount LCD display and interface, PlantWeb housing, 100 ft. (31 m) cable, SST bracket	★
Pressure testing		
Expanded		**Expanded**
P1[32]	Hydrostatic testing with certificate	
Special cleaning		
Expanded		**Expanded**
P2[21]	Cleaning for special services	
P3[21]	Cleaning for less than 1PPM chlorine/fluorine	
Maximum static line pressure		
Standard		**Standard**
P9	4500 psig (310 bar) static pressure limit (Rosemount 3051S_CD only)	★
P0[33]	6092 psig (420 bar) static pressure limit (Rosemount 3051S2CD only)	★
Calibration certification		
Standard		**Standard**
Q4	Calibration certificate	★
QP	Calibration certificate and tamper evident seal	★
Material traceability certification		
Standard		**Standard**
Q8	Material traceability certification per EN 10204 3.1	★
Quality certification for safety		
Standard		**Standard**
QS[15][19]	Prior-use certificate of FMEDA Data	★
QT[34]	Safety-certified to IEC 61508 with certificate of FMEDA data	★
Transient protection		
Standard		**Standard**
T1[35][36]	Transient terminal block	★

Table 1. Rosemount 3051S Scalable Coplanar Pressure Transmitter ordering information

★ The Standard offering represents the most common options. The starred options (★) should be selected for best delivery.
The Expanded offering is subject to additional delivery lead time.

Drinking water approval		
Standard		**Standard**
DW[37]	NSF Drinking Water Approval	★
Surface finish certification		
Standard		**Standard**
Q16	Surface finish certification for sanitary remote seals	★
Toolkit total system performance reports		
Standard		**Standard**
QZ	Remote Seal System Performance Calculation Report	★
Conduit electrical connector		
Standard		**Standard**
GE[38]	M12, 4-pin, Male Connector (eurofast®)	★
GM[38]	A size Mini, 4-pin, Male Connector (minifast®)	★
NACE Certificate		
Standard		**Standard**
Q15[39]	Certificate of Compliance to NACE MR0175/ISO 15156 for wetted materials	★
Q25[39]	Certificate of Compliance to NACE MR0103 for wetted materials	★
Typical model number: 3051S1CD 2A 2 E12 A 1A DA2 B4 M5		

(1) For detailed specifications see "Specifications" on page -81.

(2) This option is only available with range codes 2A and 3A, 316L SST or Alloy C-276 isolating diaphragm and silicone fill fluid.

(3) Performance Class code 3 is available with Measurement Type code D only.

(4) 3051S_CD0 is only available with SST traditional flange, 316L SST diaphragm material, and Bolting option L4.

(5) Materials of Construction comply with metallurgical requirements highlighted within NACE MR0175/ISO 15156 for sour oil field production environments. Environmental limits apply to certain materials. Consult latest standard for details. Selected materials also conform to NACE MR0103 for sour refining environments. Order with Q15 or Q25 to receive a NACE certificate.

(6) Tantalum diaphragm material is only available for ranges 2A - 5A, differential and gage.

(7) "Assemble to" items are specified separately and require a completed model number. Process connection option codes B12, C11, D11, EA2, EA3, and EA5 are only available on differential Measurement Type, code D.

(8) Consult an Emerson Process Management representative for performance specifications.

(9) Not available with Performance Class code 3.

(10) Requires PlantWeb™ housing.

(11) Only intrinsically safe approval codes apply.

(12) Only available with output code X.

(13) Available with output code A only. Available approvals are FM Intrinsically Safe; Nonincendive (option code I5), CSA Intrinsically Safe (option code I6), ATEX Intrinsic Safety (option code I1), or IECEx Intrinsic Safety (option code I7). Contact an Emerson Process Management representative for additional information.

(14) Long-Life Power Module must be shipped separately, order Power Module 701PBKKF.

(15) Not available with output code X.

(16) Requires PlantWeb housing and output code A. Includes Hardware Adjustments as standard.

(17) Requires Rosemount Engineering Assistant to configure.

(18) For process connection option code A11, the mounting bracket must be ordered as part of the manifold model number.

(19) Not available with output code F.

(20) Not available with housing style codes 00, 2E, 2F, 2G, 2M, 5A, 5J, or 7J.

(21) Not available with process connection option code A11.

(22) Requires PlantWeb housing and Hardware Adjustments option code D1. Limited availability depending on transmitter type and range. Contact an Emerson Process Management representative for additional information.

(23) This assembly is included with options E1, N1, K1, ND, E4, E7, N7, K7, E2, E3, KA, KC, KD, IA, IB, IE, IF, IG, KG, and T1.

(24) Transmitter is shipped with 316 SST conduit plug (uninstalled) in place of standard carbon steel conduit plug.

(25) Valid when SuperModule Platform and housing have equivalent approvals.

(26) Not available with M20 or G ½ conduit entry size.

(27) Only available on differential and gage measurement types. Silicone fill fluid is standard.

(28) Bolts are not considered process wetted. In instances where NACE MR0175/ISO 15156 and NACE MR0103 conformance is required for bolting, L7 is the recommended bolting option.

(29) Not available with Housing code 7J.

(30) Not available with output code F, option code DA2, or option code QT.

(31) See the 3051S Reference Manual (document number 00809-0100-4801) for cable requirements. Contact an Emerson Process Management representative for additional information.

(32) P1 is not available with 3051S_CA0.

(33) Requires 316L SST, Alloy C-276, or Gold-plated 316L SST diaphragm material, assemble to Rosemount 305 integral manifold or DIN-compliant traditional flange process connection, and bolting option L8. Limited to Pressure Range (Differential), ranges 2A – 5A.

(34) Not available with output code F or X. Not available with housing code 7J.

(35) Not available with Housing code 00, 5A, 5J, or 7J.

(36) The T1 option is not needed with FISCO Product Certifications; transient protection is included in the FISCO product certification codes IA, IB, IE, IF, IG, and KG.

(37) Requires 316L SST diaphragm material, glass-filled PTFE O-ring (standard), and Process Connection code E12 or F12.

(38) Not available with Housing code 00, 5A, 5J, or 7J. Available with Intrinsically Safe approvals only. For FM Intrinsically Safe; Nonincendive (option code I5) or FM FISCO Intrinsically Safe (option code IE), install in accordance with Rosemount drawing 03151-1009. Suitable for use with all IS approvals (I1, I2, I3, I5, I6, I7, IA, IB, IE, IF, IG).

(39) NACE compliant wetted materials are identified by Footnote 5.

Rosemount 3051S In-Line Pressure Transmitter



3051S In-Line Pressure Transmitter

Rosemount 3051S In-line Pressure Transmitters are the industry leader for Gage and Absolute pressure measurement. The in-line, compact design allows the transmitter to be connected directly to a process for quick, easy and cost effective installation. Capabilities include:

- Ultra and Classic Performance
- 4-20 mA HART, Wireless, FOUNDATION fieldbus protocols
- Safety Certification (Option Code QT)
- Advanced Diagnostics (Option Code DA2)
- Remote Display and Interface (Option Code M7, M8, or M9)

Additional information
Specifications: page 81
Certifications: page 101
Dimensional Drawings: page 113

Table 2. Rosemount 3051S Scalable In-Line Pressure Transmitter ordering information

★ The Standard offering represents the most common options. The starred options (★) should be selected for best delivery.
The Expanded offering is subject to additional delivery lead time.

Model	Transmitter type		
3051S	Scalable Pressure Transmitter		
Performance class[1]			
Standard			**Standard**
1	Ultra: 0.025 percent span accuracy, 200:1 rangedown, 15-yr stability, 15-yr limited warranty		★
2	Classic: 0.035 percent span accuracy, 150:1 rangedown, 15-yr stability		★
Connection type			
Standard			**Standard**
T	In-Line		★
Measurement type			
Standard			**Standard**
G	Gage		★
A	Absolute		★
Pressure range			
	Gage	**Absolute**	
Standard			**Standard**
1A	-14.7 to 30 psi (-1,0 to 2,1 bar)	0 to 30 psia (2,1 bar)	★
2A	-14.7 to 150 psi (-1,0 to 10,3 bar)	0 to 150 psia (10,3 bar)	★
3A	-14.7 to 800 psi (-1,0 to 55 bar)	0 to 800 psia (55 bar)	★
4A	-14.7 to 4000 psi (-1,0 to 276 bar)	0 to 4000 psia (276 bar)	★
5A	-14.7 to 10000 psi (-1,0 to 689 bar)	0 to 10000 psia (689 bar)	★
Isolating diaphragm			
Standard			**Standard**
2[2][3]	316L SST		★
3[2][3]	Alloy C-276		★

Table 2. Rosemount 3051S Scalable In-Line Pressure Transmitter ordering information

★ The Standard offering represents the most common options. The starred options (★) should be selected for best delivery.
The Expanded offering is subject to additional delivery lead time.

Process connection				
Standard				**Standard**
A11[4]	Assemble to Rosemount 306 Integral Manifold			★
B11[4][5]	Assemble to one Rosemount 1199 Seal			★
E11	1/2–14 NPT female			★
G11	G1/2 A DIN 16288 male (Range 1-4 only)			★
Expanded				**Expanded**
F11	Non-threaded instrument flange (I-flange) (Range 1-4 only)			
Transmitter output				
Standard				**Standard**
A	4–20 mA with digital signal based on HART® protocol			★
F[6]	FOUNDATION fieldbus protocol			★
X[7]	Wireless (Requires wireless options and wireless PlantWeb housing)			★
Housing style		**Material**	**Conduit entry size**	
Standard				**Standard**
00	None (SuperModule spare part, order output code A)			★
1A	PlantWeb housing	Aluminum	1/2–14 NPT	★
1B	PlantWeb housing	Aluminum	M20 x 1.5	★
1J	PlantWeb housing	SST	1/2–14 NPT	★
1K	PlantWeb housing	SST	M20 x 1.5	★
5A[8]	Wireless PlantWeb housing	Aluminum	1/2–14 NPT	★
5J[8]	Wireless PlantWeb housing	SST	1/2–14 NPT	★
2A	Junction Box housing	Aluminum	1/2–14 NPT	★
2B	Junction Box housing	Aluminum	M20 x 1.5	★
2J	Junction Box housing	SST	1/2–14 NPT	★
2E	Junction Box housing with output for remote display and interface	Aluminum	1/2–14 NPT	★
2F	Junction Box housing with output for remote display and interface	Aluminum	M20 x 1.5	★
2M	Junction Box housing with output for remote display and interface	SST	1/2–14 NPT	★
7J[9]	Quick Connect (A size Mini, 4-pin male termination)	SST		★
Expanded				**Expanded**
1C	PlantWeb housing	Aluminum	G1/2	
1L	PlantWeb housing	SST	G1/2	
2C	Junction Box housing	Aluminum	G1/2	
2G	Junction Box housing with output for remote display and interface	Aluminum	G1/2	

Wireless options (requires option code X and wireless PlantWeb housing)

Update rate		
Standard		**Standard**
WA	User Configurable Update Rate	★
Operating frequency and protocol		
Standard		**Standard**
3	2.4 GHz DSSS, IEC 62591 (*Wireless*HART)	★
Omnidirectional wireless antenna		
Standard		**Standard**
WK	External Antenna	★
WM	Extended Range, External Antenna	★
Expanded		**Expanded**
WN	High-Gain, Remote Antenna	
SmartPower™		
Standard		**Standard**
1[10]	Adapter for Black Power Module (I.S. Power Module Sold Separately)	★

Table 2. Rosemount 3051S Scalable In-Line Pressure Transmitter ordering information

★ **The Standard offering represents the most common options. The starred options (★) should be selected for best delivery.**
The Expanded offering is subject to additional delivery lead time.

Other options (Include with selected model number)

PlantWeb control functionality		
Standard		**Standard**
A01[11]	FOUNDATION fieldbus Advanced Control Function Block Suite	★
plantweb diagnostic functionality		
Standard		**Standard**
D01[11]	FOUNDATION fieldbus Diagnostics Suite	★
DA2[11][12]	Advanced HART Diagnostics Suite	★
Mounting bracket		
Standard		**Standard**
B4	Bracket, all SST, 2-in. pipe and panel	★
Software configuration		
Standard		**Standard**
C1[13]	Custom software configuration (Requires Configuration Data Sheet)	★
Alarm limit		
Standard		**Standard**
C4[11][13]	NAMUR alarm and saturation levels, high alarm	★
C5[11][13]	NAMUR alarm and saturation levels, low alarm	★
C6[11][13]	Custom alarm and saturation signal levels, high alarm (Requires C1 and Configuration Data Sheet)	★
C7[11][13]	Custom alarm and saturation signal levels, low alarm (Requires C1 and Configuration Data Sheet)	★
C8[11][13]	Low alarm (standard Rosemount alarm and saturation levels)	★
Hardware adjustments		
Standard		**Standard**
D1[11][13][14]	Hardware adjustments (zero, span, alarm, security)	★
Custody transfer		
Standard		**Standard**
D3[15]	Measurement Canada Accuracy Approval	★
Ground screw		
Standard		**Standard**
D4[16]	External ground screw assembly	★
Conduit plug		
Standard		**Standard**
DO[17]	316 SST Conduit Plug	★
Product certifications[18]		
Standard		**Standard**
E1	ATEX Flameproof	★
I1	ATEX Intrinsic Safety	★
IA	ATEX FISCO Intrinsic Safety (FOUNDATION fieldbus protocol only)	★
N1	ATEX Type n	★
K1	ATEX Flameproof, Intrinsic Safety, Type n, Dust	★
ND	ATEX Dust	★
E4	TIIS Flameproof	★
I4[8]	TIIS Intrinsic Safety	★
E5	FM Explosion-proof, Dust Ignition-proof	★
I5	FM Intrinsically Safe; Nonincendive	★
IE	FM FISCO Intrinsically Safe (FOUNDATION fieldbus protocol only)	★
K5	FM Explosion-proof, Dust Ignition-proof, Intrinsically Safe, Division 2	★
E6[19]	CSA Explosion-proof, Dust Ignition-proof, Division 2	★
I6	CSA Intrinsically Safe	★
IF	CSA FISCO Intrinsically Safe (FOUNDATION fieldbus protocol only)	★

Table 2. Rosemount 3051S Scalable In-Line Pressure Transmitter ordering information

★ The Standard offering represents the most common options. The starred options (★) should be selected for best delivery.
The Expanded offering is subject to additional delivery lead time.

K6[19]	CSA Explosion-proof, Dust Ignition-proof, Intrinsically Safe, Division 2	★
E7	IECEx Flameproof, Dust Ignition-proof	★
I7	IECEx Intrinsic Safety	★
IG	IECEx FISCO Intrinsic Safety (FOUNDATION fieldbus protocol only)	★
N7	IECEx Type n	★
K7	IECEx Flameproof, Dust Ignition-proof, Intrinsic Safety, Type n	★
E2	INMETRO Flameproof	★
I2	INMETRO Intrinsic Safety	★
IB	INMETRO FISCO Intrinsic Safety	★
K2	INMETRO Flameproof, Intrinsic Safety	★
E3	China Flameproof	★
I3	China Intrinsic Safety	★
N3	China Type n	★
KA[19]	ATEX and CSA Flameproof, Intrinsically Safe, Division 2	★
KB[19]	FM and CSA Explosion-proof, Dust Ignition-proof, Intrinsically Safe, Division 2	★
KC	FM and ATEX Explosion-proof, Intrinsically Safe, Division 2	★
KD[19]	FM, CSA, and ATEX Explosion-proof, Intrinsically Safe	★
KG	FM, CSA, ATEX and IECEx FISCO Intrinsic Safety	★
Shipboard approvals		
Standard		**Standard**
SBS	American Bureau of Shipping	★
Sensor fill fluid		
Standard		**Standard**
L1[20]	Inert sensor fill fluid	★
Display type[21]		
Standard		**Standard**
M5	PlantWeb LCD display	★
M7[11][22][23]	Remote mount LCD display and interface, PlantWeb housing, no cable, SST bracket	★
M8[11][24]	Remote mount LCD display and interface, PlantWeb housing, 50 ft. (15 m) cable, SST bracket	★
M9[11][24]	Remote mount LCD display and interface, PlantWeb housing, 100 ft. (31 m) cable, SST bracket	★
Pressure testing		
Expanded		**Expanded**
P1	Hydrostatic testing with certificate	
Special cleaning		
Expanded		**Expanded**
P2[24]	Cleaning for special services	
P3[24]	Cleaning for less than 1PPM chlorine/fluorine	
Calibration certification		
Standard		**Standard**
Q4	Calibration certificate	★
QP	Calibration certificate and tamper evident seal	★
Material traceability certification		
Standard		**Standard**
Q8	Material traceability certification per EN 10204 3.1	★
Quality certification for safety		
Standard		**Standard**
QS[11][13]	Prior-use certificate of FMEDA Data	★
QT[25]	Safety-certified to IEC 61508 with certificate of FMEDA data	★

Table 2. Rosemount 3051S Scalable In-Line Pressure Transmitter ordering information

★ The Standard offering represents the most common options. The starred options (★) should be selected for best delivery.

The Expanded offering is subject to additional delivery lead time.

Transient protection		
Standard		**Standard**
T1[26][27]	Transient terminal block	★
Drinking water approval		
Standard		**Standard**
DW[28]	NSF Drinking Water Approval	★
Surface finish certification		
Standard		**Standard**
Q16	Surface finish certification for sanitary remote seals	★
Toolkit total system performance reports		
Standard		**Standard**
QZ	Remote Seal System Performance Calculation Report	★
Conduit electrical connector		
Standard		**Standard**
GE[29]	M12, 4-pin, Male Connector (eurofast)	★
GM[29]	A size Mini, 4-pin, Male Connector (minifast)	★
NACE Certificate		
Standard		**Standard**
Q15[30]	Certificate of Compliance to NACE MR0175/ISO 15156 for wetted materials	★
Q25[30]	Certificate of Compliance to NACE MR0103 for wetted materials	★
Typical model number: 3051S1TG 2A 2 E11 A 1A DA2 B4 M5		

(1) For detailed specifications see "Specifications" on page -81.

(2) Materials of Construction comply with metallurgical requirements highlighted within NACE MR0175/ISO 15156 for sour oil field production environments. Environmental limits apply to certain materials. Consult latest standard for details. Selected materials also conform to NACE MR0103 for sour refining environments. Order with Q15 or Q25 to receive a NACE certificate.

(3) Isolator diaphragm selection will dictate materials of construction for wetted parts.

(4) "Assemble to" items are specified separately and require a completed model number.

(5) Consult an Emerson Process Management representative for performance specifications.

(6) Requires PlantWeb housing.

(7) Only intrinsically safe approval codes apply.

(8) Only available with output code X.

(9) Only available with output code A. Available approvals are FM Intrinsically Safe; Nonincendive (option code I5), CSA Intrinsically Safe (option code I6), ATEX Intrinsic Safety (option code I1), or IECEx Intrinsic Safety (option code I7). Contact an Emerson Process Management representative for additional information.

(10) Long-Life Power Module must be shipped separately, order Power Module 701PBKKF.

(11) Not available with output code X.

(12) Requires PlantWeb housing and output code A. Includes Hardware Adjustments as standard.

(13) Not available with output code F.

(14) Not available with housing style codes 00, 01, 2E, 2F, 2G, 2M, 5A, 5J, or 7J.

(15) Requires PlantWeb housing and Hardware Adjustments option code D1. Limited availability depending on transmitter type and range. Contact an Emerson Process Management representative for additional information.

(16) This assembly is included with options E1, N1, K1, ND, E4, E7, N7, K7, E2, E3, KA, KC, KD, IA, IB, IE, IF, IG, KG, and T1.

(17) Transmitter is shipped with 316 SST conduit plug (uninstalled) in place of standard carbon steel conduit plug.

(18) Valid when SuperModule Platform and housing have equivalent approvals.

(19) Not available with M20 or G ½ conduit entry size.

(20) Silicone fill fluid is standard.

(21) Not available with Housing code 7J.

(22) Not available with output code F, option code DA2, or option code QT.

(23) See the 3051S Reference Manual (document number 00809-0100-4801) for cable requirements. Contact an Emerson Process Management representative for additional information.

(24) Not available with process connection option code A11.

(25) Not available with output code F or X. Not available with housing code 7J.

(26) Not available with Housing code 00, 5A, 5J, or 7J.

(27) The T1 option is not needed with FISCO Product Certifications; transient protection is included in the FISCO product certification codes IA, IB, IE, IF, IG, and KG.

(28) Requires 316L SST diaphragm material and Process Connection code E11 or G11.

(29) Not available with Housing code 00, 5A, 5J, or 7J. Available with Intrinsically Safe approvals only. For FM Intrinsically Safe; Nonincendive (option code I5) or FM FISCO Intrinsically Safe (option code IE), install in accordance with Rosemount drawing 03151-1009. Suitable for use with all IS approvals (I1, I2, I3, I5, I6, I7, IA, IB, IE, IF, IG).

(30) NACE compliant wetted materials are identified by Footnote 2.

Rosemount 3051S MultiVariable Transmitter



3051S MultiVariable Transmitter

The Rosemount 3051S MultiVariable Transmitter delivers unprecedented performance and capabilities by providing superior flow calculations including fully compensated mass or volume, energy, and totalized flow. Specify the level of compensation that best matches the application:

- Gas, natural gas, and steam measurement: Utilize full compensation (differential pressure, line pressure, and temperature measurement)
- Saturated steam: Utilize differential and line pressure, or differential pressure and temperature measurement
- Liquids: Utilize differential pressure and temperature measurement
- Liquids at stable temperatures: Utilize differential pressure measurement
- 4-20 mA HART, *Wireless*HART

Additional information
Specifications: page 81
Certifications: page 108
Dimensional drawings: page 111

Table 3. Rosemount 3051S Scalable MultiVariable Transmitter ordering information

★ The Standard offering represents the most common options. The starred options (★) should be selected for best delivery.
The Expanded offering is subject to additional delivery lead time.

Model	Transmitter type	
3051SMV	Scalable MultiVariable Transmitter	
Performance class[1]		
Standard		**Standard**
3051SMV MultiVariable SuperModule, Measurement Types 1 and 2		
3[2]	Ultra for Flow: 0.04% reading DP accuracy, 200:1 rangedown,10-year stability, 15-year limited warranty	★
5	Classic MV: 0.04% span DP accuracy, 100:1 rangedown, 5-year stability	★
3051SMV Single Variable SuperModule, Measurement Types 3 and 4		
1[3]	Ultra: 0.025% span DP accuracy, 200:1 rangedown, 15-year stability, 15-year limited warranty	★
2	Classic: 0.035% span DP accuracy, 150:1 rangedown, 15-year stability	★
3[2]	Ultra for Flow: 0.04% reading DP accuracy, 200:1 rangedown,15-year stability, 15-year limited warranty	★
MultiVariable type		
Standard		**Standard**
M	Measurement with Fully Compensated Mass and Energy Flow Calculations	★
P	Measurement of Process Variables Only (No Flow Calculations)	★
Measurement type		
Standard		**Standard**
1	Differential Pressure, Static Pressure, and Temperature	★
2	Differential Pressure and Static Pressure	★
3	Differential Pressure and Temperature	★
4	Differential Pressure	★
Differential pressure range		
Standard		**Standard**
0[3][4]	-3 to 3 inH_2O (-7,47 to 7,47 mbar)	★
1	-25 to 25 inH_2O (-62,3 to 62,3 mbar)	★

Table 3. Rosemount 3051S Scalable MultiVariable Transmitter ordering information

★ The Standard offering represents the most common options. The starred options (★) should be selected for best delivery.

The Expanded offering is subject to additional delivery lead time.

2	-250 to 250 inH_2O (-623 to 623 mbar)					★
3	-1000 to 1000 inH_2O (-2,5 to 2,5 bar)					★
4	-150 to 150 psi (-10,3 to 10,3 bar) for Measurement Types 1 & 2; -300 to 300 psi (-20,7 to 20,7 bar) for Types 3 & 4					★
5	-2000 to 2000 psi (-137,9 to 137,9 bar)					★
Static pressure type						
Standard						**Standard**
N[5]	None					★
A	Absolute					★
G	Gage					★
Static pressure range		**Absolute**		**Gage**		
Standard						**Standard**
N[5]	None					★
3	Range 3	0.5 to 800 psia (0,03 to 55,2 bar)		-14.2 to 800 psig (-0,98 to 55,2 bar)		★
4[6]	Range 4	0.5 to 3626 psia (0,03 to 250 bar)		-14.2 to 3626 psig (-0,98 to 250 bar)		★
Temperature input						
Standard						**Standard**
N[7]	None					★
R[8]	RTD Input (Type Pt 100, -328 to 1562 °F (-200 to 850 °C))					★
Isolating diaphragm						
Standard						**Standard**
2[9]	316L SST					★
3[9]	Alloy C-276					★
Expanded						**Expanded**
5[10]	Tantalum					
7[9]	Gold-Plated 316L SST					
Process connection		**Size**	**Material type**			
			Flange material	**Drain vent**	**Bolting**	
Standard						**Standard**
000	None (no process flange)					★
A11[11]	Assemble to Rosemount 305/306 Integral Manifold					★
A12[11]	Assemble to Rosemount 304 or AMF Manifold with SST Traditional Flange					★
A15	Assemble to Rosemount 304 or AMF manifold to SST Traditional Flange with Alloy C-276 Drain Vents					★
A16[11]	Assemble to 304 or AMF Manifold to DIN SST Traditional Flange					★
A22	Assemble AMF manifold to SST Coplanar Flange					★
B11[11][12]	Assemble to one Rosemount 1199 Seal					★
B12[11][12]	Assemble to two Rosemount 1199 Seals					★
C11[11]	Assemble to Rosemount 405C or 405P Primary Element					★
D11[11]	Assemble to Rosemount 1195 Integral Orifice and Rosemount 305 Integral Manifold					★
EA2[11]	Assemble to Rosemount 485 or 405A Annubar™ Primary Element with Coplanar flange		SST	316 SST		★
EA3[11]	Assemble to Rosemount 485 or 405A Annubar Primary Element with Coplanar flange		Cast C-276	Alloy C-276		★
EA5[11]	Assemble to Rosemount 485 or 405A Annubar Primary Element with Coplanar flange		SST	Alloy C-276		★
E11	Coplanar flange	1/4–18 NPT	Carbon Steel	316 SST		★
E12	Coplanar flange	1/4–18 NPT	SST	316 SST		★
E13[9]	Coplanar flange	1/4–18 NPT	Cast C-276	Alloy C-276		★
E14	Coplanar flange	1/4–18 NPT	Cast Alloy 400	Alloy 400/K-500		★

Table 3. Rosemount 3051S Scalable MultiVariable Transmitter ordering information

★ The Standard offering represents the most common options. The starred options (★) should be selected for best delivery.
The Expanded offering is subject to additional delivery lead time.

Standard						**Standard**
E15[9]	Coplanar flange	1/4–18 NPT	SST	Alloy C-276		★
E16[9]	Coplanar flange	1/4–18 NPT	Carbon Steel	Alloy C-276		★
E21	Coplanar flange	RC 1/4	Carbon Steel	316 SST		★
E22	Coplanar flange	RC 1/4	SST	316 SST		★
E23[9]	Coplanar flange	RC 1/4	Cast C-276	Alloy C-276		★
E24	Coplanar flange	RC 1/4	Cast Alloy 400	Alloy 400/K-500		★
E25[9]	Coplanar flange	RC 1/4	SST	Alloy C-276		★
E26[9]	Coplanar flange	RC 1/4	Carbon Steel	Alloy C-276		★
F12	Traditional flange	1/4–18 NPT	SST	316 SST		★
F13[9]	Traditional flange	1/4–18 NPT	Cast C-276	Alloy C-276		★
F14	Traditional flange	1/4–18 NPT	Cast Alloy 400	Alloy 400/K-500		★
F15[9]	Traditional flange	1/4–18 NPT	SST	Alloy C-276		★
F22	Traditional flange	RC 1/4	SST	316 SST		★
F23[9]	Traditional flange	RC 1/4	Cast C-276	Alloy C-276		★
F24	Traditional flange	RC 1/4	Cast Alloy 400	Alloy 400/K-500		★
F25[9]	Traditional flange	RC 1/4	SST	Alloy C-276		★
F52	DIN-compliant traditional flange	1/4–18 NPT	SST	316 SST	7/16-in. bolting	★
G11	Vertical mount level flange	2-in. ANSI class 150	SST			★
G12	Vertical mount level flange	2-in. ANSI class 300	SST			★
G14	Vertical mount level flange	2-in. ANSI class 150	Cast C-276			★
G15	Vertical mount level flange	2-in. ANSI class 300	Cast C-276			★
G21	Vertical mount level flange	3-in. ANSI class 150	SST			★
G22	Vertical mount level flange	3-in. ANSI class 300	SST			★
G31	Vertical mount level flange	DIN- DN 50 PN 40	SST			★
Expanded						**Expanded**
EB6	Assemble to Primary Element with Manifold and Coplanar Flange, CS, Alloy C-276					
F32	Bottom vent traditional flange	1/4–18 NPT	SST	316 SST		
F42	Bottom vent traditional flange	RC 1/4	SST	316 SST		
F62	DIN-compliant traditional flange	1/4–18 NPT	SST	316 SST	M10 bolting	
F72	DIN-compliant traditional flange	1/4–18 NPT	SST	316 SST	M12 bolting	
G41	Vertical mount level flange	DIN- DN 80 PN 40	SST			
Transmitter output						
Standard						**Standard**
A	4–20 mA with digital signal based on HART protocol					★
X[13]	Wireless (requires wireless options and wireless PlantWeb housing)					★
Housing style			**Material**	**Conduit entry size**		
Standard						**Standard**
1A	PlantWeb housing		Aluminum	1/2–14 NPT		★
1B	PlantWeb housing		Aluminum	M20 x 1.5		★
1J	PlantWeb housing		SST	1/2–14 NPT		★
1K	PlantWeb housing		SST	M20 x 1.5		★
5A[14]	Wireless PlantWeb housing		Aluminum	1/2–14 NPT		★
5J[14]	Wireless PlantWeb housing		SST	1/2–14 NPT		★
Expanded						**Expanded**
1C	PlantWeb housing		Aluminum	G1/2		
1L	PlantWeb housing		SST	G1/2		

Table 3. Rosemount 3051S Scalable MultiVariable Transmitter ordering information

★ The Standard offering represents the most common options. The starred options (★) should be selected for best delivery. The Expanded offering is subject to additional delivery lead time.

Wireless options (requires option code X and wireless PlantWeb housing)

Update rate		
Standard		**Standard**
WA	User configurable update rate	★
Operating frequency and protocol		
Standard		**Standard**
3	2.4 GHz DSSS, IEC 62591 (*Wireless*HART)	★
Omni-directional wireless antenna		
Standard		**Standard**
WK	External Antenna	★
WM	Extended Range, External Antenna	★
Expanded		**Expanded**
WN	High-Gain, Remote Antenna	
SmartPower™		
Standard		**Standard**
1[(15)]	Adapter for Black Power Module (I.S. Power Module sold separately)	★

Other options (include with selected model number)

RTD cable (RTD sensor must be ordered separately)		
Standard		**Standard**
C12	RTD Input with 12 ft. (3.66 m) of Shielded Cable	★
C13	RTD Input with 24 ft. (7.32 m) of Shielded Cable	★
C14	RTD Input with 75 ft. (22.86 m) of Shielded Cable	★
Standard		**Standard**
C22	RTD Input with 12 ft. (3.66 m) of Armored Shielded Cable	★
C23	RTD Input with 24 ft. (7.32 m) of Armored Shielded Cable	★
C24	RTD Input with 75 ft. (22.86 m) of Armored Shielded Cable	★
C32	RTD Input with 12 ft. (3.66 m) of ATEX/IECEx Flameproof Cable	★
C33	RTD Input with 24 ft. (7.32 m) of ATEX/IECEx Flameproof Cable	★
C34	RTD Input with 75 ft. (22.86 m) of ATEX/IECEx Flameproof Cable	★
Mounting brackets[(16)]		
Standard		**Standard**
B4	Coplanar flange bracket, all SST, 2-in. pipe and panel	★
B1	Traditional flange bracket, Carbon Steel, 2-in. pipe	★
B2	Traditional flange bracket, Carbon Steel, panel	★
B3	Traditional flange flat bracket, Carbon Steel, 2-in. pipe	★
B7	Traditional flange bracket, B1 with SST bolts	★
B8	Traditional flange bracket, B2 with SST bolts	★
B9	Traditional flange bracket, B3 with SST bolts	★
BA	Traditional flange bracket, B1, all SST	★
BC	Traditional flange bracket, B3, all SST	★
Software configuration		
Standard		**Standard**
C1	Custom software configuration *Note: A Configuration Data Sheet must be completed, see document number 00806-0100-4803.*	★
C2	Custom flow configuration *Note: A Custom Fluid Data Sheet must be completed, see document number 00806-0200-4803.*	★
C4	NAMUR alarm and saturation levels, high alarm	★
C5	NAMUR alarm and saturation levels, low alarm	★
C6	Custom alarm and saturation signal levels, high alarm	★
C7	Custom alarm and saturation signal levels, low alarm	★
C8	Low alarm (standard Rosemount alarm and saturation levels)	★

Table 3. Rosemount 3051S Scalable MultiVariable Transmitter ordering information

★ The Standard offering represents the most common options. The starred options (★) should be selected for best delivery.
The Expanded offering is subject to additional delivery lead time.

Flange adapter		
Standard		**Standard**
D2[17]	1/2-14 NPT flange adapter	★
Expanded		
D9[17]	RC 1/2 SST flange adapter	
Ground screw		
Standard		**Standard**
D4[18]	External ground screw assembly	★
Drain/vent valve		
Standard		**Standard**
D5[17]	Delete transmitter drain/vent valves (install plugs)	★
Expanded		**Expanded**
D7[17]	Coplanar flange without drain/vent ports	
Conduit plug		
Standard		**Standard**
DO[19]	316 SST Conduit Plug	★
Product certifications		
Standard		**Standard**
E1	ATEX Flameproof	★
I1	ATEX Intrinsic Safety	★
N1	ATEX Type n	★
ND	ATEX Dust	★
K1	ATEX Flameproof, Intrinsic Safety, Type n, Dust (combination of E1, I1, N1, and ND)	★
E4	TIIS Flameproof	★
E5	FM Explosion-proof, Dust Ignition-proof	★
I5	FM Intrinsically Safe; Nonincendive	★
K5	FM Explosion-proof, Dust Ignition-proof, Intrinsically Safe, Division 2 (combination of E5 and I5)	★
E6[20]	CSA Explosion-proof, Dust Ignition-proof, Division 2	★
I6	CSA Intrinsically Safe	★
K6[20]	CSA Explosion-proof, Dust Ignition-proof, Intrinsically Safe, Division 2 (combination of E6 and I6)	★
E7	IECEx Flameproof, Dust Ignition-proof	★
I7	IECEx Intrinsic Safety	★
N7	IECEx Type n	★
K7	IECEx Flameproof, Dust Ignition-proof, Intrinsic Safety, and Type n (combination of E7, I7, and N7)	★
E2	INMETRO Flameproof	★
I2	INMETRO Intrinsic Safety	★
E3	China Flameproof	★
I3	China Intrinsic Safety	★
KA[20][21]	ATEX and CSA Explosion-proof, Intrinsically Safe, Division 2 (combination of E1, E6, I1, and I6)	★
KB[20][21]	FM and CSA Explosion-proof, Dust Ignition-proof, Intrinsically Safe, Division 2 (combination of E5, E6, I5, and I6)	★
KC[21]	FM and ATEX Explosion-proof, Intrinsically Safe, Division 2 (combination of E5, E1, I5, and I1)	★
KD[20][21]	FM, CSA, and ATEX Explosion-proof, Intrinsically Safe (combination of E5, E6, E1, I5, I6, and I1)	★
Drinking water approval		
Standard		**Standard**
DW[22]	NSF Drinking Water Certification	★
Shipboard approvals		
Standard		**Standard**
SBS	American Bureau of Shipping	★
Alternate materials of construction		
Standard		**Standard**
L1	Inert sensor fill fluid (Differential and Gage sensors only) *Note: Silicone fill fluid is standard.*	★
L2	Graphite-filled PTFE O-ring	★

Table 3. Rosemount 3051S Scalable MultiVariable Transmitter ordering information

★ The Standard offering represents the most common options. The starred options (★) should be selected for best delivery.
The Expanded offering is subject to additional delivery lead time.

L4[17]	Austenitic 316 SST bolts	★
L5[17]	ASTM A193, Grade B7M bolts	★
L6[17]	Alloy K-500 bolts	★
L7[17][23]	ASTM A453, Class D, Grade 660 bolts	★
L8[17]	ASTM A193, Class 2, Grade B8M bolts	★
Digital display		
Standard		**Standard**
M5	PlantWeb LCD display	★
Special procedures		
Standard		**Standard**
P1[24]	Hydrostatic testing with certificate	★
P9[3]	4500 psig (310 bar) static pressure limit	★
P0[3][25]	6092 psig (420 bar) static pressure limit	★
Expanded		**Expanded**
P2[17]	Cleaning for special services	
P3[17]	Cleaning for less than 1PPM chlorine/fluorine	
Special certifications		
Standard		**Standard**
Q4	Calibration Certificate	★
QP	Calibration Certificate and Tamper Evident Seal	★
Q8	Material Traceability Certification per EN 10204 3.1B	★
Q16	Surface Finish Certification for Sanitary Remote Seals	★
QZ	Remote Seal System Performance Calculation Report	★
Transient protection		
Standard		**Standard**
T1	Transient terminal block	★
Conduit electrical connector		
Standard		**Standard**
GE[26]	M12, 4-pin, Male Connector (eurofast)	★
GM[26]	A size Mini, 4-pin, Male Connector (minifast)	★
NACE Certificate		
Standard		**Standard**
Q15[27]	Certificate of Compliance to NACE MR0175/ISO 15156 for wetted materials	★
Q25[27]	Certificate of Compliance to NACE MR0103 for wetted materials	★
Cold temperature		
Standard		**Standard**
BRR	-58 °F (-50 °C) Cold Temperature Start-up	★
Typical model number: 3051SMV 3 M 1 2 G 4 R 2 E12 A 1A B4 C2 M5		

(1) For detailed specifications see "Specifications" on page -81.

(2) For Measurement Types 1 & 2, only available with DP range codes 2, 3, and 4, 316L SST and Alloy C-276 isolating diaphragm and silicone fill fluid. For Measurements Types 3 & 4, only available with DP range codes 2 and 3, 316L SST and Alloy C-276 isolating diaphragm and silicone fill fluid.

(3) Only available with Measurement Type codes 3 and 4.

(4) DP Range 0 is only available with traditional flange, 316L SST diaphragm material, and Bolting option L4.

(5) Required for Measurement Type codes 3 and 4.

(6) For Measurement Type codes 1 and 2 with DP range 1, absolute limits are 0.5 to 2000 psi (0,03 to 137,9 bar) and gage limits are -14.2 to 2000 psig (-0,98 to 137,9 bar).

(7) Required for Measurement Type codes 2 and 4.

(8) Required for Measurement Type codes 1 and 3. RTD Sensor must be ordered separately.

(9) Materials of Construction comply with metallurgical requirements highlighted within NACE MR0175/ISO 15156 for sour oil field production environments Environmental limits apply to certain materials. Consult latest standard for details. Selected materials also conform to NACE MR0103 for sour refining environments. Order with Q15 or Q25 to receive a NACE certificate.

(10) Tantalum diaphragm material is only available for DP ranges 2-5.

(11) "Assemble to" items are specified separately and require a completed model number.

(12) Consult an Emerson Process Management representative for performance specifications.

(13) Only available with Measurement Type 2 and MultiVariable Type P.

(14) Only available with output code X.

(15) Long-Life Power Module must be shipped separately, order Power Module 701PBKKF.

(16) For process connection option code A11, the mounting bracket must be ordered as part of the manifold model number.

(17) Not available with process connection option code A11.

(18) This assembly is included with certification options E1, N1, K1, ND, E4, E7, N7, K7, E2, E3, KA, KC, and KD.

(19) Transmitter is shipped with 316 SST conduit plug (uninstalled) in place of standard carbon steel conduit plug.

(20) Not available with M20 or G ½ conduit entry size.

(21) RTD cable not available with this option.

(22) Requires 316L SST diaphragm material, glass-filled PTFE O-ring (standard), and Process Connection code E12 or F12.

(23) Bolts are not considered process wetted. In instances where NACE MR0175/ISO 15156 and NACE MR0103 conformance is required for bolting, L7 is the recommended bolting option.

(24) Not available with DP range 0.

(25) Requires 316L SST or Alloy C-276 diaphragm material, assemble to Rosemount 305 Integral Manifold or DIN-compliant traditional flange process connection, and bolting option L8. Limited to differential pressure ranges 2-5.

(26) Available with Intrinsically Safe approvals only. For FM Intrinsically Safe; Nonincendive approval (option code I5), install in accordance with Rosemount drawing 03151-1009.

(27) NACE compliant wetted materials are identified by Footnote 9.

Rosemount 3051SF DP Flowmeters



Rosemount 3051SF Flowmeters integrate the 3051S with industry leading primary elements. Capabilities include:

- Flowmeters are factory configured to meet your application needs (Configuration Data Sheet required)
- MultiVariable capabilities allow scalable flow compensation (Measurement Types 1-7)
- 4-20 mA HART, Wireless, and FOUNDATION fieldbus protocols
- Ultra for Flow for improved flow performance across wider flow ranges
- Integral temperature measurement (Option Code T)
- Advanced Diagnostics (Option Code DA2)
- Direct or remote mount configurations available

Additional information
Specifications: page 81
Dimensional drawings: page 118



Rosemount 3051SFA Annubar Flowmeter

- Annubar flowmeters reduce permanent pressure loss by creating less blockage in the pipe
- Ideal for large line size installations when cost, size and weight of the flowmeter are concerns

Table 4. Rosemount 3051SFA Annubar Flowmeter ordering information

★ The Standard offering represents the most common options. The starred options (★) should be selected for best delivery.
The Expanded offering is subject to additional delivery lead time.

Model	Product description	Measurement type		• = Available — = Unavailable
		D	1-7	
3051SFA	Annubar Flowmeter	•	•	
Measurement type				
Standard				**Standard**
1	Fully Compensated Mass & Energy Flow Calculations – Differential & Static Pressures w/ Temperature	—	•	★
2	Compensated Flow Calculations – Differential & Static Pressures	—	•	★
3	Compensated Flow Calculations – Differential Pressure & Temperature	—	•	★
4	Compensated Flow Calculations – Differential Pressure	—	•	★
D	Differential Pressure	•	—	★
Expanded				**Expanded**
5	Process Variables Only (No Flow Calculations) – Differential & Static Pressures w/ Temperature	—	•	
6	Process Variables Only (No Flow Calculations) – Differential & Static Pressures	—	•	
7	Process Variables Only (No Flow Calculations) – Differential Pressure & Temperature	—	•	
Fluid type				
Standard				**Standard**
L	Liquid	•	•	★

Table 4. Rosemount 3051SFA Annubar Flowmeter ordering information

★ The Standard offering represents the most common options. The starred options (★) should be selected for best delivery.
The Expanded offering is subject to additional delivery lead time.

G	Gas	•	•	★
S	Steam	•	•	★
Line size		**D**	**1-7**	
Standard				**Standard**
020	2-in. (50 mm)	•	•	★
025	2 1/2-in. (63.5 mm)	•	•	★
030	3-in. (80 mm)	•	•	★
035	3 1/2-in. (89 mm)	•	•	★
040	4-in. (100 mm)	•	•	★
050	5-in. (125 mm)	•	•	★
060	6-in. (150 mm)	•	•	★
070	7-in. (175 mm)	•	•	★
080	8-in. (200 mm)	•	•	★
100	10-in. (250 mm)	•	•	★
120	12-in. (300 mm)	•	•	★
Expanded				**Expanded**
140	14-in. (350 mm)	•	•	
160	16-in. (400 mm)	•	•	
180	18-in. (450 mm)	•	•	
200	20-in. (500 mm)	•	•	
240	24-in. (600 mm)	•	•	
300	30-in. (750 mm)	•	•	
360	36-in. (900 mm)	•	•	
420	42-in. (1066 mm)	•	•	
480	48-in. (1210 mm)	•	•	
600	60-in. (1520 mm)	•	•	
720	72-in. (1820 mm)	•	•	
780	78-in. (1950 mm)	•	•	
840	84-in. (2100 mm)	•	•	
900	90-in. (2250 mm)	•	•	
960	96-in. (2400 mm)	•	•	
Pipe I.D. range				
Standard				**Standard**
C	Range C from the Pipe I.D. table	•	•	★
D	Range D from the Pipe I.D. table	•	•	★
Expanded				**Expanded**
A	Range A from the Pipe I.D. table	•	•	
B	Range B from the Pipe I.D. table	•	•	
E	Range E from the Pipe I.D. table	•	•	
Z	Non-standard Pipe I.D. Range or line sizes greater than 12-in. (300 mm)	•	•	
Pipe material / mounting assembly material				
Standard				**Standard**
C	Carbon steel (A105)	•	•	★
S	316 Stainless Steel	•	•	★
0[(1)]	No Mounting (Customer Supplied)	•	•	★
Expanded				**Expanded**
G	Chrome-Moly Grade F-11	•	•	
N	Chrome-Moly Grade F-22	•	•	
J	Chrome-Moly Grade F-91	•	•	
Piping orientation				
Standard				**Standard**
H	Horizontal Piping	•	•	★

Table 4. Rosemount 3051SFA Annubar Flowmeter ordering information

★ The Standard offering represents the most common options. The starred options (★) should be selected for best delivery.
The Expanded offering is subject to additional delivery lead time.

D	Vertical Piping with Downwards Flow			•	•	★
U	Vertical Piping with Upwards Flow			•	•	★
Annubar type				**D**	**1-7**	
Standard						**Standard**
P	Pak-Lok			•	•	★
F	Flanged with opposite side support			•	•	★
Expanded						**Expanded**
L	Flange-Lok			•	•	
G	Gear-Drive Flo-Tap			•	•	
M	Manual Flo-Tap			•	•	
Sensor material						
Standard						**Standard**
S	316 Stainless Steel			•	•	★
Expanded						**Expanded**
H	Alloy C-276			•	•	
Sensor size						
Standard						**Standard**
1	Sensor size 1 — Line sizes 2-in. (50 mm) to 8-in. (200 mm)			•	•	★
2	Sensor size 2 — Line sizes 6-in. (150 mm) to 96-in. (2400 mm)			•	•	★
3	Sensor size 3 — Line sizes greater than 12-in. (300 mm)			•	•	★
Mounting type						
Standard						**Standard**
T1	Compression/Threaded Connection			•	•	★
A1	150# RF ANSI			•	•	★
A3	300# RF ANSI			•	•	★
A6	600# RF ANSI			•	•	★
D1	DN PN16 Flange			•	•	★
D3	DN PN40 Flange			•	•	★
D6	DN PN100 Flange			•	•	★
Expanded						**Expanded**
A9[(2)]	900# RF ANSI			•	•	
AF[(2)]	1500# RF ANSI			•	•	
AT[(2)]	2500 # RF ANSI			•	•	
R1	150# RTJ Flange			•	•	
R3	300# RTJ Flange			•	•	
R6	600# RTJ Flange			•	•	
R9[(2)]	900# RTJ Flange			•	•	
RF[(2)]	1500# RTJ Flange			•	•	
RT[(2)]	2500# RTJ Flange			•	•	
Opposite side support or packing gland						
Standard						**Standard**
0	No opposite side support or packing gland (Required for Pak-Lok and Flange-Lok models)			•	•	★
	Opposite Side Support – Required for Flanged Models					
C	NPT Threaded Opposite Support Assembly – Extended Tip			•	•	★
D	Welded Opposite Support Assembly – Extended Tip			•	•	★
Expanded						**Expanded**
	Packing Gland – Required for Flo-Tap Models					
	Packing gland material	**Rod material**	**Packing material**			
J[(3)]	Stainless Steel Packing Gland / Cage Nipple	Carbon Steel	PTFE	•	•	
K[(3)]	Stainless Steel Packing Gland / Cage Nipple	Stainless Steel	PTFE	•	•	
L[(3)]	Stainless Steel Packing Gland / Cage Nipple	Carbon Steel	Graphite	•	•	

Table 4. Rosemount 3051SFA Annubar Flowmeter ordering information

★ The Standard offering represents the most common options. The starred options (★) should be selected for best delivery.

The Expanded offering is subject to additional delivery lead time.

N[3]	Stainless Steel Packing Gland / Cage Nipple	Stainless Steel	Graphite	•	•	
R	Alloy C-276 Packing Gland / Cage Nipple	Stainless Steel	Graphite	•	•	
Isolation valve for Flo-Tap Models				**D**	**1-7**	
Standard						**Standard**
0[1]	Not Applicable or Customer Supplied			•	•	★
Expanded						**Expanded**
1	Gate Valve, Carbon Steel			•	•	
2	Gate Valve, Stainless Steel			•	•	
5	Ball Valve, Carbon Steel			•	•	
6	Ball Valve, Stainless Steel			•	•	
Temperature measurement						
Standard						**Standard**
T[4]	Integral RTD – not available with Flanged model greater than class 600#			•	•	★
0[5]	No Temperature Sensor			•	•	★
Expanded						**Expanded**
R[4]	Remote Thermowell and RTD			•	•	
Transmitter connection platform						
Standard						**Standard**
3	Direct-mount, Integral 3-valve Manifold– not available with Flanged model greater than class 600			•	•	★
5	Direct -mount, 5-valve Manifold – not available with Flanged model greater than class 600			•	•	★
7	Remote-mount NPT Connections ($^1/_2$-in. FNPT)			•	•	★
Expanded						**Expanded**
6	Direct-mount, High Temperature 5-valve Manifold – not available with Flanged model greater than class 600			•	•	
8	Remote-mount SW Connections ($^1/_2$-in.)			•	•	
Differential pressure range						
Standard						**Standard**
1	0 to 25 in H_2O (0 to 62.3 mbar)			•	•	★
2	0 to 250 in H_2O (0 to 623 mbar)			•	•	★
3	0 to 1000 in H_2O (0 to 2.5 bar)			•	•	★
Static pressure range						
Standard						**Standard**
A[6]	None			•	•	★
D	Absolute 0 to 800 psia (0 to 55.2 bar)			—	•	★
E[7]	Absolute 0 to 3626 psia (0 to 250 bar)			—	•	★
J	Gage -14.2 to 800 psig (-0.979 to 55.2 bar)			—	•	★
K[7]	Gage -14.2 to 3626 psig (-0.979 to 250 bar)			—	•	★
Transmitter Output						
Standard						**Standard**
A	4–20 mA with digital signal based on HART protocol			•	•	★
F	FOUNDATION fieldbus protocol (requires PlantWeb housing)			•	—	★
X[8][9]	Wireless (Requires wireless options and Wireless PlantWeb housing)			•	—	★
Transmitter housing style		**Material**	**Conduit entry size**			
Standard						**Standard**
00	None (Customer-supplied electrical connection)			•	—	★
1A	PlantWeb housing	Aluminum	$^1/_2$-14 NPT	•	•	★
1B	PlantWeb housing	Aluminum	M20 x 1.5	•	•	★
1J	PlantWeb housing	SST	$^1/_2$-14 NPT	•	•	★
1K	PlantWeb housing	SST	M20 x 1.5	•	•	★
2A	Junction Box housing	Aluminum	$^1/_2$-14 NPT	•	—	★

Table 4. Rosemount 3051SFA Annubar Flowmeter ordering information

★ The Standard offering represents the most common options. The starred options (★) should be selected for best delivery.

The Expanded offering is subject to additional delivery lead time.

2B	Junction Box housing	Aluminum	M20 x 1.5	•	—	★
2E	Junction Box housing with output for remote display and interface	Aluminum	1/2-14 NPT	•	—	★
2F	Junction Box housing with output for remote display and interface	Aluminum	M20 x 1.5	•	—	★
2J	Junction Box housing	SST	1/2-14 NPT	•	—	★
2M	Junction Box housing with output for remote display and interface	SST	1/2-14 NPT	•	—	★
5A[10]	Wireless PlantWeb housing	Aluminum	1/2-14 NPT	•	—	★
5J[10]	Wireless PlantWeb housing	SST	1/2-14 NPT	•	—	★
7J[8][11]	Quick Connect (A size Mini, 4-pin male termination)			•	—	★
Expanded						**Expanded**
1C	PlantWeb housing	Aluminum	G1/2	•	•	
1L	PlantWeb housing	SST	G1/2	•	•	
2C	Junction Box housing	Aluminum	G1/2	•	—	
2G	Junction Box housing with output for remote display and interface	Aluminum	G1/2	•	—	
Performance class[12]				**D**	**1-7**	
Standard						**Standard**
3051S MultiVariable SuperModule, Measurement Types 1, 2, 5, and 6						
3	Ultra for Flow: 0.8% flow rate accuracy, 14:1 flow turndown, 10-year stability, 15-year limited warranty			•	•	★
5	Classic MV: 1.15% flow rate accuracy, 8:1 flow turndown, 5-yr. stability			—	•	★
3051S Single Variable SuperModule, Measurement Types 3, 4, 7, and D						
1	Ultra: up to 0.95% flow rate accuracy, 8:1 flow turndown, 15-year stability, 15-year limited warranty			•	—	★
2	Classic: up to 1.4% flow rate accuracy, 8:1 flow turndown, 15-year stability			•	—	★
3[13]	Ultra for Flow: 0.8% flow rate accuracy, 14:1 flow turndown, 15-year stability, 15-year limited warranty			•	•	★

Wireless options (requires option code X and wireless PlantWeb housing)

Update rate, operating frequency and protocol	**D**	**1-7**	
Standard			**Standard**
WA	User Configurable Update Rate	•	—	★
Operating frequency and protocol			
Standard			**Standard**
3	2.4 GHz DSSS, IEC 62591 (*Wireless*HART)	•	—	★
Omnidirectional wireless antenna			
Standard			**Standard**
WK	External Antenna	•	—	★
WM	Extended Range, External Antenna	•	—	★
Expanded			**Expanded**
WN	High-Gain, Remote Antenna	•	—	
SmartPower™ Adapter			
Standard			**Standard**
1[14]	Adapter for Black Power Module (I.S. Power Module Sold Separately)	•	—	★

Other options (include with selected model number)

Pressure testing	**D**	**1-7**	
Expanded			**Expanded**
P1[15]	Hydrostatic Testing with Certificate	•	•	
PX[15]	Extended Hydrostatic Testing	•	•	

Table 4. Rosemount 3051SFA Annubar Flowmeter ordering information

★ The Standard offering represents the most common options. The starred options (★) should be selected for best delivery.
The Expanded offering is subject to additional delivery lead time.

Special cleaning		**D**	**1-7**	
Expanded				**Expanded**
P2	Cleaning for Special Services	•	•	
PA	Cleaning per ASTM G93 level D (section 11.4)	•	•	
Material testing				
Expanded				**Expanded**
V1	Dye Penetrant Exam	•	•	
Material examination				
Expanded				**Expanded**
V2	Radiographic Examination	•	•	
Flow calibration				
Expanded				**Expanded**
W1	Flow Calibration (Average K)	•	•	
WZ	Special Calibration	•	•	
Special inspection				
Standard				**Standard**
QC1	Visual & Dimensional Inspection with Certificate	•	•	★
QC7	Inspection & Performance Certificate	•	•	★
Surface finish				
Standard				**Standard**
RL	Surface finish for Low Pipe Reynolds Number in Gas & Steam	•	•	★
RH	Surface finish for High Pipe Reynolds Number in Liquid	•	•	★
Material traceability certification				
Standard				**Standard**
Q8[16]	Material Traceability Certificate per EN 10204:2004 3.1	•	•	★
Code conformance				
Expanded				**Expanded**
J2[17]	ANSI / ASME B31.1	•	•	
J3[17]	ANSI / ASME B31.3	•	•	
Material conformance				
Expanded				**Expanded**
J5[18]	NACE MR-0175 / ISO 15156	•	•	
Country certification				
Standard				**Standard**
J6	European Pressure Directive (PED)	•	•	★
Expanded				**Expanded**
J1	Canadian Registration	•	•	
Installed in flanged pipe spool section				
Expanded				**Expanded**
H3	150# Flanged Connection with Rosemount Standard Length and Schedule	•	•	
H4	300# Flanged Connection with Rosemount Standard Length and Schedule	•	•	
H5	600# Flanged Connection with Rosemount Standard Length and Schedule	•	•	
Instrument connections for remote mount option				
Standard				**Standard**
G2	Needle Valves, Stainless Steel	•	•	★
G6	OS&Y Gate Valve, Stainless Steel	•	•	★

Table 4. Rosemount 3051SFA Annubar Flowmeter ordering information

★ The Standard offering represents the most common options. The starred options (★) should be selected for best delivery.
The Expanded offering is subject to additional delivery lead time.

Expanded				**Expanded**
G1	Needle Valves, Carbon Steel	•	•	
G3	Needle Valves, Alloy C-276	•	•	
G5	OS&Y Gate Valve, Carbon Steel	•	•	
G7	OS&Y Gate Valve, Alloy C-276	•	•	
Special shipment		**D**	**1-7**	
Standard				**Standard**
Y1	Mounting Hardware Shipped Separately	•	•	★
Attach to				
Expanded				**Expanded**
H1	Attach to Transmitter	•	•	
Special dimensions				
Expanded				**Expanded**
VM	Variable Mounting	•	•	
VT	Variable Tip	•	•	
VS	Variable length Spool Section	•	•	
Transmitter calibration certification				
Standard				**Standard**
Q4	Calibration Certificate for Transmitter	•	•	★
QP	Calibration Certificate & Tamper Evident Seal	•	•	★
Quality certification for safety				
Standard				**Standard**
QS[(21)(27)]	Prior-use Certificate of FMEDA data	•	—	★
QT[(20)(21)(27)]	Safety certified to IEC 61508 with certificate of FMEDA data	•	—	★
Product certifications				
Standard				**Standard**
E1	ATEX Flameproof	•	•	★
I1	ATEX Intrinsic Safety	•	•	★
IA	ATEX FISCO Intrinsic Safety; for FOUNDATION fieldbus protocol only	•	—	★
N1	ATEX Type n	•	•	★
ND	ATEX Dust	•	•	★
K1	ATEX Flameproof, Intrinsic Safety, Type n, Dust (combination of E1, I1, N1, and ND)	•	•	★
E4	TIIS Flameproof	•	•	★
E5	FM Explosion-proof, Dust Ignition-proof	•	•	★
I5	FM Intrinsically Safe; Nonincendive	•	•	★
K5	FM Explosion-proof, Dust Ignition-proof, Intrinsically Safe, Division 2 (combination of E5 and I5)	•	•	★
E6[(19)]	CSA Explosion-proof, Dust Ignition-proof, Division 2	•	•	★
I6	CSA Intrinsically Safe	•	•	★
K6[(19)]	CSA Explosion-proof, Dust Ignition-proof, Intrinsically Safe, Division 2 (combination of E6 and I6)	•	•	★
E7	IECEx Flameproof, Dust Ignition-proof	•	•	★
I7	IECEx Intrinsic Safety	•	•	★
K7	IECEx Flameproof, Dust Ignition-proof, Intrinsic Safety, Type n (combination of E7, I7, and N7)	•	•	★
E3	China Flameproof	•	•	★
I3	China Intrinsic Safety	•	•	★
KA[(19)]	ATEX and CSA Explosion-proof, Intrinsically Safe, Division 2 (combination of E1, I1, E6, and I6)	•	•	★
Expanded				**Expanded**
KB[(19)]	FM and CSA Explosion-proof, Dust Ignition-proof, Intrinsically Safe, Division 2 (combination of E5, E6, I5, and I6)	•	•	
KC	FM and ATEX Explosion-proof, Intrinsically Safe, Division 2 (combination of E5, E1, I5, and I1)	•	•	
KD[(19)]	FM, CSA, and ATEX Explosion-proof, Intrinsically Safe (combination of E5, I5, E6, I6, E1, and I1)	•	•	

Table 4. Rosemount 3051SFA Annubar Flowmeter ordering information

★ The Standard offering represents the most common options. The starred options (★) should be selected for best delivery.
The Expanded offering is subject to additional delivery lead time.

Shipboard approvals		**D**	**1-7**	
Standard				**Standard**
SBS	American Bureau of Shipping	•	•	★
Sensor fill fluid and o-ring options				
Standard				**Standard**
L1	Inert Sensor Fill Fluid	•	•	★
L2	Graphite-Filled (PTFE) O-ring	•	•	★
LA	Inert Sensor Fill Fluid and Graphite-Filled (PTFE) O-ring	•	•	★
Digital display[(20)]				
Standard				**Standard**
M5	PlantWeb LCD display (requires PlantWeb housing)	•	•	★
M7[(21)(22)(23)]	Remote mount LCD display and interface, PlantWeb housing, no cable; SST bracket	•	N/A	★
M8[(21)(22)]	Remote mount LCD display and interface, PlantWeb housing, 50 ft. (15 m) cable; SST bracket	•	N/A	★
M9[(21)(22)]	Remote mount LCD display and interface, PlantWeb housing, 100 ft. (31 m) cable; SST bracket	•	N/A	★
Transient protection				
Standard				**Standard**
T1[(24)]	Transient terminal block	•	•	★
Manifold for remote mount option				
Standard				**Standard**
F2	3-Valve Manifold, Stainless Steel	•	•	★
F6	5-Valve Manifold, Stainless Steel	•	•	★
Expanded				**Expanded**
F1	3-Valve Manifold, Carbon Steel	•	•	
F3	3-Valve Manifold, Alloy C-276	•	•	
F5	5-Valve Manifold, Carbon Steel	•	•	
F7	5-Valve Manifold, Alloy C-276	•	•	
PlantWeb control functionality				
Standard				**Standard**
A01	FOUNDATION fieldbus Advanced Control Function Block Suite	•	—	★
PlantWeb diagnostic functionality				
Standard				**Standard**
D01	FOUNDATION fieldbus Diagnostics Suite	•	—	★
DA2[(25)]	Advanced HART Diagnostic Suite	•	—	★
PlantWeb enhanced measurement functionality				
Standard				**Standard**
H01[(26)]	FOUNDATION fieldbus Fully Compensated Mass Flow Block	•	—	★
Cold temperature				
Standard				**Standard**
BRR	-58 °F (-50 °C) Cold Temperature Start-up	—	•	★
Alarm limit[(21)(27)]				
Standard				**Standard**
C4	NAMUR Alarm & Saturation Levels, High Alarm	•	•	★
C5	NAMUR Alarm & Saturation Levels, Low Alarm	•	•	★
C6	Custom Alarm & Saturation Levels, High Alarm	•	•	★
C7	Custom Alarm & Saturation Levels, Low Alarm	•	•	★
C8	Low Alarm (Standard Rosemount Alarm & Saturation Levels)	•	•	★

Table 4. Rosemount 3051SFA Annubar Flowmeter ordering information

★ The Standard offering represents the most common options. The starred options (★) should be selected for best delivery.

The Expanded offering is subject to additional delivery lead time.

Hardware adjustments and ground screw		**D**	**1-7**	
Standard				**Standard**
D1[21][27][28]	Hardware Adjustments (zero, span, alarm, security)	•	—	★
D4[29]	External Ground Screw Assembly	•	•	★
DA[21][27][28]	Hardware Adjustments (zero, span, alarm, security) & External Ground Screw Assembly	•	—	★
Conduit plug				
Standard				**Standard**
DO	316 SST Conduit Plug *(standard for all 3051SF Models)*	•	•	★
Conduit electrical connector				
Standard				**Standard**
GE[30]	M12, 4-pin, Male Connector (*eurofast*)	•	•	★
GM[30]	A size Mini, 4-pin, Male Connector (*minifast*)	•	•	★
Typical model number: 3051SFA D L 060 D C H P S 2 T1 0 0 0 3 2A A 1A 3				

(1) Provide the “A” dimension for Flanged, Flange-Lok, and Threaded Flo-Tap models. Provide the “B” dimension for Flange Flo-Tap models.

(2) Available in remote mount applications only.

(3) The cage nipple is constructed of 304SST.

(4) Temperature Measurement Option code T or R is required for Measurement Type codes 1, 3, 5, and 7.

(5) Required for Measurement Type codes 2, 4, 6, and D.

(6) Required for Measurement Type codes 3, 4, 7, and D.

(7) For Measurement Type codes 1, 2, 5, and 6 with DP range 1, absolute limits are 0.5 to 2000 psi (0,03 to 137,9 bar) and gage limits are -14.2 to 2000 psig (-0,98 to 137,9 bar).

(8) Only intrinsically safe approval codes apply.

(9) Only available with Measurement Types D and 6.

(10) Only available with output code X.

(11) Only available with output code A.

(12) For detailed specifications see “Specifications” on page -81.

(13) Only available with differential pressure ranges 2 and 3, and silicone fill fluid.

(14) Long-life Power Module must be shipped separately, order Power Module 701PBKKF.

(15) Applies to assembled flowmeter only, mounting not tested.

(16) Instrument Connections for Remote Mount Options and Isolation Valves for Flo-tap Models are not included in the Material Traceability Certification.

(17) Not available with Transmitter Connection Platform 6.

(18) Materials of Construction comply with metallurgical requirements within NACE MR0175/ISO 15156 for sour oil field production environments. Environmental limits apply to certain materials. Consult latest standard for details. Selected materials also conform to NACE MR0103 for sour refining environments.

(19) Not available with M20 or G ½ conduit entry size.

(20) Not available with housing code 7J.

(21) Not available with output code X.

(22) Not available with output code F, option code DA2, or option code QT.

(23) See the 3051S Reference Manual (document number 00809-0100-4801) for cable requirements. Contact an Emerson Process Management representative for additional information.

(24) Not available with Housing code 5A, 5J, or 7J. External ground screw assembly (option code D4) is included with the T1 option. The T1 option is not needed with FISCO Product Certifications.

(25) Includes Hardware Adjustments (option code D1) as standard. Not available with output code X.

(26) Requires Rosemount Engineering Assistant version 5.5.1 to configure.

(27) Not available with output code F.

(28) Not available with housing codes 2E, 2F, 2G, 2M, 5A, 5J, or 7J.

(29) This assembly is included with options E1, N1, K1, ND, E4, E7, N7, K7, E2, E3, KA, KC, KD, IA, IE, N3, and T1.

(30) Not available with Housing code 5A, 5J, or 7J. Available with Intrinsically Safe approvals only. For FM Intrinsically Safe; Nonincendive (option code I5) or FM FISCO Intrinsically Safe (option code IE), install in accordance with Rosemount drawing 03151-1009.



Rosemount 3051SFC Compact Orifice Flowmeter

- Compact conditioning flowmeters reduce straight piping requirements to 2D upstream and 2D downstream from a flow disturbance
- Simple installation of compact flowmeters between any existing raised-face flanges

Table 5. Rosemount 3051SFC Compact Orifice Flowmeter ordering information

★ The Standard offering represents the most common options. The starred options (★) should be selected for best delivery.
The Expanded offering is subject to additional delivery lead time.

Model	Product description	Measurement type		• = Available — = Unavailable
		D	1-7	
3051SFC	Compact Orifice Flowmeter	•	•	
Measurement type				
Standard				**Standard**
1	Fully Compensated Mass & Energy Flow Calculations – Differential & Static Pressures w/ Temperature	—	•	★
2	Compensated Flow Calculations – Differential & Static Pressures	—	•	★
3	Compensated Flow Calculations – Differential Pressure & Temperature	—	•	★
4	Compensated Flow Calculations – Differential Pressure	—	•	★
D	Differential Pressure	•	—	★
Expanded				**Expanded**
5	Process Variables Only (No Flow Calculations) – Differential & Static Pressures w/ Temperature	—	•	
6	Process Variables Only (No Flow Calculations) – Differential & Static Pressures	—	•	
7	Process Variables Only (No Flow Calculations) – Differential Pressure & Temperature	—	•	
Primary element technology				
Standard				**Standard**
A	Annubar® Averaging Pitot Tube	•	•	★
C	Conditioning Orifice Plate	•	•	★
P	Orifice Plate	•	•	★
Material type				
Standard				**Standard**
S	316 SST	•	•	★
Line size				
Standard				**Standard**
005[(1)]	1/2-in. (15 mm)	•	•	★
010[(1)]	1-in. (25 mm)	•	•	★
015[(1)]	1 1/2-in. (40 mm)	•	•	★
020	2-in. (50 mm)	•	•	★
030	3-in. (80 mm)	•	•	★
040	4-in. (100 mm)	•	•	★
060	6-in. (150 mm)	•	•	★
080	8-in. (200 mm)	•	•	★
100[(2)(3)]	10-in. (250 mm)	•	•	★
120[(2)(3)]	12-in. (300 mm)	•	•	★
Primary element type				
Standard				**Standard**
N000	Annubar Sensor Size 1	•	•	★
N040	0.40 Beta Ratio (β)	•	•	★
N065[(4)]	0.65 Beta Ratio (β)	•	•	★

Table 5. Rosemount 3051SFC Compact Orifice Flowmeter ordering information

★ The Standard offering represents the most common options. The starred options (★) should be selected for best delivery.
The Expanded offering is subject to additional delivery lead time.

Temperature measurement				**D**	**1-7**	
Standard						**Standard**
T[6]	Integral RTD			—	•	★
0[5]	No Temperature Sensor			•	•	★
Expanded						**Expanded**
R[6]	Remote Thermowell and RTD			•	•	
Transmitter connection platform						
Standard						**Standard**
3	Direct-mount			•	•	★
7	Remote-mount, NPT Connections			•	•	★
Differential pressure range						
Standard						**Standard**
1	0 to 25 inH_2O (0 to 62.3 mbar)			•	•	★
2	0 to 250 inH_2O (0 to 623 mbar)			•	•	★
3	0 to 1000 inH_2O (0 to 2.5 bar)			•	•	★
Static pressure range						
Standard						**Standard**
A[7]	None			•	•	★
D	Absolute 0 to 800 psia (0 to 55.2 bar)			—	•	★
E[8]	Absolute 0 to 3626 psia (0 to 250 bar)			—	•	★
J	Gage -14.2 to 800 psig (-0.979 to 55.2 bar)			—	•	★
K[8]	Gage -14.2 to 3626 psig (-0.979 to 250 bar)			—	•	★
Transmitter output						
Standard						**Standard**
A	4–20 mA with digital signal based on HART protocol			•	•	★
F[9]	FOUNDATION fieldbus protocol			•	—	★
X[10][11]	Wireless			•	—	★
Transmitter housing style		**Material**	**Conduit entry size**			
Standard						**Standard**
00	None (Customer-supplied electrical connection)			•	—	★
1A	PlantWeb housing	Aluminum	1/2-14 NPT	•	•	★
1B	PlantWeb housing	Aluminum	M20 x 1.5	•	•	★
1J	PlantWeb housing	SST	1/2-14 NPT	•	•	★
1K	PlantWeb housing	SST	M20 x 1.5	•	•	★
2A	Junction Box housing	Aluminum	1/2-14 NPT	•	—	★
2B	Junction Box housing	Aluminum	M20 x 1.5	•	—	★
2E	Junction Box housing with output for remote display and interface	Aluminum	1/2-14 NPT	•	—	★
2F	Junction Box housing with output for remote display and interface	Aluminum	M20 x 1.5	•	—	★
2J	Junction Box housing	SST	1/2-14 NPT	•	—	★
2M	Junction Box housing with output for remote display and interface	SST	1/2-14 NPT	•	—	★
5A[12]	Wireless PlantWeb housing	Aluminum	1/2-14 NPT	•	—	★
5J[12]	Wireless PlantWeb housing	SST	1/2-14 NPT	•	—	★
7J[10][13]	Quick Connect (A size Mini, 4-pin male termination)			•	—	★
Expanded						**Expanded**
1C	PlantWeb housing	Aluminum	G1/2	•	•	
1L	PlantWeb housing	SST	G1/2	•	•	

Table 5. Rosemount 3051SFC Compact Orifice Flowmeter ordering information

★ The Standard offering represents the most common options. The starred options (★) should be selected for best delivery.

The Expanded offering is subject to additional delivery lead time.

2C	Junction Box housing	Aluminum	G1/2	•	—	
2G	Junction Box housing with output for remote display and interface	Aluminum	G1/2	•	—	
Performance class(14)				**D**	**1-7**	
Standard						**Standard**
3051S MultiVariable SuperModule, Measurement Types 1, 2, 5, and 6				•	•	
3	Ultra for Flow: 0.75% flow rate accuracy, 14:1 flow turndown, 10-yr stability, 15-yr limited warranty			•	•	★
5	Classic MV: 1.10% flow rate accuracy, 8:1 flow turndown, 5-yr stability			—	•	★
3051S Single Variable SuperModule, Measurement Types 3, 4, 7, and D				•	•	
1	Ultra: 0.90% flow rate accuracy, 8:1 flow turndown, 15-yr stability, 15-yr limited warranty			•	—	★
2	Classic: 1.40% flow rate accuracy, 8:1 flow turndown, 15-yr stability			•	—	★
3(15)	Ultra for Flow: 0.75% flow rate accuracy, 14:1 flow turndown, 15-yr stability, 15-yr limited warranty			•	•	★

Wireless options (requires option code X and wireless PlantWeb housing)

Update rate, operating frequency, and protocol	**D**	**1-7**		
Standard				**Standard**
WA	User Configurable Update Rate	•	—	★
Operating frequency and protocol				
Standard				**Standard**
3	2.4 GHz DSSS, IEC 62591 (*Wireless*HART)	•	—	★
Omnidirectional wireless antenna				
Standard				**Standard**
WK	External Antenna	•	—	★
WM	Extended Range, External Antenna	•	—	★
Expanded				**Expanded**
WN	High-Gain, Remote Antenna	•	—	
SmartPower™				
Standard				**Standard**
1(16)	Adapter for Black Power Module (I.S. Power Module Sold Separately)	•	—	★

Other options (include with selected model number)

Installation accessories	**D**	**1-7**		
Standard				**Standard**
A	ANSI Alignment Ring (150#) (Only required for 10-in. (250 mm) and 12-in. (300mm) line sizes)	•	•	★
C	ANSI Alignment Ring (300#) (Only required for 10-in. (250 mm) and 12-in. (300mm) line sizes)	•	•	★
D	ANSI Alignment Ring (600#) (Only required for 10-in. (250 mm) and 12-in. (300mm) line sizes)	•	•	★
G	DIN Alignment Ring (PN 16)	•	•	★
H	DIN Alignment Ring (PN 40)	•	•	★
J	DIN Alignment Ring (PN 100)	•	•	★
Expanded				**Expanded**
B	JIS Alignment Ring (10K)	•	•	
R	JIS Alignment Ring (20K)	•	•	
S	JIS Alignment Ring (40K)	•	•	
Remote adapters				
Standard				**Standard**
E	Flange adapters 316 SST (1/2-in. NPT)	•	•	★
High temperature applications				
Expanded				**Expanded**
T	Graphite Valve Packing (Tmax = 850 °F)	•	•	

Table 5. Rosemount 3051SFC Compact Orifice Flowmeter ordering information

★ The Standard offering represents the most common options. The starred options (★) should be selected for best delivery.

The Expanded offering is subject to additional delivery lead time.

Flow calibration		D	1-7	
Expanded				**Expanded**
WC[17]	Flow Calibration, 3 Pt, Conditioning Option C (All Pipe Schedules)	•	•	
WD[18][19]	Flow Calibration, 10 Pt, Conditioning Option C (All Schedules), Annubar Option A (Schedule 40)	•	•	
Pressure testing				
Expanded				**Expanded**
P1	Hydrostatic Testing with Certificate	•	•	
Special cleaning				
Expanded				**Expanded**
P2[20]	Cleaning for Special Processes	•	•	
PA	Cleaning per ASTM G93 Level D (section 11.4)	•	•	
Special inspection				
Standard				**Standard**
QC1	Visual & Dimensional Inspection with Certificate	•	•	★
QC7	Inspection & Performance Certificate	•	•	★
Transmitter calibration certification				
Standard				**Standard**
Q4	Calibration Data Certificate for Transmitter	•	•	★
QP	Calibration Certificate and Tamper Evident Seal	•	•	★
Quality certification for safety				
Standard				**Standard**
QS[21][22]	Prior-use certificate of FMEDA data	•	—	★
QT[21][22][25]	Safety Certified to IEC 61508 with certificate of FMEDA data	•	—	★
Material traceability certifications				
Standard				**Standard**
Q8	Material Traceability Certification per EN 10204:2004 3.1	•	•	★
Code conformance				
Expanded				**Expanded**
J2	ANSI / ASME B31.1	•	•	
J3	ANSI / ASME B31.3	•	•	
J4	ANSI / ASME B31.8	•	•	
Material conformance				
Expanded				**Expanded**
J5[23]	NACE MR-0175 / ISO 15156	•	•	
Country certification				
Expanded				**Expanded**
J1	Canadian Registration	•	•	
Product certifications				
Standard				**Standard**
E1	ATEX Flameproof	•	•	★
I1	ATEX Intrinsic Safety	•	•	★
IA	ATEX FISCO Intrinsic Safety; for FOUNDATION fieldbus protocol only	•	—	★
N1	ATEX Type n	•	•	★
ND	ATEX Dust	•	•	★
K1	ATEX Flameproof, Intrinsic Safety, Type n, Dust (combination of E1, I1, N1, and ND)	•	•	★
E4	TIIS Flameproof	•	•	★
E5	FM Explosion-proof, Dust Ignition-proof	•	•	★
I5	FM Intrinsically Safe; Nonincendive	•	•	★

Table 5. Rosemount 3051SFC Compact Orifice Flowmeter ordering information

★ The Standard offering represents the most common options. The starred options (★) should be selected for best delivery.

The Expanded offering is subject to additional delivery lead time.

K5	FM Explosion-proof, Dust Ignition-proof, Intrinsically Safe, Division 2 (combination of E5 and I5)	•	•	★
E6[24]	CSA Explosion-proof, Dust Ignition-proof, Division 2	•	•	★
I6	CSA Intrinsically Safe	•	•	★
K6[24]	CSA Explosion-proof, Dust Ignition-proof, Intrinsically Safe, Division 2 (combination of E6 and I6)	•	•	★
E7	IECEx Flameproof, Dust Ignition-proof	•	•	★
I7	IECEx Intrinsic Safety	•	•	★
K7	IECEx Flameproof, Dust Ignition-proof, Intrinsic Safety, Type n (combination of E7, I7, and N7)	•	•	★
E3	China Flameproof	•	•	★
I3	China Intrinsic Safety	•	•	★
KA[24]	ATEX and CSA Flameproof, Intrinsically Safe, Division 2 (combination of E1, I1, E6, and I6)	•	•	★
KB[24]	FM and CSA Explosion-proof, Dust Ignition-proof, Intrinsically Safe, Division 2 (combination of E5, E6, I5, and I6)	•	•	★
KC	FM and ATEX Explosion-proof, Intrinsically Safe, Division 2 (combination of E5, E1, I5, and I1)	•	•	★
KD[24]	FM, CSA, and ATEX Explosion-proof, Intrinsically Safe (combination of E5, E6, E1, I5, I6, and I1)	•	•	★
Shipboard approvals		**D**	**1-7**	
Standard				**Standard**
SBS	American Bureau of Shipping	•	•	★
Sensor fill fluid and o-ring options				
Standard				**Standard**
L1	Inert Sensor Fill Fluid	•	•	★
L2	Graphite-filled (PTFE) O-ring	•	•	★
LA	Inert sensor fill fluid and graphite-filled (PTFE) O-ring	•	•	★
Digital display[25]				
Standard				**Standard**
M5	PlantWeb LCD display	•	•	★
M7[22][26][27]	Remote mount LCD display and interface, PlantWeb housing, no cable, SST bracket	•	N/A	★
M8[22][26]	Remote mount LCD display and interface, PlantWeb housing, 50 ft. (15m) cable, SST bracket	•	N/A	★
M9[22][26]	Remote mount LCD display and interface, PlantWeb housing, 100 ft. (31m) cable, SST bracket	•	N/A	★
Transient protection				
Standard				**Standard**
T1[28]	Transient terminal block	•	•	★
Manifold for remote mount option				
Standard				**Standard**
F2	3-Valve Manifold, SST	•	•	★
F6	5-Valve Manifold, SST	•	•	★
PlantWeb control functionality				
Standard				**Standard**
A01	FOUNDATION fieldbus Advanced Control Function Block Suite	•	—	★
PlantWeb diagnostic functionality				
Standard				**Standard**
D01	FOUNDATION fieldbus Diagnostics Suite	•	—	★
DA2[29]	Advanced HART Diagnostic Suite	•	—	★
PlantWeb enhanced measurement functionality				
Standard				**Standard**
H01[30]	FOUNDATION fieldbus Fully Compensated Mass Flow Block	•	—	★
Cold temperature				
Standard				**Standard**
BRR	-58 °F (-50 °C) Cold Temperature Start-up	•	•	★

Table 5. Rosemount 3051SFC Compact Orifice Flowmeter ordering information

★ The Standard offering represents the most common options. The starred options (★) should be selected for best delivery.
The Expanded offering is subject to additional delivery lead time.

Alarm limit[21][22]		**D**	**1-7**	
Standard				**Standard**
C4	NAMUR Alarm & Saturation Levels, High Alarm	•	•	★
C5	NAMUR Alarm & Saturation Levels, Low Alarm	•	•	★
C6	Custom Alarm & Saturation Levels, High Alarm	•	•	★
C7	Custom Alarm & Saturation Levels, Low Alarm	•	•	★
C8	Low Alarm (Standard Rosemount Alarm & Saturation Levels)	•	•	★
Hardware adjustments and ground screw				
Standard				**Standard**
D1[21][22][31]	Hardware adjustments (zero, span, alarm, security).	•	—	★
D4[32]	External ground screw assembly	•	•	★
DA[21][22][31]	Hardware adjustments (zero, span, alarm, security) and external ground screw assembly	•	—	★
Conduit plug				
Standard				**Standard**
DO	316 SST Conduit Plug	•	•	★
Conduit electrical connector				
Standard				**Standard**
ZE[33]	M12, 4-pin, Male Connector (eurofast)	•	•	★
ZM[33]	A size Mini, 4-pin, Male Connector (minifast)	•	•	★
Typical model number: 3051SFC 1 C S 060 N 065 T 3 2 J A 1A 3				

(1) Available with primary element technology P only.

(2) For the 10-in. (250 mm) and 12-in. (300 mm) line sizes, the alignment ring must be ordered (Installation Accessories).

(3) 10-in. (250 mm) and 12-in. (300 mm) line sizes not available with Primary Element Technology code A.

(4) For 2-in. (50 mm) line size the beta ratio is 0.6 for Primary Element Technology code C.

(5) Required for Measurement Type codes 2, 4, 6, and D.

(6) Only available with Measurement Type codes 1, 3, 5, 7.

(7) Required for Measurement Type codes 3, 4, 7, and D.

(8) For Measurement Type codes 1, 2, 5, and 6 with DP range 1, absolute limits are 0.5 to 2000 psi (0,03 to 137,9 bar) and gage limits are -14.2 to 2000 psig (-0,98 to 137,9 bar).

(9) Requires PlantWeb housing.

(10) Only intrinsically safe approval codes apply.

(11) Only available with Measurement Types D and 6.

(12) Only available with output code X.

(13) Available with output code A only.

(14) For detailed specifications see “Specifications” on page -81.

(15) Only available with differential pressure ranges 2 and 3, and silicone fill fluid.

(16) Long-life Power Module must be shipped separately, order Power Module 701PBKKF.

(17) Available with Primary Element Technology code C only.

(18) Available with Primary Element Technology codes C or A only.

(19) For Annubar Option A, consult factory for pipe schedules other than Sch. 40.

(20) Available with primary element technology C or P only.

(21) Not available with Output Protocol code F.

(22) Not available with output code X.

(23) Materials of Construction comply with metallurgical requirements within NACE MR0175/ISO for sour oil field production environments. Environmental limits apply to certain materials. Consult latest standard for details. Selected materials also conform to NACE MR0103 for sour refining environments.

(24) Not available with M20 or G½ conduit entry size.

(25) Not available with housing code 7J.

(26) Not available with output code F, option code DA2, or option code QT.

(27) See the 3051S Reference Manual (document number 00809-0100-4801) for cable requirements. Contact an Emerson Process Management representative for additional information.

(28) Not available with Housing code 00, 5A, 5J, or 7J. External ground screw assembly (option code D4) is included with the T1 option. The T1 option is not needed with FISCO Product Certifications.

(29) Includes Hardware Adjustments (option code D1) as standard. Not available with output code X.

(30) Requires Rosemount Engineering Assistant version 5.5.1 to configure.

(31) Not available with housing codes 2E, 2F, 2G, 2M, 5A, 5J, or 7J.

(32) This assembly is included with options E1, N1, K1, ND, E4, E7, N7, K7, E3, KA, KC, KD, IA, IE, N3, and T1.

(33) Not available with Housing code 5A, 5J, or 7J. Available with Intrinsically Safe approvals only. For FM Intrinsically Safe; Nonincendive (option code I5) or FM FISCO Intrinsically Safe (option code IE), install in accordance with Rosemount drawing 03151-1009.



Rosemount 3051SFP Integral Orifice Flowmeter

- Precision honed pipe section for increased accuracy in small line sizes
- Self-centering plate design prevents alignment errors that magnify measurement inaccuracies in small line sizes

Table 6. Rosemount 3051SFP Integral Orifice Flowmeter ordering information

★ The Standard offering represents the most common options. The starred options (★) should be selected for best delivery. The Expanded offering is subject to additional delivery lead time.

Model	Product description	Measurement type		• = Available — = Unavailable
		D	1-7	
3051SFP	Integral Orifice Flowmeter	•	•	
Measurement type				
Standard				**Standard**
1	Fully Compensated Mass & Energy Flow Calculations – Differential & Static Pressures w/ Temperature	—	•	★
2	Compensated Flow Calculations – Differential & Static Pressures	—	•	★
3	Compensated Flow Calculations – Differential Pressure & Temperature	—	•	★
4	Compensated Flow Calculations – Differential Pressure	—	•	★
D	Differential Pressure	•	—	★
Expanded				**Expanded**
5	Process Variables Only (No Flow Calculations) – Differential & Static Pressures w/ Temperature	—	•	
6	Process Variables Only (No Flow Calculations) – Differential & Static Pressures	—	•	
7	Process Variables Only (No Flow Calculations) – Differential Pressure & Temperature	—	•	
Body material				
Standard				**Standard**
S	316 SST	•	•	★
Line Size				
Standard				**Standard**
005	1/2-in. (15 mm)	•	•	★
010	1-in. (25 mm)	•	•	★
015	1 1/2-in. (40 mm)	•	•	★
Process connection				
Standard				**Standard**
T1	NPT Female Body (Not Available with Remote Thermowell and RTD)	•	•	★
S1(1)	Socket Weld Body (Not Available with Remote Thermowell and RTD)	•	•	★
P1	Pipe Ends: NPT threaded	•	•	★
P2	Pipe Ends: Beveled	•	•	★
D1	Pipe Ends: Flanged, DIN PN16, slip-on	•	•	★
D2	Pipe Ends: Flanged, DIN PN40, slip-on	•	•	★
D3	Pipe Ends: Flanged, DIN PN100, slip-on	•	•	★
W1	Pipe Ends: Flanged, ANSI Class 150, weld-neck	•	•	★
W3	Pipe Ends: Flanged, ANSI Class 300, weld-neck	•	•	★
W6	Pipe Ends: Flanged, ANSI Class 600, weld-neck	•	•	★
Expanded				**Expanded**
A1	Pipe Ends: Flanged, RF, ANSI Class 150, slip-on	•	•	
A3	Pipe Ends: Flanged, RF, ANSI Class 300, slip-on	•	•	
A6	Pipe Ends: Flanged, RF, ANSI Class 600, slip-on	•	•	
R1	Pipe Ends: Flanged, RTJ, ANSI Class 150, slip-on	•	•	
R3	Pipe Ends: Flanged, RTJ, ANSI Class 300, slip-on	•	•	
R6	Pipe Ends: Flanged, RTJ, ANSI Class 600, slip-on	•	•	
P9	Special Process Connection	•	•	

Table 6. Rosemount 3051SFP Integral Orifice Flowmeter ordering information

★ The Standard offering represents the most common options. The starred options (★) should be selected for best delivery. The Expanded offering is subject to additional delivery lead time.

Orifice plate material		**D**	**1-7**	
Standard				**Standard**
S	316 SST	•	•	★
Expanded				**Expanded**
H	Alloy C-276	•	•	
M	Alloy 400	•	•	
Bore size option				
Standard				**Standard**
0066	0.066-in. (1.68 mm) for 1/2-in. pipe	•	•	★
0109	0.109-in. (2.77 mm) for 1/2-in. pipe	•	•	★
0160	0.160-in. (4.06 mm) for 1/2-in. pipe	•	•	★
0196	0.196-in. (4.98 mm) for 1/2-in. pipe	•	•	★
0260	0.260-in. (6.60 mm) for 1/2-in. pipe	•	•	★
0340	0.340-in. (8.64 mm) for 1/2-in. pipe	•	•	★
0150	0.150-in. (3.81 mm) for 1-in. pipe	•	•	★
0250	0.250-in. (6.35 mm) for 1-in. pipe	•	•	★
0345	0.345-in. (8.76 mm) for 1-in. pipe	•	•	★
0500	0.500-in. (12.70 mm) for 1-in. pipe	•	•	★
0630	0.630-in. (16.00 mm) for 1-in. pipe	•	•	★
0800	0.800-in. (20.32 mm) for 1-in. pipe	•	•	★
0295	0.295-in. (7.49 mm) for 1 1/2-in. pipe	•	•	★
0376	0.376-in. (9.55 mm) for 1 1/2-in. pipe	•	•	★
0512	0.512-in. (13.00 mm) for 1 1/2-in. pipe	•	•	★
0748	0.748-in. (19.00 mm) for 1 1/2-in. pipe	•	•	★
1022	1.022-in. (25.96 mm) for 1 1/2-in. pipe	•	•	★
1184	1.184-in. (30.07 mm) for 1 1/2-in. pipe	•	•	★
Expanded				**Expanded**
0010	0.010-in. (0.25 mm) for 1/2-in. pipe	•	•	
0014	0.014-in. (0.36 mm) for 1/2-in. pipe	•	•	
0020	0.020-in. (0.51 mm) for 1/2-in. pipe	•	•	
0034	0.034-in. (0.86 mm) for 1/2-in. pipe	•	•	
Transmitter connection platform				
Standard				**Standard**
D3	Direct-mount, 3-valve Manifold, SST	•	•	★
D5	Direct-mount, 5-valve Manifold, SST	•	•	★
R3	Remote-mount, 3-valve Manifold, SST	•	•	★
R5	Remote-mount, 5-valve Manifold, SST	•	•	★
Expanded				**Expanded**
D4	Direct-mount, 3-valve Manifold, Alloy C-276	•	•	
D6	Direct-mount, 5-valve Manifold, Alloy C-276	•	•	
D7	Direct-mount, High Temperature, 5-valve Manifold, SST	•	•	
R4	Remote-mount, 3-valve Manifold, Alloy C-276	•	•	
R6	Remote-mount, 5-valve Manifold, Alloy C-276	•	•	
Differential pressure range				
Standard				**Standard**
1	0 to 25 inH_2O (0 to 62.3 mbar)	•	•	★
2	0 to 250 inH_2O (0 to 623 mbar)	•	•	★
3	0 to 1000 inH_2O (0 to 2.5 bar)	•	•	★
Static pressure range				
Standard				**Standard**
A[(2)]	None	•	•	★

Table 6. Rosemount 3051SFP Integral Orifice Flowmeter ordering information

★ The Standard offering represents the most common options. The starred options (★) should be selected for best delivery. The Expanded offering is subject to additional delivery lead time.

D	Absolute 0 to 800 psia (0 to 55.2 bar)			—	•	★
E[3]	Absolute 0 to 3626 psia (0 to 250 bar)			—	•	★
J	Gage -14.2 to 800 psig (-0.979 to 55.2 bar)			—	•	★
K[3]	Gage -14.2 to 3626 psig (-0.979 to 250 bar)			—	•	★
Transmitter output						
Standard						**Standard**
A	4–20 mA with digital signal based on HART protocol			•	•	★
F	FOUNDATION fieldbus (Requires PlantWeb housing)			•	—	★
X[4][5]	Wireless (Requires wireless options and wireless PlantWeb housing)			•	—	★
Transmitter housing style		**Material**	**Conduit entry size**			
Standard						**Standard**
00	None (Customer-supplied electrical connection)			•	—	★
1A	PlantWeb housing	Aluminum	1/2-14 NPT	•	•	★
1B	PlantWeb housing	Aluminum	M20 x 1.5	•	•	★
1J	PlantWeb housing	SST	1/2-14 NPT	•	•	★
1K	PlantWeb housing	SST	M20 x 1.5	•	•	★
2A	Junction Box housing	Aluminum	1/2-14 NPT	•	—	★
2B	Junction Box housing	Aluminum	M20 x 1.5	•	—	★
2E	Junction Box housing with output for remote display and interface	Aluminum	1/2-14 NPT	•	—	★
2F	Junction Box housing with output for remote display and interface	Aluminum	M20 x 1.5	•	—	★
2J	Junction Box housing	SST	1/2-14 NPT	•	—	★
2M	Junction Box housing with output for remote display and interface	SST	1/2-14 NPT	•	—	★
5A[6]	Wireless PlantWeb housing	Aluminum	1/2–14 NPT	•	—	★
5J[6]	Wireless PlantWeb housing	SST	1/2–14 NPT	•	—	★
7J[4][7]	Quick Connect (A size Mini, 4-pin male termination)			•	—	★
Expanded						**Expanded**
1C	PlantWeb housing	Aluminum	G1/2	•	•	
1L	PlantWeb housing	SST	G1/2	•	•	
2C	Junction Box housing	Aluminum	G1/2	•	—	
2G	Junction Box housing with output for remote display and interface	Aluminum	G1/2	•	—	
Performance class[8]						
Standard						**Standard**
3051S MultiVariable SuperModule, Measurement Types 1, 2, 5, and 6						
3[9]	Ultra for Flow: 0.95% flow rate accuracy, 14:1 flow turndown, 10-year stability, 15-year limited warranty			•	•	★
5	Classic MV: 1.25% flow rate accuracy, 8:1 flow turndown, 5-year stability			—	•	★
3051S Single Variable SuperModule, Measurement Types 3, 4, 7, and D						
1	Ultra: 1.05% flow rate accuracy, 8:1 flow turndown, 15-year stability, 15-year limited warranty			•	•	★
2	Classic: 1.50% flow rate accuracy, 8:1 flow turndown, 15-year stability			•	•	★
3[9]	Ultra for Flow: 0.95% flow rate accuracy, 14:1 flow turndown, 15-year stability, 15-year limited warranty			•	•	★

Wireless options (requires option code X and wireless PlantWeb housing)

Update rate, operating frequency and protocol		**D**	**1-7**	
Standard				**Standard**
WA	User Configurable Update Rate	•	—	★
Operating frequency and protocol		**D**	**1-7**	

Table 6. Rosemount 3051SFP Integral Orifice Flowmeter ordering information

★ The Standard offering represents the most common options. The starred options (★) should be selected for best delivery. The Expanded offering is subject to additional delivery lead time.

Standard				
3	2.4 GHz DSSS, IEC 62591 (*Wireless*HART)	•	—	★
Omnidirectional wireless antenna				
Standard				**Standard**
WK	External Antenna	•	—	★
WM	Extended Range, External Antenna	•	—	★
Expanded				**Expanded**
WN	High-Gain, Remote Antenna	•	—	
SmartPower™				
Standard				**Standard**
1[10]	Adapter for Black Power Module (I.S. Power Module Sold Separately)	•	—	★

Other options (include with selected model number)

Transmitter / body bolt material		**D**	**1-7**	
Expanded				**Expanded**
G[11]	High temperature Option (850 °F (454 °C))	•	•	
Temperature sensor				
Standard				**Standard**
T[12]	Thermowell and RTD	•	•	★
Optional connection				
Standard				**Standard**
G1	DIN 19213 Transmitter Connection	•	•	★
Pressure testing				
Expanded				**Expanded**
P1[13]	Hydrostatic Testing with Certificate	•	•	
Special cleaning				
Expanded				**Expanded**
P2	Cleaning for Special Services	•	•	
PA	Cleaning per ASTM G93 Level D (Section 11.4)	•	•	
Material testing				
Expanded				**Expanded**
V1	Dye Penetrant Exam	•	•	
Material examination				
Expanded				**Expanded**
V2	Radiographic Examination (available only with Process Connection code W1, W3, and W6)	•	•	
Flow calibration				
Expanded				**Expanded**
WD[14]	Discharge Coefficient Verification	•	•	
WZ[14]	Special Calibration	•	•	
Special inspection				
Standard				**Standard**
QC1	Visual & Dimensional Inspection with Certificate	•	•	★
QC7	Inspection & Performance Certificate	•	•	★
Material traceability certification				
Standard				**Standard**
Q8	Material certification per EN 10204:2004 3.1	•	•	★

Table 6. Rosemount 3051SFP Integral Orifice Flowmeter ordering information

★ The Standard offering represents the most common options. The starred options (★) should be selected for best delivery. The Expanded offering is subject to additional delivery lead time.

Code conformance		D	1-7	
Expanded				**Expanded**
J2[15]	ANSI / ASME B31.1	•	•	
J3[15]	ANSI / ASME B31.3	•	•	
J4[15]	ANSI / ASME B31.8	•	•	
Materials conformance				
Expanded				**Expanded**
J5[16]	NACE MR-0175 / ISO 15156	•	•	
Country certification				
Standard				**Standard**
J6	European Pressure Directive (PED)	•	•	★
Expanded				**Expanded**
J1	Canadian Registration	•	•	
Transmitter calibration certification				
Standard				**Standard**
Q4	Calibration Data Certificate for Transmitter	•	•	★
Quality certification for safety				
Standard				**Standard**
QS[17][18]	Prior-use Certificate of FMEDA data	•	—	★
QT[17][18][20]	Safety-certified to IEC 61508 with Certificate of FMEDA data	•	—	★
Product certifications				
Standard				**Standard**
E1	ATEX Flameproof	•	•	★
I1	ATEX Intrinsic Safety	•	•	★
IA	ATEX FISCO Intrinsic Safety; for FOUNDATION fieldbus protocol only	•	—	★
N1	ATEX Type n	•	•	★
ND	ATEX Dust	•	•	★
K1	ATEX Flameproof, Intrinsic Safety, Type n, Dust (combination of E1, I1, N1, and ND)	•	•	★
E4	TIIS Flameproof	•	•	★
E5	FM Explosion-proof, Dust Ignition-proof	•	•	★
I5	FM Intrinsically Safe; Nonincendive	•	•	★
K5	FM Explosion-proof, Dust Ignition-proof, Intrinsically Safe, Division 2 (combination of E5 and I5)	•	•	★
E6[19]	CSA Explosion-proof, Dust Ignition-proof, Division 2	•	•	★
I6	CSA Intrinsically Safe	•	•	★
K6[19]	CSA Explosion-proof, Dust Ignition-proof, Intrinsically Safe, Division 2 (combination of E6 and I6)	•	•	★
E7	IECEx Flameproof, Dust Ignition-proof	•	•	★
I7	IECEx Intrinsic Safety	•	•	★
K7	IECEx Flameproof, Dust Ignition-proof, Intrinsic Safety, Type n (combination of E7, I7, and N7)	•	•	★
E3	China Flameproof	•	•	★
I3	China Intrinsic Safety	•	•	★
KA[19]	ATEX and CSA Flameproof, Intrinsically Safe, Division 2 (combination of E1, I1, E6, and I6)	•	•	★
KB[19]	FM and CSA Explosion-proof, Dust Ignition-proof, Intrinsically Safe, Division 2 (combination of E5, E6, I5, and I6)	•	•	★
KC	FM and ATEX Explosion-proof, Intrinsically Safe, Division 2 (combination of E5, E1, I5, and I1)	•	•	★
KD[19]	FM, CSA, and ATEX Explosion-proof, Intrinsically Safe (combination of E5, I5, E6, I6, E1, and I1)	•	•	★
Shipboard approvals				
Standard				**Standard**
SBS	American Bureau of Shipping	•	•	★
Sensor fill fluid and O-ring options				
Standard				**Standard**
L1	Inert Sensor Fill Fluid	•	•	★

Table 6. Rosemount 3051SFP Integral Orifice Flowmeter ordering information

★ The Standard offering represents the most common options. The starred options (★) should be selected for best delivery. The Expanded offering is subject to additional delivery lead time.

L2	Graphite-filled (PTFE) O-ring	•	•	★
LA	Inert sensor fill fluid and graphite-filled (PTFE) O-ring	•	•	★
Digital display[20]		**D**	**1-7**	
Standard				**Standard**
M5	PlantWeb LCD display (requires PlantWeb housing)	•	•	★
M7[17][21][22]	Remote mount LCD display and interface, PlantWeb housing, no cable, SST bracket	•	—	★
M8[17][22]	Remote mount LCD display and interface, PlantWeb housing, 50 ft. (15 m) cable, SST bracket	•	—	★
M9[17][22]	Remote mount LCD display and interface, PlantWeb housing, 100 ft. (31 m) cable, SST bracket	•	—	★
Transient protection				
Standard				**Standard**
T1[23]	Transient terminal block	•	•	★
PlantWeb control functionality				
Standard				**Standard**
A01	FOUNDATION fieldbus Advanced Control Function Block Suite	•	—	★
PlantWeb diagnostic functionality				
Standard				**Standard**
D01	FOUNDATION fieldbus Diagnostics Suite	•	—	★
DA2[24]	Advanced HART Diagnostics Suite	•	—	★
PlantWeb enhanced measurement functionality				
Standard				**Standard**
H01[25]	FOUNDATION fieldbus Fully Compensated Mass Flow Block	•	—	★
Cold temperature				
Standard				**Standard**
BRR	-58 °F (-50 °C) Cold Temperature Start-up	—	•	★
Alarm limit[17][18]				
Standard				**Standard**
C4	NAMUR Alarm & Saturation Levels, High Alarm	•	•	★
C5	NAMUR Alarm & Saturation Levels, Low Alarm	•	•	★
C6	Custom Alarm & Saturation Levels, High Alarm	•	•	★
C7	Custom Alarm & Saturation Levels, Low Alarm	•	•	★
C8	Low Alarm (Standard Rosemount Alarm & Saturation Levels)	•	•	★
Hardware adjustments and ground screw				
Standard				**Standard**
D1[17][18][26]	Hardware Adjustments (zero, span, alarm, security)	•	—	★
D4[27]	External ground screw assembly	•	•	★
DA[17][18][26]	Hardware adjustments (zero, span, alarm, security) & External Ground Screw Assembly	•	—	★
Conduit plug				
Standard				**Standard**
DO	316 SST Conduit Plug	•	•	★
Conduit electrical connector				
Expanded				**Expanded**
GE[28]	M12, 4-pin, Male Connector (*eurofast*)	•	•	
GM[28]	A size Mini, 4-pin, Male Connector (*minifast*)	•	•	
Typical model number: 3051SFP 1 S 010 W3 S 0150 D3 1 J A 1A 3 M5				

(1) To improve pipe perpendicularity for gasket sealing, socket diameter is smaller than standard pipe O.D.

(2) Required for Measurement Type codes 3, 4, 7, and D.

(3) For Measurement Type codes 1, 2, 5, and 6 with DP range 1, absolute limits are 0.5 to 2000 psi (0,03 to 137,9 bar) and gage limits are -14.2 to 2000 psig (-0,98 to 137,9 bar).

(4) Only intrinsically safe approval codes apply.

(5) Only available with Measurement Types D and 6.

(6) Only available with output code X.

(7) Only available with output code A.

(8) For detailed specifications see "Specifications" on page -81.

(9) Only available with differential pressure ranges 2 and 3, and silicone fill fluid.

(10) Long-life Power Module must be shipped separately, order Power Module 701PBKKF.

(11) Not available with $1^1/2$-in. (38 mm) line size.

(12) Thermowell material is the same as the body material.

(13) Does not apply to Process Connection codes T1 and S1.

(14) Not available for bore sizes 0010, 0014, 0020, or 0034.

(15) Not available with DIN Process Connection codes D1, D2, or D3.

(16) Materials of Construction comply with metallurgical requirements within NACE MR0175/ISO for sour oil field production environments. Environmental limits apply to certain materials. Consult latest standard for details. Selected materials also conform to NACE MR0103 for sour refining environments.

(17) Not available with output code X.

(18) Not available with output code F.

(19) Not available with M20 or G ½ conduit entry size.

(20) Not available with housing code 7J.

(21) See the 3051S Reference Manual (document number 00809-0100-4801) for cable requirements. Contact an Emerson Process Management representative for additional information.

(22) Not available with output code F, option code DA2, or option code QT.

(23) Not available with Housing code 5A, 5J, or 7J. The T1 option is not needed with FISCO Product Certifications.

(24) Includes Hardware Adjustments (option code D1) as standard. Not available with output code X.

(25) Requires Rosemount Engineering Assistant version 5.5.1 to configure.

(26) Not available with housing codes 2E, 2F, 2G, 2M, 5A, 5J, or 7J.

(27) This assembly is included with options E1, N1, K1, ND, E4, E7, N7, K7, E2, E3, KA, KC, KD, IA, IE, N3, and T1.

(28) Not available with Housing code 5A, 5J, or 7J. Available with Intrinsically Safe approvals only. For FM Intrinsically Safe; Nonincendive (option code I5) or FM FISCO Intrinsically Safe (option code IE), install in accordance with Rosemount drawing 03151-1009.

Rosemount 3051S Electronic Remote Sensor (ERS) System

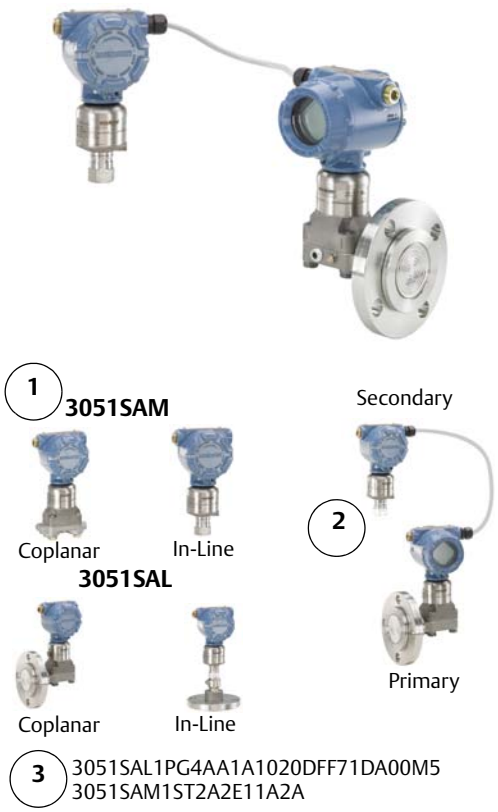

The 3051S ERS System is a flexible, 2-wire 4-20 mA HART architecture that calculates differential pressure (DP) electronically using two pressure sensors that are linked together with a non-proprietary electrical wire.

Ideal applications for the 3051S ERS System include tall vessels and distillation columns that have traditionally required long lengths of capillary or impulse piping. When used in these types of applications, the 3051S ERS System can deliver:

- More accurate and repeatable DP measurements
- Faster time response
- Simplified installations
- Reduced maintenance

How to order

1. Choose two 3051S ERS transmitter models. These may be any combination of 3051SAM and 3051SAL models.
2. Decide which model will be the ERS Primary (4-20 mA loop termination and optional LCD display) and which will be the ERS Secondary. This will be specified by the "Configuration Type" code in each model number.
3. Specify two full model numbers per the desired configuration.

Additional information

Specifications: page 81

Certifications: page 111

Dimensional drawings: page 111



Rosemount 3051SAM Transmitter for ERS Applications

- Coplanar and in-line sensor module platforms
- Variety of process connections including threaded NPT, flanges, manifolds, and 1199 remote seals
- Available with 15-year stability and 15-year limited warranty

Table 7. Rosemount 3051SAM Transmitter for ERS Applications ordering information

★ The Standard offering represents the most common options. The starred options (★) should be selected for best delivery.
The Expanded offering is subject to additional delivery lead time.

Model	Transmitter type	
3051SAM	Scalable Advanced Measurement Transmitter	
Performance class[(1)]		
Standard		**Standard**
1	Ultra: 0.025% span accuracy, 200:1 rangedown, 15-year stability, 15-year limited warranty	★
2	Classic: 0.035% span accuracy, 150:1 rangedown, 15-year stability	★

Table 7. Rosemount 3051SAM Transmitter for ERS Applications ordering information

★ The Standard offering represents the most common options. The starred options (★) should be selected for best delivery.
The Expanded offering is subject to additional delivery lead time.

Configuration type					
Standard					**Standard**
P	Electronic Remote Sensor - Primary				★
S	Electronic Remote Sensor - Secondary				★
Pressure module type		**Pressure sensor type**			
Standard					**Standard**
G	Coplanar	Gage			★
T	In-Line	Gage			★
E	In-Line	Absolute			★
Expanded					**Expanded**
A	Coplanar	Absolute			
Pressure range[2]					
	Coplanar gage	**In-line gage**	**In-line absolute**	**Coplanar absolute**	
Standard					**Standard**
1A	N/A	-14.7 to 30 psig (-1,0 to 2,06 bar)	0 to 30 psia (0 to 2,06 bar)	0 to 30 psia (0 to 2,06 bar)	★
2A	-250 to 250 inH2O (-623 to 623 mbar)	-14.7 to 150 psig (-1,0 to 10,34 bar)	0 to 150 psia (0 to 10,34 bar)	0 to 150 psia (0 to 10,34 bar)	★
3A	-393 to 1000 inH2O (-0,98 to 2,49 bar)	-14.7 to 800 psig (-1,0 to 55,2 bar)	0 to 800 psia (0 to 55,2 bar)	0 to 800 psia (0 to 55,2 bar)	★
4A	-14.2 to 300 psig (-0,98 to 20,7 bar)	-14.7 to 4000 psig (-1,0 to 275,8 bar)	0 to 4000 psia (0 to 275,8 bar)	0 to 4000 psia (0 to 275,8 bar)	★
5A	-14.2 to 2000 psig (-0,98 to 137,9 bar)	-14.7 to 10000 psig (-1,0 to 689,5 bar)	0 to 10000 psia (0 to 689,5 bar)	N/A	★
Isolating diaphragm					
Standard					**Standard**
2[3]	316L SST				★
3[3]	Alloy C-276				★
Expanded					**Expanded**
4[3][4]	Alloy 400				
5[4][5]	Tantalum				
6[3][4]	Gold-plated Alloy 400 (includes Graphite-Filled PTFE O-Ring)				
7[3][4]	Gold-plated 316L SST				
Process connection					
	Coplanar module type		**In-line module type**		
Standard					**Standard**
A11[6]	Assemble to Rosemount 305 Manifold		Assemble to Rosemount 306 Manifold		★
A12[6]	Assemble to Rosemount 304 or AMF Manifold with SST Traditional Flange		Assemble AMF Manifold to ½-14 NPT Female Process Connection		★
A15	Assemble to Rosemount 304 or AMF manifold to SST Traditional Flange with Alloy C-276 Drain Vents		N/A		★
A22	Assemble AMF manifold to SST Coplanar Flange		N/A		★
B11[6][7]	Assemble to One Rosemount 1199 Remote Diaphragm Seal with SST transmitter flange		Assemble to One Rosemount 1199 Remote Diaphragm		★
E11	Coplanar Flange (CS), ¼-18 NPT, 316 SST Drain Vents		½ -14 NPT Female		★
E12	Coplanar Flange (SST), ¼-18 NPT, 316 SST Drain Vents		N/A		★
E13[3]	Coplanar Flange (Cast C-276), ¼-18 NPT, Alloy C-276 Drain Vents		N/A		★
E14	Coplanar Flange (Cast Alloy 400), ¼-18 NPT, Alloy 400/K-500 Drain Vents		N/A		★
E15[3]	Coplanar Flange (SST), ¼-18 NPT, Alloy C-276 Drain Vents		N/A		★
E16[3]	Coplanar Flange (CS), ¼-18 NPT, Alloy C-276 Drain Vents		N/A		★

Table 7. Rosemount 3051SAM Transmitter for ERS Applications ordering information

★ The Standard offering represents the most common options. The starred options (★) should be selected for best delivery.
The Expanded offering is subject to additional delivery lead time.

E21	Coplanar Flange (CS), RC ¼, 316 SST Drain Vents	N/A		★
E22	Coplanar Flange (SST), RC ¼, 316 SST Drain Vents	N/A		★
E23(3)	Coplanar Flange (Cast C-276), RC ¼, Alloy C-276 Drain Vents	N/A		★
E24	Coplanar Flange (Cast Alloy 400), RC ¼, Alloy 400/K-500 Drain Vents	N/A		★
E25(3)	Coplanar Flange (SST), RC ¼, Alloy C-276 Drain Vents	N/A		★
Standard				**Standard**
E26(3)	Coplanar Flange (CS), RC ¼, Alloy C-276 Drain Vents	N/A		★
F12	Traditional Flange (SST), 1/4-18 NPT, 316 SST Drain Vents	N/A		★
F13(3)	Traditional Flange (Cast C-276), 1/4-18 NPT, Alloy C-276 Drain Vents	N/A		★
F14	Traditional Flange (Cast Alloy 400), 1/4-18 NPT, Alloy 400/K-500 Drain Vents	N/A		★
F15(3)	Traditional Flange (SST), 1/4-18 NPT, Alloy C-276 Drain Vents	N/A		★
F22	Traditional Flange (SST), RC ¼, 316 SST Drain Vents	N/A		★
F23(3)	Traditional Flange (Cast C-276), RC ¼, Alloy C-276 Drain Vents	N/A		★
F24	Traditional Flange (Cast Alloy 400), RC ¼, Alloy 400/K500 Drain Vents	N/A		★
F25(3)	Traditional Flange (SST), RC ¼, Alloy C-276 Drain Vents	N/A		★
F52	DIN-Compliant Traditional Flange (SST), ¼-18 NPT, 316 Drain Vents, 7-16-in. Bolting	N/A		★
G11	Vertical Mount Level Flange (SST), 2-in ANSI Class 150, 316 SST Drain Vents	G1/2 A DIN 16288 male (Range 1-4 only)		★
G12	Vertical Mount Level Flange (SST), 2-in ANSI Class 300, 316 SST Drain Vents	N/A		★
G21	Vertical Mount Level Flange (SST), 3-in ANSI Class 150, 316 SST Drain Vents	N/A		★
G22	Vertical Mount Level Flange (SST), 3-in ANSI Class 300, 316 SST Drain Vents	N/A		★
G31	Vertical Mount Level Flange (SST), DIN-DN 50 PN 40, 316 SST Drain Vents	N/A		★
G41	Vertical Mount Level Flange (SST), DIN-DN 80 PN 40, 316 SST Drain Vents	N/A		★
Expanded				**Expanded**
F11	Traditional Flange (CS), ¼-18 NPT, 316 SST Drain / Vents	Non-Threaded Instrument Flange (I-Flange)		
F32	Bottom Vent Traditional Flange (SST), ¼-18 NPT, 316 SST Drain Vents	N/A		
F42	Bottom Vent Traditional Flange (SST), RC ¼, 316 SST Drain Vents	N/A		
F62	DIN-Compliant Traditional Flange (316 SST), ¼-18 NPT, 316 Drain Vents, M10 Bolting	N/A		
F72	DIN-Compliant Traditional Flange (316 SST), ¼-18 NPT, 316 Drain Vents, M12 Bolting	N/A		
Transmitter output				
Standard				**Standard**
A	4–20 mA with digital signal based on HART protocol			★
Housing style		**Material**	**Conduit entry size**	
Standard				**Standard**
Housings for ERS Primary - Configuration Type code P				
1A	PlantWeb housing	Aluminum	1/2–14 NPT	★
1B	PlantWeb housing	Aluminum	M20 x 1.5 (CM 20)	★
1J	PlantWeb housing	SST	1/2–14 NPT	★
1K	PlantWeb housing	SST	M20 x 1.5 (CM 20)	★
2E	Junction Box with Remote Display Output	Aluminum	1/2–14 NPT	★

Table 7. Rosemount 3051SAM Transmitter for ERS Applications ordering information

★ The Standard offering represents the most common options. The starred options (★) should be selected for best delivery.
The Expanded offering is subject to additional delivery lead time.

2F	Junction Box with Remote Display Output	Aluminum	M20 x 1.5 (CM 20)	★
2M	Junction Box with Remote Display Output	SST	1/2–14 NPT	★
Standard				**Standard**
Housings for ERS Secondary - Configuration Type code S				
2A	Junction Box	Aluminum	1/2–14 NPT	★
2B	Junction Box	Aluminum	M20 x 1.5 (CM 20)	★
2J	Junction Box	SST	1/2–14 NPT	★
Expanded				**Expanded**
Housings for ERS Primary - Configuration Type code P				
1C	PlantWeb housing	Aluminum	G1/2	
1L	PlantWeb housing	SST	G1/2	
2G	Junction Box with Remote Display Output	Aluminum	G1/2	
Housings for ERS Secondary - Configuration Type code S				
2C	Junction Box	Aluminum	G1/2	

Options (include with selected model number)

Electronic remote sensor connection cable		
Standard		**Standard**
R05	50 ft. (15.2 m) Spool of Electronic Remote Sensor Cable	★
R10	100 ft. (30.5 m) Spool of Electronic Remote Sensor Cable	★
R15	150 ft. (45.7 m) Spool of Electronic Remote Sensor Cable	★
Mounting bracket		
Standard		**Standard**
B1(4)	Traditional flange bracket, CS, 2-in. pipe	★
B2(4)	Traditional flange bracket, CS, panel	★
B3(4)	Traditional flange flat bracket, CS, 2-in. pipe	★
B4	Bracket, all SST, 2-in. Pipe and Panel	★
B7(4)	Traditional flange bracket, B1 with SST bolts	★
B8(4)	Traditional flange bracket, B2 with SST bolts	★
B9(4)	Traditional flange bracket, B3 with SST bolts	★
BA(4)	Traditional flange bracket, B1, all SST	★
BC(4)	Traditional flange bracket, B3, all SST	★
Special configuration (software)		
Standard		**Standard**
C1(8)	Customer Software Configuration (“Configuration Data Sheet” must be completed)	★
C3	Gage Pressure Calibration on Rosemount 3051SAM_ _A4 only	★
C4(8)	NAMUR Alarm and Saturation Levels, High Alarm	★
C5(8)	NAMUR Alarm and Saturation Levels, Low Alarm	★
C6(8)	Custom Alarm and Saturation Levels, High Alarm (Requires C1 and Configuration Data Sheet)	★
C7(8)	Custom Alarm and Saturation Levels, Low Alarm (Requires C1 and Configuration Data Sheet)	★
C8(8)	Low alarm (standard Rosemount alarm and saturation levels)	★
Special configuration (hardware)		
Standard		**Standard**
D2(9)	1/2-14 NPT Flange Adapters	★
D4(10)	External ground screw assembly	★
D5(9)	Delete transmitter drain/vent valves (install plugs)	★
Expanded		**Expanded**
D7(9)	Coplanar flange without drain/vent ports	
D9(9)	RC 1/2 Flange Adapters	

Table 7. Rosemount 3051SAM Transmitter for ERS Applications ordering information

★ The Standard offering represents the most common options. The starred options (★) should be selected for best delivery.
The Expanded offering is subject to additional delivery lead time.

Product certifications		
Standard		**Standard**
E1	ATEX Flameproof	★
I1	ATEX Intrinsic Safety	★
N1	ATEX Type n	★
K1	ATEX Flameproof and Intrinsically Safe, Type n, Dust	★
ND	ATEX Dust	★
E4	TIIS Flameproof	★
E5	FM Explosion-proof, Dust Ignition-proof	★
I5	FM Intrinsically Safe; Nonincendive	★
K5	FM Explosion-proof, Dust Ignition-proof, Intrinsically Safe, Division 2	★
E6[(11)]	CSA Explosion-proof, Dust Ignition-proof, Division 2	★
I6	CSA Intrinsically Safe	★
K6[(11)]	CSA Explosion-proof, Dust Ignition-proof, Intrinsically Safe, Division 2	★
E7	IECEx Flameproof	★
I7	IECEx Intrinsic Safety	★
N7	IECEx Type n	★
K7	IECEx Flameproof, Intrinsic Safety, Type n	★
E2	INMETRO Flameproof	★
I2	INMETRO Intrinsically Safe	★
K2	INMETRO Flameproof, Intrinsic Safety, Type n	★
E3	China Flameproof	★
I3	China Intrinsic Safety, Dust Ignition-proof	★
KA[(11)]	ATEX and CSA Flameproof, Intrinsically Safe, Division 2	★
KB[(11)]	FM and CSA Explosion-proof, Dust Ignition-proof, Intrinsically Safe, Division 2	★
KC	FM and ATEX Explosion-proof, Intrinsically Safe, Division 2	★
KD[(11)]	FM, CSA, and ATEX Explosion-proof, Intrinsically Safe	★
Special certifications		
Calibration certification		
Standard		**Standard**
Q4	Calibration certificate	★
QP	Calibration Certificate and Tamper Evident Seal	★
Material traceability certification		
Standard		**Standard**
Q8	Material Traceability Certification per EN 10204 3.1	★
Quality certification for safety		
Standard		**Standard**
QS	Prior-use certificate of FMEDA Data	★
Surface finish certification		
Standard		**Standard**
Q16[(12)]	Surface Finish Certification for Hygienic Remote Seals	★
Toolkit performance reports		
Standard		**Standard**
QZ[(13)]	Remote Seal System Performance Calculation Report	★
Terminal blocks		
Standard		**Standard**
T1[(8)]	Transient Terminal Block	★

Table 7. Rosemount 3051SAM Transmitter for ERS Applications ordering information

★ The Standard offering represents the most common options. The starred options (★) should be selected for best delivery.
The Expanded offering is subject to additional delivery lead time.

Sensor fill fluid		
Standard		**Standard**
L1[14]	Inert Sensor Fill Fluid	★
O-ring		
Standard		**Standard**
L2	Graphite-Filled PTFE O-Ring	★
Bolting material		
Standard		**Standard**
L4[9]	Austenitic 316 SST Bolts	★
L5[3][9]	ASTM A 193, Grade B7M Bolts	★
L6[9]	Alloy K-500 Bolts	★
L7[3][9]	ASTM A 453, Class D, Grade 660 Bolts	★
L8[9]	ASTM A 193, Class 2, Grade B8M Bolts	★
Display type (ERS Primary only)		
Standard		**Standard**
M5[8]	PlantWeb LCD display	★
M7[8][15]	Remote Mount LCD display and Interface, PlantWeb housing, No Cable, SST Bracket	★
M8[8]	Remote Mount LCD display and Interface, PlantWeb housing, 50 ft. (15.2 m) Cable, SST Bracket	★
M9[8]	Remote Mount LCD display and Interface, PlantWeb housing, 100 ft. (30.5 m) Cable, SST Bracket	★
Special procedures		
Pressure testing		
Expanded		**Expanded**
P1	Hydrostatic Testing with Certificate	
Special cleaning		
Expanded		**Expanded**
P2[9]	Cleaning for Special Services	
P3[9]	Cleaning for Less than 1 PPM Chlorine/Fluorine	
NACE Certificate		
Standard		**Standard**
Q15[16]	Certificate of Compliance to NACE MR0175/ISO 15156 for wetted materials	★
Q25[16]	Certificate of Compliance to NACE MR0103 for wetted materials	★
Typical model number: 3051SAM 1 S T 2A 2 E11 A 2A		

(1) For detailed specifications see "Specifications" on page -81.

(2) The pressure range should be specified based on the maximum static pressure, not differential pressure.

(3) Materials of Construction comply with metallurgical requirements highlighted within NACE MR 0175 / ISO 15156 for sour oil field production environments. Environmental limits apply to certain materials. Consult latest standard for details. Selected materials also conform to NACE MR 0103 for sour refining environments. Order with Q15 or Q25 to receive a NACE certificate.

(4) Not available with Pressure Sensor / Module codes T or E.

(5) Tantalum diaphragm material is only available with Pressure Sensor / Module code G.

(6) "Assemble to" items are specified separately and require a completed model number.

(7) Consult an Emerson Process Management representative for performance specifications.

(8) Not available with Configuration Type code S.

(9) Not available with Process Connection code A11.

(10) This assembly is included with options E1, N1, K1, ND, E4, E7, N7, K7, E2, KA, KC, KD, K2, and T1.

(11) Not available with M20 or G ½ conduit entry size.

(12) Q16 is only available when the diaphragm seal has surface finish options.

(13) The QZ report quantifies the performance of the entire ERS system. One report is provided per ERS system. The QZ option is specified on the Primary Transmitter (Configuration Type code P).

(14) Silicone fill fluid is standard.

(15) See the 3051S Reference Manual (document number 00809-0100-4801) for cable requirements. Contact an Emerson Process Management representative for additional information.

(16) NACE compliant wetted materials are identified by Footnote 3.



Rosemount 3051SAL Transmitter for ERS™ Applications

- Integrated transmitter and direct mount seal in a single model number
- Variety of process connections including flanged, threaded, and hygienic remote seals
- Available with 15-year limited warranty

A 3051SAL Scalable ERS Level Transmitter consists of 3 parts. First, specify the transmitter model codes found on page 57. Then, specify a direct mount seal found on page 71. Finish the model number by specifying all desired options on page 60.

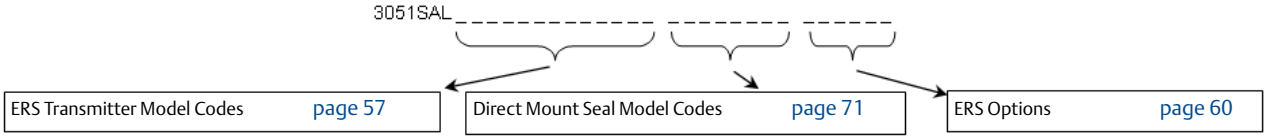

Table 8. Rosemount 3051SAL Transmitter for ERS Applications ordering information

★ The Standard offering represents the most common options. The starred options (★) should be selected for best delivery.
The Expanded offering is subject to additional delivery lead time.

Model	Transmitter type				
3051SAL	Scalable Advanced Level Transmitter				
Performance class[1]					
Standard					**Standard**
1	Ultra: 0.055% span accuracy, 150:1 rangedown, 15-year limited warranty				★
2	Classic: 0.065% span accuracy, 150:1 rangedown				★
Configuration type					
Standard					**Standard**
P	Electronic Remote Sensor - Primary				★
S	Electronic Remote Sensor - Secondary				★
Pressure module type		**Pressure sensor type**			
Standard					**Standard**
G	Coplanar	Gage			★
T	In-Line	Gage			★
E	In-Line	Absolute			★
Expanded					**Expanded**
A	Coplanar	Absolute			
Pressure range[6]					
	Coplanar gage	**In-line gage**	**In-line absolute**	**Coplanar absolute**	
Standard					**Standard**
1A	N/A	-14.7 to 30 psig (-1,0 to 2,06 bar)	0 to 30 psia (0 to 2,06 bar)	0 to 30 psia (0 to 2,06 bar)	★
2A	-250 to 250 inH2O (-623 to 623 mbar)	-14.7 to 150 psig (-1,0 to 10,34 bar)	0 to 150 psia (0 to 10,34 bar)	0 to 150 psia (0 to 10,34 bar)	★
3A	-393 to 1000 inH2O (-0,98 to 2,49 bar)	-14.7 to 800 psig (-1,0 to 55,2 bar)	0 to 800 psia (0 to 55,2 bar)	0 to 800 psia (0 to 55,2 bar)	★
4A	-14.2 to 300 psig (-0,98 to 20,7 bar)	-14.7 to 4000 psig (-1,0 to 275,8 bar)	0 to 4000 psia (0 to 275,8 bar)	0 to 4000 psia (0 to 275,8 bar)	★
5A	-14.2 to 2000 psig (-0,98 to 137,9 bar)	-14.7 to 10000 psig (-1,0 to 689,5 bar)	0 to 10000 psia (0 to 689 bar)	N/A	★

Table 8. Rosemount 3051SAL Transmitter for ERS Applications ordering information

★ The Standard offering represents the most common options. The starred options (★) should be selected for best delivery. The Expanded offering is subject to additional delivery lead time.

Transmitter output				
Standard				**Standard**
A	4-20 mA with Digital Signal Based on HART Protocol			★
Housing style		**Material**	**Conduit entry size**	
Standard				**Standard**
Housings for ERS Primary - Configuration Type Code P				
1A	PlantWeb housing	Aluminum	1/2–14 NPT	★
1B	PlantWeb housing	Aluminum	M20 x 1.5 (CM 20)	★
1J	PlantWeb housing	SST	1/2–14 NPT	★
1K	PlantWeb housing	SST	M20 x 1.5 (CM 20)	★
2E	Junction Box with Remote Display Output	Aluminum	1/2–14 NPT	★
2F	Junction Box with Remote Display Output	Aluminum	M20 x 1.5 (CM 20)	★
2M	Junction Box with Remote Display Output	SST	1/2–14 NPT	★
Housings for ERS Secondary - Configuration Type Code S				
2A	Junction Box	Aluminum	1/2–14 NPT	★
2B	Junction Box	Aluminum	M20 x 1.5 (CM 20)	★
2J	Junction Box	SST	1/2–14 NPT	★
Expanded				**Expanded**
Housings for ERS Primary - Configuration Type Code P				
1C	PlantWeb housing	Aluminum	G1/2	
1L	PlantWeb housing	SST	G1/2	
2G	Junction Box with Remote Display Output	Aluminum	G1/2	
Housings for ERS Secondary - Configuration Type Code S				
2C	Junction Box	Aluminum	G1/2	
Seal system type				
Standard				**Standard**
1	Direct-Mount Seal System			★
Direct-mount extension (between transmitter flange and seal)				
Standard				**Standard**
0	No Extension			★
2	2-in. (50 mm) Extension			★
4	4-in. (100 mm) Extension			★
5	Thermal Optimizer			★
Transmitter reference pressure connection				
Standard				**Standard**
00	None (In-Line Style Sensor)			★
20	316L SST Isolator / SST Transmitter Flange			★
30	Alloy C-276 Isolator / SST Transmitter Flange			★

Table 8. Rosemount 3051SAL Transmitter for ERS Applications ordering information

★ The Standard offering represents the most common options. The starred options (★) should be selected for best delivery.
The Expanded offering is subject to additional delivery lead time.

Seal fill fluid		Specific gravity at 77 °F (25 °C)	Temperature limits[2]				
			No extension	2-in. (50 mm) extension	4-in. (100 mm) extension	Thermal optimizer	
Standard							**Standard**
D	Silicone 200	0.93	-49 to 401 °F (-45 to 205 °C)	-49 to 401 °F (-45 to 205 °C)	-49 to 401 °F (-45 to 205 °C)	-49 to 401 °F (-45 to 205 °C)	★
C	Silicone 704	1.07	32 to 401 °F[3] (0 to 205 °C)	32 to 464 °F[3] (0 to 240 °C)	32 to 500 °F[3] (0 to 260 °C)	32 to 599 °F (0 to 315 °C)	★
V	Silicone 705	1.09	68 to 401 °F[3] (20 to 205 °C)	68 to 464 °F[3] (20 to 240 °C)	68 to 500 °F[3] (20 to 260 °C)	68 to 698 °F[3] (20 to 370 °C)	★
A	Syltherm XLT	0.85	-102 to 293 °F (-75 to 145 °C)	-102 to 293 °F (-75 to 145 °C)	-102 to 293 °F (-75 to 145 °C)	-102 to 293 °F (-75 to 145 °C)	★
H	Inert (Halocarbon)	1.85	-49 to 320 °F (-45 to 160 °C)	-49 to 320 °F (-45 to 160 °C)	-49 to 320 °F (-45 to 160 °C)	-49 to 320 °F (-45 to 160 °C)	★
G[4][5]	Glycerin and Water	1.13	5 to 203 °F (-15 to 95 °C)	5 to 203 °F (-15 to 95 °C)	5 to 203 °F (-15 to 95 °C)	5 to 203 °F (-15 to 95 °C)	★
N[4]	Neobee M-20	0.92	5 to 401 °F[3] (-15 to 205 °C)	5 to 437 °F (-15 to 225 °C)	5 to 437 °F (-15 to 225 °C)	5 to 437 °F (-15 to 225 °C)	★
P[4][5]	Propylene Glycol and Water	1.02	5 to 203 °F (-15 to 95 °C)	5 to 203 °F (-15 to 95 °C)	5 to 203 °F (-15 to 95 °C)	5 to 203 °F (-15 to 95 °C)	★

Continue specifying a completed model number by choosing a remote seal type below:

	page 71	FF Flush Flanged Seal	Process Connections: 2 in. / DN 50 / 50A 3 in. / DN 80 / 80A 4 in. / DN 100 / 100A
	page 73	EF Extended Flanged Seal	Process Connections: 3 in. / DN 80 / 80A 4 in. / DN 100 / 100A
	page 74	RF Remote Flanged Seal	Process Connections: 1 in. / DN 25 / 25A 1.5 in. / DN 40 / 40A
	page 76	RT Remote Threaded Seal	Process Connections: ¼ - 18 NPT ½ - 14 NPT ¾ - 14 NPT 1 – 11.5 NPT
	page 78	SC Hygienic Tri-Clamp Seal	Process Connections: 1.5 in. 2 in. 3 in.
	page 79	SS Hygienic Tank Spud Seal	Process Connections: 4 in.

Table 8. Rosemount 3051SAL Transmitter for ERS Applications ordering information

★ The Standard offering represents the most common options. The starred options (★) should be selected for best delivery.

The Expanded offering is subject to additional delivery lead time.

Options (include with selected model number)[(2)(3)(4)(5)]

Electronic remote sensor connection cable		
Standard[(6)]		**Standard**
R05	50 ft. (15.2 m) Spool of Electronic Remote Sensor Cable	★
R10	100 ft. (30.5 m) Spool of Electronic Remote Sensor Cable	★
R15	150 ft. (45.7 m) Spool of Electronic Remote Sensor Cable	★
Software configuration		
Standard		**Standard**
C1[(7)]	Custom Software Configuration (Requires Configuration Data Sheet)	★
Gage pressure calibration		
Standard		**Standard**
C3	Gage Pressure Calibration on Rosemount 3051SAL_ _A4 only	★
Alarm limit		
Standard		**Standard**
C4[(7)]	NAMUR Alarm and Saturation Levels, High Alarm	★
C5[(7)]	NAMUR Alarm and Saturation Levels, Low Alarm	★
C6[(7)]	Custom Alarm and Saturation Levels, High Alarm (Requires C1 and Configuration Data Sheet)	★
C7[(7)]	Custom Alarm and Saturation Levels, Low Alarm (Requires C1 and Configuration Data Sheet)	★
C8[(7)]	Low Alarm (Standard Rosemount Alarm and Saturation Levels)	★
Ground screw		
Standard		**Standard**
D4[(8)]	External Ground Screw Assembly	★
Conduit plug		
Standard		**Standard**
DO	316 SST Conduit Plug	★
Product certifications		
Standard		**Standard**
E1	ATEX Flameproof	★
I1	ATEX Intrinsic Safety	★
N1	ATEX Type n	★
K1	ATEX Flameproof and Intrinsically Safe, Type n, Dust	★
ND	ATEX Dust	★
E4	TIIS Flameproof	★
E5	FM Explosion-proof, Dust Ignition-proof	★
I5	FM Intrinsically Safe; Nonincendive	★
K5	FM Explosion-proof, Dust Ignition-proof, Intrinsically Safe, Division 2	★
E6[(9)]	CSA Explosion-proof, Dust Ignition-proof, Division 2	★
I6	CSA Intrinsically Safe	★
K6[(9)]	CSA Explosion-proof, Dust Ignition-proof, Intrinsically Safe, Division 2	★
E7	IECEx Flameproof	★
I7	IECEx Intrinsic Safety	★
N7	IECEx Type n	★
K7	IECEx Flameproof, Intrinsic Safety, Type n	★

Table 8. Rosemount 3051SAL Transmitter for ERS Applications ordering information

★ The Standard offering represents the most common options. The starred options (★) should be selected for best delivery.
The Expanded offering is subject to additional delivery lead time.

Standard		**Standard**
E2	INMETRO Flameproof	★
I2	INMETRO Intrinsically Safe	★
K2	INMETRO Flameproof, Intrinsic Safety	★
KA[(9)]	ATEX and CSA Flameproof, Intrinsically Safe, Division 2	★
KB[(9)]	FM and CSA Explosion-proof, Dust Ignition-proof, Intrinsically Safe, Division 2	★
KC	FM and ATEX Explosion-proof, Intrinsically Safe, Division 2	★
KD[(9)]	FM, CSA, and ATEX Explosion-proof, Intrinsically Safe	★
Sensor fill fluid		
Standard		**Standard**
L1[(10)]	Inert Sensor Fill Fluid	★
O-ring		
Standard		**Standard**
L2	Graphite-filled PTFE o-ring	★
Bolting material		
Standard		**Standard**
L4	Austenitic 316 SST Bolts	★
L5	ASTM A 193, Grade B7M Bolts	★
L6	Alloy K-500 Bolts	★
L7[(11)]	ASTM A 453, Class D, Grade 660 Bolts	★
L8	ASTM A 193, Class 2, Grade B8M Bolts	★
Display type (ERS Primary only)		
Standard		**Standard**
M5[(7)]	PlantWeb LCD display	★
M7[(7)(12)]	Remote Mount LCD display and Interface, PlantWeb housing, No Cable, SST Bracket	★
M8[(7)]	Remote Mount LCD display and Interface, PlantWeb housing, 50 ft. (15.2 m) Cable, SST Bracket	★
M9[(7)]	Remote Mount LCD display and Interface, PlantWeb housing, 100 ft. (30.5 m) Cable, SST Bracket	★
Special procedures		
Pressure testing		
Expanded		**Expanded**
P1	Hydrostatic Testing with Certificate	
Special cleaning		
Expanded		**Expanded**
P2	Cleaning for Special Services	
P3	Cleaning for Less than 1 PPM Chlorine/Fluorine	
Special certifications		
Calibration certification		
Standard		**Standard**
Q4	Calibration Certificate	★
QP	Calibration certificate with tamper evident seal	★
Material traceability certification		
Standard		**Standard**
Q8	Material traceability certification per EN 10204 3.1	★

Table 8. Rosemount 3051SAL Transmitter for ERS Applications ordering information

★ The Standard offering represents the most common options. The starred options (★) should be selected for best delivery.

The Expanded offering is subject to additional delivery lead time.

Quality certification for safety		
Standard		**Standard**
QS	Prior-use certificate of FMEDA Data	★
Toolkit performance reports		
Standard		**Standard**
QZ(13)	Remote Seal System Performance Calculation Report	★
Transient protection		
Standard		**Standard**
T1(7)	Transient Terminal Block	★
NACE Certificate		
Standard		**Standard**
Q15(14)	Certificate of Compliance to NACE MR0175/ISO 15156 for wetted materials	★
Q25(14)	Certificate of Compliance to NACE MR0103 for wetted materials	★
Typical model number: 3051SAL 1 P G 4A A 1A 1 0 20 D FF 7 1 DA 0 0 M5		

(1) For detailed specifications see "Specifications" on page -81.

(2) At ambient pressure of 14.7 psia (1 bar-a) and ambient temperature of 70°F (21°C). Temperature limits are reduced in vacuum service and may be limited by seal selection.

(3) Maximum process temperature is limited by heat transfer to the transmitter electronics and must be further derated if ambient temperature exceeds 70 °F (21 °C).

(4) This is a food grade fill fluid.

(5) Not suitable for vacuum applications.

(6) The pressure range should be specified based on the maximum static pressure, not differential pressure.

(7) Not available with Configuration Type code S.

(8) This assembly is included with options E1, N1, K1, ND, E4, E7, N7, K7, E2, KA, KC, KD, K2, and T1.

(9) Not available with M20 or G½ conduit entry size.

(10) Silicone fill fluid is standard.

(11) Bolts are not considered process wetted. In instances where NACE MR0175/ISO 15156 and NACE MR0103 conformance is required for bolting, L7 is the recommended bolting option.

(12) See the 3051S Reference Manual (document number 00809-0100-4801) for cable requirements. Contact an Emerson Process Management representative for additional information.

(13) The QZ report quantifies the performance of the entire ERS system. One report is provided per ERS system. The QZ option is specified on the Primary Transmitter (Configuration Type code P).

(14) Materials of construction comply with metallurgical requirements highlighted within NACE MR 0175 / ISO 15156 for sour oil field production environments. Environmental limits apply to certain materials. Consult latest standard for details. Selected materials also conform to NACE MR 0103 for sour refining environments.

Rosemount 3051S Scalable™ Level Transmitter



3051SAL In-Line with "FF" Flanged Seal



3051SAL Coplanar with "SS" Hygienic Tank Spud Seal



Tuned-System Assembly Comprised of 3051SAL with 1199 Flanged Seal

Rosemount 3051S Level Transmitters combine the features and benefits of a high-performance 3051S pressure transmitter with the durability and reliability of a direct mount seal all in a single model number.

Level transmitters can also be ordered with an additional 1199 Remote Mount Seal to form a Tuned-System Assembly that offers improved performance and reduced costs compared to traditional symmetrical (balanced) assemblies.

Product features and capabilities include:

- Variety of process connections including flanged, threaded, and hygienic seals
- Quantified performance for the entire transmitter / seal assembly (QZ option)
- HART, FOUNDATION fieldbus, and Wireless protocols

Additional information

Specifications: page 81

Dimensional drawings: page 111

Rosemount 3051SAL Scalable Level Transmitter

A 3051SAL Scalable Level Transmitter consists of 3 parts. First, specify the transmitter model codes found on page 63. Then, specify a direct mount seal found on page 71. Finish the model number by specifying all desired options on page 66.

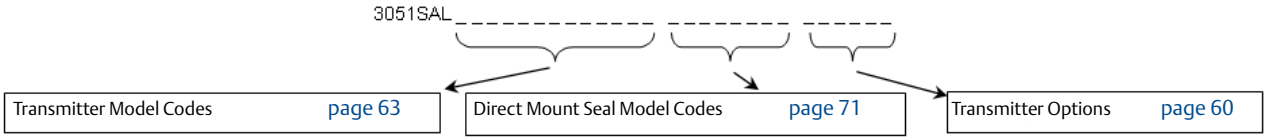

Table 9. Rosemount 3051SAL Scalable Level Transmitter ordering information

★ The Standard offering represents the most common options. The starred options (★) should be selected for best delivery.

The Expanded offering is subject to additional delivery lead time.

Model	Transmitter type		
3051SAL	Scalable Level Transmitter		
Performance class[1]			
Standard			**Standard**
1	Ultra: 0.055% span accuracy, 150:1 rangedown, 15-year limited warranty		★
2	Classic: 0.065% span accuracy, 150:1 rangedown		★
Configuration type			
Standard			**Standard**
C	Liquid Level Transmitter		★
Pressure module type		**Pressure sensor type**	
Standard			**Standard**
D	Coplanar	Differential	★
G	Coplanar	Gage	★
T	In-Line	Gage	★
E	In-Line	Absolute	★
Expanded			**Expanded**
A	Coplanar	Absolute	

Table 9. Rosemount 3051SAL Scalable Level Transmitter ordering information

★ **The Standard offering represents the most common options. The starred options (★) should be selected for best delivery.**
The Expanded offering is subject to additional delivery lead time.

Pressure range						
	Coplanar DP	**Coplanar gage**	**In-line gage**	**In-line absolute**	**Coplanar absolute**	
Standard						**Standard**
1A	N/A	N/A	-14.7 to 30 psig (-1,0 to 2,06 bar)	0 to 30 psia (0 to 2,06 bar)	0 to 30 psia (0 to 2,06 bar)	★
2A	-250 to 250 inH2O (-623 to 623 mbar)	-250 to 250 inH2O (-623 to 623 mbar)	-14.7 to 150 psig (-1,0 to 10,3 bar)	0 to 150 psia (0 to 10,34 bar)	0 to 150 psia (0 to 10,34 bar)	★
3A	-1000 to 1000 inH2O (-2,5 to 2,5 bar)	-393 to 1000 inH2O (-0,98 to 2,5 bar)	-14.7 to 800 psig (-1,0 to 55,2 bar)	0 to 800 psia (0 to 55,2 bar)	0 to 800 psia (0 to 55,2 bar)	★
4A	-300 to 300 psi (-20,7 to 20,7 bar)	-14.2 to 300 psig (-0,98 to 20,7 bar)	-14.7 to 4000 psig (-1,0 to 275,8 bar)	0 to 4000 psia (0 to 275,8 bar)	0 to 4000 psia (0 to 275,8 bar)	★
5A	-2000 to 2000 psi (-137,9 to 137,9 bar)	-14.2 to 2000 psig (-0,98 to 137,9 bar)	-14.7 to 10000 psig (-1,0 to 689 bar)	0 to 10000 psia (0 to 689 bar)	N/A	★

Transmitter output		
Standard		**Standard**
A	4-20 mA with digital signal based on HART protocol	★
F[2]	FOUNDATION fieldbus protocol	★
X[3]	Wireless (Requires wireless options and wireless PlantWeb housing)	★

Housing style		**Material**	**Conduit entry**	
Standard				**Standard**
1A	PlantWeb housing	Aluminum	1/2–14 NPT	★
1B	PlantWeb housing	Aluminum	M20 x 1.5	★
1J	PlantWeb housing	SST	1/2–14 NPT	★
1K	PlantWeb housing	SST	M20 x 1.5	★
2A	Junction Box housing	Aluminum	1/2–14 NPT	★
2B	Junction Box housing	Aluminum	M20 x 1.5	★
2E	Junction Box with output for remote interface	Aluminum	1/2–14 NPT	★
2F	Junction Box with output for remote interface	Aluminum	M20 x 1.5	★
2J	Junction Box housing	SST	1/2–14 NPT	★
5A[4]	Wireless PlantWeb housing	Aluminum	1/2–14 NPT	★
5J[4]	Wireless PlantWeb housing	SST	1/2–14 NPT	★
7J[5]	Quick Connect (A size Mini, 4-pin male termination)	SST		★
Expanded				**Expanded**
1C	PlantWeb housing	Aluminum	G1/2	
1L	PlantWeb housing	316L SST	G1/2	
2C	Junction Box housing	Aluminum	G1/2	
2G	Junction Box with output for remote interface	Aluminum	G1/2	

Direct-mount extension (between transmitter flange and seal)		
Standard		**Standard**
10	No Extension	★
12	2-in. (50 mm) Extension	★
14	4-in. (100 mm) Extension	★
15[4]	Thermal Optimizer	★

Transmitter reference pressure connection		
Standard		**Standard**
00	None (Inline Module Type Only)	★
10[6]	Tuned-System Assembly, One Capillary Remote Seal (Requires separate 1199 model number)	★
20	316 L SST Isolator with SST Transmitter Flange	★
30	Alloy C-276 Isolator with SST Transmitter Flange	★

Table 9. Rosemount 3051SAL Scalable Level Transmitter ordering information

★ The Standard offering represents the most common options. The starred options (★) should be selected for best delivery.
The Expanded offering is subject to additional delivery lead time.

Seal fill fluid		Specific gravity at 77 °F (25 °C)	Temperature limits[7]				
			No extension	2-in. (50 mm) extension	4-in. (100 mm) extension	Thermal optimizer	
Standard							**Standard**
D	Silicone 200	0.93	-49 to 401 °F (-45 to 205 °C)	-49 to 401 °F (-45 to 205 °C)	-49 to 401 °F (-45 to 205 °C)	-49 to 401 °F (-45 to 205 °C)	★
C	Silicone 704	1.07	32 to 401 °F (0 to 205 °C)[8]	32 to 464 °F (0 to 240 °C)[8]	32 to 500 °F (0 to 260 °C)[8]	32 to 599 °F (0 to 315 °C)	★
V	Silicone 705	1.09	68 to 401 °F (20 to 205 °C)[8]	68 to 464 °F (20 to 240 °C)[8]	68 to 500 °F (20 to 260 °C)[8]	68 to 698 °F (20 to 370 °C)[8]	★
A	Syltherm XLT	0.85	-102 to 293 °F (-75 to 145 °C)	-102 to 293 °F (-75 to 145 °C)	102 to 293 °F (-75 to 145 °C)	102 to 293 °F (-75 to 145 °C)	★
H	Inert (Halocarbon)	1.85	-49 to 320 °F (-45 to 160 °C)	-49 to 320 °F (-45 to 160 °C)	-49 to 320 °F (-45 to 160 °C)	-49 to 320 °F (-45 to 160 °C)	★
G[9][10]	Glycerine and Water	1.13	5 to 203 °F (-15 to 95 °C)	5 to 203 °F (-15 to 95 °C)	5 to 203 °F (-15 to 95 °C)	5 to 203 °F (-15 to 95 °C)	★
N[9]	Neobee M-20	0.92	5 to 401 °F (-15 to 205 °C)[8]	5 to 437 °F (-15 to 225 °C)	5 to 437 °F (-15 to 225 °C)	5 to 437 °F (-15 to 225 °C)	★
P[9][10]	Propylene Glycol and Water	1.02	5 to 203 °F (-15 to 95 °C)	5 to 203 °F (-15 to 95 °C)	5 to 203 °F (-15 to 95 °C)	5 to 203 °F (-15 to 95 °C)	★

Continue specifying a completed model number by choosing a remote seal type below:

	page 71	FF Flush Flanged Seal	Process Connections: 2 in. / DN 50 / 50A 3 in. / DN 80 / 80A 4 in. / DN 100 / 100A
	page 73	EF Extended Flanged Seal	Process Connections: 3 in. / DN 80 / 80A 4 in. / DN 100 / 100A
	page 74	RF Remote Flanged Seal	Process Connections: 1 in. / DN 25 / 25A 1.5 in. / DN 40 / 40A
	page 76	RT Remote Threaded Seal	Process Connections: ¼ - 18 NPT ½ - 14 NPT ¾ - 14 NPT 1 – 11.5 NPT
	page 78	SC Hygienic Tri-Clamp Seal	Process Connections: 1.5 in. 2 in. 3 in.
	page 79	SS Hygienic Tank Spud Seal	Process Connections: 4 in.

Table 9. Rosemount 3051SAL Scalable Level Transmitter ordering information

★ **The Standard offering represents the most common options. The starred options (★) should be selected for best delivery. The Expanded offering is subject to additional delivery lead time.**

Wireless options (requires option code X and wireless PlantWeb housing)

Update rate		
Standard		**Standard**
WA[4]	User Configurable Update Rate	★
Operating frequency and protocol		
Standard		**Standard**
3	2.4 GHz DSSS, IEC 62591 (*Wireless*HART)	★
Omnidirectional wireless antenna		
Standard		**Standard**
WK[4]	External Antenna	★
WM[4]	Extended Range, External Antenna	★
Expanded		**Expanded**
WN	High-Gain, Remote Antenna	
SmartPower™		
Standard		**Standard**
1[11][12]	Adapter for Black Power Module (I.S. Power Module Sold Separately)	★

Other options (include with selected model number)

PlantWeb control functionality		
Standard		**Standard**
A01[12][13][14]	FOUNDATION fieldbus Advanced Control Function Block Suite	★
Hardware adjustments		
Standard		**Standard**
D01[12][13]	FOUNDATION fieldbus Diagnostics Suite	★
DA2[15]	Advanced HART Diagnostics Suite	★
Software configuration		
Standard		**Standard**
C1[16]	Custom software configuration (Requires Configuration Data Sheet)	★
Gage pressure calibration		
Standard		**Standard**
C3	Gage pressure calibration on Rosemount 3051SAL_ _A4 only	★
Alarm limit		
Standard		**Standard**
C4[13][16]	NAMUR alarm and saturation levels, high alarm	★
C5[13][16]	NAMUR alarm and saturation levels, low alarm	★
C6[13][16]	Custom alarm and saturation signal levels, high alarm (Requires C1 and Configuration Data Sheet)	★
C7[13][16]	Custom alarm and saturation signal levels, low alarm (Requires C1 and Configuration Data Sheet)	★
C8[13][16]	Low alarm (standard Rosemount alarm and saturation levels)	★
Hardware adjustments		
Standard		**Standard**
D1[13][16][17]	Hardware adjustments (zero, span, alarm, security)	★
Flange adapter		
Standard		**Standard**
D2	1/2-14 NPT flange adapter	★
Expanded		
D9	RC 1/2 SST flange adapter	

Table 9. Rosemount 3051SAL Scalable Level Transmitter ordering information

★ The Standard offering represents the most common options. The starred options (★) should be selected for best delivery.
The Expanded offering is subject to additional delivery lead time.

Ground screw		
Standard		**Standard**
D4[18]	External ground screw assembly	★
Drain/vent valve		
Standard		**Standard**
D5	Delete transmitter drain/vent valves (install plugs)	★
Conduit plug		
Standard		**Standard**
DO[19]	316 SST Conduit Plug	★
Product certifications[20]		
Standard		**Standard**
E1	ATEX Flameproof	★
I1	ATEX Intrinsic Safety	★
IA	ATEX FISCO Intrinsic Safety (FOUNDATION fieldbus protocol only)	★
N1	ATEX Type n	★
K1	ATEX Flameproof, Intrinsic Safety, Type n, Dust	★
ND	ATEX Dust	★
E4	TIIS Flameproof	★
E5	FM Explosion-proof, Dust Ignition-proof	★
I5	FM Intrinsically Safe; Nonincendive	★
IE	FM FISCO Intrinsically Safe (FOUNDATION fieldbus protocol only)	★
K5	FM Explosion-proof, Dust Ignition-proof, Intrinsically Safe, Division 2	★
E6[21]	CSA Explosion-proof, Dust Ignition-proof, Division 2	★
I6	CSA Intrinsically Safe	★
IF	CSA FISCO Intrinsically Safe (FOUNDATION fieldbus protocol only)	★
K6[21]	CSA Explosion-proof, Dust Ignition-proof, Intrinsically Safe, Division 2	★
D3[22]	Measurement Canada Accuracy Approval	★
E7	IECEx Flameproof, Dust Ignition-proof	★
I7	IECEx Intrinsic Safety	★
IG	IECEx FISCO Intrinsic Safety (FOUNDATION fieldbus protocol only)	★
N7	IECEx Type n	★
K7	IECEx Flameproof, Dust Ignition-proof, Intrinsic Safety, Type n	★
E2	INMETRO Flameproof	★
I2	INMETRO Intrinsic Safety	★
IB	INMETRO FISCO Intrinsic Safety	★
K2	INMETRO Flameproof, Intrinsic Safety	★
E3	China Flameproof	★
I3	China Intrinsic Safety, Dust Ignition-proof	★
KA[21]	ATEX and CSA Flameproof, Intrinsically Safe, Division 2	★
KB[21]	FM and CSA Explosion-proof, Dust Ignition-proof, Intrinsically Safe, Division 2	★
KC	FM and ATEX Explosion-proof, Intrinsically Safe, Division 2	★
KD[21]	FM, CSA, and ATEX Explosion-proof, Intrinsically Safe	★
Sensor fill fluid		
Standard		**Standard**
L1[23]	Inert sensor fill fluid	★
O-ring		
Standard		**Standard**
L2	Graphite-filled PTFE o-ring	★

Table 9. Rosemount 3051SAL Scalable Level Transmitter ordering information

★ **The Standard offering represents the most common options. The starred options (★) should be selected for best delivery. The Expanded offering is subject to additional delivery lead time.**

Bolting material		
Standard		**Standard**
L4	Austenitic 316 SST bolts	★
L5[24]	ASTM A193, Grade B7M bolts	★
L6	Alloy K-500 bolts	★
L7 [24]	ASTM A453, Class D, Grade 660 bolts	★
L8	ASTM A193, Class 2, Grade B8M bolts	★
Display type[25]		
Standard		**Standard**
M5[13][26][27]	PlantWeb LCD display	★
M7[13][26]	Remote mount LCD display and interface, PlantWeb housing, no cable, SST bracket	★
M8[13][26]	Remote mount LCD display and interface, PlantWeb housing, 50 ft. (15 m) cable, SST bracket	★
M9[13][26]	Remote mount LCD display and interface, PlantWeb housing, 100 ft. (31 m) cable, SST bracket	★
Pressure testing		
Expanded		**Expanded**
P1	Hydrostatic testing with certificate	
Special cleaning		
Expanded		**Expanded**
P2	Cleaning for special services	
P3	Cleaning for less than 1PPM Chlorine/Fluorine	
Calibration certification		
Standard		**Standard**
Q4	Calibration certificate	★
QP	Calibration certificate and tamper evident seal	★
Material traceability certification		
Standard		**Standard**
Q8	Material traceability certification per EN 10204 3.1	★
Quality certification for safety		
Standard		**Standard**
QS[13][16]	Prior-use certificate of FMEDA Data	★
QT[28]	Safety-certified to IEC 61508 with certificate of FMEDA data	★
Drinking water approval		
Standard		**Standard**
DW	NSF drinking water certification	★
Toolkit performance reports		
Standard		**Standard**
QZ	Remote Seal System Performance Calculation Report	★
Transient protection		
Standard		**Standard**
T1[29][30]	Transient terminal block	★
Conduit electrical connector		
Standard		**Standard**
GE[31]	M12, 4-pin, Male Connector (*eurofast*)	★
GM[31]	A size Mini, 4-pin, Male Connector (*minifast*)	★

Table 9. Rosemount 3051SAL Scalable Level Transmitter ordering information

★ The Standard offering represents the most common options. The starred options (★) should be selected for best delivery.

The Expanded offering is subject to additional delivery lead time.

NACE Certificate		
Standard		**Standard**
Q15[24]	Certificate of Compliance to NACE MR0175/ISO 15156 for wetted materials	★
Q25[24]	Certificate of Compliance to NACE MR0103 for wetted materials	★
Typical model number: 3051SAL 1 C G 2A A 1A 10 20 D FF G 1 DA 0 0		

(1) For detailed specifications see "Specifications" on page -81.

(2) Requires PlantWeb housing.

(3) Only intrinsically safe approval codes apply.

(4) Only available with output code X.

(5) Available with output code A only. Available approvals are FM Intrinsically Safe; Nonincendive (option code I5), CSA Intrinsically Safe (option code I6), ATEX Intrinsic Safety (option code I1), or IECEx Intrinsic Safety (option code I7). Contact an Emerson Process Management representative for additional information.

(6) With option code 10, user must select Seal Location option code M in Table 7 of Rosemount DP Level PDS.

(7) At ambient pressure of 14.7 psia (1 bar-a) and ambient temperature of 70 °F (21 °C). Temperature limits are reduced in vacuum service and may be limited by seal selection.

(8) Maximum process temperature is limited by heat transfer to the transmitter and must be further derated if ambient temperature exceeds 70 °F (21 °C). See "Temperature Limits" on page -65 for more information.

(9) This is a food grade fill fluid.

(10) Not suitable for vacuum applications.

(11) Long-Life Power Module must be shipped separately, order Power Module 701PBKKF.

(12) Not available with output code A.

(13) Not available with output code X.

(14) With option code 10, user must select Seal Location option code M in Table 7 of Rosemount DP Level PDS.

(15) Requires PlantWeb housing and Output code A. Includes Hardware Adjustments as standard.

(16) Not available with output code F.

(17) Not available with housing style codes 2E, 2F, 2G, 2M, 5A, 5J, or 7J.

(18) This assembly is included with options E1, N1, K1, ND, E4, E7, N7, K7, E2, E3, KA, KC, KD. IA, IB, IE. IF, IG, K2, and T1.

(19) Transmitter is shipped with 316 SST conduit plug (uninstalled) in place of carbon steel conduit plug.

(20) Valid when SuperModule Platform and housing have equivalent approvals.

(21) Not available with M20 or G ½ conduit entry size.

(22) Requires PlantWeb housing and Hardware Adjustments option code D1. Limited availability depending on transmitter type and range. Contact an Emerson Process Management representative for additional information.

(23) Silicone fill fluid is standard.

(24) Materials of construction comply with metallurgical requirements highlighted within NACE MR0175 / ISO 15156 for sour oil field production environments. Environmental limits apply to certain materials. Consult latest standard for details. Selected materials also conform to NACE MR0103 for sour refining environments. Order with Q15 or Q25 to receive a NACE certificate.

(25) Not available with Housing code 01 or 7J.

(26) Not available with output code F, option code DA2, or option code QT.

(27) See the 3051S Reference Manual (document number 00809-0100-4801) for cable requirements. Contact an Emerson Process Management representative for additional information.

(28) Not available with output code F or X. Not available with housing code 7J.

(29) Not available with Housing code 5A, 5J, or 7J.

(30) The T1 option is not needed with FISCO Product Certifications; transient protection is included in the FISCO product certification codes IA, IB, IE, IF, and IG.

(31) Not available with Housing code 5A, 5J, or 7J. Available with Intrinsically Safe approvals only. For FM Intrinsically Safe; Nonincendive (option code I5) or FM FISCO Intrinsically Safe (option code IE), install in accordance with Rosemount drawing 03151-1009.

Direct mount seals for 3051SAL



Flush Flanged (FF) Seal

- Most common seal
- Good for use in general applications
- Easy installation on flanged connections ranging from 2-in. (DN 50) to 4-in. (DN 100)

Table 10. Flush Flanged (FF) Seal ordering information

★ The Standard offering represents the most common options. The starred options (★) should be selected for best delivery.
The Expanded offering is subject to additional delivery lead time.

Model	Process connection			
FF	Flush Flanged Seal			
Process connection size				
Standard				**Standard**
G	2-in. / DN 50 / 50A			★
7	3-in. / 80A			★
J	DN 80			★
9	4-in. / DN 100 / 100A			★
Flange / pressure rating				
Standard				**Standard**
1	ANSI/ASME B16.5 Class 150			★
2	ANSI/ASME B16.5 Class 300			★
4	ANSI/ASME B16.5 Class 600			★
G	PN 40 per EN 1092-1			★
Expanded				**Expanded**
A	10K per JIS B2238			
B	20K per JIS B2238			
D	40K per JIS B2238			
E	PN 10/16 per EN 1092-1, Available with DN 100 only			
Materials of construction				
	Isolating diaphragm	**Upper housing**	**Flange**	
Standard				**Standard**
CA	316L SST	316L SST	CS	★
DA	316L SST	316L SST	316 SST	★
CB[(1)]	Alloy C-276	316L SST	CS	★
DB[(1)]	Alloy C-276	316L SST	316 SST	★
CC	Tantalum	316L SST	CS	★
DC	Tantalum	316L SST	316 SST	★
Flushing connection ring (lower housing)[(2)]				
Standard				**Standard**
0	None			★
A	316 SST			★
B	Alloy C-276			★
Flushing connection quantity & size				
Standard				**Standard**
0	None			★
1	One 1/4-18 NPT Flushing Connection			★
3	Two 1/4-18 NPT Flushing Connections			★
7	One 1/2-14 NPT Flushing Connection			★
9	Two 1/2-14 NPT Flushing Connections			★

Table 10. Flush Flanged (FF) Seal ordering information

★ The Standard offering represents the most common options. The starred options (★) should be selected for best delivery.
The Expanded offering is subject to additional delivery lead time.

Options (include with selected model number)

Cold temperature remote seal applications		
Expanded		**Expanded**
SB	Extra Fill Fluid for Cold Temperature Applications	
Remote seal diaphragm thickness		
Expanded		**Expanded**
SC(3)	0.006-in. (150 µm) Diaphragm Thickness	
Flushing connection ring plugs		
Standard		**Standard**
SD	Alloy C-276 Plug(s) for Flushing Connection(s)	★
SG	SST Plug(s) for Flushing Connection(s)	★
SH	SST Drain / Vent(s) for Flushing Connection(s)	★
Flushing connection ring gaskets		
Expanded		**Expanded**
SJ	PTFE Gasket	
SK	Barium Sulfate-Filled PTFE Gasket	
SN	Grafoil Gasket	
Additional options		
Remote seal diaphragm coating		
Expanded		**Expanded**
SZ(3)	0.0002-in. (5 µm) Gold Plated Diaphragm	
SV	PTFE Coated Diaphragm for Non-Stick Purposes	

Complete the 3051SAL model number by specifying options as needed:

page 60	ERS Transmitter Options	
page 66	Scalable Level Transmitter Options	

(1) Not available with option code SC.

(2) Supplied with Thermo Tork TN9000 gasket if no other flushing connection ring gasket option is selected.

(3) Not available with Tantalum diaphragms (Material of Construction codes CC and DC).



Extended Flanged (EF) Seal

- Good for use in viscous applications with plugging issues
- Seal diaphragm installed flush with inner tank wall to prevent process plugging
- Easy installation on 3-in. (DN 80) and 4-in. (DN 100) flanged connections

Table 11. Extended Flanged (EF) Seal ordering information

★ The Standard offering represents the most common options. The starred options (★) should be selected for best delivery.
The Expanded offering is subject to additional delivery lead time.

Model	Process connection			
EF	Extended Flanged Seal			
Process connection size				
Standard				**Standard**
7	3-in. / DN 80 / 80A			★
9	4-in. / DN 100 / 100A			★
Flange / pressure rating				
Standard				**Standard**
1	ANSI/ASME B16.5 Class 150			★
2	ANSI/ASME B16.5 Class 300			★
4	ANSI/ASME B16.5 Class 600			★
G	PN 40 per EN 1092-1			★
Expanded				**Expanded**
A	10K per JIS B2238			
B	20K per JIS B2238			
D	40K per JIS B2238			
E	PN 10/16 per EN 1092-1, Available with DN 100 only			
Materials of construction				
	Isolating diaphragm	**Extension / gasket surface**	**Mounting flange**	
Standard				**Standard**
CA	316L SST	316L SST	CS	★
DA	316L SST	316L SST	316 SST	★
CB	Alloy C-276	Alloy C-276	CS	★
DB	Alloy C-276	Alloy C-276	316 SST	★
Seal extension length				
Standard				**Standard**
20	2-in. (50 mm)			★
40	4-in. (100 mm)			★
60	6-in. (150 mm)			★

Options (include with selected model number)

Cold temperature remote seal applications		
Standard		**Standard**
SB	Extra Fill Fluid for Cold Temperature Applications	★
Remote seal diaphragm thickness		
Expanded		**Expanded**
SC	0.006-in. (150 µm) Diaphragm Thickness	
Remote seal diaphragm coating		
Expanded		**Expanded**
SZ	0.0002-in. (5 µm) Gold Plated Diaphragm	
SV	PTFE Coated Diaphragm for Non-Stick Purposes	

Complete the 3051SAL model number by specifying options as needed:

page 60	ERS Transmitter Options	
page 66	Scalable Level Transmitter Options	



Remote Flanged (RF) Seal

- Designed to improve performance on smaller process connections
- Easy installation on flanged connections ranging from 1-in. to 1.5-in. (DN 50 – DN 40)
- Lower housing / flushing ring required

Table 12. Remote Flanged (RF) Seal ordering information

★ The Standard offering represents the most common options. The starred options (★) should be selected for best delivery.
The Expanded offering is subject to additional delivery lead time.

Model	Process connection			
RF	Remote Flanged Seal			
Process connection size				
Standard				**Standard**
2	1-in. / 25A			★
4	1.5-in. / 40A			★
D	DN 25			★
F	DN 40			★
Flange / pressure rating				
Standard				**Standard**
1	ANSI/ASME B16.5 Class 150			★
2	ANSI/ASME B16.5 Class 300			★
4	ANSI/ASME B16.5 Class 600			★
G	PN 40 per EN 1092-1			★
Expanded				**Expanded**
A	10K per JIS B2238			
B	20K per JIS B2238			
D	40K per JIS B2238			
Materials of construction				
	Isolating diaphragm	**Upper housing**	**Flange**	
Standard				**Standard**
CA	316L SST	316L SST	CS	★
DA	316L SST	316L SST	316 SST	★
CB	Alloy C-276	316L SST	CS	★
DB	Alloy C-276	316L SST	316 SST	★
CC	Tantalum	316L SST	CS	★
DC	Tantalum	316L SST	316 SST	★
Flushing connection ring material (lower housing)[(1)]				
Standard				**Standard**
A	316L SST			★
B	Alloy C-276			★
D	Plated CS			★
Number of flushing connections				
Standard				**Standard**
1	One ¼-18 NPT Flushing Connection			★
3	Two ¼-18 NPT Flushing Connections			★
5	None			★

Options (include with selected model number)

Cold temperature remote seal application		
Standard		**Standard**
SB	Extra Fill Fluid for Cold Temperature Applications	★

Table 12. Remote Flanged (RF) Seal ordering information

★ The Standard offering represents the most common options. The starred options (★) should be selected for best delivery.
The Expanded offering is subject to additional delivery lead time.

Remote seal diaphragm thickness		
Expanded		**Expanded**
SC[2]	0.006-in. (150 µm) Diaphragm Thickness	
Remote seal flushing connection plug, drain/vent		
Standard		**Standard**
SD	Alloy C-276 Plug(s) for Flushing Connection(s)	★
SG	316 SST Plug(s) for Flushing Connection(s)	★
SH	316 SST Drain / Vent(s) for Flushing Connection(s)	★
Remote seal gasket material		
Standard		**Standard**
SJ	PTFE Gasket (for use with Flushing Connection Ring)	★
Expanded		**Expanded**
SK	Barium Sulfate-Filled PTFE Gasket (for use with Flushing Connection Ring)	
SN	Grafoil Gasket (for use with Flushing Connection Ring)	
Remote seal diaphragm coating		
Expanded		**Expanded**
SZ[2]	0.0002-in. (5 µm) Gold Plated Diaphragm	
SV	PTFE Coated Diaphragm for Non-Stick Purposes	

Complete the 3051SAL model number by specifying options as needed:

page 60	ERS Transmitter Options	
page 66	Scalable Level Transmitter Options	

(1) Supplied with C4401 Aramid fiber gasket if no other remote seal gasket material is selected.

(2) Not available with Tantalum diaphragms (Material of Construction codes CC and DC).



Remote Threaded (RT) Seal

- For use with threaded process connections (1/4-18 to 1-11.5 NPT)
- Rated for use in high-pressure applications (up to 2500 PSI)
- Optional flushing connections available

Table 13. RT Threaded Seal ordering information

★ The Standard offering represents the most common options. The starred options (★) should be selected for best delivery.
The Expanded offering is subject to additional delivery lead time.

Process connection style				
Standard				**Standard**
RT	Remote Threaded Seal			★
Process connection size				
Standard				**Standard**
3	1/2-14 NPT			★
4	3/4-14 NPT			★
5	1-11.5 NPT			★
Expanded				**Expanded**
1	1/4-18 NPT			
Pressure rating				
Standard				**Standard**
0	2500 psi			★
Isolating diaphragm material		**Upper housing material**	**Flange**	
Standard				**Standard**
CA	316L SST	316L SST	CS	★
DA	316L SST	316L SST	316 SST	★
CB	Alloy C-276	316L SST	CS	★
DB	Alloy C-276	316L SST	316 SST	★
CC	Tantalum	316L SST	CS	★
DC	Tantalum	316L SST	316 SST	★
Flushing connection ring material (lower housing)[(1)(2)]				
Standard				**Standard**
A	316L SST			★
B	Alloy C-276			★
Expanded				**Expanded**
D	Plated CS			
Number of flushing connections				
Standard				**Standard**
1	One 1/4-in. Flushing Connection			★
3	Two 1/4-in. Flushing Connections			★
5	None			★

Options (include with selected model number)

Cold temperature remote seal application		
Standard		**Standard**
SB	Extra Fill Fluid for Cold Temperature Applications	★
Remote seal diaphragm thickness		
Expanded		**Expanded**
SC[(3)]	0.006-in. (150 µm) Diaphragm Thickness	

Table 13. RT Threaded Seal ordering information

★ The Standard offering represents the most common options. The starred options (★) should be selected for best delivery.
The Expanded offering is subject to additional delivery lead time.

Remote seal flushing plug, drain/vent		
Standard		**Standard**
SD	Alloy C-276 Plug(s) for Flushing Connection(s)	★
SG	316 SST Plug(s) for Flushing Connection(s)	★
SH	316 SST Drain / Vent(s) for Flushing Connection(s)	★
Remote seal gasket material		
Standard		**Standard**
SJ	PTFE Gasket (for use with Flushing Connection Ring)	★
SN	Grafoil Gasket (for use with Flushing Connection Ring)	★
SR	Ethylene Propylene Gasket (for use with Flushing Connection Ring)	★
Expanded		**Expanded**
SK	Barium Sulfate-Filled PTFE Gasket (for use with Flushing Connection Ring)	
Remote seal bolt		
Standard		**Standard**
S3	304 SST Bolts	★
Expanded		**Expanded**
S4	316 SST Bolts	
Remote seal diaphragm coating		
Expanded		**Expanded**
SZ(3)	0.0002-in. (5 µm) Gold Plated Diaphragm	
SV	PTFE Coated Diaphragm for Non-Stick Purposes	

Complete the 3051SAL model number by specifying options as needed:

page 60	ERS Transmitter Options	
page 66	Scalable Level Transmitter Options	

(1) Supplied with C4401 aramid fiber gasket if no other remote seal gasket material is selected.

(2) Flushing Connection Ring/ Lower Housing assembly bolts provided as standard are carbon steel.

(3) Not available with Tantalum diaphragms (Material of Construction codes CC and DC).



Hygienic Tri-Clamp (SC) Seal

- Good for use in hygienic applications
- Easy installation on Tri-Clover style Tri-Clamp® connections (1.5-in. to 3-in.)
- Conforms to 3-A standard 74-03

Table 14. SC Hygienic Tri-Clover Style Tri-Clamp Seal ordering information

★ The Standard offering represents the most common options. The starred options (★) should be selected for best delivery.
The Expanded offering is subject to additional delivery lead time.

Process connection			
Standard			**Standard**
SC[(1)]	Tri-Clover Style Tri-Clamp Seal		★
Process connection size			
Standard			**Standard**
3[(2)(3)]	1½ in.		★
5[(2)(4)]	2 in.		★
7	3 in.		★
Maximum working pressure			
Standard			**Standard**
0	1000 PSI		★
Isolating diaphragm material		**Upper housing material**	
Standard			**Standard**
LA00	316L SST	316L SST	★
Expanded			**Expanded**
LB00	Alloy C-276	316L SST	

Options (include with selected model number)

Remote seal diaphragm polishing		
Expanded		**Expanded**
R6	Electropolishing	
Remote seal diaphragm surface finish		
Expanded		**Expanded**
RD	10 µin. (0.25 µm) R_a Diaphragm Surface Finish	
RG	15 µin. (0.375 µm) R_a Diaphragm Surface Finish	
RH	20 µin. (0.5 µm) R_a Diaphragm Surface Finish	
Surface finish certification		
Standard		**Standard**
Q16[(5)]	Surface Finish Certification for Hygienic Remote Seals	★

Complete the 3051SAL model number by specifying options as needed:

page 60	ERS Transmitter Options
page 66	Scalable Level Transmitter Options

(1) Clamp and gasket furnished by user. The maximum working pressure is dependent upon the clamp pressure rating.

(2) Consult factory for calibrated spans lower than 5 psi (345 mbar).

(3) Rosemount 1199 Remote Seal Minimum Span Summary calls out a minimum span of 1000 inH2O or 2490 mbar for 1-1/2" SSCW.

(4) Rosemount 1199 Remote Seal Minimum Span Summary calls out a minimum span of 150 inH2O or 373 mbar for 2" SSCW.

(5) Q16 is only available when the diaphragm seal has surface finish options (RD, RG, and RH).



Hygienic Tank Spud (SS) Seal

- Commonly used in hygienic level applications
- Seal diaphragm installed flush with inner tank wall
- Conforms to 3-A standard 74-03

Table 15. SS Hygienic Tank Spud Seal ordering information

★ The Standard offering represents the most common options. The starred options (★) should be selected for best delivery.
The Expanded offering is subject to additional delivery lead time.

Process connection			
Standard			**Standard**
SS[1]	Hygienic Tank Spud Seal		★
Process connection size			
Standard			**Standard**
A	4-in. Sch. 5 Tri-Clamp		★
Maximum working pressure (clamp rating)			
Standard			**Standard**
0	600 PSI (41 bar)		★
Upper housing			
Standard			**Standard**
A	316L SST		★
Diaphragm and wetted, extension material			
	Diaphragm and wetted	**Extension**	
Standard			**Standard**
AL	316L SST[2]	316L SST[2]	★
Expanded			**Expanded**
BB	Alloy C-276	316L SST	
Extension length			
Standard			**Standard**
2	2-in. (50 mm) Extension		★
6	6-in. (150 mm) Extension		★

Options (include with selected model number)

Remote seal diaphragm thickness		
Expanded		**Expanded**
SC	0.006-in. (150 µm) Diaphragm Thickness	
Tank spud included with shipment		
Standard		**Standard**
S1	Tank Spud Included with Shipment	★
Remote seal diaphragm polishing		
Expanded		**Expanded**
R6	Electropolishing	
Remote seal diaphragm surface finish		
Expanded		**Expanded**
RH	20 µin. (0.5 µm) R_a Diaphragm Surface Finish	
RG[3]	15 µin. (0.375 µm) R_a Diaphragm Surface Finish	

Table 15. SS Hygienic Tank Spud Seal ordering information

★ The Standard offering represents the most common options. The starred options (★) should be selected for best delivery.
The Expanded offering is subject to additional delivery lead time.

Additional options

Surface finish certification		
Standard		**Standard**
Q16[4]	Surface Finishing Certification for Hygienic Remote Seals	★

Complete the 3051SAL model number by specifying options as needed:

page 60	ERS Transmitter Options
page 66	Scalable Level Transmitter Options

(1) Clamp and Ethylene Propylene o-ring (conforms to 3-A standard 74 and USP class VI) supplied.

(2) Diaphragm brazed and TIG-welded to extension.

(3) Require Option code R6 (Electropolishing).

(4) Q16 is only available when the diaphragm seal has surface finish options (RG and RH).

Specifications

Performance specifications

For zero-based spans, reference conditions, silicone oil fill, glass-filled PTFE o-rings, SST materials, Coplanar flange (3051SMV, 3051S_C) or 1/2 in.- 14 NPT (3051S_T) process connections, digital trim values set to equal range points.

Conformance to specification (±3σ (Sigma))

Technology leadership, advanced manufacturing techniques, and statistical process control ensure pressure measurement specification conformance to ±3σ or better.

Reference accuracy

Stated reference accuracy equations include terminal based linearity, hysteresis, and repeatability.
For FOUNDATION fieldbus and wireless devices, use calibrated range in place of span.

Transmitter with coplanar sensor module (single variable)(1)

Differential pressure (3051S_CD, 3051SMV_ _ 3 or 4) Gage pressure (3051S_CG, 3051SAM_ _G(2))			
	Ultra	**Classic**	**Ultra for Flow(3)**
Ranges 2 - 4	±0.025% of span; For spans less than 10:1, ±[0.005 + 0.0035(URL / Span)]% of span	±0.035% of span; For spans less than 10:1, ±[0.015 + 0.005(URL / Span)]% of span	±0.04% of reading up to 8:1 DP turndown from URL; ±[0.04 + 0.0023(URL / Reading)]% of reading to 200:1 DP turndown from URL
Range 5	±0.05% of span; For spans less than 10:1, ±[0.005 + 0.0045(URL / Span)]% of span	±0.065% of span; For spans less than 10:1, ±[0.015 + 0.005(URL / Span)]% of span	Not Available
Range 1	±0.09% of span; For spans less than 15:1, ±[0.015 + 0.005(URL / Span)]% of span	±0.10% of span; For spans less than 15:1, ±[0.025 + 0.005(URL / Span)]% of span	Not Available
Range 0	±0.09% of span; For spans less than 2:1, ±0.045% of URL	±0.10% of span; For spans less than 2:1, ±0.05% of URL	Not Available
Absolute pressure (3051S_CA, 3051SAM_ _A(2))			
	Ultra	**Classic**	
Ranges 1 - 4	±0.025% of span; For spans less than 10:1, ±[0.004(URL / Span)]% of span	±0.035% of span; For spans less than 10:1, ±[0.0065(URL / Span)]% of span	
Range 0	±0.075% of span; For spans less than 5:1, ±[0.025 + 0.01(URL / Span)]% of span	±0.075% of span; For spans less than 5:1, ±[0.025 + 0.01(URL / Span)]% of span	

(1) For 3051S transmitters assembled to 1199 remote seals, use 3051SAL specifications.

(2) Specifications are for each gage / absolute pressure sensor of the ERS system and are not reflective of the DP calculation.

(3) Ultra for Flow is only available for 3051S_CD ranges 2-3. For calibrated spans from 1:1 to 2:1 of URL, add ±0.005% of span analog output error.

Transmitter with in-line sensor module[1]

Absolute pressure (3051S_TA, 3051SAM_ _E[2]) Gage pressure (3051S_TG, 3051SAM_ _T[2])		
	Ultra	**Classic**
Ranges 1 - 4	±0.025% of span For spans less than 10:1, ±[0.004(URL / Span)]% of span	±0.035% of span For spans less than 10:1, ±[0.0065(URL / Span)]% of span
Range 5:	±0.04% of span. For spans less than 10:1 ±0.004% of URL.	±0.065% of span. For spans less than 10:1 ±0.0065% of URL.

(1) For 3051S transmitters assembled to 1199 remote seals, use 3051SAL specifications.

(2) Specifications are for each gage / absolute pressure sensor of the ERS system and are not reflective of the DP calculation.

Transmitter with multivariable sensor module[1]

Differential pressure and static pressure (3051SMV_ _1 or 2)		
	Classic MV	**Ultra for Flow[2]**
DP Ranges 2-3	±0.04% of span For spans less than 10:1, ±[0.01 + 0.004(URL / Span)]% of span	±0.04% of reading up to 8:1 DP turndown from URL ±[0.04 + 0.0023(URL / Reading)]% of reading to 200:1 DP turndown from URL
DP Range 4	±0.055% of span For spans less than 10:1, ±[0.015 + 0.005(URL/Span)]% of span	±0.05% of reading up to 3:1 DP turndown from URL ±[0.05 + 0.0145(URL/RDG)]% of reading to 100:1 DP turndown from URL
DP Range 5	±0.065% of span For spans less than 10:1, ±[0.015 + 0.005(URL/Span)]% of span	Not Available
DP Range 1	±0.10% of span For spans less than 15:1, ±[0.025 + 0.005(URL / Span)]% of span	Not Available
AP & GP Ranges 3-4[3]	±0.055% of span For spans less than 10:1, ±[0.0065(URL / Span)]% of span	±0.025% of span For spans less than 10:1, ±[0.004(URL / Span)]% of span

(1) For 3051S transmitters assembled to 1199 remote seals, use 3051SAL specifications.

(2) Ultra for Flow is only available for 3051SMV DP ranges 2-4. For calibrated DP spans from 1:1 to 2:1 of URL, add ±0.005% of span analog output error.

(3) For DP range 4 or 5, Classic MV and Ultra for Flow static pressure accuracy is +/-0.055% of span. For spans less than 5:1, +/-[0.013(URL/Span)]% of span.

Liquid level transmitter

3051SAL		
	Ultra	**Classic**
Ranges 2 - 5	±0.055% of span For spans less than 10:1, ±[0.015 + 0.005(URL / Span)]% of span	±0.065% of span For spans less than 10:1, ±[0.015 + 0.005(URL / Span)]% of span

Process temperature RTD interface[1]

Process temperature (3051SMV_ _1 or 3)
±0.67 °F (0.37 °C)

(1) Specifications for process temperature are for the transmitter portion only. The transmitter is compatible with any Pt 100 (100 ohm platinum) RTD. Examples of compatible RTDs include Rosemount series 68 and 78 RTD Temperature Sensors.

DP reference accuracy of 3051S ERS System[1]

2 coplanar gage transmitters (3051SAM_ _G)		
	Ultra	**Classic**
Ranges 2-4	±0.035% of DP span	±0.078% of DP span
Range 5	±0.071% of DP span	±0.092% of DP span
2 coplanar absolute transmitters (3051SAM_ _A)		
	Ultra	**Classic**
Ranges 1-4	±0.035% of DP span	±0.078% of DP span
2 in-line gage transmitters (3051SAM_ _T) **2 in-line absolute transmitters (3051SAM_ _E)**		
	Ultra	**Classic**
Ranges 1-4	±0.035% of DP span	±0.**078**% of DP span
2 Liquid level transmitters (3051SAL)		
	Ultra	**Classic**
Ranges 1-4	±0.092% of DP span	±0.092% of DP span

(1) Reference Accuracy specifications for ERS system assume that the configuration contains two transmitters with identical sensor ranges, each transmitter sensor is calibrated 0 – URL, and the DP Span = 10% of transmitter URL.

Transmitter total performance

Total performance is based on combined errors of reference accuracy, ambient temperature effect, and line pressure effect at normal operating conditions (70% of span typical reading, 740 psi (51 bar) line pressure).

Models		**Ultra**	**Classic and Classic MV**	**Ultra for Flow[1]**
3051S_CD	Ranges 2-3	±0.1% of span For ±50 °F (28 °C) temperature changes; 0-100% relative humidity, from 1:1 to 5:1 rangedown	±0.14% of span For ±50 F (28 °C) temperature changes, 0-100% relative humidity, from 1:1 to 5:1 rangedown	±0.15% of reading For ±50 °F (28 °C) temperature changes, 0-100% relative humidity, over 8:1 DP turndown from URL
3051S_CG	Ranges 2-5			
3051S_CA	Ranges 2-4			
3051S_T	Ranges 2-4			
3051SMV[2]	DP Ranges 2-3			
3051SAM_ _G[3]	Ranges 2-5			
3051SAM_ _A[3]	Ranges 2-4			
3051SAM_ _T[3]	Ranges 2-4			
3051SAM_ _E[3]	Ranges 2-4			
3051SAL		Use *Instrument Toolkit or the QZ Option to quantify the total performance of a remote seal assembly under operating conditions.*		

(1) Ultra for Flow is only available for 3051S_CD Ranges 2-3 and 3051SMV DP Ranges 2-4.

(2) For 3051SMV, Transmitter Total Performance specification applies to differential pressure measurement only.

(3) Specifications are for each gage / absolute pressure sensor of the ERS system and are not reflective of the DP calculation.

MultiVariable flow performance[1]

Mass, energy, actual volumetric, and totalized flow reference accuracy

Models	Ultra for Flow	Classic MV
3051SMV[2]		
DP Ranges 2-3	±0.65% of Flow Rate over a 14:1 flow range (200:1 DP range)	±0.70% of Flow Rate over 8:1 flow range (64:1 DP range)
DP Range 1	Not Available	±0.90% of Flow Rate over 8:1 flow range (64:1 DP range)
Annubar Flowmeter (3051SFA)		
Ranges 2-3	±0.80% of flow rate at 14:1 flow turndown	±1.15% of flow rate at 8:1 flow turndown
Compact Annubar Flowmeter (3051SFC_A)		
Ranges 2-3		
Uncalibrated	±1.55% of flow rate at 14:1 flow turndown	±1.60% of flow rate at 8:1 flow turndown
Calibrated	±0.80% of flow rate at 14:1 flow turndown	±1.00% of flow rate at 8:1 flow turndown
Compact Conditioning Orifice Flowmeter (3051SFC_C)		
Ranges 2-3		
$\beta = 0.4$	±0.75% of flow rate at 14:1 flow turndown	±1.10% of flow rate at 8:1 flow turndown
$\beta = 0.65$	±1.15% of flow rate at 14:1 flow turndown	±1.45% of flow rate at 8:1 flow turndown
Compact Orifice Flowmeter[3] (3051SFC_P)		
Ranges 2-3		
$\beta = 0.4$	±1.30% of flow rate at 14:1 flow turndown	±1.45% of flow rate at 8:1 flow turndown
$\beta = 0.65$	±1.30% of flow rate at 14:1 flow turndown	±1.45% of flow rate at 8:1 flow turndown
Integral Orifice Flowmeter (3051SFP)		
Ranges 2-3		
$\beta < 0.1$	±2.60% of flow rate at 14:1 flow turndown	±2.65% of flow rate at 8:1 flow turndown
$0.1 < \beta < 0.2$	±1.40% of flow rate at 14:1 flow turndown	±1.60% of flow rate at 8:1 flow turndown
$0.2 < \beta < 0.6$	±0.95% of flow rate at 14:1 flow turndown	±1.25% of flow rate at 8:1 flow turndown
$0.6 < \beta < 0.8$	±1.60% of flow rate at 14:1 flow turndown	±1.80% of flow rate at 8:1 flow turndown

(1) Flow performance specifications assume device is configured for full compensation of static pressure, process temperature, density, viscosity, gas expansion, discharge coefficient, and thermal correction variances over a specified operating range using MultiVariable Type M or Flowmeter Measurement Types 1 through 4.

(2) Uncalibrated differential producer (0.2 < beta < 0.6 Orifice) installed per ASME MFC 3M or ISO 5167-1. Uncertainties for discharge coefficient, producer bore, tube diameter, and gas expansion factor as defined in ASME MFC 3M or ISO 5167-1. Reference accuracy does not include RTD sensor accuracy.

(3) For line sizes less than 2-in. (50mm) or greater than 8 in. (200 mm), see the Rosemount DP Flowmeters and Primary Elements Product Data Sheet (document number 00813-0100-4485).

Uncompensated flow performance

Flow performance specifications assume the device only uses DP readings without pressure and temperature compensation.

Models	Ultra	Classic	Ultra for Flow
Annubar Flowmeter (3051SFA)			
Ranges 2-3	±0.95% of flow rate at 8:1 flow turndown	±1.25% of flow rate at 8:1 flow turndown	±0.80% of flow rate at 14:1 flow turndown
Compact Conditioning Orifice Flowmeter (3051SFC_C)			
Ranges 2-3			
β = 0.4	±0.90% of flow rate at 8:1 flow turndown	±1.10% of flow rate at 8:1 flow turndown	±0.75% of flow rate at 14:1 flow turndown
β = 0.65	±1.25% of flow rate at 8:1 flow turndown	±1.40% of flow rate at 8:1 flow turndown	±1.15% of flow rate at 14:1 flow turndown
Compact Annubar Flowmeter (3051SFC_A)			
Ranges 2-3			
Uncalibrated	±1.65% of flow rate at 8:1 flow turndown	±1.70% of flow rate at 8:1 flow turndown	±1.55% of flow rate at 14:1 flow turndown
Calibrated	±0.95% of flow rate at 8:1 flow turndown	±1.25% of flow rate at 8:1 flow turndown	±0.80% of flow rate at 14:1 flow turndown
Compact Orifice Flowmeter[(1)] (3051SFC_P)			
Ranges 2-3			
β = 0.4	±1.35% of flow rate at 8:1 flow turndown	±1.80% of flow rate at 8:1 flow turndown	±1.30% of flow rate at 14:1 flow turndown
β = 0.65	±1.35% of flow rate at 8:1 flow turndown	±1.80% of flow rate at 8:1 flow turndown	±1.30% of flow rate at 14:1 flow turndown
Integral Orifice Flowmeter (3051SFP)			
Ranges 2-3			
β < 0.1	±2.65% of flow rate at 8:1 flow turndown	±2.70% of flow rate at 8:1 flow turndown	±2.60% of flow rate at 14:1 flow turndown
0.1 < β < 0.2	±1.45% of flow rate at 8:1 flow turndown	±1.80% of flow rate at 8:1 flow turndown	±1.40% of flow rate at 14:1 flow turndown
0.2 < β < 0.6	±1.10% of flow rate at 8:1 flow turndown	±1.50% of flow rate at 8:1 flow turndown	±0.95% of flow rate at 14:1 flow turndown
0.6 < β < 0.8	±1.70% of flow rate at 8:1 flow turndown	±2.00% of flow rate at 8:1 flow turndown	±1.60% of flow rate at 14:1 flow turndown

(1) For line sizes less than 2-in. (50mm) or greater than 8 in. (200 mm), see the Rosemount DP Flowmeters and Primary Elements Product Data Sheet (document number 00813-0100-4485).

Long term stability

Pressure

Models		Ultra and Ultra for Flow[(1)]	Classic and Classic MV
3051S_CD	Ranges 2-5	±0.15% of URL for 15 years; for ±50 °F (28 °C) temperature changes, up to 1000 psi (68,9 bar) line pressure	±0.20% of URL for 15 years; for ±50 °F (28 °C) temperature changes, up to 1000 psi (68,9 bar) line pressure
3051S_CG	Ranges 2-5		
3051S_CA	Ranges 1-4		
3051S_T	Ranges 1-5		
3051SAM_ _G[(2)]	Ranges 2-5		
3051SAM_ _A[(2)]	Ranges 1-4		
3051SAM_ _T[(2)]	Ranges 1-5		
3051SAM_ _E[(2)]	Ranges 1-5		
3051SMV_ _3,4	Ranges 2-5		
3051SF_ _D,3,4	Ranges 2-5		
3051SMV_ _1,2	DP Ranges 2-5	±0.20% of URL for 10 years; for ±50 °F (28 °C) temperature changes, up to 1000 psi (68,9 bar) line pressure	±0.125% of URL for 5 years; for ±50 °F (28 °C) temperature changes, up to 1000 psi (68,9 bar) line pressure
3051SF_1,2	AP & GP Ranges 3-4		

(1) Ultra is only available for 3051S, 3051SMV_ _3 and 4, 3051SF_3, 4, 7, and D. Ultra for Flow is only available on 3051S_CD ranges 2-3, 3051SMV DP ranges 2-4, and 3051SF DP ranges 2-3.

(2) Specifications are for each gage / absolute pressure sensor of the ERS system and are not reflective of the DP calculation.

Process temperature[1]

Models		
3051SMV 3051SF	RTD Interface[1]	The greater of ±0.185 °F (0.103 °C) or 0.1% of reading per year (excludes RTD sensor stability).

(1) Specifications for process temperature are for the transmitter portion only. The transmitter is compatible with any Pt 100 (100 ohm platinum) RTD. Examples of compatible RTDs include the Rosemount Series 68 and 78 RTD Temperature Sensors.

Warranty[1]

Models	Ultra and Ultra for Flow	Classic and Classic MV
All 3051S Products[1]	15-year limited warranty[2]	1-year limited warranty[3]

(1) Warranty details can be found in Emerson Process Management Terms & Conditions of Sale, Document 63445, Rev G (10/06).

(2) Rosemount Ultra and Ultra for Flow transmitters have a limited warranty of fifteen (15) years from date of shipment. All other provisions of Emerson Process Management standard limited warranty remain the same.

(3) Goods are warranted for twelve (12) months from the date of initial installation or eighteen (18) months from the date of shipment by seller, whichever period expires first.

Dynamic performance

Total time response at 75 °F (24 °C), includes dead time[1][2]

3051S_C 3051SF_D	3051S_T	3051SMV_ _1 or 2 3051SF_1, 2, 5, or 6	3051SMV_ _3 or 4 3051SF_3, 4, or 7	ERS System (3051SAM)
DP Ranges 2-5: 100 ms Range 1: 255 ms Range 0: 700 ms	100 ms	DP Range 1: 310 ms DP Range 2: 170 ms DP Range 3: 155 ms AP & GP: 240 ms	DP Ranges 2-5: 145 ms DP Range 1: 300 ms DP Range 0: 745 ms	360 ms

(1) For FOUNDATION fieldbus (output code F), add 52 ms to stated values (not including segment macro-cycle).
For option code DA2, add 45 ms (nominal) to stated values.

(2) Consult Instrument Toolkit for transmitter configurations with remote seals including 3051SAL.

Dead time[1]

3051S_C 3051S_T 3051SF_D 3051SAL_C	3051SMV 3051SF_1-7	ERS System (includes 3051SAM, 3051SAL_P, and 3051SAL_S models
45 ms (nominal)	DP: 100 ms AP & GP: 140 ms RTD Interface: 1 s	220 ms

(1) For option code DA2, dead time is 90 milliseconds (nominal).

Sensor update rate[1]

3051S_C or T 3051SF_D 3051SAL_C	3051SMV 3051SF_1-7		ERS System (includes 3051SAM, 3051SAL_P, and 3051SAL_S models
22 updates per sec.	DP: 22 updates per sec. AP & GP: 11 updates per sec. RTD Interface: 1 update per sec.	Calculated Variables: Mass / Volumetric Flow Rate: 22 updates per sec. Energy Flow Rate: 22 updates per sec. Totalized Flow: 1 update per sec.	11 updates per sec.

(1) Does not apply to Wireless (output code X). See "IEC 62591 (WirelessHART)" on page -94 for wireless update rate.

Ambient temperature effect

Transmitter with coplanar sensor module (single variable)

Differential pressure: (3051S_CD, 3051SMV_ _3 or 4) Gage pressure: (3051S_CG, 3051SAM_ _G[1])			
	Ultra per 50 °F (28 °C)	**Classic per 50 °F (28 °C)**	**Ultra for Flow[2] -40 to 185 °F (-40 to 85 °C)**
Ranges 2 - 5[3]	±(0.009% URL + 0.025% span) from 1:1 to 10:1; ±(0.018% URL + 0.08% span) from >10:1 to 200:1	±(0.0125% URL +0.0625% span) from 1:1 to 5:1; ±(0.025% URL + 0.125% span) from >5:1 to 150:1	±0.13% of reading up to 8:1 DP turndown from URL; ±[0.13 + 0.0187(URL/Reading)]% of reading to 100:1 DP turndown from URL
Range 0	±(0.25% URL + 0.05% span) from 1:1 to 30:1	±(0.25% URL + 0.05% span) from 1:1 to 30:1	Not Available
Range 1	±(0.1% URL + 0.25% span) from 1:1 to 50:1	±(0.1% URL + 0.25% span) from 1:1 to 50:1	Not Available
Absolute pressure: (3051S_CA, 3051SAM_ _A[1])			
	Ultra per 50 °F (28 °C)	**Classic per 50 °F (28 °C)**	
Ranges 2-4	±(0.0125% URL + 0.0625% span) from 1:1 to 5:1; ±(0.025% URL + 0.125% span) from >5:1 to 200:1	±(0.0125% URL + 0.0625% span) from 1:1 to 5:1; ±(0.025% URL + 0.125% span) from >5:1 to 150:1	
Range 0	±(0.1% URL + 0.25% span) from 1:1 to 30:1	±(0.1% URL + 0.25% span) from 1:1 to 30:1	
Range 1	±(0.0125% URL + 0.0625% span) from 1:1 to 5:1; ±(0.025% URL + 0.125% span) from >5:1 to 100:1	±(0.0125% URL + 0.0625% span) from 1:1 to 5:1; ±(0.025% URL + 0.125% span) from >5:1 to 100:1	

(1) Specifications are for each gage / absolute pressure sensor of the ERS system and are not reflective of the DP calculation.

(2) Ultra for Flow is only available for 3051S_CD Ranges 2-3 and 3051SMV DP Ranges 2-3.

(3) Use Classic specification for 3051SMV DP Range 5 Ultra and 3051S_CD Range 5 Ultra.

Transmitter with in-line sensor module

Absolute pressure: (3051S_TA, 3051SAM_ _E[1]) Gage pressure: (3051S_TG, 3051SAM_ _T[1])		
	Ultra per 50 °F (28 °C)	**Classic per 50 °F (28 °C)**
Ranges 2-4	±(0.009% URL + 0.025% span) from 1:1 to 10:1; ±(0.018% URL + 0.08% span) from >10:1 to 200:1	±(0.0125% URL + 0.0625% span) from 1:1 to 5:1; ±(0.025% URL + 0.125% span) from >5:1 to 150:1
Range 5	±(0.05% URL + 0.075% span) from 1:1 to 10:1	±(0.05% URL + 0.075% span) from 1:1 to 10:1
Range 1	±(0.0125% URL + 0.0625% span) from 1:1 to 5:1; ±(0.025% URL + 0.125% span) from >5:1 to 100:1	±(0.0125% URL + 0.0625% span) from 1:1 to 5:1; ±(0.025% URL + 0.125% span) from >5:1 to 100:1

(1) Specifications are for each gage / absolute pressure sensor of the ERS system and are not reflective of the DP calculation.

Transmitter with multivariable sensor module

Differential pressure and static pressure (3051SMV_ _1 or 2)		
Models	**Classic MV Per 50 °F (28 °C)**	**Ultra for Flow -40 to 185 °F (-40 to 85 °C)**
DP Ranges 2-3	±(0.0125% URL + 0.0625% span) from 1:1 to 5:1; ±(0.025% URL + 0.125% span) for >5:1 to 100:1	±0.13 reading up to 8:1 DP turndown from URL; ±[0.13 + 0.0187(URL/Reading)]% reading to 100:1 DP turndown from URL
DP Range 4	±(0.025% URL + 0.125% span) from 1:1 to 30:1 ±(0.035% URL + 0.125% span) from 30:1 to 100:1	±0.130% of reading less than or equal to 3:1 ±[0.050 + 0.065 (URL/RDG)]% of reading greater than 3:1
DP Range 5	±(0.025% URL + 0.125% span) from 1:1 to 30:1 ±(0.035% URL + 0.125% span) from 30:1 to 100:1	Not Available
DP Range 1	±(0.1% URL + 0.25% span) from 1:1 to 50:1	Not available
AP & GP	±(0.0125% URL + 0.0625% span) from 1:1 to 10:1; ±(0.025% URL + 0.125% span) for >10:1 to 100:1	±(0.009% URL + 0.025% span) from 1:1 to 10:1; ±(0.018% URL + 0.08% span) for >10:1[(1)]

(1) For DP range 4 or 5, Ultra for Flow ambient temperature effect on static pressure is +/-(0.0125% URL + 0.0625% Span) from 1:1 to 10:1; +/-(0.025% URL + 0.125% Span) for >10:1.

Liquid level transmitter

3051SAL	
Ultra	**Classic**
See *Instrument Toolkit*	See *Instrument Toolkit*

Process temperature RTD interface[(1)]

Process temperature (3051SMV_ _1 or 3)	
Classic MV Per 50 °F (28 °C)[(1)]	**Ultra for Flow -40 to 185 °F (-40 to 85 °C)**
±0.39 °F (0,216 °C) per 50 °F (28 °C)	±0.39 °F (0,216 °C) per 50 °F (28 °C)

(1) Specifications for process temperature are for the transmitter portion only. The transmitter is compatible with any Pt 100 (100 ohm platinum) RTD. Examples of compatible RTDs include Rosemount series 68 and 78 RTD Temperature Sensors.

Line pressure effect[(1)]

3051S_CD 3051SMV (DP Measurement Only)	Ultra and Ultra for Flow	Classic and Classic MV
Zero Error[(2)]		
Range 2-3	± 0.025% URL per 1000 psi (69 bar)	± 0.05% URL per 1000 psi (69 bar)
Range 0	± 0.125% URL per 100 psi (6,9 bar)	± 0.125% URL per 100 psi (6,9 bar)
Range 1	± 0.25% URL per 1000 psi (69 bar)	± 0.25% URL per 1000 psi (69 bar)
Span Error[(3)]		
Range 2-3	± 0.1% of reading per 1000 psi (69 bar)	± 0.1% of reading per 1000 psi (69 bar)
Range 0	± 0.15% of reading per 100 psi (6,9 bar)	± 0.15% of reading per 100 psi (6,9 bar)
Range 1	± 0.4% of reading per 1000 psi (69 bar)	± 0.4% of reading per 1000 psi (69 bar)

(1) For zero error specifications for line pressures above 2000 psi (137,9 bar) or line pressure effect specifications for DP Ranges 4-5, see the 3051SMV Reference Manual (document number 00809-0100-4803) or 3051S Reference Manual (document number 00809-0100-4801).

(2) Zero error can be removed by performing a zero trim at line pressure.

(3) Specifications for option code P0 are 2 times those shown above.

Mounting position effects

Models		Ultra, Ultra for Flow, Classic and Classic MV
3051S_CD or CG 3051SMV_ _ 3 or 4 3051SF_3, 4, 7, or D 3051SAM_ _G		Zero shifts up to ±1.25 inH_2O (3,11 mbar), which can be zeroed Span: no effect
3051S_CA 3051S_T 3051SAM_ _A, T, or E		Zero shifts to ±2.5 inH_2O (6,22 mbar), which can be zeroed Span: no effect
3051SMV_ _ 1 or 2 3051SF_1, 2, 5, or 6	DP Sensor:	Zero shifts up to ±1.25 inH_2O (3,11 mbar), which can be zeroed Span: no effect
	GP/AP Sensor:	Zero shifts to ±2.5 inH_2O (6,22 mbar), which can be zeroed Span: no effect
3051SAL		With liquid level diaphragm in vertical plane, zero shift of up to ±1 inH_2O (2,5 mbar). With diaphragm in vertical plane, zero shift of up to ±5 inH_2O (12,4 mbar) plus extension length on extended units. All zero shifts can be zeroed. Span: no effect

Vibration effect

Less than ±0.1% of URL when tested per the requirements of IEC60770-1 field or pipeline with high vibration level (10-60 Hz 0.21 mm displacement peak amplitude / 60-2000 Hz 3g).

For Housing Style codes 1J, 1K, 1L, 2J, and 2M:
Less than ±0.1% of URL when tested per the requirements of IEC60770-1 field with general application or pipeline with low vibration level (10-60 Hz 0.15 mm displacement peak amplitude / 60-500 Hz 2g).

Power supply effect

Less than ±0.005% of calibrated span per volt change in voltage at the transmitter terminals

Electromagnetic compatibility (EMC)

Meets all relevant requirements of EN 61326 and NAMUR NE-21.[(1)(2)]

(1) NAMUR NE-21 does not apply to wireless output code X or ERS configurations.

(2) 3051SMV and 3051SF_1, 2, 3, 4, 5, 6, 7 requires shielded cable for both temperature and loop wiring.

Transient protection (option T1)

Tested in accordance with IEEE C62.41.2-2002,
Location Category B
- 6 kV crest (0.5 μs - 100 kHz)
- 3 kA crest (8 × 20 microseconds)
- 6 kV crest (1.2 × 50 microseconds)

Functional Specifications

Range and sensor limits

Transmitter with coplanar sensor module (single variable)

Range	DP Sensor[1] (3051S_CD, 3051SMV_ _3, 4, or D 3051SF_3, 4, or 7, 3051SAL_CD)		GP Sensor (3051S_CG, 3051SAM_ _G, 3051SAL_ _G)		AP Sensor[2] (3051S_CA, 3051SAM_ _A, 3051SAL_ _A)	
	Lower (LRL)[3]	Upper (URL)	Lower (LRL)[4]	Upper (URL)	Lower (LRL)	Upper (URL)
0	-3 inH_2O (-7,5 mbar)	3 inH_2O (7,5 mbar)	N/A	N/A	0 psia (0 bar)	5 psia (0,34 bar)
1	-25 inH_2O (-62,3 mbar)	25 inH_2O (62,3 mbar)	-25 inH_2O (-62,3 mbar)	25 inH_2O (62,3 mbar)	0 psia (0 bar)	30 psia (2,07 bar)
2	-250 inH_2O (-0,62 bar)	250 inH_2O (0,62 bar)	-250 inH_2O (-0,62 bar)	250 inH_2O (0,62 bar)	0 psia (0 bar)	150 psia (10,34 bar)
3	-1000 inH_2O (-2,49 bar)	1000 inH_2O (2,49 bar)	-393 inH_2O (-979 mbar)	1000 inH_2O (2,49 bar)	0 psia (0 bar)	800 psia (55,16 bar)
4	-300 psi (-20,7 bar)	300 psi (20,7 bar)	-14.2 psig (-979 mbar)	300 psi (20,7 bar)	0 psia (0 bar)	4000 psia (275,8 bar)
5	-2000 psi (-137,9 bar)	2000 psi (137,9 bar)	-14.2 psig (-979 mbar)	2000 psi (137,9 bar)	N/A	N/A

(1) 3051SF flowmeters only available with ranges 1, 2, and 3.

(2) Range 0 is not available for 3051SAL_ _A.

(3) The Lower Range Limit (LRL) is 0 inH_20 (0 mbar) for Ultra for Flow Performance Class and 3051SF flowmeters.

(4) Assumes atmospheric pressure of 14.7 psia (1 bar-a).

Transmitter with in-line sensor module

Range	GP Sensor (3051S_TG, 3051SAM_ _T, 3051SAL_ _T)		AP Sensor (3051S_TA, 3051SAM_ _E, 3051SAL_ _E)	
	Lower (LRL)[1]	Upper (URL)	Lower (LRL)	Upper (URL)
1	-14.7 psig (-1,01 bar)	30 psig (2,07 bar)	0 psia (0 bar)	30 psia (2,07 bar)
2	-14.7 psig (-1,01 bar)	150 psig (10,34 bar)	0 psia (0 bar)	150 psia (10,34 bar)
3	-14.7 psig (-1,01 bar)	800 psig (55,16 bar)	0 psia (0 bar)	800 psia (55,16 bar)
4	-14.7 psig (-1,01 bar)	4000 psig (275,8 bar)	0 psia (0 bar)	4000 psia (275,8 bar)
5	-14.7 psig (-1,01 bar)	10000 psig (689,5 bar)	0 psia (0 bar)	10000 psia (689,5 bar)

(1) Assumes atmospheric pressure of 14.7 psia (1 bar-a).

Transmitter with multivariable sensor module (3051SMV_ _1, 3051SMV_ _2, 3051SF_1, 3051SF_2, 3051SF_5, and 3051SF_6)

Range	DP Sensor	
	Lower (LRL)[1]	Upper (URL)
1	-25.0 inH_2O (-62,3 mbar)	25.0 inH_2O (62,3 mbar)
2	-250.0 inH_2O (-0,62 bar)	250.0 inH_2O (0,62 bar)
3	-1000.0 inH_2O (-2,49 bar)	1000.0 inH_2O (2,49 bar)
4	-150 psi (-10,34 bar)	150 psi (10,34 bar)
5	-2000 psi (-137,9 bar)	2000 psi (137,9 bar)

(1) Lower (LRL) is 0 inH_2O (0 mbar) for Ultra for Flow and 3051SF_ Flowmeters.

Range	Static pressure sensor (GP/AP)	
	Lower (LRL)	Upper (URL)[1]
3	GP[2][3]: -14.2 psig (-0,98 bar) AP: 0.5 psia (34,5 mbar)	GP: 800 psig (55,16 bar) AP: 800 psia (55,16 bar)
4	GP[2][3]: -14.2 psig (-0,98 bar) AP: 0.5 psia (34,5 mbar)	GP: 3626 psig (250 bar) AP: 3626 psia (250 bar)

(1) For SP Range 4 with DP Range 1, the URL is 2000 psi (137,9 bar).

(2) Inert Fill: Minimum pressure = 1.5 psia (0,10 bar) or -13.2 psig (-0,91 bar).

(3) Assumes atmospheric pressure of 14.7 psia (1 bar-a).

Process temperature RTD Interface (3051SMV_ _1 or 3, 3051SF_1, 3, 5 or 7)[1]

Lower (LRL)	Upper (URL)
-328 °F (-200 °C)	1562 °F (850 °C)

(1) Transmitter is compatible with any Pt 100 RTD sensor. Examples of compatible RTDs include Rosemount Series 68 and 78 RTD Temperature Sensors.

Minimum span limits

Transmitter with coplanar sensor module (single variable)

Range	DP Sensor[1] (3051S_CD, 3051SMV_ _3 or 4, 3051SF_D, 3, 4 or 7, 3051SAL_ _CD[2])		GP Sensor (3051S_CG, 3051SAM_ _G[3], 3051SAL_ _G[2][3])		AP Sensor (3051S_CA, 3051SAM_ _A[3], 3051SAL_ _A[2][3])	
	Ultra & Ultra for Flow	Classic	Ultra	Classic	Ultra	Classic
0	0.10 inH_2O (0,25 mbar)	0.10 inH_2O (0,25 mbar)	N/A	N/A	0.167 psia (11,49 mbar)	0.167 psia (11,49 mbar)
1	0.50 inH_2O (1,24 mbar)	0.50 inH_2O (1,24 mbar)	0.50 inH_2O (1,24 mbar)	0.50 inH_2O (1,24 mbar)	0.30 psia (20,68 mbar)	0.30 psia (20,68 mbar)
2	1.25 inH_2O (3,11 mbar)	1.67 inH_2O (4,14 mbar)	1.25 inH_2O (3,11 mbar)	1.67 inH_2O (4,14 mbar)	0.75 psia (51,71 mbar)	1.00 psia (68,95 mbar)
3	5.00 inH_2O (12,43 mbar)	6.67 inH_2O (16,58 mbar)	5.00 inH_2O (12,43 mbar)	6.67 inH_2O (16,58 mbar)	4.00 psia (275,79 mbar)	5.33 psia (367,72 mbar)
4	1.50 psi (103,42 mbar)	2.00 psi (137,90 mbar)	1.50 psig (103,42 mbar)	2.00 psig (137,90 mbar)	20.00 psia (1,38 bar)	26.67 psia (1,84 bar)
5	10.00 psi (689,48 mbar)	13.33 psi (0,92 bar)	10.00 psig (689,48 mbar)	13.33 psig (0,92 bar)	N/A	N/A

(1) 3051SF flowmeters only available with ranges 1, 2, and 3.

(2) For 3051SAL models, use Classic minimum span limits.

(3) Specifications are for each gage / absolute pressure sensor of the ERS system and are not reflective of the DP calculation.

Transmitter with in-line sensor module

Range	GP Sensor (3051S_TG, 3051SAM_ _T[1], 3051SAL_ _T[2])		AP Sensor (3051S_TA, 3051SAM_ _E[1], 3051SAL_ _E[2])	
	Ultra	Classic	Ultra	Classic
1	0.30 psig (20,68 mbar)	0.30 psig (20,68 mbar)	0.30 psia (20,68 mbar)	0.30 psia (20,68 mbar)
2	0.75 psig (51,71 mbar)	1.00 psig (68,95 mbar)	0.75 psia (51,71 mbar)	1.00 psia (68,95 mbar)
3	4.00 psig (275,79 mbar)	5.33 psig (367,72 mbar)	4.00 psia (275,79 mbar)	5.33 psia (367,72 mbar)
4	20.00 psig (1,38 bar)	26.67 psig (1,84 bar)	20.00 psia (1,38 bar)	26.67 psia (1,84 bar)
5	1000.00 psig (68,95 bar)	2000.00 psig (137,90 bar)	1000.00 psia (68,95 bar)	2000.00 psia (137,90 bar)

(1) Specifications are for each gage / absolute pressure sensor of the ERS system and are not reflective of the DP calculation.

(2) For 3051SAL models, use Classic minimum span limits.

Transmitter with multivariable sensor module (3051SMV_ _1 or 2, 3051SF_1, 2, 5, or 6)

Range	DP Sensor	
	Ultra for Flow	Classic MV
1	0.5 inH_2O (1,24 mbar)	0.5 inH_2O (1,24 mbar)
2	1.3 inH_2O (3,23 mbar)	2.5 inH_2O (6,23 mbar)
3	5.0 inH_2O (12,4 mbar)	10.0 inH_2O (24,9 mbar)
4	1.5 psi (103,4 mbar)	3.0 psi (206,84 mbar)
5	Not Available	20.0 psi (1,38 bar)
Range	**Static pressure sensor (GP/AP)**	
	Ultra for Flow	**Classic MV**
3	4.0 psi (276 mbar)	8.0 psi (522 mbar)
4	18.13 psi (1,25 bar)	36.26 psi (2,50 bar)

Process temperature RTD Interface (3051SMV_ _1 or 3, 3051SF_1, 3, 5 or 7)

Minimum Span = 52 °F (11 °C)

DP span considerations for electronic remote sensor applications

It is recommended that the DP rangedown (Operating Pressure/DP Span) for ERS applications not exceed 100:1. Consult with your Emerson Process Management sales representative when considering a 3051S ERS System for applications beyond 100:1 rangedown.

Service

3051S, 3051SMV_P, 3051SAM, and 3051SF_5, 6, 7, or D (direct process variable output):

Liquid, gas, and vapor applications

3051SAL

Liquid level applications

3051SMV_M and 3051SF_1, 2, 3, or 4 (mass and energy flow output):

Some fluid types are only supported by certain measurement types

Fluid Compatibility with Pressure and Temperature Compensation • **Available** — Not available

Ordering code		Fluid types			
	Measurement type	Liquids	Saturated steam	Superheated steam	Gas and natural gas
1	DP / P/ T (Full Compensation)	•	•	•	•
2	DP / P	•	•	•	•
3	DP / T	•	•	—	—
4	DP only	•	•	—	—

4–20 mA HART

Zero and span adjustment

Zero and span values can be set anywhere within the range. Span must be greater than or equal to the minimum span.

Output

Two-wire 4–20 mA is user-selectable for linear or square root output. Digital process variable superimposed on 4–20 mA signal, available to any host that conforms to the HART protocol.

Power supply

External power supply required.

- 3051S and 3051SF_D: 10.5 to 42.4 Vdc with no load
- 3051S and 3051SF_D with Advanced HART Diagnostics Suite: 12 to 42.4 Vdc with no load
- 3051SMV and 3051SF_1-7: 12 to 42.4 Vdc with no load

Load limitations

Maximum loop resistance is determined by the voltage level of the external power supply, as described by:

3051S and 3051SF_D

Maximum Loop Resistance = 43.5 * (Power Supply Voltage – 10.5)

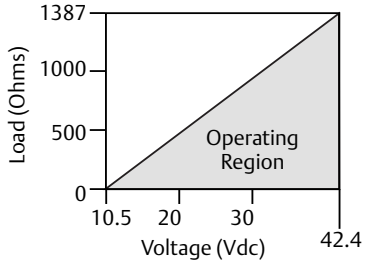

The field communicator requires a minimum loop resistance of 250Ω for communication.

3051SMV and 3051SF_1-7
3051S and 3051SF_D with HART Diagnostics (option code DA2)

Maximum Loop Resistance = 43.5 * (Power Supply Voltage – 12.0)

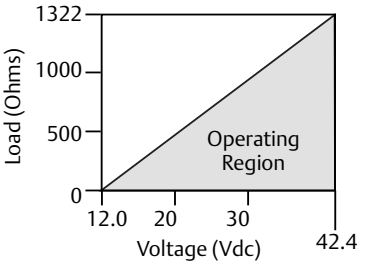

The field communicator requires a minimum loop resistance of 250Ω for communication.

3051S ERS System

If supply voltage ≤ 16.74 Vdc:
Maximum Loop Resistance = 277 * (Power Supply Voltage – 16.0)
If supply voltage > 16.74 Vdc:
Maximum Loop Resistance = 43.5 * (Power Supply Voltage – 12.0)

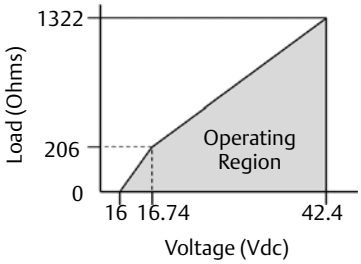

The field communicator requires a minimum loop resistance of 250Ω for communication.

Advanced HART Diagnostics Suite (option code DA2)

Statistical Process Monitoring (SPM) provides statistical data (standard deviation, mean, coefficient of variation) that can be used to detect process and process equipment anomalies, including plugged impulse lines, air entrainment, pump cavitation, furnace flame instability, distillation column flooding and more. This diagnostic allows you to take preventative measures before abnormal process situations result in unscheduled downtime or rework.

Power Advisory diagnostic pro-actively detects and notifies you of degraded electrical loop integrity before it can affect your process operation. Example loop problems that can be detected include water in the terminal compartment, corrosion of terminals, improper grounding, and unstable power supplies.

The Device Dashboard presents the diagnostics in a graphical, task-based interface that provides single click access to critical process/device information and descriptive graphical troubleshooting.

Suite includes: Statistical Process Monitoring (SPM), Power Advisory, Status Log, Variable Log, Advanced Process Alerts, Service Alerts, and Time Stamp capability.

FOUNDATION fieldbus

Power supply

External power supply required; transmitters operate on 9.0 to 32.0 Vdc transmitter terminal voltage.

Current draw

17.5 mA for all configurations (including LCD display option)

FOUNDATION fieldbus parameters

Schedule Entries	14 (max.)
Links	30 (max.)
Virtual Communications Relationships (VCR)	20 (max.)

Standard function blocks

Resource block

- Contains hardware, electronics, and diagnostic information.

Transducer block

- Contains actual sensor measurement data including the sensor diagnostics and the ability to trim the pressure sensor or recall factory defaults.

LCD display block

- Configures the local display.

2 analog input blocks

- Processes the measurements for input into other function blocks. The output value is in engineering or custom units and contains a status indicating measurement quality.

PID block with auto-tune

- Contains all logic to perform PID control in the field including cascade and feedforward. Auto-tune capability allows for superior tuning for optimized control performance.

Backup link active scheduler (LAS)

The transmitter can function as a Link Active Scheduler if the current link master device fails or is removed from the segment.

Software upgrade in the Field

Software for the 3051S with FOUNDATION fieldbus is easy to upgrade in the field using the FOUNDATION fieldbus Common Device Software Download procedure.

PlantWeb alerts

Enable the full power of the PlantWeb digital architecture by diagnosing instrumentation issues, communicating advisory, maintenance, and failure details, and recommending a solution.

Advanced Control Function Block Suite (option code A01)

Input Selector Block

- Selects between inputs and generates an output using specific selection strategies such as minimum, maximum, midpoint, average, or first "good."

Arithmetic Block

- Provides pre-defined application-based equations including flow with partial density compensation, electronic remote sensors, hydrostatic tank gauging, ratio control and others.

Signal Characterizer Block

- Characterizes or approximates any function that defines an input/output relationship by configuring up to twenty X, Y coordinates. The block interpolates an output value for a given input value using the curve defined by the configured coordinates.

Integrator Block

- Compares the integrated or accumulated value from one or two variables to pre-trip and trip limits and generates discrete output signals when the limits are reached. This block is useful for calculating total flow, total mass, or volume over time.

Output Splitter Block

- Splits the output of one PID or other control block so that the PID will control two valves or other actuators.

Control Selector Block

- Selects one of up to three inputs (highest, middle, or lowest) that are normally connected to the outputs of PID or other control function blocks.

Block	Execution time
Resource	-
Transducer	-
LCD Display Block	-
Analog Input 1, 2	20 milliseconds
PID with Auto-tune	35 milliseconds
Input Selector	20 milliseconds
Arithmetic	20 milliseconds
Signal Characterizer	20 milliseconds
Integrator	20 milliseconds
Output Splitter	20 milliseconds
Control Selector	20 milliseconds

Fully compensated mass flow block (option code H01)

Calculates fully compensated mass flow based on differential pressure with external process pressure and temperature measurements over the fieldbus segment. Configuration for the mass flow calculation is easily accomplished using the Rosemount Engineering Assistant 5.5.1.

FOUNDATION fieldbus Diagnostics Suite (option code D01)

Statistical Process Monitoring (SPM) provides statistical data (standard deviation and mean) that can be used to detect process and process equipment anomalies, including plugged impulse lines, air entrainment, pump cavitation, furnace flame instability, distillation column flooding, and more. This diagnostic allows you to take preventative measures before abnormal process situations result in unscheduled downtime or rework.

The Device Dashboard presents the diagnostics in a graphical, task-based interface that provides single click access to critical process/device information and descriptive graphical troubleshooting.

Suite includes: Statistical Process Monitoring (SPM) and Plugged Impulse Line Detection (PIL).

IEC 62591 (*Wireless*HART)

Output

IEC 62591 (*Wireless*HART), 2.4 GHz DSSS

Radio frequency power output from antenna

External Antenna (WK option): Maximum of 10 mW (10 dBm) EIRP

Extended Range, External Antenna (WM option): Maximum of 18 mW (12.5 dBm) EIRP

High-Gain, Remote Antenna (WN option): Maximum of 40 mW (16 dBm) EIRP

Local display

The optional seven-digit LCD display can display user-selectable information such as primary variable in engineering units, percent of range, sensor module temperature, and electronics temperature. The display updates based on the wireless update rate.

Update rate

User selectable 1 sec. to 60 min.

Power module

Field replaceable, keyed connection eliminates the risk of incorrect installation, Intrinsically Safe Lithium-thionyl chloride Power Module with polybutadine terephthalate (PBT) enclosure. Ten-year life at one minute update rate.[(1)(2)]

(1) Reference conditions are 70 °F (21 °C), and routing data for three additional network devices.
Note: Continuous exposure to ambient temperature limits of -40 °F or 185 °F (-40 °C or 85 °C) may reduce specified life by less than 20 percent.

(2) 6.5-year life at one minute update rates when used with 3051SMV.

Overpressure limits

Transmitters withstand the following limits without damage:

Coplanar sensor module (single variable)

Range	DP[(1)] & GP 3051S_CD, 3051S_CG 3051SMV_ _3 or 4 3051SF_3, 4, 7, or D 3051SAM_ _G	AP 3051S_CA 3051SAM_ _A
0	750 psi (51,7 bar)	60 psia (4,13 bar)
1	2000 psi (137,9 bar)	750 psia (51,7 bar)
2	3626 psi (250,0 bar)	1500 psia (103,4 bar)
3	3626 psi (250,0 bar)	1600 psia (110,3 bar)
4	3626 psi (250,0 bar)	6000 psia (413,7 bar)
5	3626 psi (250,0 bar)	N/A

(1) The overpressure limit of a DP Sensor with the P9 option is 4500 psig (310,3 bar). The overpressure limit of a DP Sensor with the P0 option is 6092 psig (420 bar).

In-line sensor module

Range	GP 3051S_TG 3051SAM_ _T	AP 3051S_TA 3051SAM_ _E
1	750 psi (51,7 bar)	
2	1500 psi (103,4 bar)	
3	1600 psi (110,3 bar)	
4	6000 psi (413,7 bar)	
5	15000 psi (1034,2 bar)	

Coplanar MultiVariable Sensor Module (3051SMV_ _1 or 2, 3051SF_1, 2, 5, or 6)

DP Range	Static pressure range (GP/AP)	
	3	4
1	1600 psi (110,3161 bar)	2000 psi (137,9137,8951 bar)
2	1600 psi (110,3161 bar)	3626 psi (250,0039 bar)
3	1600 psi (110,3161 bar)	3626 psi (250,0039 bar)
4	N/A	3626 psi (250,0039 bar)
5	N/A	3626 psi (250,0039 bar)

Liquid level transmitter (3051SAL)

Overpressure limit is dependent on the flange rating or sensor rating (whichever is lower). Use *Instrument Toolkit* to ensure the seal system meets all pressure and temperature limits.

Static pressure limits

Coplanar sensor module (single variable)

Operates within specifications between static line pressures of:

Range	DP Sensor[(1)] 3051S_CD 3051SMV_ _3 or 4 3051SF_3, 4, 7, or D
0	0.5 psia to 750 psig (0,03 to 51,71 bar)
1	0.5 psia to 2000 psig (0,03 to 137,9 bar)
2	0.5 psia to 3626 psig (0,03 to 250 bar)
3	0.5 psia to 3626 psig (0,03 to 250 bar)
4	0.5 psia to 3626 psig (0,03 to 250 bar)
5	0.5 psia to 3626 psig (0,03 to 250 bar)

(1) The static pressure limit of a DP Sensor with the P9 option is 4500 psig (310,3 bar). The static pressure limit of a DP Sensor with the P0 option is 6092 psig (420 bar).

Coplanar multivariable sensor module (3051SMV_ _1 or 2, 3051SF_1, 2, 5, or 6)

Operates within specifications between static line pressures of 0.5 psia (0,03 bar) and the values in the table below:

DP Range	Static pressure range (GP/AP)	
	3	4
1	800 psi (57,91 bar)	2000 psi (137,9 bar)
2	800 psi (57,91 bar)	3626 psi (250 bar)
3	800 psi (57,91 bar)	3626 psi (250 bar)
4	N/A	3626 psi (250 bar)
5	N/A	3626 psi (250 bar)

Maximum working pressure limits

Maximum working pressure is the maximum pressure allowed for normal transmitter operation. For a differential pressure transmitter, the maximum working pressure is the static line pressure under which the transmitter can safely operate. If one side of the transmitter is exposed to the full static line pressure due to mis-valving, the transmitter will experience an output shift and must be re-zeroed. For a gage or absolute pressure transmitter, the maximum working pressure is the same as the Upper Range Limit (URL). The maximum working pressure of transmitters with assemble-to options is limited by the lowest maximum pressure rating of the individual components.

Table 16. 3051S maximum working pressure

Range	3051S_CD 3051SAL_ _D 3051SAM_ _D	3051S_CG 3051SAL_ _G 3051SAM_ G	3051S_CA 3051SAL_ _A 3051SAM_ _A	3051S_TA 3051SAL_ _E 3051SAM_ _E	3051S_TG 3051SAL_ _T 3051SAM_ _T
0	750 psi 51.7 bar 5.17 mpa	N/A	5 psia 0.35 bar-a .035 mpa	N/A	N/A
1	2000 psi 138 bar 13.8 mpa	0.9 psi 0.062 bar 0.0062 mpa	30 psia 2.07 bar-a 0.207 mpa	30 psia 2.07 bar-a 0.207 mpa	30 psia 2.07 bar-a 0.207 mpa
2	3626 psi 250 bar 25 mpa	9 psi 0.62 bar 0.062 mpa	150 psia 10.3 bar 1.03 mpa	150 psia 10.3 bar-a 1.03 mpa	150 psi 10.3 bar 1.03 mpa
3	3626 psi 250 bar 25 mpa	36 psi 2.48 bar 0.248 mpa	800 psia 55.2 bar-a 5.52 mpa	800 psia 55.2 bar-a 5.52 mpa	800 psia 55.2 bar 5.52 mpa
4	3626 psi 250 bar 25 mpa	300 psi 20.7 bar 2.07 mpa	4000 psia 276 bar-a 27.6 mpa	4000 psia 276 bar-a 27.6 mpa	4000 psia 276 ba 27.6 mpa
5	3626 psi 250 bar 25 mpa	2000 psi 138 bar 13.8 mpa	N/A	10000psia 690 bar-a 69.0 mpa	10000psia 690 bar 69.0 mpa

Note
The maximum working pressure limit of a DP Sensor with the P9 option is 4500 psig (310,3 bar). The maximum working pressure limit of a DP Sensor with the P0 option is 6092 psig (420 bar).

Table 17. 3051SMV maximum working pressure (3051SMV1M1[X]G[Y]R2E12A1A)

X = DP Range	Y = 3 (DP/AP Range)	Y = 4 (GP/AP Range)
1	800 psi 55.2 bar 5.52 mpa	2000 psi 138 bar 13.8 mpa
2	800 psi 55.2 bar 5.52 mpa	3626 psi 250 bar 25 mpa
3	800 psi 55.2 bar 5.52 mpa	3626 psi 250 bar 25 mpa

Burst pressure limits

Coplanar sensor module (3051S_C, 3051SMV, 3051SF, 3051SAM_ _G or A)

10000 psig (689,5 bar)

In-line sensor module (3051S_T, 3051SAM_ _T or E)

- Ranges 1-4: 11000 psi (758,4 bar)
- Range 5: 26000 psi (1792,64 bar)

Temperature limits

Ambient

-40 to 185 °F (-40 to 85 °C)
With LCD display(1): -40 to 175 °F (-40 to 80 °C)
With option code P0: -20 to 185 °F (-29 to 85 °C)

(1) LCD display may not be readable and LCD display updates will be slower at temperatures below -4 °F (-20 °C).

Storage

-50 to 185 °F (-46 to 85 °C)
With LCD display: -40 to 185 °F (-40 to 85 °C)
With Wireless Output: -40 to 185 °F (-40 to 85 °C)

Process temperature limits

At atmospheric pressures and above:

Coplanar sensor module 3051S_C, 3051SMV, 3051SF, 3051SAM_ _G or A	
Silicone Fill Sensor[1][2]	
with Coplanar Flange	-40 to 250 °F (-40 to 121 °C)[3]
with Traditional Flange	-40 to 300 °F (-40 to 149 °C)[3][4]
with Level Flange	-40 to 300 °F (-40 to 149 °C)[3]
with 305 Integral Manifold	-40 to 300 °F (-40 to 149 °C)[3][4]
Inert Fill Sensor[1][5]	-40 to 185 °F (-40 to 85 °C)[6][7]
In-line sensor module 3051S_T, 3051SAM_ _T or E	
Silicone Fill Sensor[1]	-40 to 250 °F (-40 to 121 °C)[3]
Inert Fill Sensor[1]	-22 to 250 °F (-30 to 121 °C)[3]
3051SAL level transmitter	
Sylthern® XLT	-102 to 293 °F (-75 to 145 °C)
Silicone 704[8]	32 to 401 °F (0 to 205 °C)
Silicone 200	-49 to 401 °F (-45 to 205 °C)
Inert (Halocarbon)	-49 to 320 °F (-45 to 160 °C)
Glycerin and Water	5 to 203 °F (-15 to 95 °C)
Neobee M-20®[9]	5 to 401 °F (-15 to 205 °C)
Propylene Glycol and Water	5 to 203 °F (-15 to 95 °C)

(1) Process temperatures above 185 °F (85 °C) require derating the ambient limits by a 1.5:1 ratio. For example, for process temperature of 195 °F (91 °C), new ambient temperature limit is equal to 170 °F (77 °C). This can be determined as follows:
(195 °F - 185 °F) x 1.5 = 15 °F,
185 °F - 15 °F = 170 °F

(2) 212 °F (100 °C) is the upper process temperature limit for DP Range 0.

(3) 220 °F (104 °C) limit in vacuum service; 130 °F (54 °C) for pressures below 0.5 psia.

(4) -20 °F (-29 °C) is the lower process temperature limit with option code P0.

(5) 32 °F (0 °C) is the lower process temperature limit for DP Range 0.

(6) For 3051S_C, 160 ° F (71 °C) limit in vacuum service.
For 3051SMV_ _ 1, 2, 140 ° F (60 °C) limit in vacuum service.

(7) Not available for 3051S_CA.

(8) Upper temperature limit is 464 °F (240 °C) for a 2-in. direct-mount extension, 500 °F (260 °C) for a 4-in. direct-mount extension, and 599 °F (315 °C) for an In-Line Thermal Optimizer direct-mount connection.

(9) Upper temperature limit is 437 °F (225 °C) for a 2-in. direct-mount extension or greater.

Humidity limits

0–100% relative humidity

Turn-on time[1]

When power is applied to the transmitter during startup, performance will be within specifications per the time period described below:

Transmitter	Turn-on time (typical)
3051S, 3051SF_D, 3051SAL_ _C	2 seconds
Diagnostics	5 seconds
3051SMV, 3051SF_1-7	5 seconds
3051S ERS System	6 seconds

(1) Does not apply to wireless option code X.

Volumetric displacement

Less than 0.005 in^3 (0,08 cm^3)

Damping[1]

Analog output response time to a step change is user-selectable from 0 to 60 seconds for one time constant. For 3051SMV, 3051SF_1-7, each variable can be individually adjusted. Software damping is in addition to sensor module response time.

(1) Does not apply to wireless option code X.

Failure mode alarm

4-20 mA HART (output option code A)

If self-diagnostics detect a gross transmitter failure, the analog signal will be driven offscale to alert the user. Rosemount standard (default), NAMUR, and custom alarm levels are available (see Alarm configuration below).
High or low alarm signal is software-selectable or hardware-selectable via the optional switch (option D1).

Alarm configuration

	High alarm	Low alarm
Default	≥ 21.75 mA	≤ 3.75 mA
NAMUR compliant[1]	≥ 22.5 mA	≤ 3.6 mA
Custom levels[2][3]	20.2 - 23.0 mA	3.4 - 3.8 mA

(1) Analog output levels are compliant with NAMUR recommendation NE 43, see option codes C4 or C5.

(2) Low alarm must be 0.1 mA less than low saturation and high alarm must be 0.1 mA greater than high saturation.

(3) For 3051SMV and option code DA2, low alarm custom values are 3.6 - 3.8 mA.

Safety-certified transmitter failure values[1]

Device Safety accuracy: ± 2.0% of analog output span [2]
Device Safety response time: 1.5 seconds

(1) Does not apply to wireless option code X.

(2) Trip values in the DCS or safety logic solver should be derated by this device safety accuracy.

Physical specifications

Electrical connections

1/2–14 NPT, G1/2, and M20 × 1.5 conduit. HART interface connections fixed to terminal block for Output code A and X.

Process connections

Coplanar sensor module (3051S_C, 3051SMV, 3051SF, 3051SAM_ _G or A)	
Standard	1/4-18 NPT on 2 1/8-in. centers
Flange Adapters	1/2-14 NPT and RC 1/2 on 2-in. (50.8 mm), 2 1/8-in. (54.0 mm), or 2 1/4-in. (57.2 mm) centers
In-line sensor module (3051S_T, 3051SAM_ _T or E)	
Standard	1/2-14 NPT Female
F11 Code	Non-threaded instrument flange (available in SST for sensor ranges 1-4 only)
G11 Code	G 1/2 A DIN 16288 male (available in SST for sensor ranges 1-4 only)
H11 Code	Autoclave type F-250C (Pressure relieved 9/16-18 gland thread; 1/4 OD high pressure tube 60° cone; available in SST for sensor range 5 only)
Level transmitter (3051SAL)	
FF Seal	2-in. (DN 50), 3-in. (DN 80), or 4-in. (DN 100); ANSI Class 150, 300, or 600 flange; JIS 10K, 20K, or 40K flange; PN 10/16 or PN 40 flange
EF Seal	
RF Seal	1-in. (DN 25) or 1.5-in. (DN 40); ANSI Class 150, 300, or 600 flange; JIS 10K, 20K, or 40K flange; PN 40 flange
RT Seal	1/4-18, 1/2-14, 3/4-14, or 1-11.5 NPT Female
SC Seal	1.5-in, 2-in, or 3-in. Hygienic Tri-Clover Style Tri-Clamp
SS Seal	4-in. Hygienic Tank Spud

Process-wetted parts

Process isolating diaphragms

Coplanar sensor module (3051S_C, 3051SMV)	
316L SST (UNS S31603), Alloy C-276 (UNS N10276), Alloy 400 (UNS N04400), Tantalum (UNS R05440), Gold-Plated Alloy 400, Gold-plated 316L SST	
B11 Code	Low side process connection is SST
In-line sensor module (3051S_T)	
316L SST (UNS S31603), Alloy C-276 (UNS N10276)	
Level transmitter (3051SAL)	
FF Seal	316L SST, Alloy C-276, Tantalum
EF Seal	
RF Seal	
RT Seal	
SC Seal	316L SST, Alloy C-276
SS Seal	

Drain/vent valves

316 SST, Alloy C-276, or Alloy 400/K-500[1] material
(Drain vent seat: Alloy 400, Drain vent stem: Alloy K-500)

(1) *Alloy 400/K-500* is not available with 3051SAL.

Process flanges and flange adapters

Plated carbon steel
SST: CF-8M (Cast 316 SST) per ASTM A743
Cast C-276: CW-12MW per ASTM A494
Cast Alloy 400: M-30C per ASTM A494

Wetted o-rings

Glass-filled PTFE
(Graphite-filled PTFE with Isolating Diaphragm code 6)

3051SAL mounting flange

Zinc-cobalt plated CS or 316 SST

3051SAL seal extension

CF-3M (Cast 316L SST, material per ASTM A743) or
CW-12MW (Cast C-276, material per ASTM A494)

Non-wetted parts

Electronics housing

Low-copper aluminum alloy or CF-8M (Cast 316 SST)
NEMA 4X, IP 66, IP 68 (66 ft (20 m) for 168 hours)
Note: IP 68 not available with Wireless Output.

Coplanar sensor module housing

SST: CF-3M (Cast 316L SST)

Bolts

Plated carbon steel per ASTM A449, Type 1
Austenitic 316 SST per ASTM F593
ASTM A453, Class D, Grade 660 SST
ASTM A193, Grade B7M alloy steel
ASTM A193, Class 2, Grade B8M SST
Alloy K-500

Sensor module fill fluid

Silicone is standard.
Inert is available as option code (L1).[1]
Inert for In-Line series uses Fluorinert® FC-43.
Inert for Coplanar series uses Halocarbon.

Seal fill fluid (liquid level only)

3051SAL: Syltherm XLT, Silicone 704, Silicone 200, inert, glycerin and water, Neobee M-20, propylene glycol and water.

Paint for aluminum housing

Polyurethane

Cover o-rings

Buna-N

Wireless antenna

External Antenna (WK / WM): PBT/PC integrated omnidirectional antenna
Remote Antenna (WN): Fiberglass omnidirectional antenna

Power module

Field replaceable, keyed connection eliminates the risk of incorrect installation, Intrinsically Safe Lithium-thionyl chloride Power Module with PBT enclosure

(1) Inert is not available with 3051S_CA.

Shipping weights

Sensor module weights

Coplanar sensor module[1]
3.1 lb (1,4 kg)
In-line sensor module
1.4 lb (0,6 kg)

(1) Flange and bolts not included.

Transmitter weights[1]

Transmitter with coplanar sensor module (3051S_C, 3051SMV, 3051SAM_ _G or A)	
Junction Box housing, SST Flange	6.3 lb (2,8 kg)
PlantWeb housing, SST Flange	6.7 lb (3,1 kg)
Wireless PlantWeb housing, SST Flange	7.3 lb (3,3 kg)
Transmitter with in-line sensor module (3051S_T, 3051SAM_ _T or E)	
Junction Box housing	3.2 lb (1,4 kg)
PlantWeb housing	3.7 lb (1,7 kg)
Wireless PlantWeb housing	4.2 lb (1,9 kg)

(1) Fully functional transmitter with sensor module, housing, terminal block, and covers. Does not include LCD display.

Transmitter option weights

Option code	Option	Add lb (kg)
1J, 1K, 1L	SST PlantWeb housing	3.5 (1,6)
2J	SST Junction Box housing	3.4 (1,5)
7J	SST Quick Connect	0.4 (0,2)
2A, 2B, 2C	Aluminum Junction Box housing	1.1 (0,5)
1A, 1B, 1C	Aluminum PlantWeb housing	1.1 (0,5)
M5	LCD display for Aluminum PlantWeb housing[1], LCD display for SST PlantWeb housing[1]	0.8 (0,4) 1.6 (0,7)
B4	SST Mounting Bracket for Coplanar Flange	1.2 (0,5)
B1, B2, B3	Mounting Bracket for Traditional Flange	1.7 (0,8)
B7, B8, B9	Mounting Bracket for Traditional Flange with SST Bolts	1.7 (0,8)
BA, BC	SST Bracket for Traditional Flange	1.6 (0,7)
B4	SST Mounting Bracket for In-Line	1.3 (0,6)
F12, F22	SST Traditional Flange with SST Drain Vents[2]	3.2 (1,5)
F13, F23	Cast C-276 Traditional Flange with Alloy C-276 Drain Vents[2]	3.6 (1,6)
E12, E22	SST Coplanar Flange with SST Drain Vents[2]	1.9 (0,9)
F14, F24	Cast Alloy 400 Traditional Flange with Alloy 400/K-500 Drain Vents[2]	3.6 (1,6)
F15, F25	SST Traditional Flange with Alloy C-276 Drain Vents[2]	3.2 (1,5)
G21	Level Flange—3 in., 150	12.6 (5,7)
G22	Level Flange—3 in., 300	15.9 (7,2)
G11	Level Flange—2 in., 150	6.8 (3,1)

Option code	Option	Add lb (kg)
G12	Level Flange—2 in., 300	8.2 (3,7)
G31	DIN Level Flange, SST, DN 50, PN 40	7.8 (3,5)
G41	DIN Level Flange, SST, DN 80, PN 40	13.0 (5,9)

(1) Includes LCD display and display cover.

(2) Includes mounting bolts.

Transmitter component weights

Item	Weight in lb. (kg)
Aluminum Standard Cover	0.4 (0,2)
SST Standard Cover	1.3 (0,6)
Aluminum Display Cover	0.7 (0,3)
SST Display Cover	1.5 (0,7)
Wireless Extended Cover	0.7 (0,3)
LCD Display(1)	0.1 (0,04)
Junction Box Terminal Block	0.2 (0,1)
PlantWeb Terminal Block	0.2 (0,1)
Power Module	0.5 (0,2)

(1) Display only

3051SAL weights without supermodule platform, housing, or transmitter options

Flange	Flush lb. (kg)	2-in. Ext. lb (kg)	4-in. Ext. lb (kg)	6-in. Ext. lb (kg)
2-in., 150	9.5 (4,3)	N/A	N/A	N/A
3-in., 150	15.7 (7,1)	16.4 (7,4)	17.6 (8,0)	18.9 (8,6)
4-in., 150	21.2 (9,6)	20.9 (9,5)	22.1 (10,0)	23.4 (10,6)
2-in., 300	11.3 (5,1)	N/A	N/A	N/A
3-in., 300	19.6 (8,9)	20.3 (9,2)	21.5 (9,8)	22.8 (10,3)
4-in., 300	30.4 (13.8)	30.3 (13,7)	31.5 (14,3)	32.8 (14,9)
2-in., 600	12.8 (5,8)	N/A	N/A	N/A
3-in., 600	22.1 (10,0)	22.8 (10,3)	24.0 (10,9)	25.3 (11,5)
DN 50 / PN 40	11.3 (5,1)	N/A	N/A	N/A
DN 80 / PN 40	16.0 (7,3)	16.7 (7,6)	17.9 (8,1)	19.2 (8,7)
DN 100 / PN 10/16	11.2 (5,1)	11.9 (5,4)	13.1 (5,9)	14.4 (6,5)
DN 100 / PN 40	12.6 (5,7)	13.3 (6,0)	14.5 (6,6)	15.8 (7,1)

Rosemount 3051S/3051SFx (Measurement Type D)/ 3051S ERS Certifications

European Directive Information

A copy of the EC Declaration of Conformity can be found at the end of the Quick Start Guide. The most recent revision of the EC Declaration of Conformity can be found at www.rosemount.com.

Ordinary Location Certification from FM Approvals

As standard, the transmitter has been examined and tested to determine that the design meets the basic electrical, mechanical, and fire protection requirements by FM Approvals, a nationally recognized test laboratory (NRTL) as accredited by the Federal Occupational Safety and Health Administration (OSHA).

North America

The US National Electrical Code (NEC) and the Canadian Electrical Code (CEC) permit the use of Division marked equipment in Zones and Zone marked equipment in Divisions. The markings must be suitable for the area classification, gas, and temperature class. This information is clearly defined in the respective codes.

United States of America

E5 FM Explosionproof (XP) and Dust-Ignitionproof (DIP)
Certificate: 3008216
Standards: FM Class 3600 – 2011, FM Class 3615 – 2006, FM Class 3810 – 2005, ANSI/NEMA 250 – 2003
Markings: XP CL I, DIV 1, GP B, C, D; DIP CL II, DIV 1, GP E, F, G; CL III;T5(-50 °C ≤ Ta ≤ +85 °C); Factory Sealed; Type 4X

I5 FM Intrinsic Safety (IS) and Nonincendive (NI)
Certificate: 3012350
Standards: FM Class 3600 – 2011, FM Class 3610 – 2010, FM Class 3611 – 2004, FM Class 3810 – 2005, NEMA 250 –2003
Markings: IS CL I, DIV 1, GP A, B, C, D; CL II, DIV 1, GP E, F, G; Class III; Class 1, Zone 0 AEx ia IIC T4; NI CL 1, DIV 2, GP A, B, C, D; T4(-50°C ≤ Ta ≤ +70°C) [HART]; T4(-50 °C ≤ Ta ≤ +60 °C) [fieldbus]; when connected per Rosemount drawing 03151-1006; Type 4x

Special Condition for Safe Use (X):

1. The Model 3051S/3051S ERS Pressure Transmitter contains aluminum and is considered to constitute a potential risk of ignition by impact or friction. Care must be taken into account during installation and use to prevent impact and friction.

Note
Transmitters marked with NI CL 1, DIV 2 can be installed in Division 2 locations using general Division 2 wiring methods or Nonincendive Field Wiring (NIFW). See Drawing 03051-1006.

IE FM FISCO Field Device
Certificate: 3012350
Standards: FM Class 3600 – 2011, FM Class 3610 – 2010, FM Class 3611 – 2004, FM Class 3810 – 2005, NEMA 250 –2003
Markings: IS CL I, DIV 1, GP A, B, C, D; (-50 °C ≤ Ta ≤ +60 °C); when connected per Rosemount drawing 03151-1006; Type 4x

Special Condition for Safe Use (X):

1. The Model 3051S/3051S ERS Pressure Transmitter contains aluminum and is considered to constitute a potential risk of ignition by impact or friction. Care must be taken into account during installation and use to prevent impact and friction.

Canada

E6 CSA Explosionproof, Dust-Ignitionproof, and Division 2
Certificate: 143113
Standards: CAN/CSA C22.2 No. 0-10, CSA Std C22.2 No. 25-1966, CSA Std C22.2 No. 30-M1986, CAN/CSA C22.2 No. 94-M91, CSA Std C22.2 No. 142-M1987, CSA Std C22.2 No. 213-M1987, ANSI/ISA 12.27.01-2003, CSA Std C22.2 No. 60529:05
Markings: Explosionproof Class I, Division 1, Groups B, C, D; Dust-Ignitionproof Class II, Division 1, Groups E, F, G; Class III; suitable for Class I, Zone 1, Group IIB+H2, T5; suitable for Class I, Division 2, Groups A, B, C, D; suitable for Class I, Zone 2, Group IIC, T5; when connected per Rosemount drawing 03151-1013; Type 4x

I6 CSA Intrinsically Safe
Certificate: 1143113
Standards: CAN/CSA C22.2 No. 0-10, CSA Std C22.2 No. 30-M1986, CAN/CSA C22.2 No. 94-M91, CSA Std C22.2 No. 142-M1987, CSA Std C22.2 No. 157-92, ANSI/ISA 12.27.01-2003, CSA Std C22.2 No. 60529:05
Markings: Intrinsically Safe Class I, Division 1; suitable for Class 1, Zone 0, IIC, T3C; when connected per Rosemount drawing 03151-1016; Type 4x

IF CSA FISCO Field Device
Certificate: 1143113
Standards: CAN/CSA C22.2 No. 0-10, CSA Std C22.2 No. 30-M1986, CAN/CSA C22.2 No. 94-M91, CSA Std C22.2 No. 142-M1987, CSA Std C22.2 No. 157-92, ANSI/ISA 12.27.01-2003, CSA Std C22.2 No. 60529:05
Markings: FISCO Intrinsically Safe Class I, Division 1; suitable for Class I, Zone 0; T3C; when installed per Rosemount drawing 03151-1016; Type 4X

Europe

E1 ATEX Flameproof
Certificate: KEMA 00ATEX2143X
Standards: EN 60079-0:2012, EN 60079-1: 2007, EN 60079-26:2007
Markings:  II 1/2 G Ex d IIC T6...T4 Ga/Gb, T6(-60 °C ≤ Ta ≤ +70 °C), T5/T4(-60 °C ≤ Ta ≤ +80 °C)

Temperature class	Process temperature
T6	-60 °C to +70 °C
T5	-60 °C to +80 °C
T4	-60 °C to +120 °C

Special Conditions for Safe Use (X):

1. The device contains a thin wall diaphragm. Installation, maintenance and use shall take into account the environmental conditions to which the diaphragm will be subjected. The manufacturer's instructions for installation and maintenance shall be followed in detail to assure safety during its expected lifetime.
2. For information on the dimensions of the flameproof joints, the manufacturer shall be contacted.

I1 ATEX Intrinsic Safety
Certificate: BAS01ATEX1303X
Standards: EN 60079-0: 2012, EN 60079-11: 2012
Markings: ⟨Ex⟩ II 1 G Ex ia IIC T4 Ga, T4(-60 °C ≤ Ta ≤ +70 °C)

	HART	Fieldbus	RTD (for 3051SFx)
Voltage U_i	30 V	30 V	5 V
Current I_i	300 mA	300 mA	500 mA
Power P_i	1 W	1.3 W	0.63 W
Capacitance C_i	12 nF	0	0
Inductance L_i	0	0	0

Special Conditions for Safe Use (X):

1. The Model 3051S Transmitters fitted with transient protection are not capable of withstanding the 500V test as defined in Clause 6.3.13 of EN 60079-11:2012. This must be taken into account during installation.
2. The terminal pins of the Model 3051S SuperModule must be provided with a degree of protection of at least IP20 in accordance with IEC/EN 60529.

IA ATEX FISCO Field Device
Certificate: BAS01ATEX1303X
Standards: EN 60079-0: 2012, EN 60079-11: 2012
Markings: ⟨Ex⟩ II 1 G Ex ia IIC T4 Ga, T4(-60 °C ≤ Ta ≤ +70 °C)

	FISCO
Voltage U_i	17.5 V
Current I_i	380 mA
Power P_i	5.32 W
Capacitance C_i	0
Inductance L_i	0

Special Conditions for Safe Use (X):

1. The Model 3051S Transmitters fitted with transient protection are not capable of withstanding the 500V test as defined in Clause 6.3.13 of EN 60079-11:2012. This must be taken into account during installation.
2. The terminal pins of the Model 3051S SuperModule must be provided with a degree of protection of at least IP20 in accordance with IEC/EN 60529.

ND ATEX Dust
Certificate: BAS01ATEX1374X
Standards: EN 60079-0: 2012, EN 60079-31: 2009
Markings: ⟨Ex⟩ II 1 D Ex ta IIIC T105 °C T_{500}95 °C Da, (-20 °C ≤ Ta ≤ +85 °C), V_{max} = 42.4V

Special Conditions for Safe Use (X):

1. Cable entries must be used which maintain the ingress protection of the enclosure to at least IP66.
2. Unused cable entries must be filled with suitable blanking plugs which maintain the ingress protection of the enclosure to at least IP66.
3. Cable entries and blanking plugs must be suitable for the ambient temperature range of the apparatus and capable of withstanding a 7J impact test.
4. The SuperModule(s) must be securely screwed in place to maintain the ingress protection of the enclosure(s).

N1 ATEX Type n
Certificate: BAS01ATEX3304X
Standards: EN 60079-0: 2012, EN 60079-15: 2010
Markings: ⟨Ex⟩ II 3 G Ex nA IIC T5 Gc, (-40 °C ≤ Ta ≤ +85 °C), V_{max} = 45V

Special Condition for Safe Use (X):

1. The equipment is not capable of withstanding the 500V insulation test required by clause 6.5 of EN 60079-15:2010. This must be taken into account when installing the equipment.

Note
RTD Assembly is not included with the 3051SFx Type n Approval.

International

E7 IECEx Flameproof and Dust
Certificate: IECEx KEM 08.0010X (Flameproof)
Standards: IEC 60079-0:2011, IEC 60079-1: 2007, IEC 60079-26:2006, IEC 60079-31:2008
Markings: Ex d IIC T6...T4 Ga/Gb, T6(-60 °C ≤ Ta ≤ +70 °C), T5/T4(-60 °C ≤ Ta ≤ +80 °C)

Temperature class	Process temperature
T6	-60 °C to +70 °C
T5	-60 °C to +80 °C
T4	-60 °C to +120 °C

Special Conditions for Safe Use (X):

1. The device contains a thin wall diaphragm. Installation, maintenance and use shall take into account the environmental conditions to which the diaphragm will be subjected. The manufacturer's instructions for installation and maintenance shall be followed in detail to assure safety during its expected lifetime.
2. For information on the dimensions of the flameproof joints the manufacturer shall be contacted.

Certificate: IECEx BAS 09.0014X (Dust)
Standards: IEC 60079-0:2011, IEC 60079-31:2008
Markings: Ex ta IIIC T105°C T_{500}95°C Da, (-20 °C ≤ Ta ≤ +85 °C), Vmax = 42.4V

Special Conditions for Safe Use (X):

1. Cable entries must be used which maintain the ingress protection of the enclosure to at least IP66.
2. Unused cable entries must be filled with suitable blanking plugs which maintain the ingress protection of the enclosure to at least IP66.
3. Cable entries and blanking plugs must be suitable for the ambient temperature range of the apparatus and capable of withstanding a 7J impact test.
4. The 3051S- SuperModule must be securely screwed in place to maintain the ingress protection of the enclosure.

I7 IECEx Intrinsic Safety
Certificate: IECEx BAS 04.0017X
Standards: IEC 60079-0: 2011, IEC 60079-11: 2011
Markings: Ex ia IIC T4 Ga, T4(-60 °C ≤ Ta ≤ +70 °C)

	HART	Fieldbus	RTD (for 3051SFx)
Voltage U_i	30 V	30 V	5 V
Current I_i	300 mA	300 mA	500 mA
Power P_i	1 W	1.3 W	0.63 W
Capacitance C_i	12 nF	0	0
Inductance L_i	0	0	0

Special Conditions for Safe Use (X):

1. The Model 3051S Transmitters fitted with transient protection are not capable of withstanding the 500V test as defined in Clause 6.3.13 of IEC 60079-11:2011. This must be taken into account during installation.
2. The terminal pins of the Model 3051S SuperModule must be provided with a degree of protection of at least IP20 in accordance with IEC/EN 60529.
3. The Model 3051S enclosure may be made of aluminum alloy and given a protective polyurethane paint finish; however, care should be taken to protect it from impact or abrasion if located in a zone 0 area.

IG IECEx FISCO
Certificate: IECEx BAS 04.0017X
Standards: IEC 60079-0: 2011, IEC 60079-11: 2011
Markings: Ex ia IIC T4 Ga, T4(-60 °C ≤ Ta ≤ +70 °C)

	FISCO
Voltage U_i	17.5 V
Current I_i	380 mA
Power P_i	5.32 W
Capacitance C_i	0
Inductance L_i	0

Special Conditions for Safe Use (X):

1. The Model 3051S Transmitters fitted with transient protection are not capable of withstanding the 500V test as defined in Clause 6.3.13 of IEC 60079-11:2011. This must be taken into account during installation.
2. The terminal pins of the Model 3051S SuperModule must be provided with a degree of protection of at least IP20 in accordance with IEC/EN 60529.
3. The Model 3051S enclosure may be made of aluminum alloy and given a protective polyurethane paint finish; however, care should be taken to protect it from impact or abrasion if located in a zone 0 area.

N7 IECEx Type n
Certificate: IECEx BAS 04.0018X
Standards: IEC 60079-0: 2011, IEC 60079-15: 2010
Markings: Ex nA IIC T5 Gc, (-40 °C ≤ Ta ≤ +85 °C)

Special Conditions for Safe Use (X):

1. The equipment is not capable of withstanding the 500V insulation test required by clause 6.5 of IEC 60079-15:2010. This must be taken into account when installing the equipment.

Brazil

E2 INMETRO Flameproof
Certificate: CEPEL 03.0140X [Mfg USA, Singapore, Germany], CEPEL 07.1413X [Mfg Brazil]
Standards: ABNT NBR IEC 60079-0:2008, ABNT NBR IEC 60079-1:2009, ABNT NBR IEC 60529:2009
Markings: Ex d IIC T* Ga/Gb, T6(-40 °C ≤ Ta ≤ +65 °C), T5(-40 °C ≤ Ta ≤ +80 °C), IP66(Al)/IP66W(SST)

Special Conditions for Safe Use (X):

1. For ambient temperature above 60 °C, cable wiring must have minimum isolation temperature of 90 °C, to be in accordance to equipment operation temperature.
2. The device contains a thin wall diaphragm. Installation, maintenance and use shall take into account the environmental conditions to which the diaphragm will be subjected. The manufacturer's instructions for installation and maintenance shall be followed in detail to assure safety during its expected lifetime.

I2 INMETRO Intrinsic Safety
Certificate: CEPEL 05.0722X [Mfg USA, Singapore, Germany], CEPEL 07.1414X [Mfg Brazil]
Standards: ABNT NBR IEC 60079-0:2008, ABNT NBR IEC 60079-11:2009, ABNT NBR IEC 60079-26:2008, ABNT NBR IEC 60529:2009
Markings: Ex ia IIC T4 Ga, T4(-20 °C ≤ Ta ≤ +70 °C), IP66(Al)/IP66W(SST)

Special Conditions for Safe Use (X):

1. The Model 3051S Transmitters fitted with transient protection are not capable of withstanding the 500V test as defined in Clause 6.4.12 of IEC 60079-11. This must be taken into account during installation.

	HART	Fieldbus	RTD (for 3051SFx)
Voltage U_i	30 V	30 V	5 V
Current I_i	300 mA	300 mA	500 mA
Power P_i	1 W	1.3 W	0.63 W
Capacitance C_i	12 nF	0	0
Inductance L_i	0	0	0

IB INMETRO FISCO
Certificate: CEPEL 05.0722X [Mfg USA, Singapore, Germany], CEPEL 07.1414X [Mfg Brazil]
Standards: ABNT NBR IEC 60079-0:2008, ABNT NBR IEC 60079-11:2009, ABNT NBR IEC 60079-26:2008, ABNT NBR IEC 60529:2009
Markings: Ex ia IIC T4 Ga, T4(-20 °C ≤ Ta ≤ +40 °C), IP66(Al)/IP66W(SST)

	FISCO
Voltage U_i	17.5 V
Current I_i	380 mA
Power P_i	5.32 W
Capacitance C_i	0
Inductance L_i	0

Special Condition for Safe Use (X):

1. The Model 3051S Transmitters fitted with transient protection are not capable of withstanding the 500V test as defined in Clause 6.4.12 of IEC 60079-11. This must be taken into account during installation.

China

E3 China Flameproof and Dust Ignition-proof
Certificate: 3051S: GYJ091035 [Mfg USA], GYJ111400X [Mfg China, Singapore]
3051SFx: GYJ071086 [Mfg USA, China, Singapore]
Standards: 3051S: GB3836.1-2000, GB3836.2-2000, GB12476.1-20003051SFx: GB3836.1-2000, GB3836.2-2000, GB12476.1-2000
Markings: 3051S: Ex d IIC T5/T6; DIP A20T_A105°C; IP66
3051SFx: Ex d IIC T5/T6; Ex d IIB+H_2T3~T5; DIP A21 T_A T3~T5

Special Conditions for Safe Use (X):

1. Only the pressure transmitters, consisting of 3051SC Series, 3051ST Series, 3051SL Series and 300S Series, are certified.
2. The ambient temperature range is (-20 ~+60) °C.
3. The relation between temperature class and maximum temperature of process medium is as follows:

Temperature class	Temperature of process medium (°C)
T5	≤ 95 °C
T4	≤ 130 °C
T3	≤ 190 °C

4. The earth connection facility in the enclosure should be connected reliably.
5. During installation, use and maintenance of transmitter, observe the warning "Don't open the cover when the circuit is alive."
6. During installation, there should be no mixture harm to flameproof housing.
7. Cable entry, certified by NEPSI with type of protection Ex d IIC in accordance with GB3836.1-2000 and GB3836.2-2000, should be applied when installation in hazardous location. 5 full threads should be in engagement when the cable entry is assembled onto the transmitter. When pressure transmitter is used in the presence of combustible dust, the ingress of protection of the cable entry should be IP66.
8. The diameter of cable should observe the instruction manual of cable entry. The compressing nut should be fastened. The aging of seal ring should be changed in time.
9. Maintenance should be done in non-hazardous location.
10. End users are not permitted to change any components inside.
11. When installation, use and maintenance of transmitter, observe following standards:
    - GB3836.13-1997 "Electrical apparatus for explosive gas atmospheres Part 13: Repair and overhaul for apparatus used in explosive gas atmospheres"
    - GB3836.15-2000 "Electrical apparatus for explosive gas atmospheres Part 15: Electrical installations in hazardous area (other than mines)"
    - GB50257-1996 "Code for construction and acceptance of electric device for explosion atmospheres and fire hazard electrical equipment installation engineering"
    - GB15577-1995 "Safe regulation for explosive dust atmospheres"
    - GB12476.2-2006 "Electrical apparatus for use in the presence of combustible dust – Part 1-2: Electrical apparatus protected by enclosures and surface temperature limitation – Selection, installation and maintenance"

I3 China Intrinsic Safety

Certificate: 3051S: GYJ111401X [Mfg USA, China, Singapore]
3051SF: GYJ11.1707X [Mfg USA, China, Singapore]
Standards: 3051S: GB3836.1-2000, GB3836.4-2000
3051SF: GB3836.1/4-2010, GB3836.20-2010, GB12476.1-2000
Markings: 3051S: Ex ia IIC T4
3051SF: Ex ia IIC T4 Ga, DIP A20 T_A105 °C IP66

Special Conditions for Safe Use (X):

1. Symbol "X" is used to denote specific conditions of use:
   For output code A and F: This apparatus is not capable of withstanding the 500V r.m.s. insulation test required by Clause 6.4.12 of GB3836.4-2000.
2. The ambient temperature range is:

Output code	Ambient temperature
A	-50 °C ≤ Ta ≤+70 °C
F	-50 °C ≤ Ta ≤+60 °C

3. Intrinsically safe parameters:

Output code	Housing code	Display code	Maximum input voltage: U_i (V)	Maximum input current: I_i (mA)	Maximum input power: P_i (W)	Maximum internal parameters: C_i (nF)	Maximum internal parameters: L_i (uH)
A	=00	/	30	300	1	38	0
A	≠00	/	30	300	1	11.4	2.4
A	≠00	M7/M8 /M9	30	300	1	0	58.2
F	≠00	/	30	300	1.3	0	0
F FISCO	≠00	/	17.5	500	5.5	0	0

4. The product should be used with Ex-certified associated apparatus to establish explosion protection system that can be used in explosive gas atmospheres. Wiring and terminals should comply with the instruction manual of the product and associated apparatus.
5. The cable between this product and associated apparatus should be shielded cables (the cables must have insulated shield). The shield has to be grounded reliably in non-hazardous area.
6. The product complies to the requirements for FISCO field devices specified in IEC60079-27:2008. For the connection of an intrinsically safe circuit in accordance FISCO model, FISCO parameters of this product are as above.
7. End users are not permitted to change any components inside, but to settle the problem in conjunction with manufacturer to avoid damage to the product.
8. When installation, use and maintenance of this product, observe the following standards:
    - GB3836.13-1997 "Electrical apparatus for explosive gas atmospheres Part 13: Repair and overhaul for apparatus used in explosive gas atmospheres"
    - GB3836.15-2000 "Electrical apparatus for explosive gas atmospheres Part 15: Electrical installations in hazardous area (other than mines)"
    - GB3836.16-2006 "Electrical apparatus for explosive gas atmospheres Part 16: Inspection and maintenance of electrical installation (other than mines)"
    - GB50257-1996 "Code for construction and acceptance of electric device for explosion atmospheres and fire hazard electrical equipment installation engineering"

N3 China Type n

Certificate: 3051S: GYJ101112X [Mfg China]
3051SF: GYJ101125X [Mfg China]
Standards: GB3836.1-2000, GB3836.8-2003
Markings: Ex nL IIC T5

Special Conditions for Safe Use (X):

1. Symbol "X" is used to denote specific conditions of use: The apparatus is not capable of withstanding the 500V test to earth for one minute. This must be taken into consideration during installation.
2. The ambient temperature range is: -40 °C ≤ Ta ≤ 70 °C.
3. Cable glands, conduit or blanking plugs, certified by NEPSI with Ex e or Ex n protection type and IP66 degree of protection provided by enclosure, should be used on external connections and redundant cable entries.
4. Energy limiting parameters:

Model	Terminal	Maximum input voltage: U_i (V)	Maximum input current: I_i (mA)	Maximum input power: P_i (W)	Maximum internal parameters: C_i (nF)	Maximum internal parameters: L_i (uH)
3051S-C/T	1 to 5	30	300	1	30	0
3051S HART, 4-20mA/SIS	+,- and CAN	30	300	1	11.4	0
3051S fieldbus/Profibus	+ and -	30	300	1.3	0	0
3051S FISCO	+ and -	17.5	380	5.32	0	0
Remote Mount Housing	+ and -	30	300	1	24	60

Note
Remote Mount Housing is for direct connection to the Model 3051S HART Terminals +,- and CAN by a cable whose maximum capacitance and inductance do not exceed 24nF and 60uH respectively.

5. 3051S type Pressure Transmitter comply to the requirements for FISCO field devices specified in IEC60079-27:2008. For the connection of an intrinsically safe circuit in accordance FISCO model, FISCO parameters of 3051S type Pressure Transmitter are listed in the table above.
6. The product should be used with associated energy-limited apparatus certified by NEPSI in accordance with GB 3836.1-2000 and GB 3836.8-2003 to establish explosion protection system that can be used in explosive gas atmospheres.
7. The cables between this product and associated energy-limited apparatus should be shielded cables (the cables must have insulated shield). The shielded has to be grounded reliably in non-hazardous area.
8. Maintenance should be done in non-hazardous location.
9. End users are not permitted to change any components inside, but to settle the problem in conjunction with manufacturer to avoid damage to the product.
10. When installation, use and maintenance of this product, observe following standards:
    - GB3836.13-1997 "Electrical apparatus for explosive gas atmospheres Part 13: Repair and overhaul for apparatus used in explosive gas atmospheres"
    - GB3836.15-2000 "Electrical apparatus for explosive gas atmospheres Part 15: Electrical installations in hazardous area (other than mines)"
    - GB3836.16-2006 "Electrical apparatus for explosive gas atmospheres Part 16: Inspection and maintenance of electrical installation (other than mines)"
    - GB50257-1996 "Code for construction and acceptance of electric device for explosion atmospheres and fire hazard electrical equipment installation engineering".

Japan

E4 Japan Flameproof

Certificate: TC15682, TC15683, TC15684, TC15685, TC15686, TC15687, TC15688, TC15689, TC15690, TC17099, TC17100, TC17101, TC17102, TC18876
Markings: Ex d IIC T6

Combinations

K1 Combination of E1, I1, N1, and ND

K2 Combination of E2 and I2

K5 Combination of E5 and I5

K6 Combination of E6 and I6

K7 Combination of E7, I7, and N7

KA Combination of E1, I1, E6, and I6

KB Combination of E5, I5, E6, and I6

KC Combination of E1, I1, E5, and I5

KD Combination of E1, I1, E5, I5, E6, and I6

KG Combination of IA, IE, IF, and IG

Additional Certifications

SBS American Bureau of Shipping (ABS) Type Approval
Certificate: 00-HS145383-6-PDA
Intended Use: Measure gauge or absolute pressure of liquid, gas or vapor applications on ABS classed vessels, marine, and offshore installations.
ABS Rules: 2013 Steel Vessels Rules 1-1-4/7.7, 1-1-A3, 4-8-3/1.7, 4-8-3/1.11.1, 4-8-3/13.1

D3 Custody Transfer – Measurement Canada Accuracy Approval
Certificate: AG-0501, AV-2380C

Rosemount 3051S and 3051SMV Wireless Certifications

European Directive Information

A copy of the EC Declaration of Conformity can be found at the end of the Quick Start Guide. The most recent revision of the EC Declaration of Conformity can be found at www.rosemount.com.

Telecommunication compliance

All wireless devices require certification to ensure that they adhere to regulations regarding the use of the RF spectrum. Nearly every country requires this type of product certification.
Emerson is working with governmental agencies around the world to supply fully compliant products and remove the risk of violating country directives or laws governing wireless device usage.

FCC and IC

This device complies with Part 15 of the FCC Rules. Operation is subject to the following conditions: This device may not cause harmful interference. This device must accept any interference received, including interference that may cause undesired operation. This device must be installed to ensure a minimum antenna separation distance of 20 cm from all persons.

Ordinary Location Certification from FM Approvals

As standard, the transmitter has been examined and tested to determine that the design meets the basic electrical, mechanical, and fire protection requirements by FM Approvals, a nationally recognized test laboratory (NRTL) as accredited by the Federal Occupational Safety and Health Administration (OSHA).

North America

The US National Electrical Code (NEC) and the Canadian Electrical Code (CEC) permit the use of Division marked equipment in Zones and Zone marked equipment in Divisions. The markings must be suitable for the area classification, gas, and temperature class. This information is clearly defined in the respective codes.

United States of America

I5 FM Intrinsic Safety (IS) and Nonincendive (NI)
Certificate: 3027705
Standards: FM Class 3600 – 2011, FM Class 3610 – 2010, FM Class 3611 – 2004, FM Class 3810 – 2005, NEMA 250 – 2003
Markings: IS CL 1, DIV 1, GP 1, B, C, D; CL II, DIV 1, GP E, F, G; CL III; CL 1, ZONE 0 AEx ia IIC T4; NI CL 1, DIV2, GPA, B, C, D, T4; DIP CL II, DIV 1, GP E, F, G; CL III, T5; T4 (-50 °C ≤ Ta ≤ +70 °C)/T5(-50 °C ≤ Ta ≤ +85 °C); when connected per Rosemount drawing 03151-1000; Type 4X

Special Conditions for Safe Use (X):

1. The model 3051SMV Wireless PDP Transmitter shall only be used with the 701PBKKF Rosemount SmartPower Battery Pack.
2. The transmitter may contain more than 10% aluminum and is considered a potential risk of ignition by impact or friction.
3. The surface resistivity of the antenna is greater than 1GΩ . To avoid electrostatic charge build-up, it must not be rubbed or cleaned with solvents or a dry cloth.

Note
Transmitters marked with NI CL 1, DIV 2 can be installed in Division 2 locations using general Division 2 wiring methods or Nonincendive Field Wiring (NIFW). See Drawing 03051-1000.

Canada

I6 CSA Intrinsically Safe
Certificate: 1143113
Standards: CAN/CSA C22.2 No. 0-10, CSA Std C22.2 No. 30-M1986, CAN/CSA C22.2 No. 94-M91, CSA Std C22.2 No. 142-M1987, CSA Std C22.2 No. 157-92, ANSI/ISA 12.27.01-2003, CSA Std C22.2 No. 60529:05
Markings: Intrinsically Safe Class I, Division 1; suitable for Class 1, Zone 0, IIC, T3C; when connected per Rosemount drawing 03151-1010; Type 4x

Europe

I1 ATEX Intrinsic Safety
Certificate: Baseefa13ATEX0127X
Standards: EN 60079-0: 2012, EN 60079-11: 2012
Markings: II 1 G Ex ia IIC T4 Ga, T4(-60 °C ≤ Ta ≤+70 °C)

Special Conditions for Safe Use (X):

1. The Model 3051S Wireless and Model 3051SMV Wireless enclosure may be made of aluminum alloy and given a protective polyurethane paint finish; however, care should be taken to protect it from impact or abrasion if located in a zone 0 area.
2. The surface resistivity of the antenna is greater than 1GΩ . To avoid electrostatic charge build-up, it must not be rubbed or cleaned with solvents or dry cloth.

International

I7 IECEx Intrinsic Safety
Certificate: IECEx BAS 13.0068X
Standards: IEC 60079-0: 2011, IEC 60079-11: 2011
Markings: Ex ia IIC T4 Ga, T4(-60 °C ≤ Ta ≤ +70 °C)

Special Conditions for Safe Use (X):

1. The Model 3051S Wireless and Model 3051SMV Wireless enclosure may be made of aluminum alloy and given a protective polyurethane paint finish; however, care should be taken to protect it from impact or abrasion if located in a zone 0 area.
2. The surface resistivity of the antenna is greater than 1GΩ . To avoid electrostatic charge build-up, it must not be rubbed or cleaned with solvents or dry cloth.

Brazil

I2 INMETRO Intrinsic Safety
Certificate: CEPEL 08.1618
Standards: ABNT NBR IEC60079-0:2008, ABNT NBR IEC60079-11:2009, ABNT NBR IEC 60079-26:2008, ABNT NBR IEC 60529:2009
Markings: Ex ia IIC T5/T4 Ga, T5(-60 °C ≤ Ta ≤ +40 °C), T4(-60 °C ≤ Ta ≤ +70 °C), IP66(Al)/IP66W(SST)

Note
Not currently available on the 3051S MultiVariable Wireless Transmitter.

China

I3 China Intrinsic Safety
Certificate: GYJ11.1401X; GYJ11.1707X
Standards: GB3836.1-2010, GB3836.4-2010, GB3836.20-2010, GB12476.1-2000
Markings: Ex ia IIC T4(-50 °C~+70 °C)

Special Condition for Safe Use (X):

1. See appropriate certificate.

Note
Not currently available on the 3051S MultiVariable Wireless Transmitter.

Japan

I4 TIIS Intrinsically Safe
Certificate: TC18649, TC18650, TC18657
Markings: Ex ia IIC T4, T4 -20 ~ 60 °C

Note
Not currently available on the 3051S MultiVariable Wireless Transmitter.

Rosemount 3051SMV/3051SFx (Measurement Type 1-7) Certifications

European Directive Information

A copy of the EC Declaration of Conformity can be found at the end of the Quick Start Guide. The most recent revision of the EC Declaration of Conformity can be found at www.rosemount.com.

Ordinary Location Certification from FM Approvals

As standard, the transmitter has been examined and tested to determine that the design meets the basic electrical, mechanical, and fire protection requirements by FM Approvals, a nationally recognized test laboratory (NRTL) as accredited by the Federal Occupational Safety and Health Administration (OSHA).

North America

The US National Electrical Code (NEC) and the Canadian Electrical Code (CEC) permit the use of Division marked equipment in Zones and Zone marked equipment in Divisions. The markings must be suitable for the area classification, gas, and temperature class. This information is clearly defined in the respective codes.

United States of America

E5 FM Explosionproof (XP) and Dust-Ignitionproof (DIP)
Certificate: 3008216
Standards: FM Class 3600 – 2011, FM Class 3615 – 2006, FM Class 3810 – 2005, ANSI/NEMA 250 – 2003
Markings: XP CL I, DIV 1, GP B, C, D; DIP CL II, DIV 1, GP E, F, G; CL III; T5(-50°C ≤ Ta ≤ +85°C); Factory Sealed; Type 4X

I5 FM Intrinsic Safety (IS) and Nonincendive (NI)

Certificate: 3031960
Standards: FM Class 3600 – 1998, FM Class 3610 – 2007, FM Class 3611 – 2004, FM Class 3810 – 2005, NEMA 250 – 1991
Markings: IS CL I, DIV 1, GP A, B, C, D; CL II, DIV 1, GP E, F, G; Class III; Class 1, Zone 0 AEx ia IIC T4; NI CL 1, DIV 2, GP A, B, C, D; T4(-50°C ≤ Ta ≤ +70°C); when connected per Rosemount drawing 03151-1206; Type 4x

Note
Transmitters marked with NI CL 1, DIV 2 can be installed in Division 2 locations using general Division 2 wiring methods or Nonincendive Field Wiring (NIFW). See Drawing 03051-1206.

Canada

E6 CSA Explosionproof, Dust-Ignitionproof, and Division 2
Certificate: 1143113
Standards: CAN/CSA C22.2 No. 0-10, CSA Std C22.2 No. 25-1966, CSA Std C22.2 No. 30-M1986, CAN/CSA C22.2 No. 94-M91, CSA Std C22.2 No. 142-M1987, CSA Std C22.2 No. 213-M1987, ANSI/ISA 12.27.01-2003, CSA Std C22.2 No. 60529:05
Markings: Explosionproof Class I, Division 1, Groups B, C, D; Dust-Ignitionproof Class II, Division 1, Groups E, F, G; Class III; suitable for Class I, Division 2, Groups A, B, C, D; Type 4x

I6 CSA Intrinsically Safe
Certificate: 1143113
Standards: CAN/CSA C22.2 No. 0-10, CSA Std C22.2 No. 30-M1986, CAN/CSA C22.2 No. 94-M91, CSA Std C22.2 No. 142-M1987, CSA Std C22.2 No. 157-92, ANSI/ISA 12.27.01-2003, CSA Std C22.2 No. 60529:05
Markings: Intrinsically Safe Class I, Division 1; suitable for Class 1, Zone 0, IIC, T3C; when connected per Rosemount drawing 03151-1207; Type 4x

Europe

E1 ATEX Flameproof
Certificate: KEMA 00ATEX2143X
Standards: EN 60079-0:2012, EN 60079-1: 2007, EN 60079-26:2007
Markings: II 1/2 G Ex d IIC T6...T4 Ga/Gb, T6(-60 °C ≤ Ta ≤ +70 °C), T5/T4(-60 °C ≤ Ta ≤ +80 °C)

Temperature class	Process temperature
T6	-60 °C to +70 °C
T5	-60 °C to +80 °C
T4	-60 °C to +120 °C

Special Conditions for Safe Use (X):

1. The device contains a thin wall diaphragm. Installation, maintenance and use shall take into account the environmental conditions to which the diaphragm will be subjected. The manufacturer's instructions for installation and maintenance shall be followed in detail to assure safety during its expected lifetime.
2. For information on the dimensions of the flameproof joints the manufacturer shall be contacted.

I1 ATEX Intrinsic Safety
Certificate: Baseefa08ATEX0064X
Standards: EN 60079-0: 2012, EN 60079-11: 2012
Markings: ⟨Ex⟩ II 1 G Ex ia IIC T4 Ga, T4(-60°C ≤ Ta ≤ +70°C)

	HART	RTD (for 3051SFx)
Voltage U_i	30 V	30 V
Current I_i	300 mA	2.31 mA
Power P_i	1 W	17.32 mW
Capacitance C_i	14.8 nF	0
Inductance L_i	0	0

Special Conditions for Safe Use (X):

1. If the equipment is fitted with the optional 90V transient suppressor, it is incapable of withstanding the 500V isolation from earth test and this must be taken into account during installation
2. The enclosure may be made of aluminum alloy and given a protective polyurethane paint finish; however, care should be taken to protect it from impact or abrasion if located in a Zone 0 environment.

ND ATEX Dust
Certificate: BAS01ATEX1374X
Standards: EN 60079-0: 2012, EN 60079-31: 2009
Markings: ⟨Ex⟩ II 1 D Ex ta IIIC T105°C T_{500}95 °C Da, (-20 °C ≤ Ta ≤ +85 °C), V_{max} = 42.4V

Special Conditions for Safe Use (X):

1. Cable entries must be used which maintain the ingress protection of the enclosure to at least IP66.
2. Unused cable entries must be filled with suitable blanking plugs which maintain the ingress protection of the enclosure to at least IP66.
3. Cable entries and blanking plugs must be suitable for the ambient temperature range of the apparatus and capable of withstanding a 7J impact test.
4. The SuperModule(s) must be securely screwed in place to maintain the ingress protection of the enclosure(s).

N1 ATEX Type n
Certificate: Baseefa08ATEX0065X
Standards: EN 60079-0: 2012, EN 60079-15: 2010
Markings: ⟨Ex⟩ II 3 G Ex nA IIC T4 Gc, (-40 °C ≤ Ta ≤ 70 °C), V_{max} = 45V

Special Condition for Safe Use (X):

1. If fitted with a 90V transient suppressor, the equipment is not capable of withstanding the 500V electrical strength test as defined in Clause 6.5.1 of EN 60079-15:2010. This must be taken into account during installation.

International

E7 IECEx Flameproof and Dust
Certificate: IECEx KEM 08.0010X (Flameproof)
Standards: IEC 60079-0:2011, IEC 60079-1: 2007, IEC 60079-26:2006
Markings: Ex d IIC T6...T4 Ga/Gb, T6(-60°C ≤ Ta ≤ +70°C), T5/T4(-60°C ≤ Ta ≤ +80°C)

Temperature class	Process temperature
T6	-60 °C to +70 °C
T5	-60 °C to +80 °C
T4	-60 °C to +120 °C

Special Conditions for Safe Use (X):

1. The device contains a thin wall diaphragm. Installation, maintenance and use shall take into account the environmental conditions to which the diaphragm will be subjected. The manufacturer's instructions for installation and maintenance shall be followed in detail to assure safety during its expected lifetime.
2. For information on the dimensions of the flameproof joints the manufacturer shall be contacted.

Certificate: IECEx BAS 09.0014X (Dust)
Standards: IEC 60079-0:2011, IEC 60079-31:2008
Markings: Ex ta IIIC T105 °C T_{500}95 °C Da, (-20 °C ≤ Ta ≤ +85 °C), V_{max} = 42.4V

Special Conditions for Safe Use (X):

1. Cable entries must be used which maintain the ingress protection of the enclosure to at least IP66.
2. Unused cable entries must be filled with suitable blanking plugs which maintain the ingress protection of the enclosure to at least IP66.
3. Cable entries and blanking plugs must be suitable for the ambient temperature range of the apparatus and capable of withstanding a 7J impact test.
4. The 3051S- SuperModule must be securely screwed in place to maintain the ingress protection of the enclosure.

I7 IECEx Intrinsic Safety
Certificate: IECEx BAS 08.0025X
Standards: IEC 60079-0: 2011, IEC 60079-11: 2011
Markings: Ex ia IIC T4 Ga, T4(-60 °C ≤ Ta ≤ +70 °C)

	HART	RTD (for 3051SFx)
Voltage U_i	30 V	30 V
Current I_i	300 mA	2.31 mA
Power P_i	1 W	17.32 mW
Capacitance C_i	14.8 nF	0
Inductance L_i	0	0

Special Conditions for Safe Use (X):

1. If the equipment is fitted with the optional 90V transient suppressor, it is incapable of withstanding the 500V isolation from earth test and this must be taken into account during installation.
2. The enclosure may be made of aluminum alloy and given a protective polyurethane paint finish; however, care should be taken to protect it from impact or abrasion if located in a Zone 0 environment.

N7 IECEx Type n
Certificate: IECEx BAS 08.0026X
Standards: IEC 60079-0: 2011, IEC 60079-15: 2010
Markings: Ex nA IIC T5 Gc, (-40 °C ≤ Ta ≤ 70 °C)

Special Condition for Safe Use (X):

1. If fitted with a 90V transient suppressor, the equipment is not capable of withstanding the 500V electrical strength test as defined in Clause 6.5.1 of IEC 60079-15:2010. This must be taken into account during installation.

Brazil

E2 INMETRO Flameproof
Certificate: CEPEL 03.0140X [Mfg USA, Singapore, Germany], CEPEL 07.1413X [Mfg Brazil]
Standards: ABNT NBR IEC 60079-0:2008, ABNT NBR IEC 60079-1:2009, ABNT NBR IEC 60529:2009
Markings: Ex d IIC T* Ga/Gb, T6(-40 °C ≤ T_a ≤ +65 °C), T5(-40 °C ≤ T_a ≤ +80 °C), IP66(Al)/IP66W(SST)

Special Conditions for Safe Use (X):

1. For ambient temperature above 60 °C, cable wiring must have minimum isolation temperature of 90 °C, to be in accordance to equipment operation temperature.
2. The device contains a thin wall diaphragm. Installation, maintenance and use shall take into account the environmental conditions to which the diaphragm will be subjected. The manufacturer's instructions for installation and maintenance shall be followed in detail to assure safety during its expected lifetime.

I2 INMETRO Intrinsic Safety
Certificate: NCC 12.1158X [Mfg USA, Germany]
Standards: ABNT NBR IEC 60079-0:2008, ABNT NBR IEC 60079-11:2009, ABNT NBR IEC 60079-26:2008
Markings: Ex ia IIC T4 Ga, T4(-60 °C ≤ T_a ≤ +70 °C), IP66(Al)/IP66W(SST)

Special Conditions for Safe Use (X):

1. If the equipment is fitted with the optional 90V transient suppressor, it is incapable of withstanding the 500V isolation from earth test and this must be taken into account during installation.
2. For processes with temperatures above 135 °C, the user must assess whether the SuperModule temperature class is suitable for such applications, because in this situation there is a risk of the SuperModule temperature being above T4.

	HART	SuperModule only	RTD (for 3051SFx)
Voltage U_i	30 V	7.14 V	30 V
Current I_i	300 mA	300 mA	2.31 mA
Power P_i	1 W	887 mW	17.32 mW
Capacitance C_i	12 nF	0.11 µ F	0
Inductance L_i	0	0	0

China

E3 China Flameproof and Dust Ignition-proof
Certificate: 3051SMV: GYJ14.1039X [Mfg USA, China, Singapore]
3051SFx: GYJ071086 [Mfg USA, China, Singapore]
Standards: 3051SMV: GB3836.1-2010, GB3836.2-2010, GB3836.20-2010
3051SFx: GB3836.1-2000, GB3836.2-2000, GB12476.1-2000
Markings: 3051SMV: Ex d IIC T6/T5 Ga/Gb
3051SFx: Ex d IIC T6/T5; Ex d IIB+H2T3~T5; DIP A21 T_A T3~T5

I3 China Intrinsic Safety
Certificate: 3051SMV: GYJ14.1040X [Mfg USA, China, Singapore]
3051SFx: GYJ11.1707X [Mfg USA, China, Singapore]
Standards: 3051SMV: GB3836.1-2010, GB3836.4-2010, GB3836.20-2010
3051SFx: GB3836.1/4-2010, GB3836.20-2010, GB12476.1-2000
Markings: 3051SMV: Ex ia IIC T4 Ga
3051SFx: Ex ia IIC T4 Ga, DIP A20 T_A105°C IP66

Japan

E4 Japan Flameproof
Certificate: TC19070, TC19071, TC19072, TC19073
Markings: Ex d IIC T6

Combinations

K1 Combination of E1, I1, N1, and ND

K2 Combination of E2 and I2

K5 Combination of E5 and I5

K6 Combination of E6 and I6

K7 Combination of E7, I7, and N7

KA Combination of E1, I1, E6, and I6

KB Combination of E5, I5, E6, and I6

KC Combination of E1, I1, E5, and I5

KD Combination of E1, I1, E5, I5, E6, and I6

Additional Certifications

SBS American Bureau of Shipping (ABS) Type Approval
Certificate: 00-HS145383-6-PDA
Intended Use: Measure gauge or absolute pressure of liquid, gas or vapor applications on ABS classed vessels, marine, and offshore installations.
ABS Rules: 2013 Steel Vessels Rules 1-1-4/7.7, 1-1-A3, 4-8-3/1.7, 4-8-3/1.11.1, 4-8-3/13.1

D3 Custody Transfer – Measurement Canada Accuracy Approval
Certificate: AG-0501, AV-2380C

Dimensional Drawings

Figure 1. Transmitter with Coplanar Sensor Module and Flange

PlantWeb housing	Junction box housing	Wireless housing
Front view	Front view	Front view
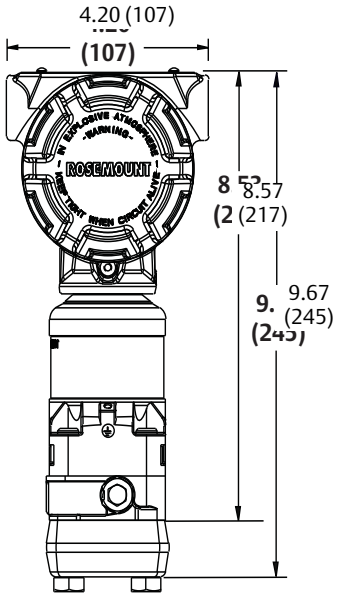	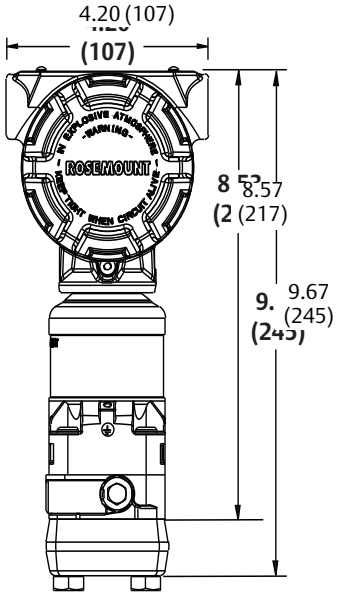	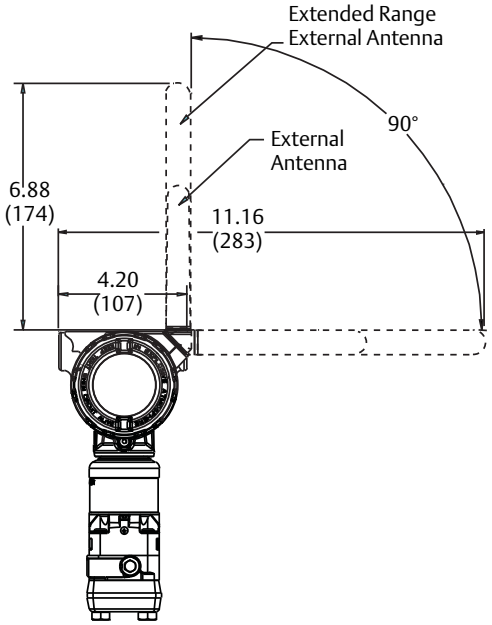
Side view	Side view	Side view
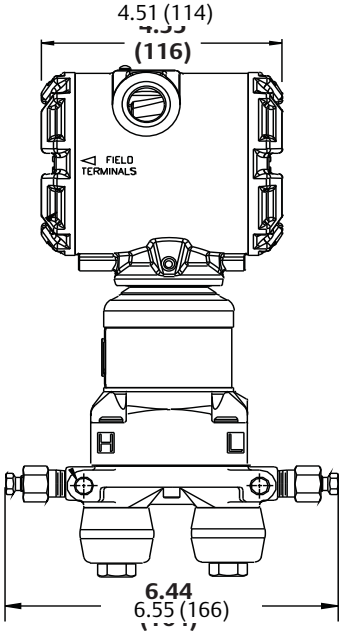	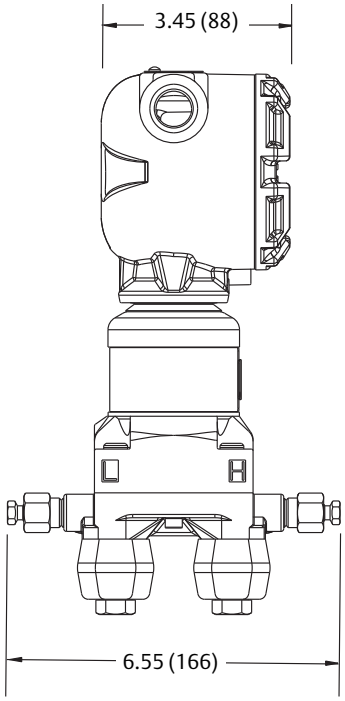	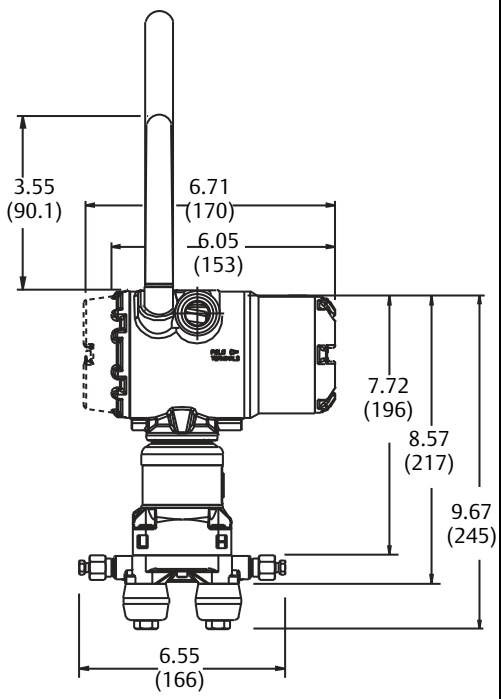

Dimensions are in inches (millimeters).

Figure 2. Transmitter with Coplanar Sensor Module and Traditional Flange

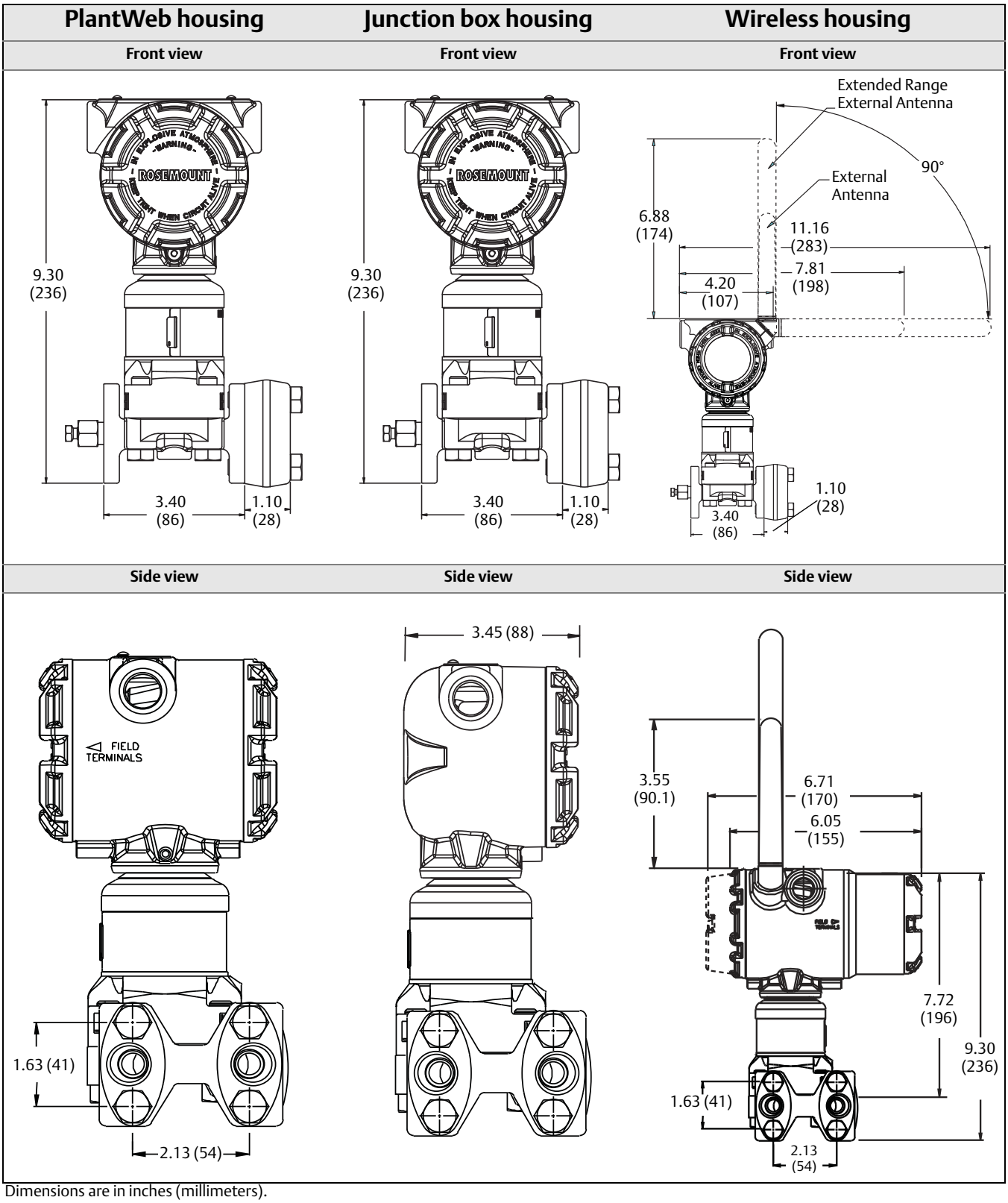

Dimensions are in inches (millimeters).

Figure 3. Transmitter with In-Line Sensor Module (for ranges 1A-4A, 1/2" NPT 316L SST process wetted connection); for detailed dimensions on other configurations, see Type I drawings at rosemount.com.

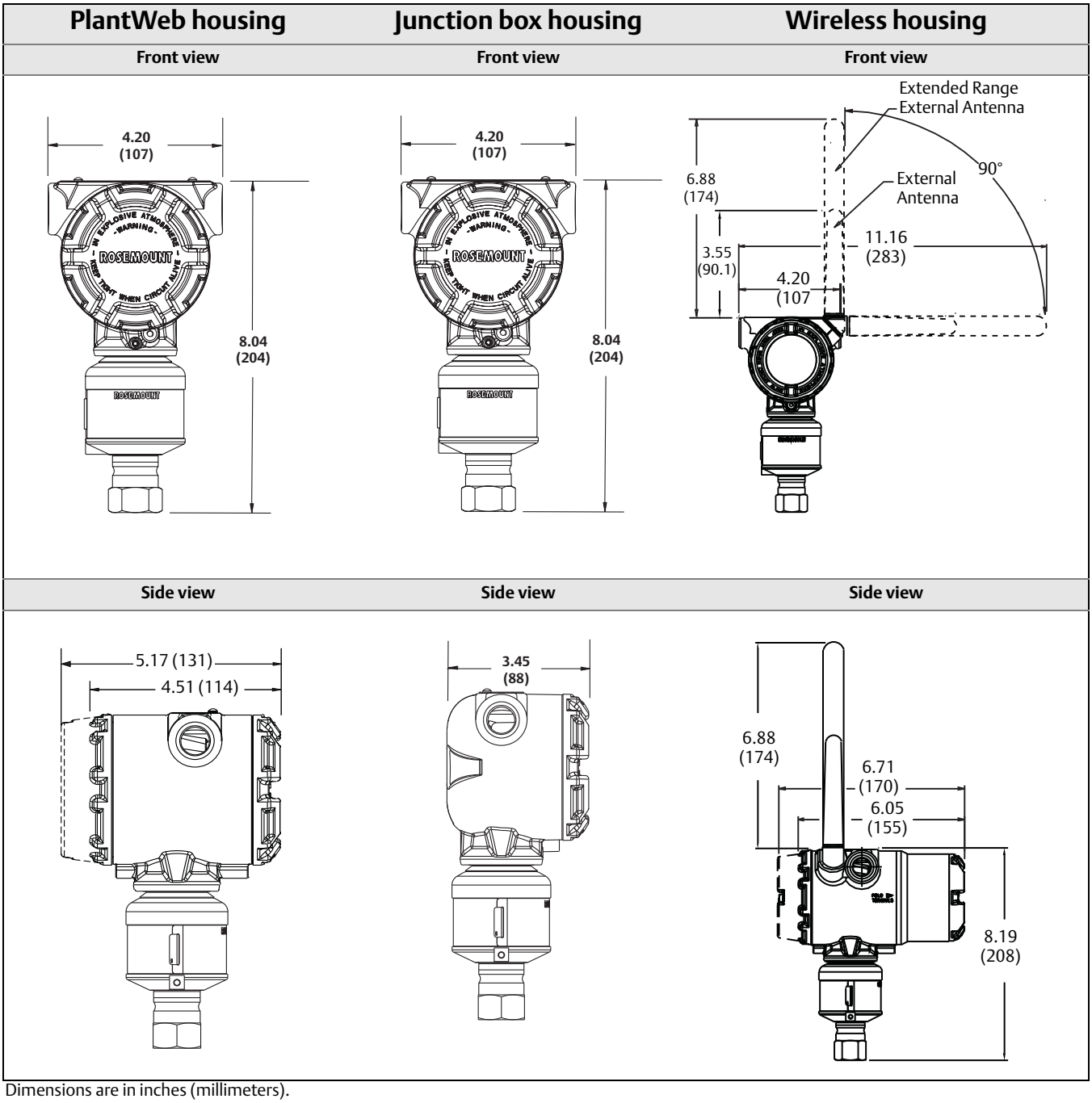

Dimensions are in inches (millimeters).

Figure 4. PlantWeb Housing, Junction Box Housing, and Quick Connect with In-Line SuperModule Platform

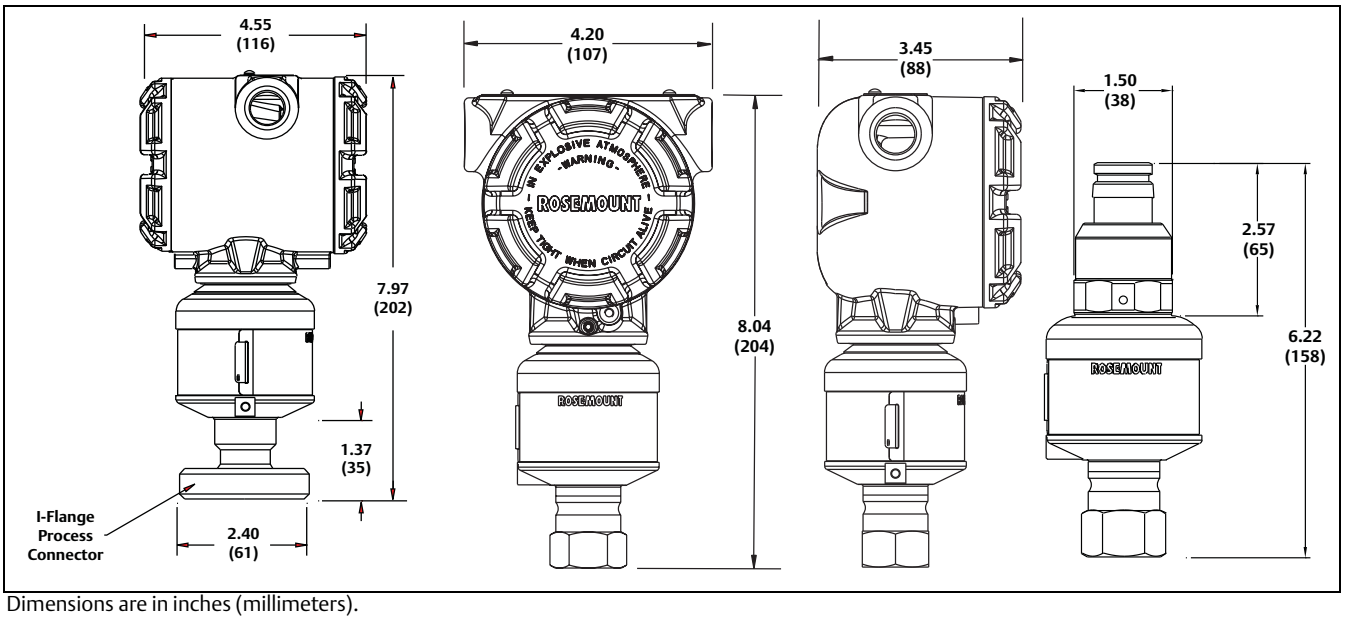

Dimensions are in inches (millimeters).

Figure 5. High Gain, Remote Mount Antenna (WN option)

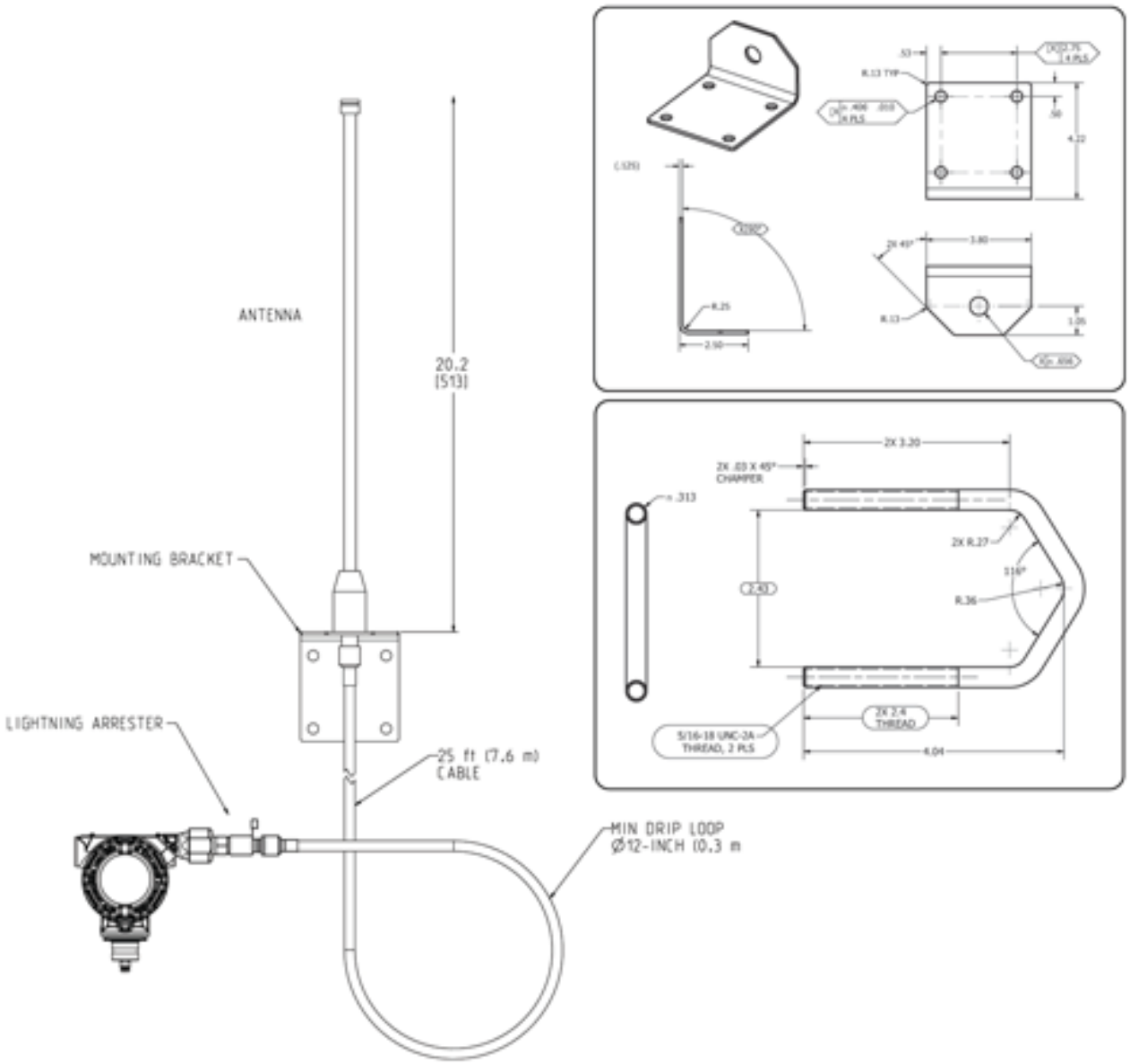

Dimensions are in inches (millimeters).

Figure 6. Coplanar Mounting Configurations (B4 Bracket)

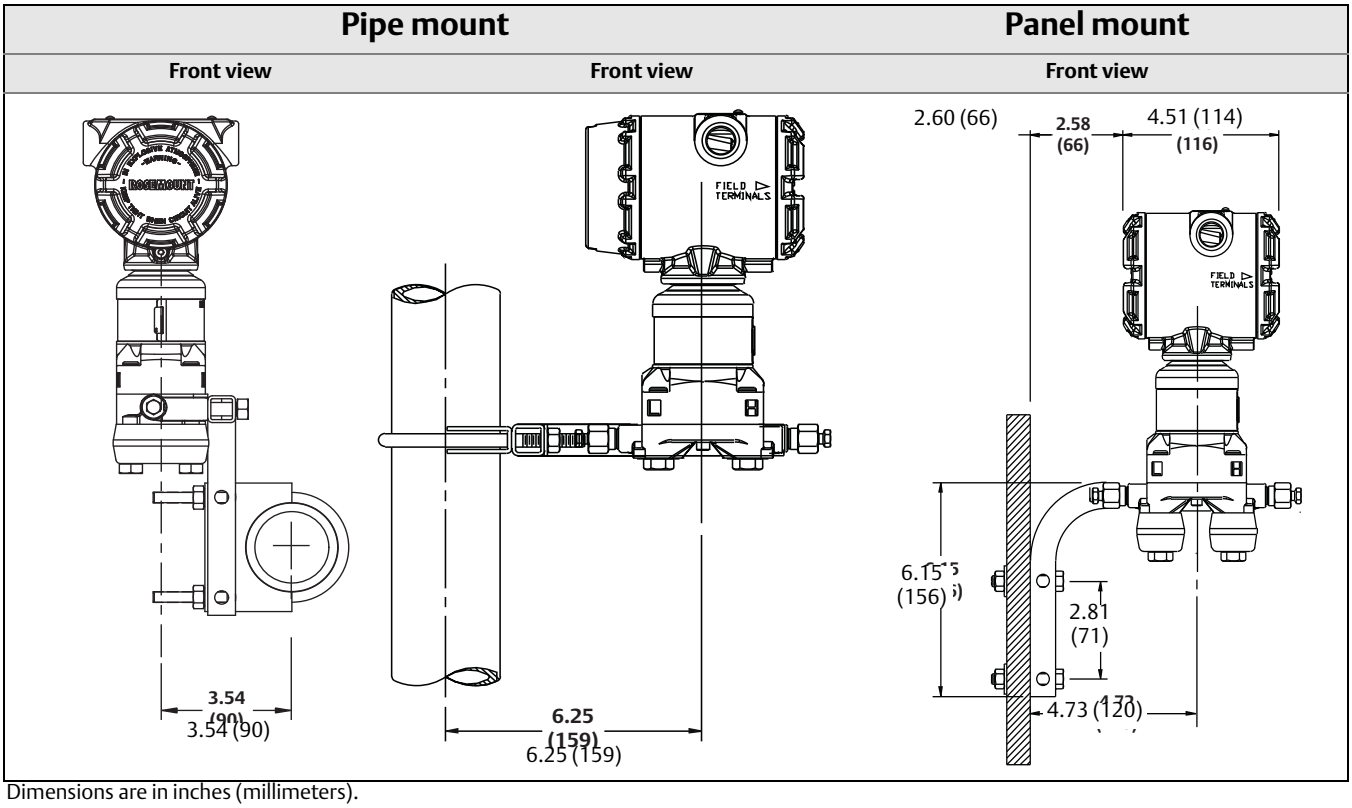

Dimensions are in inches (millimeters).

Figure 7. Traditional Mounting Configurations

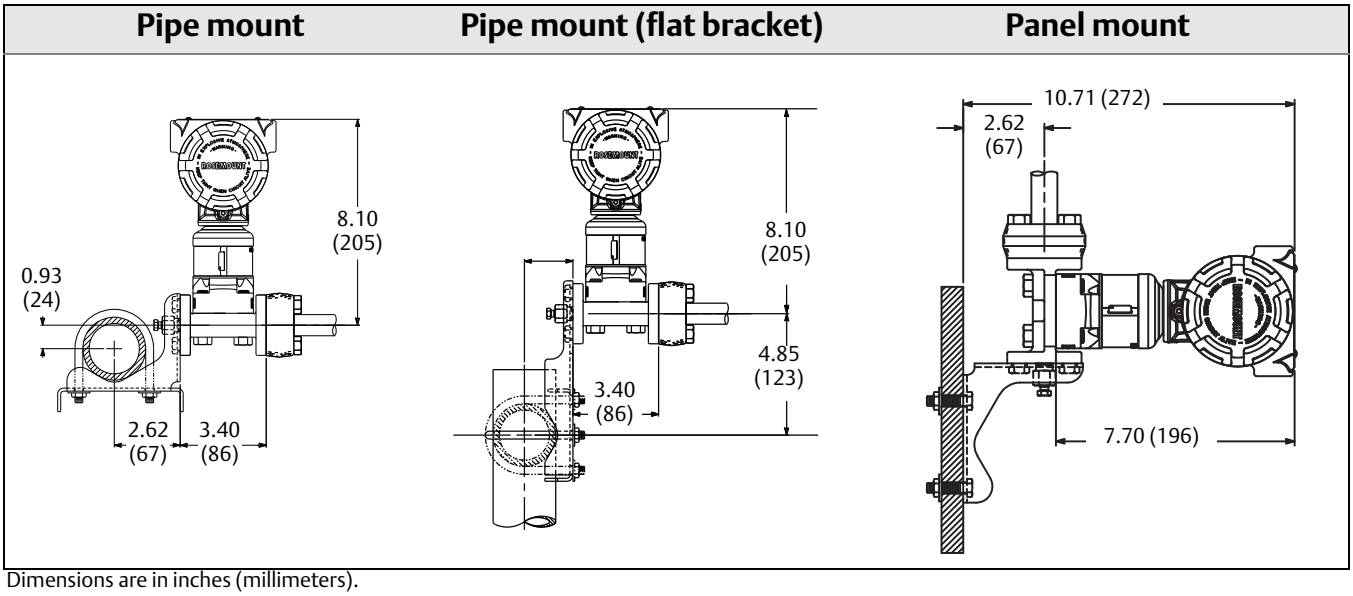

Dimensions are in inches (millimeters).

Figure 8. In-Line Mounting Configurations (B4 Bracket)

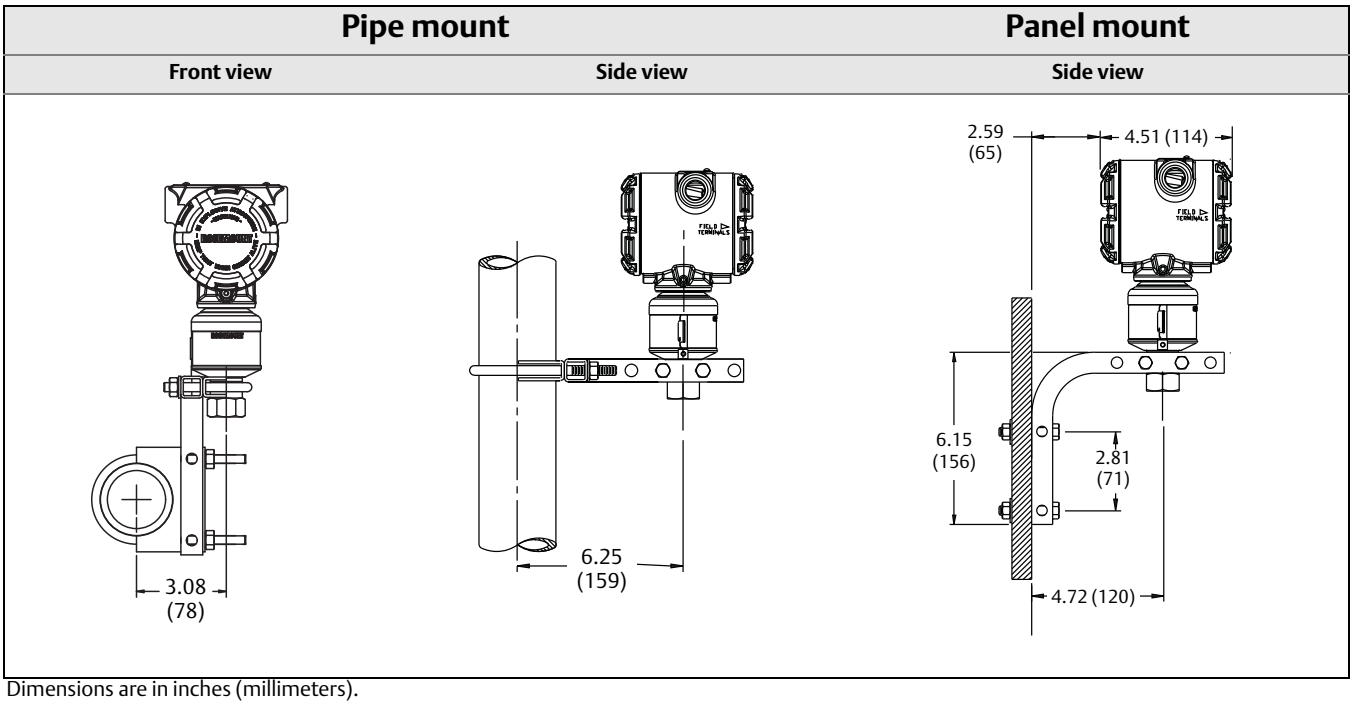

Dimensions are in inches (millimeters).

Figure 9. Remote Display Mounting Configurations (B4 Bracket)

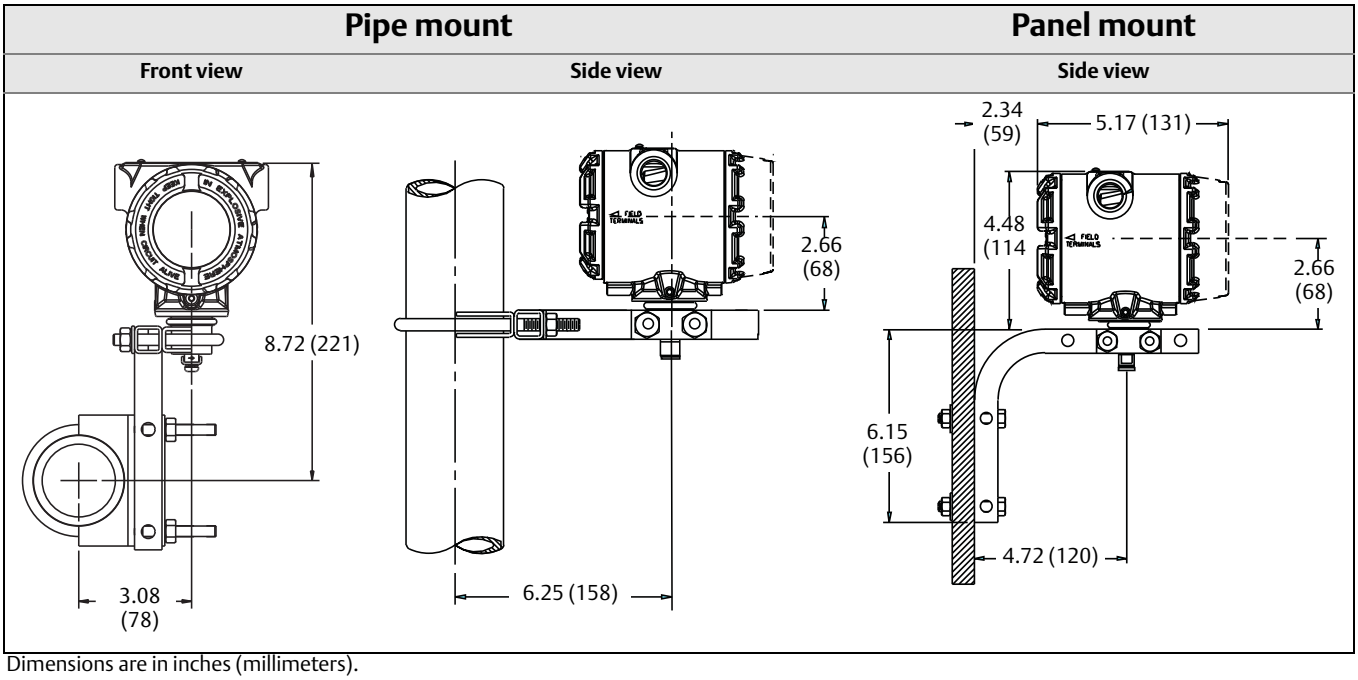

Dimensions are in inches (millimeters).

Figure 10. Rosemount 3051SFA Annubar Flowmeter

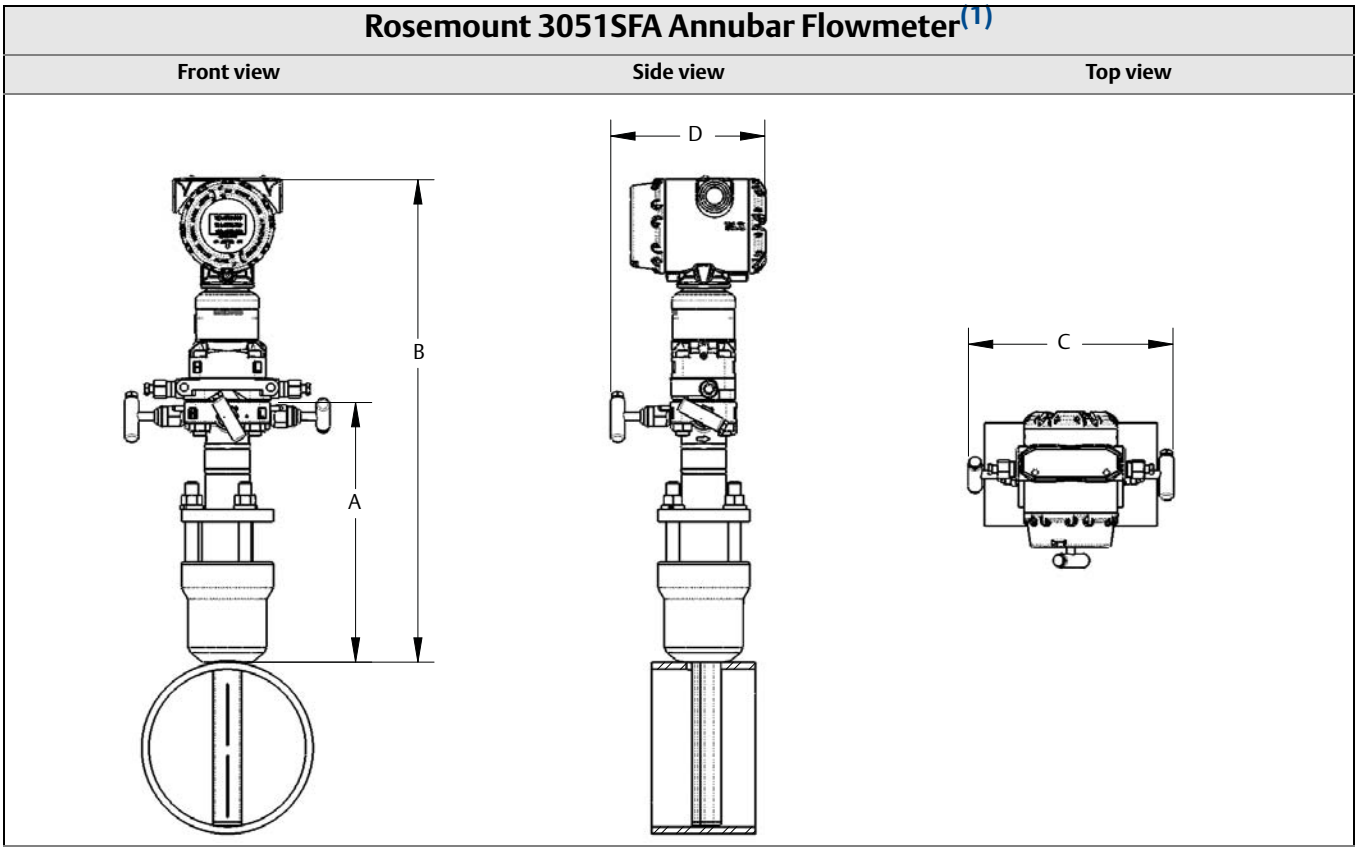

(1) The Pak-Lok Annubar model is available up to 600# ANSI [1440 psig at 100 °F (99 bar at 38 °C)].

Table 18. 3051CFA Annubar Flowmeter Dimensional Data

Sensor size	A (Max)	B (Max)	C (Max)	D (Max)
1	8.50(215.9)	17.10 (434.3)	8.66 (220.0)	7.00 (177.8)
2	11.00(279.4)	19.60 (497.8)	8.66 (220.0)	7.00 (177.8)
3	12.00 (304.8)	20.60 (523.2)	8.66 (220.0)	7.00 (177.8)

Dimensions are in inches (millimeters)

Figure 11. Rosemount 3051SFC Compact Orifice Flowmeter

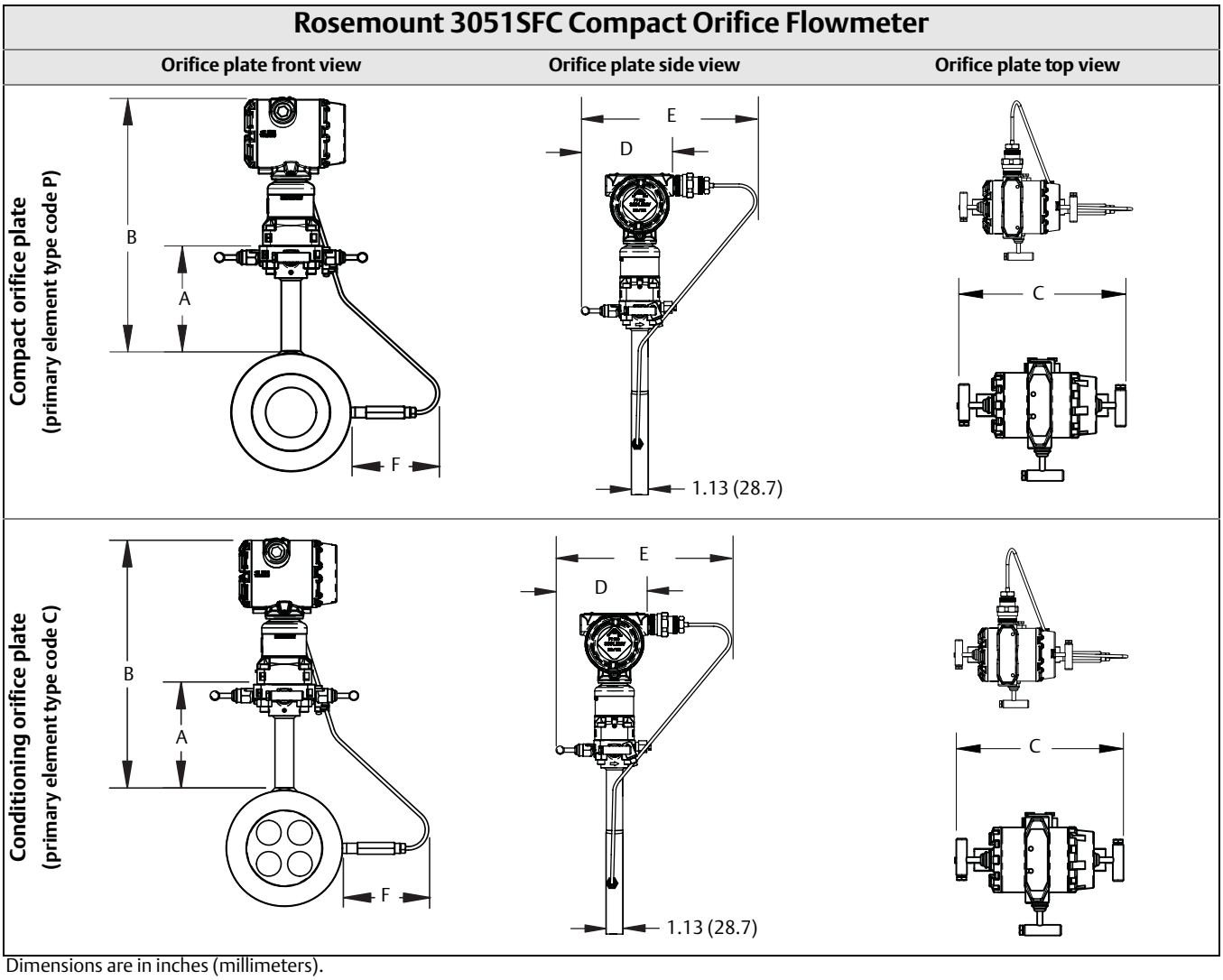

Dimensions are in inches (millimeters).

Table 19. Dimensional Drawings

Primary element type	A	B	Transmitter height	C	D	E	F
Type P and C	5.62 (143)	Transmitter Height + A	7.70 (196)	7.75 (197) - closed 8.25 (210) - open	6.00 (152) - closed 6.25 (159) - open	10.2 (257.8) - closed 10.4 (264.2) - open	Max of 7.2 (184)

Dimensions are in inches (millimeters).

Figure 12. Rosemount 3051SFP Integral Orifice Flowmeter

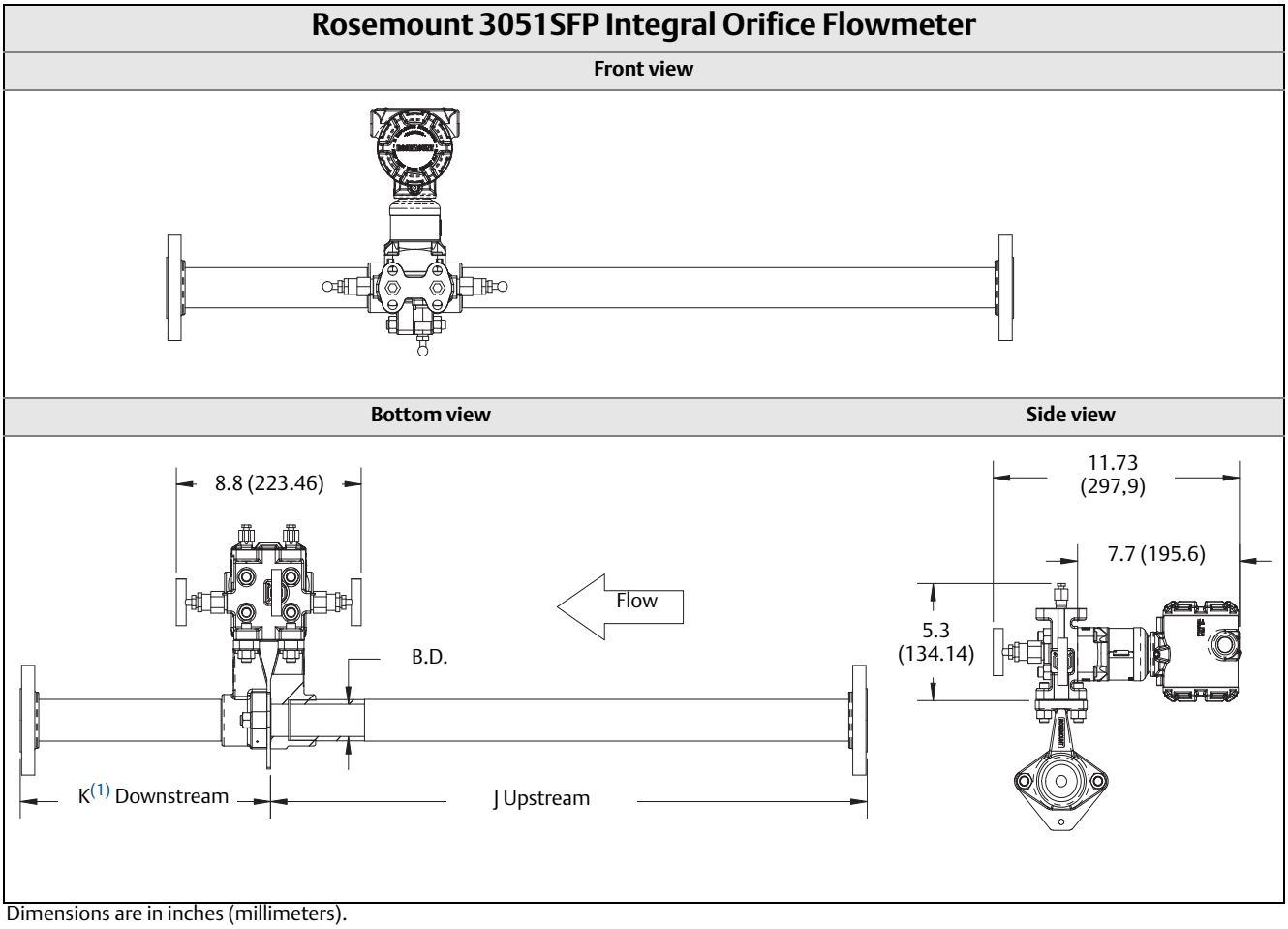

Dimensions are in inches (millimeters).

	Line size		
Dimension	**1/2-in. (15 mm)**	**1-in. (25 mm)**	**1 1/2-in. (40 mm)**
J (Beveled/Threaded pipe ends)	12.54 (318.4)	20.24 (514.0)	28.44 (722.4)
J (RF slip-on, RTJ slip-on, RF-DIN slip on)	12.62 (320.4)	20.32 (516.0)	28.52 (724.4)
J (RF 150#, weld neck)	14.37 (364.9)	22.37 (568.1)	30.82 (782.9)
J (RF 300#, weld neck)	14.56 (369.8)	22.63 (574.7)	31.06 (789.0)
J (RF 600#, weld neck)	14.81 (376.0)	22.88 (581.0)	31.38 (797.1)
K (Beveled/Threaded pipe ends)	5.74 (145.7)	8.75 (222.2)	11.91 (302.6)
K (RF slip-on, RTJ slip-on, RF-DIN slip on)(1)	5.82 (147.8)	8.83 (224.2)	11.99 (304.6)
K (RF 150#, weld neck)	7.57 (192.3)	10.88 (276.3)	14.29 (363.1)
K (RF 300#, weld neck)	7.76 (197.1)	11.14 (282.9)	14.53 (369.2)

(1) Downstream length shown here includes plate thickness of 0.162-in. (4.11 mm).

Figure 13. Rosemount 3051S Scalable Level Transmitter with FF Seal

Rosemount 3051S Scalable Level Transmitter with FF[1][2] - Coplanar Style

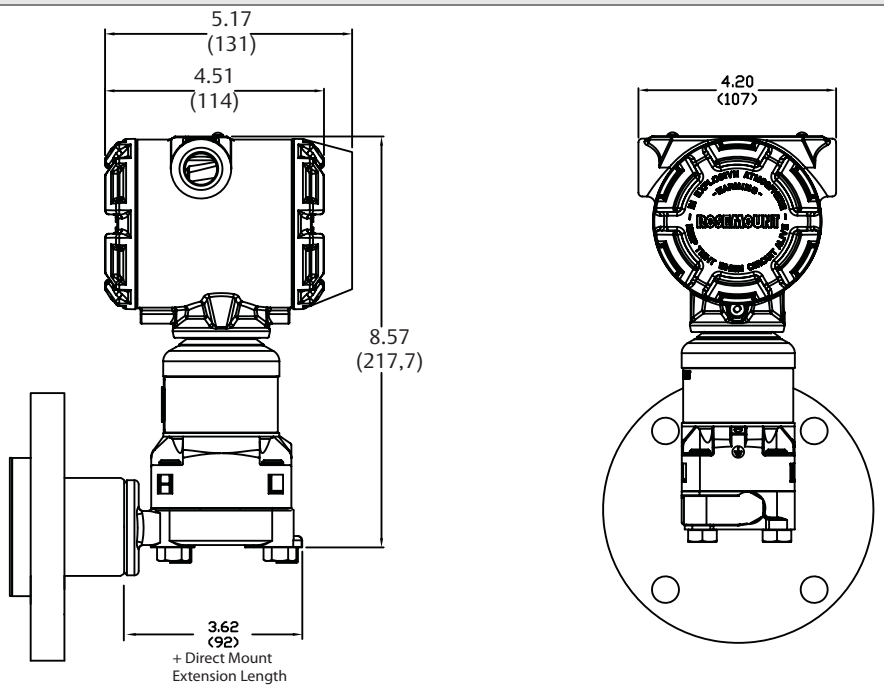

Rosemount 3051S Scalable Level Transmitter with FF[1][2] - In-Line Style

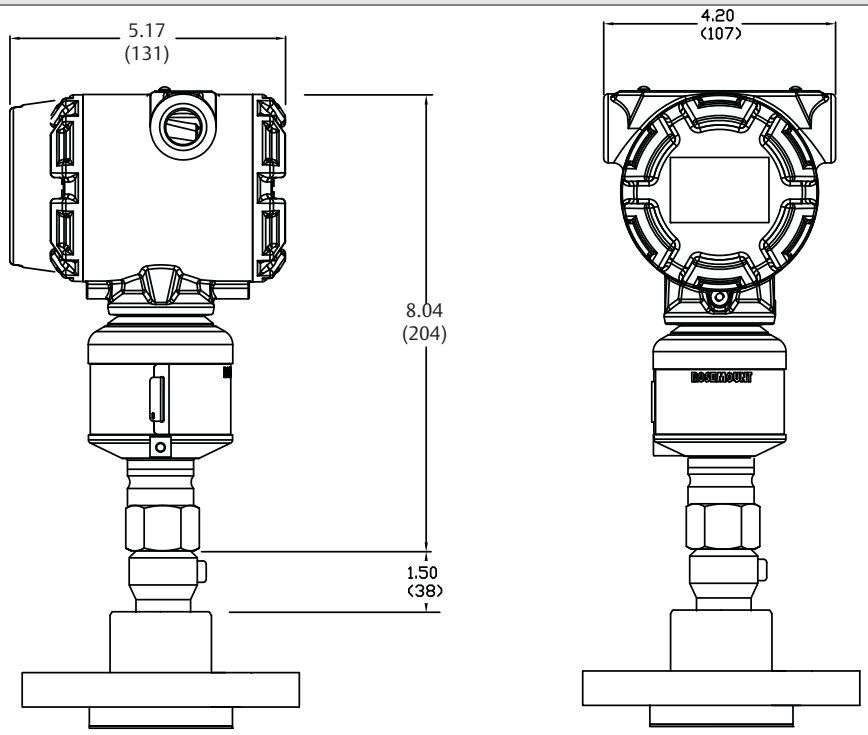

Dimensions are in inches (millimeters).

(1) FF (FFW) seal dimensions and pressure ratings can be found in the Rosemount DP Level Transmitters and 1199 Remote Seals Product Data Sheet, (00813-0100-4016).

(2) Lower housing (flushing ring) is available with FFW style flange.

Figure 14. Rosemount 3051S Scalable Level Transmitter with EF Seal

Rosemount 3051S Scalable Level Transmitter with EF[(1)]- Coplanar Style

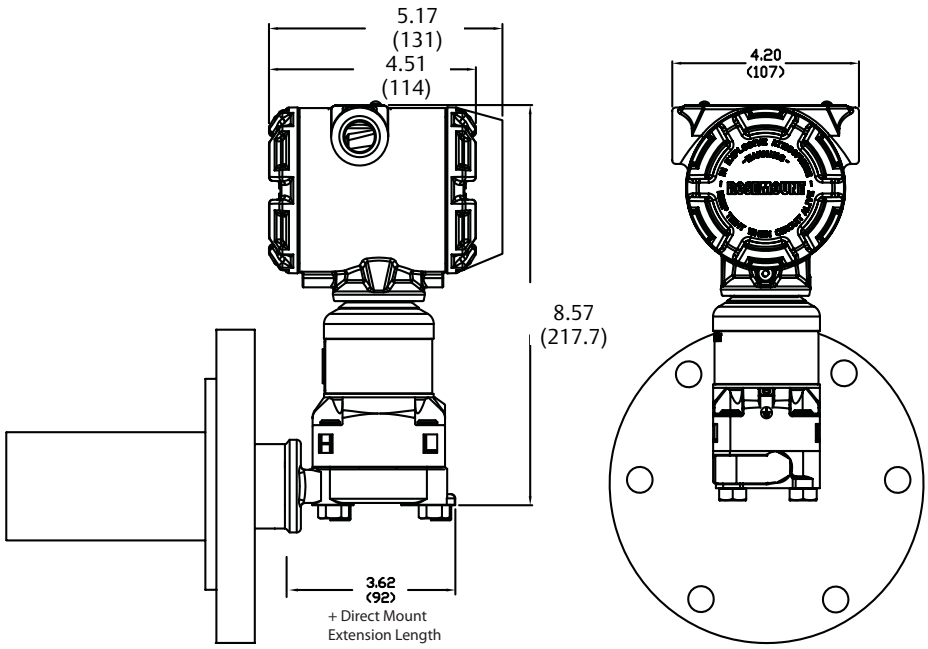

Rosemount 3051S Scalable Level Transmitter with EF[(1)] - In-Line Style

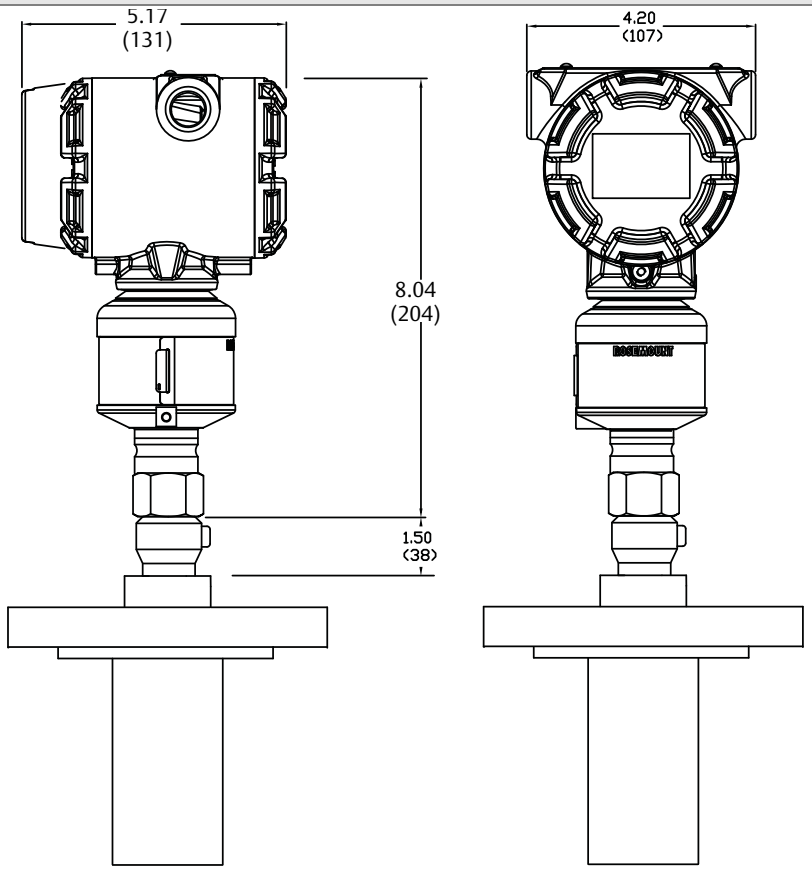

Dimensions are in inches (millimeters).

(1) EF (EFW) seal dimensions and pressure ratings can be found in the Rosemount DP Level Transmitters and 1199 Remote Seals Product Data Sheet, (00813-0100-4016).

Figure 15. Rosemount 3051S Scalable Level Transmitter with RF Seal

Rosemount 3051S Scalable Level Transmitter with RF[(1)]- Coplanar Style

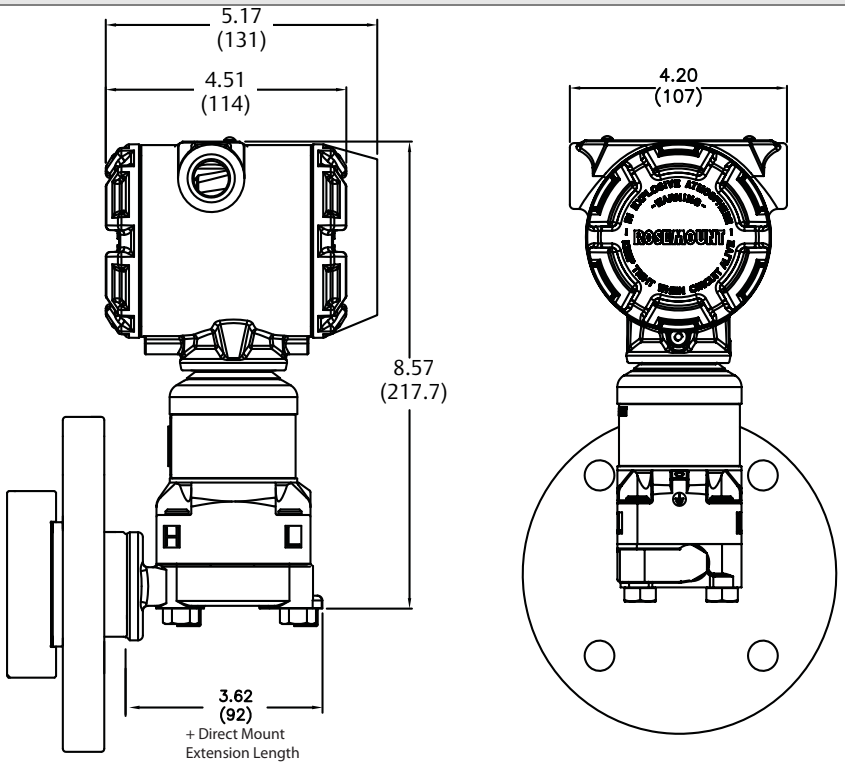

Rosemount 3051S Scalable Level Transmitter with RF[(1)] - In-Line Style

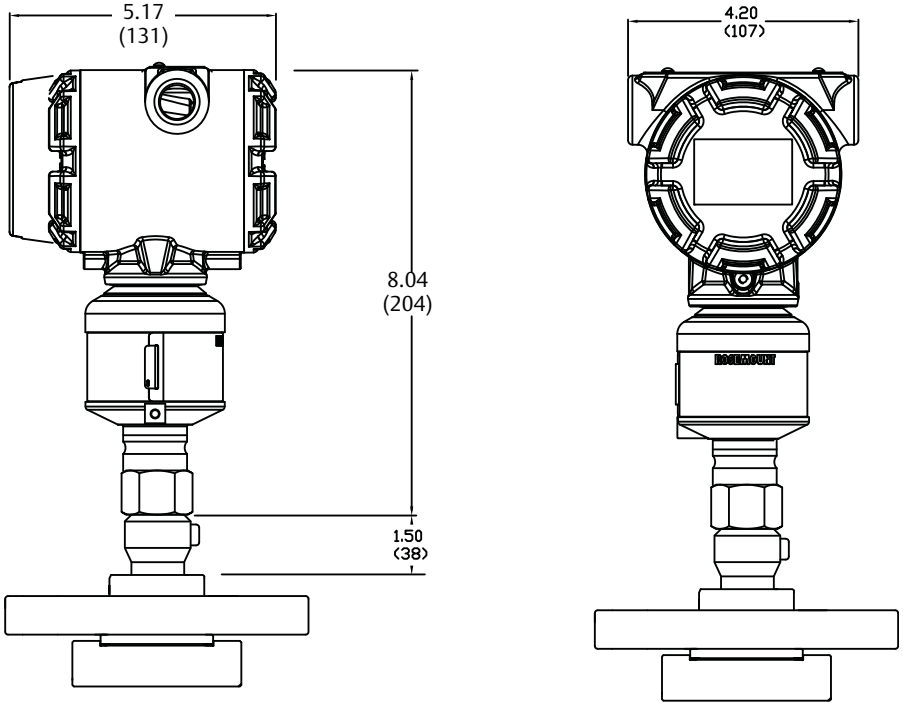

Dimensions are in inches (millimeters).

(1) RF (RFW) seal dimensions and pressure ratings can be found in the Rosemount DP Level Transmitters and 1199 Remote Seals Product Data Sheet, (00813-0100-4016).

Figure 16. Rosemount 3051S Scalable Level Transmitter with RT Seal

Rosemount 3051S Scalable Level Transmitter with RT[(1)]- Coplanar Style

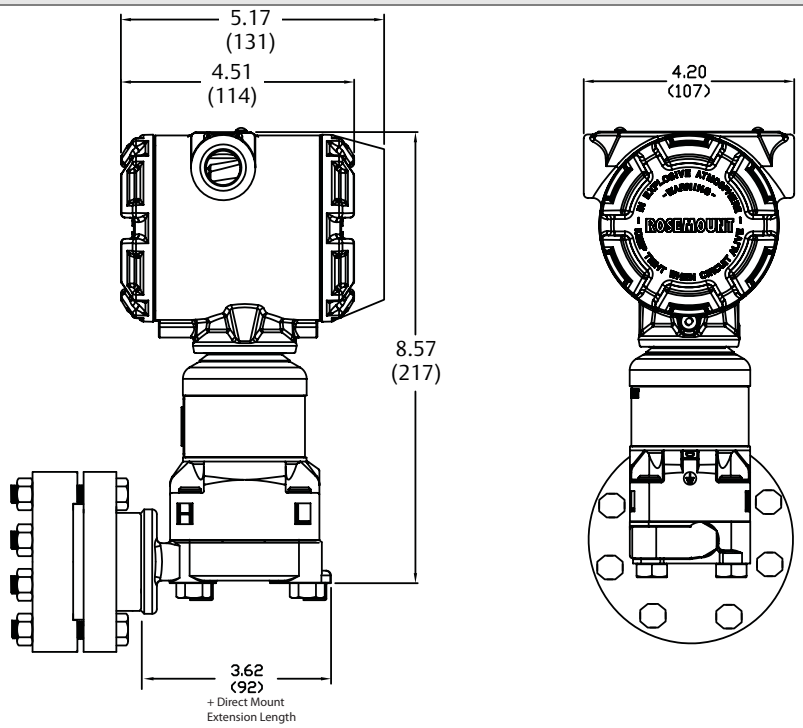

Rosemount 3051S Scalable Level Transmitter with RT[(1)] - In-Line Style

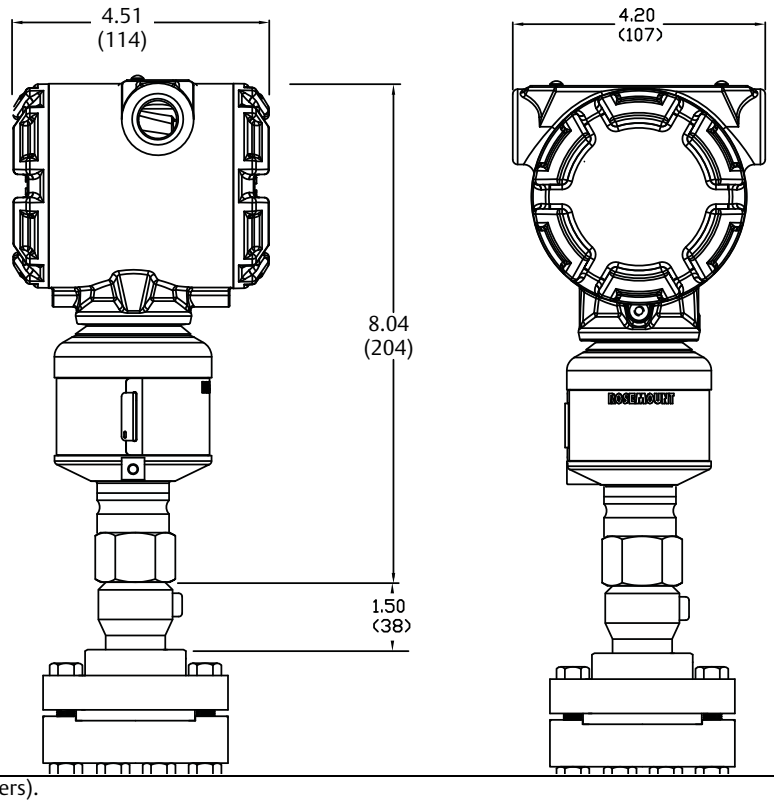

Dimensions are in inches (millimeters).

(1) RT (RTW) seal dimensions can be found in the Rosemount DP Level Transmitters and 1199 Remote Seals Product Data Sheet, (00813-0100-4016).

Figure 17. Rosemount 3051S Scalable Level Transmitter with SS Seal

Rosemount 3051S Scalable Level Transmitter with SS[(1)]- Coplanar Style

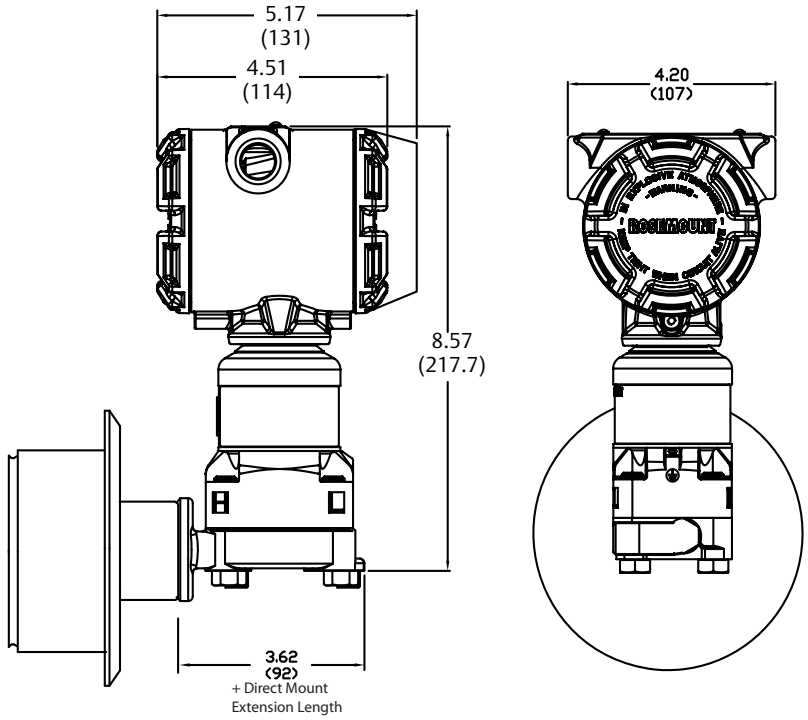

Rosemount 3051S Scalable Level Transmitter with SS[(1)] - In-Line Style

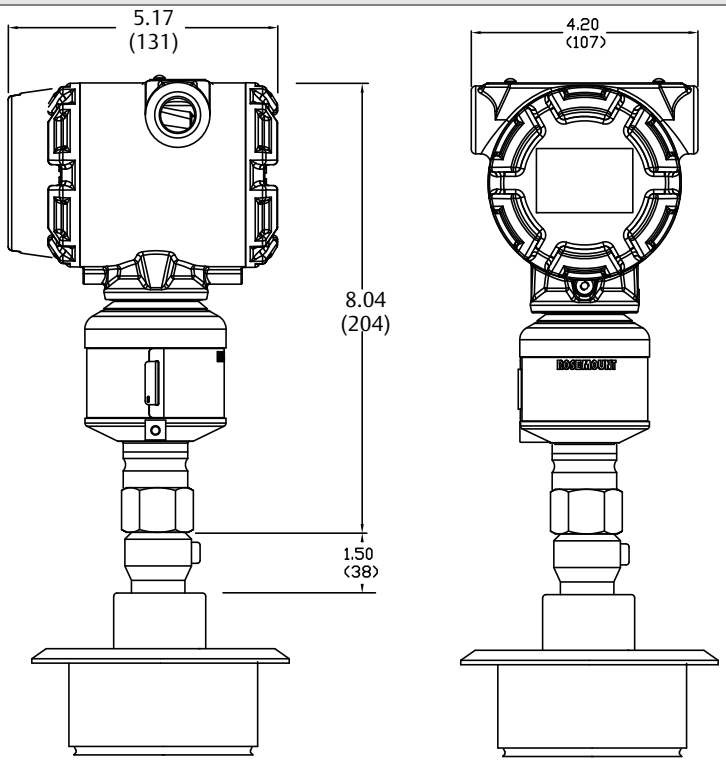

Dimensions are in inches (millimeters).

(1) SS (SSW) seal dimensions and pressure ratings can be found in the Rosemount DP Level Transmitters and 1199 Remote Seals Product Data Sheet, (00813-0100-4016).

Figure 18. Rosemount 3051S Scalable Level Transmitter with SC Seal

Rosemount 3051S Scalable Level Transmitter with SC[(1)]- Coplanar Style

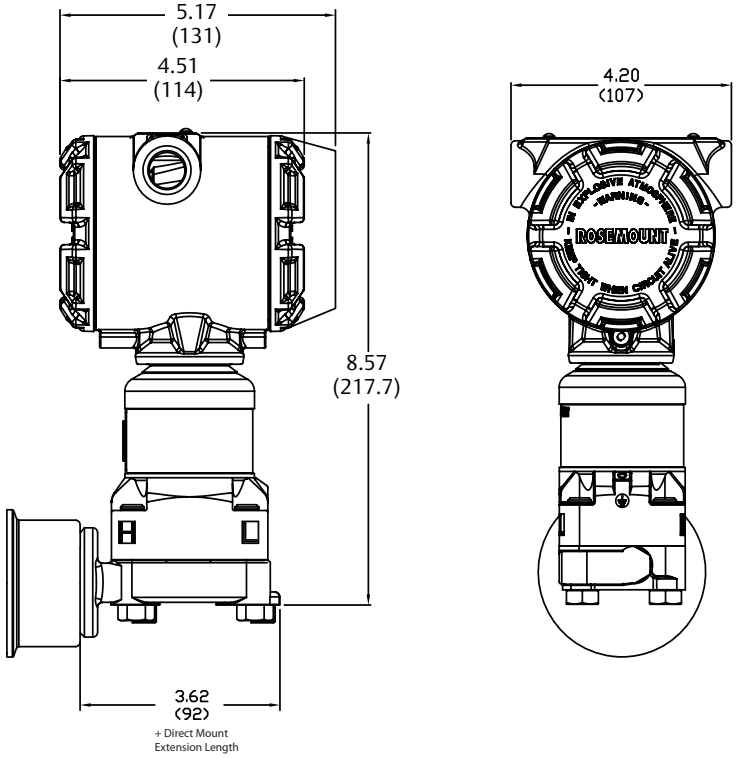

Rosemount 3051S Scalable Level Transmitter with SC[(1)] - In-Line Style

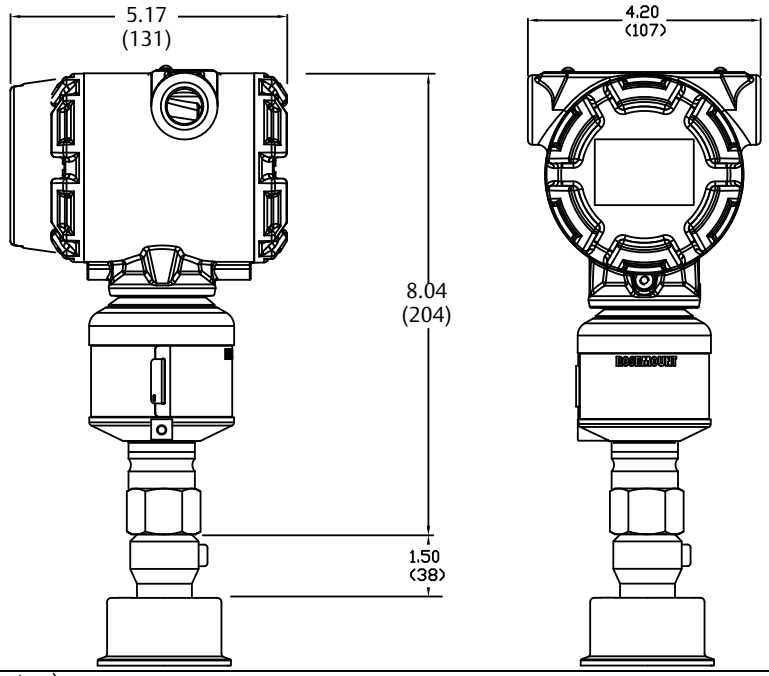

Dimensions are in inches (millimeters).

(1) SC (SCW) seal dimensions and pressure ratings can be found in the Rosemount DP Level Transmitters and 1199 Remote Seals Product Data Sheet, (00813-0100-4016).

Accessories

Rosemount Engineering Assistant (EA) software packages

The Rosemount Engineering Assistant software supports flow configuration for the 3051S MultiVariable and 3051S FOUNDATION fieldbus Fully Compensated Mass Flow Block (H01 option). The package is available with or without modem and connecting cables. All configurations are packaged separately. For best performance of the EA Software, the following computer hardware and software is recommended:

Note
Engineering Assistant version 6.1 or later requires the use of Microsoft®.NET Framework version 2.0 or later. If.NET version 2.0 is not currently installed, the software will be automatically installed during the Engineering Assistant installation. Microsoft.NET version 2.0 requires an additional 200 MB of disk space.

Minimum system requirements for Engineering Assistant 5.5.1 for the 3051S FOUNDATION fieldbus with fully compensated mass flow block (H01 option)

- PC Compatible Pentium 400 or above
- Operating System: Windows XP Professional (32-bit) or Windows Vista (32-bit)
- 256 MB RAM
- 535 MB free hard disk space
- RS232 serial port or USB port (for use with HART modem)
- CD-ROM

Minimum system requirements for Engineering Assistant 6 for the 3051SMV

- Pentium-grade Processor: 500MHz or faster
- Operating System: Microsoft Windows 2000 (32-bit), Windows XP Professional (32-bit), or Windows 7
- 256 MB RAM
- 100 MB of available hard disk space
- RS232 serial port or USB port (for use with HART modem)
- CD-ROM

Engineering Assistant software packages

Code	Product description
EA	Engineering Assistant Software Program
Code	**Software media**
2	EA Rev. 5 (Compatible with 3095, 3051S FOUNDATION fieldbus, and 333)
3	EA Rev. 6 (Compatible with 3051SMV only)
Code	**Language**
E	English
Code	**Modem and connecting cables**
0	None
H	Serial Port HART Modem and Cables
B	USB Port HART Modem and Cables
C	FOUNDATION fieldbus PCM-CIA Interface Card and Cables
Code	**License**
N1	Single PC license
N2	Site license
Typical model number: EA 2 E 0 N1	

Accessories

Item description	Part number
Serial Port HART Modem and Cables Only	03095-5105-0001
USB Port HART Modem and Cables Only(1)	03095-5105-0002
FOUNDATION fieldbus PCM-CIA Interface Card and Cables Only	03095-5108-0001
Long-life Power Module for Wireless option	701PBKKF

(1) Supported by Snap-On EA with AMS Device Manager version 6.2 or higher.

Emerson Process Management
Rosemount Inc.
8200 Market Boulevard
Chanhassen, MN 55317 USA
T (U.S.) 1-800-999-9307
T (International) (952) 906-8888
F (952) 906 8889
www.rosemount.com

Emerson Process Management
Latin America
1300 Concord Terrace, Suite 400
Sunrise Florida 33323 USA
Tel + 1 954 846 5030

Emerson Process Management Asia
Pacific Pte Ltd
1 Pandan Crescent
Singapore 128461
Tel +65 6777 8211
Fax +65 6777 0947
Service Support Hotline : +65 6770 8711
Email : Enquiries@AP.EmersonProcess.com

Emerson Process Management
Blegistrasse 23
P.O. Box 1046
CH 6341 Baar
Switzerland
Tel +41 (0) 41 768 6111
Fax +41 (0) 41 768 6300

Emerson FZE
P.O. Box 17033
Jebel Ali Free Zone
Dubai UAE
Tel +971 4 811 8100
Fax +971 4 886 5465

Standard Terms and Conditions of Sale can be found at www.rosemount.com\terms_of_sale
The Emerson logo is a trade mark and service mark of Emerson Electric Co.
Rosemount and the Rosemount logotype are registered trademarks of Rosemount Inc.
PlantWeb is a registered trademark of one of the Emerson Process Management group of companies.
HART and WirelessHART are registered trademarks of the HART Communication Foundation
All other marks are the property of their respective owners.
© 2014 Rosemount Inc. All rights reserved.

00813-0100-4801 Rev SB, 7/14

ROSEMOUNT

EMERSON.
Process Management

Rosemount 3051S Series Pressure Transmitter with HART® Protocol

Rosemount 3051SF Series Flowmeter Transmitter with HART® Protocol

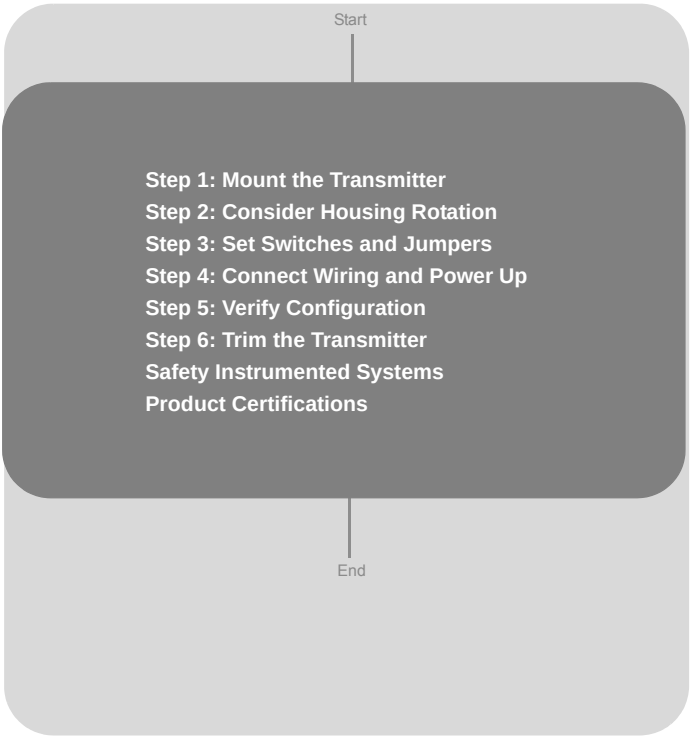

ROSEMOUNT
www.rosemount.com

EMERSON
Process Management

© 2010 Rosemount Inc. All rights reserved. All marks property of owner.
Rosemount and the Rosemount logotype are registered trademarks of Rosemount Inc.

Rosemount Inc.
8200 Market Boulevard
Chanhassen, MN USA 55317
T (US) (800) 999-9307
T (Intnl) (952) 906-8888
F (952) 949-7001

Emerson Process Management Asia Pacific Private Limited
1 Pandan Crescent
Singapore 128461
T (65) 6777 8211
F (65) 6777 0947/65 6777 0743

Emerson Process Management GmbH & Co. OHG
Argelsrieder Feld 3
82234 Wessling
Germany
T 49 (8153) 9390, F49 (8153) 939172

Beijing Rosemount Far East Instrument Co., Limited
No. 6 North Street, Hepingli, Dong Cheng District
Beijing 100013, China
T (86) (10) 6428 2233
F (86) (10) 6422 8586

⚠ IMPORTANT NOTICE

This installation guide provides basic guidelines for Rosemount 3051S transmitters (reference manual document number 00809-0100-4801). It also provides the basic electronics guidelines for the 3051SFA (reference manual document number 00809-0100-4809), 3051SFC (reference manual document number 00809-0100-4810), and 3051SFP (reference manual document number 00809-0100-4686). It does not provide instructions for diagnostics, maintenance, service, or troubleshooting. This document is also available electronically on www.rosemount.com.

⚠ WARNING

Explosions could result in death or serious injury:

Installation of this transmitter in an explosive environment must be in accordance with the appropriate local, national, and international standards, codes, and practices. Please review the approvals section of the 3051S reference manual for any restrictions associated with a safe installation.

- Before connecting a Field Communicator in an explosive atmosphere, ensure the instruments in the loop are installed in accordance with intrinsically safe or non-incendive field wiring practices.
- In an Explosion-Proof/Flameproof installation, do not remove the transmitter covers when power is applied to the unit.

Process leaks may cause harm or result in death.

- Install and tighten process connectors before applying pressure.

Electrical shock can result in death or serious injury.

- Avoid contact with the leads and terminals. High voltage that may be present on leads can cause electrical shock.

Conduit/Cable Entries

- Unless marked, the conduit/cable entries in the transmitter housing use a $^{1}/_{2}$-14 NPT thread form. Only use plugs, adapters, glands, or conduit with a compatible thread form when closing these entries.

STEP 1: MOUNT THE TRANSMITTER

Liquid Flow Applications

1. Place taps to the side of the line.
2. Mount beside or below the taps.
3. Mount the transmitter so that the drain/vent valves are oriented upward.

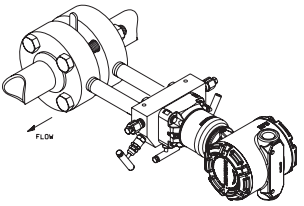

Gas Flow Applications

1. Place taps in the top or side of the line.
2. Mount beside or above the taps.

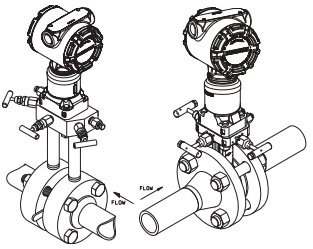

Steam Flow Applications

1. Place taps to the side of the line.
2. Mount beside or below the taps.
3. Fill impulse lines with water.

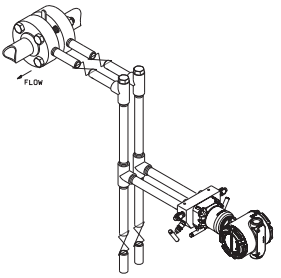

STEP 1 CONTINUED...

Panel Mount **Pipe Mount**

Coplanar™ Flange

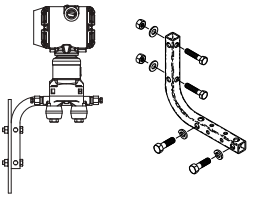
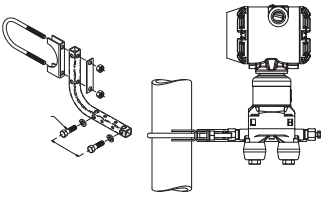

Traditional Flange

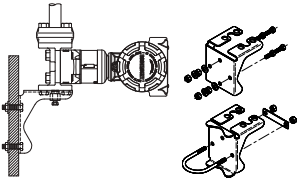
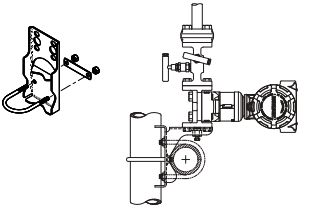

In-line

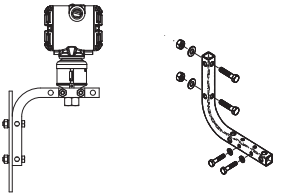
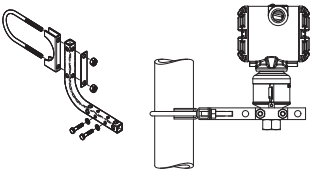

Housings

PlantWeb™ **Junction Box** **Remote Mount Display**





STEP 1 CONTINUED...

Bolting Considerations

If the transmitter installation requires assembly of the process flanges, manifolds, or flange adapters, follow these assembly guidelines to ensure a tight seal for optimal performance characteristics of the transmitters. Use only bolts supplied with the transmitter or sold by Emerson as spare parts. Figure 1 illustrates common transmitter assemblies with the bolt length required for proper transmitter assembly.

Figure 1. Common Transmitter Assemblies

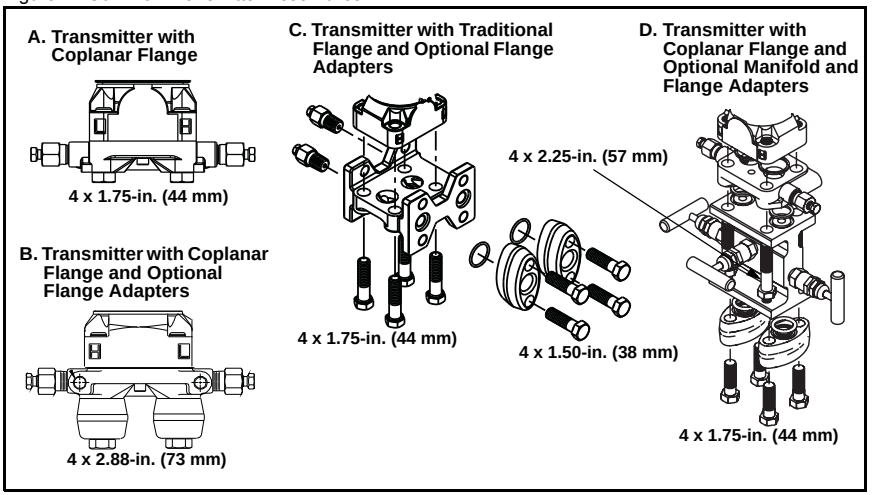

Bolts are typically carbon steel or stainless steel. Confirm the material by viewing the markings on the head of the bolt and referencing Figure 2. If bolt material is not shown in Figure 2, contact the local Emerson Process Management representative for more information.

Use the following bolt installation procedure:

1. Carbon steel bolts do not require lubrication and the stainless steel bolts are coated with a lubricant to ease installation. However, no additional lubricant should be applied when installing either type of bolt.
2. Finger-tighten the bolts.
3. Torque the bolts to the initial torque value using a crossing pattern. See Figure 2 for initial torque value.
4. Torque the bolts to the final torque value using the same crossing pattern. See Figure 2 for final torque value.
5. Verify that the flange bolts are protruding through the isolator plate before applying pressure.

STEP 1 CONTINUED...

Figure 2. Torque values for the flange and flange adapter bolts

Bolt Material	Head Markings	Initial Torque	Final Torque
Carbon Steel (CS)	B7M	300 in.-lbs.	650 in.-lbs.
Stainless Steel (SST)	316 / B8M / 316 / 316 ® / STM 316 / SW 316	150 in.-lbs.	300 in.-lbs.

O-rings with Flange Adapters

⚠ WARNING

Failure to install proper flange adapter O-rings may cause process leaks, which can result in death or serious injury. The two flange adapters are distinguished by unique O-ring grooves. Only use the O-ring that is designed for its specific flange adapter, as shown below.

Rosemount 3051S / 3051 / 2051 / 3095

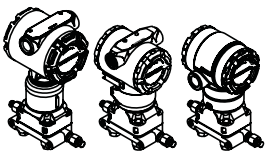

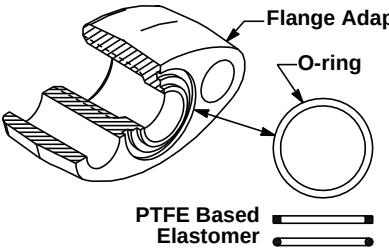

Rosemount 1151



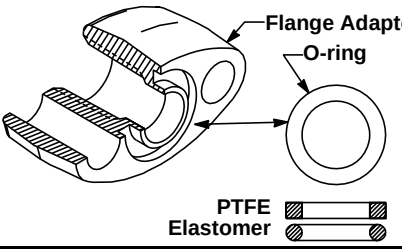

⚠ Whenever the flanges or adapters are removed, visually inspect the o-rings. Replace them if there are any signs of damage, such as nicks or cuts. If you replace the o-rings, re-torque the flange bolts and alignment screws after installation to compensate for seating of the PTFE o-ring.

STEP 1 CONTINUED...

Inline Gage Transmitter Orientation

The low side pressure port (atmospheric reference) on the inline gage transmitter is located under the sensor module neck label. (See Figure 3.)

Keep the vent path free of any obstruction, including but not limited to paint, dust, and lubrication by mounting the transmitter so that any contaminants can drain away.

Figure 3. Inline Gage Transmitter

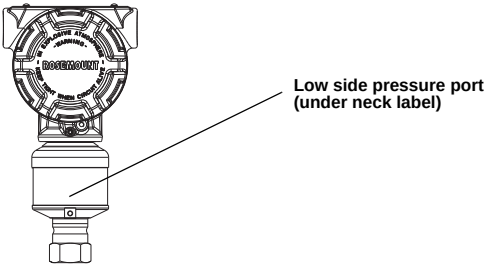

STEP 2: CONSIDER HOUSING ROTATION

To improve field access to wiring or to better view the optional LCD display:

1. Loosen the housing rotation set screw.
2. First rotate the housing clockwise to the desired location. If the desired location cannot be achieved due to thread limit, rotate the housing counter clockwise to the desired location (up to 360° from thread limit).
3. Retighten the housing rotation set screw.

Figure 4. Transmitter Housing Set Screw

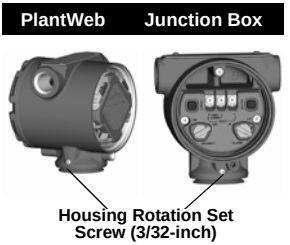

STEP 3: SET SWITCHES AND JUMPERS

If alarm and security adjustment option is not installed, the transmitter will operate normally with the default alarm condition alarm *high* and the security *off*.

Figure 5. Transmitter Switch and Jumper Configuration

PlantWeb

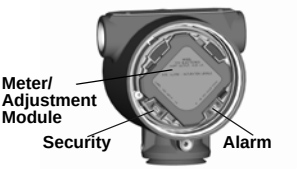

Slide the security and alarm switches into the preferred position by using a small screwdriver. (An LCD display or an adjustment module must be in place to activate the switches.)

Junction Box



Pull the jumpers out and rotate 90° into desired position to set the security and alarm.

STEP 4: CONNECT WIRING AND POWER UP

Use the following steps to wire the transmitter:

1. Remove the housing cover labeled “Field Terminals.”
2. Connect the positive lead to the “+” terminal, and the negative lead to the “–” terminal.

NOTE

Do not connect the power across the test terminals. Power could damage the test diode in the test connection. Twisted pairs yield best results. For single compartment housing (Junction Box housing), shielded signal wiring should be used in high EMI/RFI environments. Use 24 AWG to 14 AWG wire and do not exceed 5,000 feet (1500 meters).

3. Plug and seal the unused conduit connection.
4. If applicable, install wiring with a drip loop. Arrange the drip loop so the bottom is lower than the conduit connections and the transmitter housing.
5. Replace the housing cover.

The figures below show the wiring connections necessary to power a 3051S and enable communications with a hand-held Field Communicator.

Figure 6. Transmitter Wiring

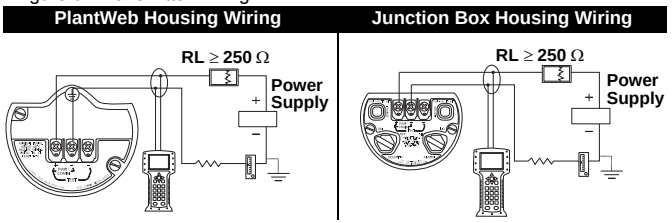

NOTE

Installation of the transient protection terminal block does not provide transient protection unless the 3051S case is properly grounded.

STEP 4 CONTINUED...

Signal Wiring Grounding

Do not run signal wiring in conduit or open trays with power wiring, or near heavy electrical equipment. Grounding terminations are provided on the sensor module and inside the Terminal Compartment. These grounds are used when transient protect terminal blocks are installed or to fulfill local regulations. See Step 2 below for more information on how the cable shield should be grounded.

1. Remove the Field Terminals housing cover.
2. Connect the wiring pair and ground as indicated in Figure 7.
   a. The cable shield should:
      - Be trimmed close and insulated from touching the transmitter housing.
      - Continuously connect to the termination point.
      - Be connected to a good earth ground at the power supply end.

Figure 7. Wiring

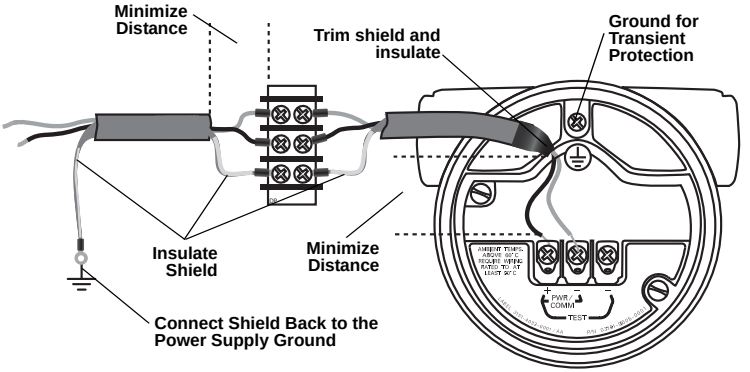

3. Replace the housing cover. It is recommended that the cover be tightened until there is no gap between the cover and the housing.
4. Plug and seal unused conduit connections.

STEP 4 CONTINUED...

Remote Display Wiring and Power Up

The Remote Mount Display and Interface system consists of a local transmitter and a remote mount LCD display assembly. The local 3051S transmitter assembly includes a Junction Box housing with a three position terminal block integrally mounted to a sensor module. The remote mount LCD display assembly consists of a dual compartment PlantWeb housing with a seven position terminal block. See Figure 8 on page 11 for complete wiring instructions. The following is a list of necessary information specific to the Remote Mount Display system:

- Each terminal block is unique for the remote display system.
- A 316 SST housing adapter is permanently secured to the remote mount LCD display PlantWeb housing, providing an external ground and a means for field mounting with the provided mounting bracket.
- A cable is required for wiring between the transmitter and remote mount LCD display. The cable length is limited to 100 ft.
- 50 ft. (option M8) or 100 ft. (option M9) cable is provided for wiring between the transmitter and remote mount LCD display. Option M7 does not include cable; see recommended specifications below:

Cable type: Recommend Belden 3084A DeviceNet cable or Belden 123084A Armored DeviceNet cable. Other comparable cable may be used as long as it has independent dual twisted shielded pair wires with an outer shield. The Power wires must be 22 AWG minimum and the CAN communication wires must be 24 AWG minimum.

Cable length: Up to 100 feet depending upon cable capacitance.

Cable capacitance: The capacitance from the CAN communications line to the CAN return line as wired must be less than 5000 picofarads total. This allows up to 50 picofarads per foot for a 100 foot cable.

STEP 4 CONTINUED...

Intrinsic Safety Consideration: The transmitter assembly with remote display has been approved with Belden 3084A DeviceNet cable. Alternate cable may be used as long as the transmitter with remote display and cable is configured according to the installation control drawing or certificate. Refer to appropriate approval certificate or control drawing in Appendix B of the 3051S reference manual for remote cable IS requirements.

IMPORTANT

Do not apply power to the remote communications terminal. Follow wiring instructions carefully to prevent damage to system components.

Figure 8. Remote Mount Display wiring diagram

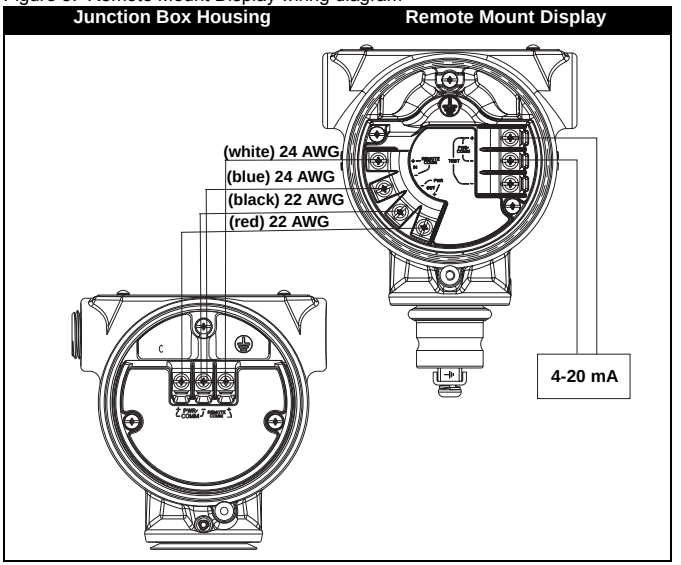

STEP 4 CONTINUED...

NOTE

Wire colors provided on page 11 are per Belden 3084A DeviceNet cable. Wire color may vary depending on cable selected.

Belden 3084A DeviceNet cable includes a ground shield. This shield must be connected to earth ground at either the sensor module or the Remote Display, but not both.

Quick Connect Wiring

As standard, the 3051S Quick Connect arrives properly assembled to the sensor module and is ready for installation. Cordsets and Field Wireable Connectors (in shaded area) are sold separately.

Figure 9. Rosemount 3051S Quick Connect Exploded View

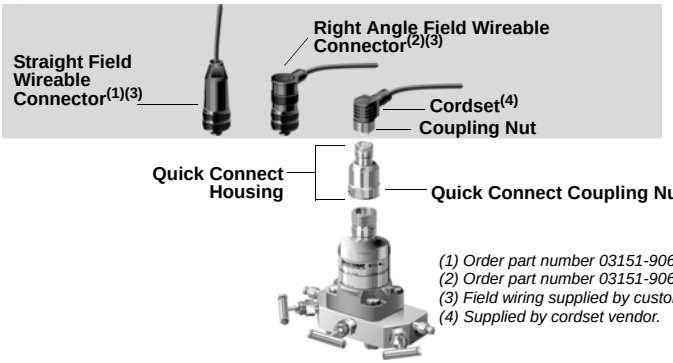

(1) Order part number 03151-9063-0001.
(2) Order part number 03151-9063-0002.
(3) Field wiring supplied by customer.
(4) Supplied by cordset vendor.

IMPORTANT

If Quick Connect is ordered as a 300S spare housing or is removed from the sensor module, follow the instructions below for proper assembly prior to field wiring.

1. Place the Quick Connect onto the sensor module. To ensure proper pin alignment, remove coupling nut prior to installing quick connect onto the sensor module.
2. Place coupling nut over quick connect and wrench tighten to a maximum of 300 in-lb. (34 N-m).
3. Tighten the set screw using a $^{3}/_{32}$-in. hex wrench.
4. Install Cordset/ Field Wireable Connectors onto the Quick Connect. Do not over tighten.

Figure 10. Quick Connect Housing Pin-Out

For other wiring details, refer to pin-out drawing and the cordset manufacturer's installation instructions.

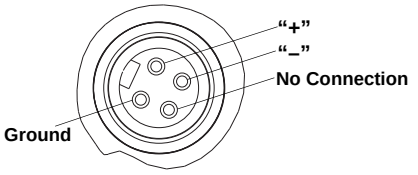

STEP 4 CONTINUED...

Conduit Electrical Connector Wiring (Option GE or GM)

For 3051S transmitters with conduit electrical connectors GE or GM, refer to the cordset manufacturer's installation instructions for wiring details. For FM Intrinsically Safe, non-incendive or FM FISCO Intrinsically Safe hazardous locations, install in accordance with Rosemount drawing 03151-1009 to maintain outdoor rating (NEMA 4X and IP66.) See Appendix B of the 3051S reference manual.

Power Supply

The dc power supply should provide power with less than two percent ripple. The total resistance load is the sum of the resistance of the signal leads and the load resistance of the controller, indicator, and related pieces. Note that the resistance of intrinsic safety barriers, if used, must be included.

Figure 11. Load Limitation

Standard Transmitter

Maximum Loop Resistance =
43.5 * (Power Supply Voltage – 10.5)

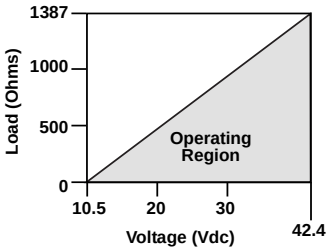

HART Diagnostics Transmitter (option code DA1)

Maximum Loop Resistance =
43.5 * (Power Supply Voltage – 12.0)

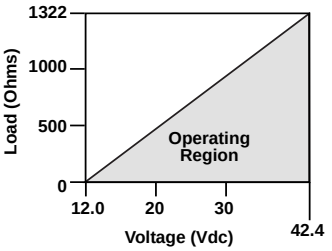

The Field Communicator requires a minimum loop resistance of 250Ω for communication.

STEP 5: VERIFY CONFIGURATION

Use any HART-compliant master to communicate with and verify configuration of the 3051S. For the HART Diagnostics transmitter (option code DA1), DD revision 3051S HDT Dev. 1 Rev. 1 is required.

Field Communicator User Interface

The Traditional Interface - Device Revision 6 or 7 and DD Revision 7 Fast Key Sequence can be found on page 15.

Figure 12. Traditional Interface - Device Revision 6 or 7 and DD Revision 7

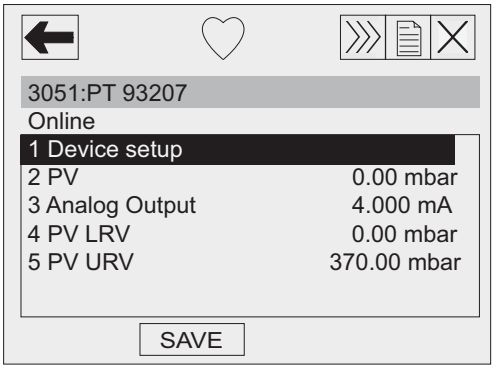

The Device Dashboard - Device Revision 7 and DD Revision 9 Fast Key Sequence can be found on page 16.

Figure 13. Device Dashboard - Device Revision 7 and DD Revision 9

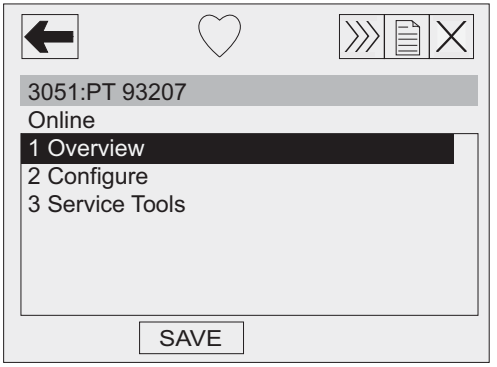

A check (√) indicates the basic configuration parameters. At a minimum, these parameters should be verified as part of the configuration and startup procedure.

Table 1. Traditional Interface - Device Revision 6 or 7 and DD Revision 7 Fast Key Sequence

	Function	Fast Key Sequence
	Alarm Level Configuration	1, 4, 2, 7, 7
	Alarm and Saturation Levels	1, 4, 2, 7
	Analog Output Alarm Direction	1, 4, 2, 7, 6
	Analog Output Trim	1, 2, 3, 2
	Burst Mode On/Off	1, 4, 3, 3, 3
	Burst Options	1, 4, 3, 3, 4
√	Damping	1, 3, 6
	Date	1, 3, 4, 1
	Descriptor	1, 3, 4, 2
	Digital To Analog Trim (4-20 mA Output)	1, 2, 3, 2, 1
	Field Device Information	1, 4, 4, 1
	LCD Display Configuration	1, 3, 7
	Loop Test	1, 2, 2
	Lower Sensor Trim	1, 2, 3, 3, 2
	Message	1, 3, 4, 3
	Number of Requested Preambles	1, 4, 3, 3, 2
	Pressure Alert Configuration	1, 4, 3, 5, 3
	Poll Address	1, 4, 3, 3, 1
	Poll a Multidropped Transmitter	Left Arrow, 3, 1, 1
	Remapping	1, 4, 3, 6
	Rerange- Keypad Input	1, 2, 3, 1, 1
	Saturation Level Configuration	1, 4, 2, 7, 8
	Scaled D/A Trim (4–20 mA Output)	1, 2, 3, 2, 2
	Scaled Variable Configuration	1, 4, 3, 4, 7
	Self Test (Transmitter)	1, 2, 1, 1
	Sensor Information	1, 4, 4, 2
	Sensor Temperature	1, 1, 4
	Sensor Trim	1, 2, 3, 3
	Sensor Trim Points	1, 2, 3, 3, 5
	Status	1, 2, 1, 2
√	Tag	1, 3, 1
	Temperature Alert Configuration	1, 4, 3, 5, 4
√	Transfer Function (Setting Output Type)	1, 3, 5
	Transmitter Security (Write Protect)	1, 3, 4, 5
√	Units (Process Variable)	1, 3, 2
	Upper Sensor Trim	1, 2, 3, 3, 3
	Zero Trim	1, 2, 3, 3, 1

Table 2. Device Dashboard - Device Revision 7 and DD Revision 9 Fast Key Sequence

	Function	Fast Key Sequence
	Alarm and Saturation Levels	2,2,1,7
	Burst Mode Control	2,2,4,2
	Burst Option	2,2,4,3
	Custom Display Configuration	2,1,3
√	Damping	2,2,1,5
	Date	2,2,5,4
	Descriptor	2,2,5,5
	Digital to Analog Trim (4 - 20 mA Output)	3,4,2
	Disable Zero & Span Adjustment	2,2,7,2
	Rerange with Keypad	2,2,1,3,1
	Loop Test	3,5,1
	Lower Sensor Trim	3,4,1,2
	Message	2,2,5,6
	Range Values	2,2,1,3
	Scaled D/A Trim (4 - 20 mA Output)	3,4,2
	Sensor Temperature/Trend (3051S)	3,3,3
√	Tag	2,2,5,1
√	Transfer Function	2,2,1,4
	Transmitter Security (Write Protect)	2,2,7,1
√	Units	2,2,1,2
	Upper Sensor Trim	3,4,1,1
	Zero Trim	3,4,1,3

STEP 6: TRIM THE TRANSMITTER

Transmitters are shipped fully calibrated per request or by the factory default of full scale (lower range value = zero, upper range value = upper range limit).

Zero Trim

A zero trim is a single-point adjustment used for compensating mounting position and line pressure effects. When performing a zero trim, ensure that the equalizing valve is open and all wet legs are filled to the correct level.

If zero offset is less than 3% of true zero, follow the “Using the Field Communicator” instructions below to perform a zero trim. If zero offset is greater than 3% of true zero, follow the “Using the Transmitter Zero Adjustment Button” instructions below to rerange. If hardware adjustments are not available, see the 3051S Reference Manual (document number 00809-0100-4801) to perform a rerange using the Field Communicator.

Using the Field Communicator

Steps

1. Equalize or vent the transmitter and connect Field Communicator.
2. At the menu, input the Fast Key sequence (refer to Table 1 or Table 2).
3. Follow the commands to perform a zero trim.

Using the Transmitter Zero Adjustment Button

Push and hold the zero adjustment button for at least two seconds but no longer than ten seconds.

Figure 14. Transmitter Adjustment Buttons

PlantWeb **Junction Box**

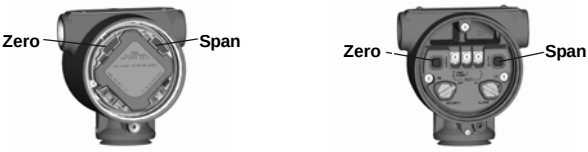

SAFETY INSTRUMENTED SYSTEMS

Additional Safety Instrumented Systems information is available in the Rosemount 3051S reference manual (document number 00809-0100-4801). The manual is available electronically on www.rosemount.com or by contacting an Emerson Process Management representative.

3051S Safety-Certified Identification

All 3051S transmitters must be identified as safety-certified before installing into SIS systems.

NOTE

There are two versions of safety-certified 3051S pressure transmitters. For transmitters with a yellow SIS circuit board installed and output code B in the model number, please refer to Manual Supplement 00809-0700-4801.

To identify a safety-certified 3051S:

1. Connect a HART host to the transmitter.
2. Check the software to verify that the software revision is 7 or higher.

Revision #'s	
Fld Dev Rev	7
Software Rev	7
Hardware Rev	16

Installation

No special installation is required in addition to the standard installation practices outlined in this document. Always ensure a proper seal by installing the electronics housing covers so that metal contacts metal.

The loop should be designed so the terminal voltage does not drop below 10.5 Vdc when the transmitter output is 23.0 mA.

If hardware security switches are installed, the security switch should be in the "ON" position during normal operation. See Figure 5 on page 7. If hardware security switches are not installed, security should be "ON" in the software to prevent accidental or deliberate change of configuration data during normal operation.

Configuration

Use any HART-compliant master to communicate with and verify configuration of the 3051S Safety-Certified Pressure Transmitter (see Table 1 on page 15 or Table 2 on page 16 to verify configuration).

User-selected damping will affect the transmitters ability to respond to changes in the applied process. The *damping value + response time* should not exceed the loop requirements.

NOTES

1. Transmitter output is not safety-rated during the following: configuration changes, multidrop, loop test. Alternative means should be used to ensure process safety during transmitter configuration and maintenance activities.

2. DCS or safety logic solver should be configured to match transmitter configuration. Figure 15 identifies the three alarm levels available and their operation values.

Figure 15. Alarm Levels

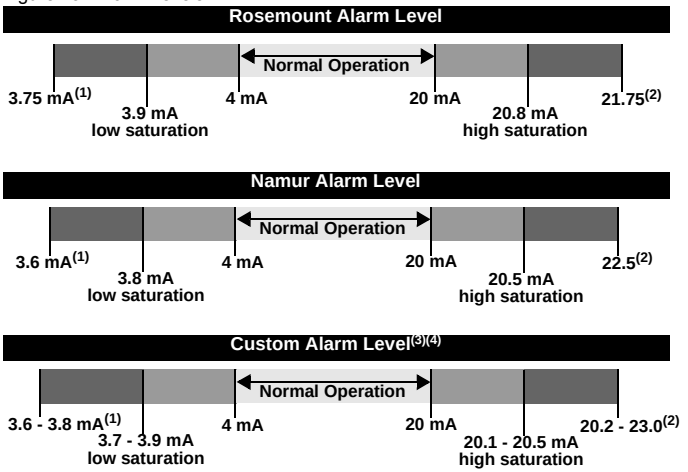

(1) Transmitter Failure, hardware or software alarm in LO position.

(2) Transmitter Failure, hardware or software alarm in HI position.

(3) High alarm must be at least 0.1 mA higher than the high saturation value.

(4) Low alarm must be at least 0.1 mA lower than the low saturation value.

Setting the alarm values and direction is dependent on whether or not the hardware switch option is installed. You can use a HART master or Field Communicator to set the Alarm and Saturation values.

Switches installed

1. If using a Field Communicator, use the fast key sequence to set the Alarm and Saturation values.
2. Manually set the direction for the Alarm to HI or LO using the ALARM switch as shown in Figure 5 on page 7.

Switches not installed

If using a Field Communicator, use the fast key sequence to set the Alarm and Saturation values and the Alarm Direction.

Operation and Maintenance

Proof Test and Inspection

The following proof tests are recommended. Proof test results and corrective actions taken must be documented at *http://rosemount.d1asia.ph/rosemount/safety/ReportAFailure_newweb.asp* in the event that an error is found in the safety functionality.

Use the fast key sequences in Table 1 on page 15 or Table 2 on page 16 to perform a Loop Test, Analog Output Trim, or Sensor Trim. See the 3051S reference manual for additional information.

Proof Test 1

Conducting an analog output Loop Test satisfies the proof test requirements and will detect more than 52% of DU failures not detected by the 3051S_C or 3051S_L automatic diagnostics, and more than 62% of DU failures not detected by the 3051S_T automatic diagnostics.

Required tools: Field Communicator and mA meter.

1. On the Field Communicator, enter the Fast Key Sequence for Loop Test.
2. At the “Choose Analog Output” prompt, select “Other” to manually input a value.
3. Enter the milliampere value representing a high alarm state.
4. Check the reference meter to verify the mA output corresponds to the entered value.
5. Enter the milliampere value representing a low alarm state.
6. Check the reference meter to verify the mA output corresponds to the entered value.
7. Document the test results per your requirements.

Proof Test 2

This proof test, when combined with the Proof Test 1, will detect over 92% of DU failures not detected by the 3051S_C or 3051S_L automatic diagnostics, and over 95% of DU failures not detected by the 3051S_T automatic diagnostics.

Required tools: Field Communicator and pressure calibration equipment.

1. Perform a minimum two point sensor calibration check using the 4-20 mA range points as the calibration points.
2. Check the reference mA meter to verify the mA output corresponds to the pressure input value.
3. If necessary, use one of the “Trim” procedures available in the 3051S reference manual to calibrate.
4. Document the test results per your requirements.

NOTE
The user determines the proof-test requirements for impulse piping.

Visual Inspection

Not required.

Special Tools

Not required.

Product Repair

All failures detected by the transmitter diagnostics or by the proof-test must be reported. Feedback can be submitted electronically at http://rosemount.d1asia.ph/rosemount/safety/ReportAFailure_newweb.asp.

The 3051S is repairable by major component replacement. Follow the instructions in the 3051S reference manual (document number 00809-0100-4801) for additional information.

Reference

Certification

The 3051S Safety-Certified Pressure Transmitter was designed, developed, and audited to be compliant to IEC 61508 safety-certified SIL 2 Claim Limit.

Specifications

The 3051S Safety-Certified Pressure Transmitter must be operated in accordance to the functional and performance specifications provided in the 3051S reference manual.

Failure Rate Data

The FMEDA report includes failure rates and common cause Beta factor estimates. This report is available at http://rosemount.d1asia.ph/rosemount/safety/ReportAFailure_newweb.asp.

3051S Safety-Certified Pressure Transmitter Failure Values

Safety accuracy: 2.0%(1)

Safety response time: 1.5 seconds

Self-diagnostics Test Interval: At least once per hour

Product Life

50 years – based on worst case component wear-out mechanisms – not based on wear-out process wetted materials.

(1) A 2% variation of the transmitter mA output is allowed before a safety trip. Trip values in the DCS or safety logic solver should be derated by 2%.

PRODUCT CERTIFICATIONS

Approved Manufacturing Locations

Rosemount Inc. — Chanhassen, Minnesota USA
Fisher-Rosemount GmbH & Co. — Wessling, Germany
Emerson Process Management Asia Pacific Private Limited — Singapore
Beijing Rosemount Far East Instrument Co., LTD — Beijing, China
Emerson Process Management LTDA — Sorocaba, Brazil
Emerson Process Management (India) Pvt. Ltd. — Daman, India

European Directive Information

The EC declaration of conformity can be found on page 29. The most recent revision can be found at www.rosemount.com.

Ordinary Location Certification for FM Approvals

As standard, the transmitter has been examined and tested to determine that the design meets basic electrical, mechanical, and fire protection requirements by FM Approvals, a nationally recognized testing laboratory (NRTL) as accredited by the Federal Occupational Safety and Health Administration (OSHA).

Hazardous Locations Certifications

North American Certifications

FM Approvals

E5 Explosion proof for Class I, Division 1, Groups B, C, and D, T5 (T_a = 85 °C); dust-ignition proof for Class II and Class III, Division 1, Groups E, F, and G, T5 (T_a = 85 °C); hazardous locations; enclosure Type 4X, conduit seal not required when installed according to Rosemount drawing 03151-1003.

I5 Intrinsically Safe for use in Class I, Division 1, Groups A, B, C, and D, T4 (T_a = 70 °C); Class II, Division 1, Groups E, F, and G; Class III, Division 1; Class I, Zone 0 AEx ia IIC T4 (T_a = 70 °C) when connected in accordance with Rosemount drawing 03151-1006; Non-incendive for Class I, Division 2, Groups A, B, C, and D; T4 (T_a = 70 °C); Enclosure Type 4X
For entity parameters see control drawing 03151-1006.

Canadian Standards Association (CSA)

All CSA hazardous approved transmitters are certified per ANSI/ISA 12.27.01-2003.

E6 Explosion-Proof for Class I, Division 1, Groups B, C, and D; Dust-Ignition-Proof for Class II and Class III, Division 1, Groups E, F, and G; suitable for Class I, Division 2, Groups A, B, C, and D, when installed per Rosemount drawing 03151-1013, CSA Enclosure Type 4X; conduit seal not required; Dual Seal.

I6 Intrinsically Safe for Class I, Division 1, Groups A, B, C, and D when connected in accordance with Rosemount drawings 03151-1016; Dual Seal.
For entity parameters see control drawing 03151-1016.

European Certifications

I1 ATEX Intrinsic Safety
-HART/Remote Display/Quick Connect/HART Diagnostics
Certificate No.: BAS01ATEX1303X ⟨Ex⟩ II 1 G
Ex ia IIC T4 (-60 °C ≤ T_{amb} ≤ 70 °C)
CE 1180

Table 3. Input Parameters

Loop / Power	Groups
U_i = 30 V	All
I_i = 300 mA	All
P_i = 1.0 W	All
C_i = 30 nF	SuperModule™ Platform
C_i = 11.4 nF	HART / HART Diagnostics / Quick Connect
C_i = 0	Remote Display
L_i = 0	All Except Remote Display
L_i = 60 µH	Remote Display
RTD Assembly (3051SFx Option T or R)	
U_i = 5 Vdc	
I_i = 500 mA	
P_i = 0.63 W	

Special Conditions for Safe Use (X)

1. The apparatus, excluding the Types 3051 S-T and 3051 S-C (In-line and Coplanar SuperModule Platforms respectively), is not capable of withstanding the 500 V test as defined in Clause 6.3.12 of EN 60079-11. This must be considered during installation.
2. The terminal pins of the Types 3051 S-T and 3051 S-C must be protected to IP20 minimum.

N1 ATEX Type n
Certificate No.: BAS01ATEX3304X ⟨Ex⟩ II 3 G
Ex nL IIC T5 (-40 °C ≤ T_{amb} ≤ 70 °C)
Ui = 45 Vdc max
Ci = 11.4 nF
Li = 0
For remote display, Ci = 0, Li = 60 µH
IP66
CE

Special Conditions for Safe Use (x)

The apparatus is not capable of withstanding the 500 V insulation test required by Clause 6.8.1 of EN 60079-15. This must be taken into account when installing the apparatus.

NOTE
RTD Assembly is not included with the 3051SFx Type n Approval.

ND ATEX Dust
Certificate No.: BAS01ATEX1374X ⟨Ex⟩ II 1 D
Ex tD A20 T105 °C (-20 °C ≤ T_{amb} ≤ 85 °C)
V_{max} = 42.4 volts max
A = 22 mA
IP66
CE 1180

Special Conditions for safe use (x):

1. Cable entries must be used which maintain the ingress protection of the enclosure to at least IP66.
2. Unused cable entries must be filled with suitable blanking plugs which maintain the ingress protection of the enclosure to at least IP66.
3. Cable entries and blanking plugs must be suitable for the ambient range of the apparatus and capable of withstanding a 7J impact test.
4. The 3051S must be securely screwed in place to maintain the ingress protection of the enclosure. (The 3051S SuperModule must be properly assembled to the 3051S housing to maintain ingress protection.)

E1 ATEX Flameproof
Certificate No.: KEMA00ATEX2143X ⟨Ex⟩ II 1/2 G
Ex d IIC T6 (-50 °C ≤ T_{amb} ≤ 65 °C)
Ex d IIC T5 (-50 °C ≤ T_{amb} ≤ 80 °C)
V_{max} = 42.4 V
CE 1180

Special conditions for safe use (x)

1. Appropriate Ex d blanking plugs, cable glands, and wiring needs to be suitable for a temperature of 90 °C.
2. This device contains a thin wall diaphragm. Installation, maintenance, and use shall take into account the environmental conditions to which the diaphragm will be subjected. The manufacturer's instructions for maintenance shall be followed in detail to assure safety during its expected lifetime.
3. The 3051S does not comply with the requirements of EN 60079-1 Clause 5.2, Table 2 for all joints. Contact Emerson Process Management for information on the dimensions of flameproof joints.

Japanese Certifications

E4 TIIS Flameproof
Ex d IIC T6

Table 4. TIIS Certificates

Certificate	Description
TC15682	Coplanar w/Junction Box Housing
TC15683	Coplanar w/PlantWeb Housing
TC15684	Coplanar w/PlantWeb Housing & LCD Display
TC15685	In-Line SST w/Junction Box Housing
TC15686	In-Line Alloy C-276 w/Junction Box Housing
TC15687	In-Line SST w/PlantWeb Housing
TC15688	In-Line Alloy C-276 w/Plantweb Housing
TC15689	In-Line SST w/Plantweb Housing & LCD Display
TC15690	In-Line Alloy C-276 w/PlantWeb Housing & LCD Display
TC17102	Remote Display
TC17099	3051SFA/C/P SST/Alloy C-276 w/ PlantWeb Housing & LCD Display
TC17100	3051SFA/C/P SST/Alloy C-276 w/ PlantWeb Housing & Remote Display
TC17101	3051SFA/C/P SST/Alloy C-276 w/ Junction Box Housing

China (NEPSI) Certifications

E3 China Flameproof, Dust Ignition-proof
Certificate No. (manufactured in Chanhassen, MN): GYJ091035
Certificate No. (manufactured in Beijing, China): GYJ06366
Certificate No. (manufactured in Singapore): GYJ06364
Certificate No. (3051SFx RTC, BMMC, SMMC): GYJ071086
Ex d IIB+H_2 T3~T5

DIP A21 T_A T3~T5 IP66

Refer to Appendix B of the 3051S Reference Manual (document number 00809-0100-4801) for Special Conditions for Safe Use.

I3 China Intrinsic Safety, Dust Ignition-proof
Certificate No. (manufactured in Chanhassen, MN): GYJ081078
Certificate No. (manufactured in Beijing, China): GYJ06367
Certificate No. (manufactured in Singapore): GYJ06365
Certificate No. (3051SFx RTC, BMMC, SMMC): GYJ071293

Ex ia IIC T4

DIP A21 T_A T4 IP66

Refer to Appendix B of the 3051S Reference Manual (document number 00809-0100-4801) for Special Conditions for Safe Use.

N3 China Type n - Energy Limited
NEPSI Certificate No.: GYJ101112X
Ex nL IIC T5 (-40 °C ≤ Ta ≤ 70 °C)
IP66
Refer to Appendix B of the 3051S Reference Manual (document number 00809-0100-4801) for Special Conditions for Safe Use.

INMETRO Certifications

I2 Brazilian Approval (INMETRO Approval) - Intrinsic Safety
Certificate number: CEPEL-EX-0722/05X (manufacturing in Chanhassen, MN)
Certificate number: CEPEL-EX-1414/07X (manufacturing in Brazil)
INMETRO Marking: BR-Ex ia IIC T4 IP 66W

Special conditions for safe use (x)

The apparatus, excluding the Types 3051S-T and 3051S-C (In-line and Coplanar SuperModule Platforms respectively), is not capable of withstanding the 500 V test as defined in Clause 6.3.12 of IEC 60079.11. This must be considered during installation.

E2 Brazilian Approval (INMETRO Approval) - Flameproof
Certificate number: CEPEL-EX-0722/05X (manufacturing in Chanhassen, MN)
Certificate number: CEPEL-EX-1413/07X (manufacturing in Brazil)
INMETRO Marking: BR-Ex d IIC T5/T6

Special conditions for safe use (x)

1. This device contains a thin wall diaphragm. Installation, maintenance, and use shall take into account the environmental conditions to which the diaphragm will be subjected. The manufacturer's instructions for installation and maintenance shall be followed in detail to assure safety during its expected lifetime.
2. For ambient temperature above 60 ºC, cable wiring must have minimum isolation temperature of 90 ºC, to be in accordance to equipment operation temperature.
3. The accessory of cable entries or conduit must be certified as flameproof and needs to be suitable for use conditions.
4. Where electrical entry is via conduit, the required sealing device must be assembled immediately close to enclosure.

IECEx Certifications

E7 IECEx Flameproof and Dust (each listed separately)

IECEx Flameproof
Certificate No.: IECExKEM08.0010X
Ex d IIC T6 (-50 °C ≤ T_{amb} ≤ 65 °C)
Ex d IIC T5 (-50 °C ≤ T_{amb} ≤ 80 °C)
V_{max} = 42.4 V

Special conditions for safe use (x)

1. Appropriate ex d blanking plugs, cable glands, and wiring needs to be suitable for a temperature of 90 °C.
2. This device contains a thin wall diaphragm. Installation, maintenance, and use shall take into account the environmental conditions to which the diaphragm will be subjected. The manufacturer's instructions for maintenance shall be followed in detail to assure safety during its expected lifetime.
3. The 3051S does not comply with the requirements of IEC 60079-1 Clause 5.2, Table 2 for all joints. Contact Emerson Process Management for information on the dimensions of flameproof joints.

IECEx Dust
Certificate No. IECExBAS09.0014X
Ex tD A20 T105 °C (-20 °C ≤ Tamb ≤ 85 °C)
Vmax = 42.4 V
A = 22 mA
IP66

Special conditions for safe use (x)

1. Cable entries must be used which maintain the ingress protection of the enclosure to at least IP66.
2. Unused cable entries must be filled with suitable blanking plugs which maintain the ingress protection of the enclosure to at least IP66.
3. Cable entries and blanking plugs must be suitable for the ambient range of the apparatus and capable of withstanding a 7J impact test.
4. The 3051S must be securely screwed in place to maintain the ingress protection of the enclosure. (The 3051S SuperModule must be properly assembled to the 3051S housing to maintain ingress protection.)

I7 IECEx Intrinsic Safety
-HART/Remote Display/Quick Connect/HART Diagnostics
Certificate No.: IECExBAS04.0017X
Ex ia IIC T4 (T_a = -60 °C to 70 °C)
IP66

Table 5. Input Parameters

Loop / Power	Groups
U_i = 30 V	All
I_i = 300 mA	All
P_i = 1.0 W	All
C_i = 30 nF	SuperModule™ Platform
C_i = 11.4 nF	HART / HART Diagnostics / Quick Connect
C_i = 0	Remote Display
L_i = 0	All Except Remote Display
L_i = 60 µH	Remote Display
RTD Assembly (3051SFx Option T or R)	
U_i = 5 Vdc	
I_i = 500 mA	
P_i = 0.63 W	

Special conditions for safe use (x)

1. The 3051S HART 4-20 mA, 3051S FOUNDATION fieldbus, 3051S Profibus and 3051S FISCO are not capable of withstanding the 500 V test as defined in clause 6.3.12 of IEC 60079-11. This must be taken into account during installation.
2. The terminal pins of the Types 3051S-T and 3051S-C must be protected to IP20 minimum.

N7 IECEx Type n
Certificate No.: IECExBAS04.0018X
Ex nC IIC T5 (T_a = -40 °C to 70 °C)
Ui = 45 Vdc MAX
IP66
Special conditions for safe use (x)
The apparatus is not capable of withstanding the 500 V insulation test required by Clause 6.8.1 of IEC 60079-15.

Combinations of Certifications

Stainless steel certification tag is provided when optional approval is specified. Once a device labeled with multiple approval types is installed, it should not be reinstalled using any other approval types. Permanently mark the approval label to distinguish it from unused approval types.

K1 Combination of **E1**, **I1**, **N1**, and **ND**
K2 Combination of **E2** and **I2**
K5 Combination of **E5** and **I5**
K6 Combination of **E6** and **I6**
K7 Combination of **E7**, **I7**, and **N7**
KA Combination of **E1**, **I1**, **E6,** and **I6**
KB Combination of **E5**, **I5**, **I6,** and **E6**
KC Combination of **E5**, **E1**, **I5,** and **I1**
KD Combination of **E5, I5, E6, I6, E1,** and **I1**

ROSEMOUNT

CE

EC Declaration of Conformity

No: RMD 1044 Rev. I

We,

Rosemount Inc.
8200 Market Boulevard
Chanhassen, MN 55317-9685
USA

declare under our sole responsibility that the product,

Model 3051S Series Pressure Transmitters
Model 3051SF Series Flowmeter Transmitters
Model 300S Housings

manufactured by,

Rosemount Inc.
12001 Technology Drive
Eden Prairie, MN 55344-3695
USA

and

8200 Market Boulevard
Chanhassen, MN 55317-9687
USA

to which this declaration relates, is in conformity with the provisions of the European Community Directives, including the latest amendments, as shown in the attached schedule.

Assumption of conformity is based on the application of the harmonized standards and, when applicable or required, a European Community notified body certification, as shown in the attached schedule.

(signature)

Vice President, Quality
(function- printed)

Timothy J. Layer
(name-printed)

17 - DECEMBER - 2009
(date of issue)

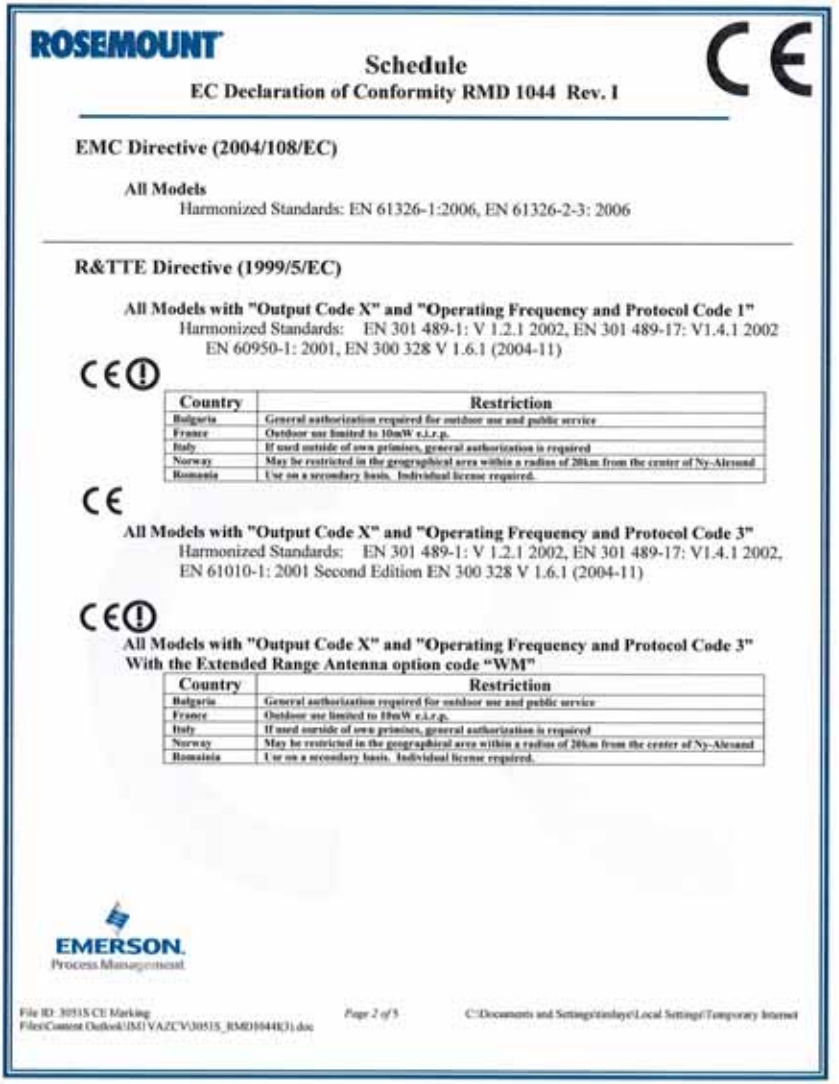

ROSEMOUNT

Schedule

EC Declaration of Conformity RMD 1044 Rev. I

CE

EMC Directive (2004/108/EC)

All Models

Harmonized Standards: EN 61326-1:2006, EN 61326-2-3: 2006

R&TTE Directive (1999/5/EC)

All Models with "Output Code X" and "Operating Frequency and Protocol Code 1"

Harmonized Standards: EN 301 489-1: V 1.2.1 2002, EN 301 489-17: V1.4.1 2002 EN 60950-1: 2001, EN 300 328 V 1.6.1 (2004-11)

CE !

Country	Restriction
Bulgaria	General authorization required for outdoor use and public service
France	Outdoor use limited to 10mW e.i.r.p.
Italy	If used outside of own primises, general authorization is required
Norway	May be restricted in the geographical area within a radius of 20km from the center of Ny-Alesund
Romania	Use on a secondary basis. Individual license required.

CE

All Models with "Output Code X" and "Operating Frequency and Protocol Code 3"

Harmonized Standards: EN 301 489-1: V 1.2.1 2002, EN 301 489-17: V1.4.1 2002, EN 61010-1: 2001 Second Edition EN 300 328 V 1.6.1 (2004-11)

CE !

All Models with "Output Code X" and "Operating Frequency and Protocol Code 3" With the Extended Range Antenna option code "WM"

Country	Restriction
Bulgaria	General authorization required for outdoor use and public service
France	Outdoor use limited to 10mW e.i.r.p.
Italy	If used outside of own primises, general authorization is required
Norway	May be restricted in the geographical area within a radius of 20km from the center of Ny-Alesund
Romania	Use on a secondary basis. Individual license required.

EMERSON. Process Management

File ID: 3051S CE Marking Files\Content Outlook\UMJ VAZCV\3051S_RMD1044(3).doc

Page 2 of 5

C:\Documents and Settings\tinlaye\Local Settings\Temporary Internet

ROSEMOUNT

Schedule

EC Declaration of Conformity RMD 1044 Rev. I

PED Directive (97/23/EC)

3051S series Pressure Transmitters

Model 3051S_CA4; 3051S_CD2, 3, 4, 5 *(also with P9 option)* Pressure Transmitters
QS Certificate of Assessment EC Certificate No. 59552-2009-CE-HOU-DNV
Module H Conformity Assessment
Evaluation standards: ANSI / ISA 61010-1:2004, EC 60770-1 1999

All other model 3051S Pressure Transmitters
Sound Engineering Practice

Transmitter Attachments: Diaphragm Seal - Process Flange - Manifold
Sound Engineering Practice

3051SF Series Flowmeters Pressure Transmitters

Model 3051SF FlowmeterTransmitters (See Table)
QS Certificate of Assessment - CE-41-PED-H1-RMT-001-04-USA
Module __ Conformity Assessment
Evaluation standards:

Model/Randge	PED Category	
	Group 1 Fluid	Group 2 Fluid
3051SFA: 1500# & 2500# All Lines	II	SEP
3051SFA: Sensor Size 2 150# 6"to 24" Line	I	SEP
3051SFA: Sensor Size 2 300# 6"to 24" Line	II	I
3051SFA: Sensor Size 2 600# 6"to 16" Line	II	I
3051SFA: Sensor Size 2 600# 18"to 24" Line	III	II
3051SFA: Sensor Size 3 150# 12"to 44" Line	II	I
3051SFA: Sensor Size 3 150# 46"to 72" Line	III	II
3051SFA: Sensor Size 3 300# 12" to 72" Line	III	II
3051SFA: Sensor Size 3 600# 12"to 48" Line	III	II
3051SFA: Sensor Size 3 600# 60" to 72" Line	IV	III
3051SFP: 150#, 300#, 600# 1-1/2"	I	SEP
3051SFP: 300# & 600# 1-1/2"	II	I
3051SFP: 1-1/2" Threaded & Welded	II	I

EMERSON. Process Management

ROSEMOUNT

Schedule

EC Declaration of Conformity RMD 1044 Rev. I

CE

3051SFP: 1-1/2" Threaded & Welded	II	1

All other model 3051SF Flowmeter Transmitters
Sound Engineering Practice

ATEX Directive (94/9/EC)

Model 3051S Pressure Transmitter

BAS01ATEX1303X – Intrinsic Safety Certificate
Equipment Group II, Category 1 G (Ex ia IIC T4)
Harmonized Standards: EN60079-0: 2006; EN60079-11: 2007

BAS01ATEX3304X – Type n Certificate
Equipment Group II, Category 3 G (Ex nL IIC T5)
Harmonized Standards:EN60079-0: 2006; EN60079-15: 2005

BAS01ATEX1374X – Dust Certificate
Equipment Group II, Category 1 D (Ex tD A20 IP66 T105°C)
Harmonized Standards:Standards used EN61241-0:2006; EN61241-1:2004

Baseefa04ATEX0181X – Mining Certificate
Equipment Group I, Category M 1 (Ex ia I)
Harmonized Standards:EN60079-0: 2006; EN60079-11: 2007; EN50303: 2000

Baseefa05ATEX0193U – Mining Certificate: Component
Equipment Group I, Category M 1 (Ex ia I)
Harmonized Standards:EN60079-0: 2006; EN60079-11: 2007; EN50303: 2000

KEMA00ATEX2143X – Flameproof Certificate
Equipment Group II, Category 1/2 G (Ex d IIC T5 or T6)
Harmonized Standards:EN60079-0: 2006; EN60079-1: 2007; EN60079-26:2007

EMERSON.
Process Management

File ID: 3051S CE Marking
File:\Content.Outlook\IM1VAZCV\3051S_RMD1044[3].doc

Page 4 of 5

C:\Documents and Settings\lindaye\Local Settings\Temporary Internet

ROSEMOUNT

Schedule

EC Declaration of Conformity RMD 1044 Rev. I

CE

PED Notified Body

3051S Series Pressure Transmitters

Det Norske Veritas (DNV) [Notified Body Number: 0575]
Veritasveien 1, N-1322
Hovik, Norway

3051SF Series Flowmeter Transmitters

Plant Safety Limited
Plant Safety Limited [Notified Body Number: 0041]
Parklands, Wilmslow Road, Didsbury
Manchester M20 2RE
United Kingdom

ATEX Notified Bodies for EC Type Examination Certificate

KEMA [Notified Body Number: 0344]
Utrechtseweg 310, 6812 AR Arnhem
P.O. Box 5185, 6802 ED Arnhem
The Netherlands
Postbank 6794687

Baseefa [Notified Body Number: 1180]
Rockhead Business Park, Staden Lane
Buxton, Derbyshire SK17 9RZ
United Kingdom

ATEX Notified Body for Quality Assurance
Baseefa [Notified Body Number: 1180]
Rockhead Business Park, Staden Lane
Buxton, Derbyshire SK17 9RZ
United Kingdom

EMERSON.
Process Management

File ID: 3051S CE Marking
Files\Content Outlook\IM1VA2CV\3051S_RMD1044I(3).doc

Page 5 of 5

C:\Documents and Settings\tirelaye\Local Settings\Temporary Internet

BALON.

Made in USA

FLOATING BALL VALVE INSTALLATION, MAINTENANCE, REPAIR MANUAL

BALON. Corporation • 3245 S. Hattie
Oklahoma City, Oklahoma 73129
Telephone: (405) 677-3321 • Fax: (405) 677-3917
Email:Balon@balon.com • www.balon.com

© 2010 Balon Corporation

TABLE OF CONTENTS

Balon Ball Valve Storage....2
Balon Ball Valve Installation....2
Balon Ball Valve Operation 3

Maintenance For All Balon Ball Valves....4
Seal Kit Contents....4

Series "F" and "S" Screwed End and Flanged End, Lever Operated Parts List....5
Series "F" and "S" Screwed End and Flanged End, Lever Operated Repair Instructions....6
Series "F" Flanged End, Gear Operated Parts List....7
Series "F" Flanged End, Gear Operated Repair Instructions.... 7 & 8
Series "LM" Parts List and Repair Instructions....9
Series "LS" Parts List and Repair Instructions....10
Balon Contact Information....12

WARNING: BEFORE ATTEMPTING TO REPAIR A VALVE THAT HAS BEEN IN SERVICE BE SURE TO BLOCK THE ENDS AND SLOWLY OPEN AND CLOSE THE VALVE TO VENT ANY INTERNAL PRESSURE.

BALON BALL VALVE STORAGE

Balon Corporation ships ball valves in the open position. In order to protect valves during shipment, Balon ships valves in cardboard cartons or wooden boxes. The hand wheels on gear-operated valves are removed and secured to the valves for shipment. With the exception of Series 'LM' and Series 'LS' valves, valve handles are sold and shipped separately from the valves.

Valves should always be stored in the fully open position and should be kept indoors under clean, dry conditions.

BALON BALL VALVE INSTALLATION

With the exception of freeze resistant uni-directional valves, Balon ball valves seal bi-directionally and may be installed in either direction.

Balon valves may be ordered as freeze resistant uni-directional valves. An arrow on the stem of a Balon uni-directional valve indicates the required fl ow direction. These valves are not bi-directional.

Valves should be installed in the open position. Heavy valves should be lifted into position using suitable straps.

Industry accepted make-up practice should be followed when installing flanged end valves.

Balon recommends the use of a high quality thread compound when installing threaded end valves. A back-up wrench should be placed on the valve component (body or end adapter) nearest to the pipe connection that is being adjusted.

Trash, such as welding slag, dirt, sand, and other foreign matter, should always be flushed from the line before operating any valve. It is recommended to fill and drain water while the valve is fully open to avoid trapping debris.

Piping systems are often pressure tested prior to their being placed in service. With valves in the open position or partially open position, valve shell testing may be done at a pressure up to 1.5 times the rated working pressure of the valves. Valves should be kept in the open position or partially open position during shell testing. Valve shell testing should never be done with the valves in the closed position.

With valves in the fully closed position, valve seat testing may be done at pressures up to 1.1 times the rated working pressure of the valves.

The pressure test medium should be eliminated from the system after testing has been completed. Water that is allowed to remain trapped inside valves can freeze. Water that freezes inside valves can damage the valves and associated pipe.

BALON BALL VALVE OPERATION

A ball valve is designed to be used in the fully open or fully closed position. Using a ball valve in the partially open position can result in seat damage and, under certain conditions, damage to other valve components. Applying excessive torque in an attempt to turn a ball beyond its 90 degree stop point could damage the valve stops and misalign the ball.

A valve should always be operated within its pressure and temperature limits.

It is good practice to operate any valve periodically in order to assure that the ball is able to move freely.

BALON BALL VALVE MAINTENANCE
SERIES "F" AND "S" FLANGED END AND SCREWED END
(LEVER OPERATED AND GEAR OPERATED)
SERIES "LM" AND "LS" SCREWED END

MAINTENANCE FOR BALON BALL VALVES:

Balon valves require no regular maintenance to maintain proper operation and sealing. Balon stems require no adjustment or greasing for proper sealing and operation.

SEAL KIT CONTENTS: SERIES "F"AND "S" LEVER OPERATED

1. Seal kits are available for Balon Series "F" and "S" ball valves. Each kit contains the following parts:
   - A. 2 - Ball Seats
   - B. 1 – Body O-Ring
   - C. 1 – Stem TFE Thrust Washer
   - D. 1 – Stem O-Ring
   - E. 1 – Stem Stop Plate Retainer Ring
   - F. 1 - Stem Weather Guard
   - G. 1 - Dust Cover
   - H. 1 - Stop Plate Retainer
   - I. 1 - Stop Plate

SEAL KIT CONTENTS: SERIES "F" GEAR OPERATED

1. Seal kits are available for Balon Series "F" Flanged End Gear Operated ball valves. Each kit contains the following parts:
   - A. 2 - Ball Seats
   - B. 1 - Body O-Ring
   - C. 1 - Stem TFE Thrust Washer
   - D. 1 - Stem O-Ring
   - E. 1 - Stem Stop Plate Retainer Ring
   - G. 1 - Stem Key

SEAL KIT CONTENTS: SERIES "LM" AND "LS"

1. Seal kits are available for Balon Series "LM" and "LS" ball valves. Each kit contains the following parts:
   - A. 2 - Ball Seats
   - B. 1 - Weather Guard
   - C. 1 - Stem Washer
   - D. 1 - Stem Seal
   - E. 1 - Body Seal

Seal kits are sold by valve ball bore size and will fit any Balon ball valve with that bore size, regardless of valve material, end style, or working pressure. (Must specify NACE seal kit if valve has NACE trim. The valve will have letter N in valve part number tag, such as 2R-F63N-RF.) Otherwise, order standard seal kit. If letters TFE appear on valve tag, order Teflon seats.

BALON BALL VALVE PARTS LIST
SERIES "F" AND "S"
(LEVER OPERATED)

ITEM	PART NAME
1	Handle
2	Handle Bolt
3	Weather Guard
4	Lock Plate Retainer
5	Lock Plate
6	Dust Cover
7	Stop Plate Retainer
8	Stop Plate
9	Stem O-Ring
10	Stem Seal
11	Stem
12	Ball
13	Ball Seat
14	Body O-Ring
15	End Adapter
16	Body
17	Body Stud Nuts
18	Body Stud Bolts
19	Body Bolts

Series "F"
Screwed End
Grooved End

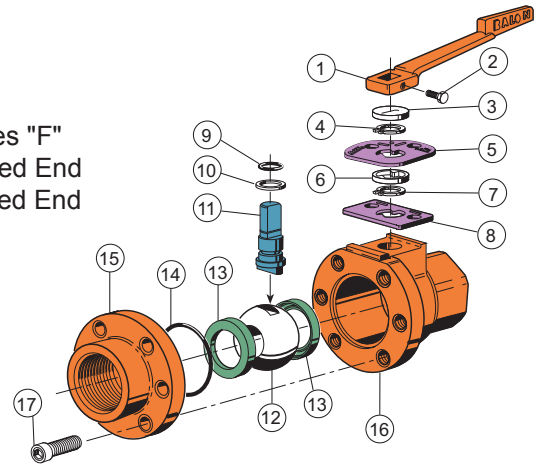

Series "F"
Flanged End

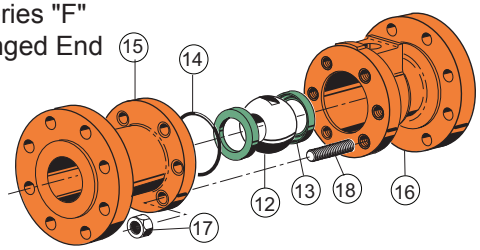

BALON BALL VALVES HAVE A BODY SECTION WHICH CONTAINS THE BALL AND STEM AND THE ADAPTER SECTION THAT BOLTS OR SCREWS TO THE BODY.

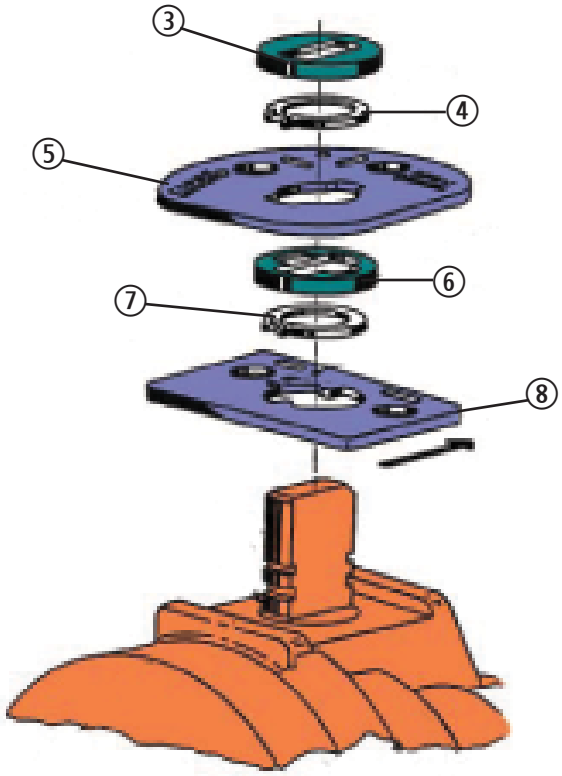

WITH SAFETY LOCK DEVICE
FIGURE 1

Series "F"
Screwed End
Grooved End
1" Full and Larger

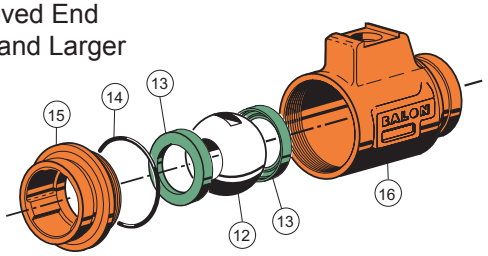

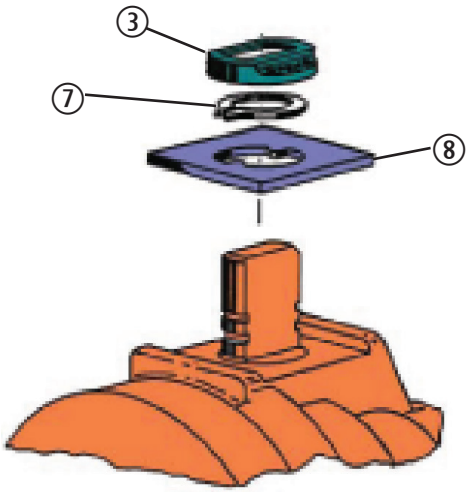

WITHOUT SAFETY LOCK DEVICE
FIGURE 1

WARNING: BEFORE ATTEMPTING TO REPAIR A VALVE THAT HAS BEEN IN SERVICE BE SURE TO BLOCK THE ENDS AND SLOWLY OPEN AND CLOSE THE VALVE TO VENT ANY INTERNAL PRESSURE.

BALON BALL VALVE REPAIR
SERIES "F" AND "S"
(LEVER OPERATED)

1. **<u>WARNING:</u> BEFORE ATTEMPTING TO REPAIR A VALVE THAT HAS BEEN IN SERVICE BE SURE TO BLOCK THE ENDS AND SLOWLY OPEN AND CLOSE THE VALVE TO VENT ANY INTERNAL PRESSURE.**
2. Disassemble valve body and adapter.
3. With valve in closed position remove ball seat (13), body O-Ring (14), and ball (12).
4. Remove stem top works. (Note position of all components.)
5. Before removing stem, carefully file all edges of stem wrench flats and stop plate area to remove any burrs or permanent damage may occur to the stem bore. (FIG. 1)
6. Remove stem (11), stem O-Ring (9), and stem washer (10).
7. Clean all valve components thoroughly.
8. Install new stem seals (9) and (10) and grease.
9. Install stem (11) in valve. Install stop plate (8) and stop plate retainer (7) and fill cavity around stem with grease. **(IF VALVE IS NOT EQUIPPED WITH STANDARD SAFETY LOCK DEVICE (FIG. 2) SKIP TO STEP 10.)** Install dust cover (6). Install lock plate (5). Check for proper alignment, one hole and one slot on lock plate should line up with one hole and one slot on stop plate when fully open or closed. Install lock plate retainer (4). Grease snap ring area and install weather guard (3).
10. Install new ball seats (13) and body O-Ring (14), and grease.
11. Install ball (12).
12. Assemble valve. When installing body to end adapter, be careful not to pinch or damage O-Ring.
13. After valve is assembled, cycle to assure free and easy operation.

SYNTHETIC GREASE THAT IS MOISTURE RESISTANT SHOULD BE USED.
IF ANY PROBLEMS ARE ENCOUNTERED, CONTACT BALON CORPORATION AT 405-677-3321.

BALON

BALON BALL VALVE PARTS LIST
SERIES "F" FLANGED END
(GEAR OPERATED)

ITEM	PART NAME
1	Gear Operator
2	Hand Wheel
3	Drive Pin
4	Stem Key
5	Stem Retainer Ring
6	Mounting Plate
7	Mounting Plate Screws
8	Lock Washers
9	Mounting Screws
10	Stem O-Ring
11	Stem Seal
12	Stem
13	End Adapter
14	Body
15	Body O-Ring
16	Ball Seats
17	Ball
18	Body Stud Nuts
19	Body Stud Bolts

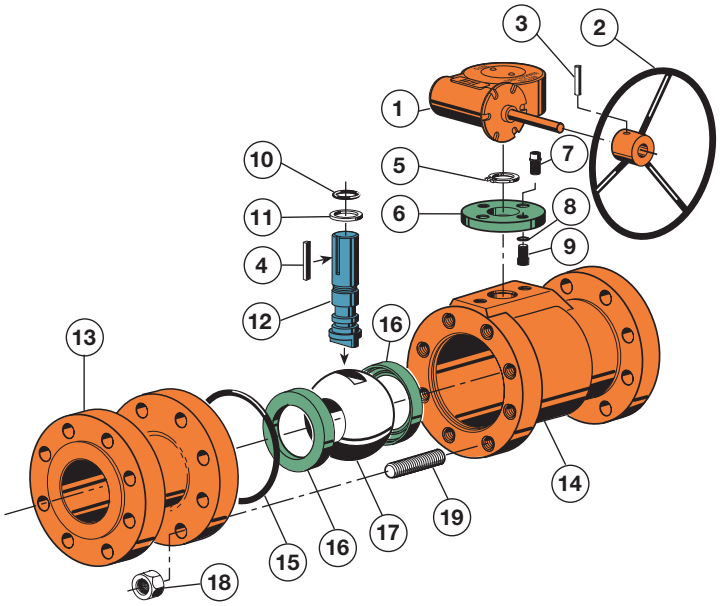

SYNTHETIC GREASE THAT IS MOISTURE RESISTANT SHOULD BE USED.
IF ANY PROBLEMS ARE ENCOUNTERED, CONTACT BALON CORPORATION AT 405-677-3321.

BALON BALL VALVE DISASSEMBLY REPAIR
SERIES "F" FLANGED END
(GEAR OPERATED)

<u>WARNING:</u> BEFORE ATTEMPTING TO REPAIR A VALVE THAT HAS BEEN IN SERVICE BE SURE TO BLOCK THE ENDS AND SLOWLY OPEN AND CLOSE THE VALVE TO VENT ANY INTERNAL PRESSURE.

<u>DISASSEMBLY PROCEDURE FOR BALON BALL VALVES</u>:

1. **NOTE: SEE WARNING ABOVE BEFORE BEGINNING REPAIR OR SERVICE WORK.**
2. After the valve has been removed from the line, place the valve in the vertical position with the valve body section (14) on the bottom. Remove body stud nuts (18). Be careful to protect the machined faces. Lift off end adapter (13).
3. Using gear operator, rotate the stem and ball to the closed position and lift out the ball (17).
4. Remove gear operator mounting screws (9). Pull gear operator off of mounting plate (6).
5. Remove stem retainer ring (5) and stem key (4). Carefully file outside of stem to remove any burrs or **permanent damage** to stem bore can occur.
6. Push stem (12) down into body housing and remove.
7. Remove all seats, seals and O-Rings, part numbers (10), (11), (15), (16).

NOTE: SEE PAGE 8 FOR ASSEMBLY PROCEDURE.

SYNTHETIC GREASE THAT IS MOISTURE RESISTANT SHOULD BE USED.
IF ANY PROBLEMS ARE ENCOUNTERED, CONTACT BALON CORPORATION AT 405-677-3321.

ASSEMBLY PROCEDURE FOR BALON BALL VALVES:

1. Clean all valve components thoroughly and check for corrosion, excessive wear, scoring, etc. (Note: If there is excessive corrosion in seat cavities or stem bore area the valve may not seal nor operate properly when re-assembled.)
2. Install new stem seal (11) and stem O-Ring (10). Grease O-Ring and stem with good quality water impervious grease and install in valve body (14).
3. Install stem retainer ring (5).
4. Install new ball seats (16) in body and adapter cavity and grease seat faces.
5. Grease retainer ring area of stem. Install stem key (4) in stem slot. Mount gear operator (1) on top of stem and rotate gear operator to align its pins with the mating holes on the adapter plate (6). Push Gear Operator down to the adapter plate. Install mounting screws (9) and lock washers (8) and tighten.
6. Using gear operator, rotate stem to closed position. Line up slot on ball with male end of stem in the body cavity and install ball into body cavity.
7. Align the bolt holes on the body and adapter. (Note: On flanged end valves be sure the flanged end bolt holes are aligned with each other.)
8. Set adapter on body. Be careful not to pinch or damage body O-Ring (15). Using hand pressure, push the adapter down to seat the O-Ring.
9. Install nuts and studs or bolts. Tighten bolts, alternating from one side to the opposite side bolt in a clockwise direction.
10. After valve is assembled, cycle to assure free and easy operation.

SYNTHETIC GREASE THAT IS MOISTURE RESISTANT SHOULD BE USED.
IF ANY PROBLEMS ARE ENCOUNTERED, CONTACT BALON CORPORATION AT 405-677-3321.

BALON BALL VALVE PARTS LIST AND REPAIR
SERIES "LM"

ITEM	PART NAME
1	Weather Guard
2	Stem Nut
3	Spacer
4	Lock Plate
5	Handle
6	Stem Washer
7	Stop Pin
8	Stem O-Ring
9	Stem Seal
10	Stem
11	Body
12	Ball Seat
13	Ball
14	Body Seal
15	End Adapter
16	Body Bolts

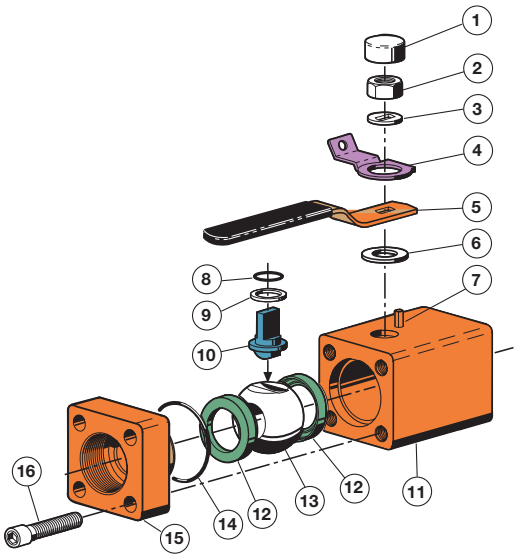

INSTRUCTIONS FOR SEAL REPLACEMENT

1. **WARNING: BEFORE ATTEMPTING TO REPAIR A VALVE THAT HAS BEEN IN SERVICE BE SURE TO BLOCK THE ENDS AND SLOWLY OPEN AND CLOSE THE VALVE TO VENT ANY INTERNAL PRESSURE.**
2. Disassemble valve.
3. Remove all ball seats (12), body seal (14), stem O-Ring (8), and stem washer (6).
4. Clean all valve components thoroughly.
5. Install new stem O-Ring (8) on stem (10) and lubricate. Insert stem and stem seal into body. Then add the new stem washer (6), handle (5), lock plate (4) or lock washer if applicable, and stem nut (2). Tighten nut securely. If applicable, install weather guard (1).
6. Install new ball seats (12) and grease seat faces with a good quality grease.
7. Install body seal (14). NOTE: This kit contains 2 different types of body seals: A white Teflon ring and a rubber O-Ring. For proper seal, you must replace the body seal with the same type as the one that was originally installed.
8. Re-assemble valve. When installing body to end adapter be careful not to pinch or damage body seal.
9. After valve is assembled, cycle to assure free and easy operation.

SYNTHETIC GREASE THAT IS MOISTURE RESISTANT SHOULD BE USED.
IF ANY PROBLEMS ARE ENCOUNTERED, CONTACT BALON CORPORATION AT 405-677-3321.

BALON BALL VALVE PARTS LIST AND REPAIR
SERIES "LS"

ITEM	PART NAME
1	Weather Guard
2	Stem Nut
3	Spacer
4	Lock Plate
5	Handle
6	Stem Washer
7	Stop Pin
8	Stem O-Ring
9	Stem Seal
10	Stem
11	Body
12	Ball Seat
13	Ball
14	Body O-Ring
15	Adapter

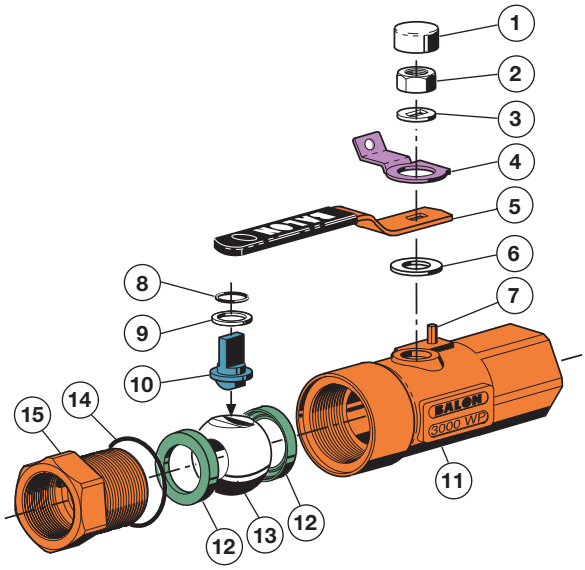

INSTRUCTIONS FOR SEAL REPLACEMENT:

1. **WARNING: BEFORE ATTEMPTING TO REPAIR A VALVE THAT HAS BEEN IN SERVICE BE SURE TO BLOCK THE ENDS AND SLOWLY OPEN AND CLOSE THE VALVE TO VENT ANY INTERNAL PRESSURE.**
2. Disassemble the valve by unscrewing the end adapter.
3. Remove all ball seats (12), body seal (14), stem O-Ring (8), stem seal (9), and stem washer (6).
4. Clean all valve components thoroughly.
5. Install new stem O-Ring (8) and seal (9) on stem (10) and lubricate. Insert stem and stem seal into body. Then add the new stem washer (6), handle (5), lock plate (4) or lock washer if applicable, and stem nut (2). Tighten nut securely. If applicable, install weather guard (1).
6. Install new ball seats (12) and grease seat faces with a good quality grease.
7. Install body seal (14). NOTE: This kit contains 2 different types of body seals: A white Teflon ring and a rubber O-Ring. For proper seal, you must replace the body seal with the same type as the one that was originally installed.
8. Re-assemble valve. When installing body to end adapter be careful not to pinch or damage body seal.
9. After valve is assembled, crimp the end of the body tightly around the end adapter. Cycle to assure free and easy operation.

SYNTHETIC GREASE THAT IS MOISTURE RESISTANT SHOULD BE USED.
IF ANY PROBLEMS ARE ENCOUNTERED, CONTACT BALON CORPORATION AT 405-677-3321.

BALON Corporation
3245 S. Hattie
Oklahoma City, Oklahoma 73129
Téléphone: (405) 677-3321
Fax: (405) 677-3917

E-mail:Balon@Balon.com • www.balon.com

FLOATING BALL VALVES

BALON FLOATING BALL VALVES B-1

BALL VALVE IDENTIFICATION KEY B-2

INTRODUCTION
The Balon Valve: Totally Advanced B-3
Multi-Seal: The Heart of the Valve B-4
An Advanced Concept in Stem Design B-5
A More Complete Solution to Fire Safety B-6

CARBON STEEL VALVES
Threaded End Connection
Series LM, 3000 PSI WP (1/4″ Through 1″) B-7
Series S, To 5000 PSI WP (1″ Through 2″) B-8
Series F, To 5000 PSI WP (1″ Through 4″) B-9
Flanged End Connection
Series F, ANSI 150, 285 PSI WP (2″ Through 6″) B-10
Series F, ANSI 150, 285 PSI WP (6″ Through 10″) B-11
Series F, ANSI 300, 740 PSI WP (2″ Through 6″) B-12
Series F, ANSI 300, 740 PSI WP (6″ Through 8″) B-13
Series F, ANSI 600, 1480 PSI WP (2″ Through 4″) B-14
Series F, ANSI 600, 1480 PSI WP (4″ Through 8″) B-15
Series F, ANSI 900, 2220 PSI WP (2″) B-16
Series F, ANSI 1500, 3705 PSI WP (2″) B-17
Weld x Flange Connection
Series US, ANSI 150, 285 PSI WP (2″ Through 4″) B-18
Series US, ANSI 300, 740 PSI WP (2″ Through 4″) B-19
Weld x Weld Connection
Series US, ANSI 150, 285 PSI WP (2″ Through 6″) B-20
Series US, ANSI 300, 740 PSI WP (2″ Through 6″) B-21

DUCTILE IRON VALVES
Threaded End Connection
Series S, To 2000 PSI WP (1″ Through 4″) B-22
Series F, To 2000 PSI WP (1″ Through 4″) B-23
Grooved End Connection
Series S, 750 PSI WP (2″ Through 4″) B-24
Flanged End Connection
Series F, ANSI Class 300, 640 PSI WP (2″ Through 4″) B-25
Series F, ANSI Class 125, 150, To 250 PSI WP (2″ Through 6″) B-26
Series F, ANSI Class 150, 250 PSI WP (2″ Through 4″) B-27

ALUMINUM BRONZE VALVES
Threaded End Connection
Series S, To 1000 PSI WP (2″ Through 4″) B-28
Series F, To 3000 PSI WP (1″ Through 2″) B-29
Grooved End Connection
Series S, 1000 PSI WP (2″ Through 4″) B-30
Series F, 2000 PSI WP (2″) B-31

STAINLESS STEEL VALVES
Threaded End Connection
Series LS, To 3000 PSI WP (1/4″ Through 1″) B-32
Series S, To 3000 PSI WP (2″) B-33

TECHNICAL INFORMATION
Actuator Sizing / Standards and Specifications B-34
Application Guide B-35
Seat Pressure and Temperature Ratings B-36
Flow Co-Efficient Data B-37
Installation Photos B-38

Floating Ball Valve Identification Key

Balon Threaded End / Grooved End Series F, S, UNI

Nominal Pipe Size	Port Size	Valve Series	Valve Working Pressure	Valve Material	Trim (Ball & Stem Material)	End Connection
2	R Reduced Port	S Threaded Body	2 500 PSI WP	2 Ductile Iron	Not Used if Carbon Steel Standard	S E Threaded End
R	F Full Port	F Bolted Body	3 750 PSI WP	3 Carbon Steel	N NACE Stainless Steel Ball & Stem	G E Grooved End
F			4 1000 PSI WP	4 Aluminum Bronze		
9			6 1500 PSI WP	5 Stainless Steel		
2			9 2000 PSI WP or 2500 PSI WP 2″ Reduced Carbon Steel			
N			0 2500 PSI WP or 3000 PSI WP			
S			5M 5000 PSI WP			
E						

*Note: For Threaded End Unidirectional valve substitute **UNI** for **SE**. For Grooved End Unidirectional valve specify **UNI** after **GE**.*

Balon Flanged End, Weld End Series F, US

Nominal Pipe Size	Port Size	Valve Series	Valve Working Pressure	Valve Material	Trim (Ball & Stem Material)	End Connection
2	R Reduced Port	F Bolted Body	1 ANSI 150 285 WP Carbon Steel Ductile Iron RF 250 WP FF 200 WP	2 Ductile Iron	Not Used if Carbon Steel Standard	R F Raised Face
R	F Full Port	US Weld X Weld Weld X Flange	3 ANSI 300 740 WP Carbon Steel Ductile Iron RF 640 WP	3 Carbon Steel	N NACE Stainless Steel Ball & Stem	R J Ring Type Joint
F			6 ANSI 600 1480 WP			B W Butt Weld
1			9 ANSI 900 2220 WP			W F Weld X Flange
3			0 ANSI 1500 3705 WP			F F Flat Face (Ductile Only)
N						
R						
F						

Balon Threaded End Series L

L Series

Valve Series	Valve Material	Valve Working Pressure	Nominal Pipe Size	Port Size	Trim (Ball & Stem Material)
L	M Carbon Steel Series	3 Carbon Steel	6 3000 PSI WP Carbon Steel 2000 PSI WP Stainless Steel	02 1/4 NPT	1 Reduced Port	Not Used if Carbon Steel
M	S Stainless Steel Series	5 Stainless Steel	9 3000 PSI WP Stainless Steel	05 1/2 NPT	2 Full Port	N Carbon Steel NACE Trim
-				07 3/4 NPT		
02				10 1 NPT		
3						
6						
2						
-						
N						

Note: For any valves not listed please consult factory.

The Balon Valve: Totally Advanced

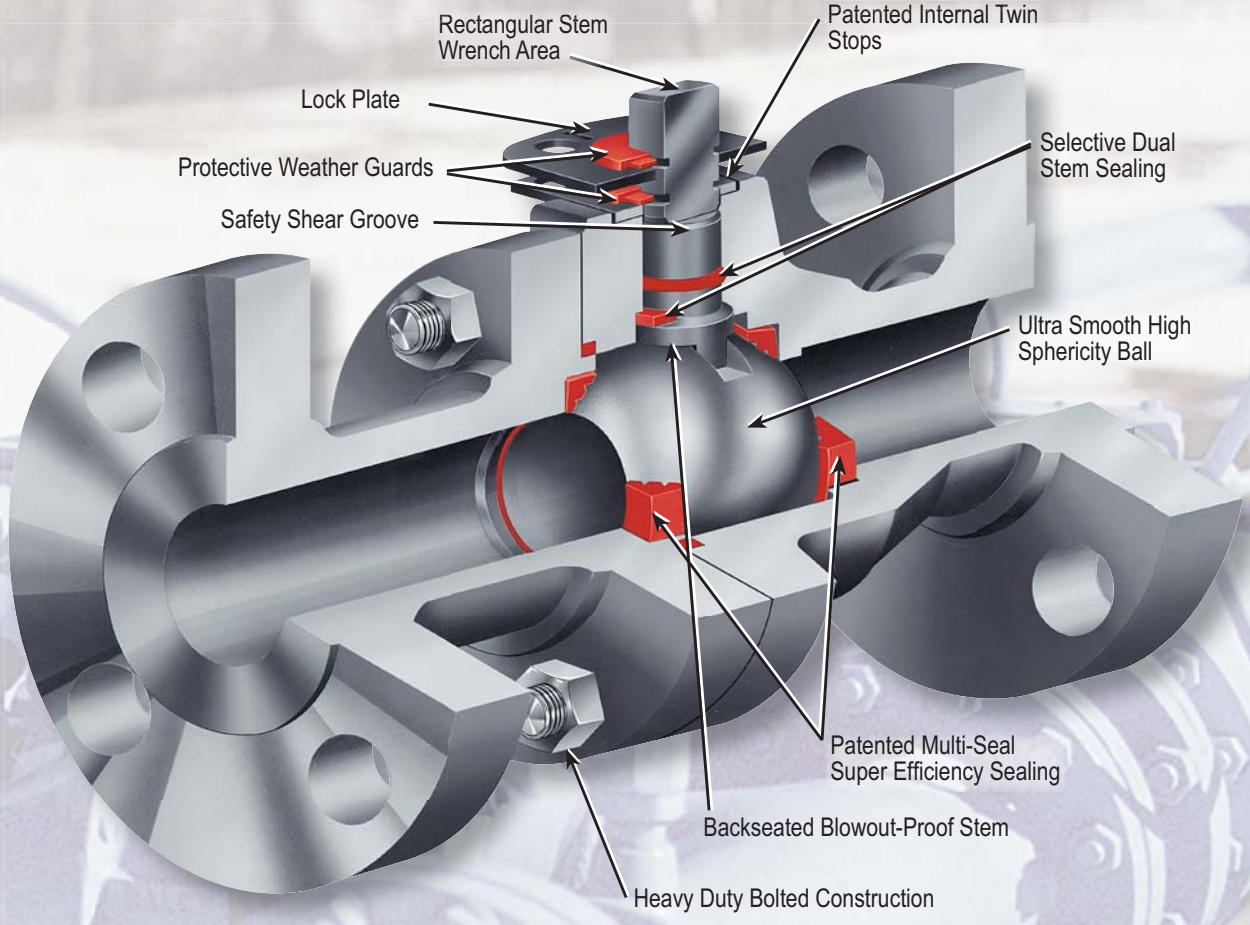

Unique Sealing Approach

The Balon Ball Valve is the culmination of many years of arduous design and development effort which has been focused on providing a better choice in ball valves. It is a refinement of features proven superior during the use of Balon Ball Valves in thousands of installations since 1965.

The multi-seal seat design has given impetus to the development of an overall valve which embodies several design improvements.

Backseated Stem

Stems are backseated and blowout proof. And, they provide metal-to-metal backup sealing in the event of a fire. This secondary metal-to-metal sealing is also provided internally behind the seat area.

Simplified Top Works

Bolts and glands and complicated stem assemblies are totally absent in the Balon valve to assure a simpler, more trouble-free valve. Hazards associated with bolted stem retainer and packing adjustment screws or bolts have been eliminated. Even the stops are internal and give dual precise stopping support during opening and closing. The stem area is grease-packed and protected by dual plastic weather guards to shield this vital area from external elements thereby eliminating the need for maintenance in the field.

Precise Manufacturing Control

Balon uses only the highest quality materials to assure the strength and uniformity necessary for applications where valves are used. To further enhance the overall operational superiority of the valve, all balls are machined in-house by Balon's spherical machining process which assures a consistently accurate spherical contour. They are superbly finished and polished. This high integrity finish, along with multi-seal's advanced sealing capability, provides the highest sealing efficiency and substantially reduced operating torque.

Multi-Seal: The Heart of the Valve

Notice the grooves. These grooves loosely receive any grit that might be present when the valve is closed. When the valve is opened, the foreign matter washes harmlessly away, where an ordinary valve seal could have been scored across its entire surface. Balon's seal is good as new.

Notice the seal rings. Not just one ring...a series. That's where Multi-Seal gets another big sealing edge over plain seals. The rings assure a concentrated seal, providing a bubble tight seal at high and low pressures, the tighter the seal...the better the shut-off.

Notice the tapered outer walls. These tapered walls on the Multi-Seal provide automatic seal-to-ball tensioning and self adjustment to wear. Much longer life and complete trouble-free performance is what you get. That's why you don't need a repair kit.

How long will the Balon Multi-Seal last? Our sales records of replacement seats indicate that most Balon valves sold have provided many years of trouble-free performance.

It has been tested on water pumped at 1,000 psi operating pressure with shock loading on shutoff up to 1,800 psi. After a million shutoffs, it still sealed bubble tight.





Ordinary Seals are damaged during shutoff. As flow is squeezed through fine-line opening, foreign particles are trapped. Complete shutoff grinds them into the seal. Results: premature damage, leakage, valve failure.



Multi-Seal receives particles loosely in grooves, to be washed harmlessly away during next opening. Valve seals bubble tight again, through repeated shutoffs.



Multi-Seal's series groove design features blunt-edge seal members for superior sealing efficiency. And the grooves form super-tight "fluid seal rings." Each seal member, working with the next one, creates exclusive "staged differential pressure sealing," for the tightest shutoff possible at all pressures.



Multi-Seal adjusts itself to wear! Outer walls are tapered to permit self-compensation to valve load and seal engagement demand. The design permits thrust loading to realign seat toward optimum sealing engagement.



The Multi-Seal design permits selection of seal material best suited to abrasive, high and low pressure applications in toughest services. And the relief pockets formed by the tapered walls, with the series grooving, provide self-compensation for swell to permit easy turning, long-life operation. It takes a better seal to make a better valve...and the best ball valve is a Balon.

An Advanced Concept in Stem Design

Balon has eliminated the need for grease fittings, lube channels, and regular lubrication.

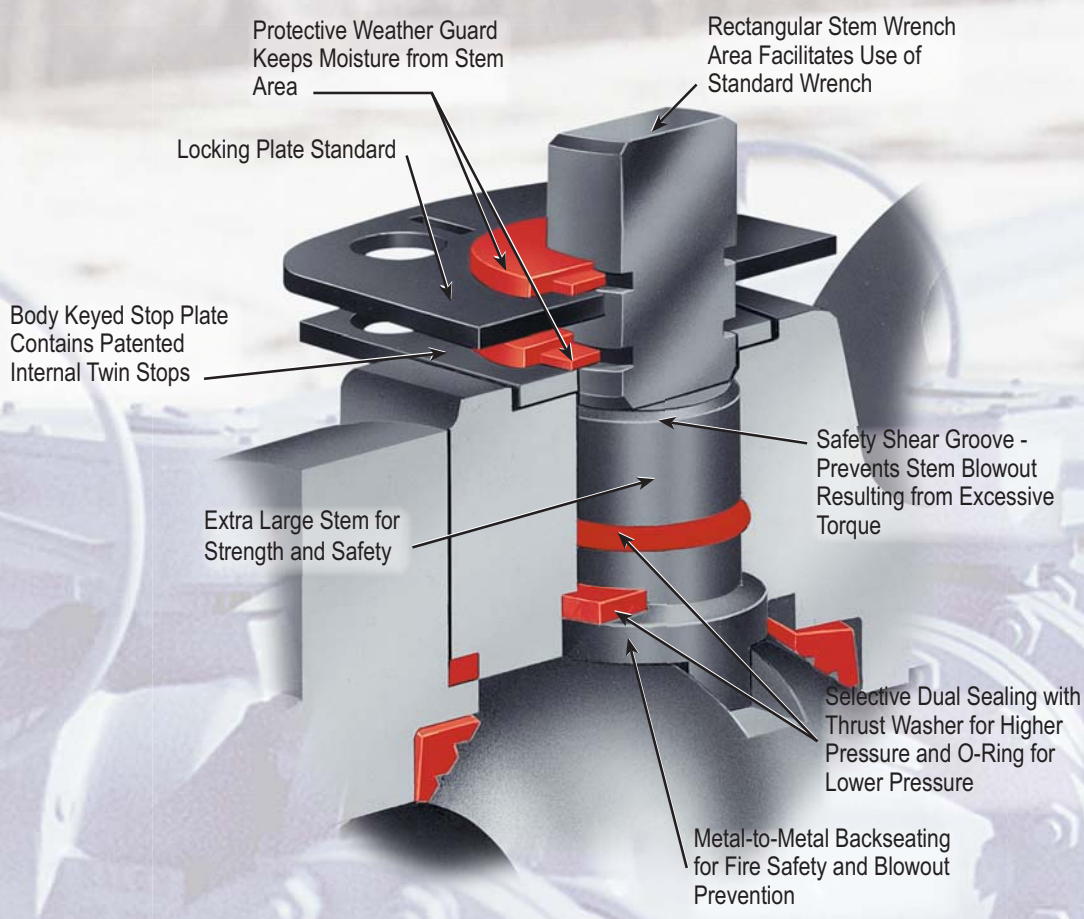

Simple Design

In keeping with Balon's philosophy of design which envisions simplification and improvement instead of improvement by complication, the Balon stem design solves many problems associated with the common stem design. The overall utility of the ball valve is related in no small way to the basic stem design. Certain standard designs originated early and were followed through by ball valve manufacturers in the years following the advent of the ball valve itself during World War II.

The Balon Stem: New Solutions For Old Problems

The Balon design represents the result of a total attack on specific problems associated with the outdated design. In the past, it has been a frequent practice to retain stems by use of external bolts or screws. Often these bolted arrangements also provided stem packing adjustment. The problem of leaking stems was amplified because of the complexity of the assembly itself.

The absence of backseating in early designs opened the way for stem blowout in the event of failure of the retaining assembly or as a result of forcible operation of the valve.

In many former designs, double O-rings were incorporated on the theory that should one O-ring fail to seal, then the second O-ring would perform the sealing job. However, higher pressures trapped between the O-rings often caused high operating torque and other operating problems.

A Combination of Improvements

As shown here, the Balon design is simple, yet solves these problems. The clean, functional design of the stem assembly represents dramatic improvement in many ways over conventional designs. As is true of the overall Balon approach, the Balon stem does not present just one special modification or design innovation. Rather, it represents the bringing together of interrelated improvements, resulting in total improvement and total superiority.

A More Complete Solution to Fire Safety

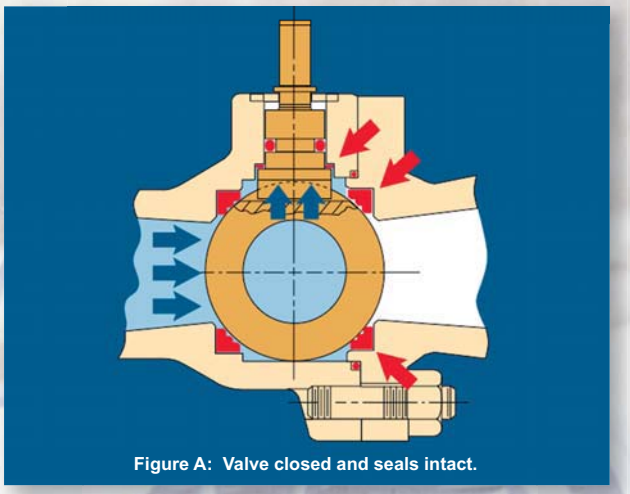

Figure A: Valve closed and seals intact.

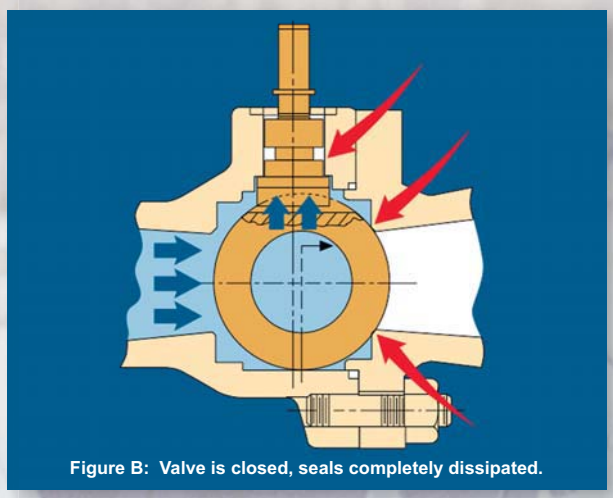

Figure B: Valve is closed, seals completely dissipated.

After many years of development and testing, Balon patented and introduced a ball valve that represented a dramatic turning point in valve safety. It was the first ball valve with the following:

- Backseated stem to prevent stem blowout
- Packless stem gland housing which eliminates stem adjustment mechanisms
- Stem shear groove to assure controlled stem damage above the backseat
- Full Metal spectrum fire safety for metal-to-metal secondary sealing at all potential leak points

Balon then encased these safety improvements in a rugged bolted body assembly capable of withstanding violent thrust loading and line stresses so common in high-pressure line applications.

Fire safety in ball valves has become a major consideration as more and more ball valves have been used in hazardous environments.

The Balon Ball Valve has been designed to provide maximum backup sealing in the event resilient seals are destroyed by heat or fire.

Controlled Spacing

The interior components of the valve, with seals intact, can be seen in Figure “A”. In the closed position the ball is held off of the secondary metal seat position.

The seat and seat pocket are made oversize in radial dimension, allowing close spacing of the ball and metal seat provision. In operation, with prime seals in place, this controlled spacing prevents damage to the surface finish of the ball.

It can also be seen that the stem is backseated, and with seals in place the primary stem seal holds the stem off of the metal shoulder machined in the valve body.

Secondary Stem Seal

In figure “B”, the seals have been fully dissipated, the ball has moved downstream onto the secondary metal seat, and the stem has been checked, metal-to-metal, against the inner shoulder.

As can be seen, the stem is free to move upward when subjected to a slight amount of pressure, onto the machined metal inner shoulder, thus substantially restricting any flow past the stem into the atmosphere.

Straight Ahead Ball Movement

The stem tongue is keyed into a linear milled slot, straight and perpendicular to the bore of the valve. In the closed position, the ball is free to move downstream onto the secondary metal seating, functioning at that moment as a simple ball check valve.

The ball itself is confined in the body with just enough vertical and horizontal clearance to assure free and easy operation. This keeps the ball in uniform alignment so that ball movement onto backseating - should it become necessary - is consistently on a straight course, without deflection up, down or sideways.

The valve may be positioned in either vertical or horizontal installations, and retain its secondary metal-to-metal sealing capability.

These very simple provisions are intended to provide full operational safety in our valves. Every attempt has been made in our design to produce a valve that is safe and affordable.

Balon Ball Valves have been successfully tested by an independent laboratory in accordance with API Standard 6FA “Fire Test for Resilient Seated Ball Valves”. Results of this testing are available on request from Balon’s headquarters.

Series LM Carbon Steel

- Lever Operated Ball Valve
- 3000 PSI WP
- ¼" Through 1"
- Bolted Body Construction



- Multi-Seal Seats
- 316 Stainless Steel Ball and Stem Standard
- Locking Device Standard
- Maintenance Free Sealing

Material Description

ITEM	PART NAME	MATERIAL (STANDARD)	MATERIAL (NACE)
1	Weather Guard	Polyethylene	Polyethylene
2	Stem Nut	Carbon Steel	Carbon Steel
3	Spacer	Carbon Steel	Carbon Steel
4	Lock Plate	Carbon Steel	Carbon Steel
5	Handle*	Carbon Steel	Carbon Steel
6	Stem Washer	Acetal	Acetal
7	Stop Pin	Carbon Steel	Carbon Steel
8	Stem O-Ring	Buna-N	Fluorocarbon
9	Stem Seal	TFE	TFE
10	Stem	316 Stainless Steel	316 Stainless Steel
11	Body	AISI 1215	AISI 1018
12	Ball Seat	Nylon (TFE Optional)	Nylon (TFE Optional)
13	Ball	316 Stainless Steel	316 Stainless Steel
14	Body Seal	Buna-N	Fluorocarbon
15	End Adapter	AISI 1215	AISI 1018
16	Body Bolts	ASTM A193 B7M	ASTM A193 B7M

** Handle and lock device are standard on all Series LM Ball Valves.*

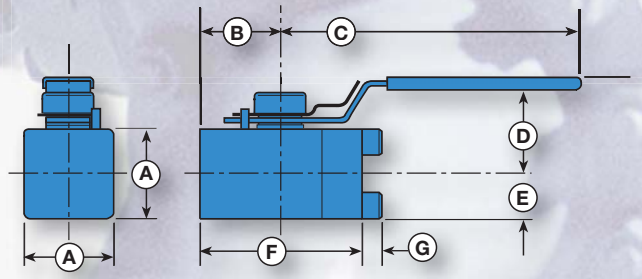

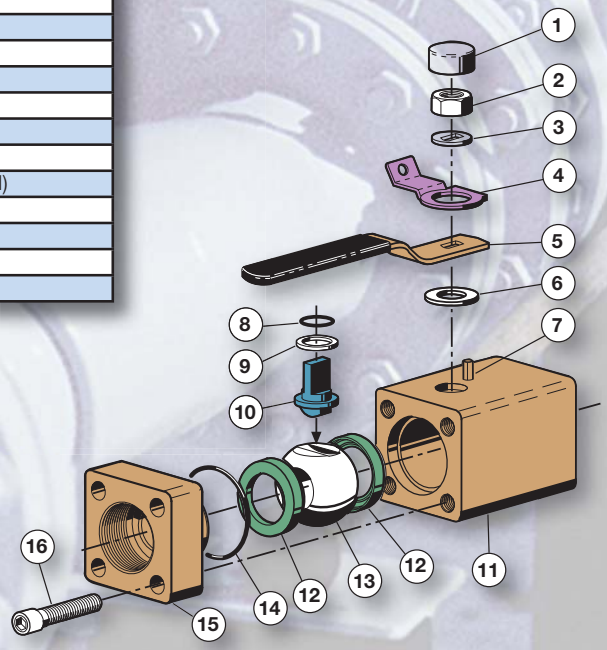

Dimensional Data

SIZE	CATALOG NUMBER		PORT	A	B	C	D	E	F	G	LBS.	Cv
	STANDARD TRIM 316 SS BALL & STEM	NACE TRIM 316 SS BALL & STEM										
.25x.37x.25	LM-02362	LM-02362-N	.37	1.25	1.12	3.5	1.62	.62	2.25	.25	1	-
.50x.37x.50	LM-05361	LM-05361-N	.37	1.25	1.12	3.5	1.62	.62	2.25	.25	1	6
.75x.75x.75	LM-07362	LM-07362-N	.75	2	1.81	4.87	2.25	1	3.62	.37	3.5	-
1x.75x1	LM-10361	LM-10361-N	.75	2	1.81	4.87	2.25	1	3.62	.37	3.5	30



Series S Carbon Steel

- Lever Operated Ball Valve
- To 5000 PSI WP
- 1" Through 2"
- Threaded Body Construction
  - Multi-Seal Seats
  - Fire Safe Design
  - NACE Valves Include 316 Stainless Steel Ball and Stem
  - Rugged Locking Device Standard
  - Maintenance Free Sealing

Material Description

ITEM	PART NAME	MATERIAL (STANDARD)	MATERIAL (NACE)
1	Handle*	Ductile Iron	Ductile Iron
2	Handle Bolt	Standard Hex Bolt	Standard Hex Bolt
3	Weather Guard	Polyethylene	Polyethylene
4	Lock Plate Retainer	Carbon Spring Steel	Carbon Spring Steel
5	Lock Plate	Carbon Steel	Carbon Steel
6	Dust Cover	Polyethylene	Polyethylene
7	Stop Plate Retainer	Carbon Spring Steel	Carbon Spring Steel
8	Stop Plate	Carbon Steel	Carbon Steel
9	Stem O-Ring	Buna-N	Fluorocarbon
10	Stem Seal	TFE	TFE
11	Stem	Carbon Steel	316 Stainless Steel
12	Ball	Carbon Steel Nickel Chrome Plated	316 Stainless Steel
13	Ball Seat	Nylon-Acetal (TFE Optional)	Nylon-Acetal (TFE Optional)
14	Body O-Ring	Buna-N	Fluorocarbon
15	End Adapter**	ASTM A216 Grade WCB/A105	ASTM A216 Grade WCB/A105
16	Body**	ASTM A216 Grade WCB/A105	ASTM A216 Grade WCB/A105

** Balon valves are designed to be operated with a standard open-end wrench. Handle is optional.*

*** Body and end adapter for material is AISI 4140 on 5000 PSI WP valve.*

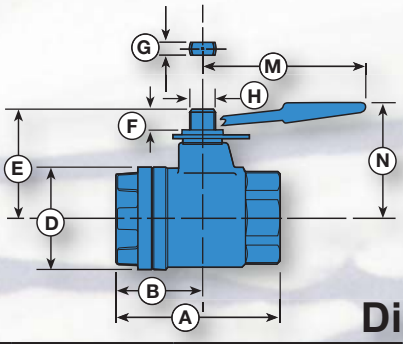

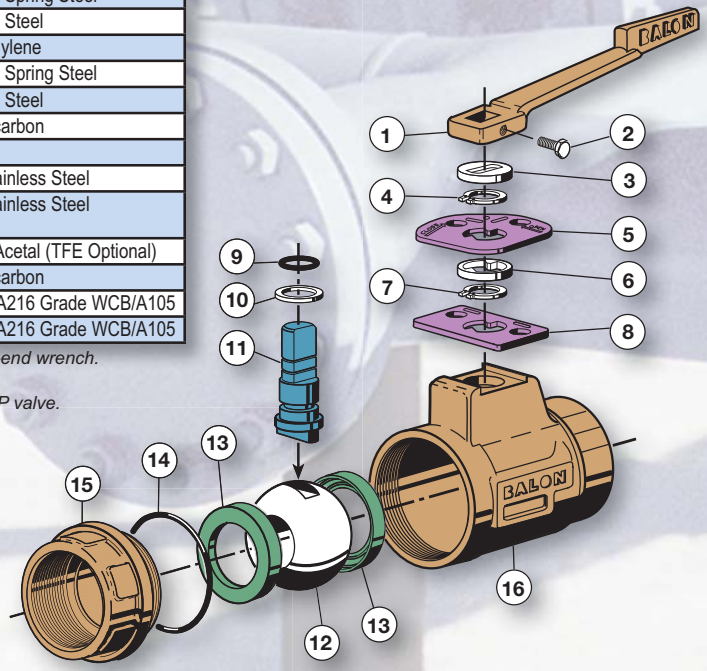

Dimensional Data

SIZE	CATALOG NUMBER		PORT	WP	A	B	D	E	F	G	H	M	N	LBS.	HANDLE	Cv
	STANDARD TRIM CARBON STEEL BALL & STEM	NACE TRIM 316 SS BALL & STEM														
1x1x1	1F-S03-SE	1F-S03N-SE	1	3000	4	2	2.75	2.37	.50	.340	.685	4.37	2	4.5	P-333-CS	-
2x1.5x2	2R-S93-SE	2R-S93N-SE	1.5	2500	5.5	2.75	4.25	3.62	.75	.434	.873	7.25	5	14	P-4128-DI	125
2x1.5x2	2R-S03-SE	2R-S03N-SE	1.5	3000	5.5	2.75	4.25	3.62	.75	.434	.873	7.25	5	14	P-4128-DI	125
2x1.5x2	2R-S5M-SE	2R-S5MN-SE	1.5	5000	5.5	2.75	4.25	3.62	.75	.434	.873	10.25	5.37	14	P-4125-DI	125
2x2x2	2F-S93-SE	2F-S93N-SE	2	2500	6	3.12	4.87	4.37	.75	.497	.998	10.25	5.37	20	P-4129-DI	-
2x2x2	2F-S03-SE	2F-S03N-SE	2	3000	6	3.12	4.87	4.37	.75	.497	.998	10.25	5.37	20	P-4129-DI	-

Series F Carbon Steel

- Lever Operated Ball Valve
- To 5000 PSI WP
- 1" Through 4"
- Bolted Body Construction

- Multi-Seal Seats
- Bolted Body Protects Against End Adapter Blowout
- Fire Safe Design
- NACE Valves Include 316 Stainless Steel Ball and Stem
- Rugged Locking Device Standard
- Maintenance Free Sealing



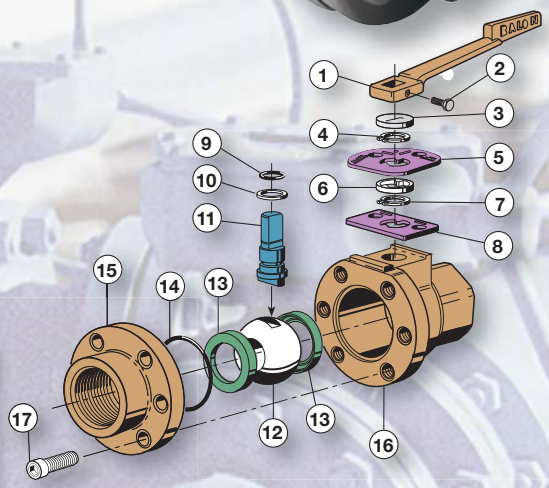

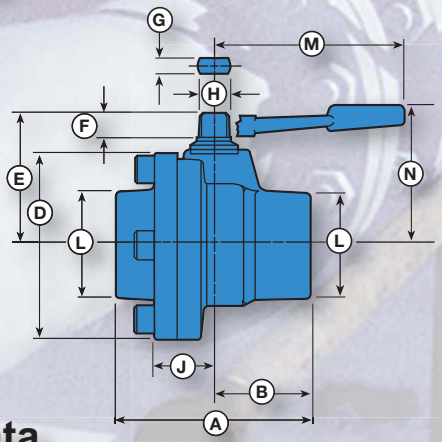

Material Description

ITEM	PART NAME	MATERIAL (STANDARD)	MATERIAL (NACE)
1	Handle*	Ductile Iron	Ductile Iron
2	Handle Bolt	Standard Hex Bolt	Standard Hex Bolt
3	Weather Guard	Polyethylene	Polyethylene
4	Lock Plate Retainer	Carbon Spring Steel	Carbon Spring Steel
5	Lock Plate	Carbon Steel	Carbon Steel
6	Dust Cover	Polyethylene	Polyethylene
7	Stop Plate Retainer	Carbon Spring Steel	Carbon Spring Steel
8	Stop Plate	Carbon Steel	Carbon Steel
9	Stem O-Ring	Buna-N	Fluorocarbon
10	Stem Seal	TFE	TFE
11	Stem	Carbon Steel	316 Stainless Steel
12	Ball	Carbon Steel Nickel Chrome Plated	316 Stainless Steel
13	Ball Seat	Nylon-Acetal (TFE Optional)	Nylon-Acetal (TFE Optional)
14	Body O-Ring	Buna-N	Fluorocarbon
15	End Adapter	ASTM A105	ASTM A105
16	Body	ASTM A105	ASTM A105
17	Body Bolts	ASTM A193 B7M	ASTM A193 B7M

** Balon valves are designed to be operated with a standard open-end wrench. Handle is optional.*

Dimensional Data

SIZE	CATALOG NUMBER		PORT	WP	A	B	D	E	F	G	H	J	L	M	N	LBS.	HANDLE	Cv
	STANDARD TRIM CARBON STEEL BALL & STEM	NACE TRIM 316 SS BALL & STEM																
1x1x1	1F-F93-SE	1F-F93N-SE	1	2500	3.87	1.93	3.37	2.37	.50	.340	.685	1.12	1.87	4.37	2	4.3	P-333-CS	-
1x1x1	1F-F03-SE	1F-F03N-SE	1	3000	3.87	1.93	3.37	2.37	.50	.340	.685	1.12	1.87	4.37	2	4	P-333-CS	-
1.5x1.5x1.5	1.5F-F93-SE	1.5F-F93N-SE	1.5	2500	5.25	2.62	5.12	3.62	.75	.434	.873	1.62	2.50	7.25	5	12.8	P-4128-DI	-
2x1.5x2	2R-F93-SE	2R-F93N-SE	1.5	2500	5.50	2.75	5.12	3.62	.75	.434	.873	1.62	3	7.25	5	13.5	P-4128-DI	125
2x1.5x2	2R-F03-SE	2R-F03N-SE	1.5	3000	5.50	2.75	5.12	3.62	.75	.434	.873	1.62	3	7.25	5	13	P-4128-DI	125
2x1.5x2	2R-F5M-SE	2R-F5MN-SE	1.5	5000	6	3	6	3.62	.75	.434	.873	1.75	3.25	10.25	5.37	20	P-4125-DI	125
2x2x2	2F-F93-SE	2F-F93N-SE	2	2000	5.75	2.87	6.12	4.37	.87	.497	.998	2	3.12	10.25	5.37	20	P-4129-DI	-
2x2x2	2F-F03-SE	2F-F03N-SE	2	2500	5.75	2.87	6.12	4.37	.87	.497	.998	2	3.12	10.25	5.37	20	P-4129-D	-
3x2x3	3R-F93-SE	3R-F93N-SE	2	2000	7.62	3.81	6.87	4.37	.87	.497	.998	2.06	4.25	10.25	5.37	32	P-4129-DI	180
3x3x3	3F-F63-SE	3F-F63N-SE	3	1500	8.37	4.18	8	5.75	1.06	.747	1.373	2.50	4.25	20	6.75	46	P-4127-DI	-
4x3x4	4R-F63-SE	4R-F63N-SE	3	1500	8.87	4.43	8	5.75	1.06	.747	1.375	2.43	5.25	20	6.75	47	P-4127-DI	500



Series F Carbon Steel

- Lever Operated Ball Valve
- ANSI Class 150 (285 PSI WP)
- 2" Through 6"
- Bolted Body Construction

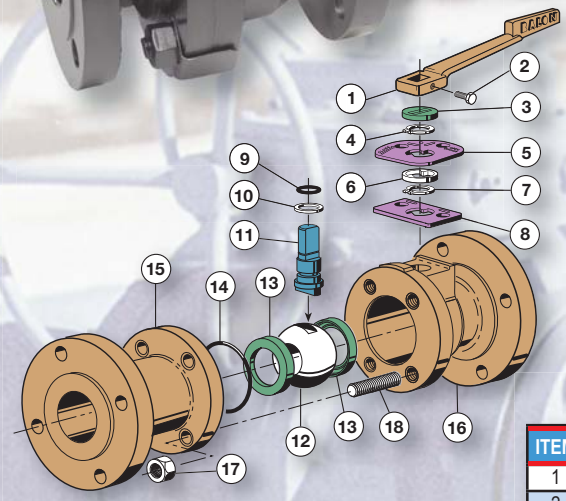

- Multi-Seal Seats
- Fire Safe Design
- NACE Valves Include 316 Stainless Steel Ball and Stem
- Rugged Locking Device Standard
- Maintenance Free Sealing

Note: Most Series F flanged end valves are available for low temperature service. Consult factory for price and availability.

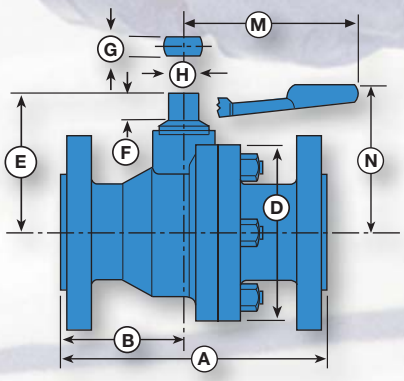

Material Description

ITEM	PART NAME	MATERIAL (STANDARD)	MATERIAL (NACE)
1	Handle*	Ductile Iron	Ductile Iron
2	Handle Bolt	Standard Hex Bolt	Standard Hex Bolt
3	Weather Guard	Polyethylene	Polyethylene
4	Lock Plate Retainer	Carbon Spring Steel	Carbon Spring Steel
5	Lock Plate	Carbon Steel	Carbon Steel
6	Dust Cover	Polyethylene	Polyethylene
7	Stop Plate Retainer	Carbon Spring Steel	Carbon Spring Steel
8	Stop Plate	Carbon Steel	Carbon Steel
9	Stem O-Ring	Buna-N	Fluorocarbon
10	Stem Seal	TFE	TFE
11	Stem	Carbon Steel	316 Stainless Steel
12	Ball	Carbon Steel Nickel Chrome Plated	316 Stainless Steel
13	Ball Seat	Nylon (TFE Optional)	Nylon (TFE Optional)
14	Body O-Ring	Buna-N	Fluorocarbon
15	End Adapter	ASTM A216 GR WCB/A105	ASTM A216 GR WCB/A105
16	Body	ASTM A216 GR WCB/A105	ASTM A216 GR WCB/A105
17	Nuts	ASTM A194 2H	ASTM A194 2HM
18	Body Bolts	ASTM A193 B7	ASTM A193 B7M

** Balon valves are designed to be operated with a standard open-end wrench. Handle is optional.*

Dimensional Data

SIZE	CATALOG NUMBER		PORT	A	B	D	E	F	G	H	M	N	LBS.	HANDLE	Cv
	STANDARD TRIM CARBON STEEL BALL & STEM	NACE TRIM 316 SS BALL & STEM													
2x1.5x2	2R-F13	2R-F13N	1.5	7	3.25	5	3.62	.75	.434	.873	7.25	5	21.5	P-4128-DI	125
2x2x2	2F-F13	2F-F13N	2	7	2.75	6	4.37	.87	.497	.998	10.25	5.37	28	P-4129-DI	-
3x2x3	3R-F13	3R-F13N	2	8	3	6	4.37	.87	.497	.998	10.25	5.37	40	P-4129-DI	200
3x3x3	3F-F13	3F-F13N	3	8	3.56	7.50	5.75	1.06	.747	1.373	20	6.75	54	P-4127-DI	-
4x3x4	4R-F13	4R-F13N	3	9	4.06	7.87	5.75	1.06	.747	1.373	20	6.75	70	P-4127-DI	525
4x4x4	4F-F13	4F-F13N	4	9	4.06	9	6.37	1.06	.747	1.373	20	7.37	80	P-4127-DI	-
6x4x6	6R-F13	6R-F13N	4	10.5	4.81	9.37	6.37	1.06	.747	1.373	20	7.37	102	P-4127-DI	800

Series F Carbon Steel

- **Gear Operated Ball Valve**
- **ANSI Class 150 (285 PSI WP)**
- **6" Through 10"**
- **Bolted Body Construction**



- Exclusive Balon Gearbox
  - ✔ Ductile Housing for Reduced Risk of Damage
  - ✔ Stainless Steel Input Shaft and Directional Indicator Standard
  - ✔ Integral Locking Device Standard
- Multi-Seal Seats
- Fire Safe Design
- NACE Valves Include 316 Stainless Steel Ball and Stem
- Maintenance Free Sealing

Note: Most Series F flanged end valves are available for low temperature service. Consult factory for price and availability.

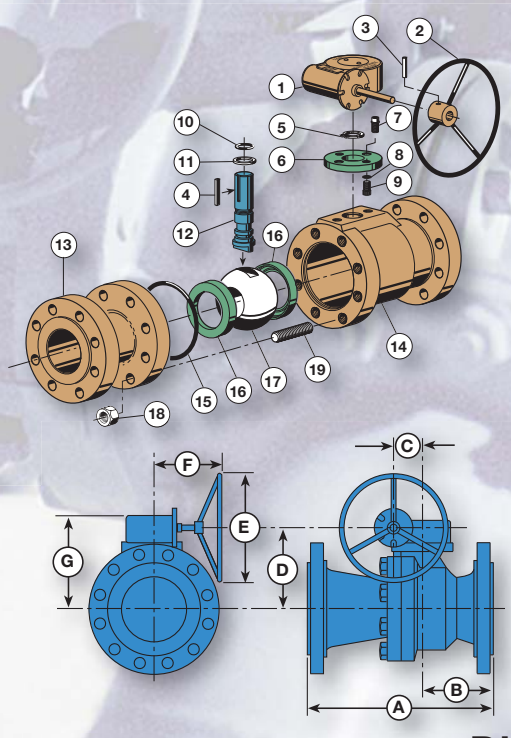

Material Description

ITEM	PART NAME	MATERIAL (STANDARD)	MATERIAL (NACE)
1	Gear Operator	Ductile Iron	Ductile Iron
2	Hand Wheel	Carbon Steel	Carbon Steel
3	Drive Pin	Carbon Spring Steel	Carbon Spring Steel
4	Stem Key	Steel Key Stock	Steel Key Stock
5	Stem Retainer Ring	Carbon Spring Steel	Carbon Spring Steel
6	Mounting Plate	Ductile Iron	Ductile Iron
7	Mounting Plate Screws	Alloy Steel	Alloy Steel
8	Lock Washers	Carbon Steel	Carbon Steel
9	Mounting Screws	Alloy Steel	Alloy Steel
10	Stem O-Ring	Buna-N	Fluorocarbon
11	Stem Seal	TFE	TFE
12	Stem	Carbon Steel	316 Stainless Steel
13	End Adapter	ASTM A216 GR WCB/A105	ASTM A216 GR WCB/A105
14	Body	ASTM A216 GR WCB/A105	ASTM A216 GR WCB/A105
15	Body O-Ring	Buna-N	Fluorocarbon
16	Ball Seats	Nylon (TFE Optional)	Nylon (TFE Optional)
17	Ball	Carbon Steel Nickel Chrome Plated	316 Stainless Steel
18	Nuts	ASTM A194 2H	ASTM A194 2HM
19	Body Bolts	ASTM A193 B7	ASTM A193 B7M

Dimensional Data

SIZE	CATALOG NUMBER		PORT	A	B	C	D	E	F	G	LBS.	Cv
	STANDARD TRIM CARBON STEEL BALL & STEM	NACE TRIM 316 SS BALL & STEM		RF	RF							
6x6x6	6F-F13	6F-F13N	6	10.5	4.50	4	9.75	13	9	11.19	230	-
8x6x8	8R-F13	8R-F13N	6	11.5	5.12	4	9.75	13	9	11.19	285	2200
8x8x8	8F-F13	8F-F13N	8	18	8	5.25	12	20	11.5	13.75	520	-
10x8x10	10R-F13	10R-F13N	8	21	9	5.25	12	20	11.5	13.75	580	4200



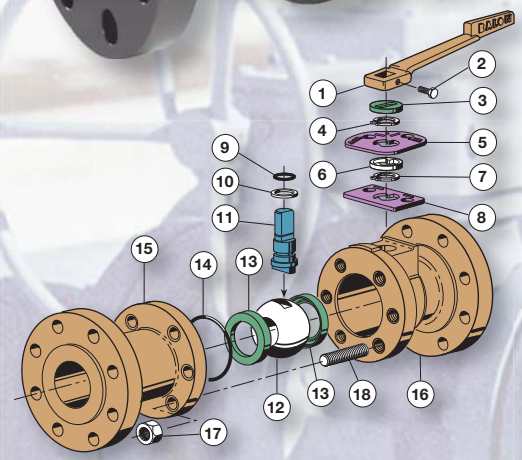

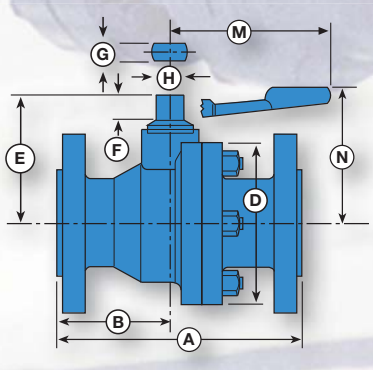

Series F Carbon Steel

- Lever Operated Ball Valve
- ANSI Class 300 (740 PSI WP)
- 2" Through 6"
- Bolted Body Construction

- Multi-Seal Seats
- Fire Safe Design
- NACE Valves Include 316 Stainless Steel Ball and Stem
- Rugged Locking Device Standard
- Maintenance Free Sealing

Note: Most Series F flanged end valves are available for low temperature service. Consult factory for price and availability.

Material Description

ITEM	PART NAME	MATERIAL (STANDARD)	MATERIAL (NACE)
1	Handle*	Ductile Iron	Ductile Iron
2	Handle Bolt	Standard Hex Bolt	Standard Hex Bolt
3	Weather Guard	Polyethylene	Polyethylene
4	Lock Plate Retainer	Carbon Spring Steel	Carbon Spring Steel
5	Lock Plate	Carbon Steel	Carbon Steel
6	Dust Cover	Polyethylene	Polyethylene
7	Stop Plate Retainer	Carbon Spring Steel	Carbon Spring Steel
8	Stop Plate	Carbon Steel	Carbon Steel
9	Stem O-Ring	Buna-N	Fluorocarbon
10	Stem Seal	TFE	TFE
11	Stem	Carbon Steel	316 Stainless Steel
12	Ball	Carbon Steel Nickel Chrome Plated	316 Stainless Steel
13	Ball Seat	Nylon (TFE Optional)	Nylon (TFE Optional)
14	Body O-Ring	Buna-N	Fluorocarbon
15	End Adapter	ASTM A216 GR WCB/A105	ASTM A216 GR WCB/A105
16	Body	ASTM A216 GR WCB/A105	ASTM A216 GR WCB/A105
17	Nuts	ASTM A194 2H	ASTM A194 2HM
18	Body Bolts	ASTM A193 B7	ASTM A193 B7M

** Balon valves are designed to be operated with a standard open-end wrench. Handle is optional.*

Dimensional Data

SIZE	CATALOG NUMBER		PORT	A	B	D	E	F	G	H	M	N	LBS.	HANDLE	Cv
	STANDARD TRIM CARBON STEEL BALL & STEM	NACE TRIM 316 SS BALL & STEM													
2x1.5x2	2R-F33	2R-F33N	1.5	8.50	4	5	3.62	.75	.434	.873	7.25	5	29	P-4128-DI	125
2x2x2	2F-F33	2F-F33N	2	8.50	3.75	6.50	4.37	.87	.497	.998	10.25	5.37	36	P-4129-DI	-
3x2x3	3R-F33	3R-F33N	2	11.12	4.56	6.50	4.37	.87	.497	.998	10.25	5.37	60	P-4129-DI	200
3x3x3	3F-F33	3F-F33N	3	11.12	5.12	8	5.75	1.06	.747	1.373	20	6.75	76	P-4127-DI	-
4x3x4	4R-F33	4R-F33N	3	12	5.56	8	5.75	1.06	.747	1.373	20	6.75	98	P-4127-DI	525
4x4x4	4F-F33	4F-F33N	4	12	5.50	9.37	6.37	1.06	.747	1.373	20	7.37	128	P-4127-DI	-
6x4x6	6R-F33	6R-F33N	4	15.87	7.44	10	6.37	1.06	.747	1.373	20	7.37	196	P-4127-DI	800

Series F Carbon Steel

- Gear Operated Ball Valve
- ANSI Class 300 (740 PSI WP)
- 6" Through 8"
- Bolted Body Construction



- Exclusive Balon Gearbox
  - ✔ Ductile Housing for Reduced Risk of Damage
  - ✔ Stainless Steel Input Shaft and Directional Indicator Standard
  - ✔ Integral Locking Device Standard
- Multi-Seal Seats
- Fire Safe Design
- NACE Valves Include 316 Stainless Steel Ball and Stem
- Maintenance Free Sealing

Note: Most Series F flanged end valves are available for low temperature service. Consult factory for price and availability.

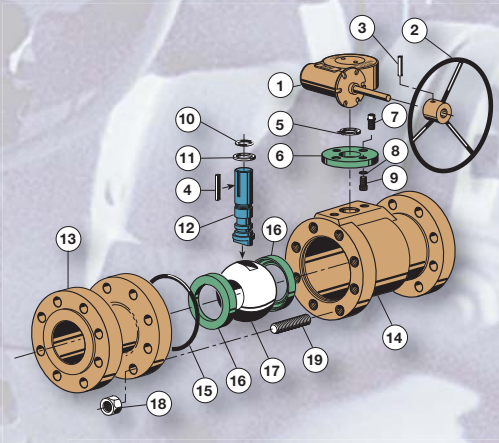

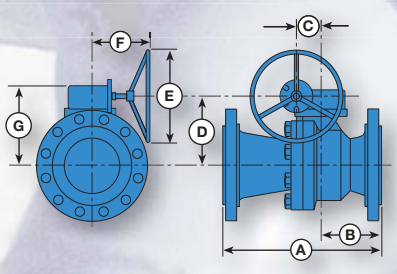

Material Description

ITEM	PART NAME	MATERIAL (STANDARD)	MATERIAL (NACE)
1	Gear Operator	Ductile Iron	Ductile Iron
2	Hand Wheel	Carbon Steel	Carbon Steel
3	Drive Pin	Carbon Spring Steel	Carbon Spring Steel
4	Stem Key	Steel Key Stock	Steel Key Stock
5	Stem Retainer Ring	Carbon Spring Steel	Carbon Spring Steel
6	Mounting Plate	Ductile Iron	Ductile Iron
7	Mounting Plate Screws	Alloy Steel	Alloy Steel
8	Lock Washers	Carbon Steel	Carbon Steel
9	Mounting Screws	Alloy Steel	Alloy Steel
10	Stem O-Ring	Buna-N	Fluorocarbon
11	Stem Seal	TFE	TFE
12	Stem	Carbon Steel	316 Stainless Steel
13	End Adapter	ASTM A216 GR WCB/A105	ASTM A216 GR WCB/A105
14	Body	ASTM A216 GR WCB/A105	ASTM A216 GR WCB/A105
15	Body O-Ring	Buna-N	Fluorocarbon
16	Ball Seats	Nylon (TFE Optional)	Nylon (TFE Optional)
17	Ball	Carbon Steel Nickel Chrome Plated	316 Stainless Steel
18	Nuts	ASTM A194 2H	ASTM A194 2HM
19	Body Bolts	ASTM A193 B7	ASTM A193 B7M

Dimensional Data

SIZE	CATALOG NUMBER		PORT	A	B	C	D	E	F	G	LBS.	Cv
	STANDARD TRIM CARBON STEEL BALL & STEM	NACE TRIM 316 SS BALL & STEM		RF	RF							
6x6x6	6F-F33	6F-F33N	6	15.87	7.38	4	9.75	13	9	11.19	307	-
8x6x8	8R-F33	8R-F33N	6	16.50	7.69	4	9.75	13	9	11.19	409	2200

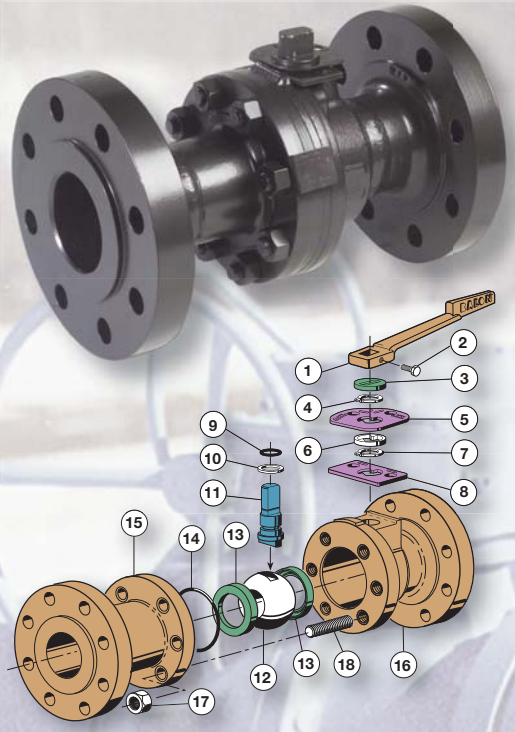

Series F Carbon Steel

- Lever Operated Ball Valve
- ANSI Class 600 (1480 PSI WP)
- 2" Through 4"
- Bolted Body Construction

- Multi-Seal Seats
- Fire Safe Design
- NACE Valves Include 316 Stainless Steel Ball and Stem
- Rugged Locking Device Standard
- Maintenance Free Sealing

Note: Most Series F flanged end valves are available for low temperature service. Consult factory for price and availability.

Material Description

ITEM	PART NAME	MATERIAL (STANDARD)	MATERIAL (NACE)
1	Handle*	Ductile Iron	Ductile Iron
2	Handle Bolt	Standard Hex Bolt	Standard Hex Bolt
3	Weather Guard	Polyethylene	Polyethylene
4	Lock Plate Retainer	Carbon Spring Steel	Carbon Spring Steel
5	Lock Plate	Carbon Steel	Carbon Steel
6	Dust Cover	Polyethylene	Polyethylene
7	Stop Plate Retainer	Carbon Spring Steel	Carbon Spring Steel
8	Stop Plate	Carbon Steel	Carbon Steel
9	Stem O-Ring	Buna-N	Fluorocarbon
10	Stem Seal	TFE	TFE
11	Stem	Carbon Steel	316 Stainless Steel
12	Ball	Carbon Steel Nickel Chrome Plated	316 Stainless Steel
13	Ball Seat	Nylon (TFE Optional)	Nylon (TFE Optional)
14	Body O-Ring	Buna-N	Fluorocarbon
15	End Adapter	ASTM A216 GR WCB/A105	ASTM A216 GR WCB/A105
16	Body	ASTM A216 GR WCB/A105	ASTM A216 GR WCB/A105
17	Nuts	ASTM A194 2H	ASTM A194 2HM
18	Body Bolts	ASTM A193 B7	ASTM A193 B7M

** Balon valves are designed to be operated with a standard open-end wrench. Handle is optional.*

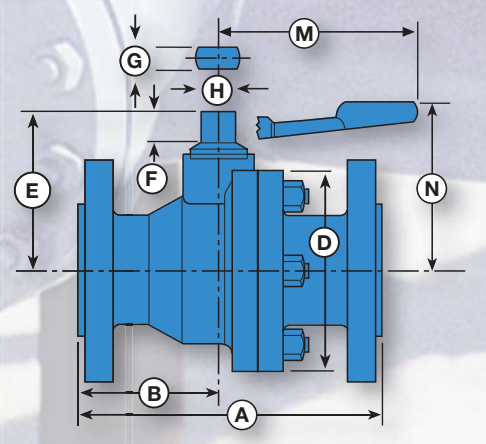

Dimensional Data

SIZE	CATALOG NUMBER		PORT	A		B		D	E	F	G	H	M	N	LBS.	HANDLE	Cv
	STANDARD TRIM CARBON STEEL BALL & STEM	NACE TRIM 316 SS BALL & STEM		RF	RTJ	RF	RTJ										
2x1.5x2	2R-F63	2R-F63N	1.5	11.5	11.62	5.06	5.12	5.37	3.62	.75	.434	.873	7.25	5	37	P-4128-DI	125
2x2x2	2F-F63	2F-F63N	2	11.5	11.62	4.75	4.81	6.50	4.37	.87	.497	.998	10.25	5.37	48	P-4129-DI	-
3x2x3	3R-F63	3R-F63N	2	14	14.12	5.75	5.81	6.62	4.37	.87	.497	.998	10.25	6.75	69	P-4129-DI	200
3x3x3	3F-F63	3F-F63N	3	14	14.12	5.50	5.56	8	5.75	1.06	.747	1.373	20	6.75	90	P-4127-DI	-
4x3x4	4R-F63	4R-F63N	3	17	17.12	6.87	6.93	8.62	5.75	1.06	.747	1.373	20	6.75	154	P-4127-DI	525

Series F Carbon Steel

- **Gear Operated Ball Valve**
- **ANSI Class 600 (1480 PSI WP)**
- **4" Through 8"**
- **Bolted Body Construction**



- Exclusive Balon Gearbox
  - ✔ Ductile Housing for Reduced Risk of Damage
  - ✔ Stainless Steel Input Shaft and Directional Indicator Standard
  - ✔ Integral Locking Device Standard
- Multi-Seal Seats
- Fire Safe Design
- NACE Valves Include 316 Stainless Steel Ball and Stem
- Maintenance Free Sealing

Note: Most Series F flanged end valves are available for low temperature service. Consult factory for price and availability.

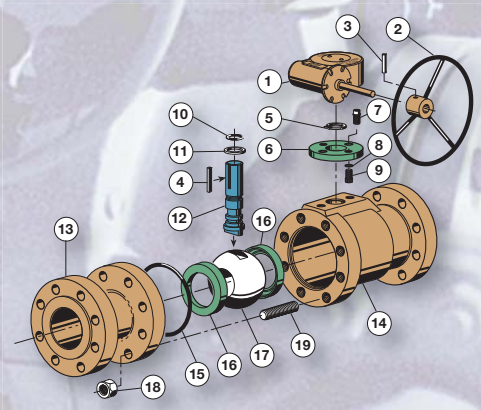

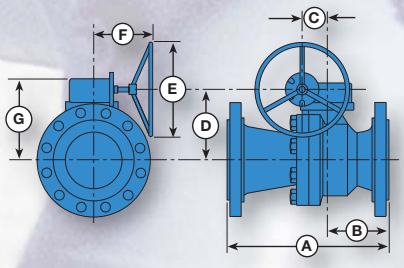

Material Description

ITEM	PART NAME	MATERIAL (STANDARD)	MATERIAL (NACE)
1	Gear Operator	Ductile Iron	Ductile Iron
2	Hand Wheel	Carbon Steel	Carbon Steel
3	Drive Pin	Carbon Spring Steel	Carbon Spring Steel
4	Stem Key	Steel Key Stock	Steel Key Stock
5	Stem Retainer Ring	Carbon Spring Steel	Carbon Spring Steel
6	Mounting Plate	Ductile Iron	Ductile Iron
7	Mounting Plate Screws	Alloy Steel	Alloy Steel
8	Lock Washers	Carbon Steel	Carbon Steel
9	Mounting Screws	Alloy Steel	Alloy Steel
10	Stem O-Ring	Buna-N	Fluorocarbon
11	Stem Seal	TFE	TFE
12	Stem	Carbon Steel	316 Stainless Steel
13	End Adapter	ASTM A216 GR WCB/A105	ASTM A216 GR WCB/A105
14	Body	ASTM A216 GR WCB/A105	ASTM A216 GR WCB/A105
15	Body O-Ring	Buna-N	Fluorocarbon
16	Ball Seats	Nylon (TFE Optional)	Nylon (TFE Optional)
17	Ball	Carbon Steel Nickel Chrome Plated	316 Stainless Steel
18	Nuts	ASTM A194 2H	ASTM A194 2HM
19	Body Bolts	ASTM A193 B7	ASTM A193 B7M

Dimensional Data

SIZE	CATALOG NUMBER		PORT	A		B		C	D	E	F	G	LBS.	Cv
	STANDARD TRIM CARBON STEEL BALL & STEM	NACE TRIM 316 SS BALL & STEM		RF	RTJ	RF	RTJ							
4x4x4	4F-F63	4F-F63N	4	17	17.12	7.37	7.43	3	8.19	13	9	9.69	238	-
6x4x6	6R-F63	6R-F63N	4	22	22.12	9.88	9.25	3	8.19	13	9	9.69	340	800
6x6x6	6F-F63	6F-F63N	6	22	22.12	8.62	8.68	4	9.75	20	11	11.19	440	-
8x6x8	8R-F63	8R-F63N	6	26	26.12	10.62	10.68	4	9.75	20	11	11.19	570	2200

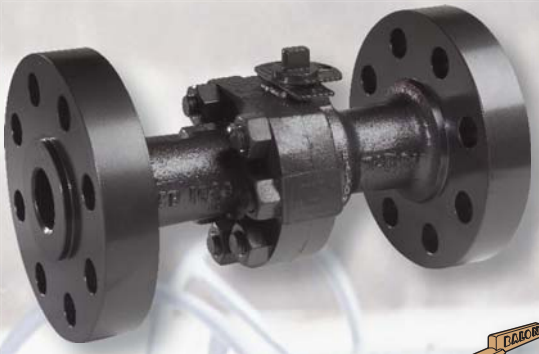

Series F Carbon Steel

- Lever Operated Ball Valve
- ANSI Class 900 (2220 PSI WP)
- 2"
- Bolted Body Construction

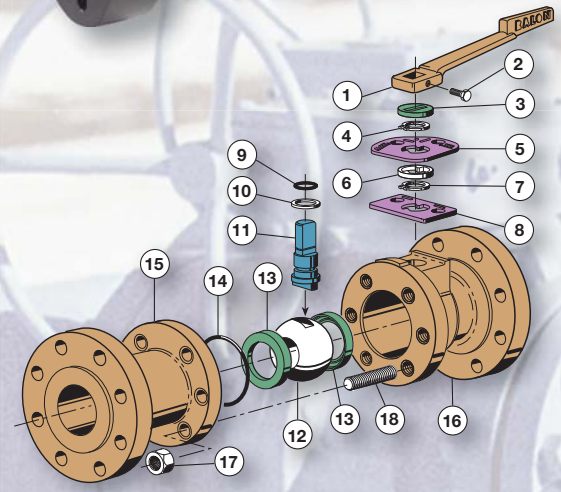

- Multi-Seal Seats
- Fire Safe Design
- NACE Valves Include 316 Stainless Steel Ball and Stem
- Rugged Locking Device Standard
- Maintenance Free Sealing

Note: Most Series F flanged end valves are available for low temperature service. Consult factory for price and availability.

Material Description

ITEM	PART NAME	MATERIAL (STANDARD)	MATERIAL (NACE)
1	Handle*	Ductile Iron	Ductile Iron
2	Handle Bolt	Standard Hex Bolt	Standard Hex Bolt
3	Weather Guard	Polyethylene	Polyethylene
4	Lock Plate Retainer	Carbon Spring Steel	Carbon Spring Steel
5	Lock Plate	Carbon Steel	Carbon Steel
6	Dust Cover	Polyethylene	Polyethylene
7	Stop Plate Retainer	Carbon Spring Steel	Carbon Spring Steel
8	Stop Plate	Carbon Steel	Carbon Steel
9	Stem O-Ring	Buna-N	Fluorocarbon
10	Stem Seal	TFE	TFE
11	Stem	Carbon Steel	316 Stainless Steel
12	Ball	Carbon Steel Nickel Chrome Plated	316 Stainless Steel
13	Ball Seat	Nylon (TFE Optional)	Nylon (TFE Optional)
14	Body O-Ring	Buna-N	Fluorocarbon
15	End Adapter	ASTM A216 GR WCB/A105	ASTM A216 GR WCB/A105
16	Body	ASTM A216 GR WCB/A105	ASTM A216 GR WCB/A105
17	Nuts	ASTM A194 2H	ASTM A194 2HM
18	Body Bolts	ASTM A193 B7	ASTM A193 B7M

** Balon valves are designed to be operated with a standard open-end wrench. Handle is optional.*

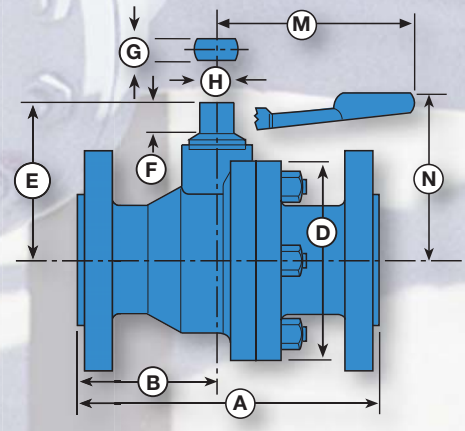

Dimensional Data

SIZE	CATALOG NUMBER		PORT	A		B		D	E	F	G	H	M	N	LBS.	HANDLE	Cv
	STANDARD TRIM CARBON STEEL BALL & STEM	NACE TRIM 316 SS BALL & STEM		RF	RTJ	RF	RTJ										
2x1.5x2	2R-F93	2R-F93N	1.5	14.50	14.62	6.31	6.37	6.25	3.62	.75	.434	.873	7.25	5	75	P-1104-DI	125
2x2x2	2F-F93	2F-F93N	2	14.50	14.62	6	6.06	7	4.37	.87	.497	.998	10.25	5.37	81	P-1105-DI	-

Series F Carbon Steel

- Lever Operated Ball Valve
- ANSI Class 1500 (3705 PSI WP)
- 2"
- Bolted Body Construction

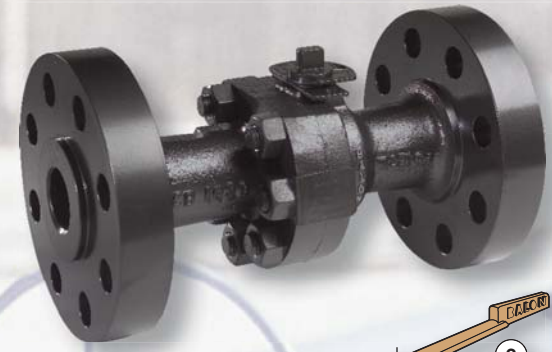

- Multi-Seal Seats
- Fire Safe Design
- NACE Valves Include 316 Stainless Steel Ball and Stem
- Rugged Locking Device Standard
- Maintenance Free Sealing

Note: Most Series F flanged end valves are available for low temperature service. Consult factory for price and availability.

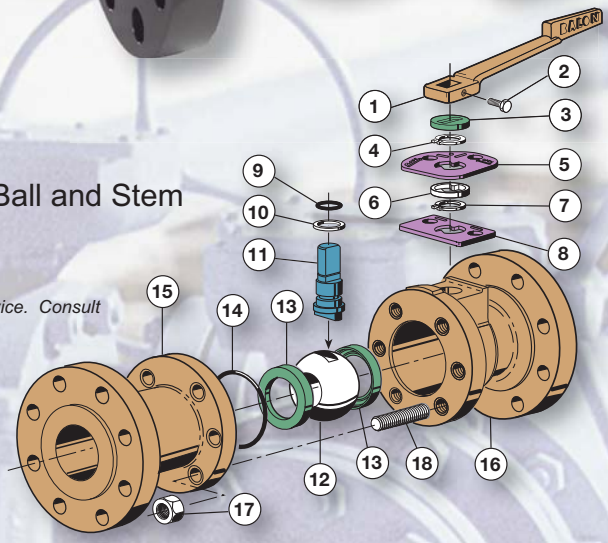

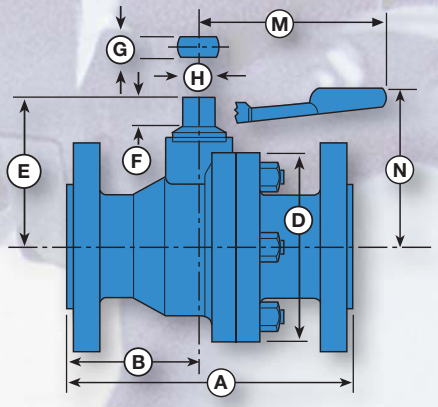

Material Description

ITEM	PART NAME	MATERIAL (STANDARD)	MATERIAL (NACE)
1	Handle*	Ductile Iron	Ductile Iron
2	Handle Bolt	Standard Hex Bolt	Standard Hex Bolt
3	Weather Guard	Polyethylene	Polyethylene
4	Lock Plate Retainer	Carbon Spring Steel	Carbon Spring Steel
5	Lock Plate	Carbon Steel	Carbon Steel
6	Dust Cover	Polyethylene	Polyethylene
7	Stop Plate Retainer	Carbon Spring Steel	Carbon Spring Steel
8	Stop Plate	Carbon Steel	Carbon Steel
9	Stem O-Ring	Buna-N	Fluorocarbon
10	Stem Seal	TFE	TFE
11	Stem	Carbon Steel	316 Stainless Steel
12	Ball	Carbon Steel Nickel Chrome Plated	316 Stainless Steel
13	Ball Seat	Acetal	Acetal
14	Body O-Ring	Buna-N	Fluorocarbon
15	End Adapter	ASTM A216 GR WCB/A105	ASTM A216 GR WCB/A105
16	Body	ASTM A216 GR WCB/A105	ASTM A216 GR WCB/A105
17	Nuts	ASTM A194 2H	ASTM A194 2HM
18	Body Bolts	ASTM A193 B7	ASTM A193 B7M

** Balon valves are designed to be operated with a standard open-end wrench. Handle is optional.*

Dimensional Data

SIZE	CATALOG NUMBER		PORT	A		B		D	E	F	G	H	M	N	LBS.	HANDLE	Cv
	STANDARD TRIM CARBON STEEL BALL & STEM	NACE TRIM 316 SS BALL & STEM		RF	RTJ	RF	RTJ										
2x1.5x2	2R-F03	2R-F03N	1.5	14.5	14.62	6.31	6.37	6.25	3.62	.75	.434	.873	7.25	5	75	P-1104-DI	125

Series US Weld X Flange Carbon Steel



- Weld X Flange Ball Valve
- ANSI Class 150 (285 PSI WP)
- 2" Through 4"

- Multi-Seal Seats
- True Full Port for Hot Tap Service
- Heat Dissipating Fins for Protection of Seats and Seals During Welding
- Rugged Stainless Steel Lock Plate
- Heavy Duty Forged Steel Components
- Solid Balls for Reduction of Turbulence and Pressure Drop
- Stainless Steel Stem Standard

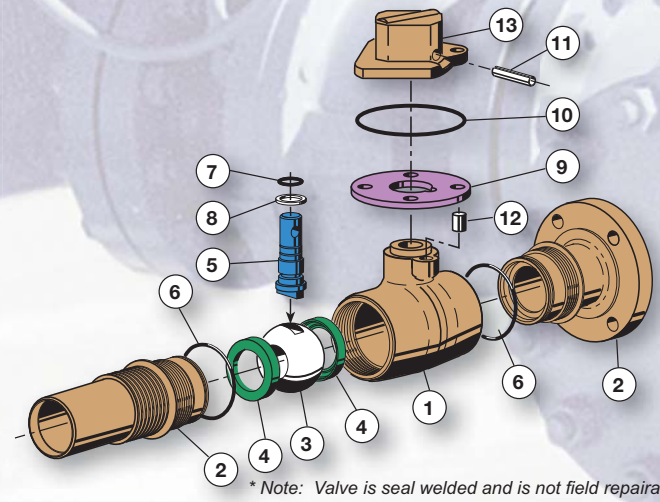

** Note: Valve is seal welded and is not field repairable.*

Material Description

ITEM	PART NAME	MATERIAL (STANDARD)
1	Body	ASTM A105
2	Adapter	ASTM A105
3	Ball	Carbon Steel - Nickel Chrome Plated
4	Seats	Nylon
5	Stem	316 Stainless Steel
6	Body O-Ring	Buna-N
7	Stem O-Ring	Buna-N
8	Stem Seal	TFE
9	Lock Plate	Stainless Steel
10	Weather Seal	Polyethylene
11	Roll Pin	Stainless Steel
12	Stop Pin	Stainless Steel
13	Drive Nut - 2" Square	Ductile Iron

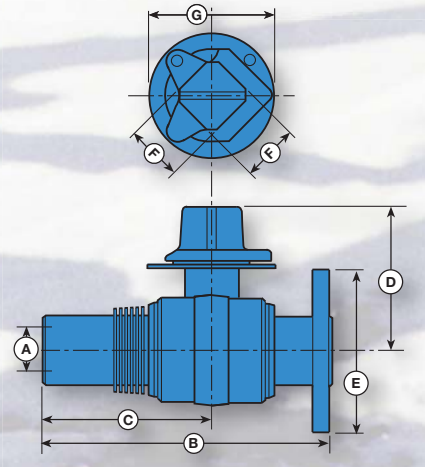

Dimensional Data

SIZE	CATALOG	PORT/A	B	C	D	E	F	G	LBS.	Cv
2x1.5x2	2R-US13-WF	1.5	9.4	5.9	5	6	2	4.5	20	148
2x2x2	2F-US13-WF	2	10	5.9	5.50	6	2	4.5	28	-
3x2.5x3	3R-US13-WF	2.5	9.9	5.9	6.12	7.5	2	4.5	40	550
3x3x3	3F-US13-WF	3	11.3	5.9	6.75	7.5	2	4.5	53	-
4x3x4	4R-US13-WF	3	10.9	6.4	6.75	9	2	4.5	60	662
4x4x4	4F-US13-WF	4	12.1	6.4	7.50	9	2	4.5	81	-

Series US Weld X Flange Carbon Steel

- Weld X Flange Ball Valve
- ANSI Class 300 (740 PSI WP)
- 2" Through 4"



- Multi-Seal Seats
- True Full Port for Hot Tap Service
- Heat Dissipating Fins for Protection of Seats and Seals During Welding
- Rugged Stainless Steel Lock Plate
- Heavy Duty Forged Steel Components
- Solid Balls for Reduction of Turbulence and Pressure Drop
- Stainless Steel Stem Standard

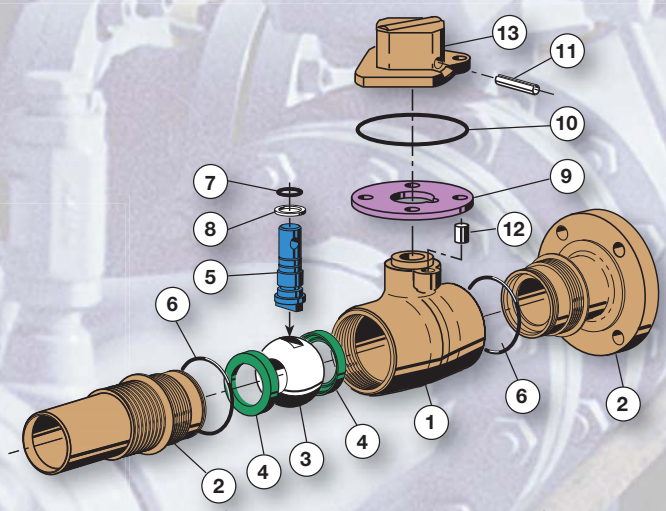

** Note: Valve is seal welded and is not field repairable.*

Material Description

ITEM	PART NAME	MATERIAL (STANDARD)
1	Body	ASTM A105
2	Adapter	ASTM A105
3	Ball	Carbon Steel - Nickel Chrome Plated
4	Seats	Nylon
5	Stem	316 Stainless Steel
6	Body O-Ring	Buna-N
7	Stem O-Ring	Buna-N
8	Stem Seal	TFE
9	Lock Plate	Stainless Steel
10	Weather Seal	Polyethylene
11	Roll Pin	Stainless Steel
12	Stop Pin	Stainless Steel
13	Drive Nut - 2" Square	Ductile Iron

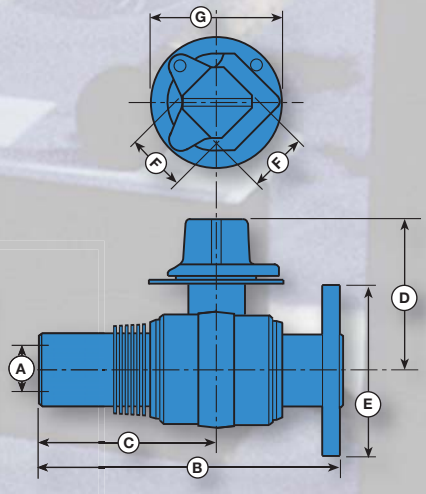

Dimensional Data

SIZE	CATALOG	PORT/A	B	C	D	E	F	G	LBS.	Cv
2x1.5x2	2R-US33-WF	1.5	10.15	5.9	5	6.50	2	4.5	23	148
2x2x2	2F-US33-WF	2	10.2	5.9	5.50	6.50	2	4.5	28	-
3x2.5x3	3R-US33-WF	2.5	11.46	5.9	6.12	8.25	2	4.5	48	550
3x3x3	3F-US33-WF	3	11.5	5.9	6.75	8.25	2	4.5	56	-
4x3x4	4R-US33-WF	3	12.4	6.4	6.75	10	2	4.5	70	662
4x4x4	4F-US33-WF	4	12.4	6.4	7.50	10	2	4.5	91	-

Series US Weld X Weld Carbon Steel



- Weld End Ball Valve
- ANSI Class 150 (285 PSI WP)
- 2" Through 6"

- Multi-Seal Seats
- Heat Dissipating Fins for Protection of Seats and Seals During Welding
- Rugged Stainless Steel Lock Plate
- Heavy Duty Forged Steel Components
- Solid Balls for Reduction of Turbulence and Pressure Drop
- Stainless Steel Stem Standard

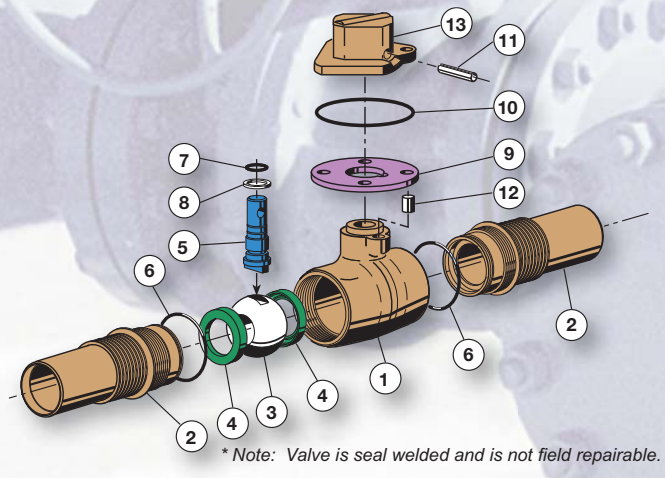

** Note: Valve is seal welded and is not field repairable.*

Material Description

ITEM	PART NAME	MATERIAL (STANDARD)
1	Body	ASTM A105
2	Adapter	ASTM A105
3	Ball	Carbon Steel - Nickel Chrome Plated
4	Seats	Nylon
5	Stem	316 Stainless Steel
6	Body O-Ring	Buna-N
7	Stem O-Ring	Buna-N
8	Stem Seal	TFE
9	Lock Plate	Stainless Steel
10	Weather Seal	Polyethylene
11	Roll Pin	Stainless Steel
12	Stop Pin	Stainless Steel
13	Drive Nut - 2" Square	Ductile Iron

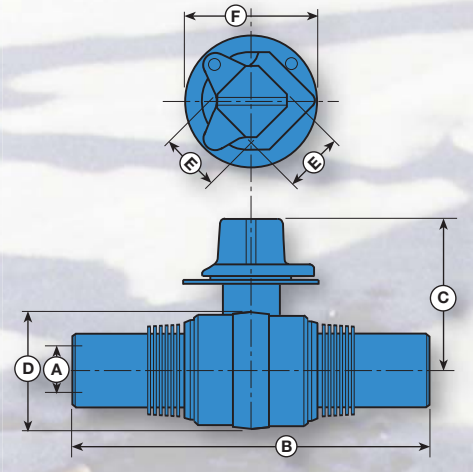

Dimensional Data

SIZE	CATALOG	PORT/A	B	C	D	E	F	LBS.	Cv
2x1.5x2	2R-US13-BW	1.5	11.8	5	3.62	2	4.5	17	148
2x2x2	2F-US13-BW	2	11.8	5.50	4.50	2	4.5	23	-
3x2.5x3	3R-US13-BW	2.5	11.8	6.12	5.25	2	4.5	31	550
3x3x3	3F-US13-BW	3	11.8	6.75	6.25	2	4.5	44	-
4x3x4	4R-US13-BW	3	12.8	6.75	6.25	2	4.5	45	662
4x4x4	4F-US13-BW	4	12.8	7.50	6.87	2	4.5	69	-
6x4x6	6R-US13-BW	4	13.8	7.50	6.87	2	4.5	71	800

BALON

Series US Weld X Weld Carbon Steel

- **Weld End Ball Valve**
- **ANSI Class 300 (740 PSI WP)**
- **2" Through 6"**



- Multi-Seal Seats
- Heat Dissipating Fins for Protection of Seats and Seals During Welding
- Rugged Stainless Steel Lock Plate
- Heavy Duty Forged Steel Components
- Solid Balls for Reduction of Turbulence and Pressure Drop
- Stainless Steel Stem Standard

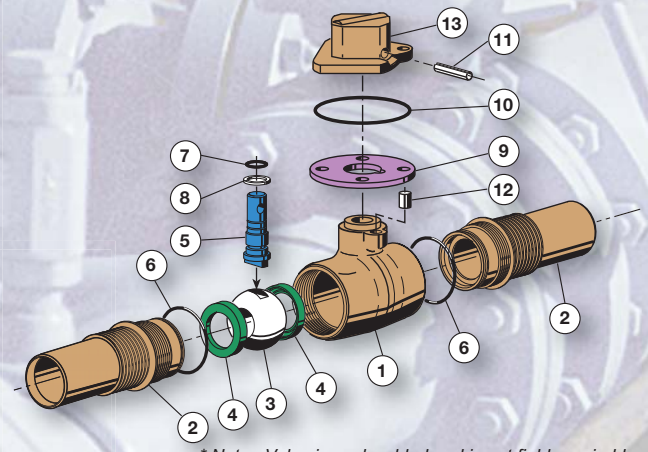

** Note: Valve is seal welded and is not field repairable.*

Material Description

ITEM	PART NAME	MATERIAL (STANDARD)
1	Body	ASTM A105
2	Adapter	ASTM A105
3	Ball	Carbon Steel - Nickel Chrome Plated
4	Seats	Nylon
5	Stem	316 Stainless Steel
6	Body O-Ring	Buna-N
7	Stem O-Ring	Buna-N
8	Stem Seal	TFE
9	Lock Plate	Stainless Steel
10	Weather Seal	Polyethylene
11	Roll Pin	Stainless Steel
12	Stop Pin	Stainless Steel
13	Drive Nut - 2" Square	Ductile Iron

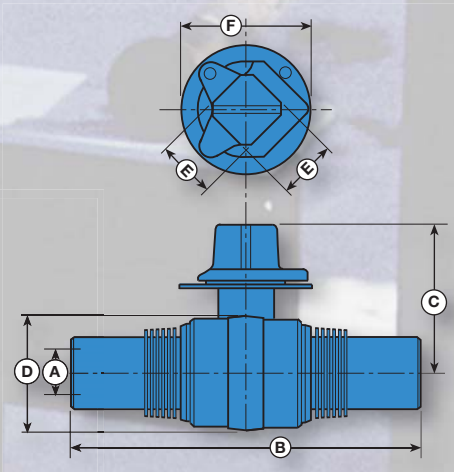

Dimensional Data

SIZE	CATALOG	PORT/A	B	C	D	E	F	LBS.	Cv
2x1.5x2	2R-US33-BW	1.5	11.8	5	3.62	2	4.5	17	148
2x2x2	2F-US33-BW	2	11.8	5.50	4.50	2	4.5	23	-
3x2.5x3	3R-US33-BW	2.5	11.8	6.12	5.25	2	4.5	31	550
3x3x3	3F-US33-BW	3	11.8	6.75	6.25	2	4.5	44	-
4x3x4	4R-US33-BW	3	12.8	6.75	6.25	2	4.5	45	662
4x4x4	4F-US33-BW	4	12.8	7.50	6.87	2	4.5	69	-
6x4x6	6R-US33-BW	4	13.8	7.50	6.87	2	4.5	71	800



- Fire Safe Design
- Maintenance Free Sealing

Series S Ductile Iron

- **Lever Operated Ball Valve**
- **To 2000 PSI WP**
- **1" Through 4"**
- **Threaded Body Construction**

- High Grade Ductile Iron with Better Corrosion Resistance and Greater Yield Strength
- Multi-Seal Seats
- NACE Valves Include 316 Stainless Steel Ball and Stem
- Rugged Locking Device Standard

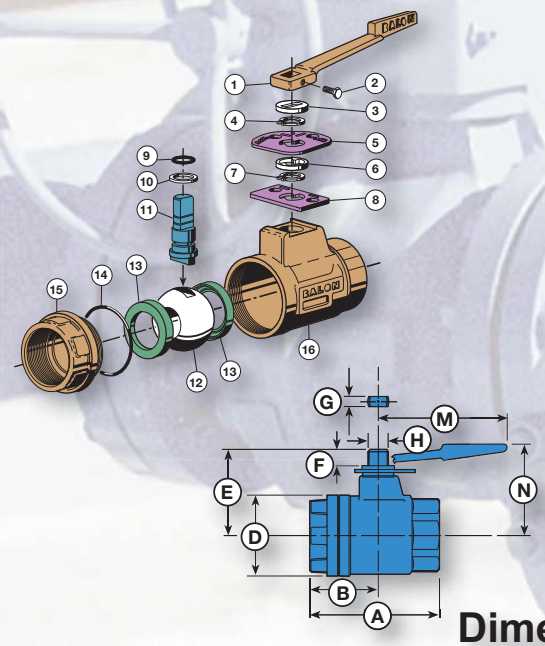

Material Description

ITEM	PART NAME	MATERIAL (STANDARD)	MATERIAL (NACE)
1	Handle*	Ductile Iron	Ductile Iron
2	Handle Bolt	Standard Hex Bolt	Standard Hex Bolt
3	Weather Guard	Polyethylene	Polyethylene
4	Lock Plate Retainer	Carbon Spring Steel	Carbon Spring Steel
5	Lock Plate	Carbon Steel	Carbon Steel
6	Dust Cover	Polyethylene	Polyethylene
7	Stop Plate Retainer	Carbon Spring Steel	Carbon Spring Steel
8	Stop Plate	Carbon Steel	Carbon Steel
9	Stem O-Ring	Buna-N	Fluorocarbon
10	Stem Seal	TFE	TFE
11	Stem	Carbon Steel	316 Stainless Steel
12	Ball	Carbon Steel Nickel Chrome Plated	316 Stainless Steel
13	Ball Seat	Nylon (TFE Optional)	Nylon (TFE Optional)
14	Body O-Ring	Buna-N	Fluorocarbon
15	End Adapter	ASTM A395 Class 60-40-18 Fully Annealed	ASTM A395 Class 60-40-18 Fully Annealed
16	Body	ASTM A395 Class 60-40-18 Fully Annealed	ASTM A395 Class 60-40-18 Fully Annealed

** Balon valves are designed to be operated with a standard open-end wrench. Handle is optional.*

Dimensional Data

SIZE	CATALOG NUMBER STANDARD TRIM CARBON STEEL BALL & STEM	CATALOG NUMBER NACE TRIM 316 SS BALL & STEM	PORT	WP	A	B	D	E	F	G	H	M	N	LBS.	HANDLE	Cv
1x1x1	1F-S42-SE	1F-S42N-SE	1	1000	3.87	1.93	2.25	2.37	.50	.340	.685	4.37	2	3	P-333-CS	-
1x1x1	1F-S62-SE	1F-S62N-SE	1	1500	3.87	1.93	2.25	2.37	.50	.340	.685	4.37	2	3	P-333-CS	-
1x1x1	1F-S92-SE	1F-S92N-SE	1	2000	4	2	2.50	2.37	.50	.340	.685	4.37	2	4	P-333-CS	-
2x1.5x2	2R-S32-SE	2R-S32N-SE	1.5	750	5.25	2.62	3.37	3.62	.62	.434	.873	7.25	5	8	P-4128-DI	125
2x1.5x2	2R-S42-SE	2R-S42N-SE	1.5	1000	5.25	2.62	3.37	3.62	.75	.434	.873	7.25	5	8	P-4128-DI	125
2x1.5x2	2R-S62-SE	2R-S62N-SE	1.5	1500	5.25	2.62	3.37	3.62	.75	.434	.873	7.25	5	8.5	P-4128-DI	125
2x1.5x2	2R-S92-SE	2R-S92N-SE	1.5	2000	5.50	2.75	3.75	3.62	.75	.434	.873	7.25	5	10	P-4128-DI	125
2x2x2	2F-S32-SE	2F-S32N-SE	2	750	5.75	2.87	4.25	4.37	.75	.497	.998	10.25	5.37	12	P-4129-DI	-
2x2x2	2F-S42-SE	2F-S42N-SE	2	1000	5.75	2.87	4.25	4.37	.75	.497	.998	10.25	5.37	13	P-4129-DI	-
2x2x2	2F-S62-SE	2F-S62N-SE	2	1500	6	3	4.75	4.37	.75	.497	.998	10.25	5.37	15	P-4129-DI	-
2x2x2	2F-S92-SE	2F-S92N-SE	2	2000	6	3	4.75	4.37	.75	.497	.998	10.25	5.37	16	P-4129-DI	-
3x2x3	3R-S32-SE	3R-S32N-SE	2	750	7.25	3.50	4.50	4.37	.75	.497	.998	10.25	5.37	17.8	P-4129-DI	180
3x2x3	3R-S62-SE	3R-S62N-SE	2	1500	7.25	3.62	5	4.37	.75	.497	.998	10.25	5.37	22	P-4129-DI	180
3x2.5x3*	3R-S42-SE	3R-S42N-SE	2.5	1000	7.62	3.93	5.25	5.25	1.06	.622	1.248	16	5.75	24	P-4126-DI	400
3x3x3	3F-S32-SE	3F-S32N-SE	3	750	8	4	6	5.75	.87	.747	1.373	20	6.75	33	P-4127-DI	-
3x3x3	3F-S42-SE	3F-S42N-SE	3	1000	8.75	4.37	6	5.75	.87	.747	1.373	20	6.75	33	P-4127-DI	-
4x3x4	4R-S32-SE	4R-S32N-SE	3	750	8.75	4.37	6	5.75	.87	.747	1.373	20	6.75	36	P-4127-DI	525
4x3x4	4R-S42-SE	4R-S42N-SE	3	1000	8.75	4.37	6	5.75	.87	.747	1.373	20	6.75	35	P-4127-DI	525
4x4x4	4F-S22-SE	4F-S22N-SE	4	500	9.37	4.68	7.50	6.37	1.06	.747	1.373	20	7.37	49	P-4127-DI	-

** This reduced port valve has a 2.5" bore for increased flow.*

Series F Ductile Iron

- Lever Operated Ball Valve
- To 2000 PSI WP
- 1" Through 4"
- Bolted Body Construction



- High Grade Ductile Iron with Better Corrosion Resistance and Greater Yield Strength
- Multi-Seal Seats
- Bolted Body Protects Against End Adapter Blowout
- Fire Safe Design
- NACE Valves Include 316 Stainless Steel Ball and Stem
- Rugged Locking Device Standard
- Maintenance Free Sealing

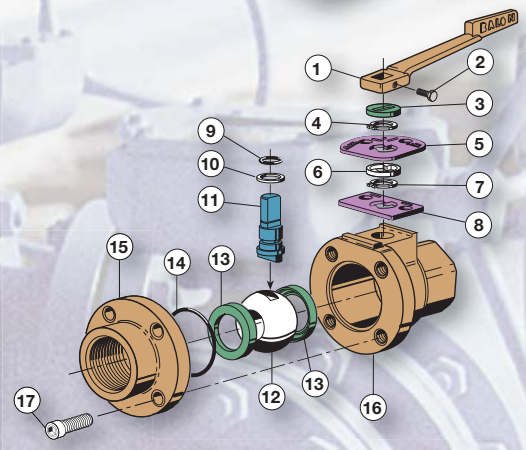

Material Description

ITEM	PART NAME	MATERIAL (STANDARD)	MATERIAL (NACE)
1	Handle*	Ductile Iron	Ductile Iron
2	Handle Bolt	Standard Hex Bolt	Standard Hex Bolt
3	Weather Guard	Polyethylene	Polyethylene
4	Lock Plate Retainer	Carbon Spring Steel	Carbon Spring Steel
5	Lock Plate	Carbon Steel	Carbon Steel
6	Dust Cover	Polyethylene	Polyethylene
7	Stop Plate Retainer	Carbon Spring Steel	Carbon Spring Steel
8	Stop Plate	Carbon Steel	Carbon Steel
9	Stem O-Ring	Buna-N	Fluorocarbon
10	Stem Seal	TFE	TFE
11	Stem	Carbon Steel	316 Stainless Steel
12	Ball	AISI 1018 Nickel Chrome Plated	316 Stainless Steel
13	Ball Seat	Nylon (TFE Optional)	Nylon (TFE Optional)
14	Body O-Ring	Buna-N	Fluorocarbon
15	End Adapter	ASTM A395 Class 60-40-18 Fully Annealed	ASTM A395 Class 60-40-18 Fully Annealed
16	Body	ASTM A395 Class 60-40-18 Fully Annealed	ASTM A395 Class 60-40-18 Fully Annealed
17	Body Bolts	ASTM A-193 B7M	ASTM A193 B7M

** Balon valves are designed to be operated with a standard open-end wrench. Handle is optional.*

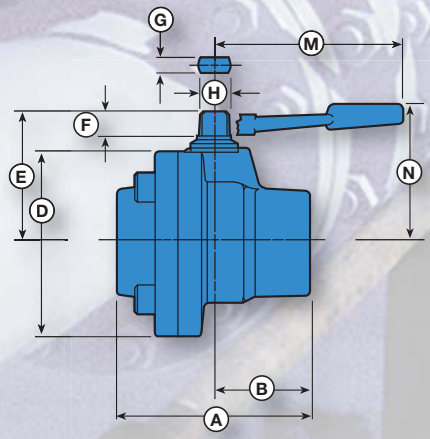

Dimensional Data

SIZE	CATALOG NUMBER		PORT	WP	A	B	D	E	F	G	H	M	N	LBS.	HANDLE	Cv
	STANDARD TRIM CARBON STEEL BALL & STEM	NACE TRIM 316 SS BALL & STEM														
1x1x1	1F-F92-SE	1F-F92N-SE	1	2000	3.87	1.93	3.37	2.37	.50	.340	.685	4.37	2	4	P-333-CS	-
2x1.5x2	2R-F92-SE	2R-F92N-SE	1.5	2000	5.50	2.75	4.87	3.62	.75	.434	.873	7.25	5	12.4	P-4128-DI	125
2x2x2	2F-F62-SE	2F-F62N-SE	2	1500	5.75	2.87	6.12	4.37	.87	.497	.998	10.25	5.37	19	P-4129-DI	-
2x2x2	2F-F92-SE	2F-F92N-SE	2	2000	5.75	2.87	6.12	4.37	.87	.497	.998	10.25	5.37	19	P-4129-DI	-
2.5x2.5x2.5	2.5F-F62-SE	2.5F-F62N-SE	2.5	1500	7	3.50	6.87	5.25	1.06	.622	1.248	16	5.75	27	P-4126-DI	-
3x2x3	3R-F62-SE	3R-F62N-SE	2	1500	7.25	3.62	6.75	4.37	.87	.497	.998	10.25	5.37	26	P-4129-DI	180
3x2x3	3R-F92-SE	3R-F92N-SE	2	2000	7.25	3.62	6.75	4.37	.87	.497	.998	10.25	5.37	26	P-4129-DI	180
3x3x3	3F-F42-SE	3F-F42N-SE	3	1000	8.12	4.06	7.75	5.75	1.06	.747	1.373	20	6.75	40	P-4127-DI	-
4x3x4	4R-F42-SE	4R-F42N-SE	3	1000	8.62	4.31	7.75	5.75	1.06	.747	1.375	20	6.75	42	P-4127-DI	500
4x4x4	4F-F32-SE	4F-F32N-SE	4	750	9.37	4.68	9.25	6.37	1.06	.747	1.375	20	7.37	69	P-4127-DI	-



Series S Ductile Iron

- Lever Operated Ball Valve
- 750 PSI WP
- 2" Through 4"
- Threaded Body Construction

- High Grade Ductile Iron with Better Corrosion Resistance and Greater Yield Strength
- Multi-Seal Seats
- Fire Safe Design
- NACE Valves Include 316 Stainless Steel Ball and Stem
- Rugged Locking Device Standard
- Maintenance Free Sealing

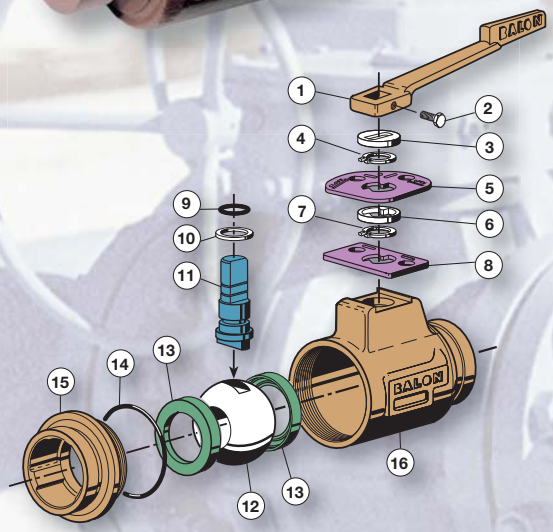

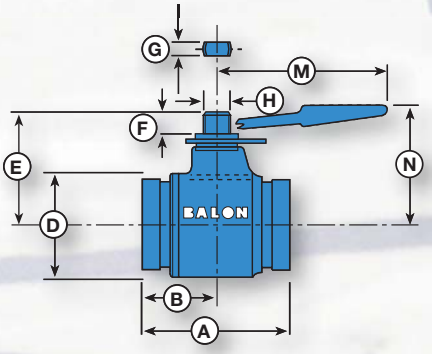

Material Description

ITEM	PART NAME	MATERIAL (STANDARD)	MATERIAL (NACE)
1	Handle*	Ductile Iron	Ductile Iron
2	Handle Bolt	Standard Hex Bolt	Standard Hex Bolt
3	Weather Guard	Polyethylene	Polyethylene
4	Lock Plate Retainer	Carbon Spring Steel	Carbon Spring Steel
5	Lock Plate	Carbon Steel	Carbon Steel
6	Dust Cover	Polyethylene	Polyethylene
7	Stop Plate Retainer	Carbon Spring Steel	Carbon Spring Steel
8	Stop Plate	Carbon Steel	Carbon Steel
9	Stem O-Ring	Buna-N	Fluorocarbon
10	Stem Seal	TFE	TFE
11	Stem	Carbon Steel	316 Stainless Steel
12	Ball	Carbon Steel Nickel Chrome Plated	316 Stainless Steel
13	Ball Seat	Nylon (TFE Optional)	Nylon (TFE Optional)
14	Body O-Ring	Buna-N	Fluorocarbon
15	End Adapter	ASTM A395 Class 60-40-18 Fully Annealed	ASTM A395 Class 60-40-18 Fully Annealed
16	Body	ASTM A395 Class 60-40-18 Fully Annealed	ASTM A395 Class 60-40-18 Fully Annealed

** Balon valves are designed to be operated with a standard open-end wrench. Handle is optional.*

Dimensional Data

SIZE	CATALOG NUMBER		PORT	A	B	D	E	F	G	H	M	N	LBS.	HANDLE	Cv
	STANDARD TRIM CARBON STEEL BALL & STEM	NACE TRIM 316 SS BALL & STEM													
2x1.5x2	2R-S32-GE	2R-S32N-GE	1.5	5.12	2.68	3.37	3.62	.62	.434	.873	7.25	5	7.5	P-4128-DI	140
3x2x3	3R-S32-GE	3R-S32N-GE	2	7.25	3.50	4.50	4.37	.75	.497	.998	10.25	5.37	17	P-4128-DI	200
4x3x4	4R-S32-GE	4R-S32N-GE	3	8.87	4.50	6	5.75	.87	.747	1.373	20	6.75	34	P-4128-DI	550

BALON®

Series F Ductile Iron

- Lever Operated Ball Valve
- ANSI Class 300*
  Raised Face (640 PSI WP)
- 2" Through 4"

** Dimensions meet ANSI standard B16.34; rated working pressure meets ANSI standard B16.42*



- High Grade Ductile Iron with Better Corrosion Resistance and Greater Yield Strength
- Multi-Seal Seats
- Fire Safe Design
- NACE Valves Include 316 Stainless Steel Ball and Stem
- Rugged Locking Device Standard
- Maintenance Free Sealing Improvement Over Lubricated Ball Valves and Cast Iron Plug Valves
- Eliminates High Maintenance of Lubricated Valves

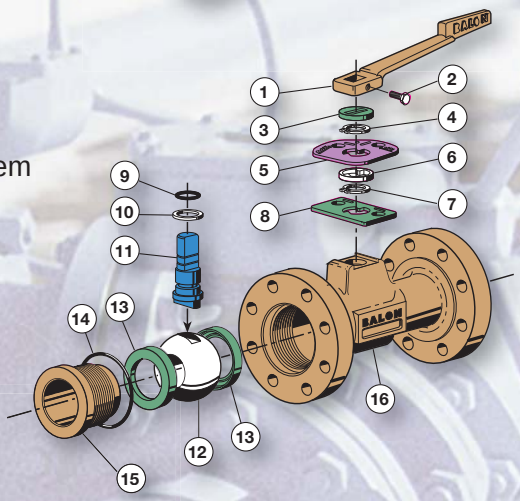

Material Description

ITEM	PART NAME	MATERIAL (STANDARD)	MATERIAL (NACE)
1	Handle*	Ductile Iron	Ductile Iron
2	Handle Bolt	Standard Hex Bolt	Standard Hex Bolt
3	Weather Guard	Polyethylene	Polyethylene
4	Lock Plate Retainer	Carbon Spring Steel	Carbon Spring Steel
5	Lock Plate	Carbon Steel	Carbon Steel
6	Dust Cover	Polyethylene	Polyethylene
7	Stop Plate Retainer	Carbon Spring Steel	Carbon Spring Steel
8	Stop Plate	Carbon Steel	Carbon Steel
9	Stem O-Ring	Buna-N	Fluorocarbon
10	Stem Seal	TFE	TFE
11	Stem	Carbon Steel	316 Stainless Steel
12	Ball	Carbon Steel Nickel Chrome Plated	316 Stainless Steel
13	Ball Seat	Nylon (TFE Optional)	Nylon (TFE Optional)
14	Body O-Ring	Buna-N	Fluorocarbon
15	End Adapter	ASTM A395 Class 60-40-18 Fully Annealed	ASTM A395 Class 60-40-18 Fully Annealed
16	Body	ASTM A395 Class 60-40-18 Fully Annealed	ASTM A395 Class 60-40-18 Fully Annealed

** Balon valves are designed to be operated with a standard open-end wrench. Handle is optional.*

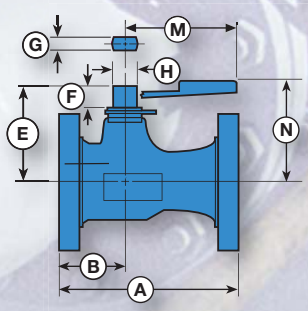

Optimum Flow Direction

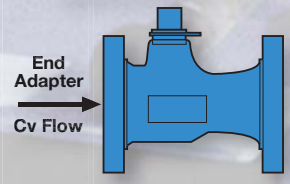

Dimensional Data

SIZE	CATALOG NUMBER		PORT	A	B	E	F	G	H	M	N	LBS.	HANDLE	Cv
	STANDARD TRIM CARBON STEEL BALL & STEM	NACE TRIM 316 SS BALL & STEM												
2x1.5x2	2R-F32	2R-F32N	1.5	8.5	2.75	3.62	.75	.434	.873	7.25	5	21.6	P-4128-DI	125
3x2x3	3R-F32	3R-F32N	2	11.12	3	4.37	.75	.497	.998	10.25	5.37	40	P-4129-DI	200
4x3x4	4R-F32	4R-F32N	3	12	3.37	5.75	.87	.747	1.373	20	6.75	72	P-4127-DI	525



Series F Ductile Iron

- Lever Operated Ball Valve
- ANSI Class 125* • Flat Face (200 PSI WP)
- ANSI Class 150* • Raised Face (250 PSI WP)
- 2" Through 6"

** Dimensions meet ANSI standard B16.34; rated working pressure meets ANSI standard B16.42*

- High Grade Ductile Iron with Better Corrosion Resistance and Greater Yield Strength
- Multi-Seal Seats
- Fire Safe Design
- NACE Valves Include 316 Stainless Steel Ball and Stem
- Rugged Locking Device Standard
- Maintenance Free Sealing Improvement Over Lubricated Ball Valves and Cast Iron Plug Valves
- Eliminates High Maintenance of Lubricated Valves

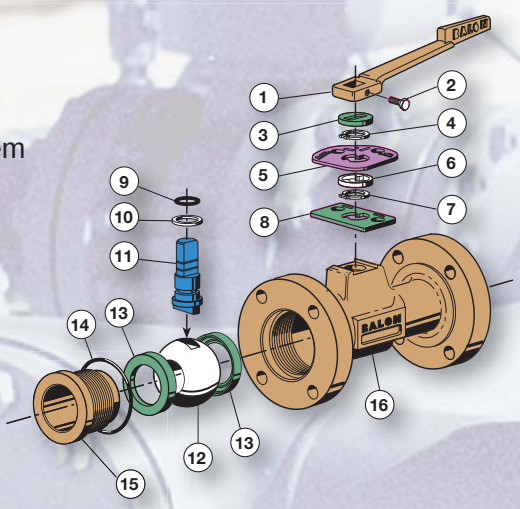

Material Description

ITEM	PART NAME	MATERIAL (STANDARD)	MATERIAL (NACE)
1	Handle*	Ductile Iron	Ductile Iron
2	Handle Bolt	Standard Hex Bolt	Standard Hex Bolt
3	Weather Guard	Polyethylene	Polyethylene
4	Lock Plate Retainer	Carbon Spring Steel	Carbon Spring Steel
5	Lock Plate	Carbon Steel	Carbon Steel
6	Dust Cover	Polyethylene	Polyethylene
7	Stop Plate Retainer	Carbon Spring Steel	Carbon Spring Steel
8	Stop Plate	Carbon Steel	Carbon Steel
9	Stem O-Ring	Buna-N	Fluorocarbon
10	Stem Seal	TFE	TFE
11	Stem	Carbon Steel	316 Stainless Steel
12	Ball	Carbon Steel Nickel Chrome Plated	316 Stainless Steel
13	Ball Seat	Nylon (TFE Optional)	Nylon (TFE Optional)
14	Body O-Ring	Buna-N	Fluorocarbon
15	End Adapter	ASTM A395 Class 60-40-18 Fully Annealed	ASTM A395 Class 60-40-18 Fully Annealed
16	Body	ASTM A395 Class 60-40-18 Fully Annealed	ASTM A395 Class 60-40-18 Fully Annealed

** Balon valves are designed to be operated with a standard open-end wrench. Handle is optional.*

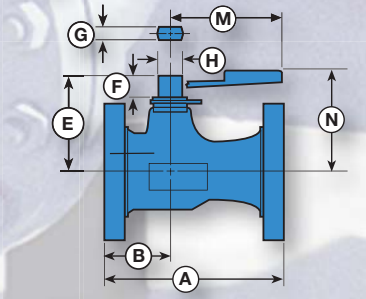

Optimum Flow Direction

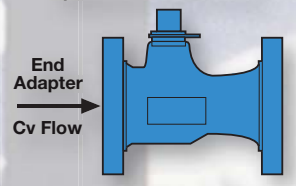

Dimensional Data

SIZE	CATALOG NUMBER STANDARD TRIM CARBON STEEL BALL & STEM	CATALOG NUMBER NACE TRIM 316 SS BALL & STEM	PORT	WP CLASS 125 FLAT FACE	WP CLASS 150 RAISED FACE	A	B	E	F	G	H	M	N	LBS.	HANDLE	Cv
2x1.5x2	2R-F12	2R-F12N	1.5	FF200	RF250	7	2.75	3.62	.75	.434	.873	7.25	5	18	P-4128-DI	125
3x2x3	3R-F12	3R-F12N	2	FF200	RF250	8	3	4.37	.75	.497	.998	10.25	5.37	30	P-4129-DI	200
4x3x4	4R-F12	4R-F12N	3	FF200	RF250	9	3.37	5.75	.87	.747	1.373	20	6.75	53.5	P-4127-DI	525
6x4x6	6R-F12	6R-F12N	4	FF200	RF250	10.50	3.81	6.37	.87	.747	1.373	20	7.37	75	P-4127-DI	800

Series F Ductile Iron



- Lever Operated Ball Valve
- ANSI Class 150* Raised Face (250 PSI WP)
- 2" Through 4"
- Bolted Body Construction

** Dimensions meet ANSI standard B16.34; rated working pressure meets ANSI standard B16.42*

- High Grade Ductile Iron with Better Corrosion Resistance and Greater Yield Strength
- Multi-Seal Seats
- Fire Safe Design
- NACE Valves Include 316 Stainless Steel Ball and Stem
- Rugged Locking Device Standard
- Maintenance Free Sealing Improvement Over Lubricated Ball Valves and Cast Iron Plug Valves
- Eliminates High Maintenance of Lubricated Valves

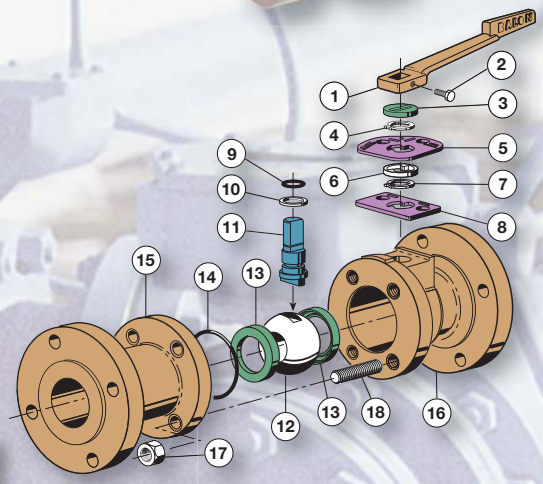

Material Description

ITEM	PART NAME	MATERIAL (STANDARD)	MATERIAL (NACE)
1	Handle*	Ductile Iron	Ductile Iron
2	Handle Bolt	Standard Hex Bolt	Standard Hex Bolt
3	Weather Guard	Polyethylene	Polyethylene
4	Lock Plate Retainer	Carbon Spring Steel	Carbon Spring Steel
5	Lock Plate	Carbon Steel	Carbon Steel
6	Dust Cover	Polyethylene	Polyethylene
7	Stop Plate Retainer	Carbon Spring Steel	Carbon Spring Steel
8	Stop Plate	Carbon Steel	Carbon Steel
9	Stem O-Ring	Buna-N	Fluorocarbon
10	Stem Seal	TFE	TFE
11	Stem	Carbon Steel	316 Stainless Steel
12	Ball	Carbon Steel Nickel Chrome Plated	316 Stainless Steel
13	Ball Seat	Nylon (TFE Optional)	Nylon (TFE Optional)
14	Body O-Ring	Buna-N	Fluorocarbon
15	End Adapter	ASTM A395 Class 60-40-18 Fully Annealed	ASTM A395 Class 60-40-18 Fully Annealed
16	Body	ASTM A395 Class 60-40-18 Fully Annealed	ASTM A395 Class 60-40-18 Fully Annealed
17	Nuts	ASTM A194 2H	ASTM A194 2HM
18	Body Bolts	ASTM A193 B7	ASTM A193 B7M

** Balon valves are designed to be operated with a standard open-end wrench. Handle is optional.*

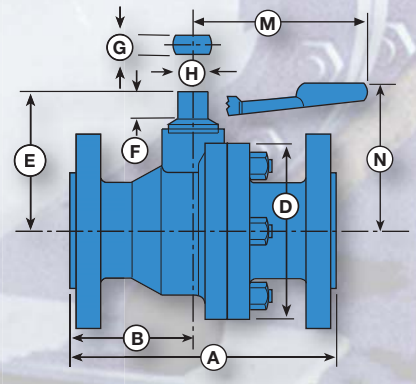

Dimensional Data

SIZE	CATALOG NUMBER		PORT	A	B	D	E	F	G	H	M	N	LBS.	HANDLE	Cv
	STANDARD TRIM CARBON STEEL BALL & STEM	NACE TRIM 316 SS BALL & STEM													
2x2x2	2F-F12	2F-F12N	2	7	2.75	6	4.37	.87	.497	.998	10.25	5.37	28	P-4129-DI	-
3x3x3	3F-F12	3F-F12N	3	8	3.56	7.50	5.75	1.06	.747	1.373	20	6.75	54	P-4127-DI	-
4x4x4	4F-F12	4F-F12N	4	9	4.06	9	6.37	1.06	.747	1.373	20	7.37	80	P-4127-DI	-



Series S Aluminum Bronze

- Lever Operated Ball Valve
- To 1000 PSI WP
- 2" Through 4"
- Threaded Body Construction

- Enhanced Protection Against CO_2 and Saltwater Corrosion
- NACE Standard
- Multi-Seal Seats
- Fire Safe Design
- Minimizes Risk of Galling Associated with Stainless Steel
- 316 Stainless Steel Ball and Stem
- Rugged Locking Device Standard
- Maintenance Free Sealing

Material Description

ITEM	PART NAME	MATERIAL NACE (STANDARD)
1	Handle*	Ductile Iron
2	Handle Bolt	Standard Hex Bolt
3	Weather Guard	Polyethylene
4	Lock Plate Retainer	Stainless Steel
5	Lock Plate	Stainless Steel
6	Dust Cover	Polyethylene
7	Stop Plate Retainer	Stainless Steel
8	Stop Plate	Stainless Steel
9	Stem O-Ring	Fluorocarbon
10	Stem Seal	TFE
11	Stem	316 Stainless Steel
12	Ball	316 Stainless Steel
13	Ball Seat	Nylon (TFE Optional)
14	Body O-Ring	Fluorocarbon
15	End Adapter	ASTM B148-9D (955)
16	Body	ASTM B148-9D (955)

** Balon valves are designed to be operated with a standard open-end wrench. Handle is optional.*

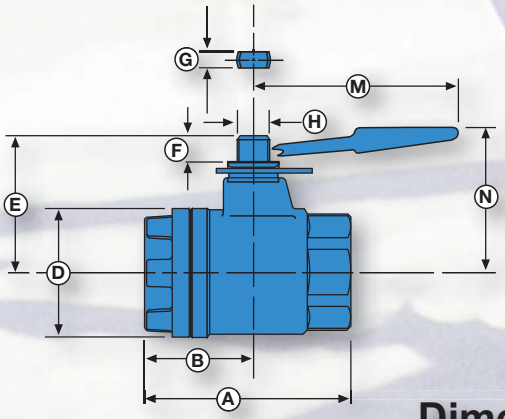

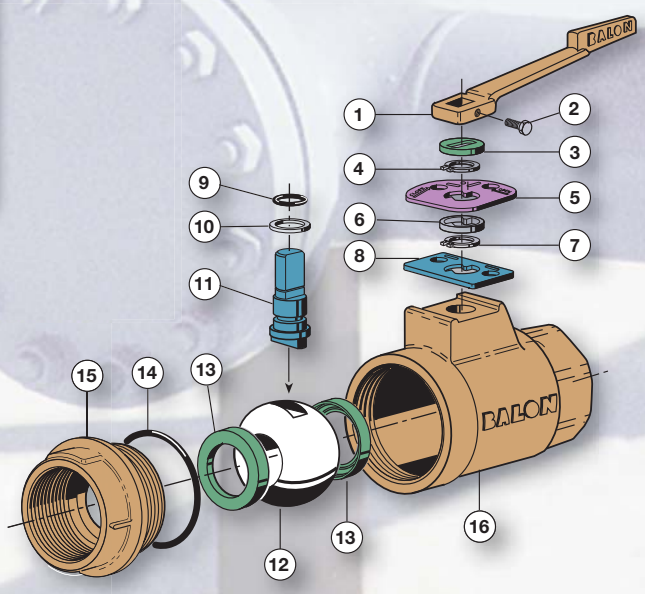

Dimensional Data

SIZE	CATALOG	PORT	WP	A	B	D	E	F	G	H	M	N	LBS.	HANDLE	Cv
2x1.5x2	2R-S44N-SE	1.5	1000	5.25	2.66	3.38	3.66	.75	.434	.873	7.25	5	7.5	P-4128-DI	125
2x2x2	2F-S44N-SE	2	1000	5.75	2.88	4.25	4.38	.75	.497	.998	10.25	5.38	12	P-4129-DI	-
3x2x3	3R-S44N-SE	2	1000	7.25	3.50	4.50	4.38	.75	.497	.998	10.25	5.38	17	P-4129-DI	180
3x3x3	3F-S44N-SE	3	1000	8.75	4.38	6	5.75	.88	.747	1.373	20	6.75	31	P-4127-DI	-
4x3x4	4R-S44N-SE	3	1000	8.75	4.38	6	5.75	.88	.747	1.373	20	6.75	36	P-4127-DI	525
4x4x4	4F-S34N-SE	4	750	9.38	4.69	7	6.38	1.06	.747	1.373	20	7.38	52	P-4127-DI	-

Series F Aluminum Bronze

- Lever Operated Ball Valve
- To 3000 PSI WP
- 1" Through 2"
- Bolted Body Construction



- Enhanced Protection Against CO_2 and Saltwater Corrosion
- NACE Standard
- Minimizes Risk of Galling Associated with Stainless Steel
- Multi-Seal Seats
- Fire Safe Design
- Rugged Locking Device Standard
- Maintenance Free Sealing

Material Description

ITEM	PART NAME	MATERIAL NACE (STANDARD)
1	Handle*	Ductile Iron
2	Handle Bolt	Standard Hex Bolt
3	Weather Guard	Polyethylene
4	Lock Plate Retainer	Stainless Steel
5	Lock Plate	Stainless Steel
6	Dust Cover	Polyethylene
7	Stop Plate Retainer	Stainless Steel
8	Stop Plate	Stainless Steel
9	Stem O-Ring	Fluorocarbon
10	Stem Seal	TFE
11	Stem	316 Stainless Steel
12	Ball	316 Stainless Steel
13	Ball Seat	Nylon (TFE Optional)
14	Body O-Ring	Fluorocarbon
15	End Adapter	ASTM B148-9D (955)
16	Body	ASTM B148-9D (955)
17	Body Stud Bolts	ASTM A193 B7M

** Balon valves are designed to be operated with a standard open-end wrench. Handle is optional.*

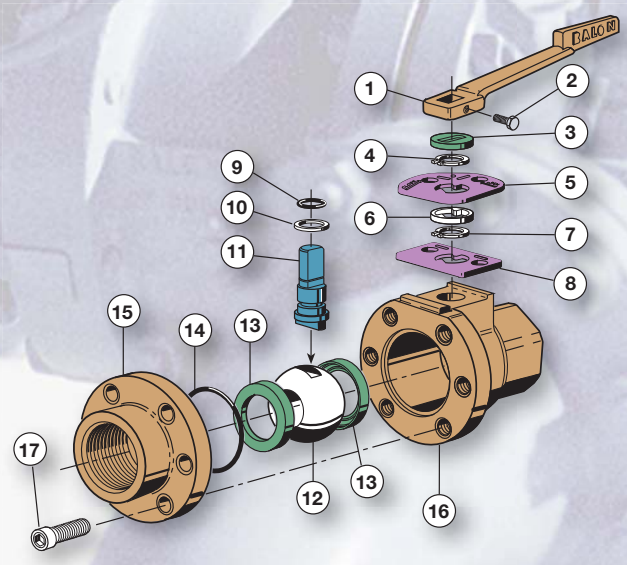

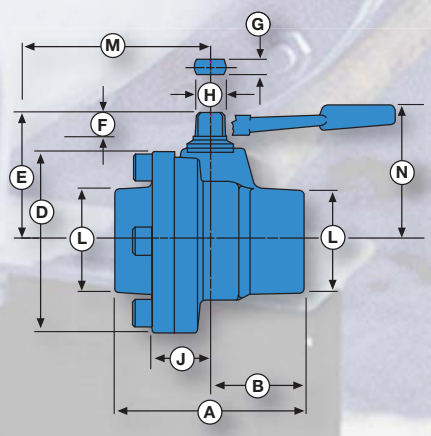

Dimensional Data

SIZE	CATALOG	PORT	WP*	A	B	D	E	F	G	H	J	L	M	N	LBS.	HANDLE	Cv
1x1x1	1F-F04N-SE	1	3000	3.87	1.93	3.37	2.37	.50	.340	.685	1.12	1.87	4.37	2	4	P-333-CS	-
2x1.5x2	2R-F04N-SE	1.5	3000	5.50	2.75	4.87	3.62	.75	.434	.873	1.62	3	7.25	5	11.5	P-4128-DI	125
2x2x2	2F-F94N-SE	2	2000	5.75	2.87	6.12	4.37	.87	.497	.998	2	3.12	10.25	5.37	19	P-4129-DI	-



Series S Aluminum Bronze

- Lever Operated Ball Valve
- 1000 PSI WP
- 2" Through 4"
- Threaded Body Construction

- Enhanced Protection Against CO_2 and Saltwater Corrosion
- Multi-Seal Seats
- Fire Safe Design
- NACE Standard
- Rugged Locking Device Standard
- Maintenance Free Sealing

Material Description

ITEM	PART NAME	MATERIAL NACE (STANDARD)
1	Handle*	Ductile Iron
2	Handle Bolt	Standard Hex Bolt
3	Weather Guard	Polyethylene
4	Lock Plate Retainer	Stainless Steel
5	Lock Plate	Stainless Steel
6	Dust Cover	Polyethylene
7	Stop Plate Retainer	Stainless Steel
8	Stop Plate	Stainless Steel
9	Stem O-Ring	Fluorocarbon
10	Stem Seal	TFE
11	Stem	316 Stainless Steel
12	Ball	316 Stainless Steel
13	Ball Seat	Nylon (TFE Optional)
14	Body O-Ring	Fluorocarbon
15	End Adapter	ASTM B148-9D (955)
16	Body	ASTM B148-9D (955)

** Balon valves are designed to be operated with a standard open-end wrench. Handle is optional.*

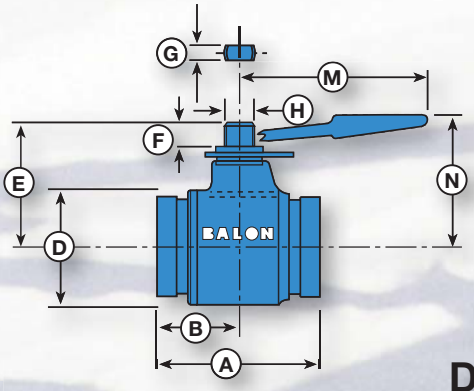

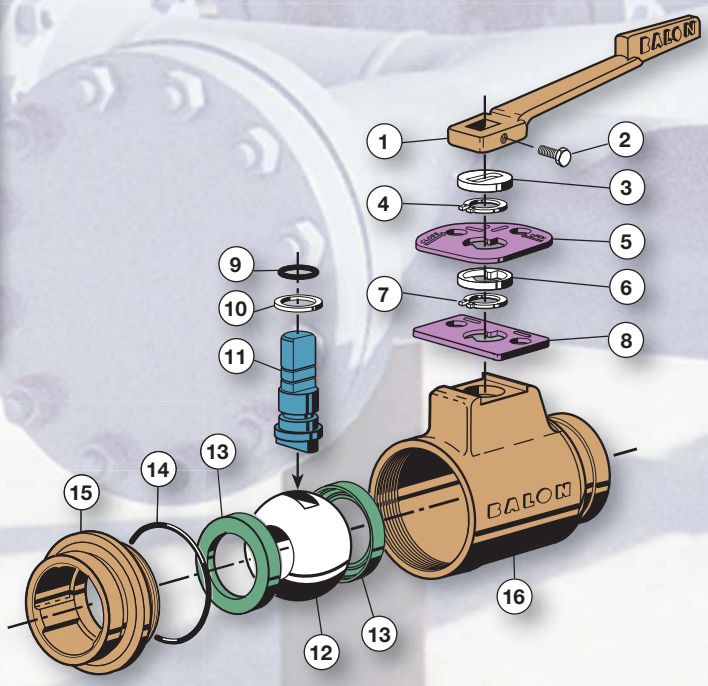

Dimensional Data

SIZE	CATALOG NUMBER NACE TRIM 316 SS BALL & STEM	PORT	A	B	D	E	F	G	H	M	N	LBS.	HANDLE	Cv
2x1.5x2	2R-S44N-GE	1.5	5.12	2.68	3.37	3.62	.62	.434	.873	7.25	5	7.5	P-4128-DI	140
3x2x3	3R-S44N-GE	2	7.25	3.50	4.50	4.37	.75	.497	.998	10.25	5.37	16	P-4129-DI	200
4x3x4	4R-S44N-GE	3	8.87	4.50	6	5.75	.87	.747	1.373	20	6.75	34	P-4127-DI	550

Series F Aluminum Bronze

- Lever Operated Ball Valve
- 2000 PSI WP
- 2"
- Bolted Body Construction



- Enhanced Protection Against CO_2 and Saltwater Corrosion
- Multi-Seal Seats
- Fire Safe Design
- NACE Standard
- Rugged Locking Device Standard
- Maintenance Free Sealing

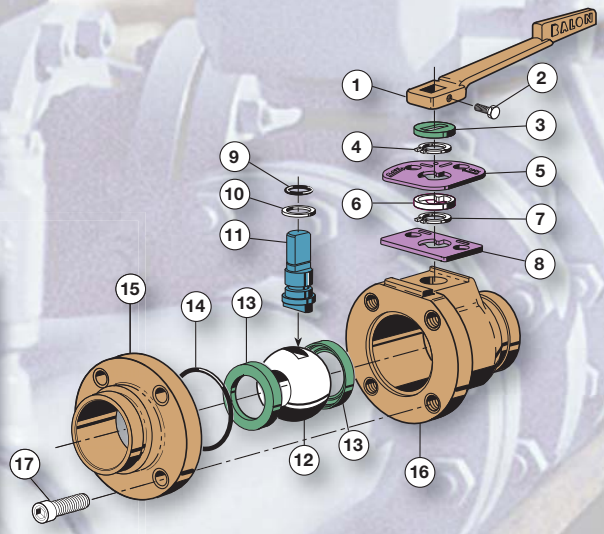

Material Description

ITEM	PART NAME	MATERIAL NACE (STANDARD)
1	Handle*	Ductile Iron
2	Handle Bolt	Standard Hex Bolt
3	Weather Guard	Polyethylene
4	Lock Plate Retainer	Stainless Steel
5	Lock Plate	Stainless Steel
6	Dust Cover	Polyethylene
7	Stop Plate Retainer	Stainless Steel
8	Stop Plate	Stainless Steel
9	Stem O-Ring	Fluorocarbon
10	Stem Seal	TFE
11	Stem	316 Stainless Steel
12	Ball	316 Stainless Steel
13	Ball Seat	Nylon (TFE Optional)
14	Body O-Ring	Fluorocarbon
15	End Adapter	ASTM B148-9D (955)
16	Body	ASTM B148-9D (955)
17	Body Bolts	ASTM A193 B7M

** Balon valves are designed to be operated with a standard open-end wrench. Handle is optional.*

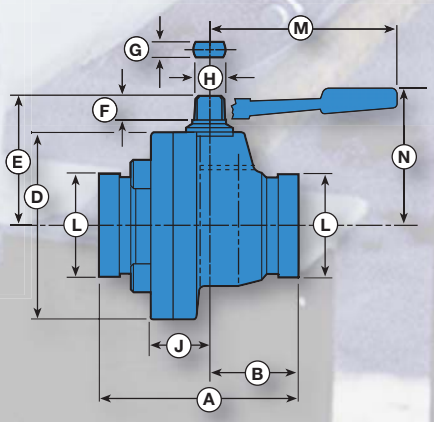

Dimensional Data

SIZE	CATALOG	PORT	A	B	D	E	F	G	H	J	L	M	N	LBS.	HANDLE	Cv
2x1.5x2	2R-F94N-GE	1.5	5.5	2.75	4.87	3.62	.75	.497	.873	1.62	2.37	7.25	5	11.5	P-4128-DI	140

Series LS Threaded End Stainless Steel



- Lever Operated Ball Valve
- To 3000 PSI WP
- ¼" Through 1"
- Threaded Body Construction

- Multi-Seal Seats
- NACE Standard
- Exclusive Patented Design Inhibits Loosening of End Adapter
- All Metal Components Made of Stainless Steel
- Maintenance Free Sealing

Material Description

ITEM	PART NAME	MATERIAL (STANDARD)
1	Weather Guard	Polyethylene
2	Stem Nut	Stainless Steel
3	Spacer	Stainless Steel
4	Lock Plate	Stainless Steel
5	Handle*	Stainless Steel
6	Stem Washer	Acetal
7	Stop Pin	Stainless Steel
8	Stem O-Ring	Fluorocarbon
9	Stem Seal	TFE
10	Stem	316 Stainless Steel
11	Body	316 Stainless Steel
12	Ball Seat	Nylon (TFE Optional)
13	Ball	316 Stainless Steel
14	Body Seal	Fluorocarbon
15	Adapter	316 Stainless Steel

** Handle and locking device standard on all Series LS Ball Valves.*

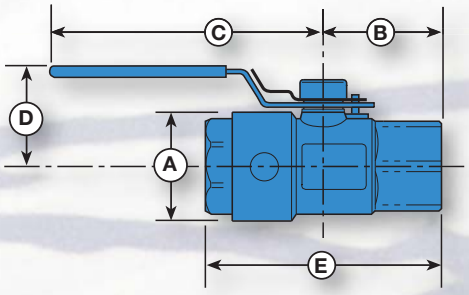

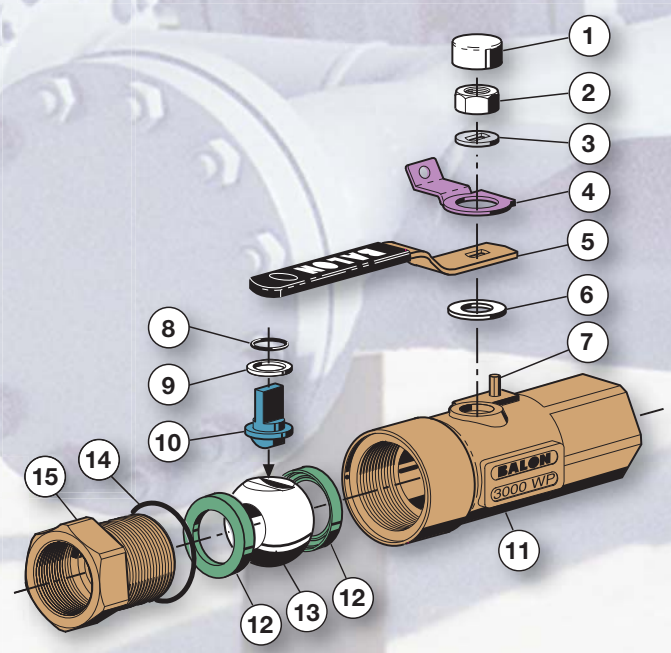

Dimensional Data

SIZE	CATALOG	PORT	WP*	A	B	C	D	E	LBS.	Cv
.25x.37x.25	LS-02592	.37	3000	1.37	1.12	3.50	1.62	2.62	.91	-
.50x.37x.50	LS-05561	.37	2000	1.37	1.12	3.50	1.62	2.50	.75	6
.50x.37x.50	LS-05591	.37	3000	1.37	1.43	3.50	1.62	3	1	6
.75x.75x.75	LS-07592	.75	3000	2.12	1.75	4.87	2.25	3.75	2.5	-
1x.75x1	LS-10561	.75	2000	2.12	1.87	4.87	2.25	3.75	2	30
1x.75x1	LS-10591	.75	3000	2.12	2	4.87	2.25	4.12	2.5	30

Series S Threaded End Stainless Steel

- Lever Operated Ball Valve
- 3000 PSI WP
- 2"
- Threaded Body Construction



- Multi-Seal Seats
- Fire Safe Design
- 316 Stainless Steel Ball and Stem Standard
- Rugged Locking Device Standard
- Maintenance Free Sealing

Material Description

ITEM	PART NAME	MATERIAL NACE (STANDARD)
1	Handle*	Ductile Iron
2	Handle Bolt	Standard Hex Bolt
3	Weather Guard	Polyethylene
4	Lock Plate Retainer	Stainless Steel
5	Lock Plate	Stainless Steel
6	Dust Cover	Polyethylene
7	Stop Plate Retainer	Stainless Steel
8	Stop Plate	Stainless Steel
9	Stem O-Ring	Fluorocarbon
10	Stem Seal	TFE
11	Stem	316 Stainless Steel
12	Ball	316 Stainless Steel
13	Ball Seat	Nylon (TFE Optional)
14	Body O-Ring	Fluorocarbon
15	End Adapter	316 Stainless Steel
16	Body	316 Stainless Steel

** Balon valves are designed to be operated with a standard open-end wrench. Handle is optional.*

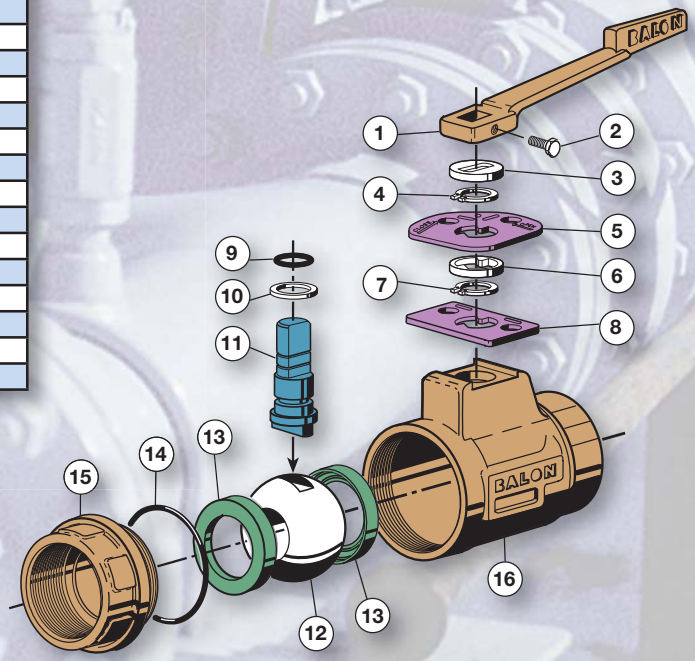

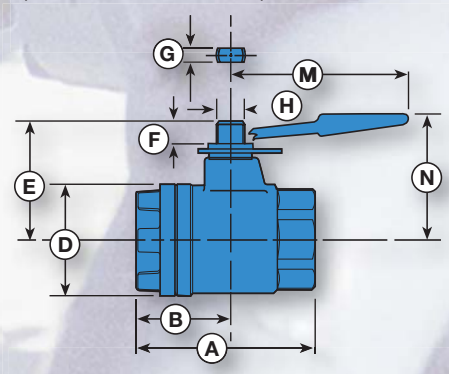

Dimensional Data

SIZE	CATALOG NUMBER NACE TRIM 316 SS BALL & STEM	PORT	A	B	D	E	F	G	H	M	N	LBS.	HANDLE	Cv
2x1.5x2	2R-S05N-SE	1.5	5.5	2.75	4.25	3.62	.75	.434	.873	7.25	5	14	P-4128-DI	125
2x2x2	2F-S05N-SE	2	6	3.12	4.87	4.37	.75	.497	.998	10.25	5.37	20	P-4129-DI	-

Actuator Sizing

Because the actuator sizing is so critical to the proper operation and life of a ball valve, we have chosen not to publish torque values. Misinterpretation of manual torque data can lead to undersizing, while misinterpretation of factored torque values can mislead as to ease of manual operation.

Furthermore, types of service conditions can significantly alter standard torque requirements. Balon valves facilitate ease of use, and we will be glad to provide sizing information upon request through one of our field representatives or from our Oklahoma City headquarters.

Standards and Specifications

Balon utilizes the following standards in the manufacture of ball valves. It should be noted that not all styles, configurations and materials used in Balon valves meet all of these standards in their entirety.

The user therefore, should specify a given standard if there is a need to assure total compliance with a given standard.

API. . . . . (American Petroleum Institute)
API-6FA. . . . . Fire Test For Resilient-Seated Valves
API 5B . . . . . Inspection Of Threads
API-6D. . . . . Pipeline Valves, End Closures, Connectors And Swivels.
API-Q1. . . . . Quality Programs
API-594 . . . . . Wafer Check Valves
ANSI . . . . . (American National Standard Institute)
ANSI-B. . . . . 16.5 - Pipe Flanges And Flanged Fittings
ANSI-B. . . . . 16.10 - Face-To-Face End-To-End Dimensions
ANSI-B. . . . . 16.42 Ductile Iron Pipe Flanges And Flanged Fittings
ANSI-B. . . . . 16.34 - Valves - Flanged End, ... Threaded And Butt Weld
ANSI-B. . . . . (B1.20.1) - Pipe Threads General Purpose (Inch)
MSS. . . . . (Manufacturers Standardization Society)
MSS-SP6. . . . . Standard Finishes For Contact Faces Of Pipe Flanges And Connection End Flanges Of Valves And Fittings
MSS-SP25. . . . . Standard Marking System For Valves, Fittings, Flanges And Fittings
MSS-SP72. . . . . Ball Valves With Flanged Or Butt Welding Ends For General Service
MSS-SP82. . . . . Valve Pressure Test Methods
MSS-SP84. . . . . Steel Valves - Socket Welding And Threaded Ends
NACE MR-01-75. . .Sulfide Stress Cracking, Resistant Metallic Material For Oil Field Equipment (NACE Materials Are Optional And Must Be Specified On Purchase Orders)

Application Guide

This Balon “Media and Application Guide” provides assistance to the engineer in selecting the best material for a particular service. The final selection of materials however, requires the judgement of the user because it may be necessary to sacrifice certain physical properties of a material to take better advantage of others.

Information contained in the following chart is believed to be reliable and is intended to be used by trained personnel at their own discretion and risk. Due to many factors which affect the rate of corrosion, we suggest that final acceptability be established by test under actual operating conditions.

Ratings are based on media at ambient temperatures except as noted.

E - Excellent G - Good F - Fair U - Unsatisfactory BLANK - Insufficient Data

	VALVE MATERIAL			SEAT AND SEAL MATERIAL			
Media *	Carbon Steel	Ductile Iron	316 SS	Buna-N	Viton	Nylon	TFE
Air	E	E	E	E	E	E	E
Alcohols	G	G	E	E	E	F	E
Amines (conc.)	E	E	E	U	U	E	E
Ammonia, Anhydrous	E	G	E	F	U	E	E
- Aqueous	E	E	E	F	U	G	E
- Solutions	G	G	E	F	U	G	E
Benzene or Benzol	G	G	E	U	E	E	E
Brines	F	F	G	E	E	E	E
Bunker Oils (Fuels)	G	G	E	E	E	E	E
Butane	E	E	E	E	E	E	E
Carbolic Acid (Phenol)	U	U	G	U	G	U	E
Carbon Dioxide, Dry	E	F	E	G	G	G	E
Carbonic Acid	U	U	G	G	E	E	E
Carbon Tetrachloride, Dry	F	F	E	U	E	E	E
-Wet	U	U	G	U	E	E	E
Carbonated Water	G	G	E	E	E	G	E
Crude Oil, Sweet	E	E	E	E	E	E	E
- Sour	G	G	E	F	G	G	E
Diethylamine (DEA)	E	E	E	U	U	E	E
Diesel Fuels	E	E	E	E	E	E	E
Dowtherm A and E	G	G	E	U	E	E	E
Drilling Mud	G	G	E	E	E	E	E
Ethane	E	E	E	E	E	E	E
Ethylene	E	E	E	U	E	E	E
Ethylene Glycol	G	G	G	E	E	G	E
Fuel Oil	G	G	E	E	E	E	E
Gas, Manufactured	G	G	G	E	E	E	E
- Natural	G	G	E	E	E	E	E
- Odorizers	G	G	E	U	E	G	E
- Sour	G	G	E	F	E	E	E
Gasoline, Leaded	E	G	E	G	E	E	E
- Unleaded	E	G	E	F	E	E	E
- Aviation	E	G	E	G	E	E	E
- Motor	E	G	E	F	E	E	E
Glycols	G	G	G	E	E	G	E
Heptane	E	E	E	E	E	E	E
Hexane	E	E	E	E	E	E	E
Hydraulic Oil - Petroleum Base	E	E	E	E	E	E	E
- Phosphate Base	E	E	E	U	E	E	E
Hydrocloric Acid -Air Free	U	U	U	F	E	U	E
Hydrofloric Acid	U	U	U	U	U	U	F
Hydrogen Gas	G	G	E	E	E	E	E
Hydrogen Sulfide, Dry(Conc.)	G	G	E	F	F	E	E
Wet(Conc.)	F	U	G	U	F	E	E
Illuminating Gas	E	E	E	E	E		E
Iso-Octane	E	G	E	E	E	E	E

	VALVE MATERIAL			SEAT AND SEAL MATERIAL			
Media *	Carbon Steel	Ductile Iron	316 SS	Buna-N	Viton	Nylon	TFE
Isopropyl Alcohol	G	G	G	G	E	G	E
- Ether	E	G	E	G	U	E	E
JP-4 Fuel	E	E	E	E	E	E	E
JP-5 Fuel	E	E	E	E	E	E	E
JP-6 Fuel	E	E	E	E	E	E	E
Kerosene	G	G	E	E	E	E	E
Liquified Pet. Gas (LPG)	G	G	G	E	E	E	E
Lubricating Oil	E	E	E	E	E	E	E
Mercaptan (Conc.)	G	G	E	F	E	G	E
Methane	E	E	E	E	E	E	E
Muratic Acid	U	U	U	G	E	U	E
Naphtha	G	G	E	G	E	E	E
Naphthalene	E	G	E	U	E	E	E
Natural Gas	E	E	E	E	E	E	E
Nitrogen	E	E	E	E	E	E	E
Oil, Animal	E	E	E	E	E		E
- Cottonseed	F	F	G	E	E	E	E
- Fish	G	G	E	E	E	E	E
- Fuel	G	G	E	E	E	E	E
- Lube	E	E	E	E	E	E	E
- Mineral	G	G	E	E	E	E	E
- Petroleum, Refined	E	G	E	E	E	E	E
Oil-Water Mixtures	E	E	E	E	E	E	E
Parafin	G	G	E	G	E	E	E
Pentane	G	G	E	U	E	E	E
Producer Gas	G	G	G	E	E	E	E
Propane	E	E	E	E	E	E	E
Propyl Alcohol	E	E	E	E	E	E	E
Propylene Glycol	E	E	E	E	E	F	E
Sea Water	U	U	E	E	E	E	E
Sodium Acetate	G	G	G	G	U	G	E
- Hydroxide, Cold, 20%	E	E	E	G	G	E	E
- Hydroxide, Hot, 20%	F	F	G	G	G	G	E
- Hydroxide, Cold, 50%	G	G	G	F	F	F	F
- Hydroxide, Hot, 50%	G	G	G	U	F	U	F
- Hydroxide, Cold, 70%	F	F	G	U	F		F
- Hydroxide, Hot, 70%	G	F	G	U	F		U
Steam (212˚ F)	E	E	E	U	U	U	E
Stoddard Solvent	G	G	G	E	E	G	E
Sulfur Dioxide (Dry)	G	G	E	U	U	F	E
Sulfuric Acid, 0-7%	F	F	G	F	E	G	E
- 20%	U	U	F	U	E	U	E
- 50%	U	U	U	U	E	U	E
- 100%	U	U	U	U	E	U	E
Toluene or Toluol	E	E	E	U	E	E	E
Water, Distilled, Aerated	U	U	E	E	G	E	E
- Fresh	F	F	E	E	E	E	E
- Sea	U	U	E	E	E	E	E
Wax Emulsions	E	G	E	E	E	E	E
Waxes	E	E	E	E	E	E	E
Xylene, Dry	E	E	E	U	E	E	E

** Consult Oklahoma City office for compatibility of Aluminum Bronze Material*

Seat Pressure & Temperature Ratings

NYLON / ACETAL / PEEK

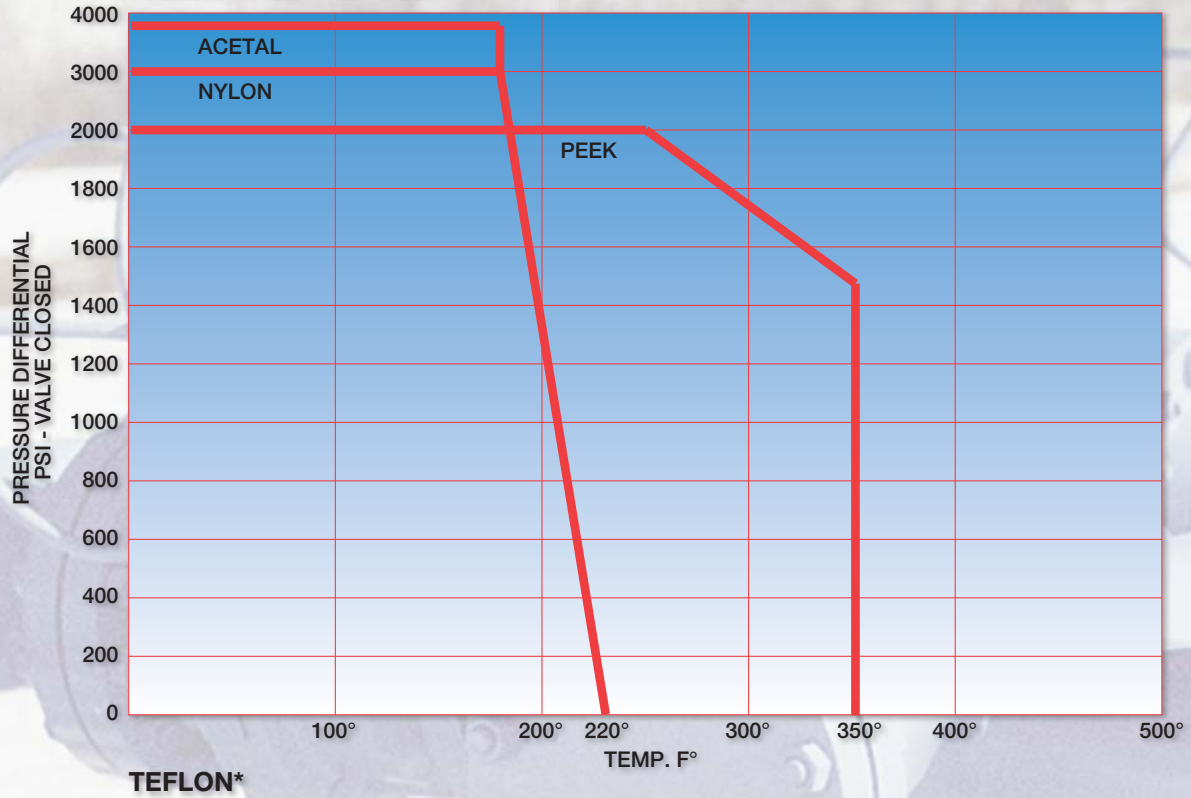

TEFLON*

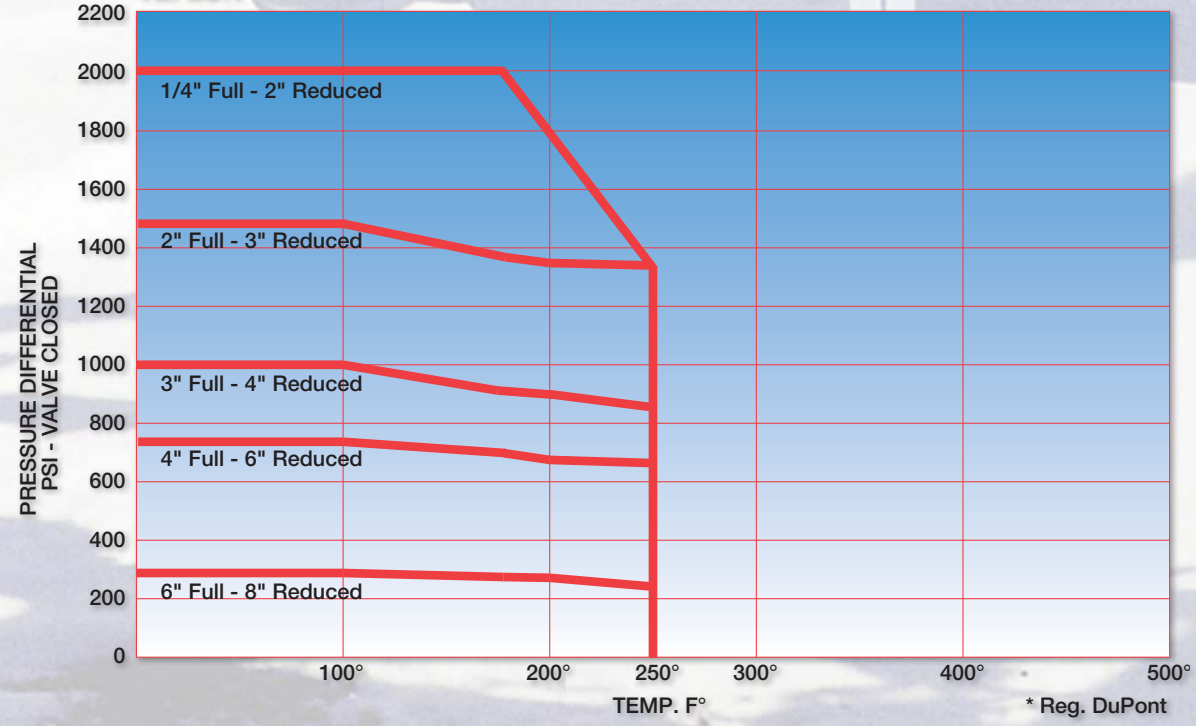

* Reg. DuPont

Flow Coefficient Data

Cv Ratings of Full Bore Valve

Depending upon pipe schedule with which they are used, Balon full bore valves have bore sizes exceeding or nearly equaling the pipe inside diameter. The best method of computing system pressure losses is to consider the valve an equivalent length of pipe.

Using the Cv method of rating full bore valves does not provide good accuracy. The reason for this is that Cv tests do not provide valid data until the measured pressure drop equals at least 2 psi. In the relatively short length involved in a valve, extremely high velocities are required to generate that pressure drop.

At these high velocities (which are well beyond those used in industry), other effects such as vibration and pulsation are then created by “super turbulent” flow. The net results are Cv ratings which are lower than would be derived if pressure losses could be consistently measured at velocities in the usable range.

Cv data for reduced port valves are listed on the product pages.



We Make Them

We Don't Import Valves









Installation Operation & Maintenance Manual
DOC.41.EDN Rev: E
March 2012

Pneumatic Actuators "E" and "P" series

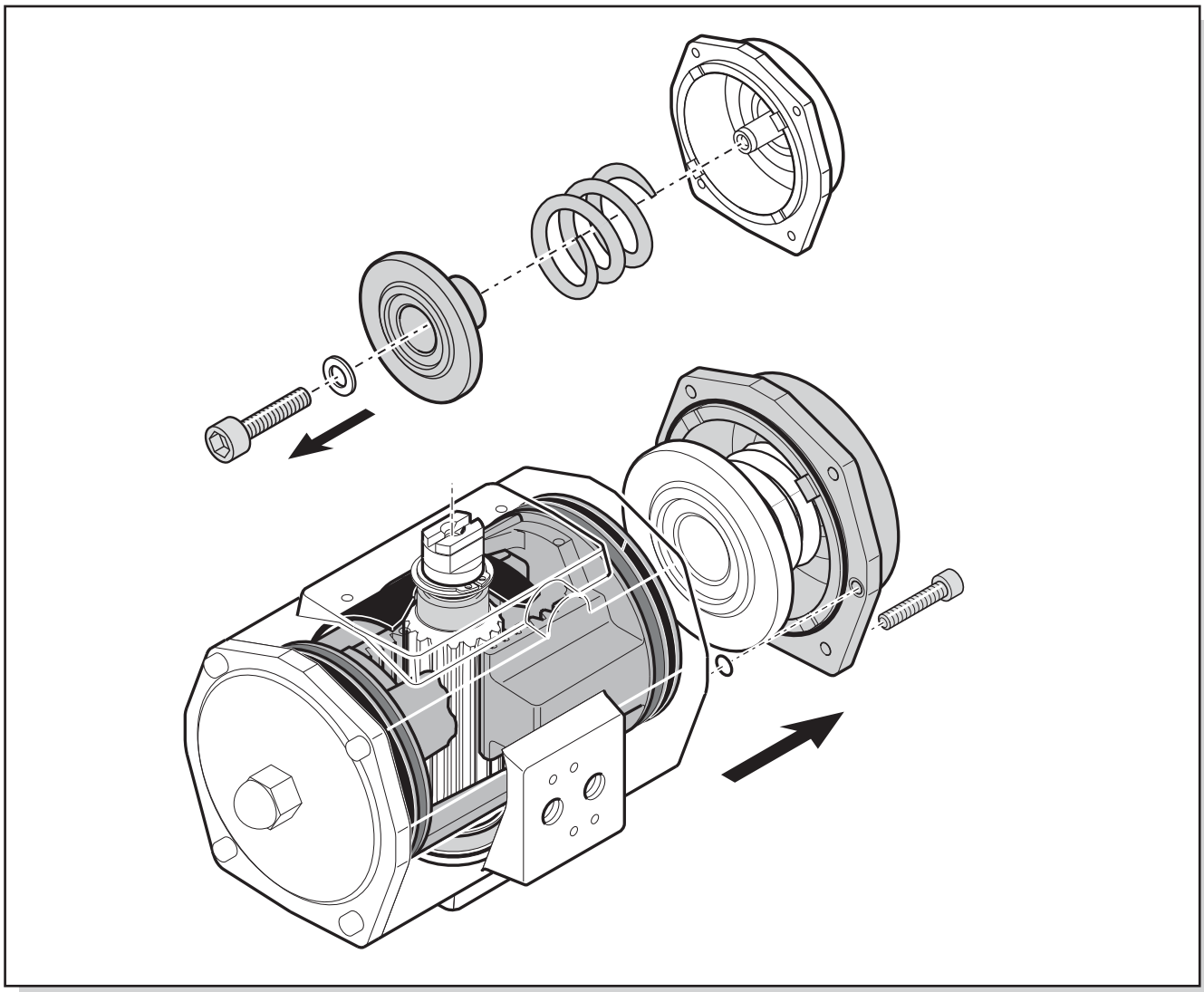

EL-O-MATIC™

www.El-O-Matic.com

EMERSON™
Process Management

CONTENTS

1 **INTRODUCTION** 4
1.1 Identification 4
1.2 Product code 6
2 **CONSTRUCTION DETAILS** 9
3 **PRINCIPLES OF OPERATION** 10
3.1 Air connections double acting 11
3.2 Air connections spring return 11
3.3 Recommended tubing sizes 12
3.4 Air consumption litre/stroke at atmospheric pressure 12
4 **ASSEMBLY CODES** 13
4.1 Installation 14
4.2 Stroke adjustment 16
4.2.1 L1 one way stroke adjustment 17
4.2.2 DSA two way stroke adjustment 19
4.2 Tool table 23
5 **DISASSEMBLY** 24
5.1 Before starting 24
5.2 Removing endcaps type ES/ED 25 to 350 25
5.3 Removing endcaps type PE/PS and ES 600 to 1600 26
5.4 Removing Pistons/Spindle, E- and P-series 27
5.5 Removing insert 28
6 **REASSEMBLY** 29
6.1 Reassembly guide band and shaft 29
6.2 Reassembly pistons 30
6.3 Reassembly endcaps double acting actuators 31
6.4 Reassembly endcaps single acting actuators ES25 - ES350 32
6.5 Reassembly endcaps single acting actuators ES600 - PS4000 33
6.6 Reassembly of springclip and insert 35
7 **PARTS LIST** 36

INHALT

1 **EINLEITUNG** 4
1.1 Unterscheidung 4
1.2 Produktcode 7
2 **KONSTRUKTIVE EINZELHEITEN** 9
3 **FUNKTIONSPRINZIP** 10
3.1 Luftanschlüsse doppeltwirkend 10
3.2 Luftanschlüsse mit Federrückstellung 11
3.3 Empfohlene Rohrabmessungen 12
3.4 Luftverbrauch (Liter/Hub) bei Atmosphärendruck 12
4 **AUFBAUCODE** 13
4.1 Aufbau 14
4.2 Hubbegrenzung 16
4.2.1 Einstellen der einfacher Hubbegrenzung L1 17
4.2.2 Einstellen der doppelter Hubbegrenzung DSA 19
4.3 Werkzeugtabelle 23

5 **DEMONTAGE** 24
5.1 Vor der Demontage 24
5.2 Endkappen Typ ES/ED 25 bis 350 ausbauen 25
5.3 Endkappen Typ PE/PS und ES 600 bis 1600 ausbauen 26
5.4 Kolben/Wellen, E- und P-Serie, ausbauen 27
5.5 Insert ausbauen 28
6 **ZUSAMMENBAU** 29
6.1 Zusammenbau von Führungsband und Antriebswelle 29
6.2 Zusammenbau der Kolben 30
6.3 Zusammenbau Endkappen doppeltwirkende Antriebe 31
6.4 Zusammenbau Endkappen einfachwirkende Antriebe ES25 - ES350 32
6.5 Zusammenbau Endkappen einfachwirkende Antriebe ES600 - PS4000 33
6.6 Zusammenbau von Seegerring und Insert 35
7 **STÜCKLISTE** 36

INHOUD

*1 **INLEIDING** 4*
1.1 Identificatie 4
1.2 Product code 8
*2 **CONSTRUCTIEDETAILS** 9*
*3 **BEDIENING** 10*
3.1 Luchtaansluitingen, dubbelwerkend 10
3.2 Luchtaansluitingen, veerretour 11
3.3 Aanbevolen buisafmetingen 12
3.4 Luchtverbruik liter/slag bij atmosferische druk 12
*4 **MONTAGECODES** 13*
4.1 Installatie 14
4.2 Slagbegrenzing 16
4.2.1 Instellen van enkelzijdige slagbegrenzing L1 15
4.2.2 Instellen van dubbelzijdige slagbegrenzing DSA 19
4.2 Gereedschapstabel 23
*5 **DEMONTEREN** 24*
5.1 Alvorens te beginnen 24
5.2 Deksels verwijderen type ES/ED 25 tot 350 25
5.3 Deksels verwijderen type PE/PS en ES 600 tot 1600 26
5.4 Zuigers/spindel verwijderen, E- en P-serie 27
5.5 Removing insert / Insert ausbauen / Insert verwijderen 28
*6 **OPNIEUW MONTEREN** 29*
6.1 Opnieuw monteren van geleideband en as 29
6.2 Opnieuw monteren van zuigers 30
6.3 Opnieuw monteren deksels van dubbelwerkende aandrijvingen 31
6.4 Opnieuw monteren deksels van enkelwerkende aandrijvingen ES25 - ES350 32
6.5 Opnieuw monteren deksels van enkelwerkende aandrijvingen ES600 - PS4000 33
6.6 Opnieuw monteren van Seegerring en insert 35
*7 **STUKLIJSTEN** 36*

1 INTRODUCTION / EINLEITUNG / *INLEIDING*

1.1 Identification / Unterscheidung / *Identificatie*

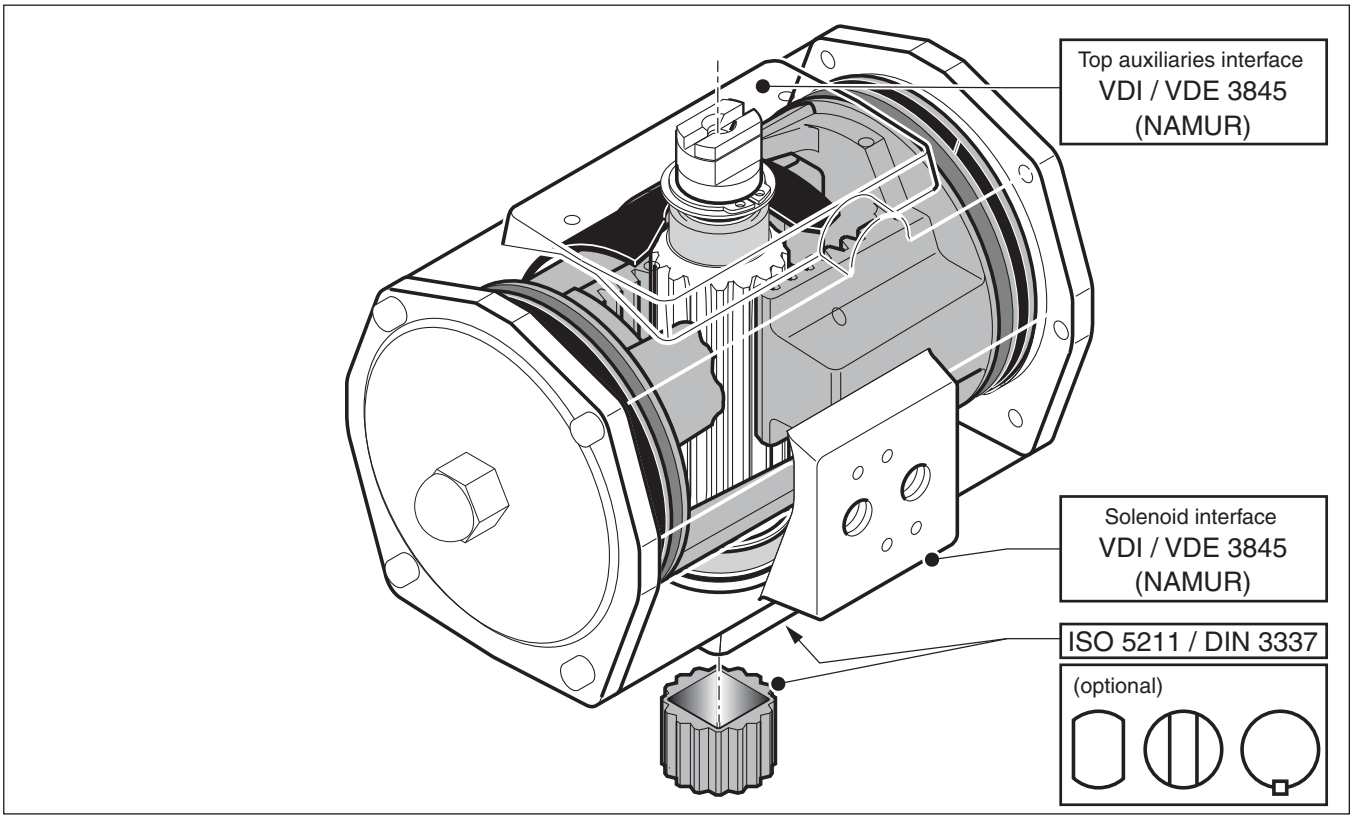

1.1

Warning! Actuator must be isolated both pneumatically and electrically before any (dis)assembly is begun. Before mounting or (dis)assembling the actuator consult the relevant sections of this manual.

Achtung! Der Antrieb muß vor jedem Ausbau sowohl pneumatisch, als auch elektrisch von allen Anschlüssen abgekoppelt werden. Lesen Sie vor dem Einbau oder Ausbau des Antriebes die entsprechenden Kapitel dieses Handbuchs aufmerksam durch!

Waarschuwing! *Aandrijving moet zowel pneumatisch als elektrisch afgekoppeld worden, voordat met (de) monteren begonnen kan worden. Raadpleeg de desbetreffende paragrafen van deze handleiding alvorens te (de)monteren of toebehoren te bevestigen.*

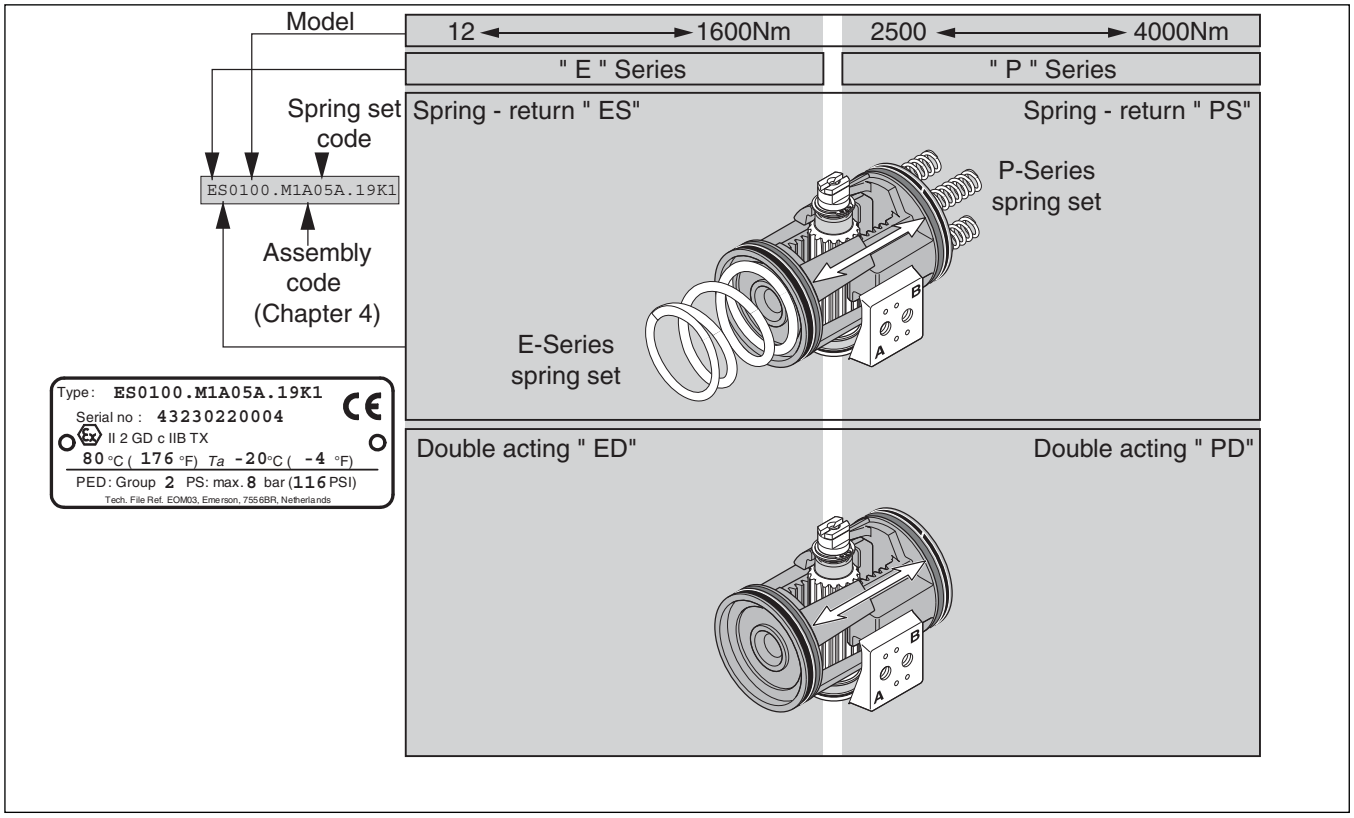

1.2

Model	-	Typ -		*model*
Spring set code	-	Federsatzcodenummer	-	*code verenset*
Assembly code (page 13)	-	Bezeichnung der Drehrichtung (s.13)	-	*montagecode (pag. 13)*
“E”- Series	-	“E”-Serie	-	*“E”-serie*
“P”- Series	-	“P”-Serie	-	*“P”-serie*
Spring return	-	Federrückstellend	-	*veerretour*
P-Series spring set	-	Federsatz der P-Serie	-	*verenset P-serie*
E-Series spring set	-	Federsatz der E-Serie	-	*verenset E-serie*
Double acting ED	-	doppeltwirkend ED	-	*dubbelwerkend ED*
Double acting PD	-	doppeltwirkend PD	-	*dubbelwerkend PD*

1.2 Product code

Action
ED or PD = Double acting **ES or PS** = Single acting (Spring return)

Actuator type
E-series
0012 = E12 **0025** = E25 **0040** = E40 **0065** = E65 **0100** = E100 **0150** = E150
0200 = E200 **0350** = E 350 **0600** = E600 **0950** = E950 **1600** = E1600

P-series
2500 = P2500 **4000** = P4000

Valve flange Metric ISO 5211	Metric DIN 3337	UNC/NPT ISO 5211	**Finish**
M =	**D =**	**U =**	Standard
N =	**E =**	**V =**	CSR coating + Aluminum pinion
O =	**F =**	**W =**	CSR coating + Stainless Steel pinion

Limit stops
0 = No limit stops — Standard on P-series
1 = L1 limit stops — Standard on E-Series
2 = Double Stroke Adjustment — Standard on DSA-Series

Assembly codes	**Rotation**	**Mounting**
A = Spring to close	clock wise	in line with pipeline
B = Spring to close	clock wise	across pipeline
C = Spring to open	counter clock wise	across pipeline
D = Spring to open	counter clock wise	in line with pipeline

Spring set E-Serie	**Spring set P-serie**
00 = Double acting actuator	**00** = Double acting actuator
01 = Springset 1	**04** = Springset 4
02 = Springset 2	**06** = Springset 6
03 = Springset 3	**08** = Springset 8
04 = Springset 4	**10** = Springset 10
05 = Springset 5	**12** = Springset 12
06 = Springset 6	**14** = Springset 14

Future expansion
A = Standard

Insert size (in mm.) [1]	**E12**	**E25**	**E40**	**E65**	**E100**	**E150**	**E200**
- ISO or UNC	00	11	14	14	19	19	22
- DIN	00	11	14	14	17	17	22
	E 350	**E600**	**E950**	**E1600**	**P2500**	**P4000**	
- ISO or UNC	27	27	36	46	00	00	
- DIN	22	27	36	46	00	00	

Visual Indication Code
D = Disk **K** = Knob **N** = No visual indication

Temperature range
0 = Standard TS: 80°C (176°F) / -20°C (-4°F)
1 = High temp TS: 120°C (248°F) / -20°C (-4°F)
2 = Low temp TS: 80°C (176°F) / -40°C (-40°F)

ES 0040.M 1 A 05 A.14 N 1

[1]Actuators E12, P2500 and P4000 have no inserts. They have have a inner square directly in the pinion
180° actuators are not covered by this configuration matrix.

1.2 Produktcode

Wirkrichtung
ED or PD = Doppeltwirkend **ES or PS** = Einfachwirkend (Federrückstellend)

Antriebstyp
E-series
0012 = E12 **0025** = E25 **0040** = E40 **0065** = E65 **0100** = E100 **0150** = E150
0200 = E200 **0350** = E 350 **0600** = E600 **0950** = E950 **1600** = E1600

P-series
2500 = P2500 **4000** = P4000

Armaturenflansch			**Oberflächenbeschichtung**
Metrisch ISO 5211	Metrisch DIN 3337	UNC/NPT ISO 5211	
M =	**D =**	**U =**	Standard
N =	**E =**	**V =**	CSR Beschichtung + Aluminium Welle
O =	**F =**	**W =**	CSR Beschichtung + Edelstahl Welle

Hubbegrenzung
0 = Keine Hubbegrenzung Standard bei P-series
1 = L1 Hubbegrenzung Standard bei E-Series
2 = Doppelter Hubbegrenzung Standard bei DSA-Series

Aufbaucode	**Drehrichtung**	**Montage**
A = Federschließend	im Uhrzeigersinn	parallel zur Leitung
B = Federschließend	im Uhrzeigersinn	quer zur Leitung
C = Federöffnend	gegen den Uhrzeigersinn	quer zur Leitung
D = Federöffnend	gegen den Uhrzeigersinn	parallel zur Leitung

Federsätze E-Serie	**Federsätze P-serie**
00 = Doppeltwirkender Antrieb	**00 =** Doppeltwirkender Antrieb
01 = Federsatz 1	**04 =** Federsatz 4
02 = Federsatz 2	**06 =** Federsatz 6
03 = Federsatz 3	**08 =** Federsatz 8
04 = Federsatz 4	**10 =** Federsatz 10
05 = Federsatz 5	**12 =** Federsatz 12
06 = Federsatz 6	**14 =** Federsatz 14

Zukünftige Erweiterung
A = Standard

Insert size (in mm.) [1]	**E12**	**E25**	**E40**	**E65**	**E100**	**E150**	**E200**
- ISO or UNC	00	11	14	14	19	19	22
- DIN	00	11	14	14	17	17	22
	E 350	**E600**	**E950**	**E1600**	**P2500**	**P4000**	
- ISO or UNC	27	27	36	46	00	00	
- DIN	22	27	36	46	00	00	

Sichtanzeige
D = Scheibe **K** = Knopf **N** = Keine Sichtanzeige

Temperaturbereich
0 = Standard Temperatur TS: 80°C (176°F) / -20°C (-4°F)
1 = Hohe Temperatur TS: 120°C (248°F) / -20°C (-4°F)
2 = Niederig Temperatur TS: 80°C (176°F) / -40°C (-40°F)

ES 0040.M 1 A 05 A.14 N 1

[1] Antriebe E12, P2500 und P4000 haben keine Inserts.
Sie haben eine viereckige Wellenaufnahme, direkt in der Welle. 180° Antriebe werden nicht durch diese Konfigurationsmatrix abgedeckt.

1.2 Product code

Werking
ED of PD *= Dubbelwerkend* ***ES of PS*** *= Enkelwerkend (Veerretour)*

Aandrijvings type
E-series
0012 *= E12* ***0025*** *= E25* ***0040*** *= E40* ***0065*** *= E65* ***0100*** *= E100* ***0150*** *= E150*
0200 *= E200* ***0350*** *= E 350* ***0600*** *= E600* ***0950*** *= E950* ***1600*** *= E1600*

P-series
2500 *= P2500* ***4000*** *= P4000*

Afsluiterflens			***Coating***
Metrisch	*Metrisch*	*UNC/NPT*	
ISO 5211	*DIN 3337*	*ISO 5211*	
M =	***D =***	***U =***	*Standaard*
N =	***E =***	***V =***	*CSR coating + Aluminum as*
O =	***F =***	***W =***	*CSR coating + RVS as*

Slagbegrenzing

0 = *Geen slagbegrenzing*	*Standaard bij P-series*
1 = *L1 slagbegrenzing*	*Standaard bij E-Series*
2 = *Dubbelzijdige slagbegrenzing*	*Standaard bij DSA-Series*

Montage codes	***Verdraaing***	***Montage***
A *= Veersluitend*	*met de klok mee*	*in lijn met de leiding*
B *= Veersluitend*	*met de klok mee*	*dwars op de leiding*
C *= Veeropenend*	*tegen de klok in*	*dwars op de leiding*
D *= Veeropenend*	*tegen de klok in*	*in lijn met de leiding*

Verenset E-serie	***Verenset P-serie***
00 *= Dubbelwerkende aandrijving*	***00*** *= Dubbelwerkende aandrijving*
01 *= Verenset 1*	***04*** *= Verenset 4*
02 *= Verenset 2*	***06 =*** *Verenset 6*
03 *= Verenset 3*	***08 =*** *Verenset 8*
04 *= Verenset 4*	***10 =*** *Verenset 10*
05 *= Verenset 5*	***12 =*** *Verenset 12*
06 *= Verenset 6*	***14 =*** *Verenset 14*

Toekomstige uitbreiding
A *= Standaard*

Insert size (in mm.) [1]	***E12***	***E25***	***E40***	***E65***	***E100***	***E150***	***E200***
- ISO or UNC	*00*	*11*	*14*	*14*	*19*	*19*	*22*
- DIN	*00*	*11*	*14*	*14*	*17*	*17*	*22*
	E 350	***E600***	***E950***	***E1600***	***P2500***	***P4000***	
- ISO or UNC	*27*	*27*	*36*	*46*	*00*	*00*	
- DIN	*22*	*27*	*36*	*46*	*00*	*00*	

Visuele positie aanduiding
D *= Schijf* ***K*** *= Knop* ***N*** *= Geen positie aanduiding*

Temperatuursbereik

0 *= Standaard temperatuur*	*TS: 80°C (176°F)*	*/*	*-20°C (-4°F)*
1 *= Hoge temperatuur*	*TS: 120°C (248°F)*	*/*	*-20°C (-4°F)*
2 *= Lage temperatuur*	*TS: 80°C (176°F)*	*/*	*-40°C (-40°F)*

ES 0040.M 1 A 05 A.14 N 1

[1] *Aandrijvingen E12, P2500 en P4000 hebben geen inserts. Deze hebben een binnenvierkant direct in de as 180° aandrijvingen worden niet door deze configuratie matrix afgedekt.*

2 CONSTRUCTION DETAILS / KONSTRUKTIVE EINZELHEITEN / *CONSTRUCTIEDETAILS*

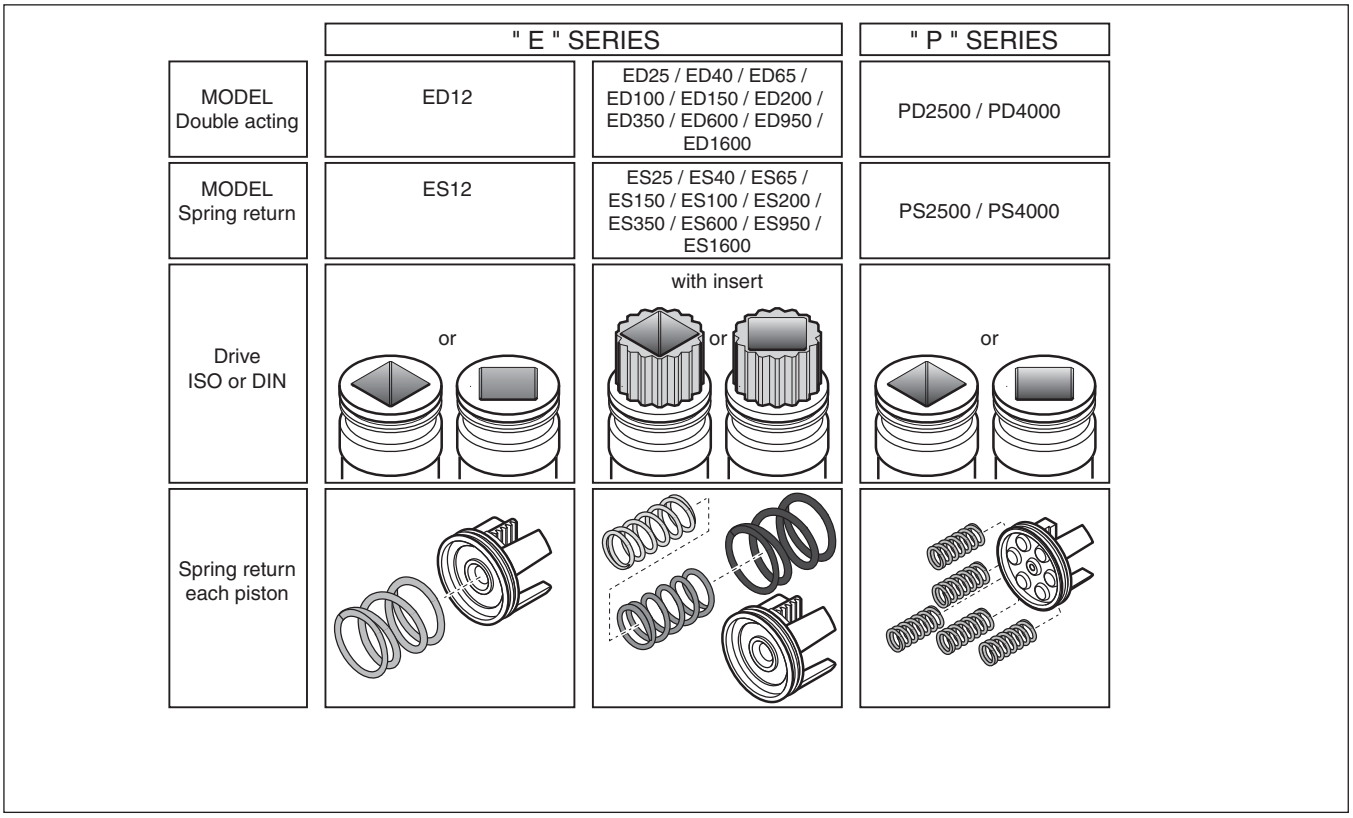

2.1

"E" Series	-	"E"-SERIE	-	*"E"-serie*
"P" Series	-	"P"-SERIE	-	*"P"-serie*
MODEL double acting	-	doppeltwirkender TYP	-	*MODEL dubbelwerkend*
MODEL spring return	-	TYP mit Federrückstellung	-	*MODEL veerretour*
Drive ISO or DIN	-	Antrieb gemäß ISO oder DIN	-	*Aandrijving ISO of DIN*
Spring return each piston	-	beiderseits Federrückstellung	-	*Veerset per zuiger*
or	-	oder	-	*of*
with insert	-	mit Insert		*met insert*

3 PRINCIPLES OF OPERATION / FUNKTIONSPRINZIP / *BEDIENING*

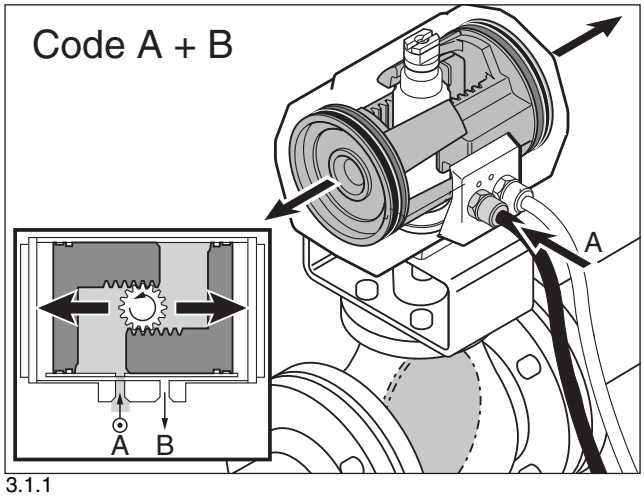

3.1.1

3.1 Air connections double acting

Check the assembly code before connecting air supply (see page 5). Reverse air supply in case of assembly codes C and D (see page 13).

3.1.1
Air to port A: counterclockwise / open.

3.1.2
Air to port B: clockwise / close.

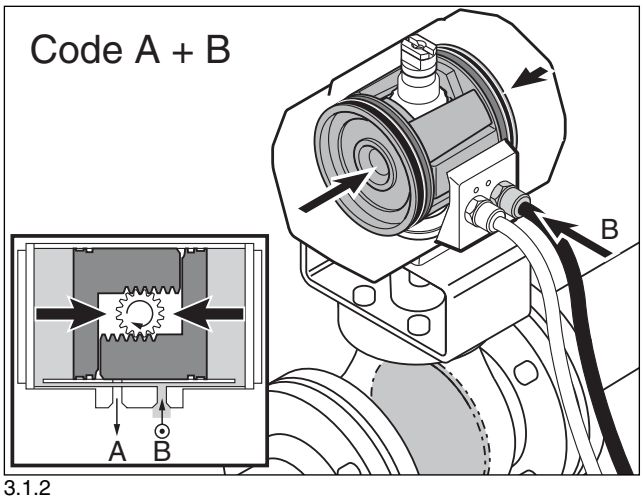

3.1.2

3.1 Luftanschlüsse, doppeltwirkend

Vor dem anschließen der Zuluft den Aufbaucode kontrollieren (siehe Seite 5).
Bei Aufbaucode C und D ist die Luftzufuhr zu tauschen (siehe Seite 13).

3.1.1
Luftzufuhr an Anschluß A: gegen den Uhrzeigersinn / offen.

3.1.2
Luftzufuhr an Anschluß B: im Uhrzeigersinn / geschlossen.

3.1 Luchtaansluitingen, dubbelwerkend

Controleer de montagecode voor het aansluiten van de luchttoevoer (zie pagina 5). Verwissel de luchttoevoer in geval van montagecodes C en D (zie pagina 13).

3.1.1
Lucht naar poort A: tegen de wijzers van de klok in / open

3.1.2
Lucht naar poort B: met de wijzers van de klok mee / dicht.

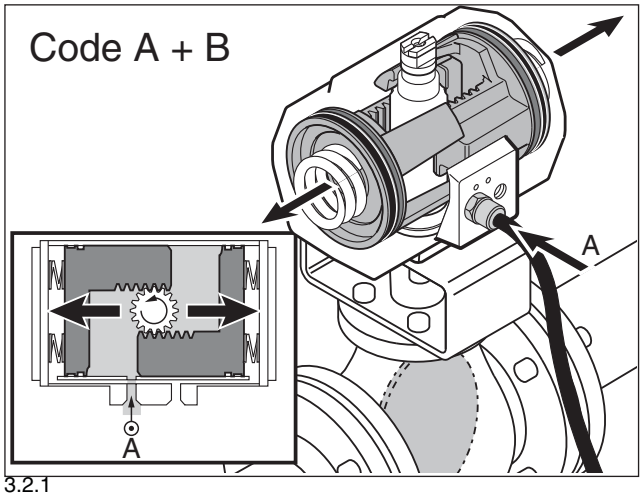

3.2.1

3.2 Air connections spring return

Check the assembly code before connecting air supply (see page 5). Reverse air supply in case of assembly codes C and D (see page 13).

3.2.1
Air to port A: counterclockwise / open.

3.2.2
Spring return: clockwise / close.

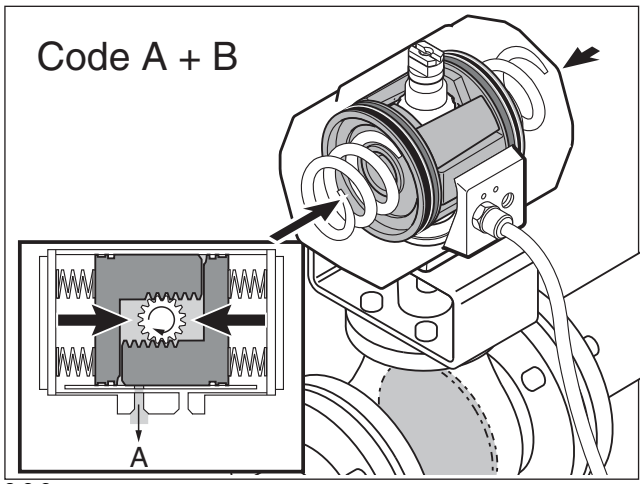

3.2.2

3.2 Luftanschlüsse mit Federrückstellung

Vor dem anschließen des Zuluft den Aufbaucode kontrolieren (siehe Seite 5). Bei Aufbaucode C und D ist die Luftzufuhr zu tauschen (siehe Seite 13).

3.2.1
Luftzufuhr an Anschluß A: gegen den Uhrzeigersinn / offen.

3.2.2
Federrückstellung: im Uhrzeigersinn / geschlossen.

3.2 Luchtaansluitingen, veerretour

Controleer de montagecode voor het aansluiten van de luchttoevoer (zie pagina 5). Verwissel de luchttoevoer in geval van montagecodes C en D (zie pagina 13).

3.2.1
Lucht naar poort A: tegen de wijzers van de klok in / open

3.2.2
Veerretour: met de wijzers van de klok mee / dicht.

3.3 Recommended tubing sizes / Empfohlene Rohrabmessungen / *Aanbevolen buisafmetingen*

Actuator Model no.	Runs up to 1.2 mtr / 4ft	Runs over 1.2 mtr. / 4ft
Antriebstyp	**Bis 1,20 m**	**über 1,20 m**
Aandrijving modelnr.	**Tot 1,2 m**	**meer dan 1,2 m**
E-12, 25, 40, 65	6 mm / 1/4"	6 mm / 1/4"
E-100, 150, 200, 350, 600, 950	6 mm / 1/4"	8 mm / 5/16"
E1600 / P-2500, 4000	6 mm / 1/4"	10 mm / 3/8"

3.4 Air consumption at atmospheric pressure / Luftverbrauch bei Atmosphärendruck / *Luchtverbruik bij atmosferische druk*

	Actuator type / Modell / Model												
	E12	**E25**	**E40**	**E65**	**E100**	**E150**	**E200**	**E350**	**E600**	**E950**	**E1600**	**P2500**	**P4000**
Air chamber	litre/stroke - (Ltr./Hub) - liter/slag												
A	0.05	0.10	0.16	0.22	0.35	0.73	0.8	1.2	2.9	4.7	7.3	8.0	13.5
B	0.06	0.11	0.22	0.36	0.49	0.65	1.0	1.8	3.1	4.9	8.0	9.3	17.5
Air chamber	cu.in./stroke												
A	3.1	6.1	9.8	13	21	45	49	73	177	287	445	488	824
B	3.7	6.7	13.4	22	30	40	61	110	189	299	488	568	1068

- Model - Modell - *Model*
- Air chamber - Luftkammer - *Luchtkamer*

4 ASSEMBLY CODES / AUFBAUCODE / *MONTAGECODES*

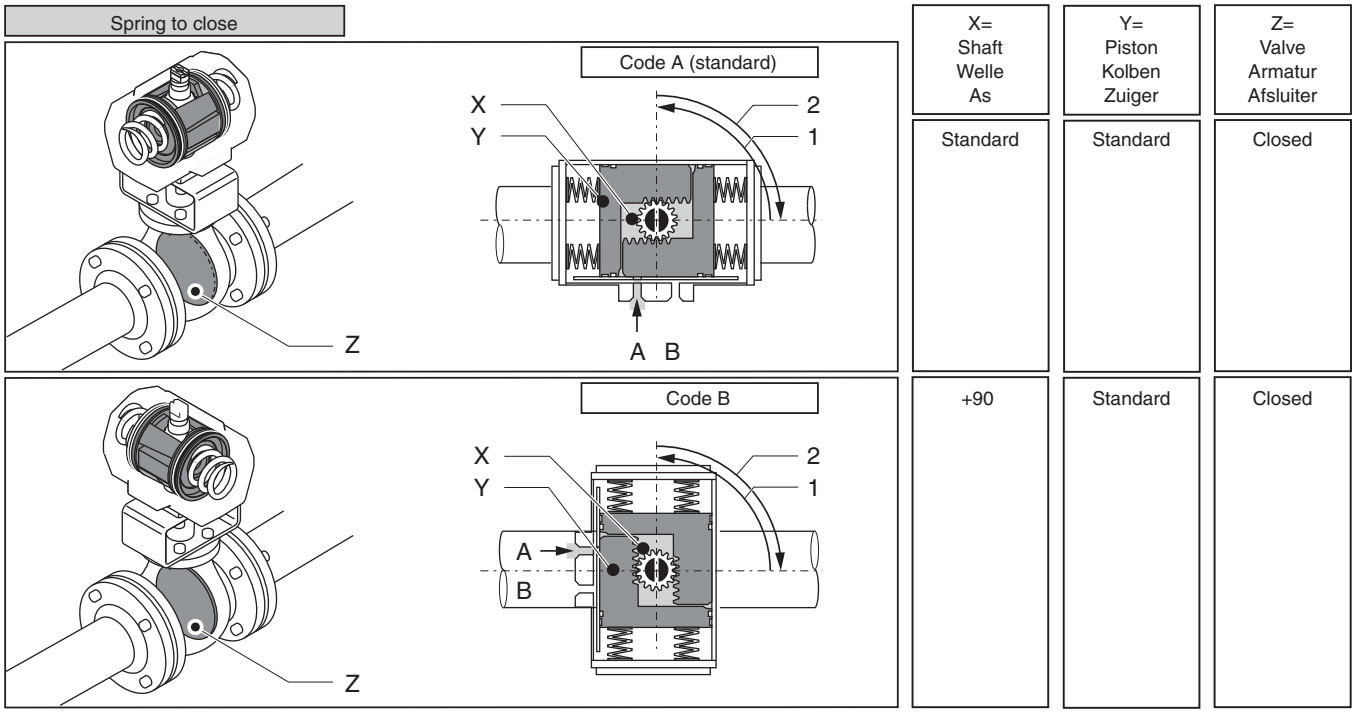

X= Shaft Welle As	Y= Piston Kolben Zuiger	Z= Valve Armatur Afsluiter
Standard	Standard	Closed
+90	Standard	Closed

4.1 Spring to close (rotation CW, topview) /

Schließfeder (Drehung im Uhrzeigersinn, Draufsicht) /

Veersluitend (rotatie met de wijzers van de klok mee, bovenaanzicht)

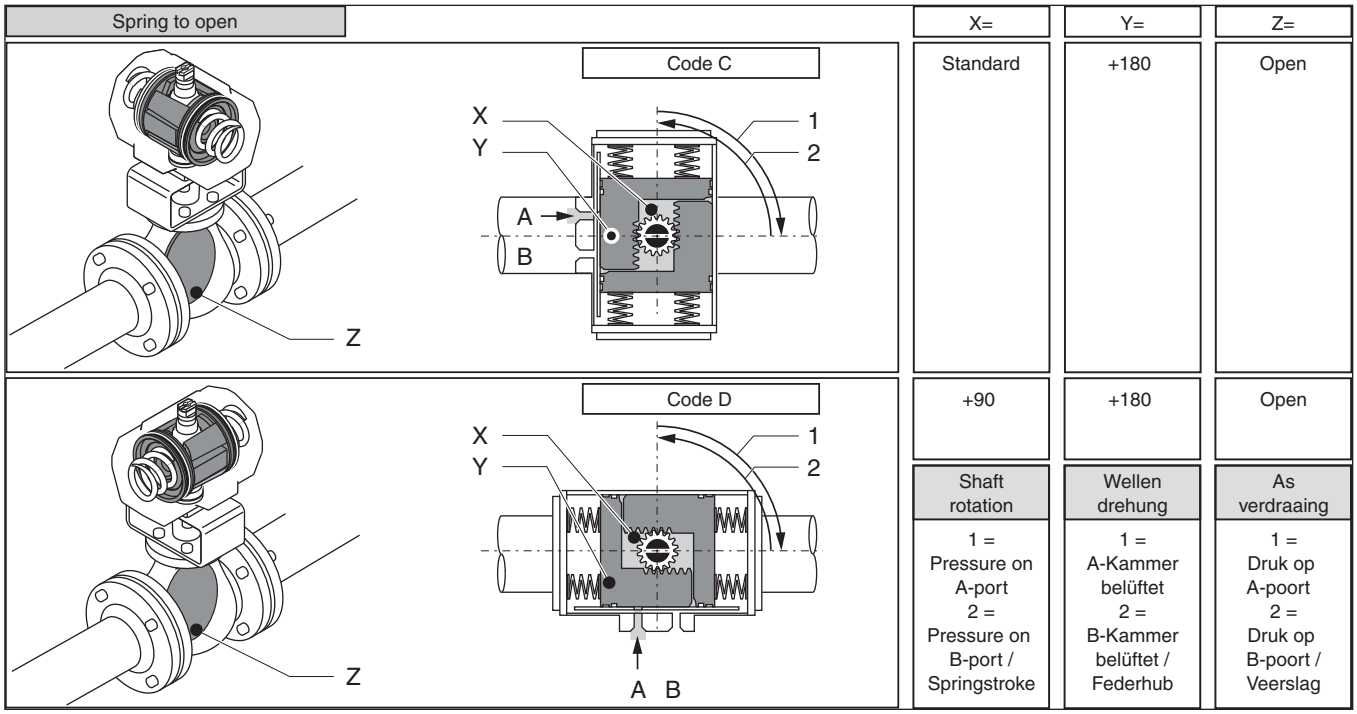

X=	Y=	Z=
Standard	+180	Open
+90	+180	Open
Shaft rotation	Wellen drehung	As verdraaing
1 = Pressure on A-port 2 = Pressure on B-port / Springstroke	1 = A-Kammer belüftet 2 = B-Kammer belüftet / Federhub	1 = Druk op A-poort 2 = Druk op B-poort / Veerslag

4.2 Spring to open (rotation CCW) /

Federkraftöffnend (Drehung gegen den Uhrzeigersinn) /

Veeropenend (rotatie tegen de wijzers van de klok in)

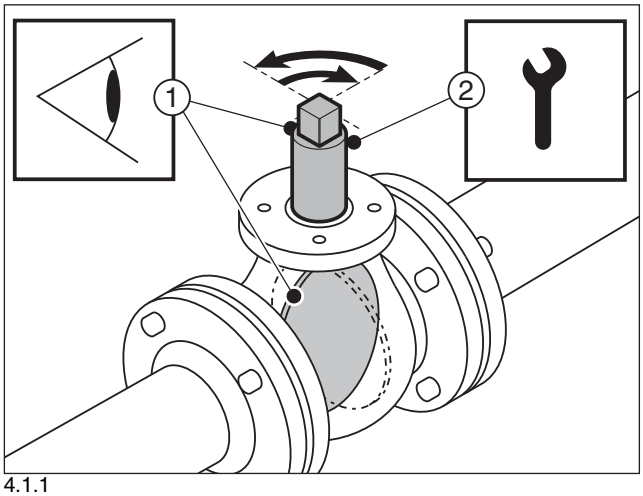

4.1.1

4.1 Installation

4.1.1 / 4.1.2 / 4.1.3

Remove handle nut, handle, lockwasher, etc. from valve if required.

Caution! When mounting do not hit with hammer on shaft top.

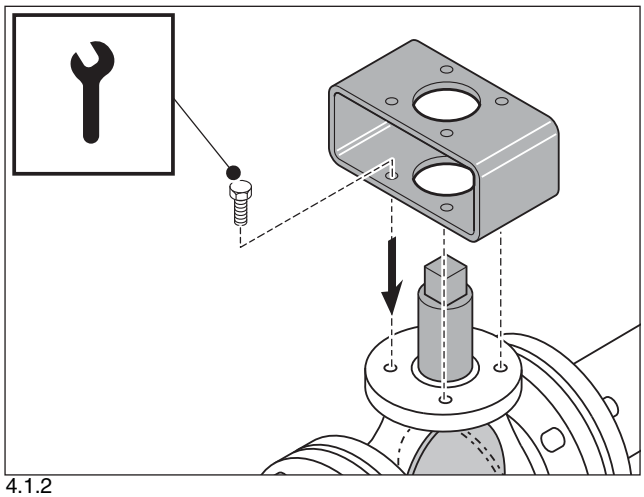
4.1.2

4.1 Aufbau

4.1.1 / 4.1.2 / 4.1.3

Mutter der Handbetätigung, Handbetätigung, Sicherungsscheibe usw., falls erforderlich, von der Armatur entfernen.

Achtung! Bei Montage nicht mit Hammer auf das Wellenende schlagen!

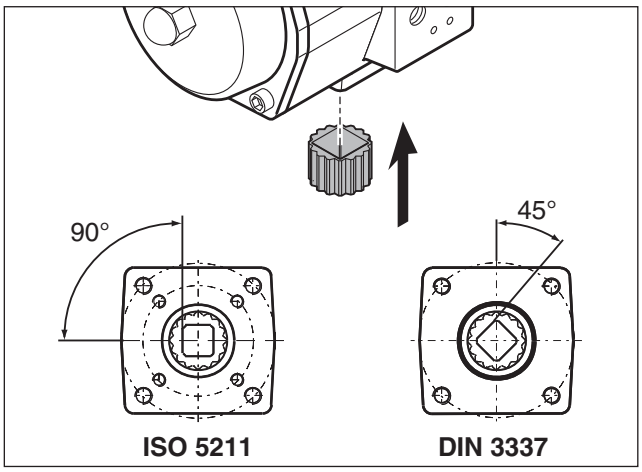

4.1.3

4.1 Installatie

4.1.1 / 4.1.2 / 4.1.3

Verwijder indien nodig hendelmoer, hendel, veerring etc. van de afsluiter.

***Voorzichtig!** Bij montage niet met hammer op de astop slaan.*

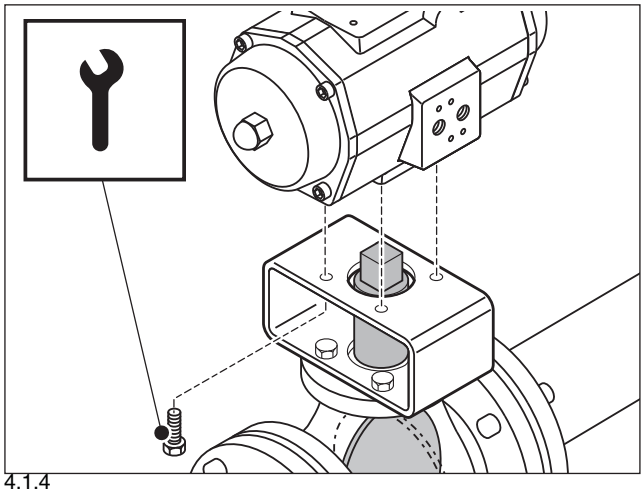

4.1.4

4.1.4 / 4.1.5.

Valves are manufactured so that they operate in only one 90 degree segment. The actuator should be mounted for counterclock-wise rotation to open and clockwise to close the valve.

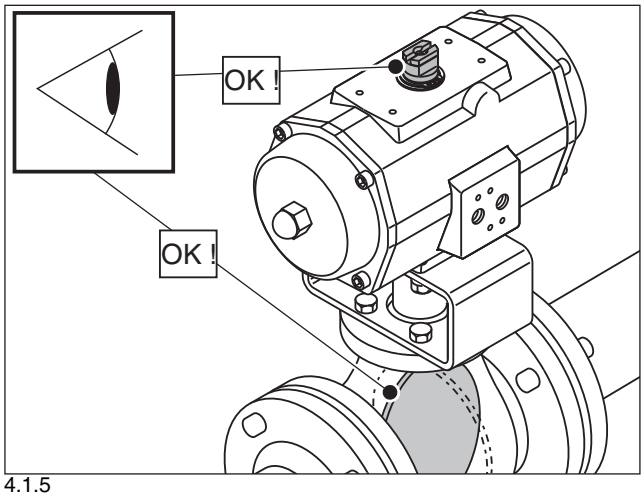

4.1.5

4.1.4 / 4.1.5.

Die Armaturen sind so konstruiert, daß sie nur innerhalb eines 90°-Winkels wirksam sind. Der Antrieb sollte so montiert werden, daß eine Drehung gegen den Uhrzeigersinn die Armatur öffnet und daß eine Drehung im Uhrzeigersinn die Armatur schließt.

4.1.4 / 4.1.5.

Afsluiters zijn zodanig geconstrueerd dat deze alleen in een segment van 90 graden werken. Bevestig de aandrijving zo dat bij rotatie tegen de wijzers van de klok in de afsluiter wordt geopend en bij rotatie met de wijzers van de klok mee de afsluiter wordt gesloten.

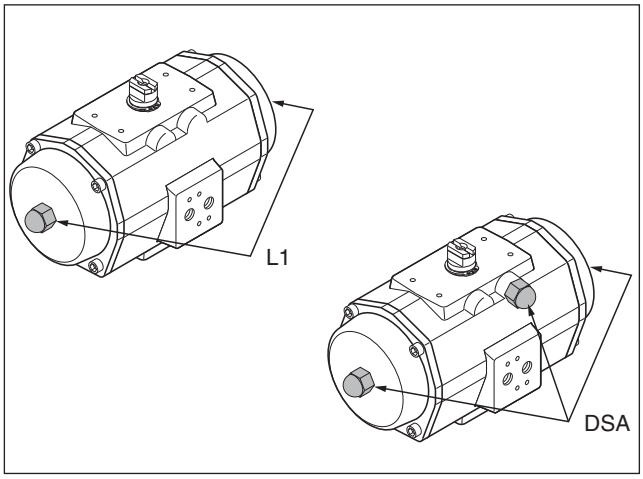

4.2.1

4.2 Stroke adjustment

4.2.1

To achieve stroke adjustment, there are two actuator executions:

1- L1 One way limit stops
2- DSA Two way limit stops

4.2.2/4.2.3

Maximum stroke and adjustable stroke range of the L1 or DSA execution.

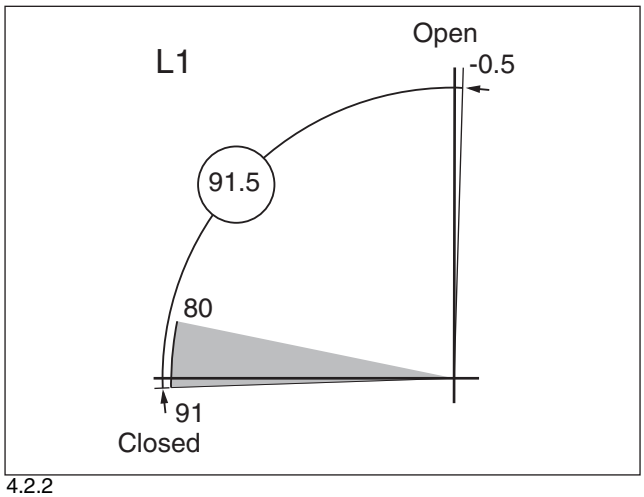

4.2.2

4.2 Hubbegrenzung

4.2.1

Für die Hubbegrenzung gibt es zwei Antriebsausführungen:

1- L1 einfache Hubbegrenzung
2- DSA doppelte Hubbegrenzung

4.2.2/4.2.3

Der Bereich des maximalen Hubs und des verstellbaren Hubs für die L1- oder DSA Ausführung.

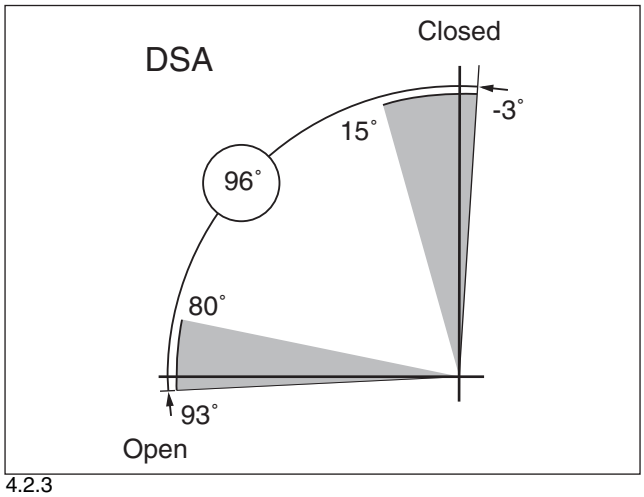

4.2.3

Slagbegrenzing

4.2.1

Ten behoeve van de slaginstelling bestaan er twee uitvoeringen van de aandrijvingen:

1- L1 enkelzijdige slagbegrenzing
2- DSA dubbelzijdige slagbegrenzing

4.2.2/4.2.3

Maximale slag en het bereik van de in te stellen slag van de L1- en de DSA uitvoering

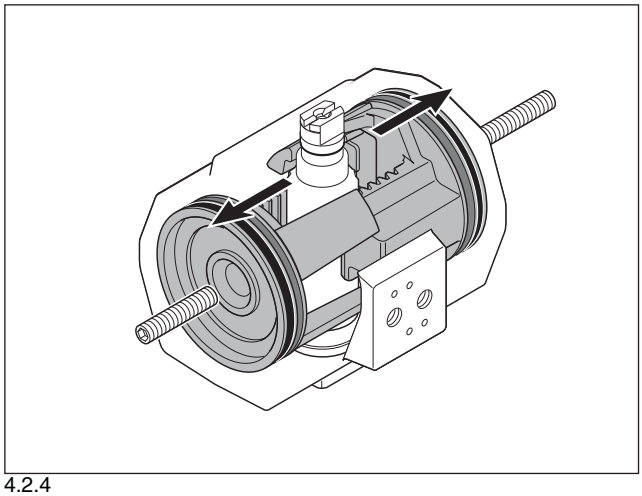

4.2.4

4.2.1 L1 one way stroke adjustment

The L1 one way stroke adjustment limits the outward movement of the pistons (see fig. 4.2.4). The double acting and the single acting actuators both have limit stop bolts in the end caps.

Procedure:

1. Mount the actuator on the valve (see chapter 4).
2. Remove nut covers, loosen the lock nuts and turn out the limit stop bolts 4 turns (see fig. 4.2.5). Select tool from table (see page 23).

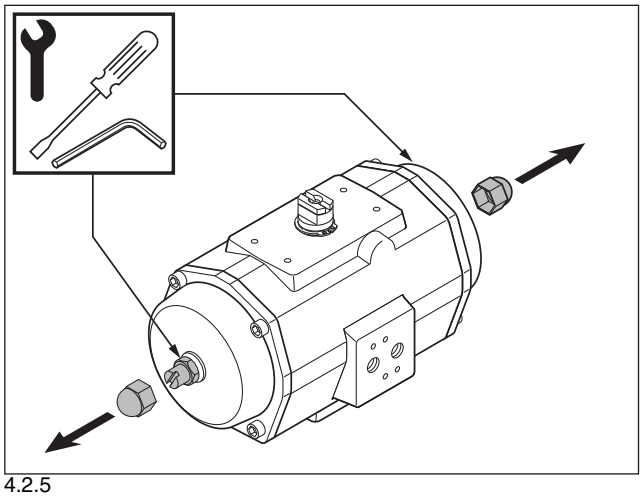

4.2.5

4.2.1 Einstellen der einfacher Hubbegrenzung L1

Die Einstellung der einfacher Hubbegrenzung L1 begrenzt die Bewegung der Kolben beim Ausfahren (siehe Abb. 4.2.4). Die Begrenzungsschrauben für den doppeltwirkenden und den einfachwirkenden Antrieb befinden sich jeweils in den Endkappen.

Verfahren:

1. Montieren Sie den Antrieb auf das Ventil (siehe Kapitel 4).
2. Entfernen Sie die Schutzkappen, lockern Sie die Sicherungsmuttern und drehen Sie die Begrenzungsschrauben 4 Umdrehungen heraus (siehe Abb. 4.2.5). Wählen Sie das geeignete Werkzeug aus der Tabelle (siehe Seite 23).

4.2.1 Instellen van enkelzijdige slagbegrenzing L1

De L1-enkelzijdige slagbegrenzing begrenst de buitenwaartse beweging van de zuigers (zie afb. 4.2.4). De dubbel werkende en de enkel werkende aandrijvingen hebben beiden slagbegrenzingsbouten in de deksels.

Handelwijze:

1. *Bevestig de aandrijving op de afsluiter (zie hoofdstuk 4).*
2. *Verwijder de moerbeschermkappen, draai de borgmoeren los en draai de slagbegrenzingsbouten 4 omwentelingen naar buiten (zie afb. 4.2.5). Kies het gereedschap uit de tabel (zie pagina 23).*

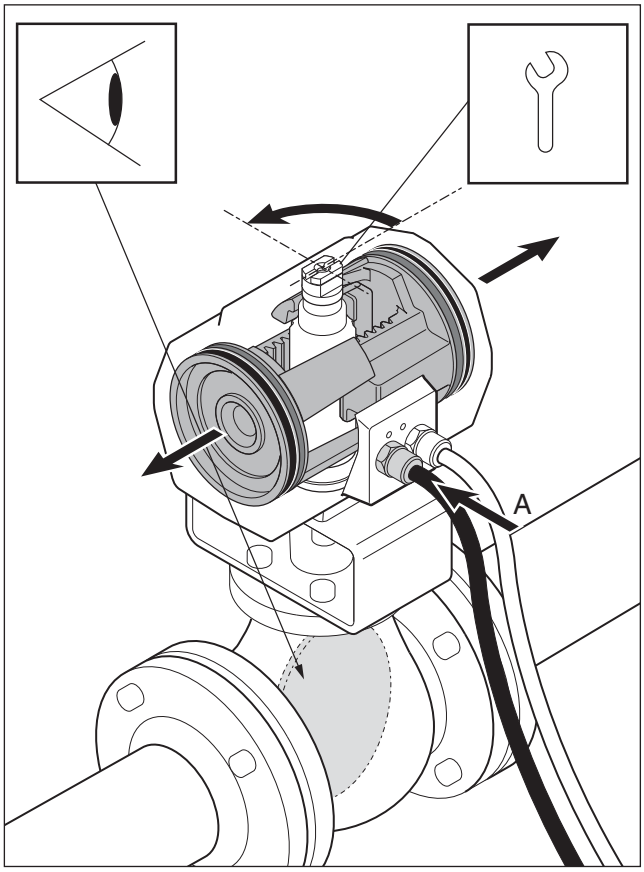

4.2.6

3. Turn actuator shaft until the valve is in the desired position (see fig. 4.2.6)
   Use some pressure on the “A” port.
   Use a wrench for accurate positioning.
4. Turn in both the limit stop bolts until an obstruction is felt (do not force) and lock the lock nut and place the nut covers
   (see fig. 4.2.7). Select tool from table (see page 23).

3. Drehen Sie die Antriebswelle, bis sich das Ventil in der gewünschten Position befindet (siehe Abb. 4.2.6). Geben Sie einen geringen Druck auf Anschluß "A" auf. Verwenden Sie zur genauen Positionierung einen Maulschlüssel.
4. Drehen Sie die beiden Begrenzungsschrauben hinein, bis Sie einen Widerstand verspüren (keine übermäßige Kraft aufwenden), verriegeln Sie die Sicherungsmutter und setzen Sie die Schutzkappen wieder auf (siehe Abb. 4.2.7). Wählen Sie das geeignete Werkzeug aus der Tabelle (siehe Seite 23).

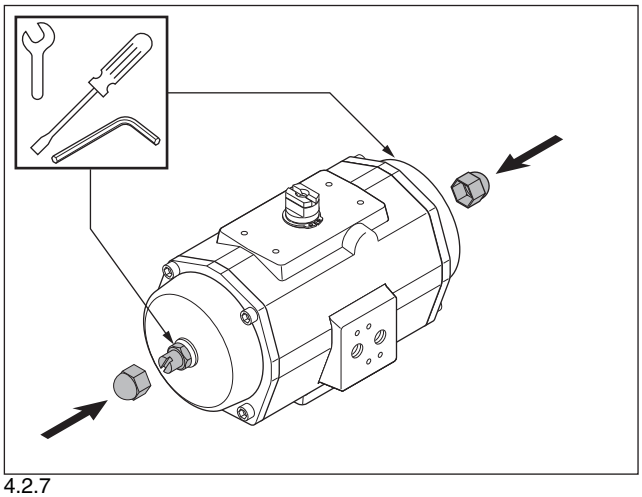

4.2.7

3. Draai de aandrijvingsas, totdat de afsluiter op de gewenste positie staat (zie afb. 4.2.6). Zet een beetje druk op de “A”-poort.
   Gebruik een steeksleutel voor nauwkeurige positionering.
4. Draai de beide slagbegrenzingsbouten naar binnen, totdat u weerstand voelt (gebruik geen kracht), zet de borgmoer vast en plaats de moerbeschermkappen (zie afb. 4.2.7). Kies het gereedschap uit de tabel (zie pagina 23).

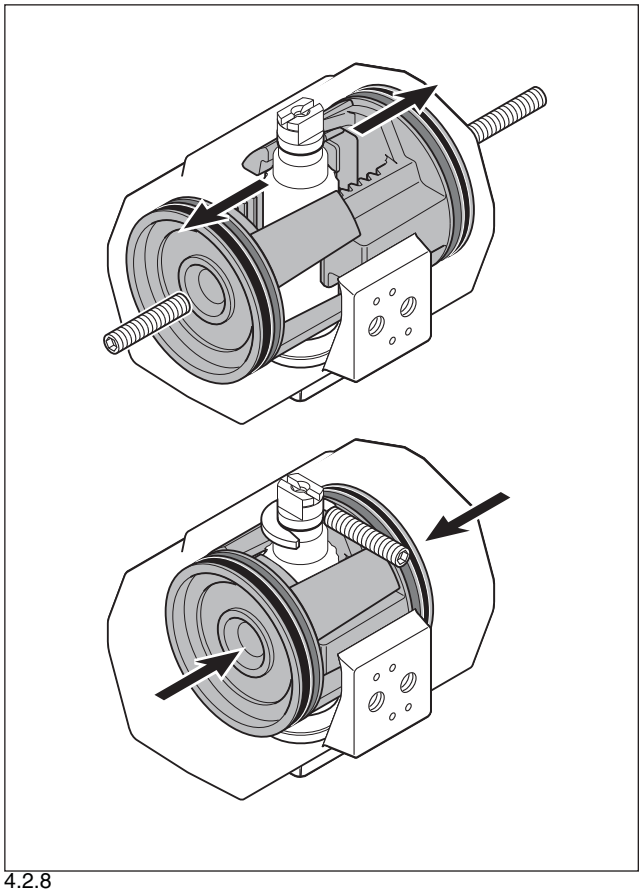

4.2.8

4.2.2 DSA two way stroke adjustment

The DSA two way stroke adjustment limits the outward and the inward movement of the pistons (see fig. 4.2.8). The double acting and the single acting actuators both have limit stop bolts in the end caps to limit the outward stroke. The bolt above the air connection interface limits the inward stroke.

Procedure:

1. Mount the actuator on the valve (see chapter 4).

4.2.2 Einstellen der doppelter Hubbegrenzung DSA /

Die Einstellung der doppelter Hubbegrenzung DSA begrenzt die Bewegung der Kolben beim Aus- und Einfahren (siehe Abb. 4.2.8). Die Begrenzungsschrauben für den doppeltwirkenden und den einfachwirkenden Antrieb, die den Ausfahrhub begrenzen, befinden sich jeweils in den Endkappen. Die Schraube über dem Luftanschluß begrenzt den Einfahrhub.

Verfahren:

1. Montieren Sie den Antrieb auf das Ventil (siehe Kapitel 4).

4.2.2 *Instellen van dubbelzijdige slagbegrenzing DSA*

De DSA-dubbelzijdige slagbegrenzing begrenst de buitenwaartse en de binnenwaartse beweging van de zuigers (zie afb. 4.2.8). De dubbel werkende en de enkel werkende aandrijvingen hebben beiden slagbegrenzingsbouten in de deksels ter begrenzing van de buitenwaartse slag. De bout boven het luchtaansluitvlak begrenst de binnenwaartse slag.

***Handelwijze**:*

1. *Bevestig de aandrijving op de afsluiter (zie hoofdstuk 4).*

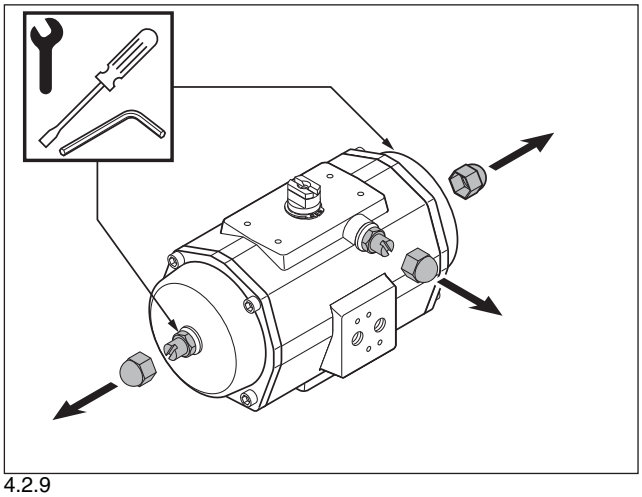

4.2.9

2. Remove nut covers, loosen the lock nuts and turn out the limit stop bolts 4 turns (see fig. 4.2.9).
3. Turn actuator shaft until the valve is in the desired position (see fig. 4.2.10).
   Use some pressure on the “A” port.
   Use a wrench for accurate positioning.

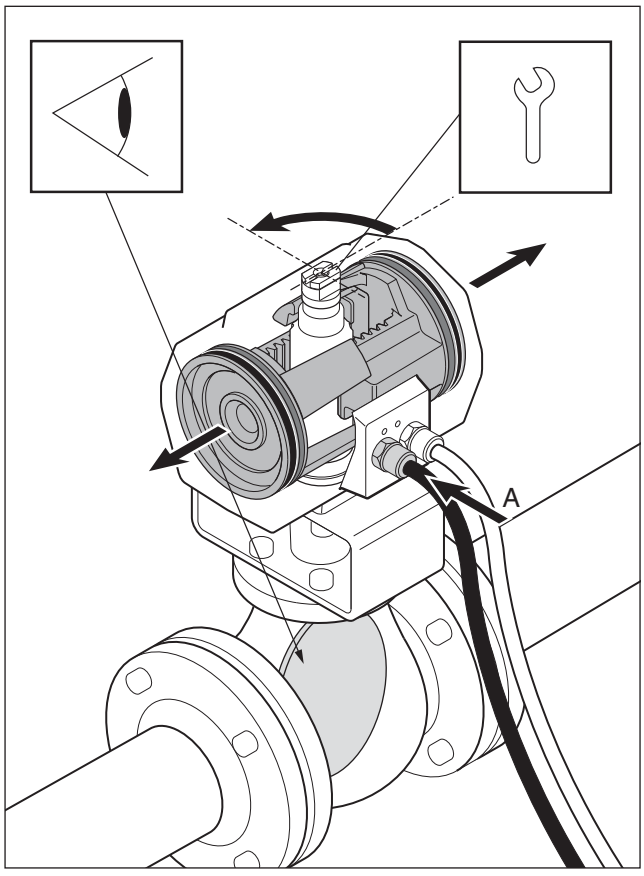

4.2.10

2. Entfernen Sie die Schutzkappen, lockern Sie die Sicherungsschrauben und drehen Sie die Begrenzungsschrauben 4 Umdrehungen heraus (siehe Abb. 4.2.9).
3. Drehen Sie die Antriebswelle, bis sich das Ventil in der gewünschten Position befindet (siehe Abb. 4.2.10). Geben Sie einen geringen Druck auf Anschluß "A" auf. Verwenden Sie zur genauen Positionierung einen Maulschlüssel.

2. Verwijder de moerbeschermkappen, draai de borgmoeren los en draai de slagbegrenzingsbouten 4 omwentelingen naar buiten (zie afb. 4.2.9).
3. Draai de aandrijvingsas, totdat de afsluiter op de gewenste positie staat (zie afb. 4.2.10). Zet een beetje druk op de “A”-poort. Gebruik een steeksleutel voor nauwkeurige positionering.

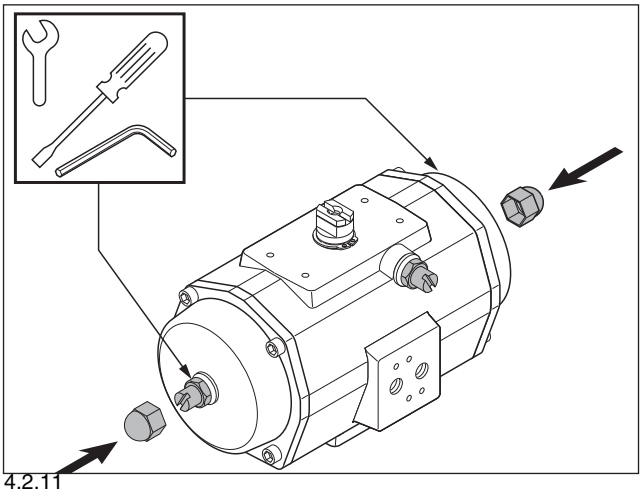

4.2.11

4. Turn in both the limit stop bolts until an obstruction is felt (do not force) and lock the lock nut and place the nut covers (see fig 4.2.11). The outward stroke is now set.
5. Turn actuator shaft until the valve is in the desired position (see fig. 4.2.12).
   Use some pressure on the “B” port.
   Use a wrench for accurate positioning.

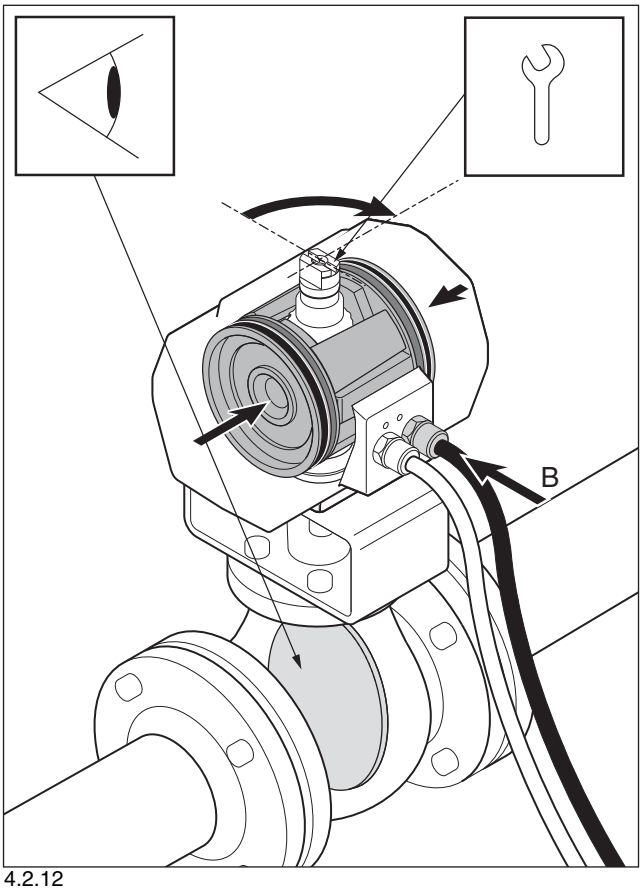

4.2.12

4. Drehen Sie die beiden Begrenzungsschrauben hinein, bis Sie einen Widerstand verspüren (keine übermäßige Kraft aufwenden), verriegeln Sie die Sicherungsmutter und setzen Sie die Schutzkappen wieder auf (siehe Abb. 4.2.11).
   Jetzt ist der Ausfahrhub eingestellt.
5. Drehen Sie die Antriebswelle, bis sich das Ventil in der gewünschten Position befindet (siehe Abb. 4.2.12). Geben Sie einen geringen Druck auf Anschluß "B" auf. Verwenden Sie zur genauen Positionierung einen Maulschlüssel.

4. *Draai de beide slagbegrenzingsbouten naar binnen, totdat u weerstand voelt (gebruik geen kracht), zet de borgmoer vast en plaats de moerbeschermkappen (zie afb. 4.2.11). De buitenwaartse slag is nu ingesteld.*
5. *Draai de aandrijvingsas, totdat de afsluiter op de gewenste positie staat (zie afb. 4.2.12). Zet een beetje druk op de “B”-poort. Gebruik een steeksleutel voor nauwkeurige positionering.*

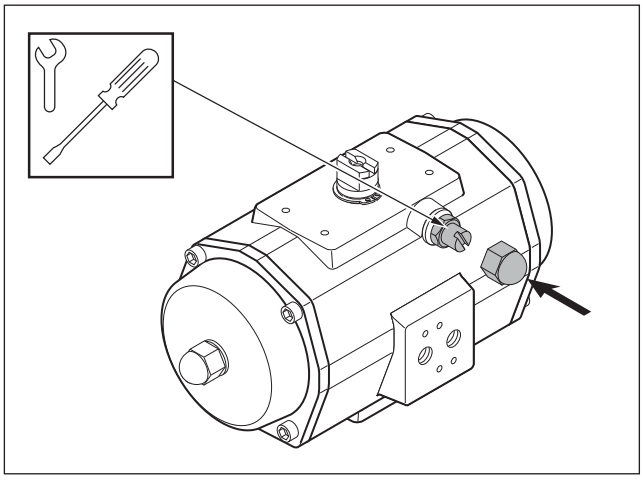

4.2.13

6. Turn in the limit stop bolt until an obstruction is felt (do not force), lock the lock nut and place the nut covers (see fig 4.2.13). The inward stroke is now set.

6. Drehen Sie die Begrenzungsschraube hinein, bis Sie einen Widerstand verspüren (keine übermäßige Kraft aufwenden), verriegeln Sie die Sicherungsmutter und setzen Sie die Schutzkappe wieder auf (siehe Abb. 4.2.13). Jetzt ist der Einfahrhub eingestellt.

6. *Draai de slagbegrenzingsbout naar binnen, totdat u weerstand voelt (gebruik geen kracht), zet de borgmoer vast en plaats de moerbeschermkap (zie afb. 4.2.13).*
De binnenwaartse slag is nu ingesteld.

4.3 Tool table / Werkzeugtabelle / Gereedschapstabel

L1 limit stop bolts (in endcaps)					
Actuator type	**Nut**	**Bolt**	**Actuator type**	**Nut**	**Bolt**
ED25	W 10 mm	AK 3 mm	ED600 / 950	W 24 mm	W 11 mm
ED40 / 65	W 13 mm	AK 4 mm	ED1600	W 30 mm	W 11 mm
ED100 / 150 / 200	W 17 mm	AK 5 mm	PD2500	W 46 mm	W 17 mm
ED350	W 19 mm	AK 6 mm	PD4000	W 46 mm	W 17 mm
ES25 / 40	W 10 mm	SD 1.0x5.5 mm	ES600 / 950	W 24 mm	W 11 mm
ES65 / 100	W 13 mm	SD 1.0x5.5 mm	ES1600	W 30 mm	W 11 mm
ES 150 / 200	W 17 mm	SD 1.2x8.0 mm	PS2500	W 46 mm	W 17 mm
ES350	W 19 mm	SD 1.2x8.0 mm	PS4000	W 46 mm	W 17 mm
DSA Limit stop bolt (above air connection interface)					
Actuator type	**Nut**	**Bolt**	**Actuator type**	**Nut**	**Bolt**
E25	W 10 mm	SD 1.0x5.5 mm	E200 / 350	W 19 mm	SD 1.2x8.0 mm
E40 / 65	W 13 mm	SD 1.0x5.5 mm	E600 / 950	W 24 mm	W 11 mm
E100 / 150	W 17 mm	SD 1.2x8.0 mm	E1600	W 30 mm	W 11 mm

Limit stop bolt	: Hubbegrenzungsschraube	: Slagbegrenzingbout
Endcap	: Endkappe	: Deksel
Actuator type	: Antriebstyp	: Type aandrijving
Nut	: Mutter	: Moer
Bolt	: Schraube	: Schroef
AK = Allen key	: AK = Innensechskantschraube	: AK = Imbus sleutel
SD = Screwdriver	: SD = Schraubendreher	: SD = Schroevendraaier
W = Wrench	: W = Maulschlüssel	: W = Sleutel

5 DISASSEMBLY / DEMONTAGE / *DEMONTEREN*

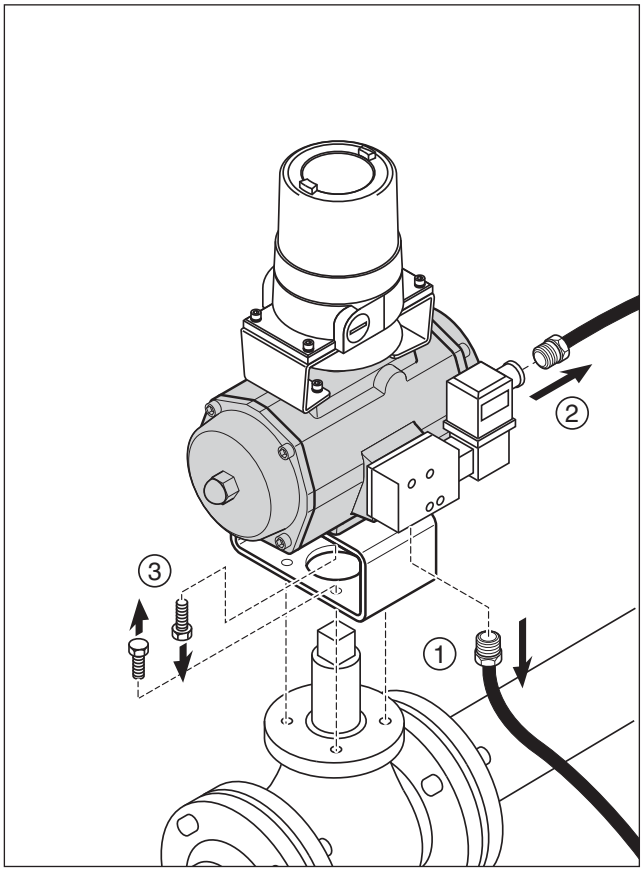

5.1.1

5.1 Before starting

5.1.1

Caution! Never disassemble a valve that is under pressure!

Caution! Ball valves and plug valves can trap pressurized media in the cavity. Isolate the piping system in which the actuator valve assembly is mounted and relieve any pressure on the valve.

5.1 Vor der Demontage

5.1.1

Achtung! Niemals eine unter Druck stehende Armatur demontieren!

Achtung! Kugel- und Kükenhähne können das Druckmedium in der Kammer einschließen. Das Rohr system, in das das Stellglied eingebaut ist, ist drucklos zu machen, um den an der Armatur anliegenden Restdruck zu entspannen.

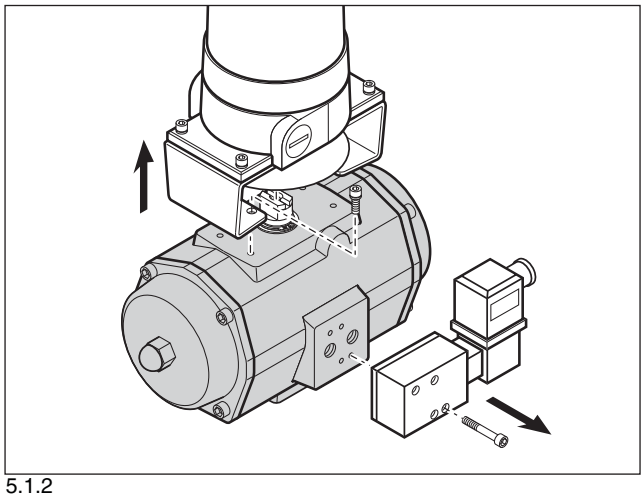
5.1.2

4.1 Alvorens te beginnen

5.1.1

Voorzichtig! Demonteer nooit een afsluiter die onder druk staat!

Voorzichtig! Kogelafsluiters en plugafsluiters kunnen drukmedia in de kamer vasthouden. Isoleer het buizenstelsel, waarin de aandrijving en afsluiter zijn gemonteerd, en haal de druk van de afsluiter.

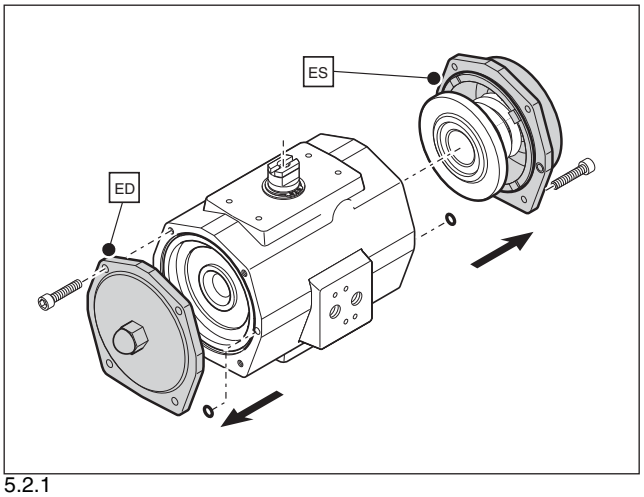

5.2.1

5.2 Removing endcaps type ES/ED 25 to ES/ED 350

5.2.1 / 5.2.2 / 5.2.3

Be careful not to damage the endcap O-rings.

Caution! If the actuator is a "spring return" model, uniformly loosen all endcaps screws, two to three turns at a time, in sequence, to relieve pre-load of the springs. On all actuators with springs use caution when removing endcaps.

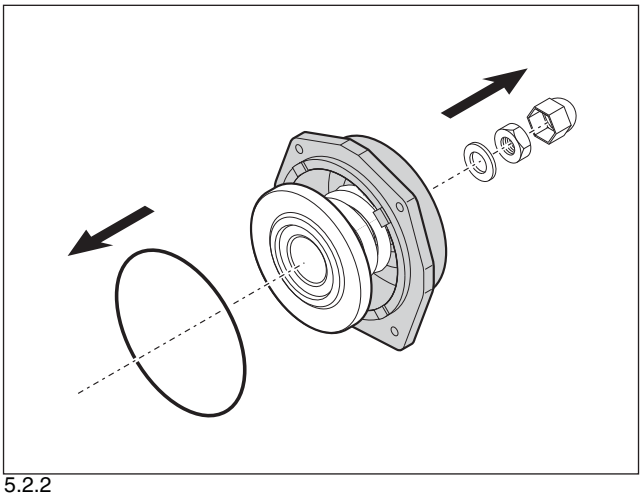
5.2.2

5.2 Endkappen Typ ES/ED 25 bis ES/ED 350 ausbauen

Beim Ausbauen darauf achten, daß die O-Ringe der Endkappen nicht beschädigt werden.

Achtung! Wenn es sich beim Antrieb um ein Typ mit Federrückstellung handelt, alle Endkappenschrauben gleichmäßig lösen. Jeweils immer nurzwei bis drei Schraubendrehungen gleichzeitig und nacheinander, um die Vorspannung der Federn zu senken. Seien Sie bei federrückstellenden Antrieben während der Demontage der Endkappen besonders vorsichtig.

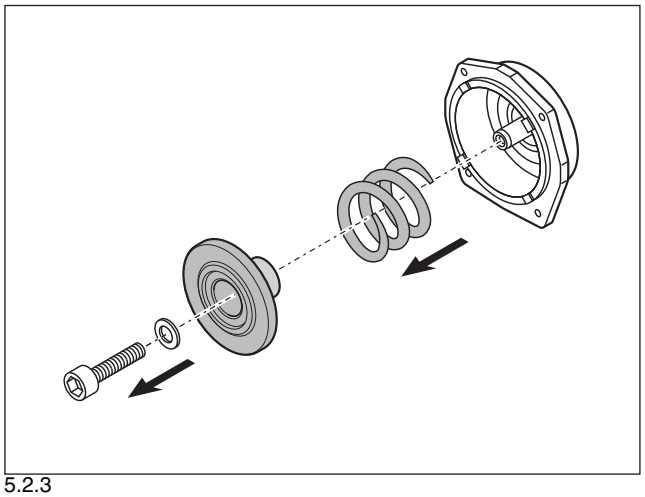
5.2.3

5.2 Deksels verwijderen type ES/ED 25 tot ES/ED 350

Let erop dat u de O-ringen van de sluitkap niet beschadigt.

Voorzichtig! Als de aandrijving een “veerretour”-model is: draai alle schroeven van de deksels gelijkmatig los, twee tot drie slagen per keer en kruislings, om de voorspanning van de veren af te halen.
Wees bij alle aandrijvingen met veren voorzichtig bij het verwijderen van deksels.

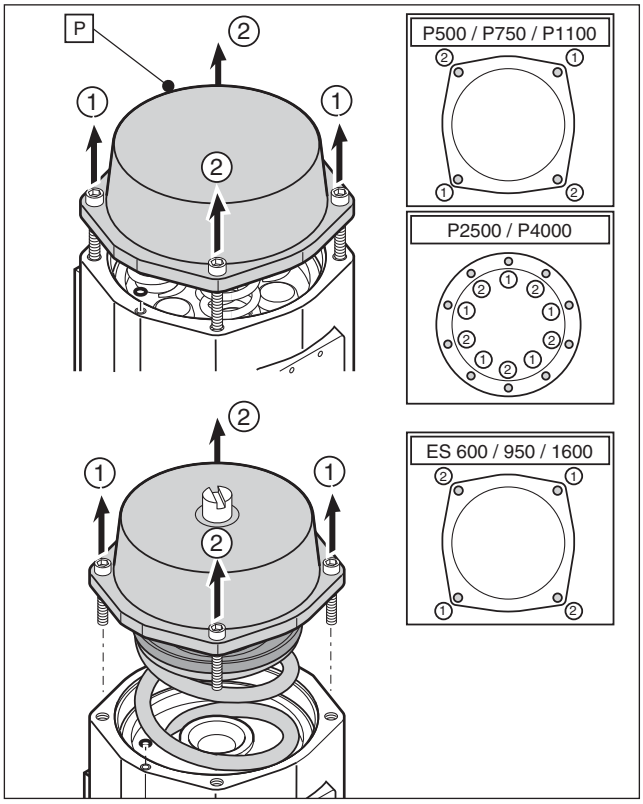

5.3.1

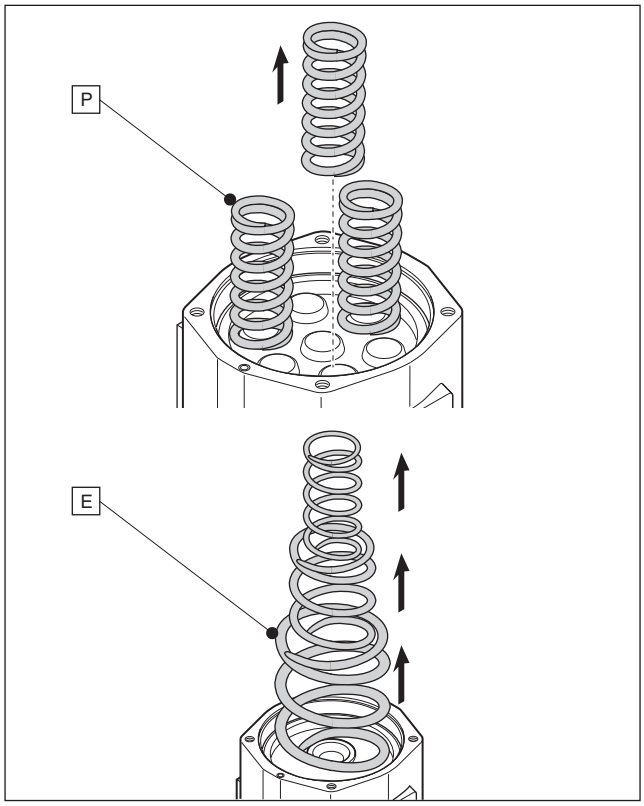

5.3.2

5.3 Removing endcaps type PE/PS and ES 600 to 1600

5.3.1 / 5.3.2

Caution! If the actuator is a "spring return" model, first loosen screws 1, then uniformly loosen all endcap screws 2, two to three turns at a time, in sequence, to relieve pre-load of the springs.
On all actuators with springs use caution when removing endcaps.

5.3 Endkappen Typ PE/PS und ES 600 bis 1600 ausbauen

Achtung! Wenn es sich beim Antrieb um ein Typ mit Federrückstellung handelt, zuerst die Schrauben mit der Nummer 1 lösen, danach gleichmäßig alle Endkappenschrauben mit der Nummer 2 lösen. Dabei jeweils immer nur zwei bis drei Schraubendrehungen gleichzeitig und nacheinander, um die Vorspannung der Federn zu senken.
Seien Sie bei federrückstellenden Antrieben während der Demontage der Endkappen besonders vorsichtig.

5.3 Deksels verwijderen type PE/PS en ES 600 tot 1600

***Voorzichtig**! Als de aandrijving een "veerretour"-model is: draai eerst schroeven 1 los, draai vervolgens alle schroeven 2 van de deksels gelijkmatig los, twee tot drie slagen per keer en kruislings, om de voorspanning van de veren af te halen.*
Wees bij alle aandrijvingen met veren voorzichtig bij het verwijderen van deksels.

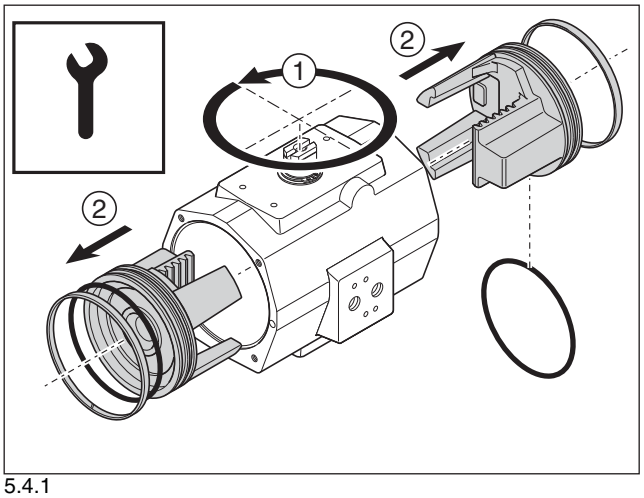

5.4.1

5.4 Removing Pistons/Spindle, E- and P-series

5.4.1

The two pistons can now be removed by rotating the actuator shaft.

5.4.2

In case of a DSA actuator first remove the DSA-cam through the bore of the housing.
Then take out the shaft.

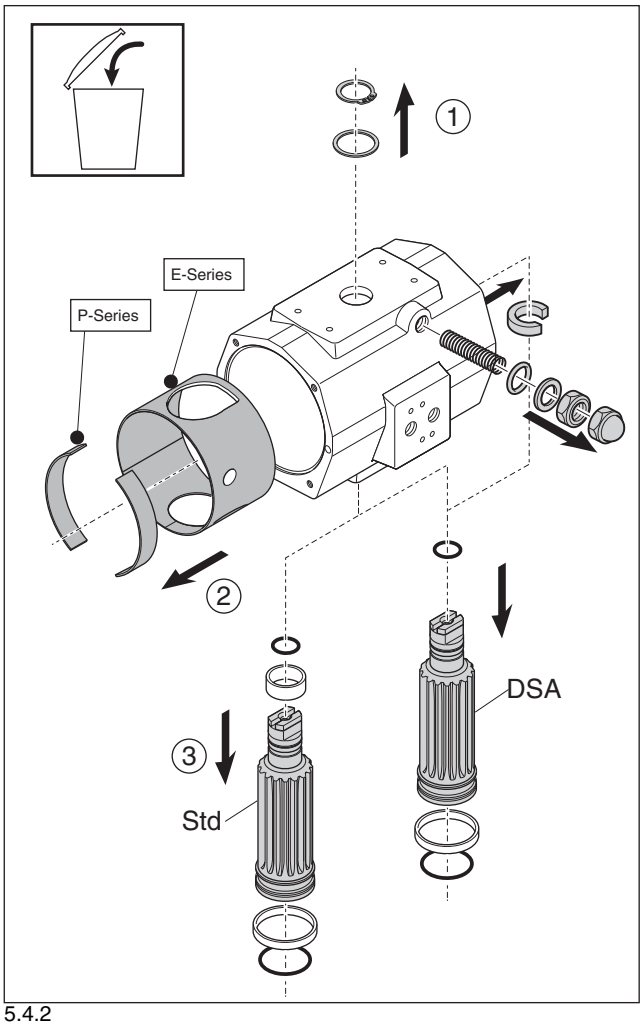

5.4.2

5.4 Kolben/Wellen, E- und P-Serie, ausbauen

5.4.1

Die beiden Kolben werden nun durch Drehen der Antriebswelle ausgebaut.

5.4.2

Bei einem DSA Antrieb zuerst den DSA-Nocken durch die Bohrung des Gehäuses entfernen. Dann die Welle herausnehmen.

5.4 Zuigers/spindel verwijderen, E- en P-serie

5.4.1

De twee zuigers kunnen nu verwijderd worden door de as van de stelaandrijving te draaien.

5.4.2

In geval van een DSA aandrijving eerst de DSA-nok verwijderen door de boring van het huis.
Dan de as verwijderen.

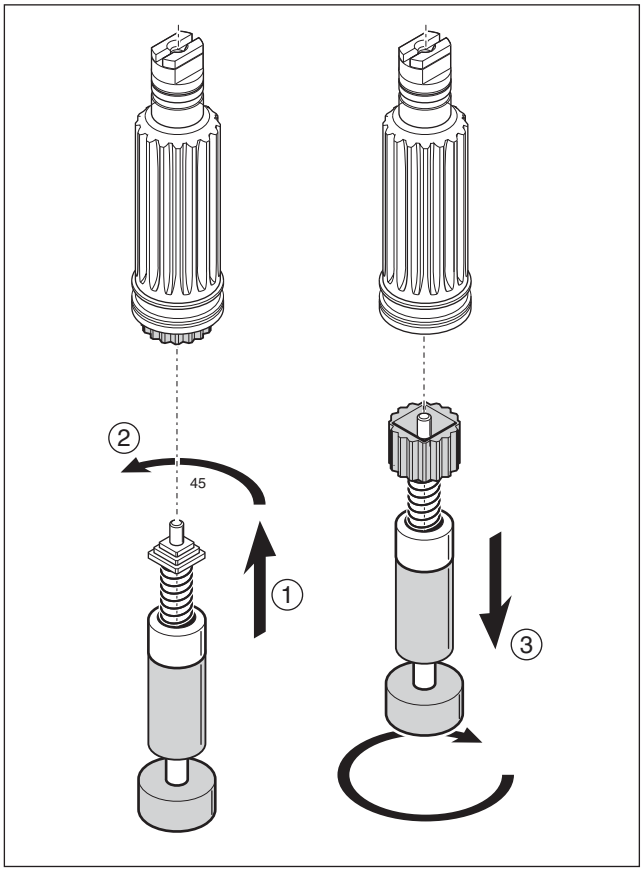

5.5.1

5.5 Removing insert

5.5.1

Insert removal requires the use of the extractor part No. 590.00.001 for square sizes 11, 14 and 17.
Part No 590.00.002 is used for square sizes 19, 22 and 27.

5.5 Insert ausbauen

Für den Ausbau der Inserts benötigen Sie das Werkzeug Artikelnr. 590.00.001 für die Vierkantgrößen 11, 14 und 17.
Werkzeug Artikelnr. 590.00.002 wird für die Vierkantgrößen 19, 22 und 27 benötigt.

5.5 Insert verwijderen

Om de insert te verwijderen moet u gebruik maken van de extractor art.nr. 590.00.001 voor vierkantafmetingen 11, 14 en 17.
Art.nr. 590.00.002 wordt gebruikt voor vierkantafmetingen 19, 22 en 27.

6 REASSEMBLY / ZUSAMMENBAU / *OPNIEUW MONTEREN*

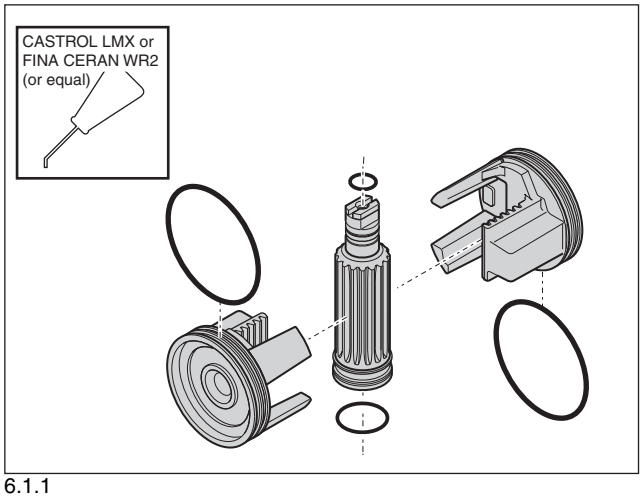

6.1.1

6.1 Reassembly guide band and shaft

Before reassembly check the requested assembly code (see chapter 4).

6.1.1

Apply a light film of grease to all O-Rings and on the gear teeth.

6.1.3

In case of a DSA actuator mount the DSA-cam through the bore of the housing on top of the shaft.

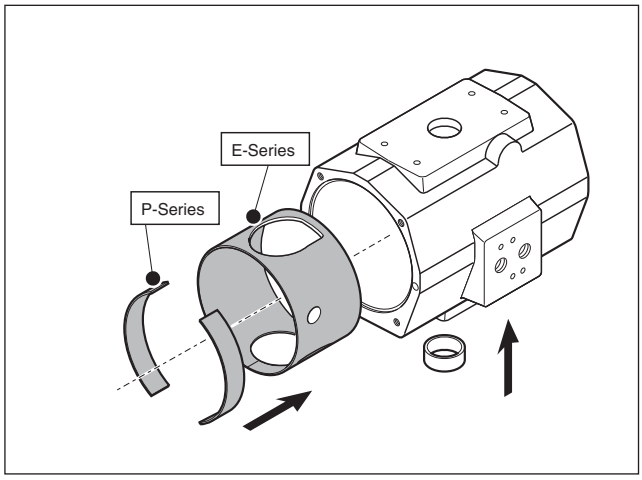

6.1.2

6.1 Zusammenbau von Führungsband und Antriebswelle

Kontrollieren Sie vor dem Zusammenbau den gewünschten Aufbaucode (siehe Kapitel 4)!

6.1.1

Alle O-Ringe und Verzahnungen einfetten.

6.1.3

Bei einem DSA Antrieb den DSA-Nocken durch die Bohrung des Gehäuses auf der Welle montieren.

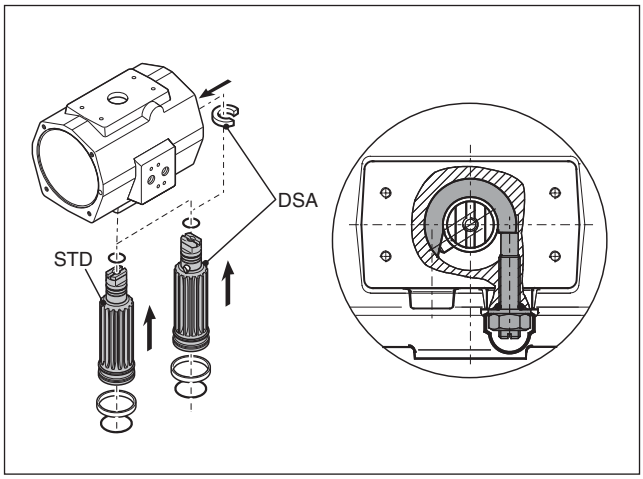

6.1.3

6.1 Opnieuw monteren van geleideband en as

Kontroleer voor het opnieuw monteren de gewenste montagecode (zie hoofdstuk 4).

6.1.1

Breng op alle O-ringen en de tanden van de overbrenging een dunne laag smeervet aan

6.1.3

In geval van een DSA aandrijving de DSA-nok door de boring van het huis op de as monteren.

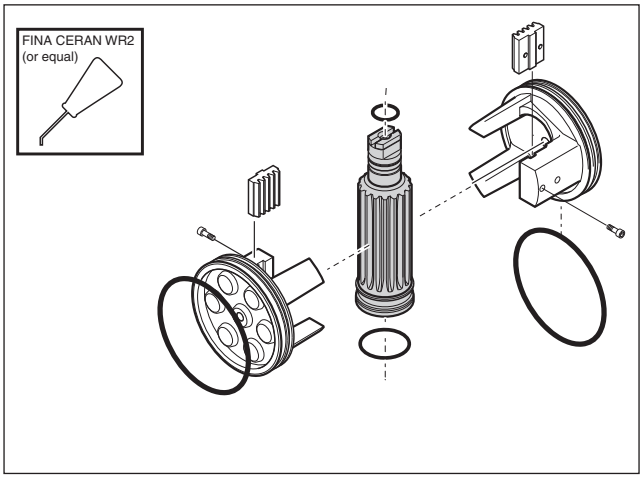

6.2.1

6.2 Reassembly pistons

6.2.1

Align the pinion gear so that the teeth on the center gear will “pick-up” the pistons assembly’s rack teeth when turning the top extension of the center gear clockwise (CW) or counter clockwise (CCW) according assembly code (see page 9).

6.2.3

Ensure that smooth movement and 90 degree operation can occur without moving the pistons out of the actuator body.

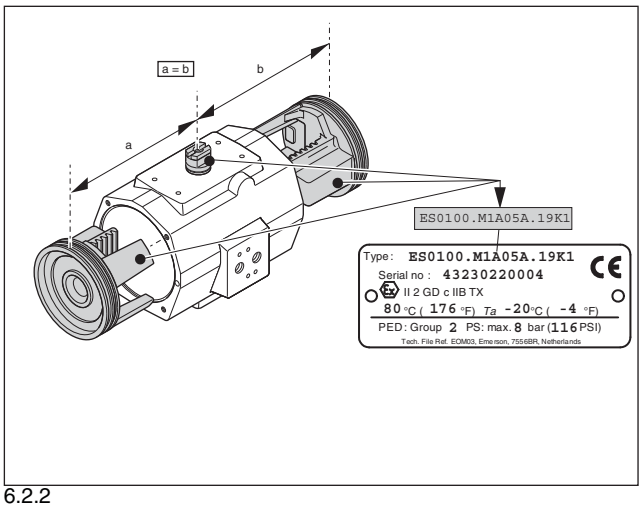

6.2.2

6.2 Zusammenbau von Kolben

6.2.1

Die verzahnte Welle so ausrichten, daß die Zähne die Innenverzahnung die beiden Kolben erfaßt, wobei das obere Wellenende entweder im Uhrzeigersinn oder gegen den Uhrzeigersinn (je nach Aufbaucode, siehe Seite 9) gedreht wird. Beachten Sie bitte, daß die Schlüsselfläche bzw. Nut am oberen Wellenende entweder parallel oder um 90° versetzt um Antrieb steht.

6.2.3

Beachten Sie, daß eine reibungslose Bewegung im 90°-Winkel möglich ist, ohne daß dabei die Kolben aus dem Antriebsgehäuse herausragen.

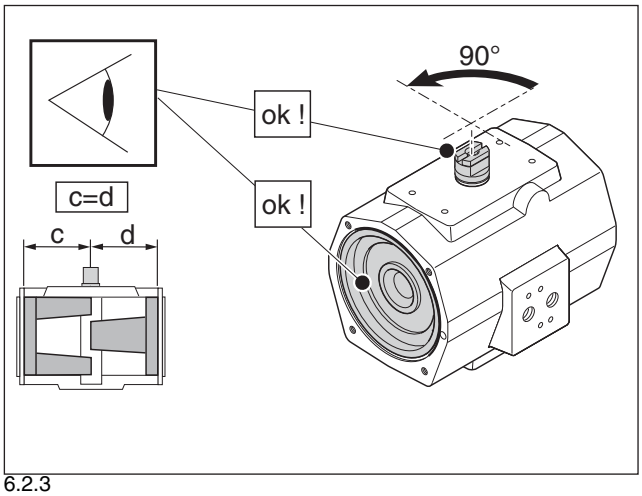

6.2.3

6.2 Opnieuw monteren van zuigers

6.2.1

Richt de tandoverbrenging zodanig uit dat de tanden op de as de heugeltanden van de zuiger zullen “oppakken”, als het bovenstuk van de as met de wijzers van de klok mee of tegen de klok in wordt gedraaid naar gelang de montage code (zie pagina 9).

6.2.3

Controleer op een soepele beweging en een verdraaiing van 90 graden, zonder dat de zuigers uit de behuizing van de aandrijving naar buiten komen.

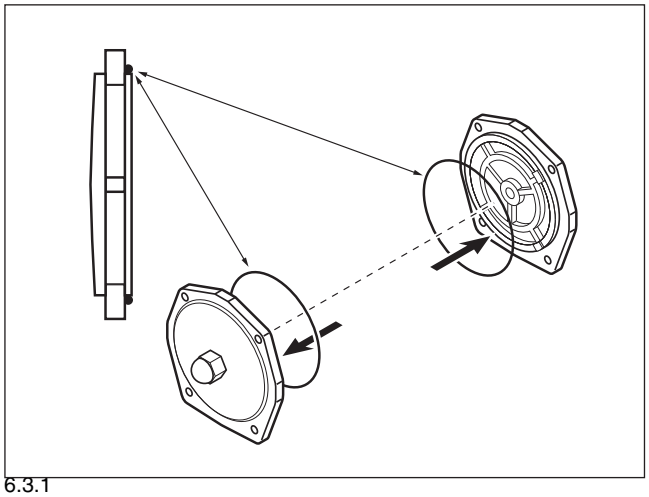

6.3.1

6.3 Reassembly endcaps double acting actuators

6.3.2

Ensure that endcap O-rings (A) and airport O-rings (B) are in place on both sides.

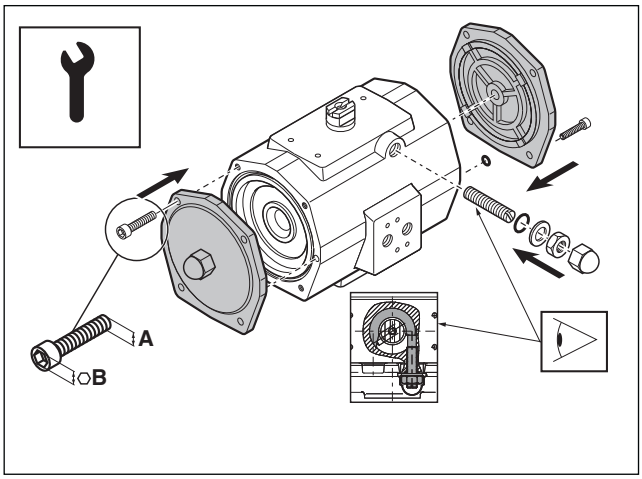

6.3.2

6.3 Zusammenbau Endkappen doppeltwirkende Antriebe

Beachten Sie, daß die O-Ringe der Endkappen (A) und Luftzufuhröffnungen (B) auf beiden Seiten eingesetzt werden.

6.3 Opnieuw monteren deksels van dubbelwerkende aandrijvingen

Plaats de O-ringen van de deksels (A) en de O-ringen van de luchtpoorten (B) aan beide zijden.

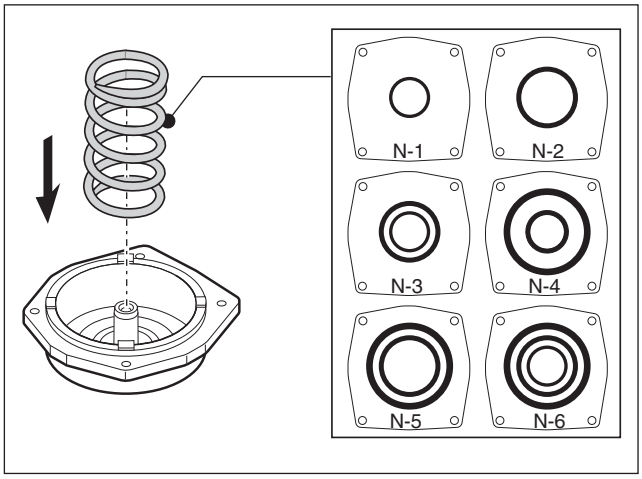

6.4.1

6.4 Reassembly endcaps single acting actuators ES25 - ES350

6.4.1
When replacing springs in a spring return actuator, ensure that the springs are replaced in their identical position in the spring pack from where they were removed.

6.4.3
Ensure that endcap O-rings and airport O-rings are in place on both sides.

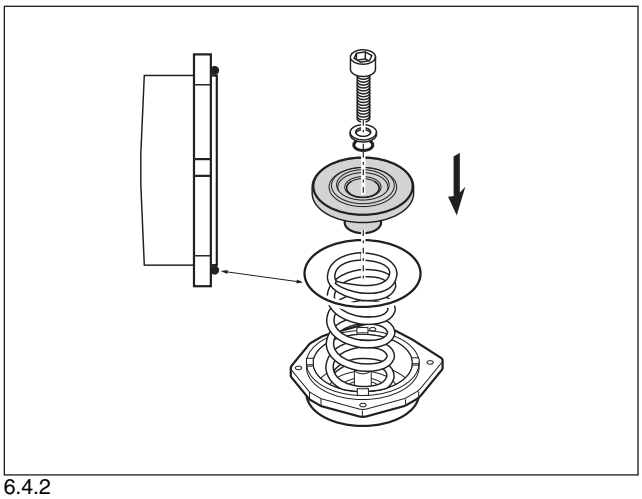
6.4.2

6.4 Zusammenbau Endkappen einfachwirkende Antriebe ES25 - ES350

6.4.1
Beachten Sie beim Wechseln der Federn im Antrieb mit Federrückstellung, daß die Fe-dern an ihrem ursprünglichen Platz eingebaut werden.

6.4.3
Beachten Sie, daß die O-Ringe der Endkappen und Luftzufuhröffnungen auf beiden Seiten eingesetzt werden.

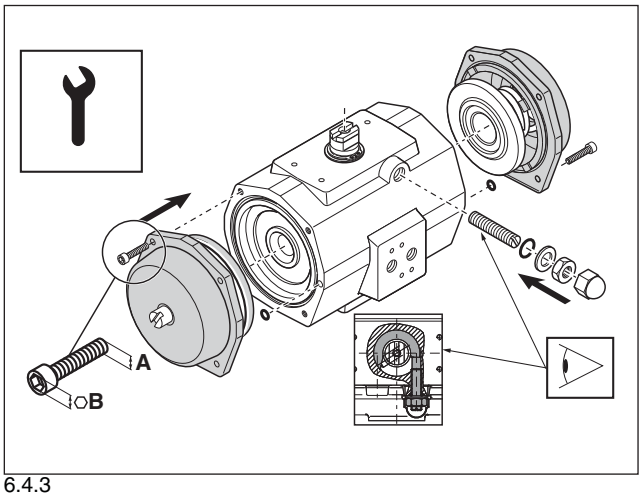

6.4.3

6.4 Opnieuw monteren deksels van enkelwerkende aandrijvingen ES25 - ES350

6.4.1
Zorg er bij het vervangen van veren in een veerretour-aandrijving voor dat de veren op exact dezelfde plaats in het verenpakket worden geplaatst, waar ze zijn verwijderd.

6.4.3
Plaats de O-ringen van de deksels en de O-ringen van de luchtpoorten aan beide zijden.

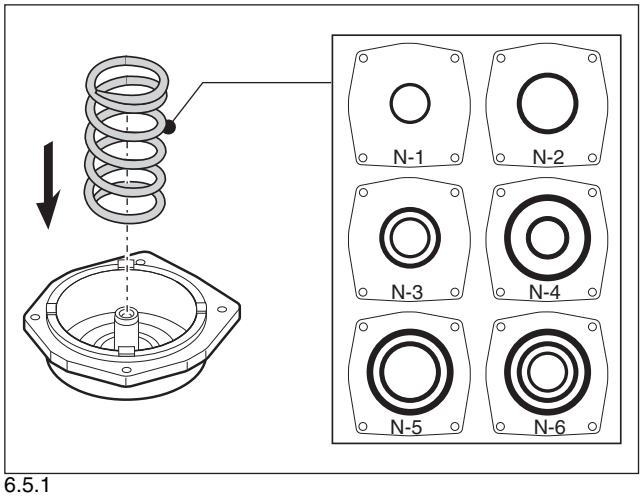

6.5.1

6.5 Reassembly endcaps single acting actuators ES600 - PS4000

6.5.1 / 6.5.2 / 6.5.3

When replacing springs in a spring return actuator, ensure that the springs are replaced in their identical position in the endcap from where they were removed. Before assembling the springs and endcaps, make sure that the pistons are pushed inside the body.

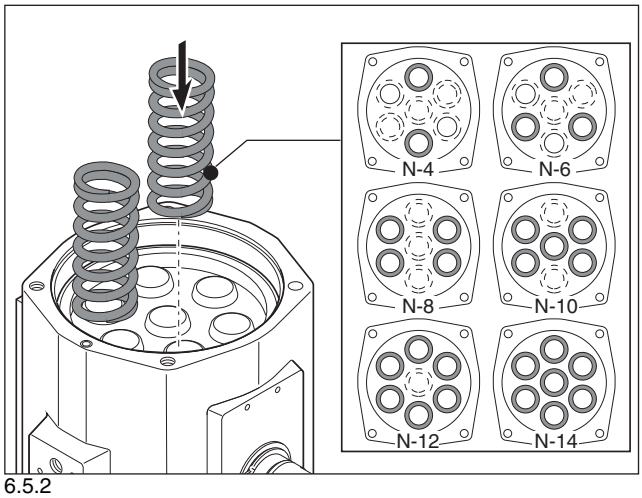

6.5.2

6.5 Zusammenbau Endkappen einfachwirkende Antriebe ES600 - PS4000

6.5.1 / 6.5.2 / 6.5.3

Beachten Sie, beim Wechsel der Federn im Antrieb mit Federrückstellung, daß die Federn an ihrem ursprünglichen Platz in der Endkappe eingebaut werden. Beachten Sie vor der Montage der Federn und Endkappen, daß die Kolben in den Antrieb hineingedrückt wurden.

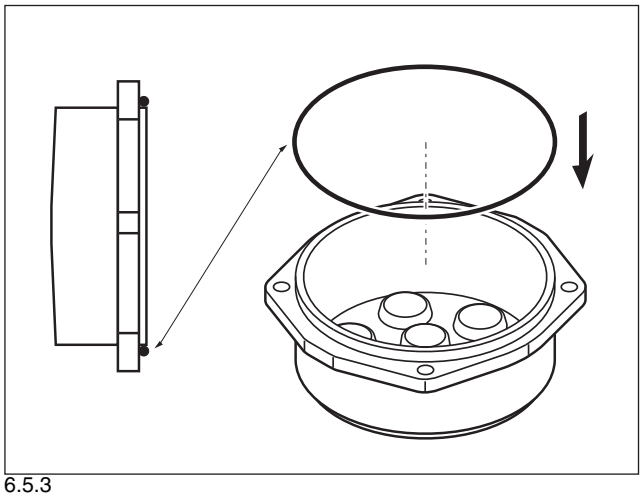

6.5.3

6.5 Opnieuw monteren deksels van enkelwerkende aandrijvingen ES600 - PS4000

6.5.1 / 6.5.2 / 6.5.3

Zorg er bij het vervangen van veren in een veerretour-aandrijving voor dat de veren op exact dezelfde plaats in de deksel worden geplaatst, waar ze zijn verwijderd. Zorg ervoor dat de zuigers naar binnen zijn, voordat u de veren en deksels monteert.

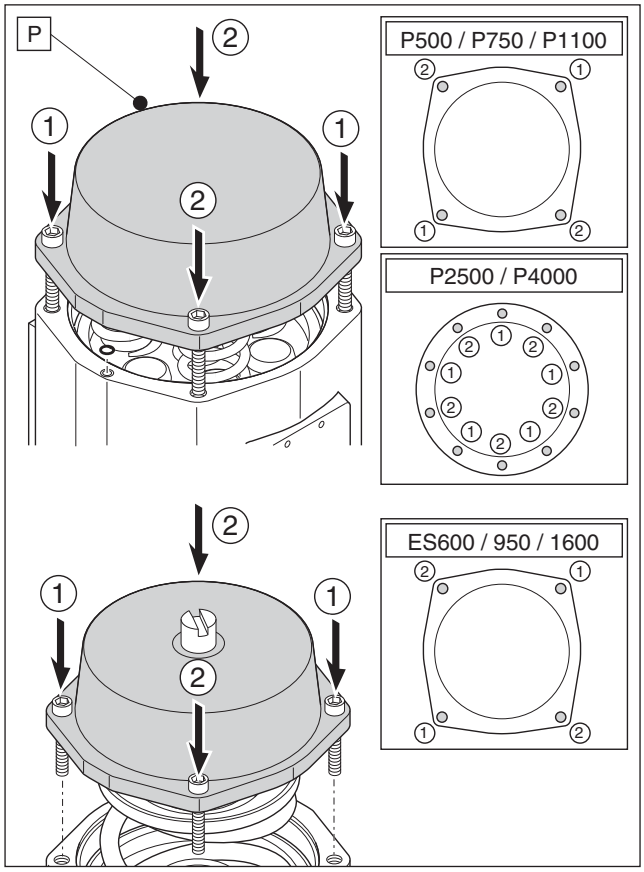

6.5.4

6.5.4

Engage the bolts with the tapped holes in the actuator body by forcing down slightly on the cap. Tighten each bolt in small and equal turns.

6.5.4

Die Schrauben mit leichtem Druck auf die Endkappe in die Gewindelöcher des Antriebsgehäuses einführen. Jede Schraube mit kurzen und gleichen Schraubendrehungen abwechselnd festschrauben.

6.5.4

Plaats de bouten in de schroefgaten in de behuizing van de aandrijving door de kap lichtjes naar beneden te drukken. Draai elke bout met kleine en gelijkmatige bewegingen vast.

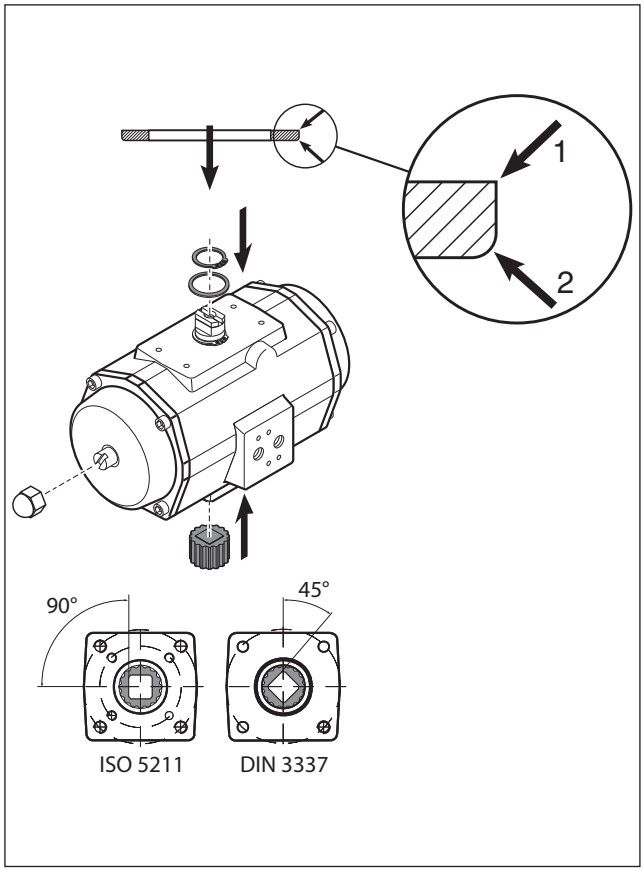

6.6.1

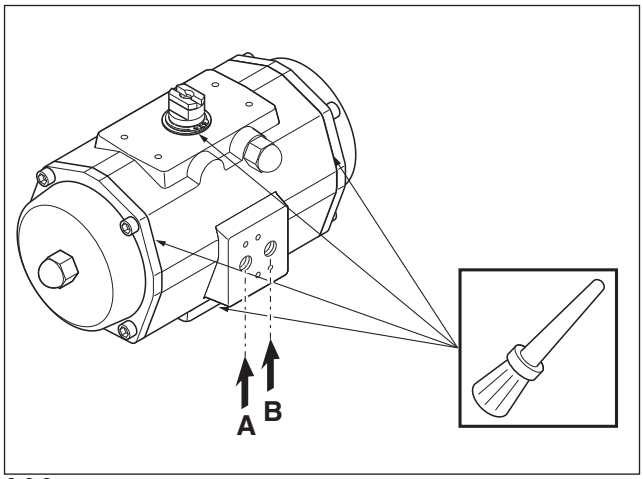

6.6.2

6.6 Reassembly of springclip and insert

6.6.1

Install the new circlip onto its mating groove on the top shaft extension and with the non sharp edge (2) towards the housing and the sharp edge (1) towards the top of the shaft.

Check proper functioning by applying pressure to the A-port or B-port (see chapter 3).

6.6.2

Apply pressure to the A-port and use some soapsuds around shaft top and shaft bottom to check for air leakage. Apply pressure to the B-port and use some soapsuds around the endcaps to check for air leakage.

6.6 Zusammenbau von Seegerring und Insert

6.6.1

Den neuen Sicherungsring auf die dafür vorgesehene Rille am oberen Wellenende montieren und mit dem nicht scharfen Kante (2) in Richtung des Gehäuses und mit dem scharfen Kante (1) in Richtung oberen Wellenende.

Kontrollieren Sie die richtige Funktion des Antriebs durch anschliessen von Zuluft am Anschluß A und / oder B (siehe Kapitel 3).

6.6.2

Schließen Sie die Luftzufuhr am Anschluß A an und und verwenden Sie Seifenwasser an der Wellenoberseite und Wellenunterseite zur Kontrolle der Luftdichtigkeit. Schließen Sie am Anschluß B die Zuluft an und verwenden Sie Seifenwasser an den Endkappen zur Kontrolle der Luftdichtigkeit.

6.6 Opnieuw monteren van Seegerring en insert

6.6.1

Installeer de nieuwe veerring in de corresponderende groef op de astop en met de niet scherpe rand (2) richting de behuizing en de scherpe rand (1) richting de astop.

Kontroleer het juist functioneren door luchtdruk aan te sluiten op de A-poort of de B-poort (zie hoofdstuk 3).

6.6.2

Zet luchtdruk op de A-poort en gebruik zeepsop rond as-top en as-einde voor kontrole van de luchtdichtheid. Zet luchtdruk op de B-poort en gebruik zeepsop rond de deksels voor kontrole van de luchtdichtheid.

7 *PARTS LIST* / STÜCKLISTE / STUKLIJSTEN

7.1 E-serie

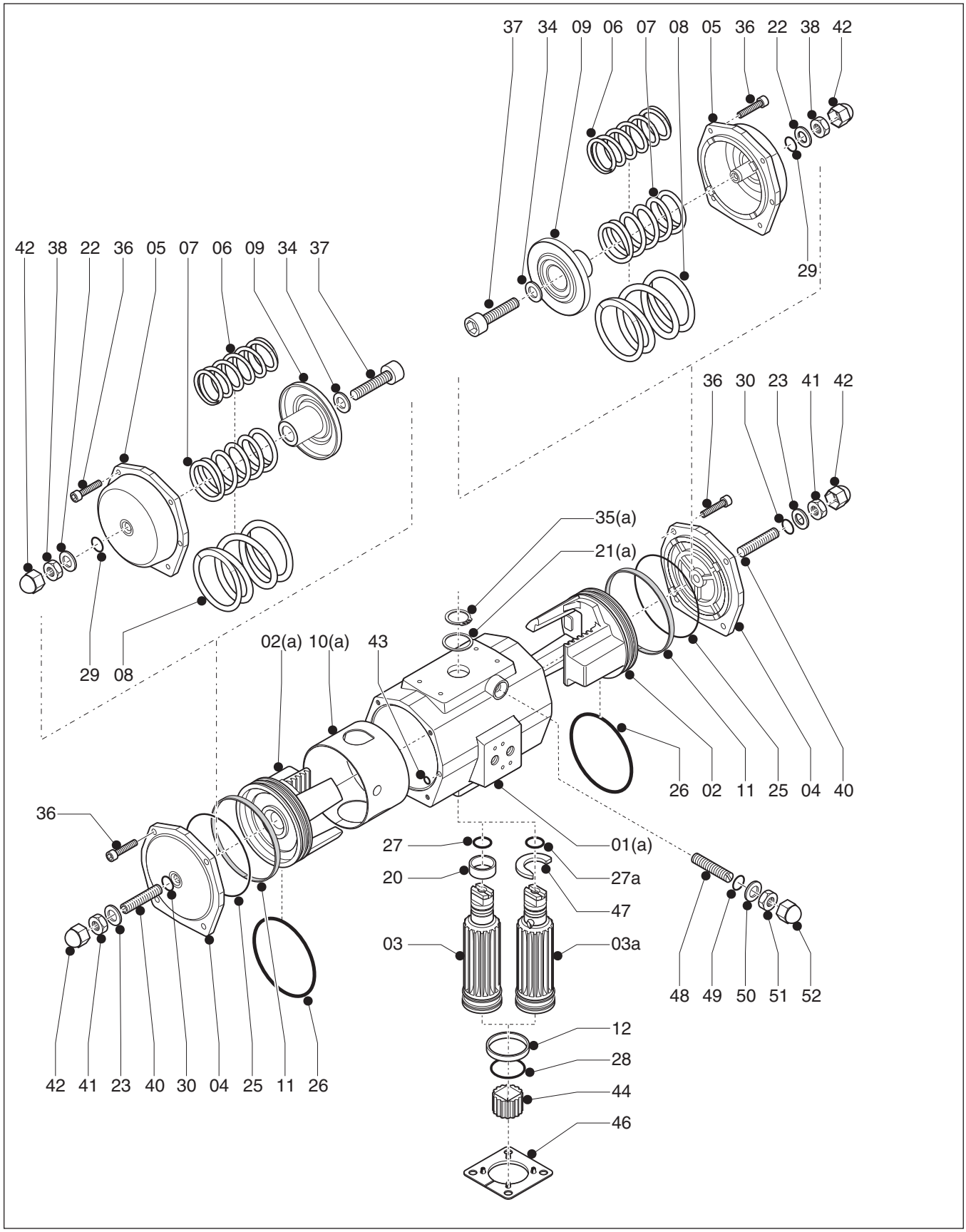

Pos.	Qty. St.Z. Aant.	Description	Bezeichnung	Benaming	Specification Spezifikation Specificatie
1	1	Body	Gehäuse	Behuizing	GAlSi10Mg, DIN 1725/2
1a	1	Body DSA	Gehäuse DSA	Behuizing DSA	GAlSi10Mg, DIN 1725/2
2	1	Piston	Kolben	Zuiger	GAlSi7Mg, DIN 1725/2
2a	1	Piston DSA	Kolben DSA	Zuiger DSA	GAlSi7Mg, DIN 1725/2
3	1	Drive Shaft	Antriebswelle	Aandrijfas	AlZnMGCu1.5, DIN 1725/1
3a	1	Drive Shaft DSA	Antriebswelle DSA	Aandrijfas DSA	AlZnMGCu1.5, DIN 1725/1
4	2	End Cap ED	Endkappe ED	Deksel ED	GDAlSi9Cu3, DIN1725/2
5	2	End Cap ES	Endkappe ES	Deksel ES	GDAlSi9Cu3, DIN 725/2
6	2	Spring-inner	Innenfeder	Veer binnen	Class C, DIN 17223
7	2	Spring-mid	Mittelfeder	Veer midden	Class C, DIN 17223
8	2	Spring-outer	Außenfeder	Veer buiten	Class C, DIN 17223
9	2	Spring Holder	Federhalter	Veerhouder	C45, DIN 17200
10*	1	Guide Band	Führungsband	Geleideband	PA66 + MoS2
10a*	1	Guide Band DSA	Führungsband DSA	Geleideband DSA	PA66 + MoS2
11*	2	Guide Band	Führungsband	Geleideband	PTFE + 2596 C
12*	1	Bearing Bush	Lagerbuchse	Lagerbus	PA66 + MoS2
20*	1	Bearing Bush	Lagerbuchse	Lagerbus	POM
21*	1	Washer	Unterlegscheibe	Afdichtring	POM
21a*	1	Washer DSA	Unterlegscheibe DSA	Afdichtring DSA	POM
22*	2	Washer ES	Unterlegscheibe ES	Sluitplaat ES	PA6
23*	2	Washer ED	Unterlegscheibe ED	Sluitplaat ED	PA6
25*	2	O-Ring	O-Ring	O-ring	Buna N
26*	2	O-Ring	O-Ring	O-ring	Buna N
27*	1	O-Ring	O-Ring	O-ring	Buna N
27a*	1	O-Ring DSA	O-Ring DSA	O-ring DSA	Buna N
28*	1	O-Ring	O-Ring	O-ring	Buna N
29*	4	O-Ring	O-Ring	O-ring	Buna N
30*	2	O-Ring	O-Ring	O-ring	Buna N
34	2	Washer ES	Unterlegscheibe ES	Afdichtring ES	C35
35*	1	Spring Clip	Seegerring	Seegerring	Ck75, DIN 17222
35a*	1	Spring Clip DSA	Seegerring DSA	Seegerring DSA	Ck75, DIN 17222
36	8	End Cap bolt ED/ES	Endkappenschraube ED/ES	Bout deksel ED/ES	AISI 304
37	2	Limit Stop Bolt ES	Begrenzungsschraube ES	Bout slagbegrenzing ES	AISI 304
38	2	Nut	Mutter	Moer	AISI 304
40	2	Limit Stop bolt ED	Begrenzungsschraube ED	Bout slagbegrenzing ED	AISI 304
41	2	Nut	Mutter	Moer	AISI 304
42	2	Nut cover	Schutzkappe	Moerbeschermkap	PE
43*	2	O-Ring	O-Ring	O-ring	Buna N
44	1	Insert	Insert	Inzetstuk	AlMgSi 1
46	1	Centre-plate (option for DIN3337 actuators)	Zentrierplatte (Option für DIN3337 Antriebe	Centreerplaat (optie voor DIN3337)	PA6 + 25% Glass
47	1	Cam for stroke adj. DSA	Hubbegrenzungsnocken DSA	Slagbegrenzingsnok DSA	AISI 304
48	1	Limit Stop bolt DSA	Begrenzungsschraube DSA	Bout slagbegrenzing DSA	AISI 304
49*	1	O-Ring DSA	O-Ring DSA	O-ring DSA	Buna N
50*	1	Washer DSA	Unterlegscheibe DSA	Sluitplaat DSA	PA6
51	1	Nut DSA	Mutter DSA	Moer DSA	AISI 304
52	1	Nut cover DSA	Schutzkappe DSA	Moerbeschermkap DSA	PE

* Recommended Spare Parts (contained in Repair Kit or Repair Kit DSA).
The extra or specific parts of a DSA actuator are marked “DSA”.

* Empfohlene Ersatzteile (Teil des Reparatursatzes oder Reparatursats für DSA)
Die zusätzlichen oder spezifischen Teile eines DSA-Antriebs sind mit der Kennzeichnung “DSA”angegeben.

* Aanbevolen reserve-onderdelen (opgenomen in reparatiepakket of reparatiepakket DSA).
De extra of specifieke delen van een DSA aandrijving zijn gemerkt met “DSA”.

7.2 P-serie

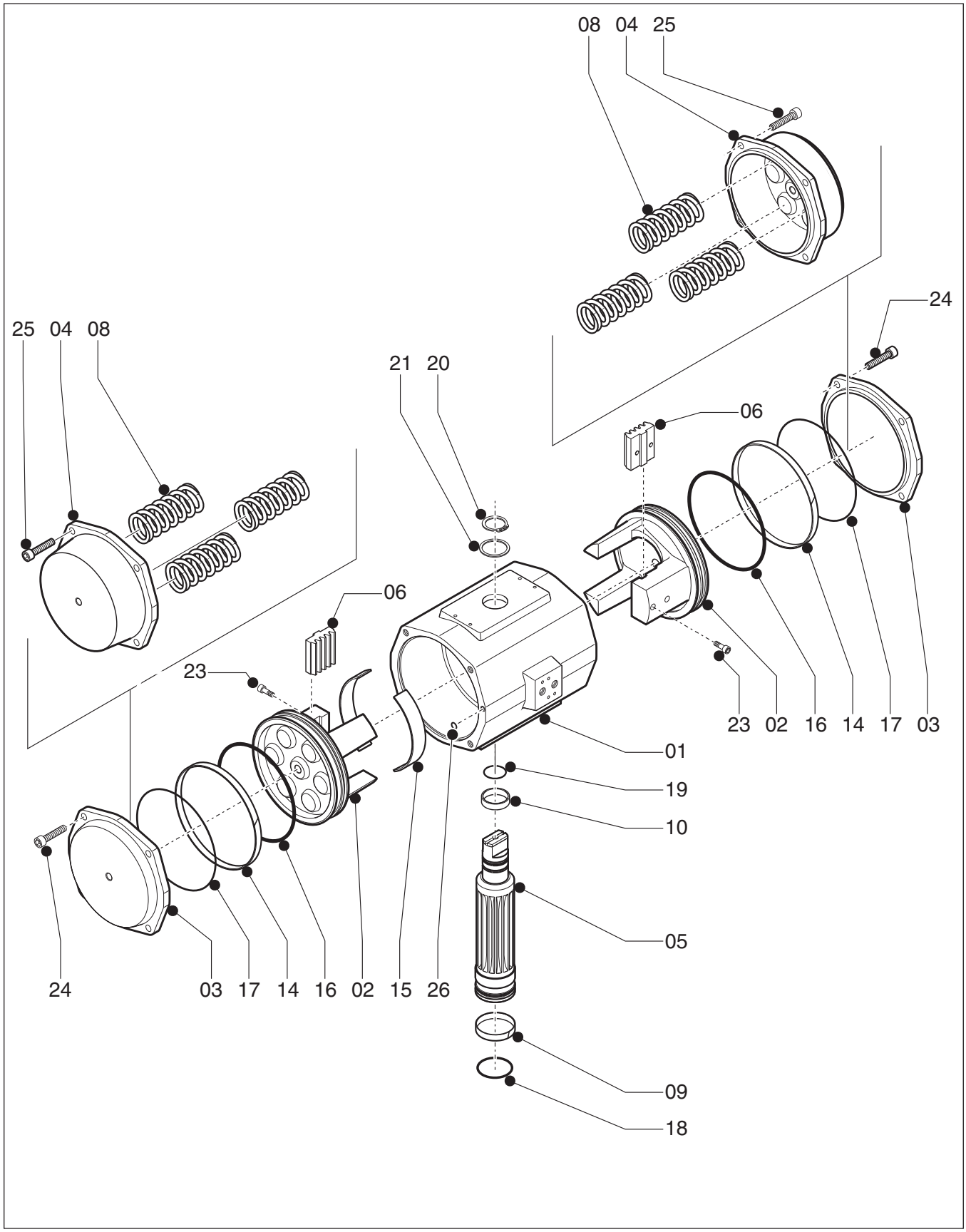
08 04 25
24
25 04 08
21 20
06
06
23
23 02 16 14 17 03
01
19
10
05
24 03 17 14 16 02 15 26
09
18

Pos.	Qty. St.Z. Aant.	Description	Bezeichnung	Benaming	Specification Spezifikation Specificatie
1	1	Body	Gehäuse	Behuizing	GAlSi10Mg, DIN 1725/2
2	2	Piston	Kolben	Zuiger	GAlSi7Mg, DIN 1725/2
3	2	End Cap PD	Endkappe PD	Deksel PD	GAlSi10Mg, DIN 1725/2
4	2	End Cap PE	Endkappe PE	Deksel PE	GAlSi10Mg, DIN 1725/2
5	1	Central drive shaft	Antriebswelle	Aandrijfas	AlZnMGCu1.5, DIN 1725/1
6	2	Gear Rack	Zahnstange	Tandheugel	C45, DIN 17200
8	14	Spring	Feder	Veer	Class C, DIN 17223
9*	1	Bearing bush	Lagerbuchse	Lagerbus	PA66 + MoS2
10*	1	Bearing bush	Lagerbuchse	Lagerbus	POM
14*	2	Guide band	Führungsband	Geleideband	PTFE + 25% C
15*	2	Guide band	Führungsband	Geleideband	PTFE + 25% C
16*	2	O-ring	O-Ring	O-ring	Buna N
17*	2	O-ring	O-Ring	O-ring	Buna N
18*	1	O-ring	O-Ring	O-ring	Buna N
19*	1	O-ring	O-Ring	O-ring	Buna N
20*	1	Spring Clip	Sprengring	Seegerring	Ck75, DIN17222
21*	1	Thrust Washer	Sicherungsscheibe	Drukschijf	POM
23	2/4	Bolt	Schraube	Bout	12.9 DIN912
24	8/20	Endcap Bolt PD	Endkappenschraube PD	Bout sluitkap PD	AISI 304
25	8/20	Endcap Bolt PE	Endkappenschraube PE	Bout sluitkap PE	AISI 304
26*	2	O-ring	O-Ring	O-ring	Buna N

* Recommended Spare Parts (contained in Repair Kit).
* Empfohlene Ersatzteile (Teil des Reparatursatzes).
* Aanbevolen reserve-onderdelen (opgenomen in reparatiepakket).

Contact Us: Emerson Process Management, Valve Automation facilities at your nearest location:

NORTH & SOUTH AMERICA

18703 GH Circle
PO Box 508
Waller, TX 77484
USA
T +1 281 727 5300
F +1 281 727 5353

2500 Park Avenue West
Mansfield, OH 44906
USA
T +1 419 529 4311
F +1 419 529 3688

9009 King Palm Drive
Tampa, FL 33619
USA
T +1 813 630 2255
F +1 813 630 9449

13840 Pike Road
Missouri City, Texas 77489
USA
T +1 281 499 1561
F +1 281 499 8445

Av. Hollingsworth,
325, Iporanga Sorocaba,
SP 18087-105
Brazil
T +55 15 3238 3788
F +55 15 3228 3300

MIDDLE EAST & AFRICA

P. O. Box 17033
Dubai
United Arab Emirates
T +971 4 811 8100
F +971 4 886 5465
P. O. Box 105958
Abu Dhabi
United Arab Emirates
T +971 2 697 2000
F +971 2 555 0364
P. O. Box 3911
Al Khobar 31952
Saudi Arabia
T +966 3 814 7560
F +966 3 814 7570

P. O. Box 10305
Jubail 31961
Saudi Arabia
T +966 3 340 8650
F +966 3 340 8790

P. O. Box 32281
Doha
Qatar
T +974 4 576777
F +974 4 315448

24 Angus Crescent
Longmeadow Business Estate
East P.O. Box 6908; Greenstone;
1616 Modderfontein, Extension 5
South Africa
T +27 11 451 3700
F +27 11 451 3800

EUROPE

Asveldweg 11
7556 BR Hengelo (O)
The Netherlands
T +31 74 256 1010
F +31 74 291 0938

Siemensring 112
47877 Willich
Germany
T +49 2154 499 660
F +49 2154 499 6613

25, Rue de Villeneuve
Silic – BP 40434
94583 Rungis
France
T +33 1 49 79 73 00
F +33 1 49 79 73 99
Via Montello 71/73
20038 Seregno (Milan)
Italy
T +39 0362 2285 207
F +39 0362 2436 55

6 Bracken Hill
South West Industrial Estate
Peterlee SR8 2LS
United Kingdom
T +44 191 518 0020
F +44 191 518 0032

2A Szturmowa Str
02-678 Warsaw
Poland
T +48 22 45 89 237
F +48 22 45 89 231

C/ Francisco Gervás, 1
28108 Alcobendas – Madrid
Spain
T +34 0913 586 000
F +34 0913 589 145

Letnikovskaya Str. 10-2
115114 Moscow
Russia and FSU
T +7 495 981 98 11
F +7 495 981 98 10

ASIA PACIFIC

No. 9 Gul Road
#01-02 Singapore 629361
T +65 6501 4600
F +65 6268 0028
9/F Gateway Building
No. 10 Ya Bao Road
Chaoyang District
Beijing 100020
P.R.China
T +86 10 5821 1188
F +86 10 5821 1100

No.15 Xing Wang Road
Wuqing Development Area
Tianjin 301700
P.R.China
T +86 22 8212 3300
F +86 22 8212 3308

Lot 13112, Mukim Labu
Kawasan Perindustrian Nilai
71807 Nilai, Negeri Sembilan
Malaysia
T +60 6 799 2323
F +60 6 799 9942

471 Mountain Highway
Bayswater, Victoria 3153
Australia
T +61 3 9721 0200
F +61 3 9720 0588

Delphi B Wing, 601 & 602
6th Floor, Central Avenue
Powai, Mumbai – 400 076
India
T +91 22 6662 0566
F +91 22 6662 0500

NOF, Shinagawa Konan Bldg
1-2-5, Higashi-shinagwa
Shinagwa-ku, Tokyo
140-0002 Japan
T +81 3 5769 6873
F +81 3 5769 6902

All rights reserved.
No part of this publication may be copied or published by means of printing, photocopying, microfilm or otherwise without prior written consent of Emerson Process Management. This restriction also applies to the corresponding drawings and diagrams.
Emerson Process Management has the right to change parts of the machine at any time without prior or direct notice to the client. The contents of this publication are subject to change without notice.
This publication is to be used for the standard version of the machine only. Thus Emerson Process Management cannot be held responsible for any damage resulting from the application of this publication to the version actually delivered to you.
For extra information as to adjustments, maintenance and repair, contact the technical department of your supplier.
This publication has been written with great care. However, Emerson Process Management cannot be held responsible, either for any errors occurring in this publication or for their consequences.
©2012 Emerson Electric Co.

Alle Rechte vorbehalten.
Weder diese Publikation noch Auszüge hieraus dürfen ohne vorherige, schriftliche Zustimmung von Emerson Process Management kopiert oder in gedruckter Form, als Photokopie, Mikrofilm oder in anderer Form veröffentlicht werden. Diese Einschränkung erstreckt sich auch auf die dazugehörigen Zeichnungen und Diagramme.
Emerson Process Management hat das Recht, Teile der Maschine jederzeit und ohne vorherige Benachrichtigung des Kunden zu modifizieren. Der Inhalt dieser Veröffentlichung kann ohne vorherige Ankündigung verändert werden.
Diese Veröffentlichung darf nur für die Standardversion dieser Maschine verwendet werden. Deshalb kann Emerson Process Management nicht haftbar gemacht werden für Schäden gleich welcher Art, die sich durch die Nutzung dieser Publikation auf die Ihnen gelieferte, aktuelle Version ergeben.
Nähere Informationen hinsichtlich der Einstellungen, Wartung und Reparaturen erhalten Sie auf Wunsch vom technischen Kundendienst Ihres Lieferanten.
Diese Publikation wurde mit größtmöglicher Sorgfalt erstellt. Dennoch kann Emerson Process Management weder für Fehler in der Publikation noch für die sich daraus ergebenden Konsequenzen haftbar gemacht werden.
©2012 Emerson Electric Co.

Alle rechten voorbehouden. Niets uit deze uitgave mag worden gekopieerd of gepubliceerd door middel van druk, fotokopiëren, microfilm of op enige andere wijze zonder voorafgaande schriftelijke toestemming van Emerson Process Management. Deze restrictie geldt ook voor de overeenkomstige tekeningen en schema's.
Emerson Process Management heeft het recht om op elk willekeurig moment onderdelen van de machine te wijzigen zonder voorafgaand of direct bericht hiervan aan de klant. De inhoud van deze uitgave kan zonder bericht gewijzigd worden.
Deze uitgave mag alleen voor de standaardversie van de machine worden gebruikt. Bijgevolg kan Emerson Process Management niet verantwoordelijk worden gesteld voor schade die is ontstaan door deze uitgave te gebruiken voor de versie die daadwerkelijk bij u is afgeleverd.
Voor meer informatie, bijvoorbeeld over instellingen, onderhoud en reparatie, kunt u contact opnemen met de technische dienst van uw leverancier.
Deze uitgave is met grote zorg geschreven. Emerson Process Management kan echter niet verantwoordelijk worden gesteld voor eventuele fouten in dezeuitgave of voor de gevolgen hiervan
©2012 Emerson Electric Co.

El-O-Matic E and P Series

Technical data pneumatic Rack and Pinion actuators



TECHNICAL DETAILS, STANDARD ACTUATOR E/P

P-Series

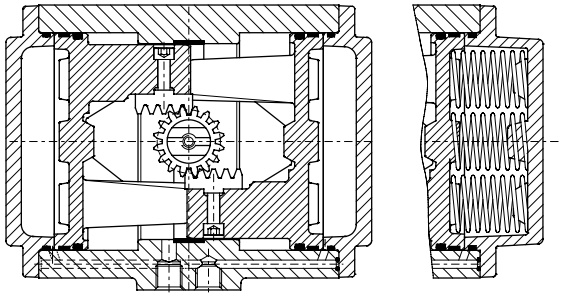

PD = Double acting **PS = Spring return**

E-Series

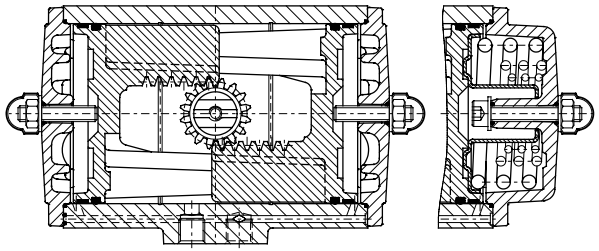

ED = Double acting **ES = Spring return**

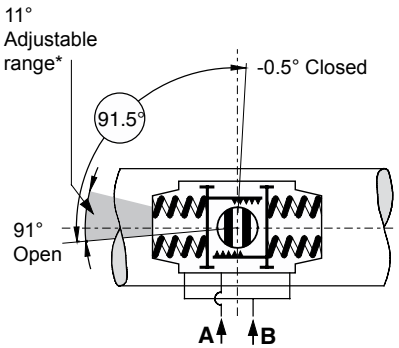

* only standard on E-Series actuators

Specification

Pressure range	: Double acting	20 to 120 psi
	: Spring return	80 to 120 psi,, with max. spring set 40 to 120 psi, reduced spring quantity
	: 180° actuators 87 psi maximum	
Torque	: 1133 to 40,000 in.lb at 80psi supply See torque data sheets 1.104.01 and 1.104.02	
Operating media	: Air, dry or lubricated and inert gasses	
	: For sub-zero applications take appropriate measures	
Temperature	: -4° to +176°F	
Lubrication	: Factory lubricated for the normal life of the actuator	
Construction	: Suitable for indoor and outdoor installation	
Finish	: Polyester non-TGIC based powder coating (see data sheet A4.204.01)	
Rotation	: 91.5° (-0.5° CW to 91° CCW)	
Double acting	: Standard counter clockwise with port "A" pressurized (code A, see data sheet A1.503 for other assembly codes)	
Spring return	: Clockwise fail action (code A, see data sheet A1.504 for other assembly codes)	
Limit stops	: Standard on E-Series. Adjustable range 91°/80°	
	: Optional on P-Series. See data sheet A1.501.01	
	: For double stroke adjustment. See data sheet A1.501.05	

European Directives

PED	: All actuators are suitable for use with Group 2 gasses according to Pressure Equipment Directive 97/23/EC
	: Optional : actuators suitable for use with Group 1 gasses
ATEX	: All basic actuators are suitable for use in hazardous area's classified II 2 GD, zones 1 or 2 (Gasses) and 21 or 22 (Dust)

Russian Approvals

El-O-Matic E and P series pneumatic actuators are available with the GOST-R and Rostechnadzor (RTN) approvals.

Note

1. Operating time is average with actuator under load and solenoid valve fitted.
2. Air consumption is the actual free air volume at 1 atm.
3. Pressure is in barg.

ACTUATOR TYPE			E12	E25	E40	E65	E100	E150	E200	E350	E600	E950	E1600	P2500	P4000
Bore		inch	1.8	2.2	2.8	3.1	3.6	4.1	4.3	5.7	6.9	7.9	9.1	11.8	12.8
Stroke		inch	0.5	0.6	0.7	0.9	1.0	1.2	1.5	1.5	1.7	2.0	2.5	2.2	3.2
Weight:	Double acting	lb.	1.3	2.9	4.0	5.3	6.8	10.5	12.8	23	43	58	94	125	191
	Spring return	lb.	1.5	3.7	5.3	7.9	10.1	15.2	20.1	37	61	85	145	194	291
Operating time		sec.	0.4	0.5	0.7	1.1	1.2	1.8	2.3	3.6	4.5	5.4	6.9	7	12
Air consumption at 1 atm (cu./in.)	port A	stroke	3.1	6.1	9.8	20	21	45	49	110	177	287	445	488	824
	port B	stroke	3.7	6.7	13	22	30	40	61	116	189	299	488	568	1,068

Copyright © Emerson Process Management. The information in this document is subject to change without notice.
Updated data sheets can be obtained from our website **www.El-O-Matic.com** or from your nearest Valve Automation Center ***USA**: +1 281 477 4100 **Europe**: +31 74 256 10 10 **Asia-Pacific:** +65 6501 4600*

EL-O-MATIC BASIC PNEUMATIC ACTUATOR CONFIGURATION

E/P

ES 0040.M 1 A 05 A.14 N 1

Single or Double action

ES or PS = Single acting, **ED or PD** = Double acting

Actuator size

E-Series

0012 = E12	**0025** = E25	**0040** = E40	**0065** = E65	**0100** = E100	**0150** = E150
0200 = E200	**0350** = E 350	**0600** = E600	**0950** = E950	**1600** = E1600	

P-Series

2500 = P2500 **4000** = P4000

Valve flange

Metric ISO 5211	Metric DIN 3337	UNC/NPT ISO 5211	Finish
M =	**D =**	**U =**	Standard
N =	**E =**	**V =**	CSR coating [2] + Aluminum pinion
O =	**F =**	**W =**	CSR coating [2] + Stainless Steel pinion [3]

Limit stops

0 = No limit stops
Standard on P-Series

1 = L1 One way limit stops
Standard on E-Series

2 = Double Stroke Adjustment
Standard on DSA-Series

Assembly code

Code	Action	Rotation	Mounting
A =	Spring to close	clock wise	in line with pipeline
B =	Spring to close	clock wise	across pipeline
C =	Spring to open	counter clock wise	across pipeline
D =	Spring to open	counter clock wise	in line with pipeline

Spring set E-Series

00 = Double acting actuator		
01 = Springset 1	**04** = Springset 4	
02 = Springset 2	**05** = Springset 5	
03 = Springset 3	**06** = Springset 6	

Spring set P-Series

00 = Double acting actuator	
04 = Springset 4	**10** = Springset 10
06 = Springset 6	**12** = Springset 12
08 = Springset 8	**14** = Springset 14

Future expansion

A = Standard

Default Insert

Size (in mm.) [1]	E12	E25	E40	E65	E100	E150	E200	E 350	E600	E950	E1600	P2500	P4000
- ISO or UNC	00	11	14	14	19	19	22	27	27	36	46	00	00
- DIN	00	11	14	14	17	17	22	22	27	36	46	00	00

Visual Indication Code

D = Disk **K** = Knob **N** = No visual indication

Temperature range

0 = Standard	TS: 80°C (176°F)	-20°C (-4°F)
1 = High temp	TS: 120°C (248°F)	-20°C (-4°F)
2 = Low temp	TS: 80°C (176°F)	-40°C (-40°F)

[1] Actuators E12, P2500 and P4000 have no inserts. They have have a inner square the shaft 180° actuators are not covered by this configuration matrix.

[2] CSR Coating not possible in combination with Double Stroke Adjustment limit stops (DSA series).

[3] Stainless Steel Pinion not possible in combination with Double Stroke Adjustment limit stops (DSA series).

See following data sheets for more information

A1.104.01 / A1.104.02

A1.103.106 / A1.103.073 / A1.103.102 / A1.103.103 A1.101.30 / A1.101.33 / A4.204.01

A1.501.01/ A1.501.05

A1.503/ A1.504

A1.104.02

A1.103.073 A1.103.106 A1.103.120

A1.101.70 / A1.101.71

Copyright © Emerson Process Management. The information in this document is subject to change without notice.
Updated data sheets can be obtained from our website **www.El-O-Matic.com** or from your nearest Valve Automation Center ***USA**: +1 281 477 4100 **Europe**: +31 74 256 10 10 **Asia-Pacific:** +65 6501 4600*

EL-O-MATIC ACTUATOR WITH ONE WAY LIMIT STOPS

L1/LF

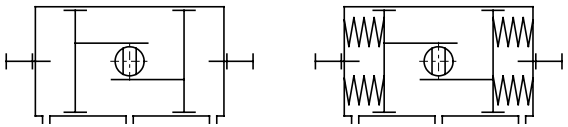

Dim. in inch	ACTUATOR TYPE	
	P2500	P4000
A	22.8	27.9
B	31.3	45.4
C	14.0	15
D	1.2	1.2

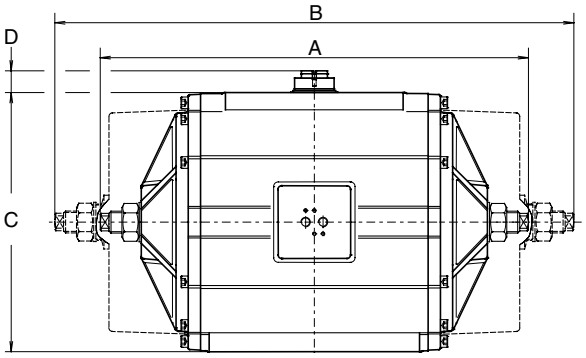

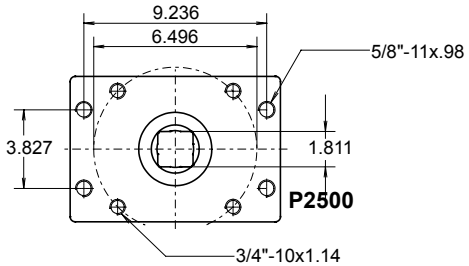

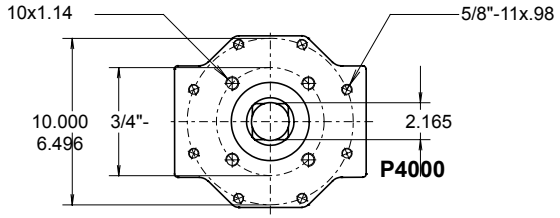

Note: Do not adjust under pressure

Description

Actuators with one way adjustable limit stops are used where the maximum opening (or closing) position of the valve needs to be reduced. For instance to adjust the maximum capacity of a remote operated valve.
Also actuators with 180° rotation are available with these stops.

Operation

Stop screws are fitted to both endcaps and the screw length is such that adjustment is possible through the specified rotation of the actuator.
The modified endcap is machined for -0.5° to +93° rotation for all P-Series models.

Identification

"L1" is added to the basic part number i.e. PD2500-L1

Specification:

Pressure		: Up to 120 PSI
Media		: Air, dry or lubricated or non-corrosive gas
Torque	(90°)	: Data sheet A1.104.01 - A1.104.04
	(180°)	: Data sheet P-Series A1.204.01 and A1.204.02
Other dimensions		: Data sheet A 1.103.XXX (90°)
		: Data sheet A 1.203.011 (180°)
Temperature		: -4.0° to +176°F
Adjustable range		: 80°-93°(90°) or 160°-186° (180°)

Adjustable position (see data sheet A1.503 or A1.504)

code	position	
A	Valve open	(spring to close)
B	Valve open	(spring to close)
C	Valve closed	(spring to open)
D	Valve closed	(spring to open)

Note:

1) Can be provided with extra long screws for full range adjustment (identification: PD2500-LF)
2) This option in combination of a manual override gearbox is redundant

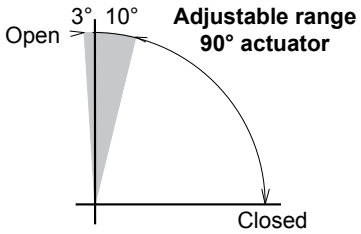

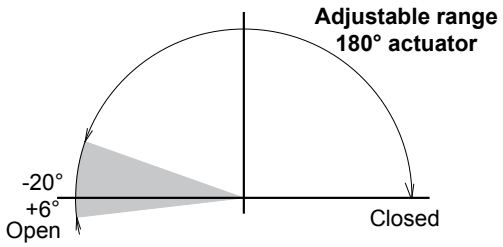

Copyright © Emerson Process Management. The information in this document is subject to change without notice.

LIMIT STOP PLATE DIMENSIONS LS 420

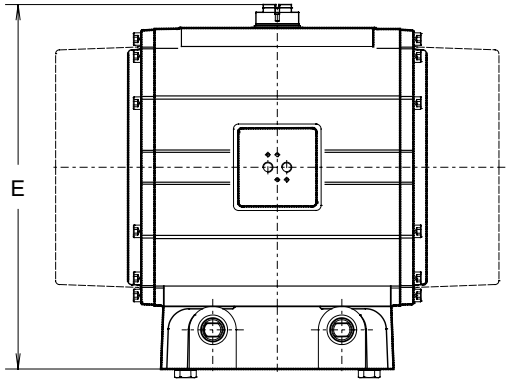

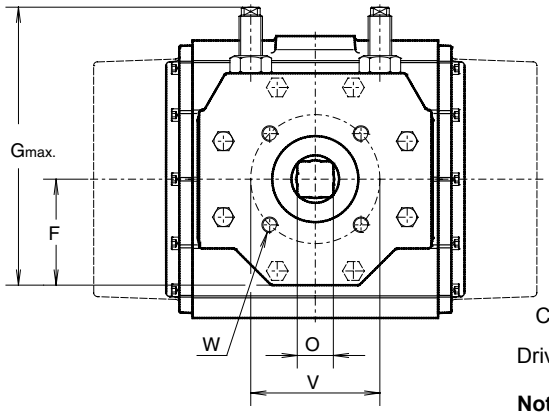

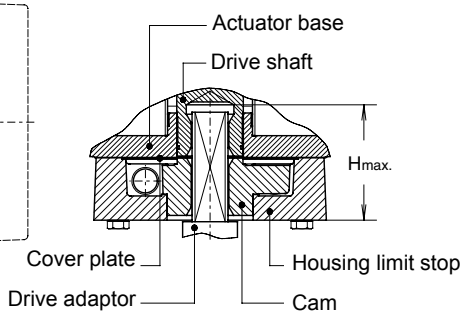

Note: Cover plate only in combination with P2500

Description
These limit stop plates are used when precise control is required for both end of stroke positions. It is possible to adjust 15° of both ends of the standard stroke.

Construction
The complete stop plate assembly may be added to the 90° P- series actuators.
The assembly is normally sandwiched between the actuator and mounting surface of the valve or bracket. Bearing rings are used at both surfaces to provide a long life expectancy.

The unit is assembled with a drive adaptor which passes through the stop plate, into the square actuator and provides the coupling between the two components.
This drive adaptor normally also accommodates the coupling of the valve stem.

Identification
"LS420" is added to the basic part number i.e. PD2500-LS420

Other dimensions
See data sheet A1.103.xxx

Option
Version for 180° or DIN-standard actuator

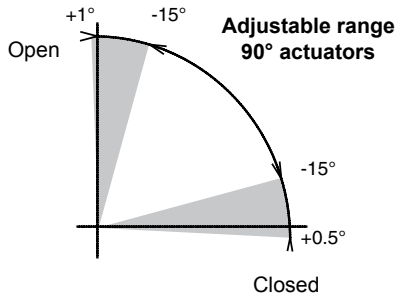

Dim. in inches	ACTUATOR TYPE	
	P2500	P4000
E	18.3	19.3
F	5.3	5.3
G	12.7	12.7
H	5.1	5.6
O	1.8	2.2
V	165	165
W	3/4-10 x 1.14"	3/4-10 x 1.14"

Copyright © Emerson Process Management. The information in this document is subject to change without notice.
Updated data sheets can be obtained from our website **www.El-O-Matic.com** or from your nearest Valve Automation Center ***USA**: +1 281 477 4100 **Europe**: +31 74 256 10 10 **Asia-Pacific:** +65 6501 4600*
EMERSON Process Management

Data sheet
Sheet No.: A1.501.05 Rev. B
Date: June 2013

EL-O-MATIC ACTUATOR WITH DOUBLE STROKE ADJUSTMENT

DSA

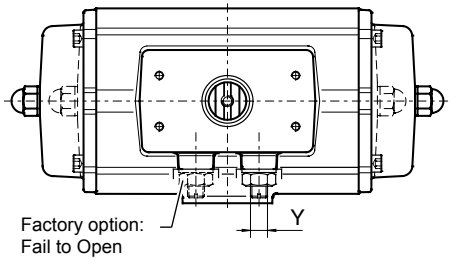

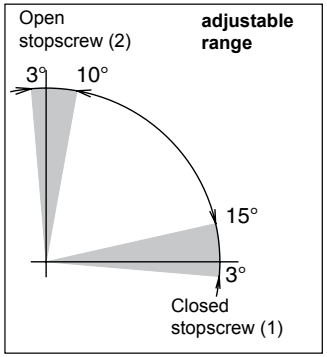

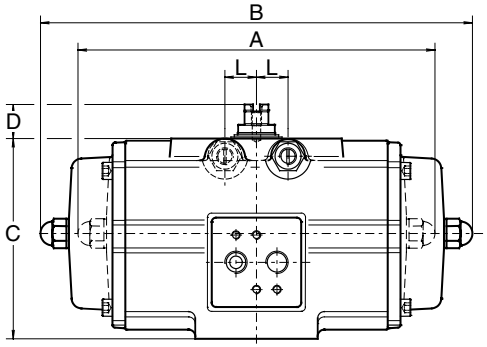

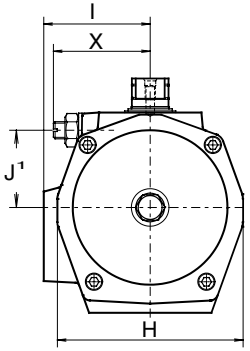

Dim. in inch.	Actuator type									
	E25	E40	E65	E100	E150	E200	E350	E600	E950	E1600
A DA	6.26	7.09	7.83	8.70	10.00	11.14	12.01	15.35	17.32	20.47
B SR	6.77	8.03	9.80	10.51	12.20	14.17	15.24	18.90	20.94	25.24
C	3.15	3.66	4.13	4.65	5.51	5.63	7.13	8.66	10.20	11.69
D	0.79	0.79	0.79	0.79	0.79	0.79	0.79	1.18	1.18	1.18
H	2.91	3.39	3.86	4.25	4.76	5.04	6.81	8.15	9.09	264.00
I	1.81	2.01	2.26	2.48	2.76	2.87	3.71	4.45	4.96	5.59
J1	1.11	1.38	1.57	1.72	1.92	2.12	2.85	3.50	4.03	4.50
L	0.45	0.61	0.61	0.73	0.97	0.97	0.97	1.63	1.63	1.87
Y	1/4"-20	5/16"-18	5/16"-19	3/8"-16	3/8"-16	1/2"-13	1/2"-13	5/8"-11	5/8"-11	3/4"-10
X	1.42	1.63	1.63	1.99	2.36	2.46	2.85	4.02	4.02	4.31
X max.	1.63	1.91	1.91	2.30	2.64	2.91	3.31	4.51	4.51	4.88

Description

Actuators with double stroke adjustment are normally used for high performance butterfly valves where a fine adjustment is required for the closed position. In this version adjustment is provided at the end of the opening and closing stroke positions. DSA actuators may be double acting or spring return, though are normally used as spring return (fail close) actuators.

Operation

The closed position is adjusted by means of the stop-screw (1) located in the actuator body and for the open position by the stop-screws (2) in the actuator end caps.

Identification

See data sheet A1.102.10

Specification

Pressure	: Up to 120 psi
Operating media	: Air, dry or lubricated or non-corrosive gas
Torque (90°)	: Data sheet A1.104.01 - A1.104.02
Rotation -	
- Spring return	: Clock-wise on air failure.
- Double acting	: Counter clock-wise with port “A” pressurised.
Other dimensions	: Data sheet A1.103.XXX
Temperature	: -4° to +176° F
Adjustable range	: Closed position (1), -3° - 15° Open position (2), 80° - 93°

Note

1) Can be provided with extra long end-cap stop screws for full range adjustment of the “open” position.
2) This DSA option is not required on actuators fitted with manual override gearboxes, as MO gearboxes already incorporate this function.

Important

1) "Fail open" is factory option.
2) When a standard Fail to Close actuator is re-assembled for “Fail to Open” operation (code D; see data sheet 1.504), both stop-screws (1)and (2) will adjust the closed position. There is no adjustment for the open position!
3) Vice versa: When a Fail to Open actuator is re-assembled for “Fail to Close” operation (code A; see data sheet 1.504), both stop-screws (1) and (2) will adjust the open position. There is no adjustment for the closed position!

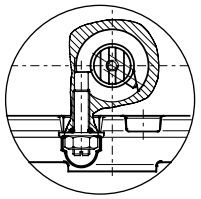

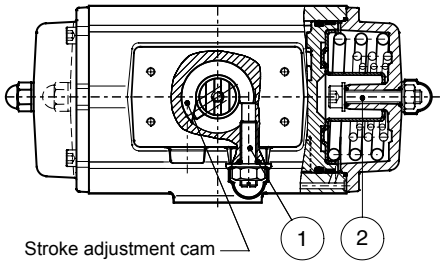

Copyright © Emerson Process Management. The information in this document is subject to change without notice.

Data sheet
Sheet No.: A1.103.106 Rev. F
Date: September 2013

DIMENSION SHEET STANDARD ACTUATOR - ISO

E/P

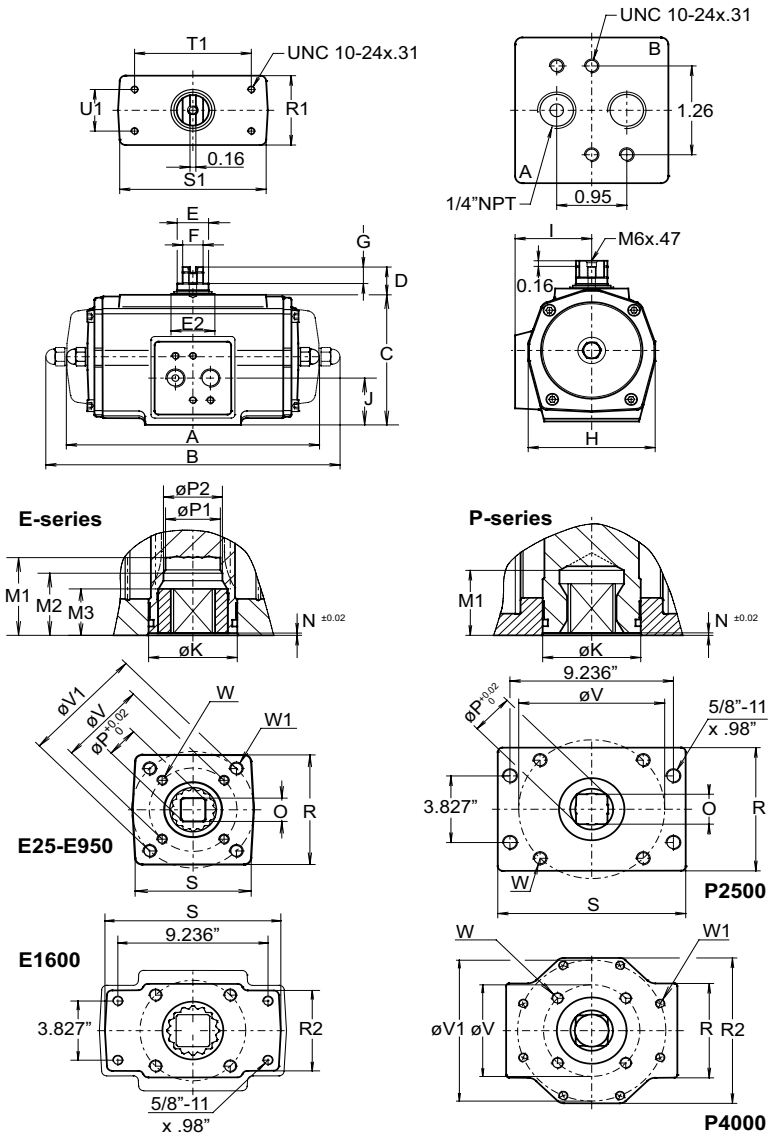

Dim.	Actuators E-series											P-series	
in inch	E 12	E 25	E 40	E 65	E100	E150	E200	E 350	E600	E950	E1600	P2500	P4000
A DA	For E12 dimensions see data sheet A1.103.102	6.26	7.09	7.83	8.70	10.00	11.14	12.01	15.24	16.69	20.31	14.88	19.76
B SR		6.77	8.03	9.80	10.51	12.20	14.17	15.24	18.78	20.35	25.08	22.44	32.83
C		3.15	3.66	4.13	4.65	5.51	5.63	7.13	8.66	10.20	11.69	14.02	14.96
D		0.79	0.79	0.79	0.79	0.79	0.79	0.79	1.18	1.18	1.18	1.18	1.18
E		0.63	0.87	0.87	0.87	1.42	1.42	1.42	2.17	2.17	2.52	2.17	2.52
E2		0.91	1.18	1.18	1.18	1.77	1.77	1.77	2.56	2.56	2.95	2.56	3.15
F		0.39	0.55	0.55	0.55	0.75	0.75	0.75	1.42	1.42	1.42	1.42	1.42
G		0.47	0.47	0.47	0.47	0.47	0.47	0.47	0.39	0.39	0.39	0.39	0.39
H		2.91	3.39	3.86	4.25	4.76	5.04	6.81	8.15	9.09	10.43	13.78	14.96
I		1.81	2.09	2.26	2.48	2.76	2.87	3.71	4.45	4.96	5.59	7.28	7.87
J		1.26	1.32	1.54	1.59	1.59	1.99	2.85	3.33	4.15	4.74	7.01	7.48
K		0.94	1.30	1.30	1.50	2.17	2.17	2.17	2.68	2.95	3.74	3.35	4.72
M1		1.36	1.36	1.36	1.36	1.97	1.97	1.97	2.05	2.52	3.23	2.60	3.03
M2		-	-	-	1.06	-	1.46	1.46	-	-	-	-	-
M3		0.669	0.669	0.669	0.787	0.787	1.161	1.161	1.161	1.949	2.303	-	-
N		0.04	0.04	0.04	0.06	0.04	0.06	0.06	0.06	0.06	0.06	0.12	0.06
O max.		0.437	0.556	0.556	0.753	0.753	0.871	1.068	1.068	1.424	1.817	1.817	2.173
O min.		0.433	0.551	0.551	0.748	0.748	0.866	1.063	1.063	1.417	1.811	1.811	2.165
P		0.555	0.713	0.713	0.992	1.110	1.110	1.425	1.425	1.898	2.370	2.370	2.843
P1		0.555	0.713	0.831	0.909	1.303	1.303	1.303	1.437	1.909	2.382	-	-
P2		-	-	-	0.988	1.264	1.264	1.264	-	-	-	-	-
R		2.05	2.56	2.76	2.76	3.39	3.54	4.49	4.88	5.12	6.06	6.69	6.69
R1		1.97	1.97	1.97	2.36	2.36	2.36	2.36	3.54	3.54	4.92	6.30	6.30
R2		-	-	-	-	-	-	-	-	-	5.20	-	10.31
S		2.05	2.56	2.76	2.76	3.62	3.54	4.49	4.88	5.59	11.02	11.42	11.42
S1		3.94	3.94	3.94	3.94	3.94	3.94	3.94	6.69	6.69	8.27	9.65	9.65
T1		3.150	3.150	3.150	3.150	3.150	3.150	3.150	5.118	5.118	5.118	5.118	5.118
U1		1.181	1.181	1.181	1.181	1.181	1.181	1.181	1.181	1.181	1.181	1.181	1.181
		F03	**F05**	**F05**	**F05**	**F07**	**F07**	**F07**	**F10**	**F10**	**F16**	**F16**	**F16**
V		1.417	1.969	1.969	1.969	2.756	2.756	2.756	4.016	4.016	6.496	6.496	6.496
W		10-24 x.31"	1/4"-20 x.39"	1/4"-20 x.39"	1/4"-20 x.39"	5/16"-18 x.39"	5/16"-18 x.39"	5/16"-18 x.39"	3/8"-16 x.63"	3/8"-16 x.63"	3/4"-10 x1.14"	3/4"-10 x1.14"	3/4"-10 x1.14"
		F05	**F07**	**F07**	**F07**	**F10**	**F10**	**F10**	**F12**	**F14**	**-**	**-**	**F25**
V1		1.969	2.756	2.756	2.756	4.016	4.016	4.016	4.921	5.512	-	-	10.000
W1		1/4"-20 x.39"	5/16"-18 x.39"	5/16"-18 x.39"	5/16"-18 x.39"	3/8"-16 x.63"	3/8"-16 x.63"	3/8"-16 x.63"	1/2"-13 x.79"	5/8"-11 x.98"	-	-	"5/8""-11 x.98"

Note
1. Flange and square drive to ISO 5211
2. Top and solenoid flange to VDI/VDE 3845 (NAMUR)
3. For P-series actuators with limit stops see A1.501.01

Copyright © Emerson Process Management. The information in this document is subject to change without notice.

Data sheet
Sheet No.: A1.103.102 Rev. A
Date: November 2009

DIMENSION SHEET ACTUATOR ISO E12 (90°/180°)

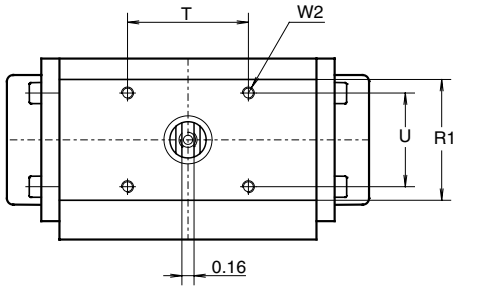

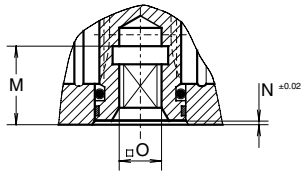

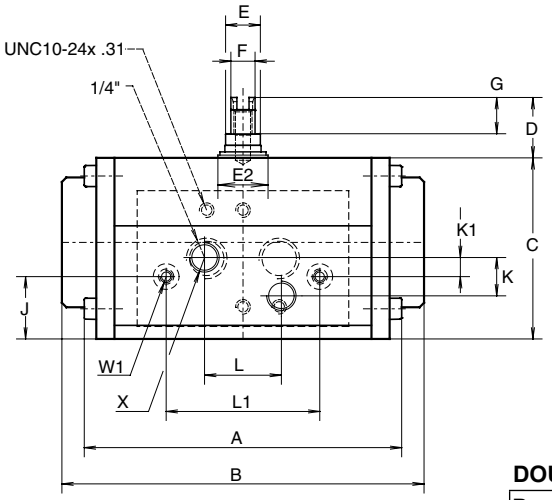

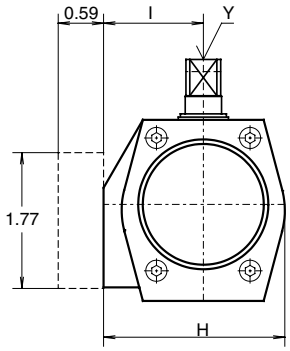

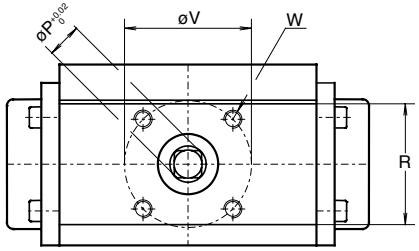

DOUBLE ACTING TORQUE (ED)

Pressure	psi	40	50	60	70	80	90	100	120
Torque 90°/180°	(in.lb.)	59	74	89	104	119	134	149	179

SINGLE ACTING TORQUE (ES)

		Air stroke						Spring stroke	
Pressure	psi	60		80		100			
Position	-	start	end	start	end	start	end	start	end
Torque 90°	(in.lb.)	48	23	80	55	112	87	64	41
Torque 180°	(in.lb.)	49	25	81	57	112	88	63	40

Dim. in Inches	90°	180°
A ED	4.06	6.10
B ES	4.65	8.50
C	2.36	2.36
D	0.79	0.79
E	0.63	0.63
E2	0.91	0.91
F	0.39	0.39
G	0.47	0.47
H	2.36	2.36
I	1.30	1.30
J	0.83	0.83
K	0.50	0.50
K1	0.25	0.25
L	1.00	1.00
L1	2.00	2.00
M	0.65	0.65
N	0.039	0.039
Omax.	0.358	0.358
Omin.	0.354	0.354
P	0.476	0.476
R	1.57	1.57
R1	1.57	1.57
T	1.57	1.57
U	1.22	1.22
V	1.654	1.654
W	10-24 UNCx.24"	10-24 UNCx.24"
W1	10-24 UNCx.24"	10-24 UNCx.24"
W2	10-24 UNCx.24"	10-24 UNCx.24"
X	1/8"NPT	1/8"NPT
Y	M6x.48	M6x.48

Copyright © Emerson Process Management. The information in this document is subject to change without notice.

DRIVE INSERTS FOR EL-O-MATIC ACTUATORS

Standard available insert shapes

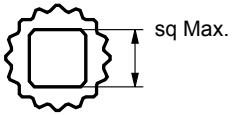

Optional available insert shapes

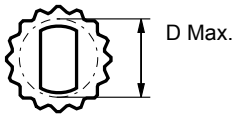

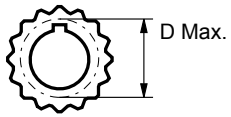

Insert mounting acc. ISO 5211

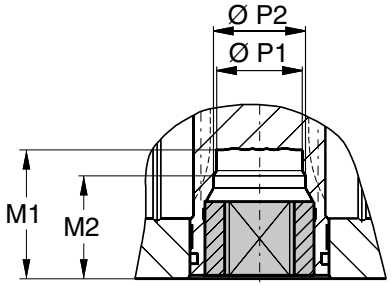

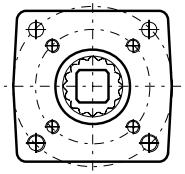

	Standard inserts with inner-square-dimensions per actuator type								
	E25	E40 / E65	E100	E150	E200	E350	E600	E950	E1600
	0.433	0.551	0.748	0.748	0.866	1.063	1.063	1.417	1.811
	Optional insert dimensions								
	0.354	0.394	0.472	0.551	0.551	0.551	0.551	0.866	
	0.394	0.472	0.551	0.630	0.630	0.630	0.630		
			0.63	0.669	0.669	0.669	0.669		
				0.866	0.748	0.748	0.748		
				0.945	0.945	0.866	0.866		
				1.063	1.063	0.945	0.945		
Maximum insert dimensions									
M1	1.36	1.36	1.36	1.97	1.97	1.97	2.05	2.52	3.23
M2	-	-	1.06	1.46	1.46	1.46	-	-	-
P1	0.71	0.71	0.91	1.26	1.26	1.26	1.44	1.91	2.38
P2	-	-	0.99	1.43	1.43	1.43	-	-	-
SQ max.	0.630	0.630	0.748	1.063	1.063	1.063	1.063	1.417	1.811
D max.	0.827	0.827	0.929	1.323	1.323	1.323	1.323	1.772	2.362

Description

Most of the El-O-Matic actuators are fitted with drive inserts. This enables actuators to be directly mounted onto suitable valves and eliminates the need for a bracket and coupling type mounting kit. The use of direct mounts significantly cuts the cost of the valve/actuator assembly.

Standard actuators are fitted with square drive inserts in accordance with ISO 5211 (or DIN 3337), but a wide variety of other inserts are also available. Special inserts may have oversize or undersize squares, double-D and shaft key way forms.

Drive inserts can be supplied on factory built actuators or as loose items and are easily replaceable at distributor or end user level.

Where direct mounts are not possible, for instance on valves with exposed grand packing, the use of inserts often simplifies the design of the mounting kit.

Material : Aluminum alloy
Finish : Anodized

The following actuator types do not have inserts.
- E12,
- P2500 and P4000
- 180° actuators

These actuators have inner square directly in the bottom of the pinion. See the following data sheets for more information :

E12	ISO5211	A1.103.102
P2500/P4000	ISO 5211	A1.103.106
180°	ISO 5211	A1.203.011

Copyright © Emerson Process Management. The information in this document is subject to change without notice.

DOUBLE ACTING ACTUATOR TORQUE (In.lb.) 90°

DOUBLE ACTING TORQUE

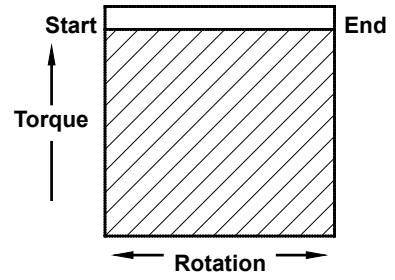

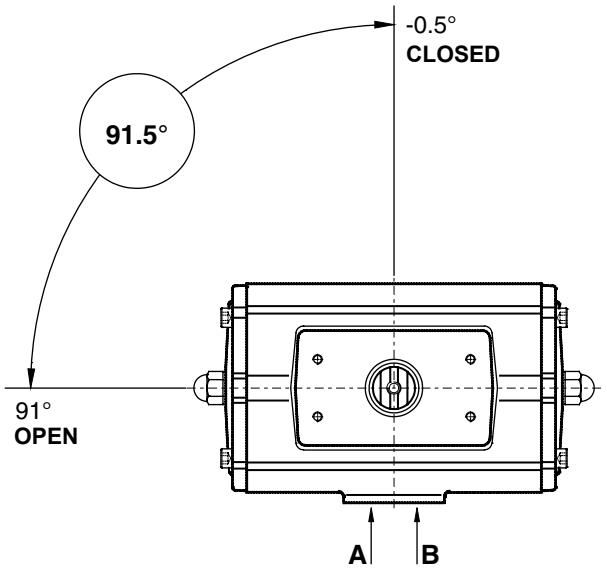

Actuator		Torque of double acting actuators (in In.lb) Supply pressure (psi)												
Type	**Size**	**30**	**35**	**40**	**45**	**50**	**55**	**60**	**70**	**75**	**80**	**90**	**100**	**120**
ED	**12**	43.9	51.4	58.9	66.4	73.9	81.4	88.9	104	111	119	134	149	179
ED	**25**	81.4	95.3	109	123	137	151	165	193	206	220	248	276	332
ED	**40**	153	179	205	231	257	283	309	361	387	413	466	518	622
ED	**65**	233	272	312	352	392	431	471	551	590	630	709	789	948
ED	**100**	344	402	461	520	578	637	696	813	872	930	1048	1165	1400
ED	**150**	551	645	739	833	927	1021	1115	1303	1397	1491	1680	1868	2244
ED	**200**	754	883	1011	1140	1269	1398	1527	1784	1913	2042	2299	2557	3072
ED	**350**	1310	1534	1757	1981	2205	2428	2652	3100	3323	3547	3994	4442	5337
ED	**600**	2226	2606	2986	3366	3747	4127	4507	5267	5647	6028	6788	7548	9069
ED	**950**	3323	3890	4458	5025	5593	6160	6728	7862	8430	8997	10132	11267	13537
ED	**1600**	5493	6431	7369	8307	9245	10183	11121	12998	13936	14874	16750	18626	22379
PD	**2500**	8774	10273	11825	13270	14768	16267	17847	20858	22363	23869	26880	29891	35912
PD	**4000**	14874	17414	19962	22495	25035	27576	30127	35210	37751	40293	45375	50458	60623

Note

1. Emerson Process Management recommends that the valve manufacturer supply the maximum required torque values (Including any adjustments or suggested safety factors for valve service conditions or application). Additionally, the valve manufacturer must identify at which position(s) and direction(s) of rotation (Counter Clock Wise or Clock Wise) these maximum requirements occur.
2. If in doubt, or you require any assistance with sizing actuators, do not hesitate to contact your nearest Emerson's Valve Automation Division representative.
3 Pressure on port "A" opens the actuator*
4 The actuator is shown in closed position*

(* code A, data sheet A1.503)

Copyright © Emerson Process Management. The information in this document is subject to change without notice.
Updated data sheets can be obtained from our website **www.El-O-Matic.com** or from your nearest Valve Automation Center ***USA**: +1 281 477 4100 **Europe**: +31 74 256 10 10 **Asia-Pacific:** +65 6501 4600*

EMERSON
Process Management

SPRING RETURN ACTUATOR TORQUE (In.lb.)

90°

SINGLE ACTING TORQUE

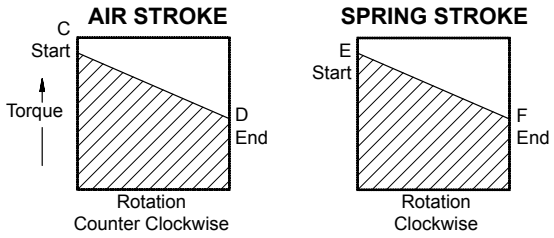

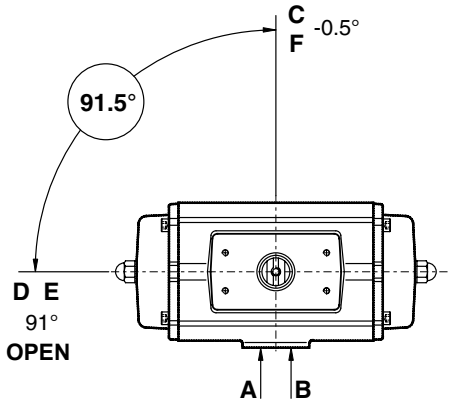

Note

1. Emerson Process Management recommends that the valve manufacturer supply the maximum required torque values (Including any adjustments or suggested safety factors for valve service conditions or application). Additionally, the valve manufacturer must identify at which position(s) and direction(s) of rotation (Counter Clock Wise or Clock Wise) these maximum requirements occur.
2. If in doubt, or you require any assistance with sizing actuators, do not hesitate to contact your nearest Emerson's Valve Automation Division representative.

3 Pressure on port "A" opens the actuator*
4 The actuator is shown in closed position*
(* code A, data sheet A1.504)

Springset nr.		Air Stroke (lbf/in) SUPPLY PRESSURE (in PSI)										Spring Stroke (lbf/in)	
Actuator		40		60		80		100		120			
Type		C	D	C	D	C	D	C	D	C	D	E	F
PS 2500	6	6881	4278	12875	10273	18869	16267	24863	22261	30858	28255	7013	4401
	8	5251	1781	11245	7775	17239	13769	23233	19764	29228	25758	9351	5868
	10	-	-	9615	5278	15609	11272	21603	17266	27597	23260	11689	7335
	12	-	-	7985	2780	13979	8774	19973	14768	25967	20763	14026	8803
	14	-	-	-	-	12349	6277	18343	12271	24337	18265	16364	10270
PS 4000	6	11701	7310	21862	17472	32024	27633	42185	37795	52347	47956	11835	7429
	8	8949	3096	19111	13257	29272	23419	39434	33580	49595	43742	15780	9905
	10	-	-	16359	9042	26521	19204	36682	29365	46844	39527	19725	12381
	12	-	-	13608	4828	23770	14989	33931	25150	44093	35312	23670	14857
	14	-	-	-	-	21018	10774	31180	20936	41341	31097	27615	17333

Springset nr.		Air Stroke (lbf/in) SUPPLY PRESSURE (in PSI)										Spring Stroke (lbf/in)	
Actuator		40		60		80		100		120			
Type		C	D	C	D	C	D	C	D	C	D	E	F
ES 12	2	-	-	48	24	80	55	111	87	143	119	63	40
ES 25	2	71	44	130	103	189	162	248	221	306	280	62	39
	3	48	8	107	67	166	126	225	185	284	244	94	59
	4	-	-	85	31	144	90	203	149	262	208	125	78
	5	-	-	-	-	121	54	180	113	239	172	156	98
	6	-	-	-	-	99	18	158	77	217	136	188	117
ES 40	2	133	82	243	193	354	303	464	414	575	524	117	73
	3	91	15	201	125	312	236	422	346	533	457	176	110
	4	-	-	159	58	270	169	380	279	491	390	234	146
	5	-	-	-	-	228	101	338	212	449	322	293	183
	6	-	-	-	-	185	34	296	144	406	255	351	220
ES 65	2	196	117	365	285	533	454	701	622	870	790	186	117
	3	129	10	297	178	466	347	634	515	802	683	279	176
	4	-	-	230	71	398	240	567	408	735	576	372	234
	5	-	-	-	-	331	133	500	301	668	470	465	292
	6	-	-	-	-	264	26	432	194	601	363	558	351
ES 100	2	303	192	552	441	801	690	1050	939	1299	1188	258	161
	3	211	44	460	293	709	542	958	791	1206	1039	387	242
	4	-	-	367	144	616	393	865	642	1114	891	516	323
	5	-	-	-	-	523	245	772	494	1021	743	646	403
	6	-	-	-	-	430	96	679	345	928	594	775	484
ES 150	2	485	297	884	696	1283	1094	1681	1493	2080	1892	423	259
	3	337	54	735	453	1134	852	1533	1250	1931	1649	634	388
	4	-	-	587	210	985	609	1384	1007	1783	1406	845	517
	5	-	-	-	-	837	366	1235	764	1634	1163	1056	647
	6	-	-	-	-	688	123	1087	522	1485	920	1268	776
ES 200	2	656	406	1202	952	1747	1498	2293	2043	2838	2589	579	362
	3	448	74	994	619	1539	1165	2085	1710	2631	2256	868	542
	4	-	-	786	287	1332	832	1877	1378	2423	1924	1158	723
	5	-	-	-	-	1124	500	1669	1045	2215	1591	1447	904
	6	-	-	-	-	916	167	1462	713	2007	1258	1736	1085
ES 350	2	1105	684	2053	1632	3001	2580	3949	3528	4897	4476	1025	658
	3	727	95	1675	1043	2623	1991	3571	2939	4519	3887	1537	987
	4	-	-	1297	455	2245	1403	3193	2351	4141	3299	2049	1317
	5	-	-	-	-	1866	814	2814	1762	3762	2710	2561	1646
	6	-	-	-	-	1488	225	2436	1173	3384	2121	3074	1975
ES 600	2	1920	1183	3531	2794	5142	4405	6753	6016	8364	7628	1723	1082
	3	1298	193	2909	1804	4520	3415	6131	5026	7742	6637	2585	1624
	4	-	-	2287	814	3898	2425	5509	4036	7120	5647	3446	2165
	5	-	-	-	-	3276	1434	4887	3046	6498	4657	4308	2706
	6	-	-	-	-	2654	444	4265	2055	5876	3666	5169	3247
ES 950	2	2898	1777	5303	4182	7708	6587	10113	8992	12518	11397	2563	1587
	3	1986	304	4391	2709	6796	5114	9201	7519	11606	9924	3844	2381
	4	-	-	3479	1236	5884	3641	8288	6046	10693	8451	5125	3175
	5	-	-	-	-	4971	2168	7376	4573	9781	6978	6407	3968
	6	-	-	-	-	4059	695	6464	3100	8869	5505	7688	4762
ES 1600	2	4765	2988	8741	6964	12716	10939	16692	14915	20668	18890	4193	2646
	3	3244	578	7220	4554	11196	8530	15171	12505	19147	16481	6289	3970
	4	-	-	5699	2145	9675	6120	13650	10096	17626	14071	8385	5293
	5	-	-	-	-	8154	3711	12129	7686	16105	11662	10481	6616
	6	-	-	-	-	6633	1301	10608	5277	14584	9252	12578	7939

Copyright © Emerson Process Management. The information in this document is subject to change without notice.

CONSTRUCTION, PARTS AND MATERIALS E-SERIES ACTUATORS

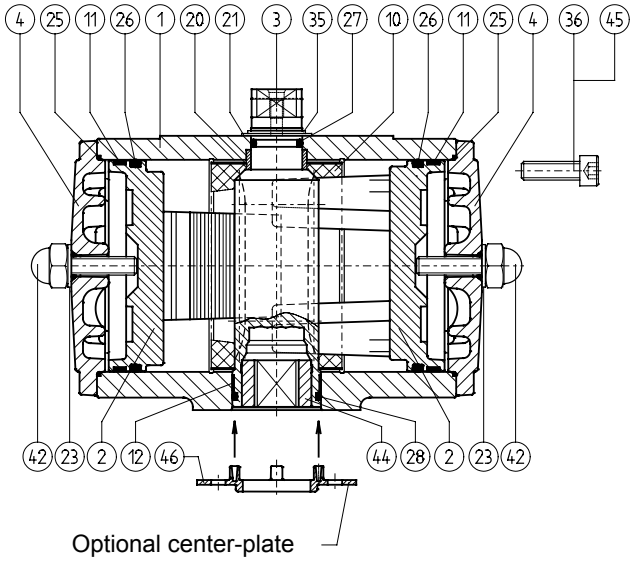

Notes

1 Hard anodized aluminum alloy: AlZnMgCu1.5, DIN 1725/1
2 Deltatone Coating
3 Anodized
4 Zinc plated and passivated
5 CSR Coating (see 4.204.02)
6 Stainless Steel Sandvic 1802, SS2382
7 Stainless Steel X35CrM017
8 No insert, adaptor square direct in pinion

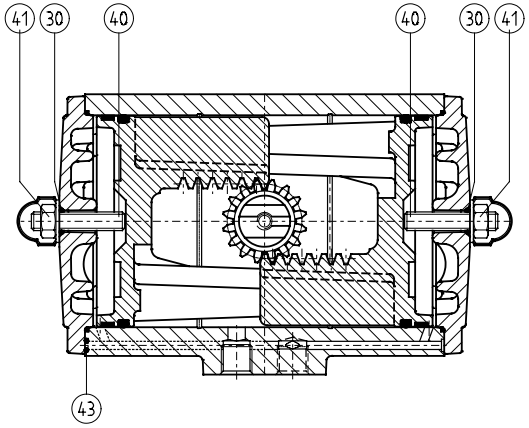

DOUBLE ACTING ED

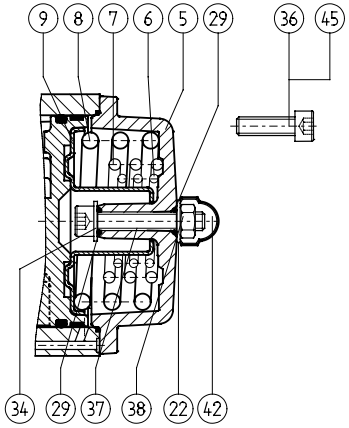

SINGLE ACTING ES

Parts				Materials		Executions		
Nr.		Description	Qty.	Description	Specification	Std	S.S. Shaft	CSR
1		Body	1	Aluminum Alloy	UNS A13600, ASTM B85	-	-	5
2		Piston	2	Aluminum Alloy	UNS A03560, ASTM B26	-	-	-
3		Drive pinion	1	GAlSi10Mg, DIN 1725/2	UNS 1 77075, ASTM 7075 T6	1	6	6
4		End Cap ED	2	Aluminum Alloy	UNS A13600, ASTM B85	-	-	5
5		End Cap ES	2	Aluminum Alloy	UNS A13600, ASTM B85	-	-	5
6		Spring- inner	2	Carbon Spring Steel	UNS G10860, ASTM A228	2	2	2
7		Spring- mid	2	Carbon Spring Steel	UNS G10860, ASTM A228	2	2	2
8		Spring- outer	2	Carbon Spring Steel	UNS G10860, ASTM A228	2	2	2
9		Spring Holder	2	Steel	C45, DIN 17200	3	3	3
10	*	Guide Band	1	Nylatron	PA6.6 + MoS2	-	-	-
11	*	Guide Band	2	PTFE, Carbon filled	PTFE + 25% C	-	-	-
12	*	Bearing Bush	1	Nylatron	PA6.6 + MoS2	-	-	-
20	*	Bearing Bush	1	Delrin	POM	-	-	-
21	*	O-ring	1	Nitrile Rubber	Buna N	-	-	-
22	*	Washer ES	2	Nylon	PA6	-	-	-
23	*	Washer ED	2	Nylon	PA6	-	-	-
25	*	O-ring	2	Nitrile Rubber	Buna N	-	-	-
26	*	O-ring	2	Nitrile Rubber	Buna N	-	-	-
27	*	Washer	1	ZEDEX 100 K	-	-	-	-
28	*	O-ring	1	Nitrile Rubber	Buna N	-	-	-
29	*	O-ring	4	Nitrile Rubber	Buna N	-	-	-
30	*	O-ring	2	Nitrile Rubber	Buna N	-	-	-
34		Washer ES	2	Steel	C35	3	3	3
35	*	Spring Clip	1	Carbon Spring Steel	MIL - R-212 48B	2	7	7
36		End Cap Bolt ED/ES	8	Stainless Steel	AISI 304	-	-	-
37		Limit Stop Bolt ES	2	Stainless Steel	AISI 304	-	-	-
38		Nut	2	Stainless Steel	AISI 304	-	-	-
40		Limit Stop Bolt ED	2	Stainless Steel	AISI 304	-	-	-
41		Nut	2	Stainless Steel	AISI 304	-	-	-
42		Nut Cover	2	Polyethylene	PE	-	-	-
43	*	O-ring	2	Nitrile Rubber	Buna N	-	-	-
44		Insert	1	Aluminum Alloy	UNS 1 6082, ASTM 6082	4	9	4
45		Threaded insert	8	Steel	UNS G10430, ASTM A29	3	3	3

* Recommended spare parts (contained in Repair kits)

Remark
All materials are European origin, listed are the nearest US equivalents.

Finish
Standard : Polyester non-TGIC based powder coating (see data sheet A4.204.01)
CSR : CSR Coating (see data sheet A4.204.02)

Copyright © Emerson Process Management. The information in this document is subject to change without notice.

CONSTRUCTION, PARTS AND MATERIALS P-SERIES ACTUATORS

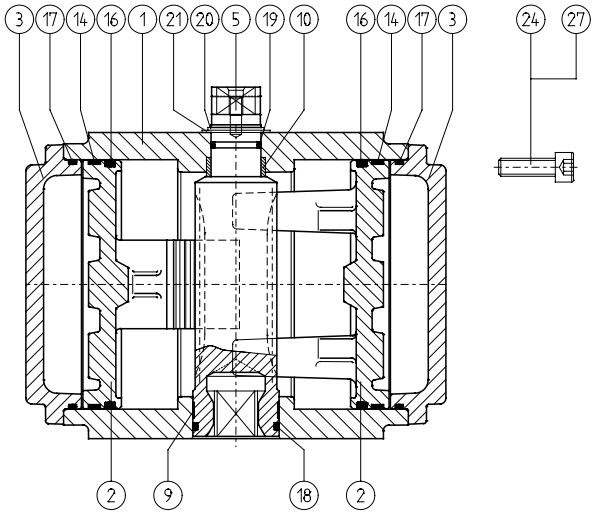

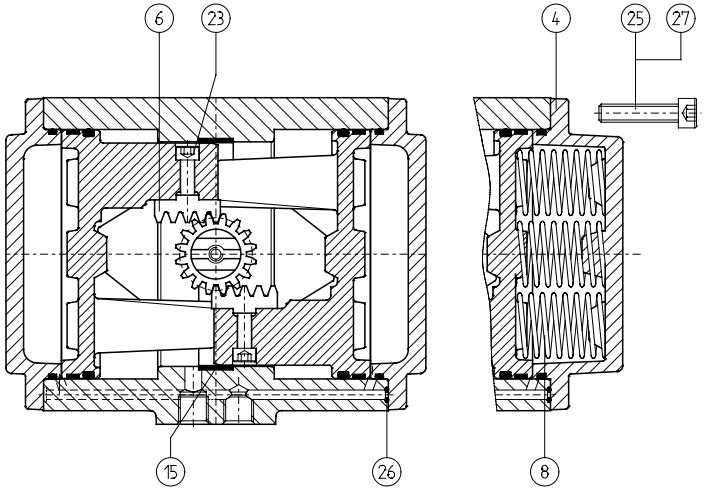

DOUBLE ACTING PD **SINGLE ACTING PS**

Parts				Materials		Executions		
Nr.		Description	Qty.	Description	Specification	Std	S.S. Shaft	CSR
1		Body	1	Aluminum Alloy	UNS A13600, ASTM B85	-	-	6
2		Piston	2	Aluminum Alloy	UNS A03560, ASTM B26	-	-	-
3		Endcap PDA	2	Aluminum Alloy	UNS A13600, ASTM B85	-	-	6
4		Endcap PSA	2	Aluminum Alloy	UNS A13600, ASTM B85	-	-	6
5		Drive pinion	1	Aluminum Alloy	UNS 1 77075, ASTM 7075 T6	1	4	4
6		Gear Rack	2	Steel	UNS G10950, ASTM A108	-	-	-
8		Spring	14	Carbon Spring Steel	UNS G10860, ASTM A228	2	2	2
9	*	Bearing Bush	1	Nylatron GS	PA6.6 + MoS2	-	-	-
10	*	Bearing Bush	1	Delrin	POM	-	-	-
14	*	Guide band	2	PTFE, Carbon filled	PTFE + 25% C	-	-	-
15	*	Guide band	2	PTFE, Carbon filled	PTFE + 25% C	-	-	-
16	*	O-ring	2	Nitrile Rubber	Buna N	-	-	-
17	*	O-ring	2	Nitrile Rubber	Buna N	-	-	-
18	*	O-ring	1	Nitrile Rubber	Buna N	-	-	-
19	*	O-ring	1	Nitrile Rubber	Buna N	-	-	-
20	*	Spring Clip	1	Carbon Spring Steel	MIL - R-212 48B	2	5	5
21	*	Thrust Washer	1	ZEDEX 100 K	-	-	-	-
23		Bolt	4	Alloy Steel	12.9 ASTM F568	-	-	-
24		Endcap bolt PDA	20	Alloy Steel	8.8 ASTM F568	2	4	4
25		Endcap bolt PSA	20	Alloy Steel	8.8 ASTM F568	2	4	4
26	*	O-ring	2	Nitrile Rubber	Buna N	-	-	-
27		Threaded insert	20	Steel	UNS G10430, ASTM A29	3	3	3

* Recommended spare parts (contained in Repair kit)

Notes

1 Hard anodized
2 Deltatone® Coating
3 Zinc plated and passivated
4 Stainless Steel AISI 304
5 Stainless Steel, X35CrM017
6 CSR Coating (see A4.204.02)
7 P4000 has a stainless steel (AISI 304) locking ring between spring clip (20) and thrust washer (21)
8 P4000 has in the springs a guiding bush (PVC)

Remark

All materials are European origin, listed are the nearest US equivalents

Finish

Standard : Polyester non-TGIC based powder coating (see data sheet A4.204.01)
CSR : CSR Coating (see data sheet A4.204.02)

Copyright © Emerson Process Management. The information in this document is subject to change without notice.

CONSTRUCTION, PARTS AND MATERIALS DSA ACTUATOR

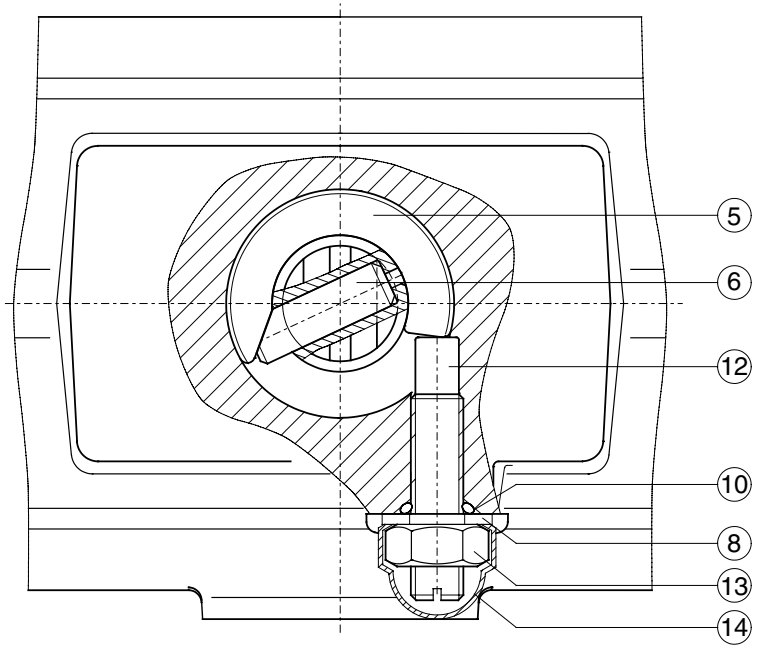

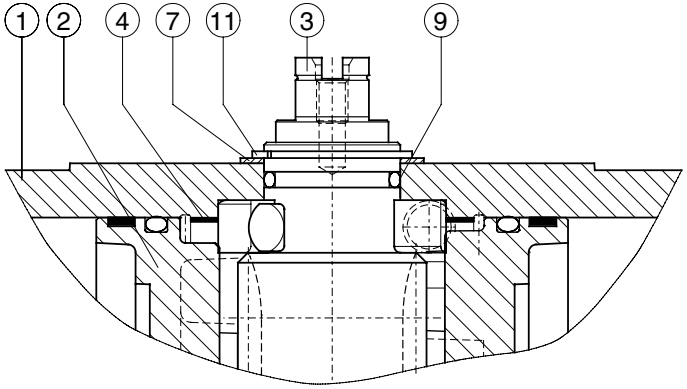

Nr.		Description	Qty.	Material	Specification	Note
1		Body DSA	1	Aluminum Alloy	UNS A13600, ASTM B85	-
2		Piston DSA	2	Aluminum Alloy	UNS A03560, ASTM B26	-
3		Drive pinion DSA	1	Aluminum Alloy	AlZnMgCu1.5, DIN 1725/1	1
4	*	Guide Band DSA	1	Nylatron GS	UNS A13600, ASTM B85	-
5		Cam for stroke adj. DSA	1	Stainless Steel	UNS A13600, ASTM B85	-
6		Shaftpin for stroke adj. DSA	1	Chrome nickel steel	UNS G10860, ASTM A228	-
7	*	Washer	1	ZEDEX 100 K	-	-
8	*	Washer	1	Nylon	UNS G10860, ASTM A228	-
9	*	O-ring shaft top	1	Nitrile Rubber	C45, DIN 17200	-
10	*	O-ring limit stop bolt DSA	1	Nitrile Rubber	PA6.6 + MoS2	-
11		Circlip	1	Carbon spring steel	PTFE + 25% C	2
12		Limitstop bolt DSA	1	Stainless Steel	PA6.6 + MoS2	-
13		Nut	1	Stainless Steel	POM	-
14		Nut Cover	1	Polyethylene	Buna N	-

* Recommended spare parts (contained in Repair kits DSA)

Finish
Polyester non-TGIC based powder coating (see data sheet A4.204.01)

Note
1 Hard anodized
2 Deltatone® coating

Remark
This data sheet shows only the extra or specific parts of a DSA actuator.
For all the other parts see data sheet A1.101.33

Copyright © Emerson Process Management. The information in this document is subject to change without notice.

LOW TEMPERATURE ACTUATOR SPECIFICATIONS

-40°C / +80°C
-40°F / +176°F

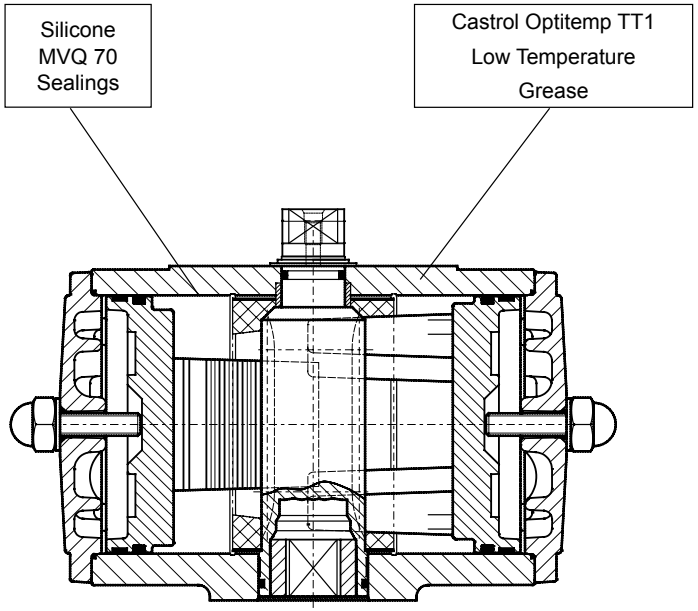

Description

A double piston, rack and pinion pneumatic actuator incorporating a three point piston support system, anti-blowout spindle and with high duty synthetic bearings at all bearing points.

This version is a standard aluminum actuator, but incorporating parts and materials suitable for low temperature operation.

Note

When operating actuators in sub-zero temperatures (< 0°C or < 32°F) care should be taken to counter the effects of freezing condensate inside the actuator.

Specification

Max. pressure : 120 psi (8 bar)
Torque : Standard
Media : Air or non corrosive gas
Temperature : -40°F to +176°F (-40°C to +80°C)
Finish : Polyester non-TGIC based powder coating (see data sheet A4.204.01)

Spare parts

Dedicated low temperature spare parts are available for maintenance or make a standard actuator suitable for low temperature operation.

Materials

Part	Material		Specifications	Remark
Housing	Aluminum Alloy		UNS A13600, ASTM B85	
Drive Shaft	Aluminum Alloy		UNS 1 77075, ASTM 7075 T6	Hard anodized
	Steel (180° rotation)		ETG100 or 42CrMo4V XM	Zinc Plated type > P750
	Stainless Steel		Sandvic 1802, SS2382 or X35CrM017	type > E950
Piston	Aluminum Alloy		UNS A03560, ASTM B26	
Sealings	Silicone MVQ 70 O-rings		-/-	
Grease	Castrol Optitemp TT1		-/-	
Shaft bearings	Top :	Delrin	POM	
	Bottom :	Nylatron	PA6.6 + MoS2	
Piston bearings	PTFE		25% Carbon filled	
Body bearings	PTFE	(“P” series)	25% Carbon filled	
	Nylatron	(“E” series)	PA6.6 + MoS2	
Shaft thrust washer	ZEDEX 100 K		-/-	
End cap bolts	Stainless Steel	(“E” series)	AISI 304 A2	
	Alloy Steel	(“P” series)	8.8 DIN 912	Deltatone® coating
Springs	Carbon Spring Steel		UNS G10860, ASTM A228	Deltatone® coating

Copyright © Emerson Process Management. The information in this document is subject to change without notice.

HIGH TEMPERATURE ACTUATOR SPECIFICATIONS

-20°C / +120°C
-4°F / +248°F

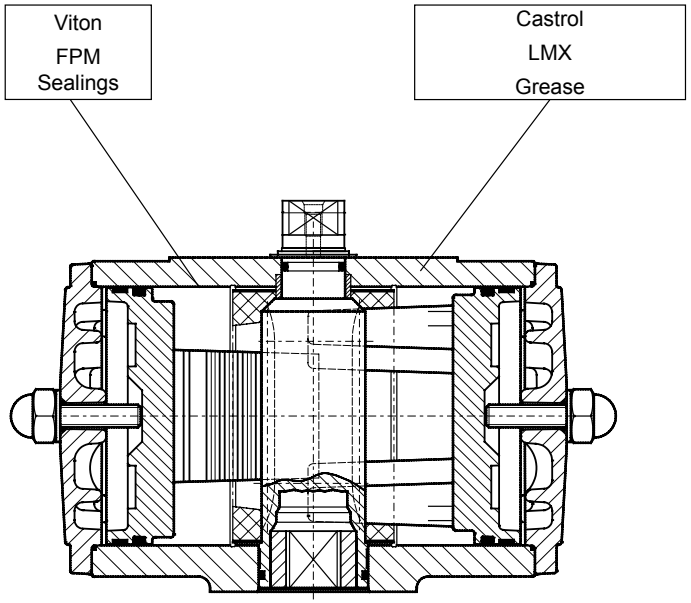

Description

A double piston, rack and pinion pneumatic actuator incorporating a three point piston support system, anti-blowout spindle and with high duty synthetic bearings at all bearing points.

This version is a standard aluminum actuator, but incorporating parts and materials suitable for low temperature operation.

Specification

Max. pressure : 120 psi (8 bar)
Torque : Standard
Media : Air or non corrosive gas
Temperature : -4°F to +248°F (-20°C to +120°C)
Finish : Polyester non-TGIC based powder coating (see data sheet A4.204.01)

Spare parts

Dedicated high temperature spare parts are available for maintenance or make a standard actuator suitable for low temperature operation.

Materials

Part	Material		Specifications	Remark
Housing	Aluminum Alloy		UNS A13600, ASTM B85	
Drive Shaft	Aluminum Alloy		UNS 1 77075, ASTM 7075 T6	Hard anodized
	Steel (180° rotation)		ETG100 or 42CrMo4V XM	Zinc Plated type > P750
	Stainless Steel		Sandvic 1802, SS2382 or X35CrM017	type > E950
Piston	Aluminum Alloy		UNS A03560, ASTM B26	
Sealings	Viton FPM O-rings		-/-	
Grease	Castrol LMX		-/-	
Shaft bearings	Top :	Delrin	POM	
	Bottom :	Nylatron	PA6.6 + MoS2	
Piston bearings	PTFE		25% Carbon filled	
Body bearings	PTFE	(“P” series)	25% Carbon filled	
	Nylatron	(“E” series)	PA6.6 + MoS2	
Shaft thrust washer	ZEDEX 100 K		-/-	
End cap bolts	Stainless Steel	(“E” series)	AISI 304 A2	
	Alloy Steel	(“P” series)	8.8 DIN 912	Deltatone® coating
Springs	Carbon Spring Steel		UNS G10860, ASTM A228	Deltatone® coating

Copyright © Emerson Process Management. The information in this document is subject to change without notice.

INSTALLATION OF SPRINGS OF P-SERIES ACTUATOR

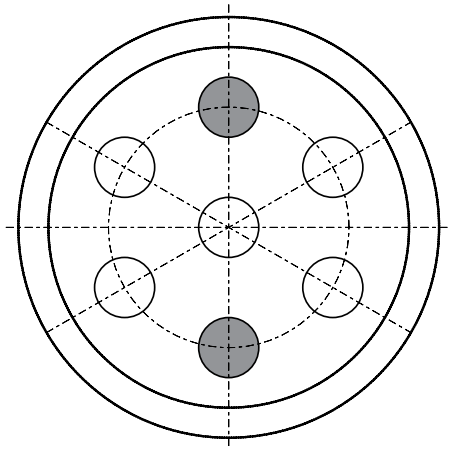

4 SPRINGS

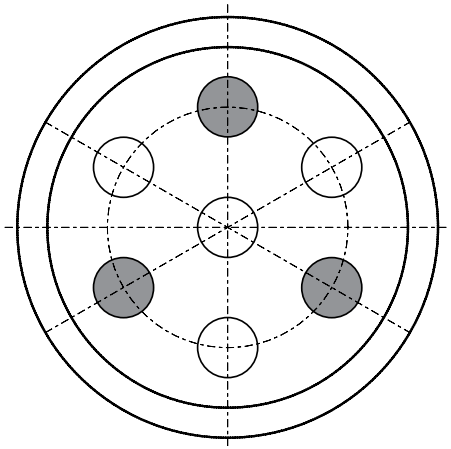

6 SPRINGS

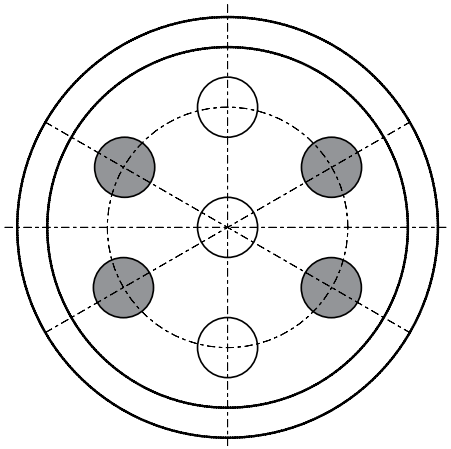

8 SPRINGS

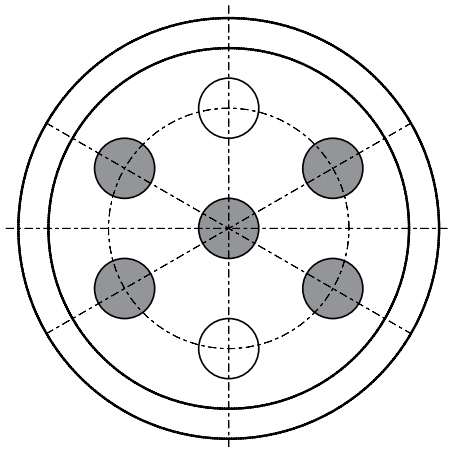

10 SPRINGS

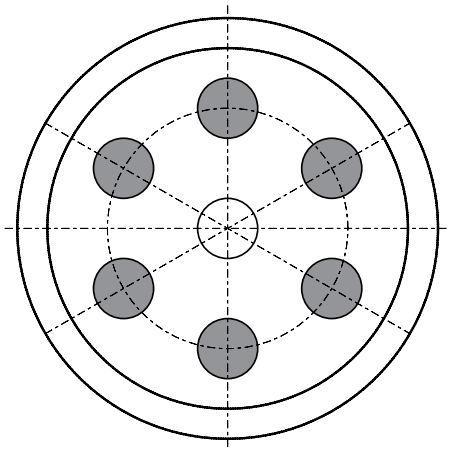

12 SPRINGS

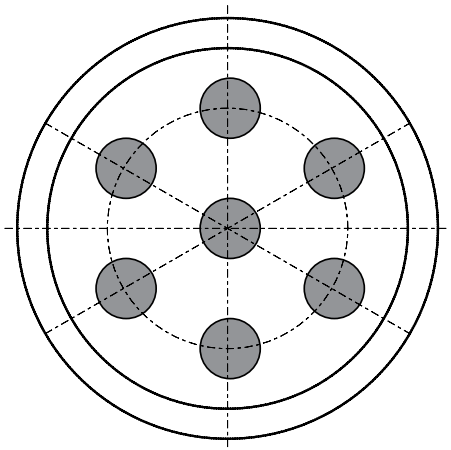

14 SPRINGS

SPRING

Copyright © Emerson Process Management. The information in this document is subject to change without notice.

INSTALLATION OF SPRINGS OF E-SERIES ACTUATOR

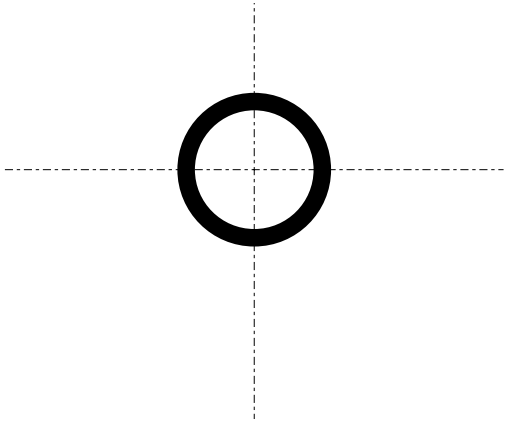

SPRING SET No. 1
inner spring

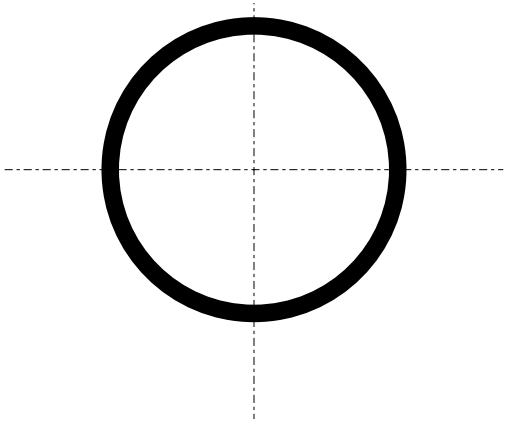

SPRING SET No. 2
mid spring

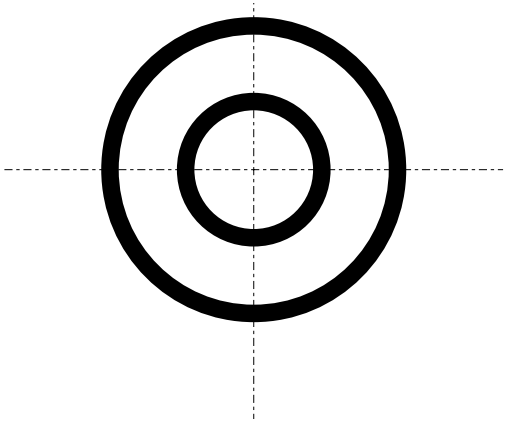

SPRING SET No. 3
inner spring
mid spring

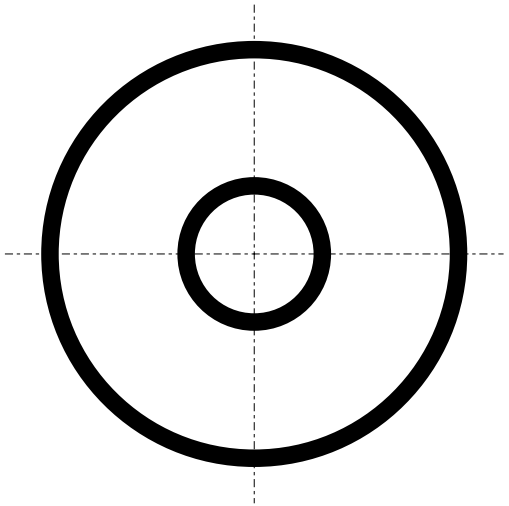

SPRING SET No. 4
inner spring
outer spring

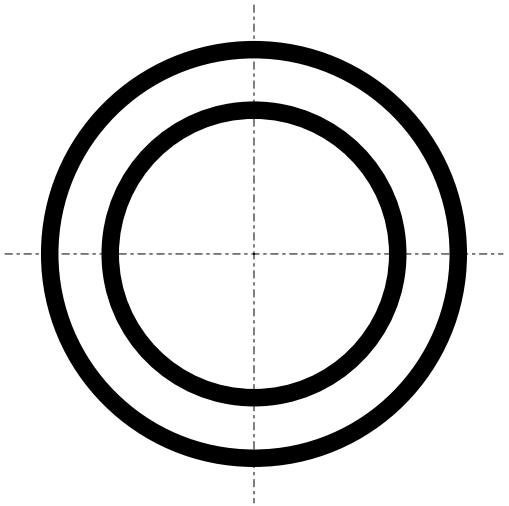

SPRING SET No. 5
mid spring
outer spring

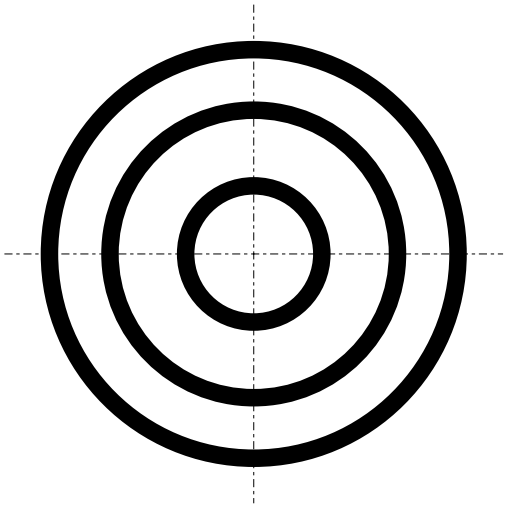

SPRING SET No. 6
inner spring
mid spring
outer spring

Copyright © Emerson Process Management. The information in this document is subject to change without notice.

DOUBLE ACTING ACTUATOR ASSEMBLY MODES

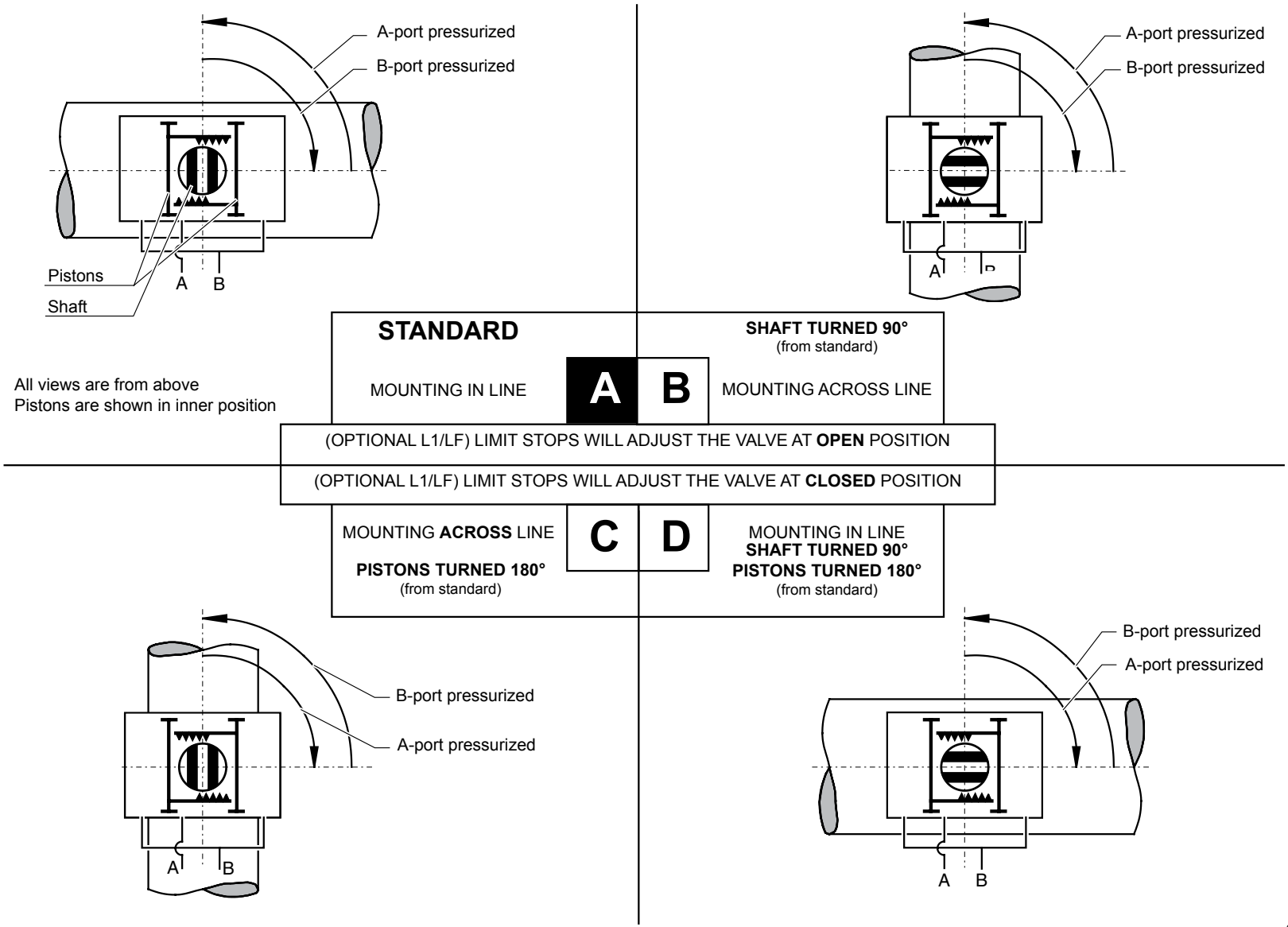

Copyright © Emerson Process Management. The information in this document is subject to change without notice.

SPRING RETURN ACTUATOR ASSEMBLY MODES

E/P

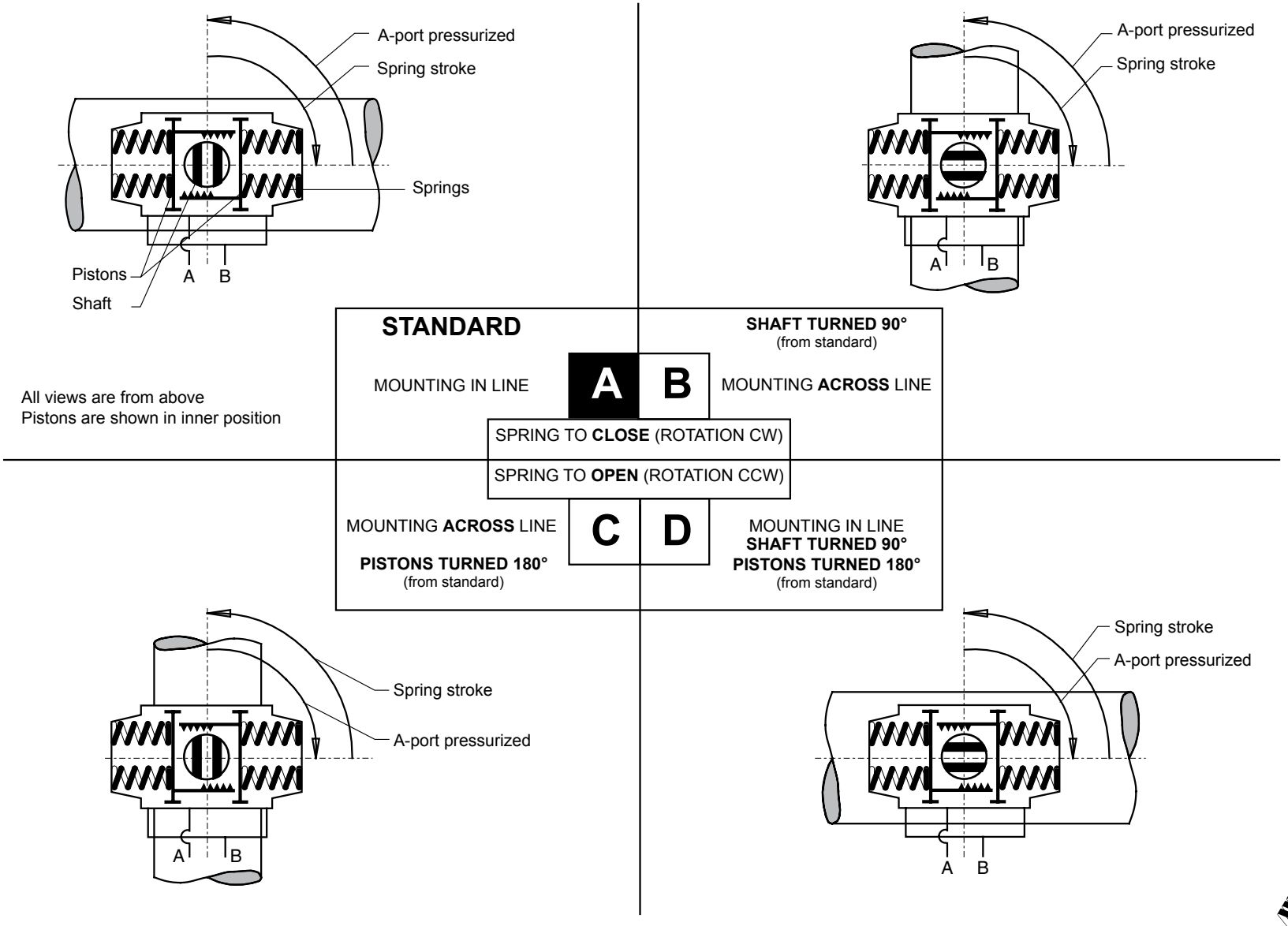

Copyright © Emerson Process Management. The information in this document is subject to change without notice.
Updated data sheets can be obtained from our website **www.El-O-Matic.com** or from your nearest Valve Automation Center ***USA**: +1 281 477 4100 **Europe**: +31 74 256 10 10 **Asia-Pacific:** +65 6501 4600*

EL-O-MATIC STANDARD CORROSION PROTECTION SYSTEM

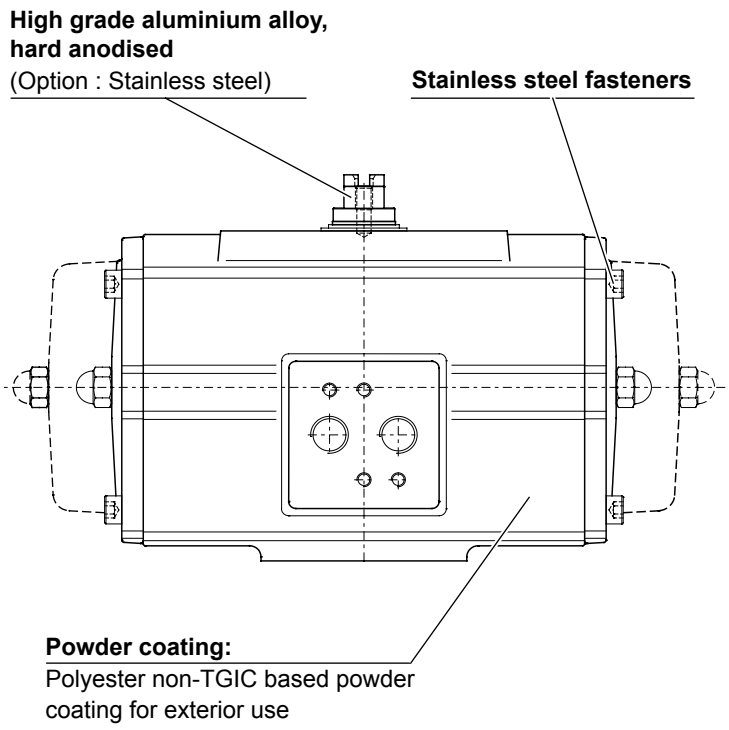

Description

The corrosion protection system of standard El-O-Matic E&P series pneumatic actuators consist of the following treatments or materials:

1 De-greasing

All aluminum parts are de-greased before the powder coating is applied by washing with an alkaline solution to assure the best bonding between the aluminum surface and the coating.

2 Powder coating

- Polyester non-TGIC based powder coating for exterior use.
- The powder coating is applied cold using automatic electrostatic spray equipment and is cured at minimum 190°C (374°F) offering excellent anti color fade and weather resistance.
- The powder coating thickness is 80µm (3.15 mils) minimum, and 160µm (6.3 mils) maximum.
- Good resistance against most chemical bases, acids, solvents, alkalis and oils at normal temperatures.
- Excellent exterior mechanical durability.
- The coating has passed a salt spray test according to ASTM B117 for 500 hours.
  The powder coating is virtually solvent free, and therefore environmentally friendly.

3 High grade & hard anodised aluminium pinion

Actuators with high grade & hard anodised aluminium pinions, passed a 500 hours salt spray test. Optional stainless steel pinions are available for a higher corrosion resistance.

4 Stainless steel or Deltatone treated external steel parts

External parts are stainless steel or steel alloy with a Deltatone® treatment.

Technical data

Coating	: Polyester non-TGIC based powder coating		
Salt spray test	: DIN 50021 / ASTM B117: 500 hours		
Color	: Yellow (RAL 1007)		
Materials	: Housing	: Aluminium alloy	
	: Pinion	: High grade aluminium alloy, hard anodised (Option : Stainless steel)	
	: Fasteners	: Stainless steel or alloy steel with Deltatone® treatment	
	: Tagplate	: Stainless steel	
Application	: Standard EL-O-MATIC E & P series pneumatic actuators For Non-Standard actuators, see data sheet 4.204.05		
Option	: CSR coating for excellent corrosion resistance See data sheet A4.204.02		

Copyright © Emerson Process Management. The information in this document is subject to change without notice.

EL-O-MATIC ACTUATOR WITH CSR COATING CSR

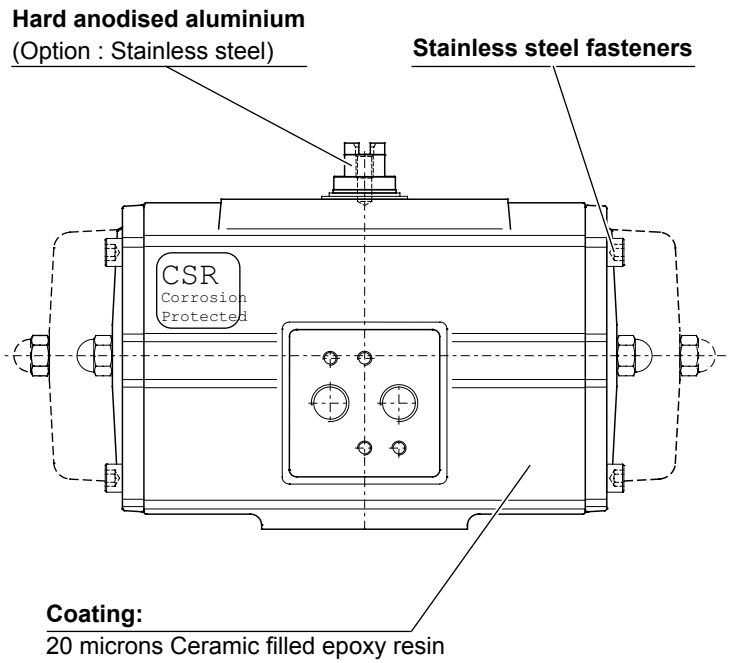

Description

EL-O-MATIC CSR-actuators have an excellent corrosion resistance in environments where the actuator is in contact with chemicals like caustic soda. The CSR coating itself is resistant to at least 1000 hours of salt spray test exposure. Together with the excellent mechanical properties, the CSR coating is "the" solution for very harsh environments

CSR actuator housing and caps are completely coated (inside and out) with a ceramic filled fluoropolymer based epoxy resin, impregnated by a temperature of 240°C into the aluminium surface.

Approximately 40% of the coating is impregnated into the aluminium, 60% stays on the surface of the component as a seal.

Technical data

Coating	: Ceramic filled fluoropolymer based epoxy resin		
Layer thickness	: 20 microns		
Salt spray test	: DIN 50021 / ASTM B117: 1000 hours		
Max. temperature	: -4° to 176°F (20° to + 80°C)		
Materials	: Housing	: Aluminium alloy	
	: Shaft	: Aluminium hard anodised	
		: (Option : Stainless steel)	
	: Fasteners	: Stainless steel	
	: Tagplate	: Stainless steel	
Application	: Optional on all EL-O-MATIC actuators		

Chemical resistances

Resistance to various inorganic chemicals, organic chemicals, gasolines, oils, detergents, etc. is generally good to excellent, but also depends on temperature and/or concentration. More detailed information available at data sheet A4.204.021

Copyright © Emerson Process Management. The information in this document is subject to change without notice.

CHEMICAL RESISTANCE LIST FOR CSR COATING

Inorganic chemicals

1	Ammonium hydroxide (10%)	2	Nitric acid (10%)
1	Calcium chloride (~50%)	3	Nitric acid (50%)
3	Chlorine	1	Hydrochloric acid (10%)
3	Chromic acid	1	Hydrochloric acid (concentrated)
3	Hydrofluoric acid (50%)	1	Sulphuric acid (50%)
1	Caustic potash solution (10%)	3	Sulphuric acid (concentrated)
1	Sodium hypochlorite (saturated)	2	Sulphur dioxide
1	Caustic soda solution (10%)	1	Sulphur hexafluoride
1	Caustic soda solution (saturated)	2	Nitric oxide
1	Phosphoric acid (10%)	1	Hydrogen peroxide (100%)
1	Phosphoric acid (50%)		

Organic chemicals

3	Acetone	1	Glycerine
3	Acetonitrile	1	Hexane
3	Aniline	1	Isooctane
2	Benzene	1	Isopropanol
1	n-Butanol	1	Methanol
3	Butyl acetate	3	Methylene chloride
3	Chlorobenzene	3	Methyl ethyl ketone
3	Chloroforme	3	N.N-Dimethylformamide
3	o-Chlorophenol	3	N-Methylpyrrolidon
1	Cyclohexane	1	Oxalic acid
3	Cyclohexanone	1	Perchloroethylene
3	1,2-Dichloroethane	1	Petroleum ether
2	Diethyl ether	3	Phenol
2	Dioxane	1	Carbon bisulphide
1	Glacial acetic acid	1	Turpentine
1	Ethanol	2	Tetrachloroethane
3	Ethyl acetate	2	1,1,1-Trichloroethane
1	Ethylene glycol	1	Tetrachloromethane
1	Formaldehyde	3	Trichloroethylene
2	Freon 11	2	Toluene
2	Freon 22	1	Xylene

1 Excellent

2 Limited resistance; it is recommended to perform field tests under the specified conditions.

3 Not recommended

Fuels/lubricants

1	Two-star petrol (50°C)
1	Four-star petrol (50°C)
1	Fuel M 15 (50°C)
1	Diesel oil
1	Kerosene
1 to 2	Hypoid bevel gear oil Shell Spirax HD 90 (150°C)
1	Transmission oil Shell Spirax MA 80 (150°C)

Chemicals

1	Automatic transmission fluid Shell Dextra 11D 20-137 (150°C)
1	Engine oil, mineral, Mihag 1500-40 (150°C)
1	Engine oil, synthetic, Mobil SHC 10 W-40
3	Brake fluid Hydraulan DOT 4
1	Roller bearing grease DIN 51 825

Technical detergents

2	Genkeene
2	1,1,1- Trichloroethane
2	Triklone A
2	Perchloroethylene

Miscellaneous fluids

1	Glysantin (BASF)/water
1	Plasticizer DOP
1	Suds
1	Washing-up liquids
1	Household detergents
1	Linseed oil
1	Milk
1	Soapsuds
1	Silicone oils

Note: This list has been composed with great care. However, EL-O-MATIC cannot be held responsible, either for any errors in this list or for their consequences.

Because of continued testing this list is subject to change without notice.

Copyright © Emerson Process Management. The information in this document is subject to change without notice.

DIMENSION SHEET STANDARD 180° ACTUATOR

180°

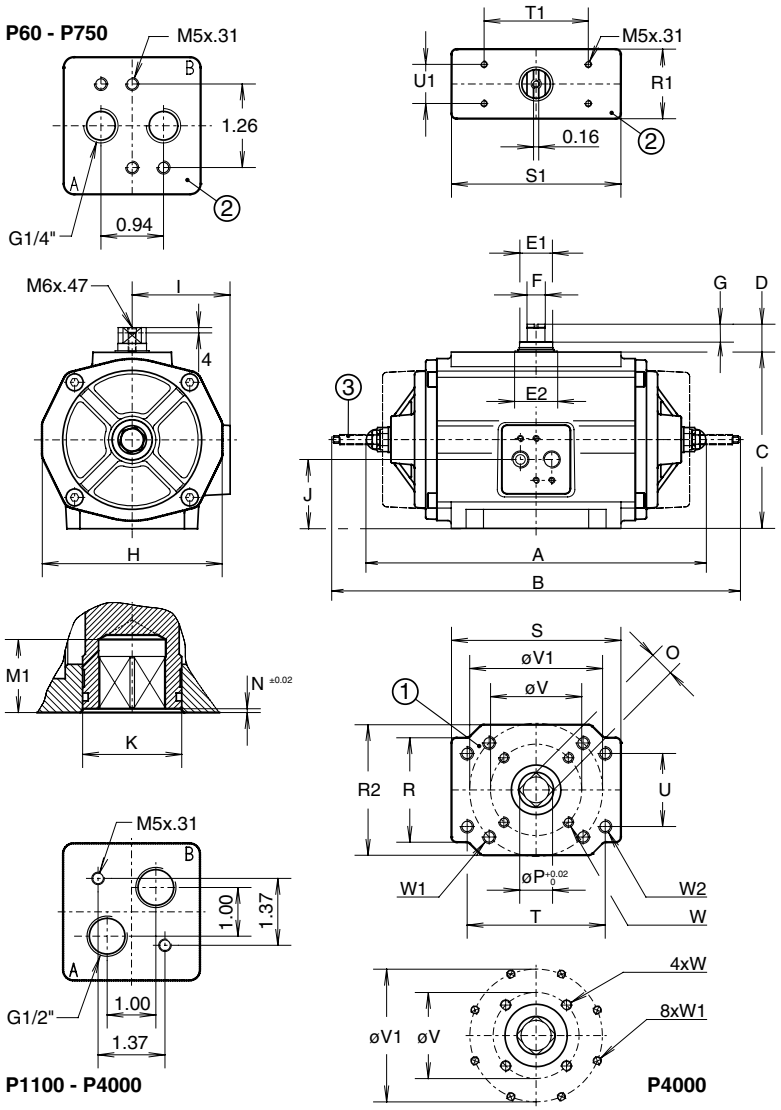

Dim. in mm.	ACTUATOR TYPE								
	E12	P60	P150	P280	P500	P750	P1100	P2500	P4000
A DA	For E12 dimensions see A1.103.102	9.17	11.61	13.94	16.30	17.60	19.76	24.92	29.61
B SR		10.08	13.07	17.09	19.57	21.77	25.24	32.17	42.95
C		3.98	5.31	6.30	7.48	9.21	9.72	14.02	14.96
D		0.79	0.79	0.79	1.18	1.18	1.18	1.18	1.18
E1		0.63	0.87	1.02	1.42	1.42	1.77	2.17	2.52
E2		0.91	1.18	1.38	1.77	1.77	2.17	2.56	3.15
F		0.39	0.55	0.55	0.75	0.75	1.18	1.42	1.42
G		0.47	0.47	0.47	0.75	0.75	0.39	0.39	0.39
H		3.98	5.43	6.61	7.56	9.41	9.84	13.54	14.65
I		2.28	2.95	3.50	4.29	5.28	5.31	7.20	7.87
J		1.69	2.09	2.72	3.74	4.57	4.92	7.01	7.48
K		1.10	1.50	1.89	2.20	2.20	2.95	3.35	4.72
M1		1.06	1.06	1.22	1.50	1.50	2.01	2.60	3.03
N		0.04	0.04	0.06	0.06	0.08	0.10	0.12	0.06
O max.		0.556	0.674	0.871	1.068	1.068	1.424	1.817	2.173
O min.		0.551	0.669	0.866	1.063	1.063	1.417	1.811	2.165
P		0.713	0.992	1.110	1.425	1.425	1.898	2.370	2.843
R		2.36	3.15	3.98	4.37	5.51	5.51	6.69	6.69
R1		2.01	2.36	2.80	3.19	3.94	4.72	6.30	6.30
R2		2.76	3.94	-	-	-	-	-	10.31
S		4.37	5.12	5.55	6.34	8.27	8.27	11.42	11.42
S1		4.37	5.12	5.55	5.55	6.30	8.27	9.65	9.65
T		-	-	-	-	-	-	9.24	-
T1		3.15	3.15	3.15	5.12	5.12	5.12	5.12	5.12
U		-	-	-	-	-	-	3.83	-
U1		1.18	1.18	1.18	1.18	1.18	1.18	1.18	1.18
		F05	F07	F07	F10	F10	F14	F16	F16
V		1.969	2.756	2.756	4.016	4.016	5.512	6.496	6.496
W		M6 x .35	M8 x .51	M8 x .51	M10 x .63	M10 x .63	M16 x .79	M20 x1.18	M20 x1.18
		F07	F10	F10	F12	F12	-	-	F25
V1		2.756	4.016	4.016	4.921	4.921	-	-	10.000
W1		M8 x .51	M10 x .63	M10 x .63	M12 x .63	M12 x .63	-	-	M16 x 0.98
W2		-	-	-	-	-	-	M16 x 0.98	-

Note

1. Flange to ISO 5211, square drive to DIN 3337
2. Top and Solenoid flange to VDI/VDE 3845 (NAMUR).
   P1100 P2500 and P4000 have a non-NAMUR solenoid flange with 1/2" entries.
3. 180° actuators are standard equipped with "L1" limit stops. 120° or 135° rotation is possible with optional LF-option (See data sheet A1.503.01)

Copyright © Emerson Process Management. The information in this document is subject to change without notice.

180° DOUBLE ACTING ACTUATOR TORQUE (In.lb.) 180°

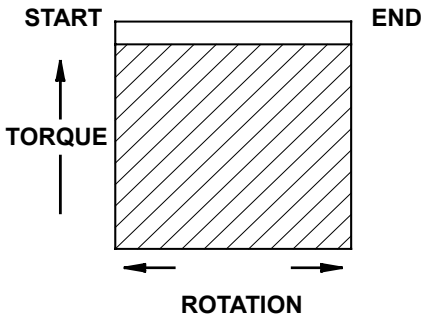

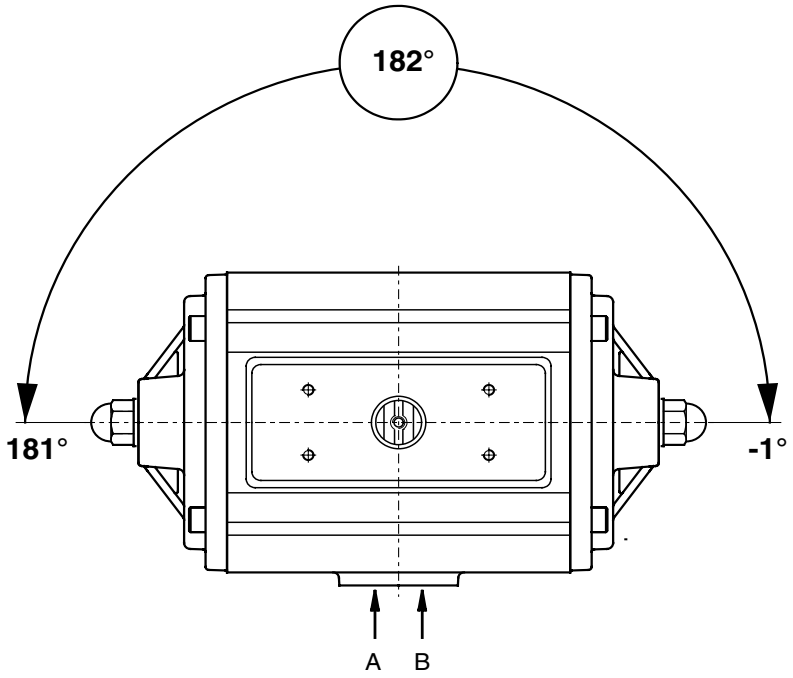

Actuator type		Torque (in in.lb) Supply Pressure (PSI)					
		30	40	50	60	70	80
ED	12	44	59	74	89	104	119
PD	60	104	139	175	210	245	281
PD	150	262	351	441	530	620	709
PD	280	493	662	830	999	1167	1336
PD	500	872	1170	1467	1765	2063	2361
PD	750	1297	1740	2182	2625	3068	3511
PD	1100	1912	2566	3219	3872	4525	5179
PD	2500	4407	5913	7418	8923	10429	11934
PD	4000	7440	9981	12522	15064	17605	20146

Note

1. Emerson Process Management recommends that the valve manufacturer supply the maximum required torque values (Including any adjustments or suggested safety factors for valve service conditions or application).
   Additionally, the valve manufacturer must identify at which position(s) and direction(s) of rotation (Counter Clock Wise or Clock Wise) these maximum requirements occur.
2. If in doubt, or you require any assistance with sizing actuators, do not hesitate to contact your nearest Emerson's Valve Automation Division representative.
3. Pressure on port "A" opens the actuator*
4. The actuator is shown in closed position*
5. Do not exceed the maximum supply pressure of 6 bar / 87psi.

(*code A, data sheet A1.503)

Copyright © Emerson Process Management. The information in this document is subject to change without notice.

180° SPRING RETURN ACTUATOR TORQUE (In.lb.)

180°

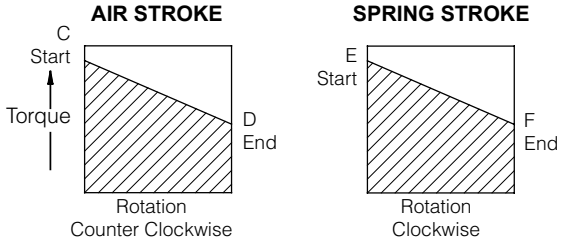

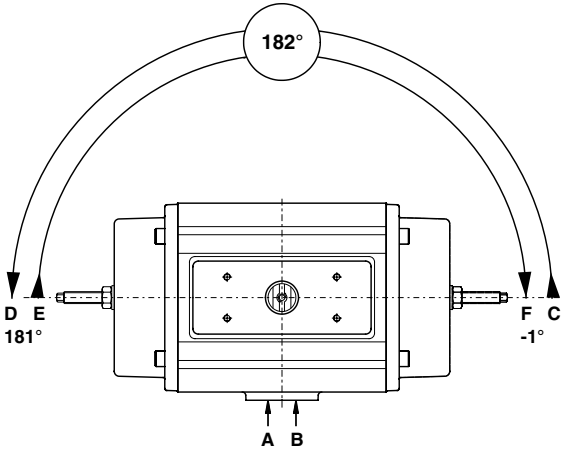

Spring nr.		Air Stroke (in.lb.) SUPPLY PRESSURE (PSI)										Spring Stroke (in.lb.)	
Actuator type		40		50		60		70		80			
		C	D	C	D	C	D	C	D	C	D	E	F
ES12	2	-	-	33	9	49	25	65	41	81	57	63	41
PE60	8	70	19	105	55	141	90	176	125	212	161	112	62
	10	-	-	88	24	123	60	159	95	194	131	141	78
	12	-	-	-	-	106	30	142	65	177	101	169	93
	14	-	-	-	-	-	-	124	35	160	71	197	109
PE150	8	185	76	274	165	364	255	453	344	543	433	258	150
	10	-	-	233	96	322	186	411	275	501	365	322	187
	12	-	-	-	-	280	117	370	206	459	296	387	225
	14	-	-	-	-	239	48	328	137	418	227	451	262
PE280	8	-	-	493	193	662	361	830	530	999	698	597	303
	10	-	-	-	-	578	202	746	370	915	539	746	379
	12	-	-	-	-	-	-	662	211	830	379	896	455
	14	-	-	-	-	-	-	-	-	746	220	1045	531
PE500	8	-	-	965	256	1263	554	1561	852	1859	1149	1134	452
	10	-	-	-	-	1138	251	1435	549	1733	847	1417	565
	12	-	-	-	-	-	-	-	-	1608	544	1701	678
	14	-	-	-	-	-	-	-	-	-	-	1984	791
PE750	8	-	-	1470	549	1913	992	2356	1434	2799	1877	1529	641
	10	-	-	-	-	1735	583	2178	1026	2621	1469	1912	801
	12	-	-	-	-	-	-	2000	618	2443	1060	2294	961
	14	-	-	-	-	-	-	-	-	2265	652	2676	1121
PE1100	8	1454	430	2108	1083	2761	1736	3414	2389	4067	3043	1999	1000
	10	-	-	1830	549	2483	1202	3136	1855	3790	2509	2499	1250
	12	-	-	-	-	2205	668	2858	1321	3512	1975	2999	1500
	14	-	-	-	-	-	-	2581	787	3234	1441	3499	1750
PE2500	8	2625	890	4124	2389	5622	3888	7121	5386	8620	6885	4675	2934
	10	-	-	3309	1140	4807	2639	6306	4137	7804	5636	5844	3668
	12	-	-	2494	-109	3992	1390	5491	2889	6989	4387	7013	4401
	14	-	-	-	-	3177	141	4676	1640	6174	3138	8182	5135
PE4000	8	4475	1548	7015	4088	9555	6628	12096	9169	14636	11709	7890	4952
	10	-	-	5639	1981	8180	4521	10720	7061	13260	9602	9863	6190
	12	-	-	4264	-127	6804	2414	9344	4954	11885	7494	11835	7429
	14	-	-	-	-	5428	306	7969	2847	10509	5387	13808	8667

Note

1. Emerson Process Management recommends that the valve manufacturer supply the maximum required torque values (Including any adjustments or suggested safety factors for valve service conditions or application).
   Additionally, the valve manufacturer must identify at which position(s) and direction(s) of rotation
   (Counter Clock Wise or Clock Wise) these maximum requirements occur.
2. If in doubt, or you require any assistance with sizing actuators, do not hesitate to contact your nearest Emerson's Valve Automation Division representative.
3. Pressure on port "A" opens the actuator*
4. The actuator is shown in closed position*
5. Do not exceed the maximum supply pressure of 6 bar / 87psi.

(*code A, data sheet A1.504)

Copyright © Emerson Process Management. The information in this document is subject to change without notice.

Contact Us: Emerson Process Management, Valve Automation facilities at your nearest location:

NORTH & SOUTH AMERICA

19200 Northwest Freeway
Houston TX 77065
USA
T +1 281 477 4100
F +1 281 477 2809

2500 Park Avenue West
Mansfield, OH 44906
USA
T +1 419 529 4311
F +1 419 529 3688

13840 Pike Road
Missouri City, Texas 77489
USA
T +1 281 499 1561
F +1 281 499 8445

Av. Hollingsworth,
325, Iporanga Sorocaba,
SP 18087-105
Brazil
T +55 15 3238 3788
F +55 15 3228 3300

MIDDLE EAST & AFRICA

P. O. Box 17033
Dubai
United Arab Emirates
T +971 4 811 8100
F +971 4 886 5465

P. O. Box 105958
Abu Dhabi
United Arab Emirates
T +971 2 697 2000
F +971 2 555 0364

P. O. Box 3911
Al Khobar 31952
Saudi Arabia
T +966 3 814 7560
F +966 3 814 7570

P. O. Box 10305
Jubail 31961
Saudi Arabia
T +966 3 340 8650
F +966 3 340 8790

P. O. Box 32281
Doha
Qatar
T +974 4 576777
F +974 4 315448

24 Angus Crescent
Longmeadow Business Estate East
P.O. Box 6908; Greenstone; 1616
Modderfontein, Extension 5
South Africa
T +27 11 451 3700
F +27 11 451 3800

EUROPE

Asveldweg 11
7556 BR Hengelo (O)
The Netherlands
T +31 74 256 1010
F +31 74 291 0938

Siemensring 112
47877 Willich
Germany
T +49 2154 499 660
F +49 2154 499 6613

25, Rue de Villeneuve
Silic – BP 40434
94583 Rungis
France
T +33 1 49 79 73 00
F +33 1 49 79 73 99

Via Montello 71/73
20038 Seregno (Milan)
Italy
T +39 0362 2285 207
F +39 0362 2436 55

6 Bracken Hill
South West Industrial Estate
Peterlee SR8 2LS
United Kingdom
T +44 191 518 0020
F +44 191 518 0032

2A Szturmowa Str
02-678 Warsaw
Poland
T +48 22 45 89 237
F +48 22 45 89 231

C/ Francisco Gervás, 1
28108 Alcobendas – Madrid
Spain
T +34 0913 586 000
F +34 0913 589 145

Letnikovskaya Str. 10-2
115114 Moscow
Russia and FSU
T +7 495 981 98 11
F +7 495 981 98 10

ASIA PACIFIC

No. 9 Gul Road
#01-02 Singapore 629361
T +65 6501 4600
F +65 6268 0028

9/F Gateway Building
No. 10 Ya Bao Road
Chaoyang District
Beijing 100020
P.R.China
T +86 10 8572 6666
F +86 10 8572 6888

No.1 Lai Yuan Road
Wuqing Development Area
Tianjin 301700
P.R.China
T +86 22 8212 3300
F +86 22 8212 3308

Lot 13112, Mukim Labu
Kawasan Perindustrian Nilai
71807 Nilai, Negeri Sembilan
Malaysia
T +60 6 799 2323
F +60 6 799 9942

471 Mountain Highway
Bayswater, Victoria 3153
Australia
T +61 3 9721 0200
F +61 3 9720 0588

Delphi B Wing, 601 & 602
6th Floor, Central Avenue
Powai, Mumbai – 400 076
India
T +91 22 6662 0566
F +91 22 6662 0500

© 2013 Emerson Process Management. All rights reserved.
The Emerson logo is a trademark and service mark of Emerson Electric Co. “Brand mark listing” are marks of one of the Emerson Process Management family of companies.
All other marks are property of their respective owners.
The contents of this publication are presented for information purposes only, and while every effort has been made to ensure their accuracy, they are not to be construed as warranties or guarantees, express or implied, regarding the products or services described herein or their use or applicability. All sales are governed by our terms and conditions, which are available on request. We reserve the right to modify or improve the designs or specifications of our products at any time without notice.
EL-O-MATIC® is a registered trademark of EL-O-MATIC B.V.

ACCUTRAK ROTARY MODELS: 1040/9358/2004/9044/9468/5004 5044/2007/9479/5050 INSTALLATION AND OPERATIONS MANUAL

IOM: Tech-385		**Revision: B**	
Prepared By: Herb Tucker	**Date:** 8/23/05	**Drafting Work Order:** 19367	**ECN:** 11813
Reviewed By: Jim Kilian	**Date:** 12/7/11	**Approved By:** Tony Paolini	**Date:** 11/7/11

This IOM contains confidential information and is issued in confidence on the condition that it be returned on demand and not be copied, reproduced, disclosed to others or used in manufacture of the subject matter thereof without the written consent of Westlock Controls

WESTLOCK CONTROLS CORPORATION
280 MIDLAND AVENUE, SADDLE BROOK, NJ 07663 TEL: 201-794-7650 FAX: 201-794-0913

www.westlockcontrols.com

Revision History

Revision
23 Aug, 2005 Initial release • 4/7/10 rev. A • 11/9/10 rev. B

Westlock Controls Offices

USA
Westlock Controls Corp.
280 North Midland Ave.Saddle Brook, NJ 07663
Phone: (201) 794-7650 •Fax: (201) 794-0913
Email: westlockinfo@westlockcontrols.com
Internet http://www.westlockcontrols.com

Westlock Service Center
6735 Exchequer Dr.
Suite 100
Baton Rouge, LA 70809
Phone: (225) 296-8118 •Fax: (225) 296-5188
Email: stevesmith@westlockcontrols.com

Europe
Westlock Controls UK
Chapman Way, Tunbridge Wells
Kent, England TN23EF
Phone: 011-44-189-251-9046 •Fax: 011-441-892-516279
Email: sales@westlockuk.com
Internet: http://www.westlockuk.com

South America
Westlock Equipmentos De Controles Ltda.
Rua, Sao Paulo 291
Alphaville, Barueri
Sao Paulo, CEP 06465-130
Phone: 011-55-11-7291-0930 •Fax: 011-55-11-7291-0931
Email: comercial@westlock.com.br
Internet: http://www.westlock.com.br/

1. Introduction

1.1. Product Certification

1040/9358: CSA Type 4 (Cert. #LR 81057-3)
2004: CSA Type 4 (Cert. #LR 81057-7)
9044: NEMA 4, 4X (Cert. not applicable)
9468: FMc NI/I/2/ABCD/T4 0° C<= Ta<60° Type 4X, 6P, IP67; DIP/II/2/FG/ T4 0°C<=Ta<60°C (Cert. #3036618C)
5004/5044: FMc IS/I, II, III/1/ABCDEFG/T6 Ta=60°C Entity WD-11880, NI/I/2/ABCD/T5 Ta=60°C Entity WD-11880; Entity Parameters for P&F NJ2-V3-N, Vmax=16 V, Imax=25 mA, PI=34 mW, Ci=40 nF, Li=50 μH (Cert. #3008802); NJ2-11-N-G, Vmax=16 V, Ii=25 mA, PI=34 mW, Ci=30 nF, Li=50 μH
2007/9479: FMc XP/I/1/CD/T6 Ta=60°C, DIP/II/1/EFG/T6 TA=60°C; 9479 ONLY: N/I/I/2 ABCD/T4 Ta=60°C, Type 4, 4X (Cert. #3029311C)
5050: FM XP/I/1/CD/T6 Ta=50°C, DIP/II/1/EFG/T6 Ta=50°C, NI/I/2/ABCD/T4 Ta=50°C, Type 4, 4X (Cert. #3026687)

1.2. Warnings



- Never remove enclosure cover or make/break electrical connections with power connected to the unit.
- Perform all wiring in accordance with site and local codes and the National Electric Code ANSI-NFPA-70 (US) or the Canadian Electric Code Part I (Canada) for the appropriate area classifications.
- Confirm that the AccuTrak model being installed is approved for the hazardous area (see Product Certification section above or unit ID label).
- Confirm that supply power to switches is within rated specifications listed on the unit identification label.
- Protect the unit from exposure to aggressive substances or atmospheres to ensure that hazard rating is not compromised.

1.3. Description

AccuTrak valve position monitors are intended for use as both visual and electrical position indicators for discrete rotary devices, most commonly pneumatically actuated 2-way quarter-turn or 3-way valves. An AccuTrak monitor is not limited for use in only quarter-turn valve applications, but that application will be assumed for the purpose of this document. In addition to the monitoring features, AccuTrak monitors may serve as wiring junctions for accessories where additional terminals, conduit entries and wiring codes permit.

1.4. Principles of Operation

An AccuTrak monitor mounts to an actuator via a mounting kit, usually sold separately. The unit shaft couples to the actuator shaft directly via NAMUR adaptation, or via a coupling provided in the mounting kit. As the actuator

rotates the unit shaft, adjustable cams on the shaft actuate mechanical or proximity switches inside the unit enclosure, at the limits of rotary travel set by the customer. The switches are pre-wired to a terminal strip in the enclosure, permitting easy connection of switch output to external electrical monitoring systems or indication devices. The visual Beacon indicator on the enclosure cover indicates 90° rotary travel between OPEN and CLOSED valve positions, unless ordered optionally for other angular strokes or 3-way valve applications.

1.5. Special Features/Conditions

To avoid build-up and discharge of static electricity in a hazardous area, only clean Westlock units with a static-free cloth dampened with water. Avoid the use of alcohol-based cleaners.

2. Ordering

Ordering guides for all AccuTrak product series covered by this IOM are available through a local Westlock distributor, the current Westlock Controls catalog literature or the Westlock Controls website at www.westlockcontrols.com. Spare parts lists for refurbishments or repairs are also available for common AccuTrak models.

3. Definitions

NAMUR- This term, in the context of mounting brackets and shafts, refers to the NAMUR VDI/VDE 3845 standard for the dimensions of actuator output shafts and auxiliary equipment mounting hole patterns. In the context of inductive proximity sensors, NAMUR refers to conformance of the sensor to DIN 19 234, allowing its use with any NAMUR style amplifier/isolator.

Switch- A manual or mechanically actuated device for making, breaking or changing the connections in an electric circuit. This term will be used also for magnetic or inductive proximity sensors for the purpose of this document.

4. Installation

4.1. *Mounting Instructions*

Required Tools: Open-end wrenches or adjustable wrench to fit all sizes of hex head bolts in the mounting kit.

1. Obtain a mounting kit suited for the actuator/valve, commonly available through a local Westlock Controls distributor.
2. Attach the mounting bracket and coupler (if required) to the unit housing with the hardware provided.
3. Attach the unit and mounting system to the actuator.
4. Ensure proper axial alignment between unit shaft, coupler and actuator shaft. Failure to ensure alignment could result in long-term stress-related failure of unit shaft in high cycle or high torque applications.

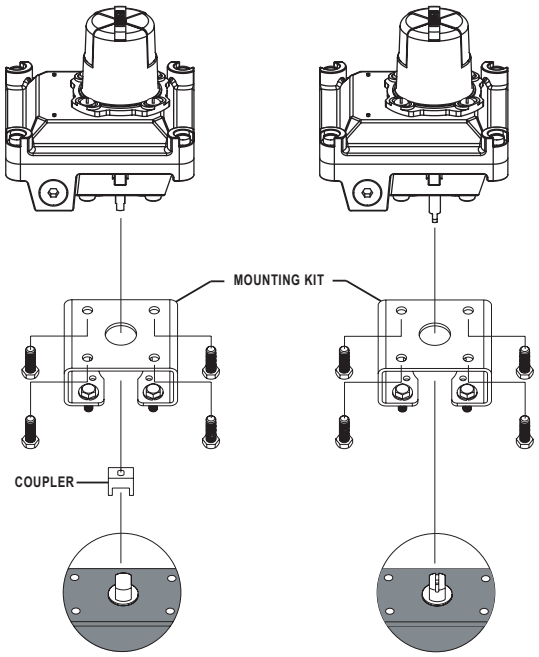

4.2. Calibration

Consult factory or a Westlock distributor for setting procedures of units with six switches or four switches and transmitter.

Note 1: Switch actuation can be confirmed using a signal detection device such as a multimeter or ohmmeter, set for “continuity”.

Note 2: For NAMUR P+F NJ2-V3-N type sensors, use test meter, P+F model #1-1350 or equivalent to check sensor actuation and calibration. If the proper meter is not available, contact the factory for additional assistance with the test procedure.

Note 3: Adjust cams by hand by pushing/pulling the cam against the shaft spring to disengage from the mating spline, rotating to adjust and re-engaging firmly onto spline.

Required Tools: Signal detection device (see note 1); slotted screw drivers for cover screws (M4, #10 or 5/16 by model)

Switch Adjustment (two switches):

1. Remove unit cover as follows: loosen (but do not remove) captive screws, rotate cover slightly to grip corners, pull firmly.
   DO NOT PRY COVER WITH TOOLS.
2. With valve in the closed position, adjust bottom cam until bottom switch (#2) actuates.

3. Stroke valve to the open position, adjust top cam until top switch (#1) actuates.
4. Cycle actuator several times to confirm proper switch indication at each end of stoke. Finely adjust cams if necessary.
5. Skip to Field Wiring section or replace unit cover, applying approximately 20 in-lbs of torque to cover screws.

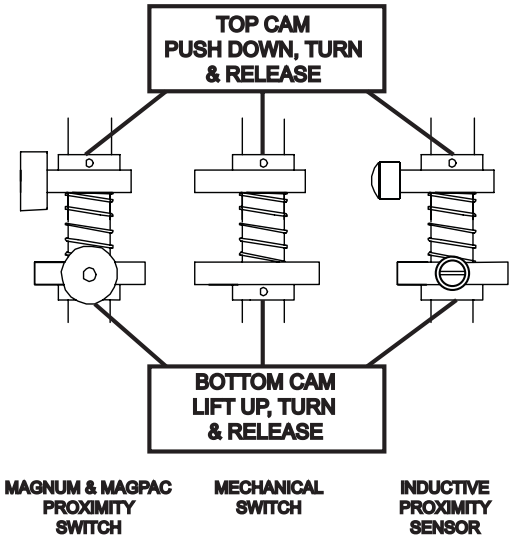

Switch Adjustment (four switches, no CS transmitter):
Follow steps as above for the calibration of two switches but adjust the first and third cams from the top for switches #1 and #2 and the second and fourth cams from the top for switches #3 and #4 (see illustration below).

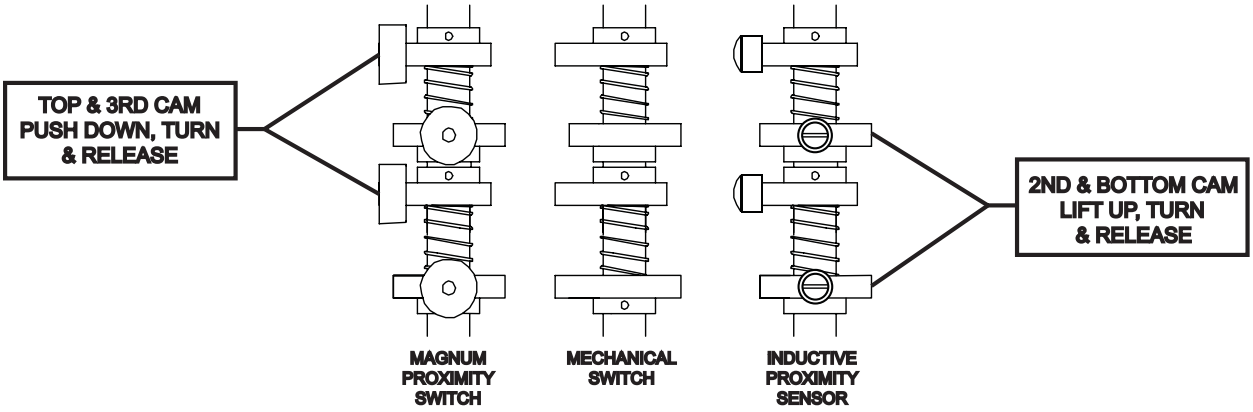

Transmitter setting (optional CS transmitter):
For the calibration of optional current signal (CS) transmitter, see Westlock Controls Installation/Operations Manual TECH-301, available through your local sales representative or at www.westlockcontrols.com.

Beacon Adjustment:

Note: Skip this step if cover is flat or Beacon already displays the correct valve status.
Required Tools: slotted screw driver for #12 screws.

1. For two-way OPEN/CLOSED: remove, rotate and re-fasten outer beacon to synchronize displayed position with valve position.
2. For three-way flow paths: remove, rotate and re-fasten outer beacon and/or inner beacon coupler to synchronize displayed flow path with valve/actuator flow path.

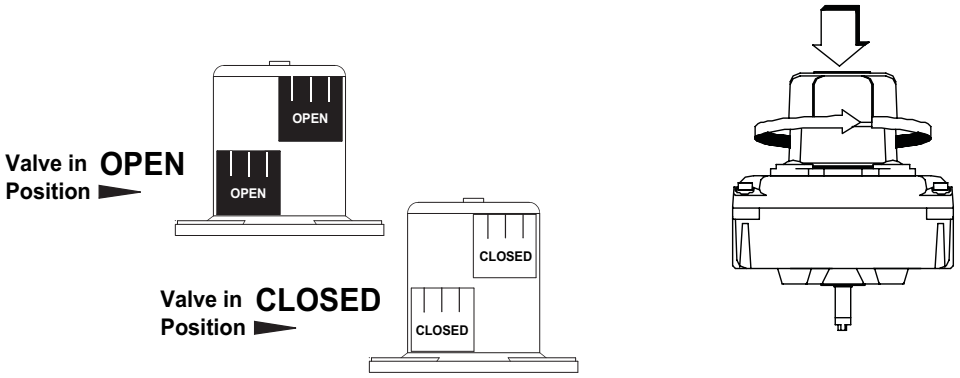

5. Field Wiring

STOP
WARNING

See the warnings section of this document for important warnings pertaining to the wiring of AccuTrak units. Remove and replace cover before and after wiring, per instructions given in the Switch Adjustment section above.

Required Tools: slotted screw drivers for terminal strip screws (#2), cover screws (M4, #10 or 5/16 by model), and grounding screw (#8 or M4 by model); wire strippers as required for field wires.

1. Wire the AccuTrak monitor strictly according to the wiring diagram on the inside of the enclosure cover.
2. Confirm that the ground wire is secure under the green grounding screw in the enclosure.
3. Seal all unused conduit entries as required with suitably certified plugs having an ingress protection rating of IP67 or better.
4. Ensure that only suitably certified cable glands are used, having an ingress protection rating of IP67 or better.
5. Ensure that the temperature rating of all field wiring meets the service temperature range of the application.

6. Maintenance and Repair

ATTENTION

Maintenance or repair of Westlock equipment must only be done by Westlock Controls or by qualified personnel that are knowledgeable about the installation of electromechanical equipment in hazardous areas. All parts

needed for repairs or maintenance must be purchased through a Westlock Controls authorized distributor to maintain warrantee and to ensure the safety and compliance of the equipment.

No routine maintenance of Westlock AccuTrak units is recommended when units are installed in environments for which they are designed. Severe environments may warrant regular replacement of field units every two to five years for maximum performance and safety.

Troubleshooting

Problem: *No signal at the control device*

- Check that power supply to the loop is functioning correctly and adequate to power all devices on the loop;
- Check that power being supplied to switches is within the rated specifications;
- Check wiring integrity immediately at the connection to the control device;
- Check field wiring coming into the AccuTrak terminal strip for proper connection and good wire preparation practices (approximately ¼" of insulation removed and all strands intact);
- Check that field wiring is no larger than 12AWG for proper fit in terminal strip and compliance with terminal strip rating;
- Check that wiring integrity is good between switches and terminal strip;
- Check that cams are set to trigger switches properly in each valve position (see Switch Adjustment section under installation);
- Use multimeter set for "continuity: to check for failed switch; observe continuity between common and normally open when triggered and between common normally closed when not triggered.

Problem: *Beacon does not display the correct flow path*

Reset Beacon per the Beacon Adjustment section under Calibration.

Problem: *Unit appears to be binding during valve stroke or unit shaft has broken*

Carefully measure and adjust axial alignment of unit shaft, coupler and actuator shaft to eliminate lifting or twisting of the coupler during travel.

Problem: *Unit has signs of moisture ingress*

- Check torque on cover screws
- Check gaskets and sealing surfaces for debris and clean if necessary
- Check that conduit connections are properly sealed, including gland fittings and quick-disconnect receptacles
- Check that conduit pipes are properly pitched to direct condensing moisture away from units
- Check that all unused conduit entries are properly sealed with suitably certified plugs having an ingress protection rating of IP67 or better.

Installation & Operating Instructions

AccuTrak Rotary

Models 360 & 366

With Mechanical Switches or MAGNUM Proximity Switches.

WESTLOCK CONTROLS CORPORATION

PRODUCT CERTIFICATIONS

360/366- XP C1 D1, Grps A-D; C2, Grps E-G; Nema 4, 4x, 7 & 9 / cUL, FM or CEPEL

Mounting

STOP WARNING

Confirm that the area is known to be non-hazardous before opening the cover of the enclosure and making or breaking any electrical connections.

1. Attach the correct mounting bracket and adapter (if required) to the AccuTrak housing with the hardware provided.

2. Operate the actuator to the fully closed position.

3. Attach the AccuTrak and mounting bracket to the actuator.

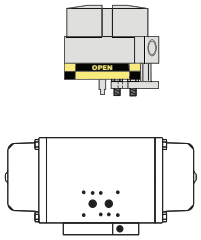

Wiring Instructions

STOP WARNING

All wiring must be in accordance with site and local codes and the National Electrical Code (ANSI-NFPA-70) for the appropriate area classifications.

STOP WARNING

All wiring must be in accordance with National Electrical Code (ANSI-NFPA-70) for area classifications. AccuTrak hazardous area approvals are model number based. Confirm that the model is appropriate for the area of use (see Product Certifications in this document for a listing of models and approvals).

ATTENTION

Always check the AccuTrak nameplate to confirm the agency approval ratings coincide with the application.

Note

The proper wiring diagram for your unit is shown on the inside of the enclosure cover.

1. Wire the AccuTrak Control Monitor by referring to the wiring diagram on the inside of the enclosure cover.

2. Confirm the ground wire is secure under the green grounding screw.

3. All unused cable entries must be plugged with suitably certified plugs that can maintain an ingress protection level of IP67.

4. The certification applies to equipment without cable glands. When mounting the enclosure in the hazardous area, only suitably certified cable glands and blanking elements must be used to maintain ingress protection of IP67.

6. For ambient temperatures below -10°C (14°F) and above +60°C (140°F), use field wiring suitable for both minimum and maximum ambient temperatures.

Switch Adjustment

1. With the valve in the closed position, lift the bottom cam and turn until the switch has activated and then release. The spring will push the cam back onto the splined shaft. Stroke the actuator to the open position and push down on the top cam and turn until the switch has activated and then release.

2. Operate actuator from one end of stroke to the other several times to check switch operation.

3. Replace the enclosure cover ensuring that the position of the valve has been noted, either fully open or fully closed.

4. Operate actuator from one end of stroke to the other several times to check switch operation.

280 Midland Ave., Saddle Brook, NJ 07663
Phone: (201) 794-7650 ❖ Fax: (201) 794-0913 ❖ E-mail: info@westlockcontrols.com ❖ www.westlockcontrols.com

Installation & Operating Instructions

AccuTrak Rotary

1000/2000/3000/4000/5000/9000 Product Families

With Mechanical Switches, Inductive Proximity Sensors, MAGNUM or MagPAC Proximity Switches.

WESTLOCK CONTROLS CORPORATION

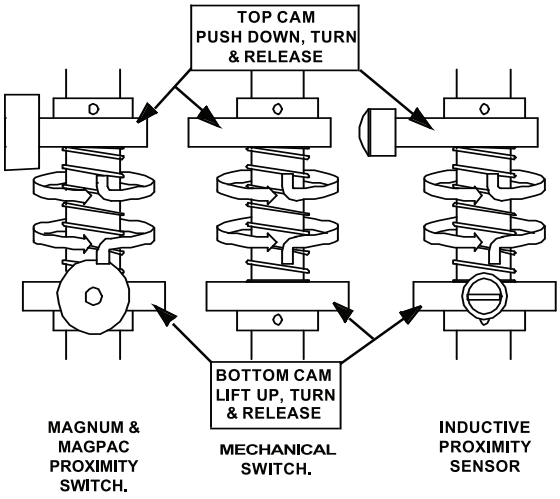

Conventional 90° Beacon Indication for ON/OFF Valves

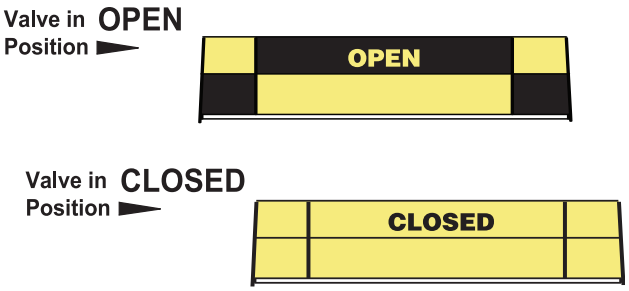

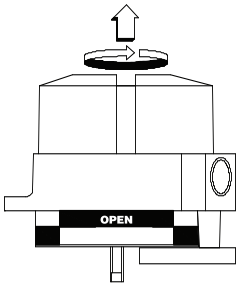

Three Way Valve Beacon Indication (when specified) Standard Flow Arrangements

PART NO.	ARRANGEMENT NUMBER
90• ROTATION	
BM3-1	
BM3-3	
BM3-5	
180• ROTATION	
BM3-7	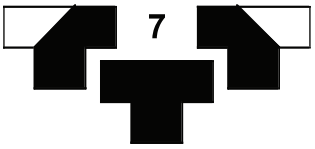
BM3-9	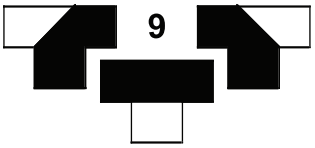

Switch/Sensor Electrical Ratings

Mechanical V3 SPDT Switch

15A @ 250VAC; 15A @ 125VAC; 0.5A @ 125VDC; 0.25A @ 250VDC or 6A @ 24VDC

Mechanical DPDT Switch

10A @ 250VAC; 10A @ 125VAC or 10A @ 28VDC

Magnum XT-90 Proximity Switch

Tungsten: 3A @ 120VAC; 1.5A @ 240VAC or 2A @ 24VDC
Rhodium: 0.295A @ 120VAC; 0.15A @ 240VAC or 1A @ 24/VDC

Special Conditions for Safe Use

1. All installations to be made in accordance with the NEC in the US and the CEC in Canada.

2. When installing the AccuTrak Position Monitor ensure that best engineering/installation practices are followed.

280 Midland Ave., Saddle Brook, NJ 07663
Phone: (201) 794-7650 ❖ Fax: (201) 794-0913 ❖ E-mail: info@westlockcontrols.com ❖ www.westlockcontrols.com

AccuTrak™ Rotary Position Monitors
Explosionproof – NEC

WESTLOCK CONTROLS

Fully integrated and encapsulated rotary valve position monitors that are certified for use in explosive atmospheres.



Features

- Touch set cams are hand adjustable, spring loaded and self-locking providing quick calibration of position switches and sensors.
- Terminal strips are pre-wired and numbered with generous working space for ease of use.
- Strong durable Beacon™ offers 360° visual indication available in a choice of styles and colors.
- Additional conduit for easy field wiring and mounting accessories as standard.
- Standardized mounting pattern for easy adaptation to common bracketry.
- NAMUR shaft output compliant to VDI/VDE 3845 available.
- Analog position transmitter option.
- Eliminator option for easy integration of external solenoid valve.
- Aluminum enclosures with ultra-low copper content (0.2% maximum) ensure robust performance in corrosive environments.
- Rugged stainless steel enclosures.

Technical Data	
Agency approvals	
Area classification (NEC 500)	
Models 2007/5050/9479	Class I, Division 1, Groups C & D/ T6 Ta = 60°C Class II, Division 1, Groups E, F & G/ T6 Ta = 60°C
Model 9479	Class I, Division 2, Groups A,B,C & D/T4 Ta = 60°C
Model 5050	Class II, Division 2, Groups E, F & G/T6
Model 360/366	Without eliminator conduit option Class I, Division 1, Groups B, C & D Class II, Division 1, Groups E, F & G
	With eliminator conduit option Class I, Division 1, Groups C & D Class II, Division 1, Groups F & G
Enclosure standards (ANSI/NEMA 250)	
All enclosures	Type 4, 4X
Switches	
Model 2007	V3 mechanical switches, SPDT DPDT mechanical switches GO® switches
Model 5050	Pepperl + Fuchs model NJ2-V3-N
Model 9479	Magnum (hermetically sealed proximity type) MagPAC bifurcated switch pack
Models 360/366	V3 mechanical switches, SPDT DPDT mechanical switches Magnum (hermetically sealed proximity type)
Enclosures	
Models 2007/5050/9479/360	Aluminum
Models 2007/9479/366	Stainless steel

Copyright © Westlock. All rights reserved

AccuTrak™ Rotary Position Monitors
Explosionproof – NEC

Models 2007/5050/9479 dimensions

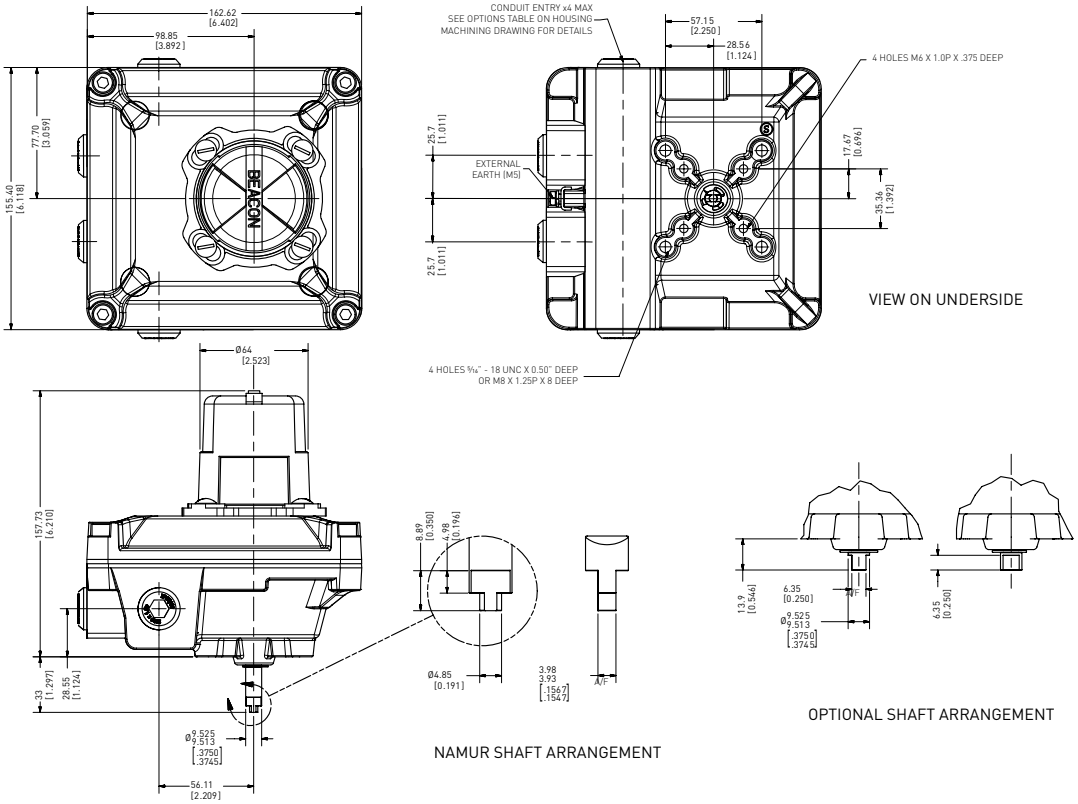

Dimensions in inches, where available metric dimension (mm) in parentheses.

Technical specifications

Materials of construction	
Enclosure	Aluminum with powder coat finish
Shaft and hardware	Stainless steel
Bushing	Oil impregnated bronze
Beacon visual indicator	Co-polyester
Drive shaft	
Standard	Double-D with ¼" A/F
Option	NAMUR standard VDI/VDE 3845
Available switches	
Model 2007	V3 mechanical switches, SPDT DPDT (form CC) mechanical switches GO® switches
Model 5050	Pepperl + Fuchs model NJ2-V3-N
Model 9479	Magnum (hermetically sealed proximity type) MagPAC bifurcated switch pack
Options	
Models 2007/9479	Stainless steel enclosure
Models 2007/9479	4-20 mA position transmitter

Please consult your sales office for any other requirements

Notes

Conduit entries
Accutrak position monitors are available with a choice of conduit entries. Please see the selection guide for standard entries.

Switches and sensors
For further information see our switches and sensors data sheet.

Eliminator fitting
A specialist eliminator fitting is available for the purpose of mounting an aftermarket solenoid valve.



Copyright © Westlock. All rights reserved

Models 360/366 dimensions

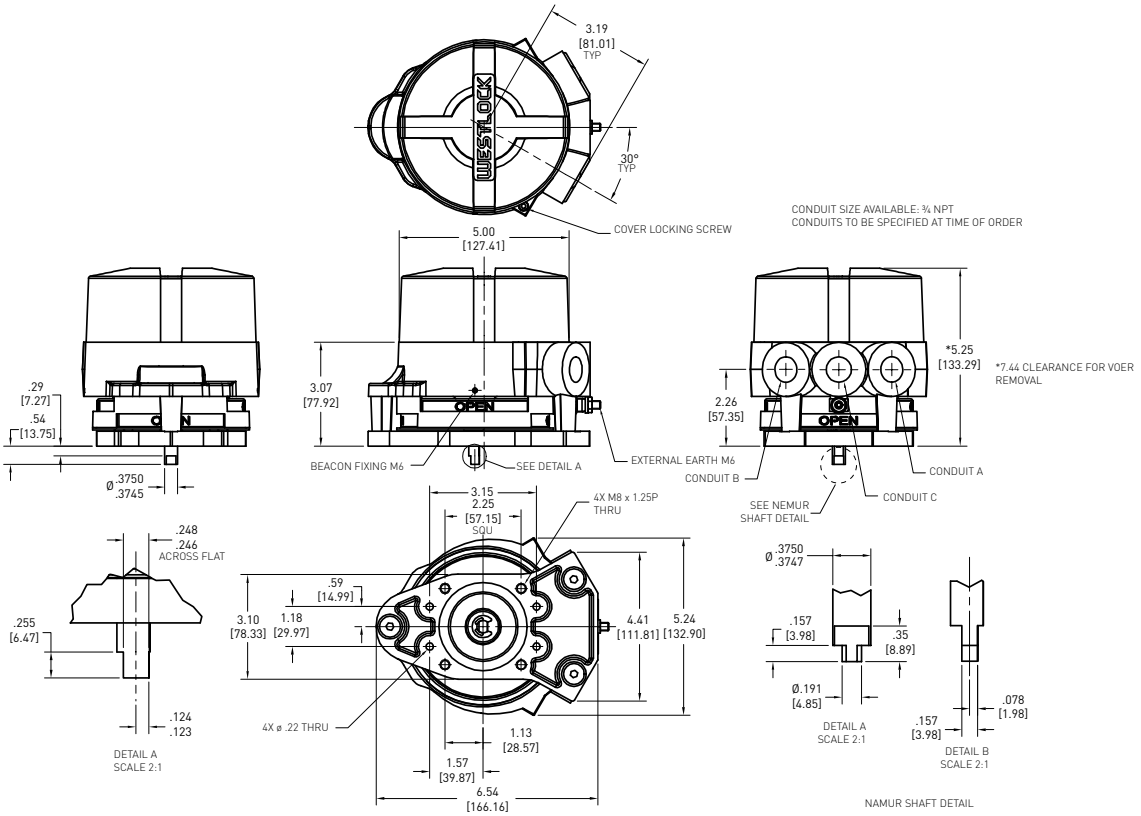

Dimensions in inches, where available metric dimension (mm) in parentheses.

Technical specifications

Materials of construction	
Enclosure	
Model 360	Aluminum with powder coat finish
Model 366	Stainless steel with electropolished finish
Shaft and hardware	Stainless steel
Bushing	Oil impregnated bronze
Beacon visual indicator	Co-polyester
Drive shaft	
Standard	Double-D with ¼" A/F
Option	NAMUR standard VDI/VDE 3845
Available switches	
	V3 mechanical switches, SPDT DPDT (form CC) mechanical switches Magnum, SPDT hermetically sealed switches, with tungsten contacts Magnum, SPDT hermetically sealed switches, with rhodium contacts
Options	
Models 360/366	4-20 mA position transmitter

Please consult your sales office for any other requirements

Notes

Conduit entries
Accutrak position monitors are available with a choice of conduit entries. Please see the selection guide for standard entries.

Switches and sensors
For further information see our switches and sensors data sheet.

Eliminator fitting
A specialist eliminator fitting is available for the purpose of mounting an aftermarket solenoid valve.



Copyright © Westlock. All rights reserved

Base model

2007 Aluminum enclosure

Shaft output

S Standard (double-D with ¼" Flats)
N NAMUR

Beacon

BY BM2-Y (standard)
RG BM2-RG (Red Closed/Green Open)
FE BM2-Y-FE (French/English)
AB BM2-B
AR BM2-R
B1 BM3-1
B3 BM3-3
B5 BM3-5
B7 BM3-7
B9 BM3-9
FC Flat cover

Conduit

2B Two ¾" NPT (F)
4B Four ¾" NPT (F)
2E One ¾" NPT (F) and one ½" NPT (M) eliminator fitting
4E Three ¾" NPT (F) and one ½" NPT (M) eliminator fitting
4F Two ¾" NPT (F) and two ½" NPT (M) eliminator fittings

Position switches

2M02 Two SPDT mechanical switches - 8 pt. TS
4M02 Four SPDT mechanical switches - 16 pt. TS
6M02 Six SPDT mechanical switches - 24 pt. TS
2M04 Two DPDT mechanical switches - 16 pt. TS
4M04 Four DPDT mechanical switches - 24 pt. TS
2M03 Two SPDT GO® switches - 12 pt. TS
4M03 Four SPDT GO® switches - 16 pt. TS

Analog position transmitter

00 None
CS 4-20 mA position transmitter (not available with 4M04, 6M02, 2M03, 4M03 switch options)
12 pt. TS w/2M02;
16 pt. TS w/2M04 and 4M02

2007	N	BY	2B	2M02	00	= Model number **2007NBY2B2M0200**

For stainless steel enclosure, please add 00124 to the end of your part number built with the selection guide above.

Notes

Specifying your position monitor

Specifying a position monitor is a complex process as there are many variables which affect each individual application. To ensure that you receive the best possible combination for your monitoring requirement, please contact your local sales office for advice and guidance from one of our experts.

Hazardous area classification

Please see our data sheet for further information on the global standards affecting the specification and installation of equipment in hazardous areas.

Copyright © Westlock. All rights reserved

Base model

5050	Aluminum enclosure

Shaft output

S	Standard (double-D with ¼" Flats)
N	NAMUR

Beacon

BY	BM2-Y (standard)
RG	BM2-RG (Red Closed/Green Open)
FE	BM2-Y-FE (French/English)
AB	BM2-B
AR	BM2-R
B1	BM3-1
B3	BM3-3
B5	BM3-5
B7	BM3-7
B9	BM3-9
FC	Flat cover

Conduit

2B	Two ¾" NPT (F)
4B	Four ¾" NPT (F)
2E	One ¾" NPT (F) and one ½" NPT (M) eliminator fitting
4E	Three ¾" NPT (F) and one ½" NPT (M) eliminator fitting
4F	Two ¾" NPT (F) and two ½" NPT (M) eliminator fittings

Position switches

2M08	Two P+F sensors model NJ2-V3-N - 8 pt. TS

Analog position transmitter

00	Not available

5050	N	BY	2E	2M08	00	= Model number **5050NBY2E2M0800**

Notes

Specifying your position monitor

Specifying a position monitor is a complex process as there are many variables which affect each individual application. To ensure that you receive the best possible combination for your monitoring requirement, please contact your local sales office for advice and guidance from one of our experts.

Hazardous area classification

Please see our data sheet for further information on the global standards affecting the specification and installation of equipment in hazardous areas.

Copyright © Westlock. All rights reserved

Base model

9479	Aluminum enclosure

Shaft output

S	Standard (double-D with ¼" Flats)
N	NAMUR

Beacon

BY	BM2-Y (standard)
RG	BM2-RG (Red Closed/Green Open)
FE	BM2-Y-FE (French/English)
AB	BM2-B
AR	BM2-R
B1	BM3-1
B3	BM3-3
B5	BM3-5
B7	BM3-7
B9	BM3-9
FC	Flat cover

Conduit

2B	Two ¾" NPT (F)
4B	Four ¾" NPT (F)
2E	One ¾" NPT (F) and one ½" NPT (M) eliminator fitting
4E	Three ¾" NPT (F) and one ½" NPT (M) eliminator fitting
4F	Two ¾" NPT (F) and two ½" NPT (M) eliminator fittings

Position switches

2M06	Two SPDT Magnum switches with tungsten contacts - 8 pt. TS
2M12	Two SPDT Magnum switches with rhodium contacts - 8 pt. TS
2M13	MagPAC module (SPST bifurcated switches with LEDs)
4M06	Four SPDT Magnum switches with tungsten contacts - 16 pt. TS
4M12	Four SPDT Magnum switches with rhodium contacts - 16 pt. TS
6M06	Six SPDT Magnum switches with tungsten contacts - 24 pt. TS
6M12	Six SPDT Magnum switches with rhodium contacts - 24 pt. TS

Analog position transmitter

00	None
CS	4-20 mA position transmitter (not available w/6M06 and 6M12) 12 pt. TS w/2M06 and 2M12 16 pt. TS w/4M06 and 4M12

9479	N	BY	2B	2M12	00	= Model number **9479NBY2B2M1200**

For stainless steel enclosure, please add 00124 to the end of your part number built with the selection guide above.

Notes

Specifying your position monitor

Specifying a position monitor is a complex process as there are many variables which affect each individual application. To ensure that you receive the best possible combination for your monitoring requirement, please contact your local sales office for advice and guidance from one of our experts.

Hazardous area classification

Please see our data sheet for further information on the global standards affecting the specification and installation of equipment in hazardous areas.

Copyright © Westlock. All rights reserved

Base model

360	Aluminum enclosure
366	Stainless steel enclosure

Shaft output

S	Standard (double-D with ¼" Flats)
N	NAMUR

Beacon

BY	BM2-Y (standard)
RG	BM2-RG (Red Closed/Green Open)

Conduit

2B	Two ¾" NPT (F)
3B	Three ¾" NPT (F) (360/366 only)
2E	One ¾" NPT (F) and one ½" NPT (M) eliminator fitting
3E	Two ¾" NPT (F) and one ½" NPT (M) eliminator fitting

Position switches

2M02	Two SPDT mechanical switches - 10 pt. TS
2M04	Two DPDT mechanical switches - 14 pt. TS
2M06	Two SPDT Magnum switches - 10 pt. TS
2M12	Two SPDT Magnum switches with rhodium contacts - 10 pt. TS
4M02	Four SPDT mechanical switches - 14 pt. TS
4M06	Four SPDT Magnum switches - 14 pt. TS
4M12	Four SPDT Magnum switches with rhodium contacts - 14 pt. TS

Analog position transmitter

00	None
CS	4-20 mA position transmitter - 10 pt. TS (only available with 2M02, 2M06, 2M12 switch options)

360	N	BY	2B	2M12	00	= Model number **360NBY2B2M1200**

Notes

Specifying your position monitor

Specifying a position monitor is a complex process as there are many variables which affect each individual application. To ensure that you receive the best possible combination for your monitoring requirement, please contact your local sales office for advice and guidance from one of our experts.

Hazardous area classification

Please see our data sheet for further information on the global standards affecting the specification and installation of equipment in hazardous areas.

US/Canada: Saddle Brook, NJ
Ph: +1 201 794 7650
Fax: +1 201 794 0913
E-mail: westlockinfo@westlockcontrols.com

South America: Sao Paulo, Brazil
Ph: +55 11 2588 1400
Fax: +55 11 2588 1410
E-mail: comercial@westlock.com.br

Europe: Kent, England
Ph: +44 1892 516277
Fax: +44 1892 707620
E-mail: sales@westlockuk.com

Asia: Singapore
Ph: +65 6768 5850
E-mail: sales@westlockuk.com

Copyright © Westlock. All rights reserved

Features

- Molded one-piece solenoid with highly efficient solenoid cartridge and special low wattage coil
- Increased ambient temperature capabilities up to 175˚F (80˚C)
- Designed for use in automation of plant control systems to provide:
  - -PLC compatibility
  - -Reduced battery drain
  - -Reduced heat rise
  - -Reduced wiring cost
- Wide selection includes 2/2 normally closed, 3/2 normally closed (including Quick Exhaust), 3/2 universal, 4/2, 5/2, & 5/3
- Air or inert gas only
- Lower-cost alternative to intrinsically safe valves in critical applications not requiring a safety barrier

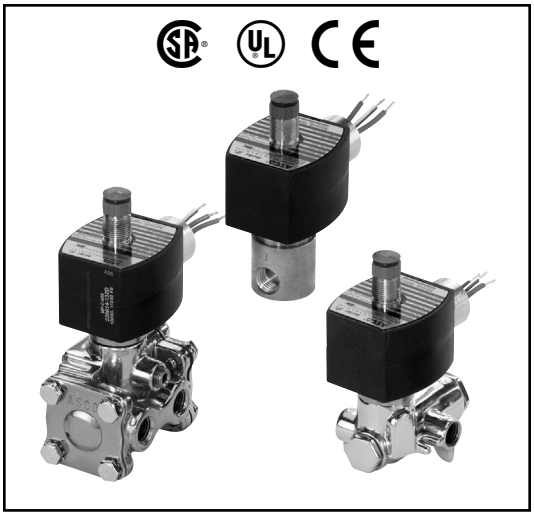

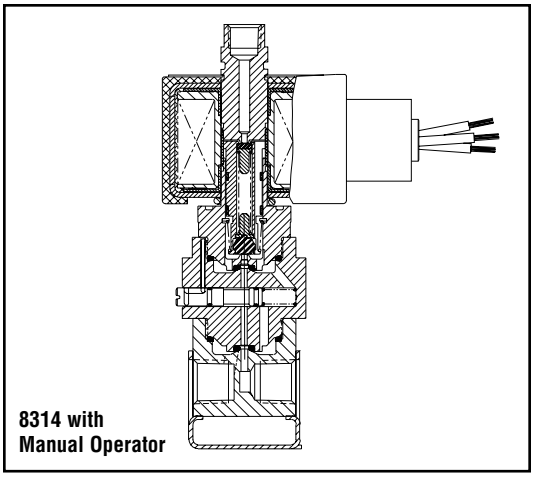

8314 with Manual Operator

Construction

Valve Parts in Contact with Fluids			
Body	Aluminum	Brass	Stainless Steel
Seals and Discs	PUR, NBR, FKM, CR, as listed		
Sleeve	304L Stainless Steel		
Core and Plugnut	430F Stainless Steel		
Core Springs	302 Stainless Steel		
Pilot Seat Cartridge (Series 8316 & 8344 only)	POM		
Rider Rings	PTFE		
Spring Retainer	POM		

Electrical

Description	Wattage	Max. Ambient Temp.	T Code	Insulation Class	TPL
Standard Ambient Version	1.4 W	140˚F (60˚C)	T6	F	-
High Ambient Version	1.8 W	179˚F (80˚C)	T5	F	#23033
Surge Suppression Version	1.7 W	140˚F (60˚C)	T5	F	-
Surge Suppression High Ambient Version	2.0 W	179˚F (80˚C)	T5	F	#23033

① **IMPORTANT:** Supervisory and leakage current above the drop out current listed will cause improper operation. ***Consult your local ASCO sales office for additional assistance.***

Description	Wattage	Voltage (DC)	Min. Pull In (mA)	3-Way Drop Out (mA) ①	2-Way Drop Out (mA) ①	Coil resistance @ 68˚F (20˚C) (ohms)
Standard Ambient Version	1.4 W	12V	83.5	13.9	3.2	102
		24V	42.0	7.0	1.6	410
		48V	21.4	3.6	0.8	1640
		120V	8.7	1.4	0.3	10000
High Ambient Version	1.8 W	12V	94.3	15.7	3.6	80
		24V	47.9	8.0	1.8	320
		48V	24.0	4.0	0.9	1260
Surge Suppersion Version	1.7 W	12V	94.3	15.7	3.6	80
		24V	47.9	8.0	1.8	320
		48V	22.7	3.8	0.9	1470
Surge Suppession High Ambient Version	2.0 W	12V	105.3	17.6	4.0	64
		24V	54.1	9.0	2.1	270
		48V	24.0	4.0	0.9	1260

24VDC Spare Coil P/N	Standard Ambient Temp. Version	High Ambient Temp Version
General Purpose	238710-902-D*	238710-908-D*
Explosion Proof	238714-902-D*	238714-905-D*
Explosion Proof, Corrosion Resistant	274714-902-D*	274714-905-D*
Explosion Proof, Surge Suppression	276006-006-D*	276006-106-D*
Explosion Proof, Corrosion Resistant, Surge Suppression	276007-006-D*	276007-106-D*

Ordering

Normal Ambient Version
EV8551G322 24VDC

High Ambient Version (always add TPL #23033)
EF**X**8316G301-23033 24VDC

Solenoid Enclosures

Standard: Watertight, Types 1, 2, 3, 3S, 4, and 4X.
Optional: Explosionproof and Watertight, Types 3, 3S, 4, 4X, 6, 6P, 7, and 9.
(To order, add prefix "EF" to catalog number. For explosionproof with 316 Stainless Steel hub and trim, specify prefix "EV".) Surge suppression coils also available "MF" prefix.
See Optional Features Section for other available options.

Approvals

UL listed General Purpose Valves (Hazardous Location Classified). EV8345G381 solenoid only UL listed. CSA certified; nonincendive for Class I, Division 2 UL E25549. Meets applicable CE directives.

SIL 3 capable per IEC 61508 on 8314 and 8316 const. Third party certification provided by EXIDA.
Refer to Engineering Section for details.

Nominal Ambient Temp. Ranges

Series	Body Material	Normal Temperature Range	High Ambient Temp Version
8553	Stainless Steel	-40°F to 140°F (-40°C to 60°C)	Not Available
8551	Brass		
8553	Aluminum	-13°F to 140°F (-25°C to 60°C)	
8551		5°F to 140°F (-15°C to 60°C)	
8551	Stainless Steel	-4°F to 140°F (-20°C to 60°C)	Low Limit is the same as Normal Temperature Ratings, but High Limit is 176°F (80°C)
8262	Brass / Stainless Steel	-40°F to 140°F (-40°C to 60°C)	
8314			
8317			
8316*		-20°F to 140°F (-29°C to 60°C)	
8316 (Suffix V)		32°F to 140°F (0°C to 60°C)	
8223		-4°F to 140°F (-20°C to 60°C)	
8344	Brass only		
8316G334			

*Does not include 8316G334; Includes 8316H374. **Note**: 8553 not available in brass

Important

These solenoid valves are intended for use on clean dry air or inert gas, filtered to 40 micrometres or better. The dew point of the media should be at least 10°C (18° F) below the minimum temperature to which any portion of the clean air/inert gas system could be exposed to prevent freezing. If lubricated air is used, the lubricants must be compatible with Nitrile elastomers. Diester oils may cause operational problems. Instrument air in compliance with ANSI/ISA Standard 7.0.01-1996 exceeds the above requirements and is, therefore, an acceptable media for these valves.

Specifications (English units)

Pipe Size (in)	Orifice Size (in)	Cv Flow Factor		Operating Pressure Differential (psi) Air-Inert Gas		Max. Fluid and Ambient Temp. °F	Brass Body		Stainless Steel Body	
		Pressure to Cylinder	Cylinder to Exhaust	Min.	Max.		Catalog Number	Const. Ref.	Catalog Number	Const. Ref.
2/2 VALVES, NORMALLY CLOSED, with NBR Disc										
1/4	1/16	.08		0	150	140	8262G320	18	8262G386 ⑥	18
3/8	5/16	1.5		10	150	140	8223G323	19	-	-
1/2	3/8	3.2		25	150	140	8223G303	20	8223G310 ⑥	20
3/2 VALVES, UNIVERSAL OPERATION (Normally Closed or Normally Open) with NBR Disc – SIL 3 Capable, Certified by Exida ⑦ ⑧										
1/4	1/16	.08	.08	0	150	140	8314G300	1	8314G301 ⑥	2
3/2 VALVES, NORMALLY CLOSED (Closed when de-energized) with NBR Disc or FPM, as Listed – SIL 3 Capable, Certified by Exida ⑦										
1/4	5/16	1.5	1.5	⑤	150	140	8316G301 ③	3	EV8316G381V ④⑥	3
3/8	5/16	1.8	1.8	⑤	150	140	8316G302 ③	3	EV8316G382V ④⑥	3
3/8	5/8	4	4	⑤	150	140	8316G303 ③	3A	-	-
1/2	5/8	4	4	⑤	150	140	8316G304 ③	3A	EV8316G384V ④⑥	3A
3/4	11/16	5.5	5.5	10	150	140	8316H374 ③	4	-	-
1	1	13	13	10	150	140	8316G334 ③	5	-	-
3/2 VALVES, UNIVERSAL (Normally Closed or Normally Open) "Quick Exhaust" with CR Diaphragm and NBR Disc										
1/4	②	.08	.73	5	150	140	8317G307 ①	6	8317G308 ①⑥	7
4/2 VALVES, with NBR Disc and Seals										
1/4	1/16	.08	.08	10	150	140	8345G301 ①③	6	EV8345G381 ①③⑥	8

Pipe Size (in)	Orifice Size (in)	Cv Flow Factor		Operating Pressure Differential (psi) Air-Inert Gas		Max. Fluid and Ambient Temp. °F	Single Solenoid		Dual Solenoid	
		Pressure to Cylinder	Cylinder to Exhaust	Min.	Max.		Catalog Number	Const. Ref.	Catalog Number	Const. Ref.
4/2 VALVES, Brass Body with NBR Disc										
1/4	1/4	.80	1	10	150	140	8344G370 ①③	9	8344G344 ③	12
3/8	3/8	1.4	2.2	10	150	140	8344G372 ①③	11	8344G380 ③	10
1/2	3/8	1.4	2.2	10	150	140	8344G374 ①③	11	8344G382 ③	10
3/4	3/4	5.2	5.6	10	150	140	8344G376 ①③	13	8344G354 ③	14
1	3/4	5.2	5.6	10	150	140	8344G378 ①③	13	8344G356 ③	14

Note: Pilot core discs are low-temperature NBR. Adding Suffix V (FKM) does NOT change the pilot core discs material. Suffix V (FKM) is not available on Series 8551 and 8553.

① There are two exhaust flows in the exhaust mode (pilot and main). The pilot exhaust must be connected to the main exhaust when the air or inert gas cannot be exhausted to atmosphere.

② For "Quick Exhaust" valves, pressure port is 1/16", exhaust port is 1/4".

③ **IMPORTANT:** A Minimum Operating Pressure Differential must be maintained between the pressure and exhaust ports. Supply and exhaust piping must be full area, unrestricted. ASCO flow controls and other similar components must be installed in the cylinder lines only.

④ Diaphragm and main disc FKM only (pilot is low-temperature NBR); Ambient temperature range is 32°F to 149°F.

⑤ Zero minimum when valve selection gasket is in external position and proper auxiliary air pressure is applied. Minimum 15 psi Operating Pressure Differential when selection gasket is in the internal position.

⑥ Can be used for ***dry*** natural gas service with the EF or EV prefix.

⑦ Safety manual and FMEDA (Failure Modes Effects and Diagnostic Analysis) report available.

⑧ SIL 3 Capable, Certified by Exida, only valid when used as Normally Closed.

Specifications (English units)

Body Material	Pipe Size (in)	Orifice Size (in)	Cv Flow Factor	Single Solenoid					Dual Solenoid				
				Operating Pressure Differential (psi) Air-Inert Gas		Max. Fluid Temp. ˚F	Catalog Number	Const. Ref.	Operating Pressure Differential (psi) Air-Inert Gas		Max. Fluid Temp. ˚F	Catalog Number	Const. Ref.
				Min.	Max.				Min.	Max.			
3/2, 5/2, 5/3 VALVES, with NBR and PUR Seals													
Aluminum 3/2	1/4	1/4	.86	30	150	140	8551G305 ⑦	21	30	150	140	8551G306 ⑦	21
Aluminum 5/2							8551G317 ⑦	22				8551G318 ⑦	22
Aluminum 5/3 Center Closed							-	22				8551G367 ⑦	22
Aluminum 5/3 Center Open							-	22				8551G368 ⑦	22
Brass 3/2							EF8551G307 ②⑦	21				EF8551G308 ②⑦	21
Brass 5/2							EF8551G319 ②⑦	22				EF8551G320 ②⑦	22
316L Stainless Steel 3/2							EV8551G313 ③⑥⑦	21				EV8551G314 ③⑥⑦	21
316L Stainless Steel 5/2							EV8551G321 ③⑥	22				EV8551G322 ③⑥	22
Aluminum 3/2	1/2	1/2	3.7				8553G305 ⑦	21				8553G306 ⑦	21
Aluminum 5/2							8553G317 ⑦	22				8553G318 ⑦	22
316L Stainless Steel 3/2							EV8553G313 ③⑥⑦	21				EV8553G314 ③⑥⑦	21
316L Stainless Steel 5/2							EV8553G321 ③⑥⑦	22				EV8553G322 ③⑥⑦	22

② Brass construction supplied standard with EF solenoid. ③ Stainless steel construction supplied standard with EV solenoid.
⑥ Can be used for ***dry*** natural gas service with the EF or EV prefix. ⑦ Solenoid only approvals with EF of EV prefix, no approvals with general purpose coil (no prefix).

Body Material	Pipe Size (in)	Orifice Size (in)	Cv Flow Factor	Single Solenoid					Dual Solenoid				
				Operating Pressure Differential (psi) Air-Inert Gas		Max. Fluid Temp. ˚F	Catalog Number	Const. Ref.	Operating Pressure Differential (psi) Air-Inert Gas		Max. Fluid Temp. ˚F	Catalog Number	Const. Ref.
				Min.	Max.				Min.	Max.			
3/2, 5/2, 5/3 VALVES, with NBR and PUR Seals, NAMUR Mount													
Aluminum 3/2, 5/2	1/4	1/4	.86	30	150	140	8551G301 ①	23	30	150	140	8551G302 ①	23
Aluminum 5/3 Center Closed							-	-				8551G365 ⑦	24
Aluminum 5/3 Center Open							-	-				8551G366 ⑦	24
Brass 3/2, 5/2							EF8551G303 ②①⑦	23				EF8551G304 ②①⑦	23
316L Stainless Steel 3/2, 5/2							EV8551G309 ③⑥	24				EV8551G310 ③⑥	24
Aluminum 3/2, 5/2	1/2	1/2	3.7				8553G301 ⑦	24				8553G302 ⑦	24
316L Stainless Steel 3/2, 5/2							EV8553G309 ③⑥⑦	24				EV8553G310 ③⑥⑦	24

① 1/8" NPT exhaust for 1/4" aluminum and brass. ② Brass construction supplied standard with EF solenoid. ③ Stainless steel construction supplied standard with EV solenoid.
⑥ Can be used for ***dry*** natural gas service with the EF or EV prefix. ⑦ Solenoid only approvals with EF of EV prefix, no approvals with general purpose coil (no prefix).

Specifications (Metric units)

Pipe Size (in)	Orifice Size (mm)	Kv Flow Factor (m3/h)		Operating Pressure Differential (bar) Air-Inert Gas		Max. Fluid and Ambient Temp. °C	Brass Body		Stainless Steel Body	
		Pressure to Cylinder	Cylinder to Exhaust	Min.	Max.		Catalog Number	Const. Ref.	Catalog Number	Const. Ref.
2/2 VALVES, NORMALLY CLOSED, with NBR Disc										
1/4	2	.07		0	10	60	8262G320	18	8262G386 ⑥	18
3/8	8	1.29		0.7	10	60	8223G323	19	-	-
1/2	10	2.74		1.7	10	60	8223G303	20	8223G310 ⑥	20
3/2 VALVES, UNIVERSAL OPERATION (Normally Closed or Normally Open) with NBR Disc – SIL 3 Capable, Certified by Exida ⑦ ⑧										
1/4	2	.07	.07	0	10	60	8314G300	1	8314G301 ⑥	2
3/2 VALVES, NORMALLY CLOSED (Closed when de-energized) with NBR Disc or FPM, as Listed – SIL 3 Capable, Certified by Exida ⑦										
1/4	8	1.29	1.29	⑤	10	60	8316G301 ③	3	EV8316G381V ④⑥	3
3/8	8	1.37	1.37	⑤	10	60	8316G302 ③	3	EV8316G382V ④⑥	3
3/8	16	2.57	2.57	⑤	10	60	8316G303 ③	3A	-	-
1/2	16	3.43	3.43	⑤	10	60	8316G304 ③	3A	EV8316G384V ④⑥	3A
3/4	17	4.71	4.71	0.7	10	60	8316H374 ③	4	-	-
1	25	11.14	11.14	0.7	10	60	8316G334 ③	5	-	-
3/2 VALVES, UNIVERSAL (Normally Closed or Normally Open) "Quick Exhaust" with CR Diaphragm and NBR Disc										
1/4	②	.07	.63	0.3	10	60	8317G307 ①	6	8317G308 ①⑥	7
4/2 VALVES, with NBR Disc and Seals										
1/4	2	.07	.07	0.7	10	60	8345G301 ①③	6	EV8345G381 ①③⑥	8
4/2 VALVES, Brass Body with NBR Disc										
Pipe Size (in)	Orifice Size (mm)	Kv Flow Factor (m3/h)		Operating Pressure Differential (bar) Air-Inert Gas		Max. Fluid and Ambient Temp. °C	Single Solenoid		Dual Solenoid	
		Pressure to Cylinder	Cylinder to Exhaust	Min.	Max.		Catalog Number	Const. Ref.	Catalog Number	Const. Ref.
1/4	6	0.69	0.86	0.7	10	60	8344G370 ①③	9	8344G344 ③	12
3/8	10	1.20	1.89	0.7	10	60	8344G372 ①③	11	8344G380 ③	10
1/2	10	1.20	1.89	0.7	10	60	8344G374 ①③	11	8344G382 ③	10
3/4	19	4.46	4.80	0.7	10	60	8344G376 ①③	13	8344G354 ③	14
1	19	4.46	4.80	0.7	10	60	8344G378 ①③	13	8344G356 ③	14

Note: Pilot core discs are low-temperature NBR. Adding Suffix V (FKM) does NOT change the pilot core discs material. Suffix V (FKM) is not available on Series 8551 and 8553.

① There are two exhaust flows in the exhaust mode (pilot and main). The pilot exhaust must be connected to the main exhaust when the air or inert gas cannot be exhausted to atmosphere.

② For "Quick Exhaust" valves, pressure port is 1/16", exhaust port is 1/4".

③ **IMPORTANT:** A Minimum Operating Pressure Differential must be maintained between the pressure and exhaust ports. Supply and exhaust piping must be full area, unrestricted. ASCO flow controls and other similar components must be installed in the cylinder lines only.

④ Diaphragm and main disc FKM only (pilot is low-temperature NBR); Ambient temperature range is 0°C to 149°F 65°C.

⑤ Zero minimum when valve selection gasket is in external position and proper auxiliary air pressure is applied. Minimum 1.0 bar Operating Pressure Differential when selection gasket is in the internal position.

⑥ Can be used for ***dry*** natural gas service with the EF or EV prefix.

⑦ Safety manual and FMEDA (Failure Modes Effects and Diagnostic Analysis) report available.

⑧ SIL 3 Capable, Certified by Exida, only valid when used as Normally Closed.

Specifications (Metric units)

Body Material	Pipe Size (in)	Orifice Size (mm)	Kv Flow Factor (m3/h)	Single Solenoid					Dual Solenoid				
				Operating Pressure Differential (bar) Air-Inert Gas		Max. Fluid Temp.˚C	Catalog Number	Const. Ref.	Operating Pressure Differential (bar) Air-Inert Gas		Max. Fluid Temp.˚C	Catalog Number	Const. Ref.
				Min.	Max.				Min.	Max.			
3/2, 5/2, 5/3 VALVES, with NBR and PUR Seals													
Aluminum 3/2	1/4	6	.7	2	10	60	8551G305 ⑦	21	2	10	60	8551G306 ⑦	21
Aluminum 5/2							8551G317 ⑦	22				8551G318 ⑦	22
Aluminum 5/3 Center Closed							-	22				8551G367 ⑦	22
Aluminum 5/3 Center Open							-	22				8551G368 ⑦	22
Brass 3/2							EF8551G307 ②⑦	21				EF8551G308 ②⑦	21
Brass 5/2							EF8551G319 ②⑦	22				EF8551G320 ②⑦	22
316L Stainless Steel 3/2							EV8551G313 ③⑥⑦	21				EV8551G314 ③⑥⑦	21
316L Stainless Steel 5/2							EV8551G321 ③⑥	22				EV8551G322 ③⑥	22
Aluminum 3/2	1/2	13	3.15				8553G305 ⑦	21				8553G306 ⑦	21
Aluminum 5/2							8553G317 ⑦	22				8553G318 ⑦	22
316L Stainless Steel 3/2							EV8553G313 ③⑥⑦	21				EV8553G314 ③⑥⑦	21
316L Stainless Steel 5/2							EV8553G321 ③⑥⑦	22				EV8553G322 ③⑥⑦	22

② Brass construction supplied standard with EF solenoid. ③ Stainless steel construction supplied standard with EV solenoid.
⑥ Can be used for ***dry*** natural gas service with the EF or EV prefix. ⑦ Solenoid only approvals with EF of EV prefix, no approvals with general purpose coil (no prefix).

Body Material	Pipe Size (in)	Orifice Size (mm)	Kv Flow Factor (m3/h)	Single Solenoid					Dual Solenoid				
				Operating Pressure Differential (bar) Air-Inert Gas		Max. Fluid Temp.˚C	Catalog Number	Const. Ref.	Operating Pressure Differential (bar) Air-Inert Gas		Max. Fluid Temp.˚C	Catalog Number	Const. Ref.
				Min.	Max.				Min.	Max.			
3/2, 5/2, 5/3 VALVES, with NBR and PUR Seals, NAMUR Mount													
Aluminum 3/2, 5/2	1/4 ①	6	.7	2	10	60	8551G301 ①	23	2	10	60	8551G302 ①	23
Aluminum 5/3 Center Closed							-	-				8551G365 ⑦	24
Aluminum 5/3 Center Open							-	-				8551G366 ⑦	24
Brass 3/2, 5/2							EF8551G303 ②①⑦	23				EF8551G304 ②①⑦	23
316L Stainless Steel 3/2, 5/2							EV8551G309 ③⑥	24				EV8551G310 ③⑥	24
Aluminum 3/2, 5/2	1/2	13	3.15				8553G301 ⑦	24				8553G302 ⑦	24
316L Stainless Steel 3/2, 5/2							EV8553G309 ③⑥⑦	24				EV8553G310 ③⑥⑦	24

① 1/8" NPT exhaust for 1/4" aluminum and brass. ② Brass construction supplied standard with EF solenoid. ③ Stainless steel construction supplied standard with EV solenoid.
⑥ Can be used for ***dry*** natural gas service with the EF or EV prefix. ⑦ Solenoid only approvals with EF of EV prefix, no approvals with general purpose coil (no prefix).

Dimensions: inches (mm)

Const. Ref. 1, 2

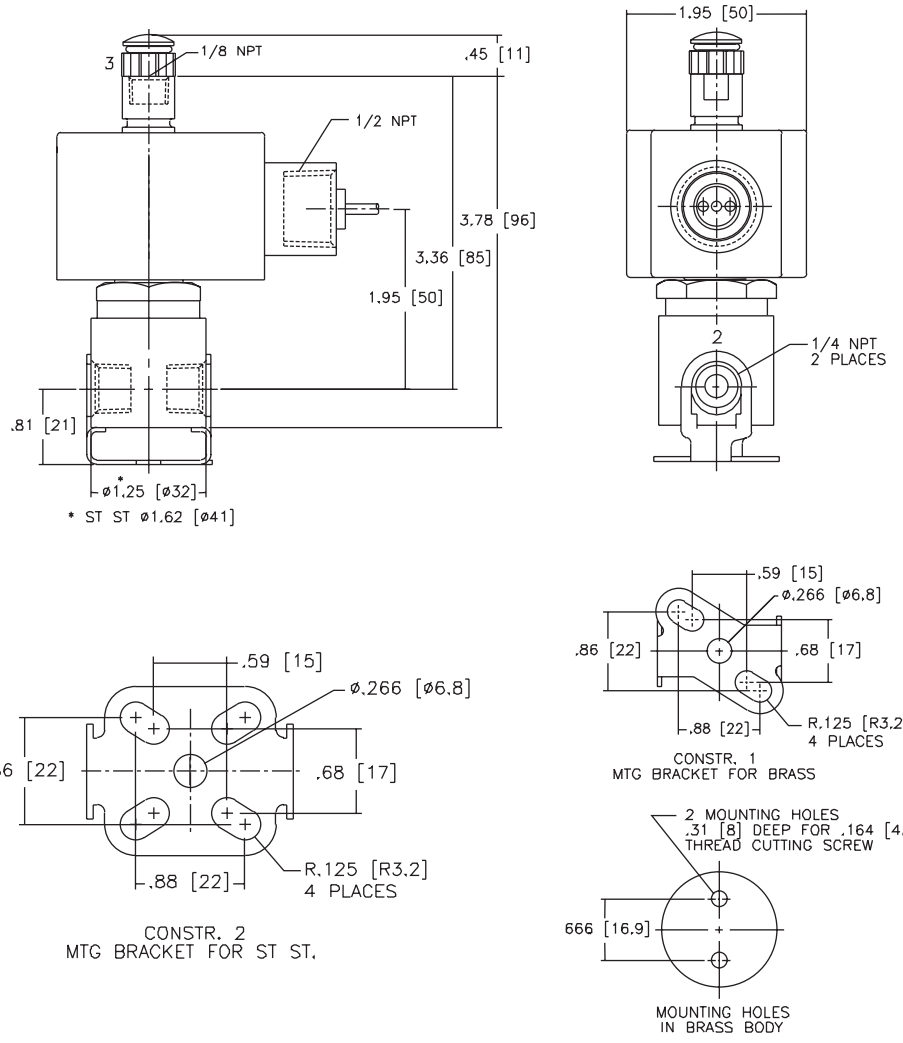

Dimensions: inches (mm)

Const. Ref. 3

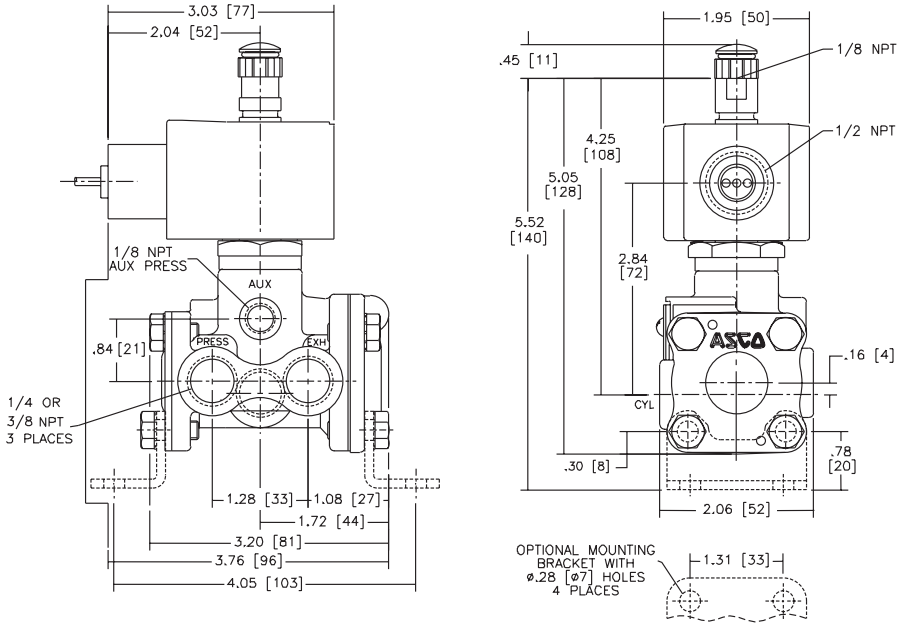

Const. Ref. 3A

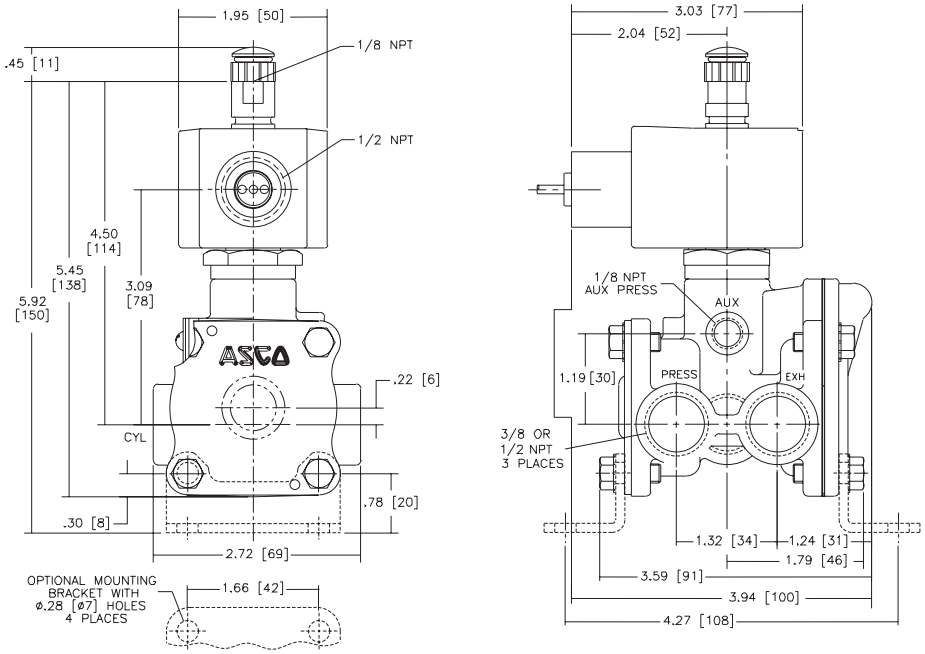

Dimensions: inches (mm)

Const. Ref.		A	B	C	H	K	L	M	N	P	R	W
4	in	1.61	1.41	1.66	6.78	3.68	3.38	2.16	.53	5.09	.50	3.31
	mm	41	36	42	172	93	86	55	13	129	13	84
5	in	X	1.78	X	7.40	3.93	4.44	2.81	.87	5.34	1.74	5.31
	mm	X	45	X	188	100	113	71	22	136	44	135

Const. Ref. 4, 5

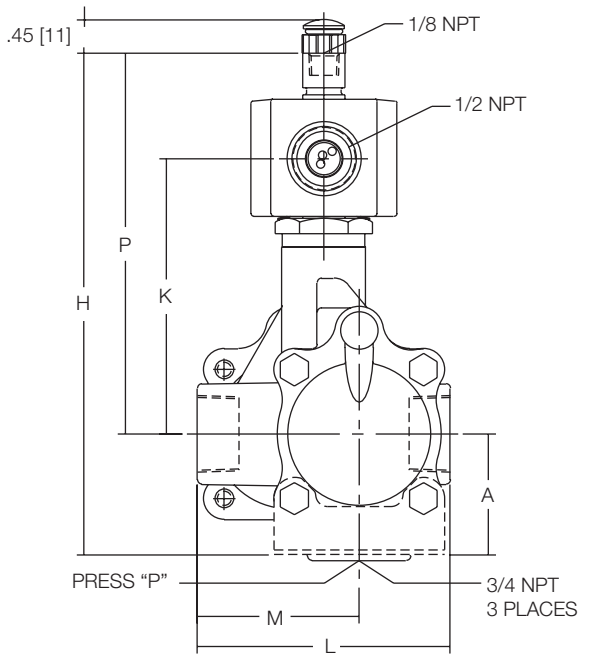

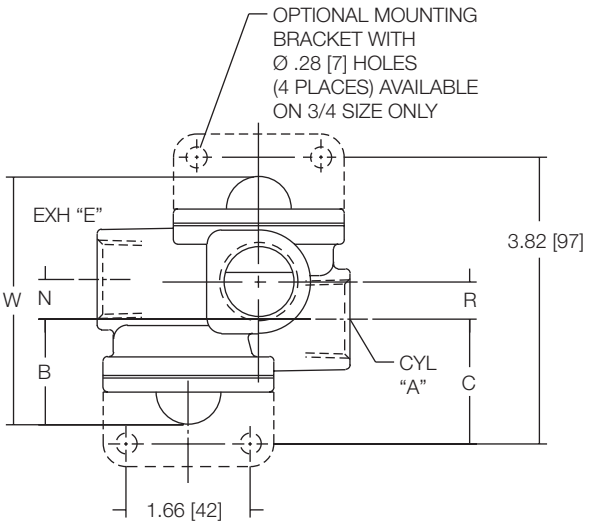

Const. Ref. 6. 7

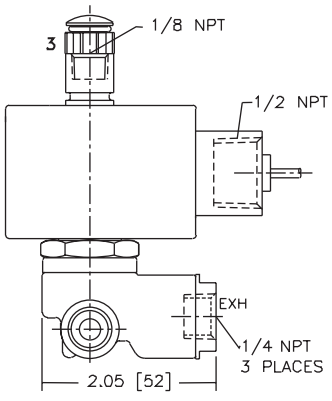

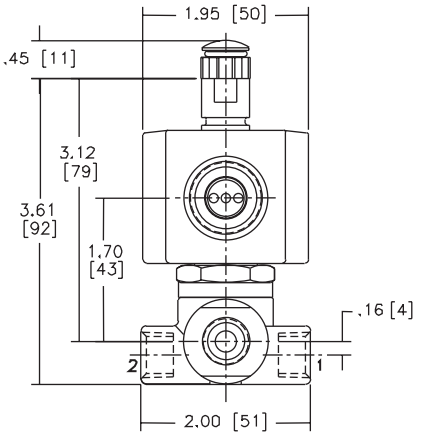

Dimensions: inches (mm)

Const. Ref. 8

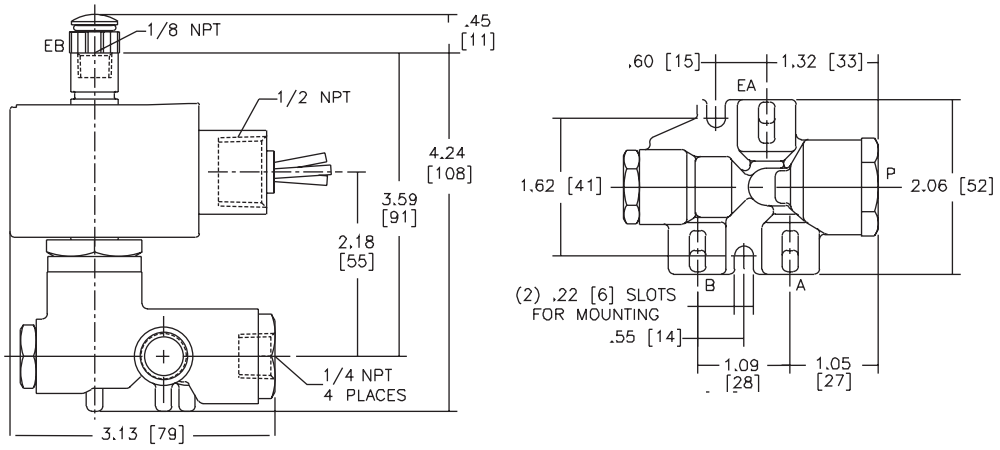

Const. Ref. 18

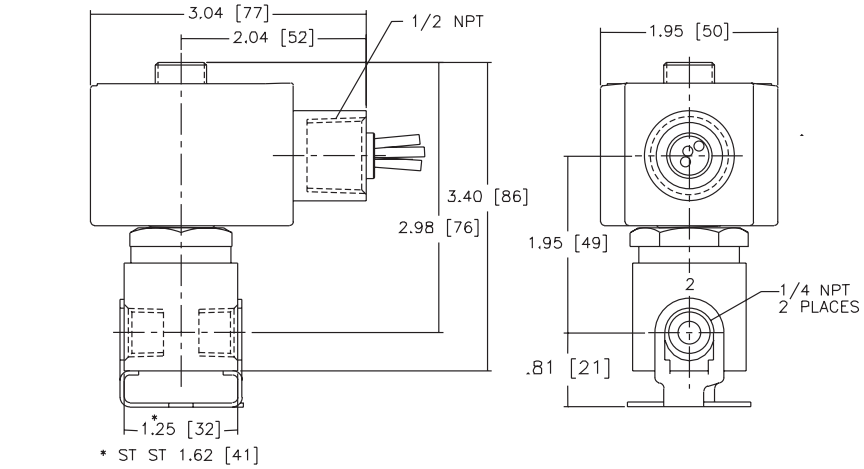

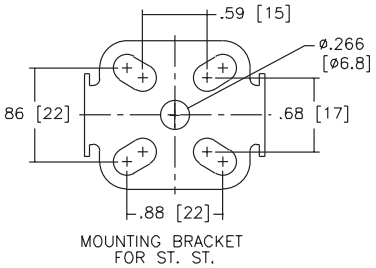

Dimensions: inches (mm)

Const. Ref.		Dia "D"	E	F	G	H	J	K	L	N	P	W	X	Y	Z	Exhaust Pipe Size
9	in	Ø .28	.56	2.41	1.88	4.67	1.03	2.30	3.12	.72	3.72	4.75	1.41	1.56	.81	3/8
	mm	7	14	61	48	119	26	58	79	18	95	121	36	40	21	
10	in	Ø .34	.76	3.12	2.62	4.89	1.50	2.11	3.18	.83	3.77	6.06	1.86	1.89	.83	1/2
	mm	9	16	79	67	118	38	70	81	21	90	154	48	49	21	
11	in	Ø .34	.76	3.12	2.62	4.65	1.50	2.11	3.18	.83	3.53	6.06	1.86	1.89	.83	1/2
	mm	9	35	97	99	138	53	54	116	40	99	210	54	67	30	
12	in	Ø .28	.56	2.41	1.88	5.06	1.03	2.71	3.12	.72	4.12	4.81	1.41	1.56	.81	3/8
	mm	7	14	61	48	129	26	69	79	18	105	122	36	40	21	
13	in	Ø .34	.78	3.12	2.62	5.27	1.50	2.49	3.19	.84	4.16	6.06	1.88	1.91	.84	1
	mm	9	16	79	67	134	38	63	81	21	106	154	48	49	21	
14	in	Ø .34	1.38	3.81	3.88	6.09	2.09	3.18	4.56	1.56	4.59	8.25	2.12	2.62	1.16	1
	mm	9	35	97	99	155	53	81	116	40	117	210	54	67	30	

Const. Ref. 9, 10, 11, 12, 13, 14

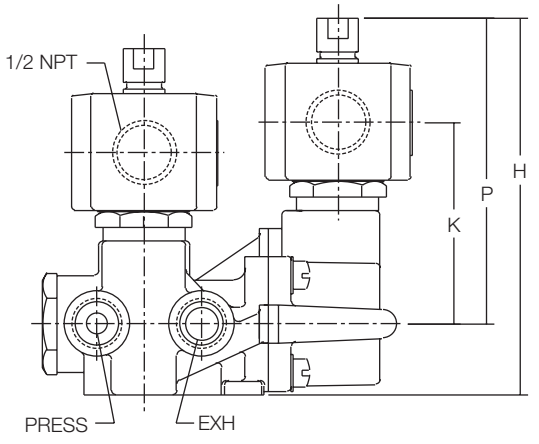

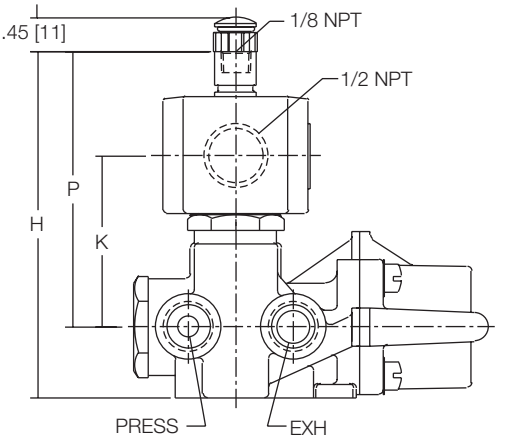

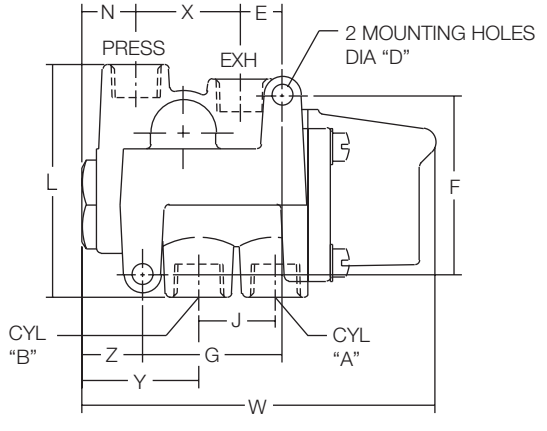

BOTTOM VIEW OF VALVE

Dimensions: inches (mm)

Const. Ref. 19

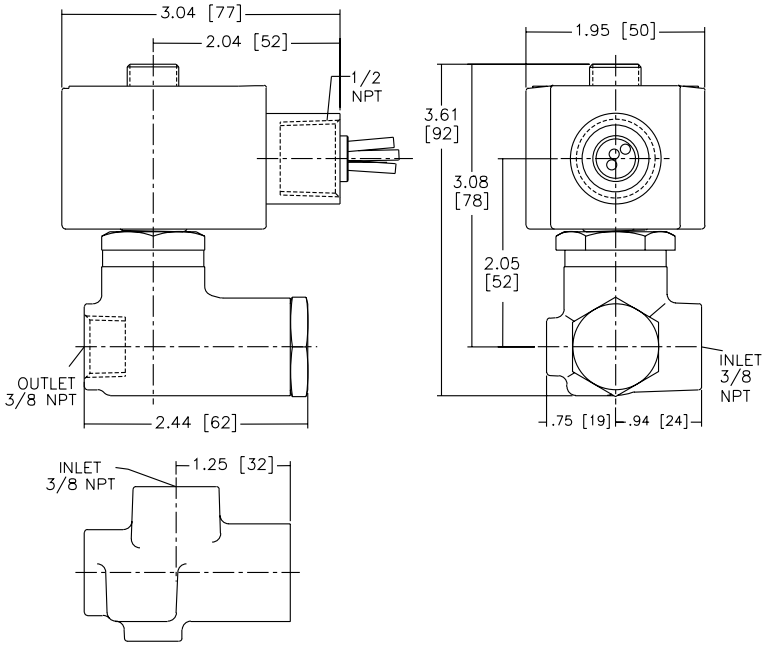

Const. Ref. 20

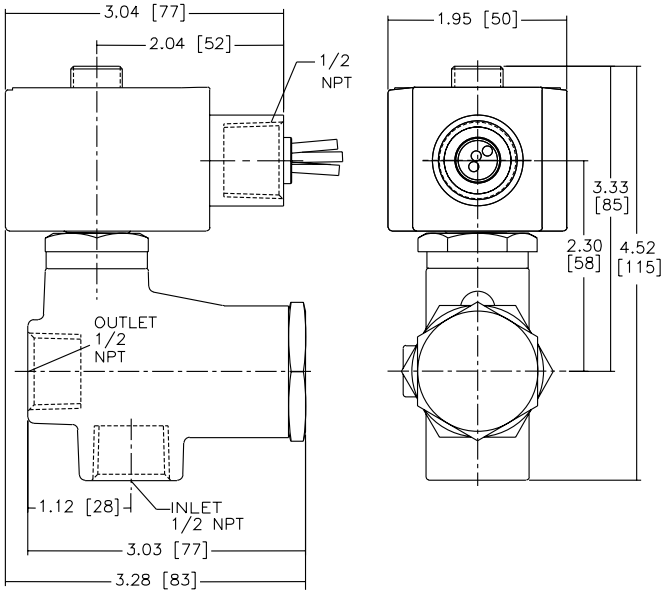

Dimensions: inches (mm)

Series	8551	8553
NPT	1/4	1/2
L1 ①	5.12 (132)	6.00 (153)
L2 ①	6.73 (171)	7.80 (198)
H2	4.38 (111)	4.77 (121)
H1	1.10 (28)	1.58 (40)
W	1.77 (45)	2.85 (72)

① Manual override option MH adds .250" (6.4), MS option adds .468" (11.9) to each solenoid endcap.

Optional Manual Operators		
Add Suffix		Description
MO		Push and turn to lock with flat head screwdriver slot
MI		Momentary push in with flat head screwdriver slot
MH		Momentary push in by hand
MS	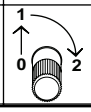	Push and turn to lock by hand

Const. Ref. 21

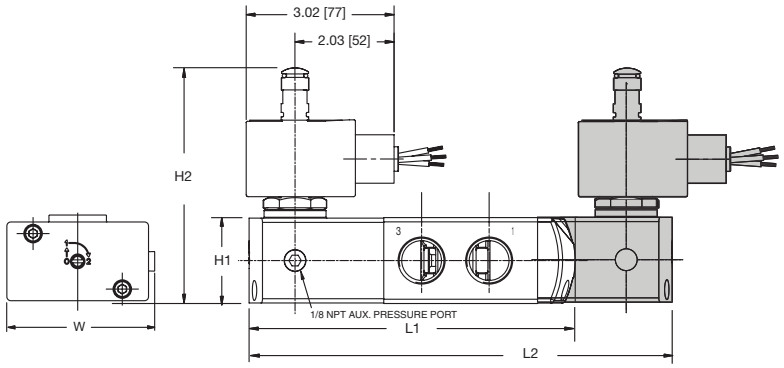

Series	8551	8553
NPT	1/4	1/2
L1 ①	5.63 (144)	7.06 (180)
L2 ①	7.20 (183)	8.86 (225)
H2	4.38 (111)	4.77 (121)
H1	1.10 (28)	1.58 (40)
W	1.77 (45)	2.85 (72)

① Manual override option MH adds .250" (6.4), MS option adds .468" (11.9) to each solenoid endcap.

Optional Manual Operators		
Add Suffix		Description
MO		Push and turn to lock with flat head screwdriver slot
MI		Momentary push in with flat head screwdriver slot
MH	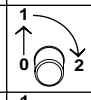	Momentary push in by hand
MS	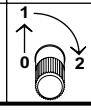	Push and turn to lock by hand

Const. Ref. 22

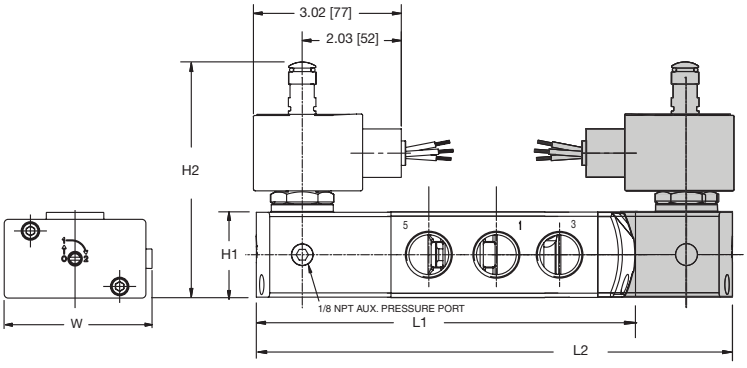

SPECIAL SERVICE PILOT

Dimensions: inches (mm)

Series	8551 (Aluminum, Brass)
NPT	1/4
L1 ①	4.96 (126)
L2 ①	6.49 (165)
H2	4.38 (111)
H1	1.57 (40)
W	1.77 (45)

① Manual override option MH adds .250" (6.4), MS option adds .468" (11.9) to each solenoid endcap.

Optional Manual Operators		
Add Suffix		Description
MO		Push and turn to lock with flat head screwdriver slot
MI		Momentary push in with flat head screwdriver slot
MH		Momentary push in by hand
MS	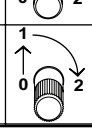	Push and turn to lock by hand

Const. Ref. 23

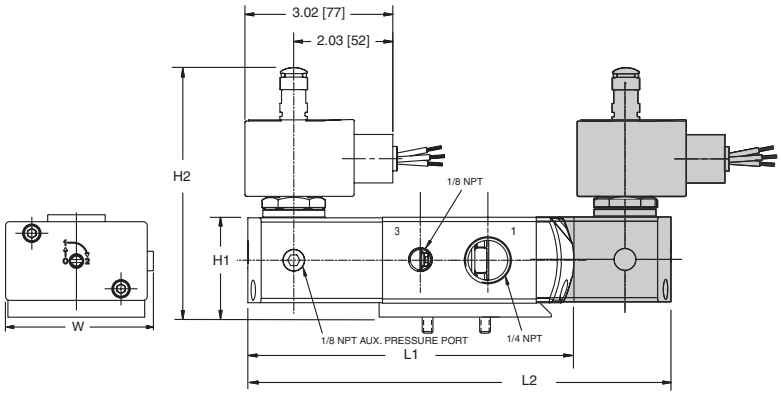

8551 NAMUR Footprint

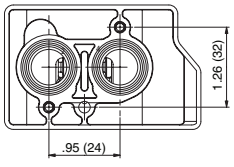

Series	8551 (316L SS)	8551 (5/3)	8553
NPT	1/4	1/4	1/2
L1 ①	5.20 (132)	-	7.08 (180)
L2 ①	6.73 (171)	7.44 (189)	8.85 (225)
H2	4.38 (111)	4.38 (111)	4.77 (121)
H1	1.57 (40)	1.57 (40)	2.08 (53)
W	1.77 (45)	1.77 (45)	2.87 (73)

① Manual override option MH adds .250" (6.4), MS option adds .468" (11.9) to each solenoid endcap.

Optional Manual Operators		
Add Suffix		Description
MO		Push and turn to lock with flat head screwdriver slot
MI		Momentary push in with flat head screwdriver slot
MH		Momentary push in by hand
MS	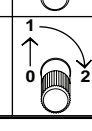	Push and turn to lock by hand

Const. Ref. 24

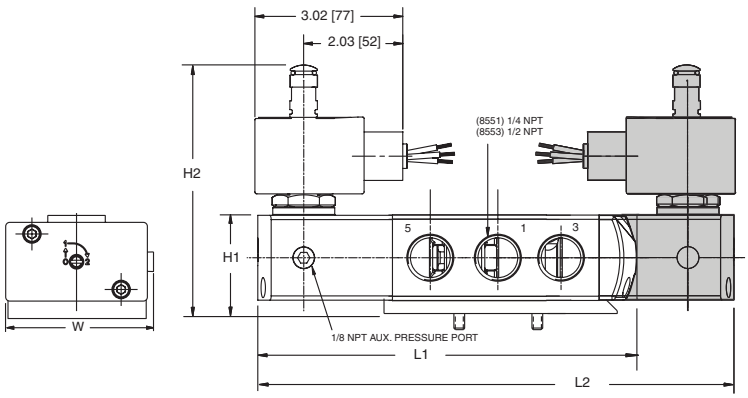

8553 NAMUR Footprint

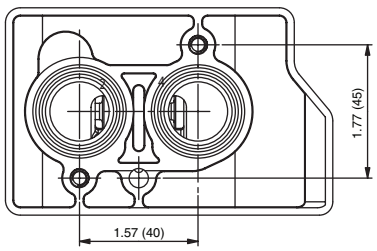

8551 NAMUR Footprint

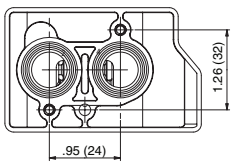

SPECIAL SERVICE PILOT

Installation & Maintenance Instructions

3-WAY DIRECT-ACTING SOLENOID VALVES
UNIVERSAL OPERATION - 1/4" NPT - 1/16" ORIFICE
BRASS OR STAINLESS STEEL CONSTRUCTION
AIR OR INERT GAS SERVICE

SERIES 8314

IMPORTANT: See separate solenoid installation and maintenance instructions for information on: Wiring, Solenoid Temperature, Causes of Improper Operation, Coil or Solenoid Replacement.

DESCRIPTION

Series 8314 valves are 3-way direct-acting solenoid valves designed for air or inert gas service. Valve bodies are made of rugged brass or stainless steel. The valves may be provided with a low power or intrinsically safe solenoid.

OPERATION

Universal (For 3-Way Normally Closed or Normally Open Operation)

Solenoid De-energized

- Normally Closed, Pressure at Port 2 - Port 2 is closed, Flow is from Port 1(I) to Port 3.
- Normally Open, Pressure at Port 3 - Flow is from Port 3 to Port 1(I), Port 2 is closed.

Solenoid Energized

- Normally Closed, Pressure at Port 2 - Flow is from Port 2 to Port 1 (I), Port 3 is closed.
- Normally Open, Pressure at Port 3 - Flow is from Port 1(I) to Port 2, Port 3 is closed.

Flow Diagrams

	De-energized	Energized
Normally Closed	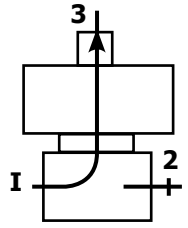	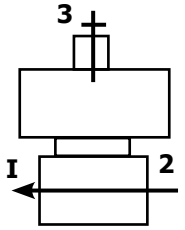
Normally Open	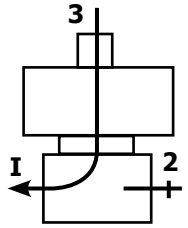	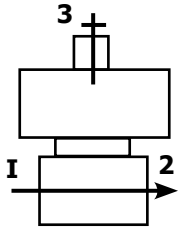

INSTALLATION

Check nameplate for correct catalog number,pressure, voltage, frequency, and service. Never apply incompatible fluids or exceed pressure rating of the valve. Installation and valve maintenance to be performed by qualified personnel.

Temperature Limitations

Fluid and Ambient temperature range: -40°F to +140°F

Future Service Considerations

Provision should be made for performing seat leakage, external leakage, and operational tests on the valve with a nonhazardous, noncombustible fluid after disassembly and reassembly.

Positioning

This valve is designed to perform properly when mounted in any position. However, for optimum life and performance, the solenoid should be mounted vertically and upright to reduce the possibility of foreign matter accumulating in the solenoid base sub-assembly area.

Mounting

Refer to Figure 1 for mounting brass valve with mounting bracket or directly to valve body. Refer to Figure 2 for mounting stainless steel valve with mounting bracket.

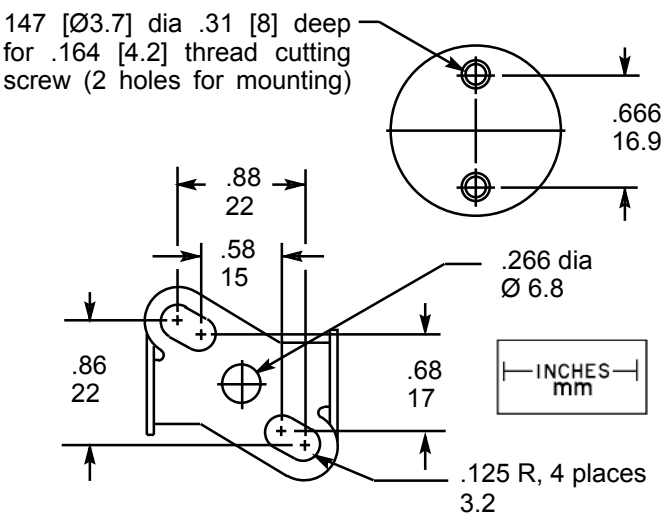

Figure 1. Dimensions for direct mounting to valve body or mounting bracket for brass valve construction.

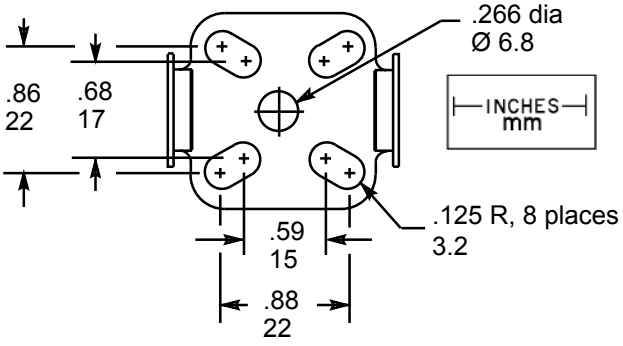

Figure 2. Mounting bracket dimensions for stainless steel valve.

 All Rights Reserved.

Piping

Connect piping or tubing to valve according to markings on valve body. Refer to flow diagrams provided in OPERATION section of basic valve installation and maintenance instructions.

⚠ CAUTION: To avoid damage or accidental disengagement of cartridge assembly from valve body, hold cartridge assembly securely by wrenching flats when installing or removing piping at Port 3.

Apply pipe compound sparingly to male pipe threads only. If applied to valve threads,the compound may enter the valve and cause operational difficulty. Avoid pipe strain by properly supporting and aligning piping. When tightening the pipe, do not use valve or solenoid as a lever. Locate wrenches applied to valve body or piping as close as possible to connection point.

IMPORTANT: These solenoid valves are intended for use on clean dry air or inert gas, filtered to 40 micrometres or better. The dew point of the media should be at least 10°C(18° F)below the minimum temperature to which any portion of the clean air/inert gas system could be exposed to prevent freezing. If lubricated air is used, the lubricants must be compatible with Nitrile elastomers. Diester oils may cause operational problems. Instrument air in compliance with ANSI/ISA Standard 7.0.01-1996 exceeds the above requirements and is, therefore, an acceptable media for these valves.

MAINTENANCE

⚠ WARNING: To prevent the possibility of death, personal injury or property damage, turn off electrical power, depressurize valve, and vent fluid to a safe area before servicing the valve.

NOTE: It is not necessary to remove the valve body from the pipeline for repairs. However, piping or tubing must be removed from Port 3 connection.

Cleaning

All manual reset solenoid valves should be cleaned periodically. The time between cleanings will vary depending on the medium and service conditions. In general, if the voltage to the coil is correct, sluggish valve operation, excessive noise, or leakage will indicate that cleaning is required. In the extreme case, faulty valve operation will occur and the valve may fail to shift. Clean strainer or filter when cleaning the valve.

Preventive Maintenance

- Keep the medium flowing through the valve as free from dirt and foreign material as possible.
- Periodic exercise of the valve should be considered if ambient or fluid conditions are such that corrosion, elastomer degradation, fluid contamination build up or other conditions that could impede solenoid valve shifting are possible. In many cases, solenoid valves are periodically exercised during normal system use or as part of routine maintenance or surveillance activities and no additional exercise is necessary. The actual frequency of exercise necessary will depend on specific operating conditions. A successful operating history is the best indication of a proper interval between exercise cycles.
- Depending on medium and service conditions,periodic inspection of internal valve, operator movement and solenoid parts for damage or excessive wear is recommended. Thoroughly clean all parts. If parts are worn or damaged, install a complete ASCO Rebuild Kit.

Causes of Improper Operation

- **Incorrect Pressure:** Check valve pressure. Pressure to valve must be within range specified on nameplate.
- **Excessive Leakage:** Disassemble valve and clean all parts. If parts are worn or damaged, install a complete ASCO Rebuild Kit.

Valve Disassembly

1. Disassemble valve in an orderly fashion using exploded views for identification of parts.
2. Remove solenoid enclosure, see separate installation and maintenance instructions.
3. Unscrew cartridge sub-assembly from valve body.Then remove cartridge gasket and orifice gasket.
4. Clean valve and install a complete ASCO Rebuild Kit.

Valve Reassembly

1. Lubricate all gaskets with DOW CORNING® 111 Compound lubricant or an equivalent high-grade silicone grease.
2. Position cartridge gasket in valve body.
3. Install orifice gasket in recess in base of cartridge assembly.
4. Thread cartridge assembly with orifice gasket into valve body. Then torque cartridge assembly to 175±25 in-lbs [19,8±2,8 Nm].
5. Install solenoid, see separate instructions. Then make up piping and electrical connection to solenoid.

⚠ WARNING: To prevent the possibility of personal injury or property damage, check valve for proper operation before returning to service. Also perform internal leakage tests with a nonhazardous, concombustible fluid.

6. Restore line pressure and electric power supply to valve.
7. After maintenance is completed, operate the valve a few times to be sure of proper operation.

ORDERING INFORMATION FOR ASCO REBUILD KITS

Parts marked with an asterisk (*) in the exploded view are supplied in Rebuild Kits. When Ordering Rebuild Kits for ASCO valves, order the Rebuild Kit number stamped on the valve nameplate. If the number of the kit is not visible, order by indicating the number of kits required, and the Catalog Number and Serial Number of the valve(s) for which they are intended.

©ASCO Valve, Inc.® 50 Hanover Road, Florham Park, New Jersey 07932 www.ascovalve.com

Torque Chart

Part Name	Torque Value In-lbs	Torque Value Nm
Cartridge Assembly	175 ± 25	19,8 ± 2,8

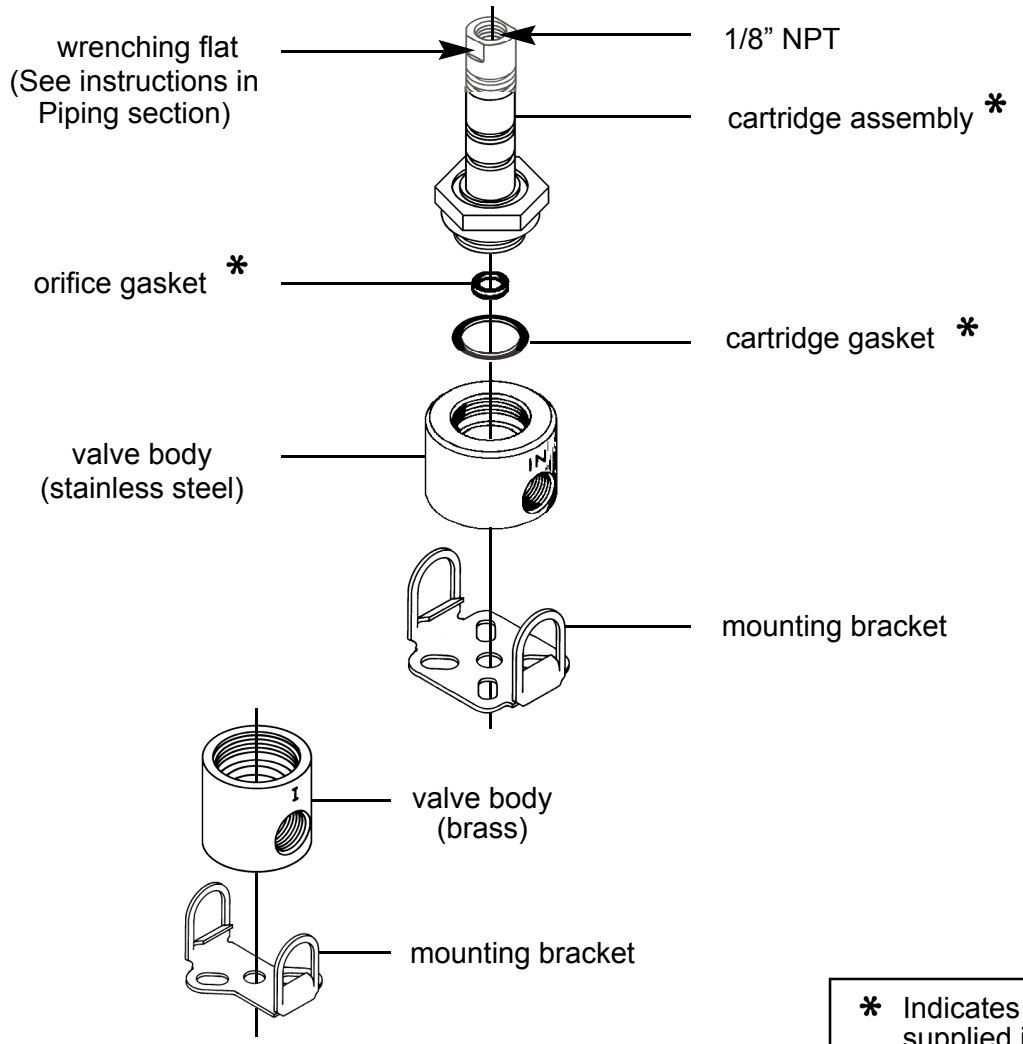

Figure 3. Series 8314 without solenoid

©ASCO Valve, Inc.® 50 Hanover Road, Florham Park, New Jersey 07932 www.ascovalve.com

Installation & Maintenance Instructions

ASCO® Red-Hat II®

2-WAY AND 3-WAY LOWER POWER GENERAL PURPOSE OR WATERTIGHT/EXPLOSIONPROOF SOLENOIDS

ASSEMBLY
HV 270684

Catalog Nos.
8003G300
8003G301

NOTICE: See separate valve installation and maintenance instructions for information on: Operation, Positioning, Mounting, Piping, Filter Requirements for Air or Inert Gas, Flow Controls, Cleaning, Preventive Maintenance, Cause of Improper Operation, Disassembly and Reassembly of Basic Valve.

DESCRIPTION

Catalog Numbers 8003G301 2-way construction and 8003G300 3-way construction are epoxy encapsulated pull-type solenoids. The green solenoid with lead wires and 1/2" NPT conduit connection is designed to meet Enclosure Type 1-General Purpose, Type 2- Dripproof, Types 3 and 3S-Raintight , and Types 4 and 4X - Watertight . The black solenoid on catalog numbers prefixed "EF" or "EV" is designed to meet Enclosure Types 3 and 3S -Raintight, Types 4 and 4X -Watertight, Types 6 and 6P Submersible,Type7(A,B,C, & D) Explosionproof Class I, Division 1, Groups A, B, C, & D and Type 9 (E, F, & G) - Dust - Ignition proof Class II, Division 1, Groups E, F, & G and Nonincendive for Class I, Division 2. Catalog number prefix "EV" denotes stainless steel construction.

Optional Feature For Type 1 - General Purpose Construction Only

This junction box construction meets Enclosure Types 2, 3, 3S, 4, and 4X. Only solenoids with 1/4" spade or screw terminals may have a junction box. The junction box provides a 1/2" conduit connection, grounding and spade or screw terminal connections within the junction box (See Figure 2).

OPERATION

Series 8003G - When the solenoid is energized, the core is drawn into the cartridge assembly.

INSTALLATION

Check nameplate for correct catalog number, service, and wattage. Check front of solenoid for voltage and frequency.

FOR BLACK ENCLOSURE TYPES 7 AND 9 ONLY

⚠CAUTION: To prevent fire or explosion, do not install solenoid and/or valve where ignition temperature of hazardous atmosphere is less than 85°C.

NOTE: These solenoids have an internal non-resetable thermal fuse to limit solenoid temperature in the event that extraordinary conditions occur which could cause excessive temperatures. These conditions include high input voltage, a jammed core, excessive ambient temperature or a shorted solenoid, etc. This unique feature is a standard feature only in solenoids with black explosionproof/dust-ignitionproof enclosures (Types 7 & 9).

⚠CAUTION: To protect the solenoid valve or operator, install a strainer or filter, suitable for the service involved in the inlet side as close to the valve or operator as possible. Clean periodically depending on service conditions.

Temperature Limitations

For maximum valve ambient temperatures, refer to chart. The temperature limitations listed only indicate maximum application temperatures for field wiring rated at 90°C. See valve installation and maintenance instructions for maximum fluid temperature.

Temperature Limitations For Catalog Numbers 8003G300 and 8003G301 Solenoids

Watt Rating	Class of Insulation	Maximum Ambient Temperature	
		°F	°C
1.4	F	140	60
1.7	F	140	60

Minimum ambient temperature -40°F (-40°C).

Positioning

This solenoid is designed to perform properly when mounted in any position. However, for optimum life and performance, the solenoid should be mounted vertically and upright to reduce the possibility of foreign matter accumulating in the cartridge assembly area.

Piping (General Instructions)

On some valve constructions, there is pilot exhaust (from the top of the solenoid) when the valve shifts. The pilot exhaust may be connected to the main exhaust if the air or inert gas cannot be exhausted directly to the atmosphere.

⚠CAUTION: Debris entering 1/8" NPT connection at top of cartridge assembly may cause valve malfunction. Use exhaust protector provided when venting to atmosphere or connect to an exhaust system. The exhaust protector provides a degree of protection against falling dirt, rain, sleet, snow and dust. External formation of ice on the exhaust protector may cause valve malfunction. For this case, an alternate means of venting is required.

Connect piping to valve according to markings on valve body. Refer to flow diagrams provided in OPERATION section of basic valve installation and maintenance instructions.

⚠CAUTION: To avoid damage or accidental disengagement of cartridge assembly from valve body, hold cartridge assembly securely by wrenching flats when installing or removing piping at 1/8" NPT connection on top of the solenoid.

All Rights Reserved.

©ASCO Valve, Inc®50 Hanover Road, Florham Park, New Jersey 07932 www.ascovalve.com

Apply pipe compound sparingly to male pipe threads only. If applied to valve threads,the compound may enter the valve and cause operational difficulty. Avoid pipe strain by properly supporting and aligning piping. When tightening the pipe, do not use valve or solenoid as a lever. Locate wrenches applied to valve body or piping as close as possible to connection point.

⚠CAUTION: These solenoids are intended for use on clean dry air or inert gas, filtered to 50 micrometers or better. The dew point of the media should be at least 10°C (18°F) below the minimum temperature to which any portion of the clean air/inert gas system could be exposed to prevent freezing. If lubricated air is used, the lubricants must be compatible with Buna N elastomers. Diester oils may cause operational problems. Instrument air in compliance with ANSI/ISA Standard S7.3-1975 (R1981) exceeds the above requirements and is, therefore, an acceptable media for these valves.

Wiring

Wiring must comply with local codes and the National Electrical Code. All solenoids supplied with lead wires are provided with a grounding wire which is green or green with yellow stripes and a 1/2" conduit connection. To facilitate wiring, the solenoid may be rotated 360° depending up on basic valve construction. For the watertight/explosionproof solenoids, electrical fittings must be approved for use in the approved hazardous locations. The wiring method for Nonincendive Class I, Division 2 locations shall be in accordance with Section 501-4(b) of the National Electrical Code. The field circuit may be incendive. Wiring methods suitable for ordinary locations may not be used for wiring in incendive circuits.

⚠CAUTION: Excessive conduit strain on solenoid housing may damage solenoid or cause valve malfunction. Be sure conduit and additional junction boxes within the conduit run to the solenoid housing are properly aligned and supported.

Additional Wiring Instructions For Junction Box (optional feature)

The junction box is used with spade or screw terminal solenoids only and is provided with a grounding screw and a 1/2" conduit connection. Connect #12-18 AWG standard copper wire only to the screw terminals. Within the junction box use field wire that is rated 90°C or greater for connections. After electrical hookup, replace cover gasket, cover and screws. Tighten screws evenly in a crisscross manner.

MAINTENANCE

⚠WARNING: To prevent the possibility of death, serious injury or property damage, turn off electrical power, depressurize solenoid valve and vent fluid to a safe area before servicing.

Cleaning

All solenoid operators and valves should be cleaned periodically. The time between cleaning will vary depending on medium and service conditions. In general, if the voltage to the solenoid is correct, sluggish valve operation, excessive noise or leakage will indicate that cleaning is required. In the extreme case faulty valve operation will occur and the valve may fail to shift. Clean strainer or filter when cleaning the valve.

Preventive Maintenance

- Keep medium flowing through the valve as free from dirt and foreign material as possible.
- Periodic exercise of the valve should be considered if ambient or fluid conditions are such that corrosion, elastomer degradation, fluid contamination build up, or other conditions that could impede solenoid valve shifting are possible. The actual frequency of exercise necessary will depend on specific operating conditions. A successful operating history is the best indication of a proper interval between exercise cycles.
- Depending on the medium and service conditions, periodic inspection of internal valve parts for damage or excessive wear is recommended. Thoroughly clean all parts. If parts are worn or damaged, install a complete rebuild kit.

Causes of Improper Operation

- **Faulty Control Circuit:** Check the electrical system by energizing the solenoid. Check for loose or blown fuses, open-circuited or grounded solenoid, broken lead wires or splice connections.
- **Burned-Out Solenoid:** Check for open-circuited solenoid. Replace if necessary. Check supply voltage; it must be the same as specified on name plate/retainer and marked on the solenoid.
- **Low Voltage:** Check voltage across the solenoid leads. Voltage must be at least 85% of rated voltage.

Solenoid Replacement / Disassembly & Reassembly

1. Disconnect conduit, coil leads, and grounding wire.
2. Remove piping from 1/8" NPT connection on top of solenoid for 3-way construction.

⚠CAUTION: To avoid damage or accidental disengagement of cartridge assembly from valve body, hold cartridge assembly securely by wrenching flats when installing or removing piping at top of solenoid.

3. Push down on solenoid. Then using a suitable screwdriver, insert blade between solenoid and nameplate/retainer. Pry up slightly and push to remove nameplate/retainer.
4. Slip solenoid and spring washer off cartridge assembly.
5. Unscrew cartridge assembly from valve body and remove orifice gasket and cartridge gasket.
6. Refer to basic valve installation and maintenance instructions for further disassembly.
7. When reassembling, torque cartridge assembly to 175 ± 25 in-lbs [19,8 ± 2,8 Nm].

ORDERING INFORMATION FOR ASCO SOLENOIDS

When Ordering Solenoids for ASCO Solenoid Valves, order the number stamped on the solenoid. Also specify voltage and frequency.

©ASCO Valve, Inc®50 Hanover Road, Florham Park, New Jersey 07932 www.ascovalve.com

Torque Chart

Part Name	Torque Value in Inch-Pounds	Torque Value in Newton-Meters
cartridge assembly	175 ± 25	19,8 ± 2,8

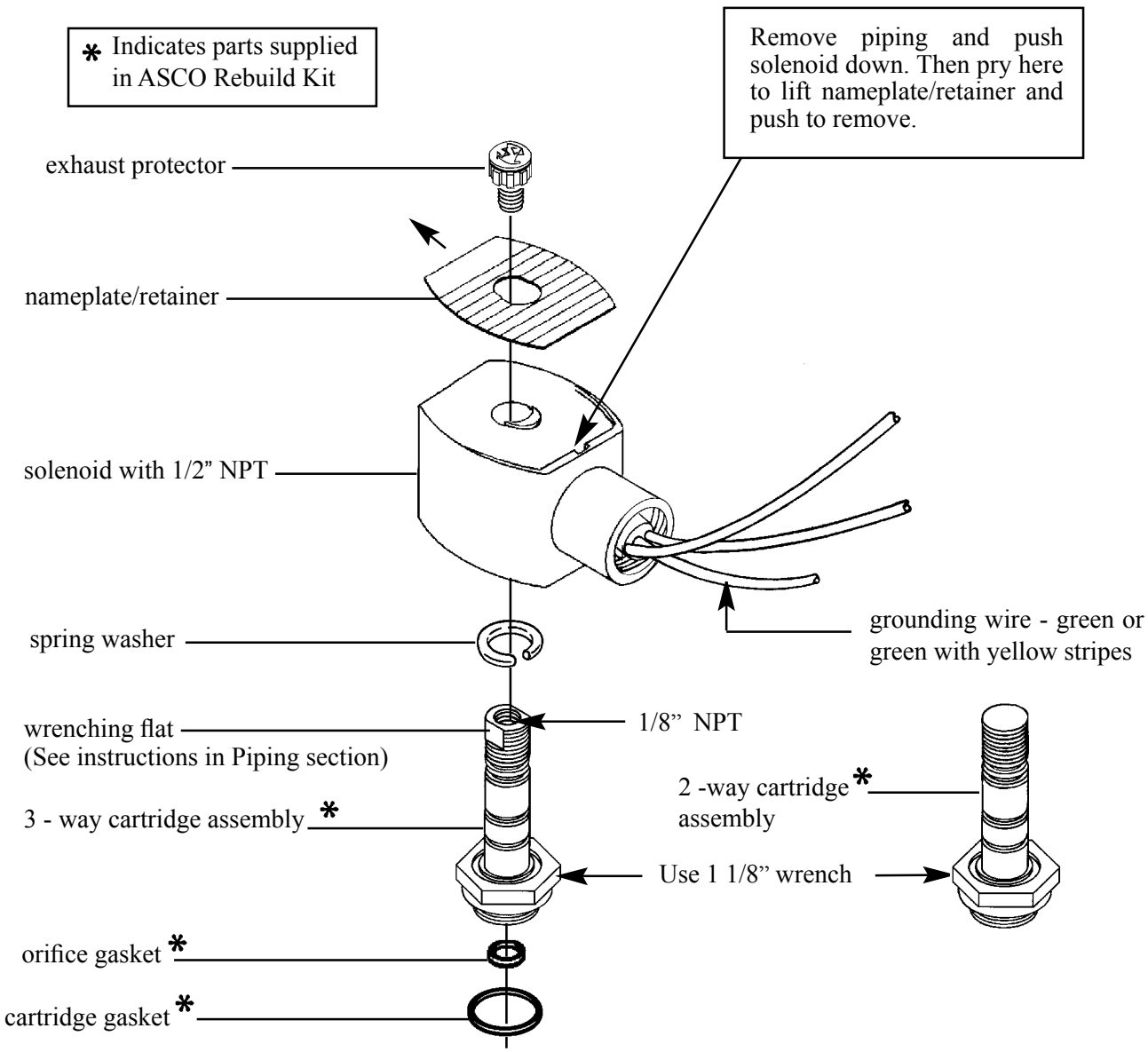

Figure 1. Assembly HV 270684 low power solenoid.

©ASCO Valve, Inc®50 Hanover Road, Florham Park, New Jersey 07932 www.ascovalve.com

Torque Chart

Part Name	Torque Value in Inch-Pounds	Torque Value in Newton-Meters
cartridge assembly	175 ± 25	19,8 ± 2,8
terminal block screw	10 ± 2	1,1 ± 0,2
socket head screw	15 - 20	1,7 - 2,3

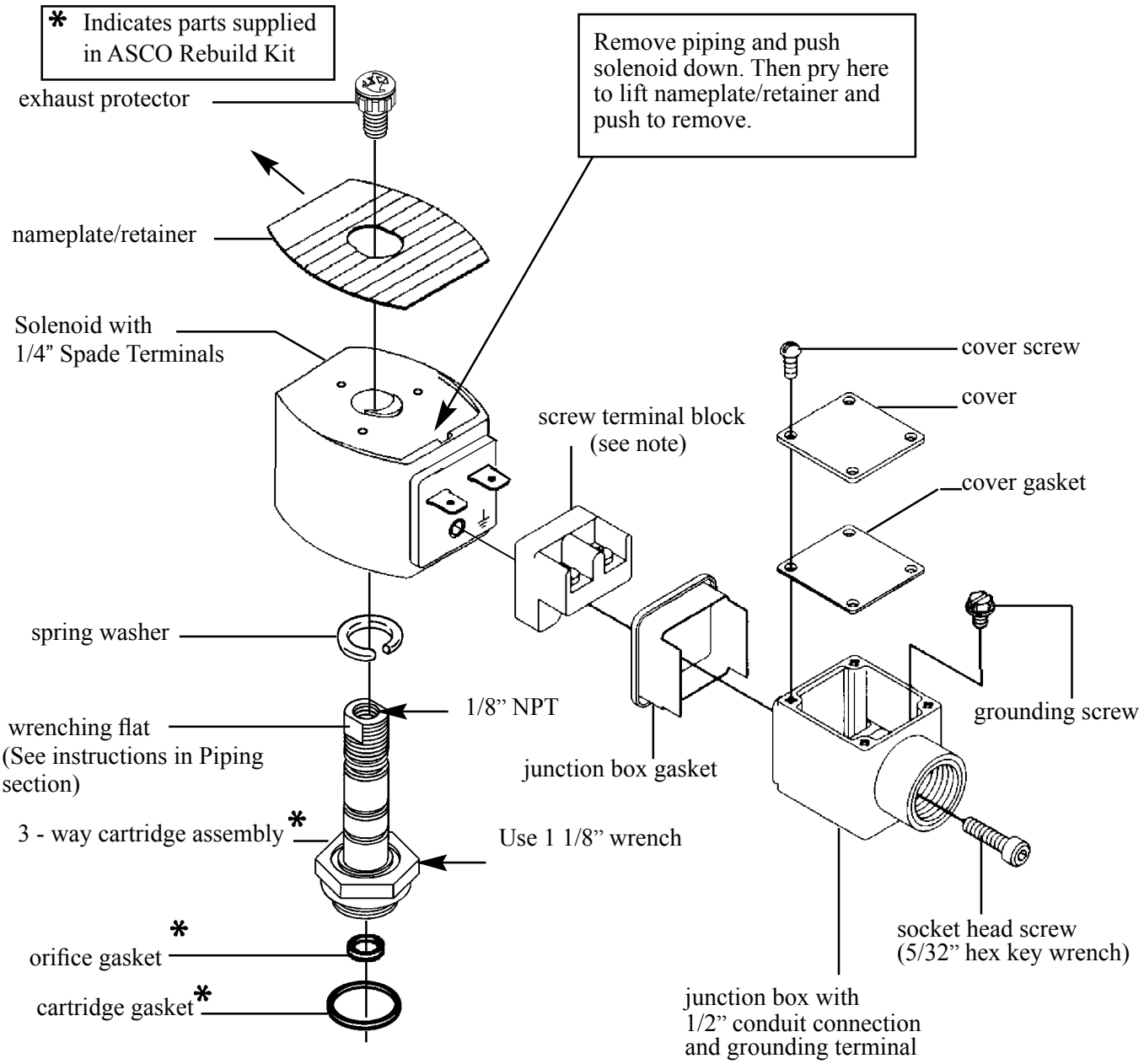

Note:

Junction box with screw terminals shown. With screw terminal block removed, remaining parts comprise the junction box for spade terminal construction.

Figure 2. Junction box solenoid with 1/4" spade terminals or screw terminals.

©ASCO Valve, Inc®50 Hanover Road, Florham Park, New Jersey 07932 www.ascovalve.com

Fisher® 657 and 667 Diaphragm Actuators

Fisher 657 and 667 spring-opposed diaphragm actuators position the valve plug in the valve in response to varying controller or valve positioner pneumatic output signals applied to the actuator diaphragm. Zero setting of the actuator is determined by the compression of the actuator spring. Span is set by both the actuator spring rate and the number of springs available. The 657 actuator is direct-acting; the 667 is reverse-acting. These actuators are designed to provide dependable on-off or throttling operation of automatic control valves.



657 ACTUATOR **667 ACTUATOR**

Fisher 657 and 667 Actuators Mounted on easy-e™ Valves

Features

- **Application Versatility—**Five actuator types in eleven sizes are available for an extensive variety of applications. Spring rates, travel stops, and manual operators are available for nearly any control valve application.
- **Excellent Linearity Between Loading Pressure and Travel—**A molded diaphragm travels in a deep diaphragm casing, minimizing area change throughout the travel.
- **High Degree of Dynamic Stability and Frequency Response—**A shallow casing on the pressure side means reduced volume on that side, thereby minimizing response time.
- **High Thrust Capability—**The molded diaphragm allows maximum thrust for given diaphragm size.
- **Long Service Life—**Rugged thick-walled cast iron and steel construction provides increased stability, corrosion protection, and protection from deformation should over-pressurization occur.
- **Cold Service Applications—**Enhanced product specifications for all sizes of 657 and 667 diaphragm actuators allow performance to -50°C (-58°F). Use of a positioner is recommended to ensure responsiveness in applications operating below -40°C (-40°F).
- **Positive Connections—**A split block stem connection provides a solid transfer of motion while allowing easy mounting. The absence of linkages helps to avoid lost motion and inaccurate valve positioning.

Specifications

Standard Operating Pressure Range(1)

657 and 667: ■ 0.2 to 1.0 bar (3 to 15 psig) or ■ 0.4 to 2.0 bar (6 to 30 psig)
657-4 and 667-4: 0.2 to 1.9 bar (3 to 27 psig)
667 Size 76: ■ 0.4 to 2.0 bar (6 to 30 psig) or ■ 0 to 3.1 bar (0 to 45 psig)

Maximum Travel

See table 1

Output Indication

Stainless steel disk or pointer and graduated scale

Stroking Speed

Dependent on actuator size, travel, spring rate, initial spring compression, and supply pressure. If stroking speed is critical, consult your Emerson Process Management sales office

Maximum Allowable Thrust(2)

See table 1

Operating Temperature Range(1)

Standard Construction (Nitrile Elastomers): -40 to 82°C (-40 to 180°F)
Optional Construction (Silicone Diaphragm): -40 to 149°C (-40 to 300°F)
Maximum Valve Packing Box Temperature: 427°C (800°F) with cast iron yoke

Volumetric Displacement

See table 2

Signal Connections

Sizes 30 - 60 and 667 Size 76: 1/4 NPT internal
Sizes 70 and 87: 1/2 NPT internal
Size 80
657: 3/4 NPT internal with 1/4 NPT internal bushing
667: 1/2 NPT internal with 1/4 NPT internal bushing
Size 100: 1 NPT internal with 1/4 NPT internal bushing

Effective Diaphragm Area

See table 1

Construction Materials (refer to figure 1)

Diaphragm Casing
Sizes 30 -87: Steel
Size 80: ■ Cast iron or ■ steel
Size 100: ■ Cast aluminum
Diaphragm
Sizes 30 -87: ■ Nitrile on nylon, ■ Silicone on polyester
Size 100: Nitrile on polyester
Diaphragm Plate
657 Sizes 30-60, 100: ■ Cast aluminum
657 Sizes 70 -87: ■ Cast iron or ■ steel
667 Sizes 30 -60, 100: ■ Cast aluminum or ■ steel
667 Sizes 70 -87: ■ Cast iron or ■ steel
Actuator Spring: Steel
Spring Adjustor: Steel
Spring Seat: ■ Steel or ■ cast iron
Actuator Stem: Steel
Travel Indicator: Stainless steel
O-Rings: Nitrile
Seal Bushing: Brass
Stem Connector: Zinc-plated steel
Yoke
Sizes 30 -80: ■ Cast iron or ■ steel
Size 100: Steel

Construction Materials for Cold Service [to -50°C (-58°F)] 657 and 667--all sizes

Yoke: Steel (Grade LCC)
Diaphragm: Silicone
O-Rings:(3) Ethylene Propylene
Bolting: Stainless Steel B8M Cl 2
Stem Connector: Stainless Steel
Lubricant: Silicone

Stem and Yoke Boss Diameters

See table 1

Approximate Weight

See table 3

Options

■ Oversize signal connections, ■ Plastic yoke covers, ■ Watertight yoke (sealed construction for certain applications where valve stem and packing must be protected)

1. The pressure and temperature limits in this bulletin and in any applicable standard or code limitation should not be exceeded.
2. Do not exceed the thrust limits in this bulletin.
3. Includes diaphragm casing seals, casing-mounted handwheel on 657, seal bushing on 667.

Available Configurations

Direct Action

All 657 actuators are direct acting. Applying air pressure to the upper diaphragm casing forces the actuator stem downward. When this pressure is reduced, the opposing spring force moves the actuator stem upward. Should the loading pressure fail, the spring forces the stem to the extreme upward position. This provides fail-open action for push-down-to-close valves and fail-closed action for push-down-to-open valves.

657—A direct-acting actuator used on sliding-stem valves. Available in sizes 30 through 100. See figures 1, 2, 5, and 6.

657-4—A 657 actuator in sizes 70 and 87, designed with 102 mm (4-inch) travel.

Reverse Action

All 667 actuators are reverse acting. Applying air pressure to the lower diaphragm casing forces the actuator stem upward against the opposing spring force. When this loading pressure is reduced, the spring moves the actuator stem downward. Should the loading pressure fail, the spring forces the stem to the extreme downward position. These actuators provide fail-closed action for push-down-to-close valves and fail-open action for push-down-to-open valves.

667—A reverse-acting actuator used on sliding-stem valves. Available in sizes 30 through 100 and 76. See figures 1, 2, and 7.

667-4—A 667 actuator in sizes 70 and 87, designed with 102 mm (4-inch) travel.

Accessories

Handwheels

Handwheels for diaphragm actuators are often used as adjustable travel stops. They also provide a ready means of positioning the control valve in an emergency. The specifications in tables 5 and 6 apply to handwheels on both 657 and 667 Series actuators. For repeated or daily manual operation, the unit should be equipped with a side-mounted handwheel actuator.

Top-Mounted Handwheels—Typical 657 and 667 actuators with handwheels mounted on the diaphragm case are shown in figure 2 (not available on a 667 actuator, size 80). On the 657 actuator, the handwheel can be set to limit the travel in the upward direction; on the 667 actuator, travel in the downward direction can be restricted. A P-2 travel stop (figure 4) is available for a 667 actuator, sizes 45-60 to limit travel in either the upward or downward directions. An actuator with a P-2 travel stop is limited to a maximum travel of 19 mm (0.75 inch). The handwheel on the size 100 is similar in function to those on the smaller sizes, but it uses a gear drive similar to the drive employed on the integral side-mounted handwheels (see figure 2).

Contents

Features 1
Specifications 2
Available Configurations 3
Direct Action 3
Reverse Action 3
Accessories 3
Handwheels 3
Adjustable Travel Stops 7
Other 7
Ordering Information 14

Tables
Additional Specifications 5
Volumetric Casing Displacement 6
Approximate Actuator Weights (without handwheel) 6
Thrust Capabilities 7
Handwheel Specifications 10
Adjustable Travel Stop Styles 11
Dimensions 14

Figure 1. Typical Actuators

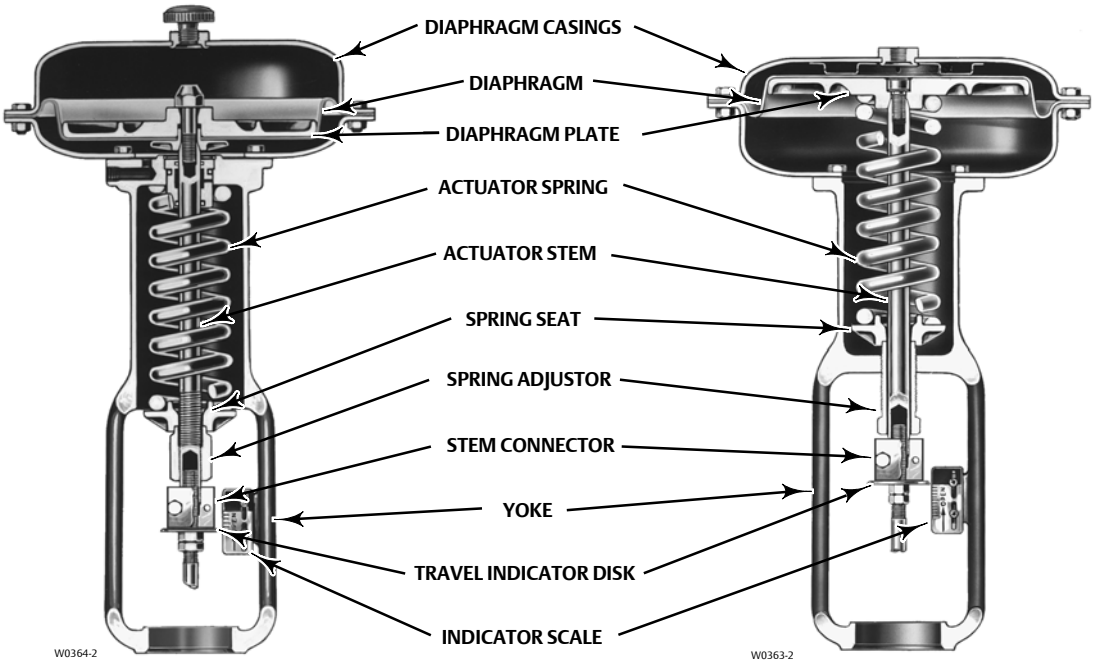

667 SIZES 30-87

657 SIZES 30-87



657 SIZE 100

Table 1. Additional Specifications for Fisher 657 and 667 Series Actuators

ACTUATOR SIZE	EFFECTIVE DIAPHRAGM AREA	YOKE BOSS DIAMETER	STEM DIA	MAXIMUM TRAVEL	MAXIMUM ALLOWABLE THRUST(1)
	cm^2	mm			N
30	297	54	9.5	19	10,231
34	445	54	9.5	29	10,231
40	445	71	12.7	38	12,010
45	677	71	12.7	51	25,132
46	1006	71	12.7	51	33,584
50	677	90	19.1	51	25,131
60	1006	90	19.1	51	30,246
70(2)	1419	90	19.1	76	39,142
				102(3)	
76(667)	1006	90	19.1	51	30,246
80	1761	127	25.4	76	63,392
			31.8		88,075(4)
87(2)	1419	127	25.4	76	39,142
				102(3)	
100	2902	127H(5)	31.8	102	200,160
		178	50.8		
	$Inch^2$	Inch			Lb
30	46	2-1/8	3/8	0.75	2300
34	69	2-1/8	3/8	1.125	2300
40	69	2-13/16	1/2	1.5	2700
45	105	2-13/16	1/2	2	5650
46	156	2-13/16	1/2	2	7550
50	105	3-9/16	3/4	2	5650
60	156	3-9/16	3/4	2	6800
70(2)	220	3-9/16	3/4	3	8800
				4(3)	
76(667)	156	3-9/16	3/4	2	6800
80	273	5	1	3	14,150
			1-1/4		19,800(4)
87(2)	220	5	1	3	8800
				4(3)	
100	450	5H(5)	1-1/4	4	45,000
		7	2		

1. These values are based on material limitations such as yoke, stem connection, diaphragm plate, and travel stop strengths.
2. Values also apply to 657-4 and 667-4 actuators.
3. For 657-4 and 667-4 actuator constructions.
4. Steel construction.
5. H=Heavy actuator-to-valve bolting.

Table 2. Volumetric Casing Displacement for Fisher 657 and 667 Series Actuators

ACTUATOR SIZE		CLEARANCE VOLUME(1)	TRAVEL, mm							
			11	16	19	29	38	51	76	102
		cm^3	Casing Volume(2), cm^3							
30		540	918	1080	1180	---	---	---	---	---
34 and 40		934	1470	1700	1850	2330	2790	---	---	---
45 and 50		1560	---	2790	3000	3720	4420	5410	---	---
46, 60, and 76		2180	---	3880	4210	5280	6340	7740	---	---
70 and 87		3490	5240	5950	6420	7830	9240	11,110	14,880	18,570
80		4820	---	---	---	10,490	12,450	14,860	19,340	---
100	657	10,880	---	---	16,400	19,170	21,940	25,630	33,000	40,380
	667	12,780	---	---	18,320	21,070	23,840	27,530	34,900	42,280
		Inch^3	TRAVEL, INCH							
			0.4375	0.625	0.75	1.125	1.5	2	3	4
			Casing Volume(2), Inch^3							
30		33	56	66	72	---	---	---	---	---
34 and 40		57	90	104	113	142	170	---	---	---
45 and 50		95	---	170	183	227	270	330	---	---
46, 60, and 76		133	---	237	257	322	387	472	---	---
70 and 87		213	320	363	392	478	564	678	980	1133
80		294	---	---	---	640	760	907	1180	---
100	657	664	---	---	1002	1170	1339	1564	2014	2464
	667	780	---	---	1118	1286	1455	1680	2130	2580

1. Clearance volume indicates casing volume at zero travel.
2. Includes clearance volume.

Table 3. Approximate Actuator Weights (without handwheel)

ACTUATOR SIZE	ACTUATOR			
	657	667	657	667
	Kg		Lb	
30	16	15	36	34
34	22	22	48	48
40	23	23	51	50
45	37	41	82	90
46	49	55	107	121
50	42	43	92	94
60	53	55	116	122
70	107	115	235	254
76	---	86	---	190
80	234	284	515	626
87	116	118	255	260
100	346	544	762	1200

Table 4. Thrust Capabilities[1] by Input Signal Range

TRAVEL	ACTUATOR SIZE	PRESSURE RANGE TO ACTUATOR DIAPHRAGM[2]	THRUST CAPABILITIES	
			657	667
mm		Bar	N	
19	30	0.2-1	2250	1840
		0.4-2	3890	3270
	34	0.2-1	3380	3380
		0.4-2	5830	5530
29	40	0.2-1	3380	2760
		0.4-2	5530	3680
	45	0.2-1	4670	4670
		0.4-2	8410	8870
	46	0.2-1	6940	6250
		0.4-2	13,190	11,800
38	50	0.2-1	5140	3740
		0.4-2	8410	7010
	60	0.2-1	6940	4860
		0.4-2	13,190	8330
51	70	0.2-1	7830	7830
		0.4-2	18,590	13,700
	80	0.2-1	10,110	11,250
		0.4-2	18,950	19,680
	87	0.2-1	6850	7830
		0.4-2	18,590	13,700
76	100	0.2-1	16,010	8010
		0.4-2	32,030	36,030
102		0.2-1	12,010	---
		0.4-2	22,019	28,024
Inch		Psig	Lb	
0.75	30	3-15	506	414
		6-30	874	736
	34	3-15	759	759
		6-30	1311	1242
1.125	40	3-15	759	621
		6-30	1242	828
	45	3-15	1050	1050
		6-30	1890	1995
	46	3-15	1560	1404
		6-30	2964	2652
1.5	50	3-15	1155	840
		6-30	1890	1575
	60	3-15	1560	1092
		6-30	2964	1872
2	70	3-15	1760	1760
		6-30	4180	3080
	80	3-15	2272	2528
		6-30	4260	4424
	87	3-15	1540	1760
		6-30	4180	3080
3	100	3-15	3600	1800
		6-30	7200	8100
4		3-15	2700	---
		6-30	4950	6300

1. For Size 76 667 actuators, contact your Emerson Process Management sales office.
2. Consult Fisher 657 and 667 instruction manuals (D100306X012, D100307X012, D100310X012, and D100311X012) for additional information on maximum pressure limitations.

Clockwise rotation of the handwheel on the 657 actuator moves the actuator stem downward, compressing the spring. Spring action returns the stem as the handwheel is turned counterclockwise. With the 667 actuator, counterclockwise rotation moves the stem upward, and spring action returns the stem on clockwise rotation.

Side-Mounted Handwheels—Figure 3 shows the side-mounted handwheels (designated by the letters MO) applicable to sizes 34 through 87, 657 and 667 actuators. Size 30 actuators do not have a side-mounted handwheel available.

All side-mounted handwheels can be used to stroke the valve in either direction at any point in the actuator stem travel. Unlike the top-mounted handwheel, the side-mounted handwheel can be positioned to limit travel in either direction, but not both at the same time. With the handwheel in the neutral position, automatic operation is possible throughout full valve travel. In any other position, valve travel will be restricted. The handwheel is furnished with a spring-loaded ball detent which prevents vibration from changing the setting.

Adjustable Travel Stops

Top-mounted adjustable travel stops are available for 657 and 667 Series actuators. They are used to limit travel in the up, down, or up and down directions. Figure 4 illustrates the different constructions. Table 7 locates the different style constructions with actuator type and use.

Other

Accessories such as transducers, positioners, position transmitters, air relays, volume boosters, switching valves, lockup valves, limit switches, and solenoid valves are also available for actuator mounting. They are described in separate publications. Contact your Emerson Process Management sales office for details.

Figure 2. Typical Top-Mounted Handwheels

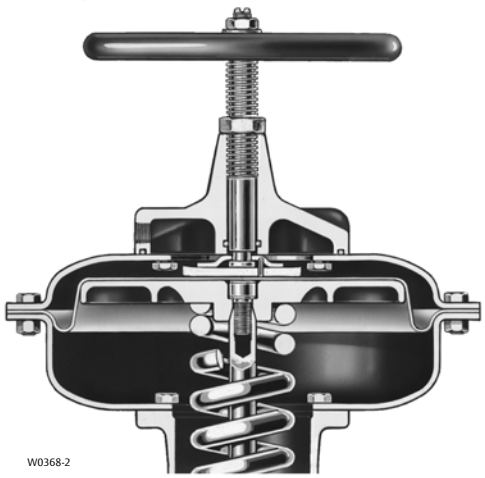

657 ACTUATOR
(EXCEPT SIZE 100)

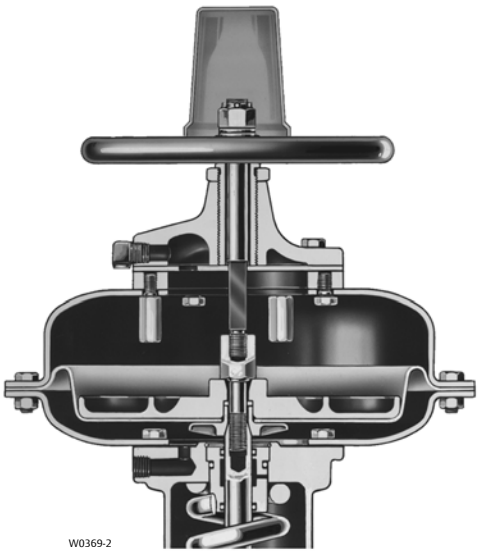

667 ACTUATOR
(EXCEPT SIZES 80 AND 100)

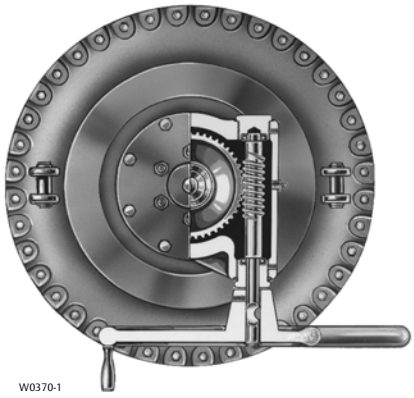

TOP VIEW

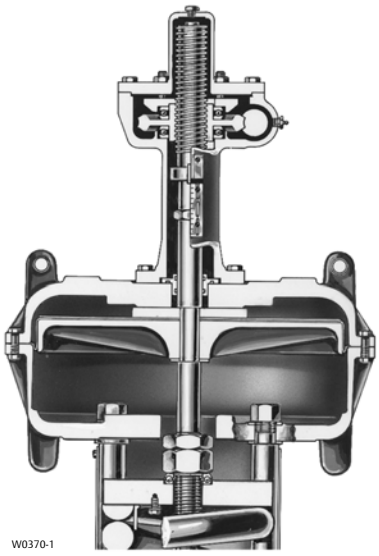

657 ACTUATOR SIZE 100
(GEAR DRIVEN)

Figure 3. Typical Side-Mounted Handwheels for Fisher 657 and 667 Series Actuators



SIZES 34 THROUGH 60

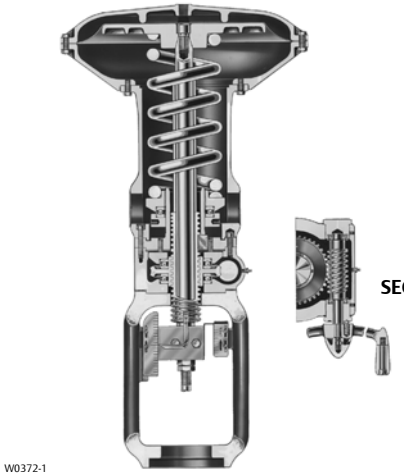

SIZES 70, 76, 80, AND 87

Figure 4. Adjustable Travel Stops

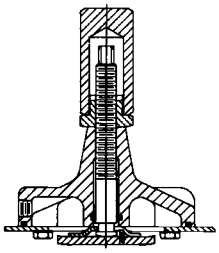

STYLE 1
657 AND 657-4
UP STOP

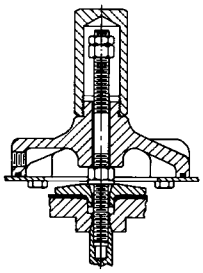

STYLE 2
657 AND 657-4
DOWN STOP

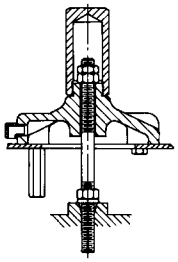

STYLE 10
667 DOWN STOP

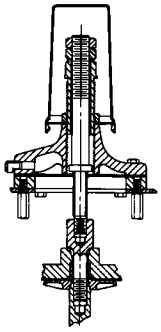

STYLE 11
667 UP
AND DOWN STOP

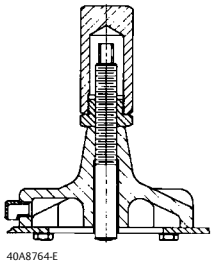

STYLE 12
667 UP STOP

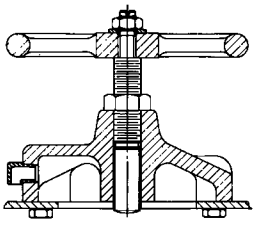

STYLE 13
667 UP STOP

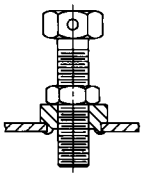

STYLE 14
667 UP STOP

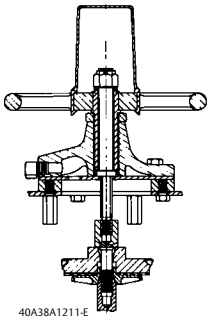

STYLE P2
667 UP AND
DOWN STOP

Table 5. Fisher 657 Handwheel Specifications

657 ACTUATOR SIZE	TOP-MOUNTED HANDWHEEL				SIDE-MOUNTED HANDWHEEL			
	Handwheel Diameter	Turns Per mm Travel	Rim Force(1)	Maximum Handwheel Output Force(3)	Handwheel Diameter	Turns Per mm Travel	Rim Force(1)	Maximum Handwheel Output Force(3)
	mm		N	N	mm		N	N
30	171	0.3	190	6670	---	---	---	---
34 and 40	222	0.3	210	10,010	304	0.2	230	10,010
45 and 50	222	0.3	420	15,080	355	0.3	360	15,080
46 and 60	222	0.3	490	22,690	355	0.3	540	22,690
70 and 87	355	0.3	590	29,360	432	0.8	160	29,360
80	355	0.3	770	37,770	432	0.4	240	37,770
100(2)	406	6	270	160,000	---	---	---	---
	Inch	Turns Per Inch Travel	Lb	Lb	Inch	Turns Per Inch Travel	Lb	Lb
30	6.75	8	42	1500	---	---	---	---
34 and 40	8.75	8	48	2250	12	5.14	52	2250
45 and 50	8.75	8	95	3390	14	6.65	81	3390
46 and 60	8.75	8	110	5100	14	6.65	122	5100
70 and 87	14	8	132	6600	17	20	36	6600
80	14	8	173	8490	17	10	53	8490
100(2)	16	144	60	36,000	---	---	---	---

1. Tangential handwheel force required to produce the handwheel output force shown. (Proportional to handwheel output force).
2. Top-mounted with gear drive.
3. Maximum force available to compress the actuator spring and close the valve.

Table 6. Fisher 667 Handwheel Specifications

667 ACTUATOR SIZE	TOP-MOUNTED HANDWHEEL				SIDE-MOUNTED HANDWHEEL				
	Handwheel Diameter	Turns Per mm Travel	Rim Force(1)	Maximum Handwheel Output Force(3)	667 ACTUATOR SIZE	Handwheel Diameter	Turns Per mm Travel	Rim Force(1)	Maximum Handwheel Output Force(3)
	mm		N	N		mm		N	N
30	171	0.3	200	6670	30	---	---	---	---
34 and 40	222	0.3	230	10,010	34 and 40	304	0.2	230	10,010
45 and 50	222	0.2	460	17,790	45 and 50	355	0.3	360	15,080
	355	0.2	430	26,690					
46, 60, and 76	222	0.2	460	17,790	46 and 60	355	0.3	540	22,690
	355	0.2	430	26,690					
70 and 87	355	0.2	520	26,690	70, 76, and 87	432	0.8	160	29,360
	762 mm Bar	0.2	410	44,480					
100(2)	406	6	270	160,000	80	432	0.4	240	37,770
667 ACTUATOR SIZE	**Inch**	**Turns Per Inch Travel**	**Lb**	**Lb**	**667 ACTUATOR SIZE**	**Inch**	**Turns Per Inch Travel**	**Lb**	**Lb**
30	6.75	8	45	1500	30	---	---	---	---
34 and 40	8.75	8	51	2250	34 and 40	12	5.14	52	2250
45 and 50	8.75	6	103	4000	45 and 50	14	6.65	81	3390
	14	6	97	6000					
46, 60, and 76	8.75	6	103	4000	46 and 60	14	6.65	122	5100
	14	6	97	6000					
70 and 87	14	6	118	6000	70, 76, and 87	17	20	36	6600
	30 Inch Bar	6	92	10000					
100(2)	16	144	60	36,000	80	17	10	53	8490

1. Tangential handwheel force required to produce the handwheel output force shown. (Proportional to handwheel output force).
2. Top-mounted with gear drive.
3. Maximum force available to compress actuator spring.

Table 7. Adjustable Travel Stop Styles (1)

Actuator Size	30	34	40	45	46	50	60 and 667 Size 76	70	87	80	100
657 Up Stop	1	1	1	1	1	1	1	1	1	NOTE 2	NOTE 2
657 Down Stop	2	2	2	2	2	2	2	2	2	---	---
667 Up Stop	12, 13(3), 14	12, 13(3), 14	12, 13(3), 14	12, 13(3), 14	12, 13(3), 14	12, 13(3), 14	12, 13(3), 14	12	12	13(3)	---
667 Down Stop	10	10	10	10	10	10	10	10	10	---	NOTE 2
667 Up and Down Stop	---	11	11	11(4), P2(5)	11(4), P2(5)	11(4), P2(5)	11(4), P2(5)	---	---	---	---

1. See figure 4.
2. Top-mounted handwheel, see figure 2.
3. Adjustable handwheel up stop.
4. 38 mm (1.5 inch) maximum travel.
5. Adjustable handwheel up and down stop, 19 mm (0.75 inch) maximum travel.

Figure 5. Fisher 646 Electro-Pneumatic Transducer on 657 Actuator



W4917-1

Figure 6. Fisher 3582i Valve Positioner on 657 Actuator



W4930

Figure 7. Fisher 4200 Position Transmitter on 667 Actuator



W4273-1

Table 8. Dimensions

DIMENSION REFERENCE		ACTUATOR SIZE												
		30	34	40	45	46	47	50	60	70	76	80	87	100
		mm												
B	657, -4	0	25	25	38	38	38	38	38	38	---	---	38	---
	667, -4	38	38	38	38	38	38	38	38	38	38	---	38	---
C		289	333	333	406	473	536	406	473	536	473	635	536	729
D		54	54	71	71	71	71	90	90	90	90	127	127	127[2]
E	657	440	498	548	659	656	---	722	722	840	---	1075	938	NOTE 3
	657-4	---	---	---	---	---	---	---	---	994	---	---	1089	---
	657MO[1]	440	498	548	659	656	---	722	722	976	---	1183	1057	NOTE 4
	657-4 MO	---	---	---	---	---	---	---	---	1124	---	---	1204	---
	667	478	573	594	768	748	---	784	784	933	881	1257	1003	1857
	667-4	---	---	---	---	---	---	---	---	1070	---	---	1143	---
	667MO	478	573	594	768	748	---	784	784	1164	1112	1392	1245	2346
	657-4 MO	---	---	---	---	---	---	---	---	1314	---	---	1394	---
H_c	657	121	164	164	202	202	---	202	202	313	---	227	313	---
	667	119	121	137	159	159	---	159	159	286	159	---	286	---
H_s		---	284	286	375	375	---	378	378	292	222	303	292	401
J_c		171	222	222	222	222	356	222	222	356	356	356	356	---
J_s		---	305	305	356	356	---	356	356	432	432	432	432	406
K	657, -4	213	222	272	291	291	395	354	354	406	---	435	780	451
	667, -4	194	224	244	310	310	---	325	325	375	375	432	419	451
M	657, -4	---	226	248	306	306	---	370	370	446	---	503	527	NOTE 5
	667, -4	---	214	248	362	362	---	378	378	446	446	503	527	2105
N	657	---	---	---	---	---	---	---	---	---	---	254	---	---
	657MO	---	---	---	---	---	---	---	---	219	---	384	219	---
	657-4MO	---	---	---	---	---	---	---	---	219	---	---	219	---
	667	---	---	---	---	---	---	---	---	---	---	254	---	---
	667MO	---	---	---	---	---	---	---	---	219	219	384	219	---
	667-4MO	---	---	---	---	---	---	---	---	219	---	---	219	---
		Inches												
B	657, -4	0.00	1.00	1.00	1.50	1.50	1.50	1.50	1.50	1.50	---	---	1.50	---
	667, -4	1.50	1.50	1.50	1.50	1.50	1.50	1.50	1.50	1.50	1.50	---	1.50	---
C		11.38	13.12	13.12	16.00	18.62	21.12	16.00	18.62	21.12	18.62	25.00	21.12	28.69
D		2.125	2.125	2.8125	2.8125	2.8125	2.8125	3.5625	3.5625	3.5625	3.5625	5	5	5[2]
E	657	17.31	19.62	21.56	25.94	25.81	---	28.44	28.44	33.06	---	42.31	36.94	NOTE 3
	657-4	---	---	---	---	---	---	---	---	39.12	---	---	42.88	---
	657MO	17.31	19.62	21.56	25.94	25.81	---	28.44	28.44	38.44	---	46.56	41.62	NOTE 4
	657-4 MO	---	---	---	---	---	---	---	---	44.25	---	---	47.38	---
	667	18.81	22.56	23.38	30.25	29.44	---	30.88	30.88	36.75	34.70	49.50	39.50	73.12
	667-4	---	---	---	---	---	---	---	---	42.12	---	---	45.00	---
	667MO	18.81	22.56	23.38	30.25	29.44	---	30.88	30.88	45.81	43.76	54.81	49.00	92.38
	657-4 MO	---	---	---	---	---	---	---	---	51.75	---	---	54.88	---
H_c	657	4.75	6.44	6.44	7.94	7.94	---	7.94	7.94	12.31	---	8.94	12.31	---
	667	4.69	4.75	5.38	6.25	6.25	---	6.25	6.25	11.25	6.25	---	11.25	---
H_s		---	11.19	11.25	14.75	14.75	---	14.88	14.88	11.50	11.50	11.94	11.50	15.78
J_c		6.75	8.75	8.75	8.75	8.75	14.00	8.75	8.75	14.00	8.75	14.00	14.00	---
J_s		---	12.00	12.00	14.00	14.00	---	14.00	14.00	17.00	17.00	17.00	17.00	16.00
K	657, -4	8.38	8.75	10.69	11.44	11.44	15.56	13.94	13.94	16.00	---	17.12	18.88	17.75
	667, -4	7.62	8.83	9.62	12.19	12.19	---	12.81	12.81	14.75	14.75	17.00	16.50	17.75
M	657, -4	---	8.88	9.75	12.06	12.06	---	14.56	14.56	17.56	---	19.81	20.75	NOTE 5
	667, -4	---	8.44	9.75	14.25	14.25	---	14.88	14.88	17.56	17.56	19.81	20.75	82.88
N	657	---	---	---	---	---	---	---	---	---	---	10.00	---	---
	657MO	---	---	---	---	---	---	---	---	8.62	---	15.12	8.62	---
	657-4MO	---	---	---	---	---	---	---	---	8.62	---	---	8.62	---
	667	---	---	---	---	---	---	---	---	---	---	10.00	---	---
	667MO	---	---	---	---	---	---	---	---	8.62	8.62	15.12	8.62	---
	667-4MO	---	---	---	---	---	---	---	---	8.62	---	---	8.62	---

1. MO = Manual operator.
2. Also available with 7 inch boss.
3. With group 1 springs, E=1959 mm (77.12 inch). With group 2 springs, E=1497 mm (58.94 inch).
4. With group 1 springs, E=2345 mm (92.31 inch). With group 2 springs, E=1883 mm (74.12 inch).
5. With group 1 springs, M=2103 mm (82.81 inch). With group 2 springs, M=1654 mm (65.12 inch).

Figure 8. Dimensions (also see table 8)

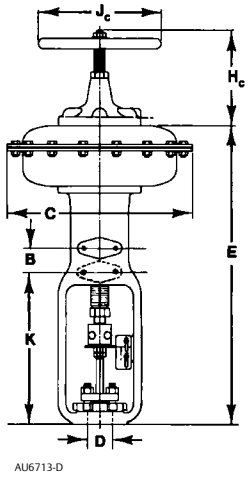

**657, 667,
657-4, AND 667-4
SIZES 30 THROUGH 87**

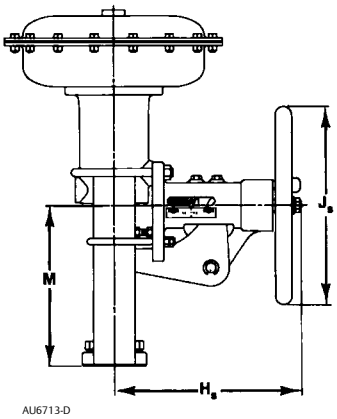

**657, 667,
657-4, AND 667-4
SIZES 30 THROUGH 87**

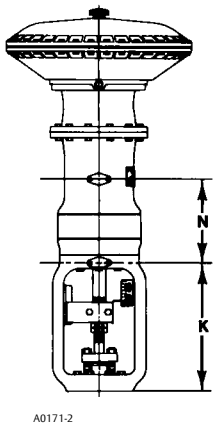

**ALL TYPES
SIZES 70, 80, 87, AND
667 SIZE 76**

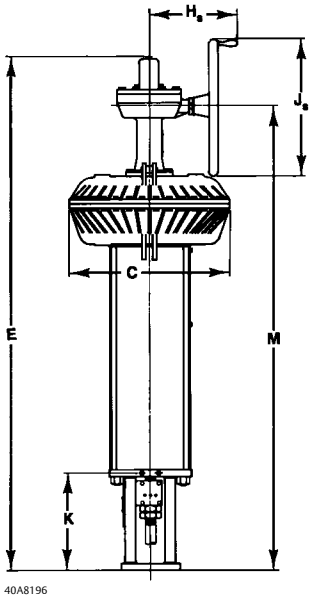

**657 AND 667
SIZE 100**

Ordering Information

When ordering, specify:

Application

1. On-off or throttling service

2. Input signal range

3. Maximum supply pressure

4. Valve body type and size with which the actuator will be used

5. Valve plug travel

6. Actuator thrust required with actuator stem both fully retracted and fully extended

7. Stroking time requirements, if critical

8. Seismic requirements, if critical

9. Ambient temperature range

Actuator and Positioner

Be sure to specify: actuator type number; whether a positioner is required; whether a top-mounted handwheel is required; and whether an adjustable up or down travel stop is required. Refer to the Specifications section. Review the information under each specification and in the referenced tables and figures. Specify the desired choice wherever there is a selection to be made.

Valve Body and Accessories

Refer to the separate valve body bulletin and bulletins covering accessories for ordering information.

Neither Emerson, Emerson Process Management, nor any of their affiliated entities assumes responsibility for the selection, use or maintenance of any product. Responsibility for proper selection, use, and maintenance of any product remains solely with the purchaser and end user.

Fisher and easy-e are marks owned by one of the companies in the Emerson Process Management business unit of Emerson Electric Co. Emerson Process Management, Emerson, and the Emerson logo are trademarks and service marks of Emerson Electric Co. All other marks are the property of their respective owners.

The contents of this publication are presented for informational purposes only, and while every effort has been made to ensure their accuracy, they are not to be construed as warranties or guarantees, express or implied, regarding the products or services described herein or their use or applicability. All sales are governed by our terms and conditions, which are available upon request. We reserve the right to modify or improve the designs or specifications of such products at any time without notice.

Emerson Process Management
Marshalltown, Iowa 50158 USA
Sorocaba, 18087 Brazil
Chatham, Kent ME4 4QZ UK
Dubai, United Arab Emirates
Singapore 128461 Singapore

www.Fisher.com

© 1990, 2012 Fisher Controls International LLC. All rights reserved.

Fisher® 667 Diaphragm Actuator Sizes 30-76 and 87

Contents

Introduction 1
Scope of Manual 1
Description 2
Specifications 3
Educational Services 3
Maximum Pressure Limitations 3
Installation 4
Mounting the Actuator on the Valve 5
Discussion of Bench Set 6
Spring Verification 7
Installing the Stem Connector Assembly 9
Friction Discussion 10
Deadband Measurement 11
Loading Connection 12
Maintenance 12
Actuator 13
Top-Mounted Handwheel Assembly (Adjustable Down Travel Stop) 15
Side-Mounted Handwheel Assembly for Size 34 through 60 Actuators 19
Side-Mounted Handwheel Assembly for Size 70, 76, and 87 Actuators 20
Casing-Mounted Travel Stops 22
Parts Kits 24
Side-Mounted Handwheels Retrofit Kits 24
Top-Mounted Handwheel Retrofit Kits 24
Actuator Repair Kits 24

Figure 1. Fisher 667 or 667-4 Actuator Mounted on easy-e™ Valve



W1916-1*

Parts List 24
Actuator Assembly 24
Top-Mounted Handwheel 25
Side-Mounted Handwheel (34-60) 33
Side-Mounted Handwheel (70, 76, and 87) 33
Casing Mounted Travel Stops 35

Introduction

Scope of Manual

This instruction manual provides information on installation, adjustment, maintenance, and parts ordering for the Fisher 667 actuator in sizes 30 through 76 and size 87. The 667-4 actuator in sizes 70 and 87 is also covered. Refer to separate instruction manuals for information about the valve positioner and other accessories used with these actuators.

Do not install, operate, or maintain a 667 actuator (see figure 1) without being fully trained and qualified in valve, actuator, and accessory installation, operation, and maintenance. **To avoid personal injury or property damage, it is important to carefully read, understand, and follow all the contents of this manual, including all safety cautions and warnings.** If you have any questions about these instructions, contact your Emerson Process Management sales office before proceeding.

Table 1. Specifications

SPECIFICATION[1]		ACTUATOR SIZE									
		30	34	40	45	46	50	60	70[1]	76	87[1]
Nominal Effective Area	Sq cm	297	445	445	667	1006	677	1006	1419	1006	1419
	Sq Inch	46	69	69	105	156	105	156	220	156	220
Yoke Boss Diameter	mm	54	54	71	71	71	90	90	90	90	125
	Inch	2-1/8	2-1/8	2-13/16	2-13/16	2-13/16	3-9/16	3-9/16	3-9/16	3-9/16	5
Acceptable Valve Stem Diameter	mm	9.5	9.5	12.7	12.7	12.7	19.1	19.1	19.1	19.1	25.4
	Inch	3/8	3/8	1/2	1/2	1/2	3/4	3/4	3/4	3/4	1
Maximum Allowable Output Thrust[4]	N	10230	10230	12010	25131	33582	25131	30246	39142	30246	39142
	LB	2300	2300	2700	5650	7550	5650	6800	8800	6800	8800
Maximum Travel[2]	mm	19	29	38	51	51	51	51	76[3]	51	76[3]
	Inch	0.75	1.125	1.5	2	2	2	2	3[3]	2	3[3]
Maximum Casing Pressure for Actuator Sizing[4,6]	Bar	3.8	4.8	4.8	4.5	3.8	4.5	3.8	3.4	3.4	3.4
	Psig	55	70	70	65	55	65	55	50	50	50
Maximum Excess Diaphragm Pressure[4,5]	Bar	3.8	1.4	1.4	0.7	0.7	0.7	0.7	0.7	0.7	0.7
	Psig	55	20	20	10	10	10	10	10	10	10
Maximum Diaphragm Casing Pressure[4,6,7]	Bar	7.6	6.2	6.2	5.2	4.5	5.2	4.5	4.1	4.1	4.1
	Psig	110	90	90	75	65	75	65	60	60	60
Approximate Weight	Kg	15	22	23	41	55	43	55	115	86	118
	Pounds	34	48	50	90	121	94	122	254	190	260
Material Temperature Capabilities	Nitrile Elastomers	-40 to 82°C (-40 to 180°F)									
	Silicone Elastomers	-54 to 149°C (-65 to 300°F)									

1. These values also apply to the 667-4 actuator construction.
2. Actuator travel may be less than the value listed after connected to the valve.
3. Maximum actuator travel for 667-4 is 102 mm (4 inches).
4. See also the Specifications portion of the introduction section.
5. Additional pressure may be added when the actuator is at full travel. If the Maximum Excess Diaphragm Pressure is exceeded, damage to the diaphragm or diaphragm casing might result. See the Maximum Pressure Limitation section.
6. Maximum diaphragm casing pressure must not be exceeded and must not produce a force on the actuator stem greater than the maximum allowable actuator output thrust or the maximum allowable stem load. See the Maximum Pressure Limitation section.
7. This maximum casing pressure is not to be used for normal operating pressure. Its purpose is to allow for typical regulator supply settings and/or relief valve tolerances.

Description

The 667 actuator (figure 1) and the 667-4 actuator are reverse-acting, spring-opposed diaphragm actuators. They provide automatic operation of control valves. The 667 actuator provides 76 mm (3 inches) maximum actuator travel. The 667-4 actuator provides 102 mm (4 inches) maximum actuator travel. Both actuators position the valve plug in response to varying pneumatic loading pressure on the diaphragm. Figure 2 shows the operation of these actuators.

A 667 or 667-4 actuator can be furnished with either a top-mounted or a side-mounted handwheel assembly. A top-mounted handwheel assembly is normally used as an adjustable down travel stop. (A down travel stop limits actuator travel in the down direction [when the stem is traveling out of the actuator]. Travel in the up direction is when the stem is traveling into the actuator.) A side-mounted handwheel assembly is normally used as an auxiliary manual actuator. The side-mounted handwheel can also be used as an adjustable up or down travel stop. Casing-Mounted adjustable up or down travel stops are also available on this actuator.

Note

If repeated or daily manual operation is expected, the actuator should be equipped with a side-mounted handwheel rather than a casing-mounted travel stop or top-mounted handwheel. The side-mounted handwheel is designed for more frequent use as a manual operator.

Figure 2. Schematic of Fisher 667 and 667-4 Actuators

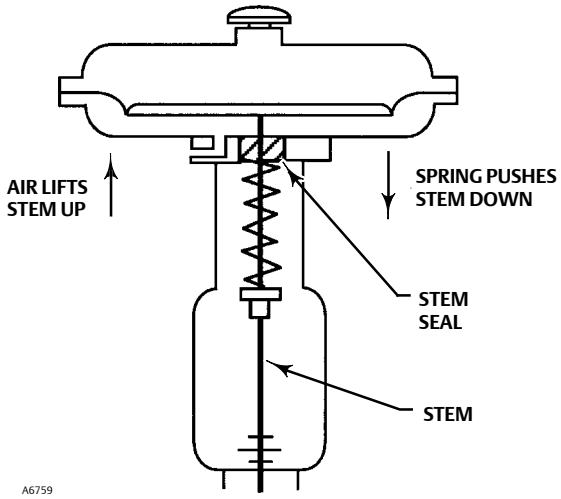

Specifications

Refer to table 1 for Specifications of the 667 and 667-4 actuators. See the actuator nameplate for specific information for your actuator.

Educational Services

For information on available courses for Fisher 667 diaphragm actuators, as well as a variety of other products, contact:

Emerson Process Management
Educational Services, Registration
P.O. Box 190; 301 S. 1st Ave.
Marshalltown, IA 50158-2823
Phone: 800-338-8158 or
Phone: 641-754-3771
FAX: 641-754-3431
e-mail: education@emerson.com

⚠ WARNING

To avoid personal injury or damage to equipment that may result in the malfunction of the control valve or loss of control of the process caused by excessive pressure, do not exceed the Maximum Pressures listed in table 1. Refer to the Maximum Pressure Limitations section.

Maximum Pressure Limitations

The casing and diaphragm of 667 actuators are pressure operated. This air pressure provides energy to compress the spring, to stroke the actuator, and to seat the valve. The following explanations describe the maximum pressure limits for an actuator. Refer to the nameplate or table 1 for maximum values for your actuator.

- Maximum Casing Pressure for Actuator Sizing: This is the maximum pressure that can be applied at less than full travel of the actuator. If this stroking pressure is exceeded before the upper diaphragm plate contacts the travel stop, damage to the stem or other parts might result.

- Maximum Excess Diaphragm Pressure: Additional pressure may be added when the actuator is at full travel. If the Maximum Excess Diaphragm Pressure is exceeded, damage to the diaphragm or diaphragm casing might result.

Because the actuator has traveled its specified travel, and the diaphragm head is physically stopped from movement, the energy from any additional air pressure is transmitted to the diaphragm and diaphragm casings. The amount of air pressure that can be added once the actuator has traveled to the stops is limited by the resultant adverse effects that may occur. Exceeding this limiting factor could result in leakage or casing fatigue due to the deformation of the upper diaphragm casing.

- Maximum Diaphragm Casing Pressure: If the Maximum Diaphragm Casing Pressure is exceeded, damage to the diaphragm, diaphragm casing, or actuator might result.

Installation

⚠ WARNING

Always wear protective gloves, clothing, and eyewear when performing any installation operations.

Check with your process or safety engineer for any other hazards that may be present from exposure to process media.

If installing into an existing application, also refer to the WARNING at the beginning of the Maintenance section in this instruction manual.

Key number locations are shown in figures 6, 7, and 8, unless otherwise noted. Also, refer to figure 3 for location of parts.

CAUTION

To avoid parts damage, do not use an operating pressure that exceeds the Maximum Diaphragm Casing Pressure (table 1) or produces a force on the actuator stem greater than the Maximum Allowable Output Thrust (table 1) or the Maximum Allowable Valve Stem Load.

- Valve/Actuator Assembly: If the actuator and valve are shipped together as a control valve assembly, it has been adjusted at the factory, and may be installed in the pipeline. After installing the valve in the pipeline, refer to the Loading Connection procedures.

- Actuator Mounting: If the actuator is shipped separately or the actuator has been removed from the valve, it is necessary to mount the actuator on the valve before placing the valve in the pipeline. Refer to the following actuator mounting procedures before placing the valve in service. It is recommended that you perform the Bench Set Spring Adjustment procedures in this section to confirm that the actuator is adjusted correctly for the valve travel.

- Positioner: If a positioner is installed, or is to be installed on the actuator, refer to the positioner instruction manual for installation. During the adjustment procedures, it will be necessary to provide a temporary loading pressure to the actuator diaphragm.

- **Handwheel Cap:** If the handwheel cap (key 247, figures 9, 11, or 17) is not in place, install the cap by pushing it on by hand until it snaps into place.

Mounting the Actuator on the Valve

CAUTION

The 667 actuator spring load pushes the stem down out of the actuator yoke (see figure 2), and it can come in contact with the valve stem during actuator mounting.

If the valve stem is allowed to remain in the up position (towards the actuator) during actuator mounting, it can interfere with the actuator stem during mounting. It is possible to damage valve stem threads or bend the valve stem. Be sure the valve stem is pushed down (into the valve body), away from the actuator while mounting.

It may be necessary to apply a temporary loading pressure to the actuator to move the actuator stem away from the valve during installation.

If it is not possible to provide a temporary loading pressure, be very careful when lowering the actuator over the valve stem to prevent damage to valve stem and threads.

⚠ WARNING

When moving the actuator stem with loading pressure applied, exercise caution to keep hands and tools out of the actuator stem travel path. If the loading pressure is accidently disconnected, personal injury and property damage may result if something is caught between the actuator stem and other control valve parts.

1. Provide a vise or some other method of supporting the valve and the weight of the actuator during assembly. For direct or reverse acting valves, push the valve stem down away from the actuator while mounting the actuator.
2. Screw the stem locknuts all the way onto the valve stem. With the concave side of the travel indicator disk (key 34) facing the valve, install the travel indicator disk on the valve stem. (Note: The travel indicator disk is not used with size 87 actuators.)
3. Lift or hoist the actuator onto the valve bonnet:

   a. **For size 87 actuators:** Slowly lower the actuator down onto the valve while guiding the valve stem into the opening in the end of the actuator stem (see figure 4). Once the actuator is in place, insert the cap screws and tighten the hex nuts, securing the actuator to the bonnet.

   b. **For all other size actuators:**

- Slowly lower the actuator down onto the valve. As the yoke passes over the end of the valve stem, place the yoke locknut over the valve stem. (Note: On small size actuators, it may be necessary to remove the indicator disk and re-install it while lowering the actuator onto the valve because the disk will not go through the actuator yoke opening).
- Continue to lower the actuator while guiding the valve stem into the opening in the end of the actuator stem until the actuator is in place (see figure 4).
- Screw the yoke locknut onto the valve bonnet and tighten the locknut.

4. Do not connect the actuator stem to the valve stem at this time. Whenever the actuator is installed on the valve, it is recommended that you perform the Bench Set Spring Adjustment procedures below, to verify that the actuator is still adjusted correctly.

Figure 3. Actuator-Mounting Components for Size 30 through 70 Actuators

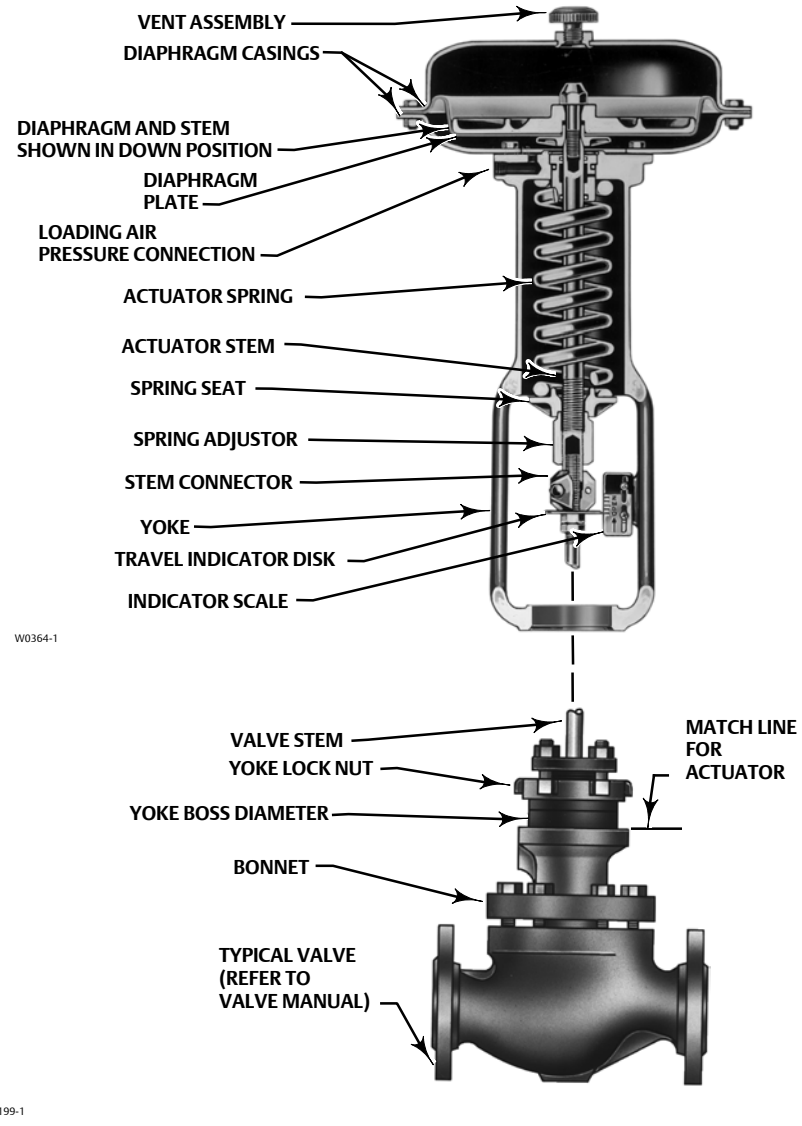

Discussion of Bench Set

The bench set pressure values are used to adjust the initial compression of the actuator spring with the valve-actuator assembly “on the bench.” The correct initial compression ensures that the valve-actuator assembly will function properly when it is put into service and the proper actuator diaphragm operating pressure is applied.

The bench set values are established with the assumption that there is no packing friction. When attempting to adjust the spring in the field, it is very difficult to ensure that there is no friction being applied by “loose” packing.

Accurate adjustment to the bench set range can be made during the actuator mounting process by making the adjustment before the actuator is connected to the valve (see the Spring Verification Procedure).

Figure 4. Bench Set Adjustment

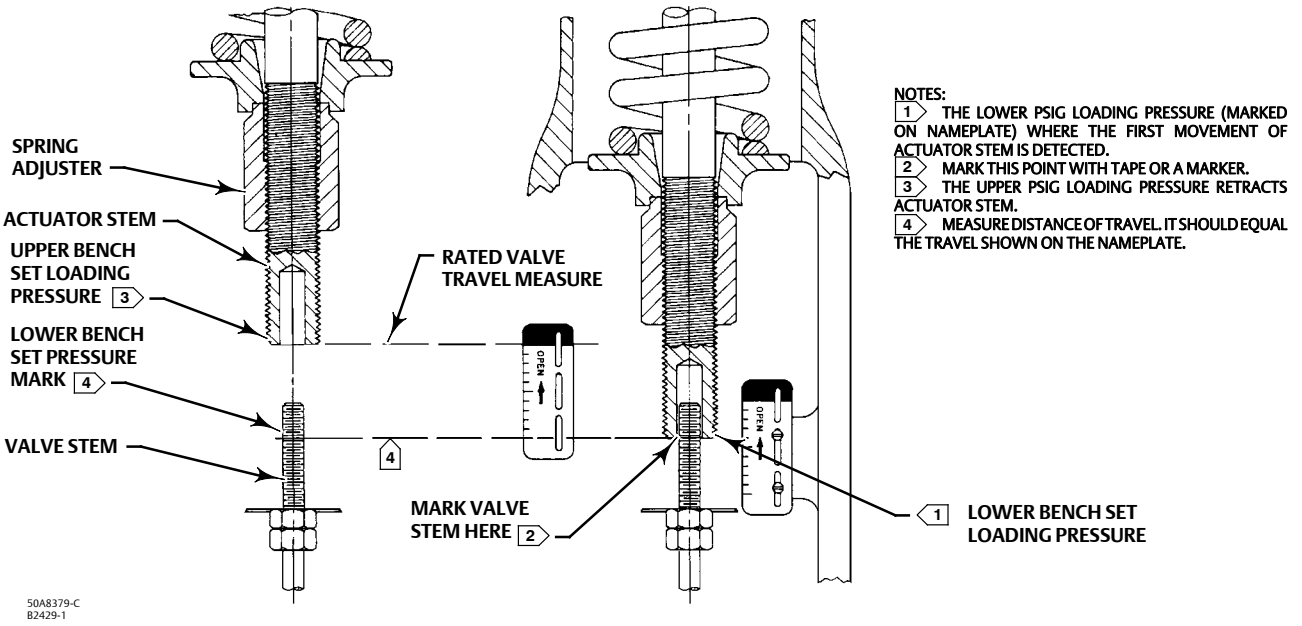

Spring Verification

Ensure that the actuator diaphragm is at the bottom of its travel as shown in figure 4 and not connected to the valve. (Note: Some spring compression is required to move the diaphragm to the **bottom** of its travel.)

Also, provide a certified pressure gauge that will accurately read the diaphragm pressure from 0 through 0.3 bar (5 psig) above the upper operating range pressure marked on the nameplate. Apply loading pressure to the diaphragm.

Stroke the actuator a few times to ensure that the pressure gauge is working correctly, and that the actuator is functioning properly.

CAUTION

To prevent actuator damage, it is important to ensure that the actuator stem is stroking smoothly and not exhibiting binding or excessive friction between the actuator stem and the bushing (key 7). Binding or excessive friction could be an indicator of incorrect assembly or damaged parts.

Key numbers are shown in figures 6, 7, and 8.

Note

For 667 actuators installed on push-down-to-close (direct acting) valves with fail-close action, the valve plug seat is the limit for downward travel and the actuator is the limit for upward (away from the valve) movement.

For 667 actuators installed on push-down-to-open (reverse acting) valves with fail-open action, the actuator down stop is the limit for downward movement, and the valve seat is the limit for upward (away from the valve) movement.

Ensure the correct Spring Verification procedure is followed for the type of valve on which the 667 actuator is installed.

For Push Down to Close (Direct Acting) Valves

1. If not already accomplished, push the valve stem down away from the actuator to the closed position.
2. Set the diaphragm loading pressure to 0.3 bar (5 psig) over the upper operating range pressure. The travel stop cap screw (key 12) should be contacting the upper diaphragm casing.
3. Slowly decrease the pressure towards the upper bench set pressure, as indicated on the nameplate, while checking for the **first** linear movement of the actuator stem.

Note

Before turning the spring adjuster on size 70, 76, or 87 actuators, assemble the stem connector around the actuator stem and the anti-rotating lug on the yoke. Mark the actuator stem as a visual reference to verify that stem rotation does not occur. Remove the stem connector before rechecking the bench set.

4. If movement occurs before or after the upper bench set pressure is reached, adjust the spring adjuster (see figure 4). Thread the adjuster up or down on the actuator stem until the actuator stem movement is **first** detected at the upper bench set pressure. (Note: You may need to lower the loading pressure to reduce spring compression, allowing the spring adjuster to turn.)
5. Be sure the spring adjuster is adjusted to meet the requirements of step 4 above.
6. Slowly decrease diaphragm loading pressure to the lower bench set pressure, as indicated on the nameplate. This will extend the actuator stem toward the valve. Mark the end of the actuator stem on a nearby surface using tape or some other method.
7. Slowly increase the diaphragm loading pressure until the upper bench set pressure is reached. Again, the travel stop cap screw (key 12) should be against the upper diaphragm casing.
8. Measure the distance between the mark or tape to the end of the actuator stem. This distance should match the rated travel indicated on the nameplate.
9. If the measured travel matches the nameplate travel, bench set is complete. Proceed to the Installing the Stem Connector Assembly subsection.
10. If the measured travel is not exact, consider the spring free-length and spring rate tolerances may produce a slightly different bench set than specified. Contact your Emerson Process Management sales office for assistance.

For Push Down to Open (Reverse Acting) Valves

1. If not already accomplished, push the valve stem down away from the actuator to the open position. Later, when installing the connector, pull up the valve stem to the closed position.
2. Set the diaphragm loading pressure to a value less than the lower bench set pressure, as indicated on the nameplate, or near zero. The down travel stops (key 77) should be contacting the yoke.
3. Slowly increase the pressure towards the lower bench set pressure while checking for the **first** linear movement of the actuator stem.

Note

Before turning the spring adjuster on size 70, 76, or 87 actuators, assemble the stem connector around the actuator stem and the anti-rotating lug on the yoke. Mark the actuator stem as a visual reference to verify that stem rotation does not occur. Remove the stem connector before rechecking the bench set.

4. If movement occurs before or after the lower pressure is reached, adjust the spring adjuster (see figure 4). Thread the adjuster up or down on the actuator stem until the actuator stem movement is **first** detected at the lower bench set pressure.
5. Apply the upper bench set pressure indicated on the nameplate to the diaphragm. This will retract the actuator stem away from the valve. Mark the end of the actuator stem on a nearby surface using tape or some other method.
6. Slowly decrease the diaphragm pressure until the lower bench set pressure is applied. Again, the down travel stops (key 77) should be against the yoke.
7. Measure the distance between the mark or tape to the end of the actuator stem. This distance should match the rated travel indicated on the nameplate.
8. If the measured travel matches the nameplate travel, bench set is complete. Proceed to the Installing the Stem Connector Assembly subsection.
9. If the measured travel is not exact, consider the spring free-length and spring rate tolerances may produce a slightly different bench set than specified. Contact your Emerson Process Management sales office for assistance.

Installing the Stem Connector Assembly

When installing the stem connector assembly (key 31), the actuator and valve stem threads should engage the threads of the stem connector by a distance equal to the diameter of the stem.

⚠ WARNING

Install the stem connector securely before a positioner is mounted to the actuator and pressurized, using only a regulator-controlled air supply, not the positioner, to move the actuator stem.

To avoid personal injury or property damage, keep hands and tools out of the actuator stem travel path while applying loading pressure to move the actuator stem in the following steps.

CAUTION

To avoid damaging the seating surfaces, do not rotate the valve plug while it is seated. Exercise care while installing the stem connector assembly to avoid damage to the valve plug stem and valve stem threads.

Note

Replacement stem connectors are an assembly of two stem connector halves, cap screws, and a spacer between the connector halves. Remove the spacer and discard it, if present, before clamping the actuator and valve stems together. Use only a mated pair of stem connectors.

1. If necessary, push the valve stem down so that the valve plug is touching the seat ring on direct-acting valves. For reverse-acting valves, pull the stem up to the closed position. Always start with the valve plug on the seat.
2. If necessary, screw the valve stem locknuts down, away from the connector location. For all actuators except size 87, ensure that the travel indicator disk (key 34) is on top of the locknuts.
3. Adjust the diaphragm pressure to the lower bench set pressure (or, the upper bench set pressure for reverse-acting valves.) This should be the same pressure used in the Spring Verification steps, and it is marked on the nameplate.
4. Place the stem connector half with the threaded holes approximately half way between the actuator and valve stems, and align the actuator stem and valve stem with threads from both stems mated root-to-crest with the stem connector. If the threads from one of the stems do not fully align with the stem connector, a slight change to

loading pressure may be necessary to align the threads. Refer to figures 6, 7, and 8 to help locate the connector position.

CAUTION

Incomplete engagement of either the valve stem or actuator stem in the stem connector can result in stripped threads or improper operation. Be sure that the length of each stem clamped in the stem connector is equal to or greater than one diameter of that stem. Damage to threads on either stem or in the stem connector can cause the parts to be replaced prematurely. Do not loosen the cap screws when the stem connector has spring or loading pressure force applied.

5. Install the other half of the stem connector and insert the cap screws and tighten them while ensuring even spacing between the stem connector halves on all sides. If installing a positioner, also attach the feedback bracket at the same time.

CAUTION

Over-tightening the valve stem locknuts can make disassembly difficult.

6. Screw the valve stem locknuts up against the stem connector for the size 87 actuator. For all other actuator sizes, screw the valve stem locknuts up until the indicator disk contacts the bottom of the stem connector. Do not overtighten the locknuts.
7. Slowly stroke the valve from fully open to fully closed and verify full rated travel is achieved.

Be sure that the valve is in the closed position. Loosen the screws on the travel indicator scale (key 32), and align it with the travel indicator disk (key 34). Stroke the valve full travel to ensure that the travel matches the rated valve travel on the nameplate. If valve travel is not correct, repeat the stem connector procedure.

Friction Discussion

If you are attempting to adjust the bench set after the actuator is connected to the valve and the packing tightened, you must take friction into account. Make the spring adjustment so full actuator travel occurs at the bench set values (a) plus the friction force divided by the effective diaphragm area with increasing diaphragm pressure or (b) minus the friction force divided by the effective diaphragm area with decreasing diaphragm pressure.

If the stem connector assembly has been installed, the valve friction may be determined by the following procedure:

1. Install a pressure gauge in the actuator loading pressure line that connects to the actuator diaphragm casing.

Note

Steps 2 and 4 require that you read and record the pressure shown on the pressure gauge.

2. Increase the actuator diaphragm pressure and read the diaphragm pressure as the actuator reaches a travel position in the rated travel of the valve that does not contact a travel stop. Make a reference mark on the travel indicator scale using tape or some other method at this point.
3. Increase the actuator diaphragm pressure until the actuator is at a travel position greater than the position referenced in step 2 using the reference point to identify first movement.

4. Decrease the actuator diaphragm pressure and read the diaphragm pressure as the actuator returns to the position referenced in step 2.

The difference between the two diaphragm pressure readings is the change in the diaphragm pressure required to overcome the friction forces in the two directions of travel.

5. Calculate the actual friction force:

$$\text{Friction Force, = pounds} \quad 0.5 \left(\text{Difference in pressure readings, psig} \right) \times \left(\text{Effective diaphragm area, inches}^2 \right)$$

Refer to table 1 for the effective diaphragm area.

It is difficult to rotate the spring adjustor (key 74, figures 6, 7, and 8) when the full actuator loading pressure is applied to the actuator. Release the actuator loading pressure before adjusting. Then re-apply loading pressure to check the adjustment.

Figure 5. Typical Valve Response to Deadband

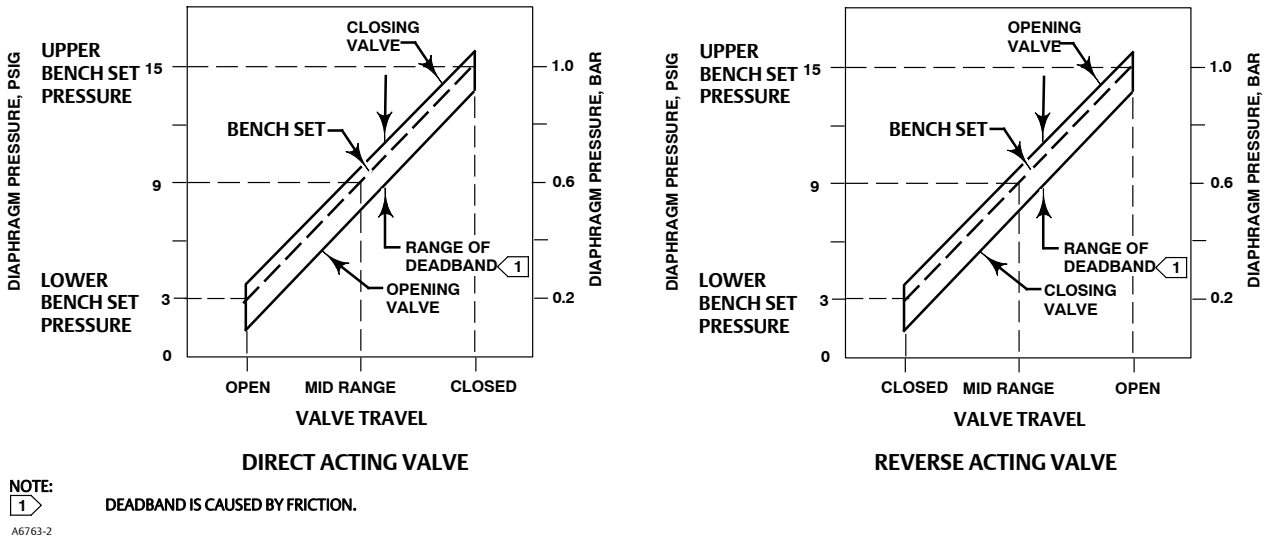

Deadband Measurement

Deadband is caused by packing friction, unbalanced forces, and other factors in the control valve assembly. Deadband is the range a measured signal can vary without initiating a response from the actuator (see figure 5). Each actuator spring has a fixed spring rate (force divided by compression). You have verified that the right spring was installed in the actuator by completing the Spring Verification steps.

Deadband is one factor that affects the control valve assembly operation during automatic loop control. The control loop tolerance for deadband varies widely depending on the loop response. Some common symptoms of the deadband being too wide are no movement, a “jump” movement, or oscillating movements of the actuator during automatic loop control. The following steps are provided to determine the span of deadband. The percent of deadband is helpful in troubleshooting problems with the process control loop.

1. Start at a pressure near the lower bench set pressure, slowly increase pressure until the valve is approximately at mid-travel. Note this pressure reading.

2. Slowly decrease pressure until movement of the valve stem is detected, and note this pressure.
3. The difference between these two pressures is deadband, in psi.
4. Calculate the percent of deadband by:

Deadband, psi

$$\text{Deadband} = \frac{\text{Deadband, psi}}{\text{Bench Set Span, psi}} = \text{nn \%}$$

Loading Connection

Key number locations are shown in figures 6, 7, and 8, unless otherwise noted.

The loading pressure connections are made at the factory if the valve, actuator, and positioner come as a unit. Keep the length of tubing or piping as short as possible to avoid transmission lag in the control signal. If a volume booster, valve positioner, or other accessory is used, be sure that it is properly connected to the actuator. Refer to the positioner instruction manual or other manuals as necessary. For actuators shipped separately or whenever the actuator pressure connections are installed, use the following steps:

1. Connect the loading pressure piping to the NPT internal connection in the side of the yoke (key 73).
2. For size 70 and 87 actuators, if necessary, remove the 1/4 NPT bushing if a 1/2 NPT internal connection is needed to increase connection size. The connection can be made with either piping or tubing.
3. Cycle the actuator several times to be sure that the valve stem travel is correct when the correct pressure ranges are applied to the diaphragm.
4. If valve stem travel appears to be incorrect, refer to the Bench Set Spring Adjustment procedures at the beginning of this section. Do not place the valve in service if it is not reacting correctly to diaphragm loading pressure changes.

Maintenance

Actuator parts are subject to normal wear and must be inspected regularly and replaced when necessary. The frequency of inspection and replacement depends on the severity of service conditions.

⚠ WARNING

Avoid personal injury or property damage from sudden release of process pressure or uncontrolled movement of parts. Before performing any maintenance operations:

- **Do not remove the actuator from the valve while the valve is still pressurized.**
- **Always wear protective gloves, clothing, and eyewear when performing any maintenance operations to avoid personal injury.**
- **Disconnect any operating lines providing air pressure, electric power, or a control signal to the actuator. Be sure the actuator cannot suddenly open or close the valve.**
- **Use bypass valves or completely shut off the process to isolate the valve from process pressure. Relieve process pressure from both sides of the valve. Drain the process media from both sides of the valve.**
- **Vent the power actuator loading pressure and relieve any actuator spring pre-compression.**
- **Use lock-out procedures to be sure that the above measures stay in effect while you work on the equipment.**
- **The valve packing box may contain process fluids that are pressurized, *even when the valve has been removed from the pipeline.* Process fluids may spray out under pressure when removing the packing hardware or packing rings, or when loosening the packing box pipe plug.**

- **Check with your process or safety engineer for any additional measures that must be taken to protect against process media.**

The maintenance instructions are divided into several sections: Actuator, Top-Mounted Handwheel Assembly (Adjustable Down Travel Stop), Side-Mounted Handwheel Assembly for Size 34 through 60 Actuators (Manual Actuator), Side-Mounted Handwheel Assembly for Size 70, 76 and 87 Actuators (Manual Actuator), and Casing-Mounted Travel Stops.

Actuator

This procedure describes how the actuator can be completely disassembled and assembled. When inspection or repairs are required, disassemble only those parts necessary to accomplish the job; then, start the assembly at the appropriate step.

Key numbers are shown in figures 6, 7, or 8, unless otherwise noted. Figure 6 shows the size 30 through 60 actuators, figure 7 shows the size 70 actuator, and figure 8 shows the size 87 actuator.

Actuator Disassembly

Isolate the control valve from the line pressure, release pressure from both sides of the valve body, and drain the process media from both sides of the valve. Also shut off all pressure lines to the power actuator, release all pressure from the actuator. Use lock-out procedures to be sure that the above measures stay in effect while you work on the equipment.

1. Remove the tubing or piping from the connection in the top of the yoke (key 73).
2. Turn the spring adjuster (key 74) counterclockwise **(toward the valve body)** until all spring compression is relieved.

⚠ WARNING

To avoid personal injury due to the sudden uncontrolled movement of parts, do not loosen the stem connector cap screws when the stem connector has spring force applied to it.

3. If necessary, remove the actuator from the valve body by separating the stem connector (key 31). Loosen the stem locknuts for the size 87 actuator, and remove the stem connector nuts. For all other sizes, separate the stem connector by loosening the stem locknuts (keys 69 and 75) and unscrewing the two stem connector cap screws.
4. Unscrew the spring adjuster (key 74) from the actuator stem (key 144). Also lift the spring seat and spring (key 19 and 18) out of the yoke.
5. Remove the diaphragm casing cap screws and nuts (keys 13 and 14), and lift off the upper diaphragm casing (key 1).

CAUTION

Be careful during disassembly to avoid damaging the O-rings (key 8).

6. Remove the following connected parts: the diaphragm (key 3), upper diaphragm plate (key 4), spacer (key 2), cap screw (key 12), lower diaphragm plate (key 71), and actuator stem (key 144). Be careful when pulling the threads of the actuator stem through the seal bushing (key 7) to avoid damaging the O-rings (key 8).

7. Remove the cap screw (key 12) to separate the parts of this assembly.
8. To remove the seal bushing, remove the snap ring (key 72), and lift out the bushing. Inspect, and if necessary, replace O-rings (keys 8 and 9).
9. Remove cap screws (key 30), and take off the lower diaphragm casing (key 64) and the gasket (key 70, size 30 through 60 and 76) or O-ring (key 70, size 70 or 87). If necessary, the down travel stops (key 77) can be removed.

Table 2. Actuator Assembly Recommended Torque Values

DESCRIPTION, KEY NUMBER	ACTUATOR SIZE	THREAD SIZE, INCH	TORQUE	
			N • m	Lbf • ft
Casing to yoke, key 30(1)	30 to 60 and 76	3/8-16	41	30
	70 and 87	1/2-13	95	70
Travel stop, key 12	30	3/8-24	41	30
	34 and 40	1/2-20	68	50
	45 to 76 and 87	3/4-16	183	135
MO U-bolt nut, key 170	34 and 40	1/2-13	81	60
	45 to 60	5/8-11	163	120
MO U-bolt nut, key 147	34 and 40	3/8-16	41	30
MO U-bolt nut, key 144	45 to 60	3/8-16	41	30
Diaphragm casing, key 14(1)	30 to 76 and 87	3/8-24	27	20

1. Observe tightening pattern and procedure described in the appropriate Actuator Assembly section.

Actuator Assembly

Refer to table 2 as appropriate.

1. Coat the O-rings (key 70, sizes 70 and 87) with lithium grease (key 237), or, coat the gasket with lithium grease (key 237). Place a new gasket or O-ring (key 70) on the yoke (key 73). Position the lower diaphragm casing (key 64) on the yoke and align the holes. Insert the cap screws (key 30) and tighten evenly in a crisscross pattern to 41 N•m (30 lbf•ft) for size 30-60 and 76 actuators or 95 N•m (70 lbf•ft) for size 70 and 87 actuators. If down travel stops (key 77) were removed, insert and tighten them.
2. Coat the O-rings (keys 8 and 9) with lithium grease (key 237) and place the O-rings in the seal bushing (key 7).
3. Fill the seal bushing with lithium grease (key 237), slide the bushing into the yoke (key 73), and install the snap ring (key 72).

CAUTION

Be careful during assembly to avoid damaging the O-rings (key 8).

4. Assemble the actuator stem (key 144), lower diaphragm plate (key 71), diaphragm (key 3), upper diaphragm plate (key 4), and the travel stop cap screw and spacer (keys 12 and 2). Coat the cap screw threads with lithium grease (key 237). Tighten the cap screw (key 12) to the appropriate torque as shown in table 2. Place this assembly in the actuator. Take care when pushing the actuator stem through the seal bushing so that the threads do not damage the O-rings.

Note

When you replace actuator diaphragms in the field, take care to ensure the diaphragm casing bolts are tightened to the proper load to prevent leakage, but not crush the material. Perform the following tightening sequence with a manual torque wrench for size 30-76 and 87 actuators.

CAUTION

Over-tightening the diaphragm cap screws and nuts (keys 13 and 14) can damage the diaphragm. Do not exceed 27 N•m (20 lbf•ft) torque.

Note
Do not use lubricant on these bolts and nuts. Fasteners must be clean and dry.

5. Install the upper diaphragm casing (key 1), and install the cap screws and nuts (keys 13 and 14). Tighten the diaphragm cap screws and nuts in the following manner.
6. The first four bolts tightened should be diametrically opposed and 90 degrees apart. Tighten these four bolts to 13 N•m (10 lbf•ft).
7. Tighten the remaining bolts in a clockwise, criss-cross pattern to 13 N•m (10 lbf•ft).
8. Repeat this procedure by tightening four bolts, diametrically opposed and 90 degrees apart, to a torque of 27 N•m (20 lbf•ft).
9. Tighten the remaining bolts in a clockwise, criss-cross pattern to 27 N•m (20 lbf•ft).
10. After the last bolt is tightened to 27 N•m (20 lbf•ft), all of the bolts should be tightened again to 27 N•m (20 lbf•ft) in a circular pattern around the bolt circle.
11. Once completed, no more tightening is recommended.
12. Install the actuator spring (key 18) and spring seat (key 19). Apply anti-seize lubricant (key 239) to the threads of the actuator stem and to the surface of the spring adjuster (key 74) that contacts the spring seat. Thread the spring adjuster onto the actuator stem.
13. Mount the actuator onto the valve in accordance with the procedures in the Installation section.

Top-Mounted Handwheel Assembly (Adjustable Down Travel Stop)

Actuator key numbers are shown in figures 6, 7, and 8. And, top-mounted handwheels are shown in figures 9, 11, 12, and 13.

Note
If repeated or daily manual operation is expected, the actuator should be equipped with a side-mounted handwheel rather than a casing-mounted travel stop or top-mounted handwheel. The side-mounted handwheel is designed for more frequent use as a manual operator.

A top-mounted handwheel assembly (figures 9, 11, 12, and 13) is usually used as an adjustable down travel stop to limit full extension of the actuator stem. Turning the handwheel counterclockwise pulls the extension rod (key 150, figures 9, 11, and 12) up, retracting the actuator stem.

Instructions are given below for complete disassembly and assembly. Perform the disassembly only as far as necessary to accomplish the required maintenance; then, begin the assembly at the appropriate step.

Note
For size 70 and 87 actuators with handjack bars (figure 13) it is recommended that the handjack bar (key 58) be removed when not in use and the handwheel cap (key 247) be installed for weather protection of the internal components.

Disassembly for Top-Mounted Handwheel

1. Bypass the control valve, reduce loading pressure to atmospheric, and remove the tubing or piping from the connection in the top of the yoke (key 73, figures 6, 7, and 8).
2. Turn the handwheel (key 58) clockwise so that the handwheel assembly is not causing any spring compression.
3. Turn the actuator spring adjuster (key 74) to relieve all the compression from the spring (key 18).
4. If servicing just the thrust bearing, races, and handwheel screw (keys 180, 181, and 160), use the following steps:

- Remove the cap and take out the cotter pin. Remove the castle nut, bearing retainer, thrust bearing, and races (keys 247, 167, 166, 180, and 181).
- Use the handwheel to remove the handwheel screw (key 160) from the handwheel body (key 148).
- If necessary, remove the extension rod (key 150) at this time. Most maintenance procedures do not require the rod to be removed.
- Clean and inspect all parts or replace parts as necessary. Upon re-assembly, lubricate handwheel threads, bearings, and races with anti-seize lubricant (key 239).
- Lubricate and re-install the handwheel screw into handwheel body (key 148). Lubricate and replace the races, bearing, and retainer (keys 181, 180, and 182). Replace the castle nut (key 166), tighten it, and insert the cotter pin (key 167). Replace the handwheel cap (key 247).

5. **For size 30 through 60 and 76 actuator handwheels (figures 9 and 11):**

- Remove the cap screws (key 161). Make sure that the guide plate can turn between the handwheel body and the mounting plate (keys 157, 148 and 158).
- Remove the cap (key 247) and cotter pin (key 167). Remove the castle nut (key 166) and, if necessary, unscrew the extension rod (key 150). Remove the rod, the handwheel body (key 148), and the attached parts.
- Remove the hex nuts and cap screws (keys 14 and 13, figures 6, 7, and 8) from the diaphragm casings. Lift off the upper diaphragm casing (key 1) and the mounting plate (key 158).
- Turn the handwheel (key 58) to remove the handwheel screw (key 160) from the handwheel body (key 148). Remove the retaining ring (key 60) if the handwheel (key 58) must be separated from the handwheel screw.
- If necessary, perform other actuator maintenance before returning to the following assembly steps.

6. **For size 70 and 87 actuator handwheels (figures 12 and 13):**

- Remove the cap (key 247). Take out the cotter pin (key 167) and remove the castle nut, the bearing retainer, and thrust bearing (keys 166, 182, 181, and 180). It is not necessary to remove the extension rod (key 150) at this time.
- Remove the hex nuts and cap screws (keys 14 and 13, figures 6, 7, and 8) from the diaphragm casings. Lift off the upper diaphragm casing (key 1), handwheel body (key 148) and attached parts.
- If travel stops (key 152) are used, note and record their position relative to the cap screws (key 154) for use in assembly. Remove the travel stops and cap screws, and remove either the mounting plate (key 158, figure 12) or the handwheel body (key 148, figure 12) and attached parts.
- Turn the handwheel (key 58) to remove the handwheel screw (key 160) from the handwheel body (key 148). Remove the retaining ring (key 60) if the handwheel (key 58) must be separated from the handwheel screw.

- If necessary, perform other actuator maintenance before returning to the following assembly steps.

Assembly for Top-Mounted Handwheel

For size 30 through 60 and 76 actuator handwheels:

Refer to figures 9 and 11 for top-mounted handwheel assemblies.

1. If it was removed, slide the handwheel (key 58) onto the end of the handwheel screw (key 160), and snap the retaining ring (key 60) into place. Also, install the guide post (key 150) if it was removed.
2. Generously coat the threads of the handwheel screw (key 160) with anti-seize lubricant (key 239). Turn the screw into the handwheel body (key 148).
3. Install the mounting plate (key 158) to the diaphragm casing (key 1, figures 6, 7, and 8) with the cap screws (key 154). Finger tighten the screws.
4. If travel stops were used, install the travel stops to their original positions as recorded in the proceeding Disassembly steps. Tighten the screws and travel stops.

Note

When you replace actuator diaphragms in the field, take care to ensure the diaphragm casing bolts are tightened to the proper load to prevent leakage, but not crush the material. Perform the following tightening sequence with a manual torque wrench for size 30-76 and 87 actuators.

CAUTION

Over-tightening the diaphragm cap screws and nuts (keys 13 and 14) can damage the diaphragm. Do not exceed 27 N•m (20 lbf•ft) torque.

Note

Do not use lubricant on these bolts and nuts. Fasteners must be clean and dry.

5. Position the diaphragm casing (key 1, figures 6, 7, and 8), mounting plate (key 158), travel stops (key 152), if used, and cap screws (key 154) on the diaphragm. Install the cap screws and hex nuts (keys 13 and 14, figures 6, 7, and 8) and tighten in the following manner.
6. The first four bolts tightened should be diametrically opposed and 90 degrees apart. Tighten these four bolts to 13 N•m (10 lbf•ft).
7. Tighten the remaining bolts in a clockwise, criss-cross pattern to 13 N•m (10 lbf•ft).
8. Repeat this procedure by tightening four bolts, diametrically opposed and 90 degrees apart, to a torque of 27 N•m (20 lbf•ft).
9. Tighten the remaining bolts in a clockwise, criss-cross pattern to 27 N•m (20 lbf•ft).
10. After the last bolt is tightened to 27 N•m (20 lbf•ft), all of the bolts should be tightened again to 27 N•m (20 lbf•ft) in a circular pattern around the bolt circle.
11. Once completed, no more tightening is recommended.
12. If necessary, screw the extension rod (key 150 into the connector (key 27). Slide the guide plate (key 157) onto the extension rod (key 150). For size 45 through 76, place the spacer (key 253) on top of the guide plate (key 157). If

necessary, replace the extension rod (key 150). Slide the handwheel body (key 148) over the extension rod, position the handwheel body on the spacer (key 253), align the holes, and insert and tighten the cap screws (key 161).

13. Lubricate and install the thrust bearings (keys 181 and 180), install the bearing retainer (key 182), install the castle nut (key 166) on the extension rod. Do not overtighten the castle nut on the bearing. Install the cotter pin (key 167). Replace the cap (key 247).
14. Refer to the Assembly portion of the Actuator maintenance section.

For size 70 and 87 actuators handwheels (figures 12 and 13):

Refer to figure 12 for top-mounted handwheel assemblies and figure 13 for handjack bar assemblies.

1. If removed, slide the handwheel (key 58) onto the end of the handwheel screw (key 160), and snap the retaining ring (key 60) into place.
2. Generously coat the threads of the handwheel screw (key 160) with anti-seize lubricant (key 239). Turn the screw into the handwheel body (key 148).
3. If necessary, install the extension rod (key 150) into the connector (key 27) and tighten it. Position the handwheel body (key 148) on the diaphragm casing (key 1, figures 6, 7, and 8), and align the holes. Insert the cap screws (key 154). Finger tighten the screws.
4. If travel stops were used, return the travel stops to their original positions as recorded in the proceeding Disassembly steps. Tighten the screws and travel stops.

Note

When you replace actuator diaphragms in the field, take care to ensure the diaphragm casing bolts are tightened to the proper load to prevent leakage, but not crush the material. Perform the following tightening sequence with a manual torque wrench for size 30-76 and 87 actuators.

CAUTION

Over-tightening the diaphragm cap screws and nuts (keys 13 and 14) can damage the diaphragm. Do not exceed 27 N•m (20 lbf•ft) torque.

Note

Do not use lubricant on these bolts and nuts. Fasteners must be clean and dry.

5. Slide the extension rod (key 150) into the handwheel screw (key 160), and position the diaphragm casing (key 1, figures 6, 7, and 8) with the attached parts on the diaphragm. Install the cap screws and hex nuts (keys 13 and 14, figures 6, 7, and 8) and tighten in the following manner.
6. The first four bolts tightened should be diametrically opposed and 90 degrees apart. Tighten these four bolts to 13 N•m (10 lbf•ft).
7. Tighten the remaining bolts in a clockwise, criss-cross pattern to 13 N•m (10 lbf•ft).
8. Repeat this procedure by tightening four bolts, diametrically opposed and 90 degrees apart, to a torque of 27 N•m (20 lbf•ft).
9. Tighten the remaining bolts in a clockwise, criss-cross pattern to 27 N•m (20 lbf•ft).
10. After the last bolt is tightened to 27 N•m (20 lbf•ft), all of the bolts should be tightened again to 27 N•m (20 lbf•ft) in a circular pattern around the bolt circle.

11. Once completed, no more tightening is recommended.
12. Lubricate and install the thrust bearings (keys 180 and 181), install the bearing retainer (key 182), install the castle nut (keys 166) on the extension rod. Do not overtighten the castle nut on the bearing. Install the cotter pin (key 167). Replace the cap (key 247).
13. Refer to the Assembly portion of the Actuator maintenance section.

Side-Mounted Handwheel Assembly for Size 34 through 60 Actuators

A side-mounted handwheel assembly (figures 14 and 15) is usually used as a manual actuator. This design is frequently used to drive the valve open or closed under loading conditions. Turning the handwheel clockwise past the neutral position always closes a push-down-to-close valve. A pair of levers (key 146, figure 14) on a handwheel assembly close the valve by moving the valve stem.

Instructions are given below for disassembly and assembly. Perform the disassembly only as far as necessary to accomplish the required maintenance; then begin the assembly at the appropriate step.

Disassembly for Side-Mounted Handwheel (34-60)

1. If desired, the handwheel assembly can be removed from the actuator yoke. To do this, remove the nuts (keys 147 and 170) from the U-bolts and J-bolts (keys 166 and 143) that hold the assembly to the yoke for the size 34 and 40 actuators. Remove the nuts (keys 170 and 144) from the U-bolts (keys 166 and 143) that hold the assembly to the yoke for the size 45 through size 60 actuators.
2. Remove the retaining ring (key 154), and drive out the lever pivot pin (key 153).
3. Two screws (key 156) hold the right- and left-hand levers (key 146) together. Remove the screw from the top of the levers so that the levers will drop down out of the assembly. Disassemble further, if necessary, by removing the other screw.
4. Remove the screw (key 161) and pointer mounting bolt (key 159, not shown) located behind the pointer (key 160).
5. Remove the nut (key 54), lockwasher (key 150), and washer (key 149), and take off the handwheel (key 51). Be careful not to lose the small ball (key 55) and spring (key 56).
6. Unscrew the bearing retainer (key 136) after loosening the locking set screw (key 168, not shown for the size 34 and 40 actuators).
7. Pull the screw assembly (key 145) out of the handwheel body. The operating nut (key 132) will come out with the screw. Also, remove the bushing (key 151) on sizes 34 and 40.
8. If required, remove the bearings (key 152), one from the bearing retainer and the other from the handwheel body.

Assembly for Side-Mounted Handwheel (Sizes 34-60)

1. Pack the bearings (key 152) with anti-seize lubricant (key 244). Insert one bearing and the bushing (key 151) in the handwheel body (key 142) as shown in figure 14 or 15. The bushing is not used in a handwheel assembly for size 45 through 60 actuators.
2. Coat the screw threads with anti-seize lubricant (key 244), and thread the operating nut onto the screw. Slide the second bearing (key 152) onto the screw, and insert the end of the screw into either the bushing (key 151) as shown in figure 14 or 15 or into the bearing.
3. Thread the bearing retainer (key 136) into the body (key 142). Completely tighten the bearing retainer, and then loosen it one-quarter turn. Tighten the set screw (key 168, not shown for the size 34 and 40 actuators) to hold the bearing retainer in place.
4. Coat the groove in the handwheel body (key 142) with lithium grease (key 241). Insert the spring (key 56) and ball (key 55) into the handwheel (key 51). Holding the ball and spring in the handwheel, put the handwheel (key 51), the washer (key 149), the lockwasher (key 150), and the hex nut (key 54) on the end of the screw (key 145). Tighten the hex nut.

5. Position the pointer mounting bolt (key 159, not shown) and the pointer (key 160) as shown in figure 14 or 15. Insert and tighten the screw (key 161).
6. Assemble the two levers (key 146) with the cap screws (key 156) for handwheel assemblies for size 45, 50, and 60 actuators or with the machine bolts (key 156) for handwheel assemblies on size 34 and 40 actuators.
7. If the handwheel assembly was removed from the yoke, remount the handjack assembly to the yoke using the dowel pins for alignment. For the size 34 and size 40 actuators, position the U-bolts and J-Bolts (keys 166 and 143) on the yoke, and hand-tighten the hex nuts (keys 170 and 147) to hold the handwheel assembly in position. For the size 45 through size 60 actuators, position the U-bolts (keys 166 and 143) on the yoke, and hand-tighten the hex nuts (keys 170 and 144) to hold the handwheel assembly in position. Tighten the nuts (key 144 for the size 30 and size 40 actuators , key 158 for the size 45 through size 60 actuators). For the size 34 and size 40 actuators, finish tightening the U-bolt nuts to 81 N • m [60 lbf • ft] (key 170) and 41 N • m [30 lbf • ft] (key 147). For the size 45 through size 60 actuators ,finish tightening the U-bolt nuts to 163 N • m [120 lbf • ft] (key 170) and 41 N • m [30 lbf • ft] (key 144). Be sure the handwheel assembly remains flat against the mounting pad and perpendicular to the yoke.
8. Position the levers (key 146) as shown in figure 14 or 15. Insert the lever pivot pin (key 153), and snap the retaining ring (key 154) onto the lever pivot pin.

Side-Mounted Handwheel Assembly for Size 70, 76, and 87 Actuators

A side-mounted handwheel assembly (figure 16) is usually used as a manual actuator. Turning the handwheel clockwise past the neutral position always closes the valve body. A sleeve (key 123, figure 16) on a handwheel assembly for a size 70, 76 or 87 actuator opens the valve body by moving the valve stem.

Instructions are given below for complete disassembly and assembly. Perform the disassembly only as far as necessary to accomplish the required maintenance; and then begin the assembly at the appropriate step.

Disassembly for Side-Mounted Handwheel (Sizes 70, 76, and 87)

1. Bypass the control valve. Reduce the loading pressure to atmospheric. Disconnect the loading pressure tubing or piping at the yoke.
2. Remove the cover band (key 87), and relieve spring compression by turning the spring adjuster (key 74) counterclockwise.
3. Remove the cap screws and nuts (keys 13 and 14) and lift off the upper diaphragm casing (key 1).
4. Remove the travel stop screw (key 12) and spacer (key 2), and take off the diaphragm plate (key 4), the diaphragm (key 3), and the lower diaphragm plate (key 71).
5. Unscrew the cap screws (key 90) and remove the following connected parts: the lower diaphragm casing (key 64), the O-ring (key 70), spring case adaptor (key 89), the seal bushing, O-rings, and snap ring (keys 7, 8, 9, and 72).
6. Remove the snap ring (key 72), and slide the seal bushing and O-rings (keys 7, 8, and 9) out of the spring case adaptor (key 89).
7. Take out the actuator spring (key 18).
8. Remove the stem connector (key 31) and stem connector cap screws.
9. Pull the actuator stem (key 144) up and out of the yoke. The spring seat (key 19), spring adjuster (key 74), thrust bearing (key 128), and the pinned adjusting screw (key 131) will come out with the actuator stem.
10. Turn the handwheel so that the lower sleeve (key 123) extends out of the bottom of the yoke. DO NOT move the neutral indicator scale (key 125).
11. Loosen two set screws (key 121), and unscrew the bearing retainer flange (key 45). Take out the worm gear and two thrust bearings (key 132), one on each side of the gear.
12. The worm shaft (key 51) and associated parts can be disassembled, if desired, by first removing the handwheel nut (key 127) and the handwheel (key 58). Do not lose the small ball (key 141) and spring (key 142).

13. Loosen the set screw (key 52) for each worm shaft retainer (keys 48 and 49). Unscrew the two worm retainers (keys 48 and 49). The ball bearings (key 50) will come out with the retainers.

Assembly for Side-Mounted Handwheel (Sizes 70, 76, and 87)

1. The front and back worm retainers (keys 48 and 49) each have a slot in their threads for a set screw (key 52). Pack the ball bearings (key 50) with anti-seize lubricant (key 239), and insert one ball bearing in the back worm retainer (key 49) as shown in figure 16.
2. Thread the back bearing retainer and ball bearing (keys 49 and 50) into the yoke. Align the slot in the bearing retainer with the set screw hole in the yoke, insert the set screw (key 52), and tighten it.
3. Coat the worm shaft (key 51) threads with anti-seize lubricant (key 239), and slide the shaft into the yoke so that the end of the shaft fits snugly into the back bearing retainer.
4. Insert the bearing in the front bearing retainer (key 49), and thread the retainer and ball bearing into the yoke. Align the slot in the retainer with the hole in the yoke, insert the set screw (key 52), and tighten it.
5. Put the spring and ball (keys 141 and 142) in the handwheel (key 58). Slide the handwheel onto the worm shaft (key 51). Thread the hex nut (key 127) onto the worm shaft.
6. Pack the two needle bearings (key 132) and coat the worm gear (key 44) threads with anti-seize lubricant (key 239). Insert the key (key 122), the bearings, and the worm gear in the yoke (key 73) as shown in figure 16.
7. Slots are cut in the threads of the bearing retainer flange (key 45). Thread the flange into the yoke so that the slots and the holes for the set screws (key 121) align. Insert the screws, and tighten them.
8. The lower sleeve (key 123) has a milled groove in one end. Coat the sleeve threads with anti-seize lubricant (key 239), slide the end of the lower sleeve with the groove into the bearing retainer flange, turn the handwheel, and feed the sleeve through the worm gear so that the slot in the lower sleeve engages the key (key 122) in the yoke. Continue turning the handwheel until the lower sleeve protrudes 81 mm (3.19 inches) below the surface of the yoke. The bottom of the lower sleeve should be even with the bottom of the extension on the neutral indicator.
9. Pack the thrust bearing (key 128) with anti-seize lubricant (key 239). Slide the actuator stem (key 144) and the attached adjusting screw (key 131), pin (key 130), thrust bearing (key 128), spring seat (key 19), and spring adjuster (key 74) into the yoke. The lower end of the stem slides through the lower sleeve (key 123) and the lower sleeve slides into the adjusting screw (key 131), as shown in figure 16.
10. Position the actuator stem (key 144) against the valve stem. Clamp both stems between the two halves of the stem connector (key 31), and be sure the threads are engaged properly on both stems. The stem connector should not be closer than 3.2 mm (1/8 inches) to the lower sleeve when the actuator stem is in the retracted position. This adjustment will provide approximately 3.2 mm (1/8 inches) of free travel of the lower sleeve in either direction for manual operation. Fasten the halves together with the cap screws.
11. Put the actuator spring (key 18) in the yoke on the spring seat (key 19).
12. Coat the O-rings (keys 8 and 9) with lithium grease (key 237), and insert them in the seal bushing (key 7). Slide the seal bushing and O-rings into the spring case adaptor (key 89).
13. Install the snap ring (key 72).
14. Slide the seal bushing and O-rings (keys 7, 8, and 9) over the actuator stem (key 144), and position the spring case adaptor (key 89), lower diaphragm casing (key 64), and O-ring (key 70) on the yoke.
15. Insert and tighten the cap screws (key 90).
16. Slide the lower diaphragm plate (key 71), the diaphragm (key 3) with the patterned side up, the diaphragm plate (key 4), the spacer (key 2), and the cap screw (key 12) on the actuator stem (key 144). Tighten the cap screw.
17. Put the diaphragm casing (key 1) on the diaphragm. Align the holes in the diaphragm (key 3) and the diaphragm casings (keys 1 and 64).

Note

When you replace actuator diaphragms in the field, take care to ensure the diaphragm casing bolts are tightened to the proper load to prevent leakage, but not crush the material. Perform the following tightening sequence with a manual torque wrench for size 30-76 and 87 actuators.

CAUTION

Over-tightening the diaphragm cap screws and nuts (keys 13 and 14) can damage the diaphragm. Do not exceed 27 N•m (20 lbf•ft) torque.

Note

Do not use lubricant on these bolts and nuts. Fasteners must be clean and dry.

18. Install the cap screws and hex nuts (keys 13 and 14) and tighten in the following manner.
19. The first four bolts tightened should be diametrically opposed and 90 degrees apart. Tighten these four bolts to 13 N•m (10 lbf•ft).
20. Tighten the remaining bolts in a clockwise, criss-cross pattern to 13 N•m (10 lbf•ft).
21. Repeat this procedure by tightening four bolts, diametrically opposed and 90 degrees apart, to a torque of 27 N•m (20 lbf•ft).
22. Tighten the remaining bolts in a clockwise, criss-cross pattern to 27 N•m (20 lbf•ft).
23. After the last bolt is tightened to 27 N•m (20 lbf•ft), all of the bolts should be tightened again to 27 N•m (20 lbf•ft) in a circular pattern around the bolt circle.
24. Once completed, no more tightening is recommended.
25. Return the actuator to service after completing the Loading Connection procedure in the Installation section and the procedures in the Adjustments section.

Casing-Mounted Travel Stops

Note

If repeated or daily manual operation is expected, the actuator should be equipped with a side-mounted handwheel rather than a casing-mounted travel stop or top-mounted handwheel. The side-mounted handwheel is designed for more frequent use as manual operator.

Casing-mounted adjustable travel stops (shown in figures 17 through 21) are available to limit travel in the down direction (extending the actuator stem) or in the up direction (retracting the actuator stem). The travel stop in figure 17 is a down travel stop, the travel stop in figure 18 is an up and down travel stop, and the travel stops in figures 19, 20, and 21 are up travel stops.

Use the locknuts (key 151, figures 17 and 18), stem (key 150, figure 19), handwheel (key 58, figure 20) or cap screw (key 177, figure 21) to set the point at which the travel stop limits travel. Be sure to tighten the locknuts and replace the cap (key 149, figures 17 and 19; key 247, figure 18) after setting the travel stop.

Instructions are given below for disassembly and assembly. Perform the disassembly only as far as necessary to accomplish the required maintenance; then, begin the assembly at the appropriate step.

Key numbers are shown in figures 17 through 21.

1. Remove the cap (key 149 or 247) if the travel stop uses one. For down travel stops, loosen the locknuts (key 151, figures 17 and 18) so that the stop is not causing any spring compression.

2. Bypass the control valve, reduce loading pressure to atmospheric, and remove the tubing or piping from the connection on top of the yoke (key 73, figures 6, 7, and 8).
3. For down travel stops, turn the spring adjuster (key 74, figures 6, 7, and 8) out of the yoke toward the stem connector (key 31) to relieve all the compression in the spring (key 18).
4. **For style 11 travel stops (figure 18),** unscrew the cap screws (key 161), and make sure that the guide plate (key 157) can turn between the handwheel body (key 148) and the mounting plate (key 158).
5. Use a wrench on the nuts (key 151) to unscrew the extension rod (key 150). Remove the rod, the handwheel body (key 148), and the attached parts.
6. Unscrew the hex nuts and cap screws (keys 14 and 13, figures 6, 7, and 8) from the diaphragm casings. Lift off the upper diaphragm casing (key 1, figures 6, 7, and 8) and, for the style 11 travel stop, the mounting plate (key 158). For styles 10, 12 and 13, the travel stop assembly will be removed with the casing.
7. Note and record the position of travel stops (key 152) relative to the cap screws (key 154) for use in assembly. Unscrew the travel stops and cap screws, and remove either the mounting plate (key 158) or the handwheel body (key 148) and attached parts.
8. Separate the stem (key 150) and screw (key 160, figure 18) from the handwheel body.
9. Before reassembling, lubricate parts indicated by key 239 in figures 17 through 21. Use anti-seize lubricant (key 239).
10. Reassemble parts in the reverse order of removal.
11. When replacing the cap screws (key 154) and, if used, the travel stops (key 152), be sure to return them to their original position as recorded in step 7.

CAUTION

Over-tightening the diaphragm cap screws and nuts (keys 13 and 14), figures 6, 7, and 8 can damage the diaphragm. Do not exceed 27 N•m (20 lbf•ft) torque.

12. Install the cap screws and nuts (keys 13 and 14, figures 6, 7, and 8) and finger tighten. Tighten the diaphragm cap screws and nuts to 27 N•m (20 lbf•ft) torque in a crisscross pattern.
13. Return the spring adjuster (key 74, figure 6, 7, and 8) to its original position. Re-adjust the travel stop.

Parts Ordering

Each actuator has a serial number stamped on the nameplate. Always mention this number when corresponding with your Emerson Process Management sales office regarding technical information or replacement parts. Also, reference the complete 11-character part number of each needed part as found in the following Parts Kits and Parts List sections.

⚠ WARNING

Use only genuine Fisher replacement parts. Components that are not supplied by Emerson Process Management should not, under any circumstances, be used in any Fisher valve, because they may void your warranty, might adversely affect the performance of the valve, and could cause personal injury and property damage.

Parts Kits

Actuator Repair Kits

Parts kit includes keys 8, 9, and 70. O-ring material is nitrile, and gasket material is composition.

Key	Description	Part Number
	Size 30	R667X000302
	Sizes 34 & 40	R667X000402
	Sizes 45 through 60	R667X000502
	Sizes 70 & 87	R667X000702
	Size 76	R667X000762

Side-Mounted Handwheels Retrofit Kits

Key	Description	Part Number
	Retrofit Kit includes parts to add a Side-Mounted Handwheel.	
	Size 34 Push-Down-To-Close	30A8778X0E2
	Size 34 Push-Down-To-Open	30A8778X0F2
	Size 40 Push-Down-To-Close	30A8778X0G2
	Size 40 Push-Down-To-Open	30A8778X0H2
	Size 45 & 46 Push-Down-To-Close	40A8779X0A2
	Size 45 & 46 Push-Down-To-Open	40A8779X0B2
	Size 50 & 60 Push-Down-To-Close	40A8779X0C2
	Size 50 & 60 Push-Down-To-Open	40A8779X0D2

Top-Mounted Handwheels Retrofit Kits

Retrofit Kit includes parts to add a Top-Mounted Handwheel. Kit number 1 includes the handwheel assembly only. Kit number 2 includes Kit number 1 and a new diaphragm case that is required to mount the handwheel assembly.

Key	Description	Part Number
	Kit 1	
	Size 30	30B3940X102
	Sizes 34	30B3940X022
	Size 40	30B3940X042
	Sizes 45 & 50	33B9224X012
	Sizes 46, 60, & 76	33B9224X012
	Sizes 70 & 87	CV8060X0012
	Kit 2	
	Size 30	30B3940X052
	Size 34	30B3940X062
	Size 40	30B3940X092
	Sizes 45 & 50	33B9224X022
	Sizes 46, 60, & 76	33B9224X032
	Sizes 70 & 87	CV8060X0022

Parts List

Note
Part numbers are shown for recommended spares only. For part numbers not shown, contact your Emerson Process Management sales office.

Actuator Assembly

Key	Description	Part Number	Qty
1	Upper Diaphragm Casing		
2	Travel Stop Spacer		
3*	Diaphragm		
	Molded Nitrile/Nylon		
	Size 30	2E800002202	1
	Sizes 34 & 40	2E669902202	1
	Sizes 45 & 50	2E859602202	1
	Sizes 46, 60 & 76	2E859802202	1
	Sizes 70 & 87	2N130902202	1
	Molded Silicone/Polyester		
	Size 30	18B2713X012	1
	Sizes 34 & 40	18B2713X022	1
	Sizes 45 & 50	18B2713X032	1
	Sizes 46, 60 & 76	18B2713X042	1
	Sizes 70 & 87	18B2713X052	1
4	Upper Diaphragm Plate		
7*	Bushing, Seal		
	Brass		
	Size 30	1E791214012	1
	Sizes 34 & 40	1E682814012	1
	Sizes 45 through 60	1E845714012	1
	Sizes 70, 76 & 87	1N1316X0052	1
	S41600 [416 stainless steel (SST)]		
	Size 30	1E7912X0012	1
	Sizes 34 & 40	1E6828X0012	1
	Sizes 45 through 60	1E8457X0012	1
	PTFE w/25% Glass		
	Sizes 70, 76 & 87	1N1316X0042	1
8*	O-Ring		
	Nitrile		
	Size 30	1E5914X0052	2
	Sizes 34 & 40	1D237506992	2
	Sizes 45 through 60	1C5622X0022	2
	Sizes 70, 76 & 87	1E736906992	2
	Fluorocarbon		
	Size 30	1E5914X0062	2
	Sizes 34 & 40	1D237506382	2
	Sizes 45 through 60	1N285406382	2
	Sizes 70, 76, & 87	1N1633X0012	2
9*	O-Ring		
	Nitrile		
	Sizes 30 through 40	1C415706992	1
	Sizes 45 through 87	1E845806992	1
	Fluorocarbon		
	Sizes 30 through 40	1C4157X0032	1
	Sizes 45 through 87	1E8458X0022	1
12	Screw, Cap, hex hd		
13	Hex hd Cap Screw		
14	Hex Nut		

*Recommended spare parts

Key	Description	Part Number	Qty
17	Vent Assembly		
18	Spring		
19	Seat, Lower Spring		
27	Extension Rod Conn		
30	Hex hd Cap Screw		
31	Stem Connector Assembly		
32	Travel Indicator Scale		
33	Screw, Self Tapping		
33	Screw, Mach, Fill hd		
34	Disk, Travel Indicator		
39	Nameplate		
40	Screw, Drive		
64	Lower Diaphragm Casing		
69	Nut, Hex, Jam		
70*	Gasket		
	Composition [up to 232°C (450°F)]		
	Sizes 30 through 40	1E801204022	1
	Sizes 45 through 60 & 76	1E845404022	1
70*	O-Ring		
	Nitrile		
	Size 70 & 87	1D269106992	1
71	Lower Diaphragm Plate		
72	Ring, Snap		
73	Yoke		
74	Spring Adjuster		
75	Nut, Hex		
76	Nut, Speed, Twin		
77	Stop, Travel		
78	Bushing, Pipe, Hex		
79	Screw, Mach, Flat Hd		
81	Screw, Mach, Rd Hd		
82	Indicator, Travel, Adaptor		
83	Washer, Plain		
89	Spring Case Adaptor		
90	Screw, Cap		
102	Plug, Pipe, Hex Hd		
144	Actuator Stem		
227	Washer, Plain		
228	Stem Disk Spacer		
237	Lubricant, lithium grease not furnished with actuator		
239	Lubricant, anti-seize not furnished with actuator		
254	Caution Nameplate		

Top-Mounted Handwheel (figures 9, 10, 11, 12, and 13)

Key	Description
58	Handwheel / Handjack Bar
60	Retainer Ring
148	Handwheel Body
150	Extension Rod
152	Up Travel Stop
154	Cap Screw
156	Vent Assembly
157	Guide Plate
158	Mounting Plate
159	Lock Nut
160	Handwheel Screw
161	Cap Screw
166	Castle Nut
167	Cotter Pin
178	Machine Screw
179	Lockwasher
180	Thrust Bearing
181	Thrust Race
182	Bearing Retainer
183	Pipe Nipple
239	Lubricant, anti-seize not furnished with handwheel
247	Handwheel Cap
253	Spacer, Handjack

*Recommended spare parts

Figure 6. Fisher 667 Actuator Sizes 30 through 60

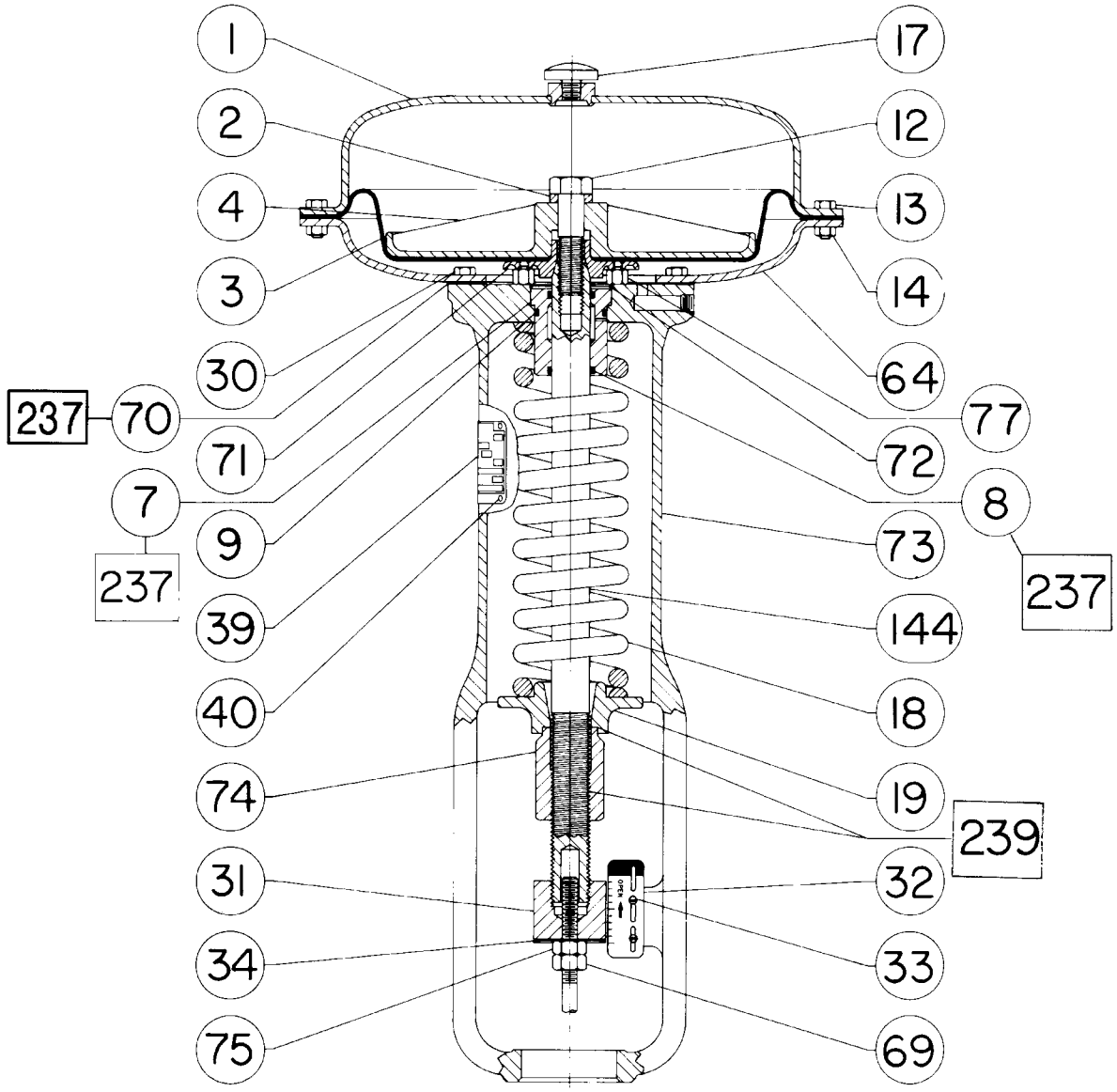

Figure 7. Fisher 667 Size 70 and 76 Actuator

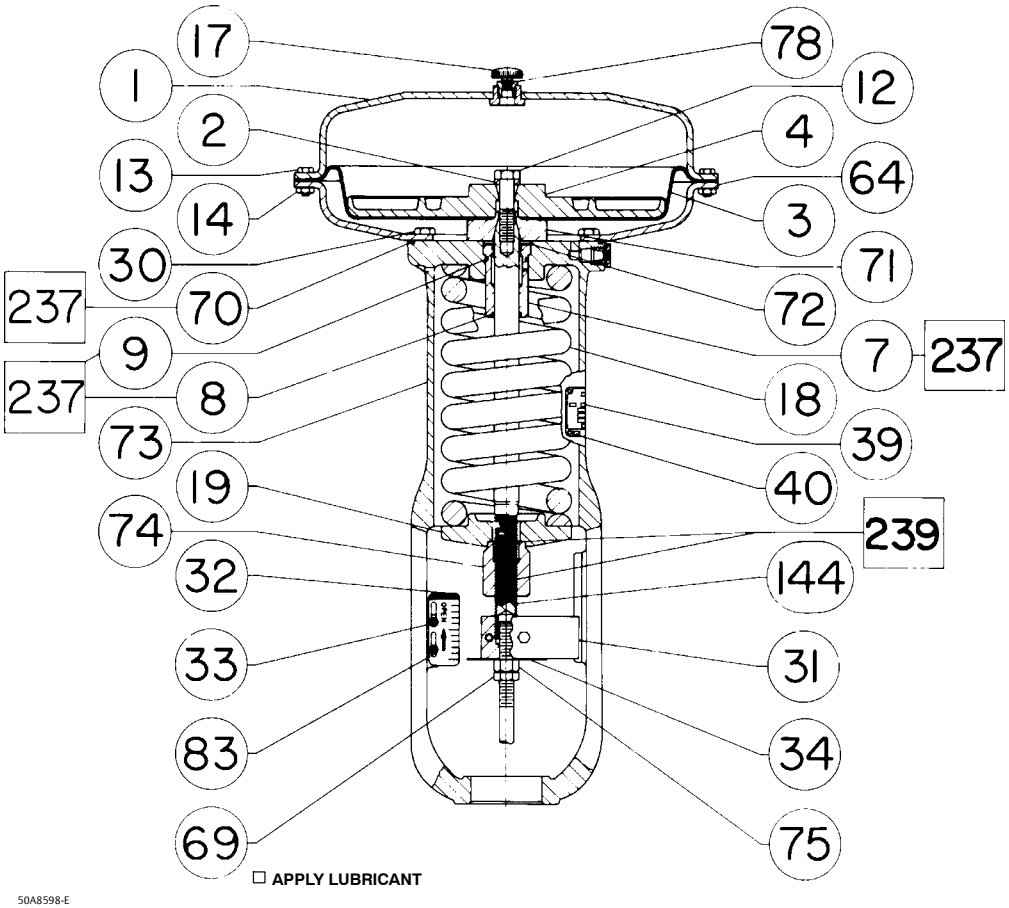

Figure 8. Fisher 667 Size 87 Actuator

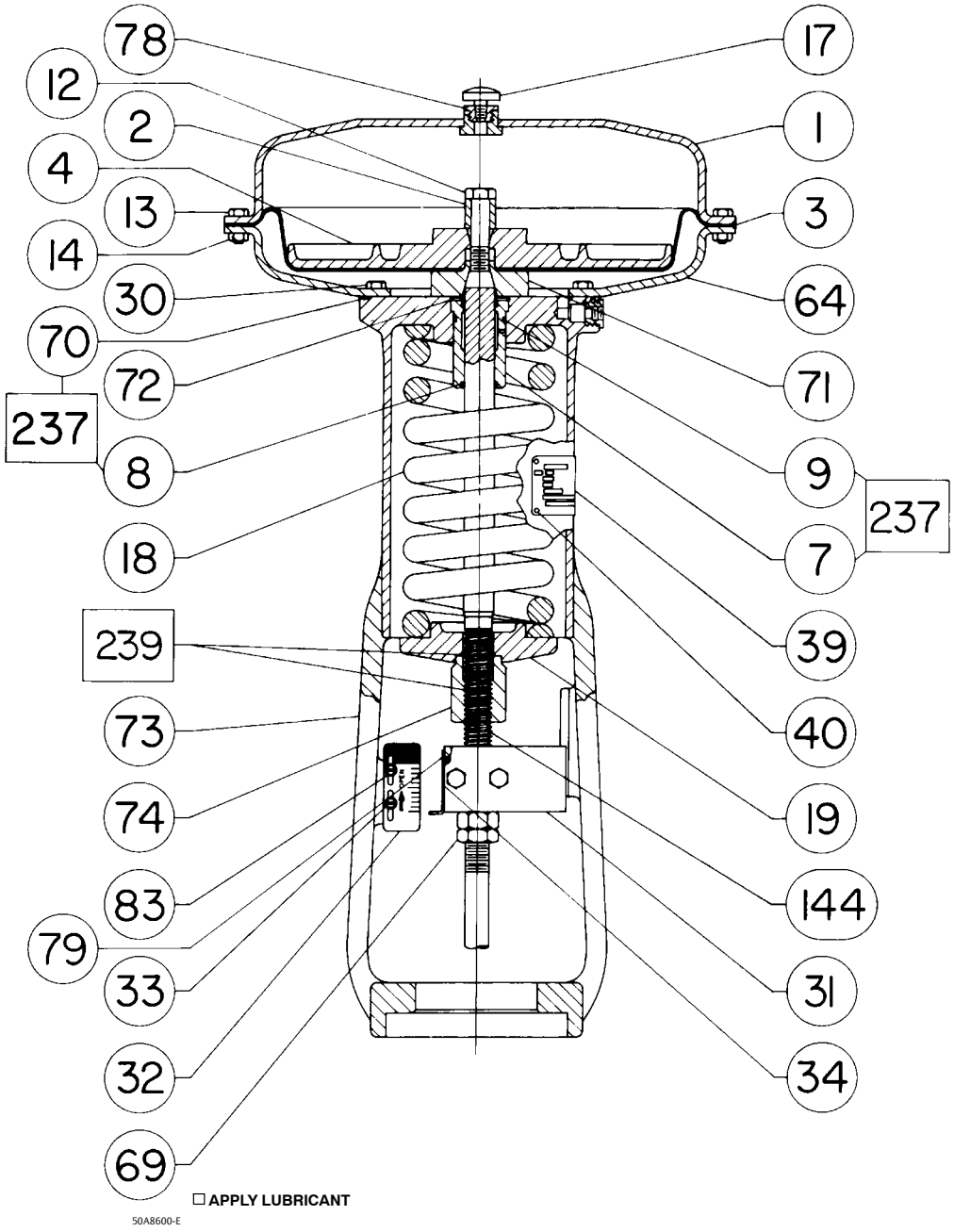

Figure 9. Top-Mounted Handwheel Assembly for Size 30 through 40 Actuators

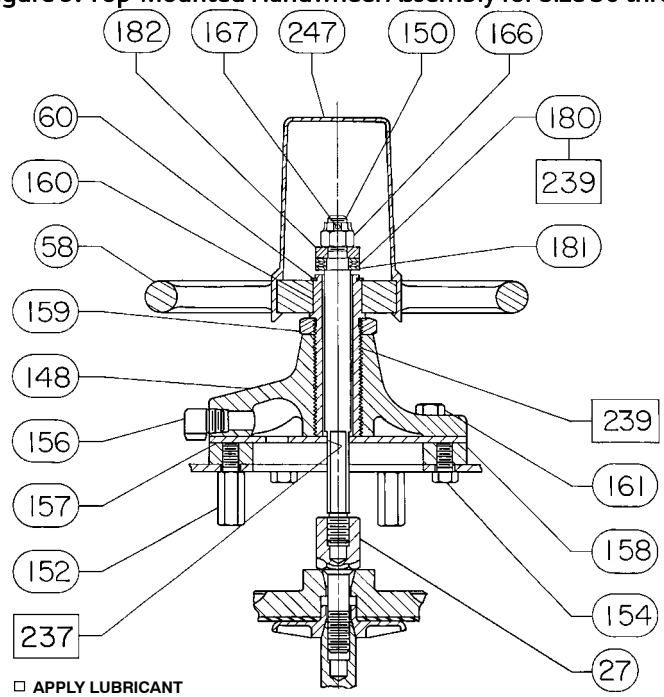

Figure 10. Top-Mounted Handwheel Assembly, Style P2 for Size 45, 50, 60, and 76 Actuators

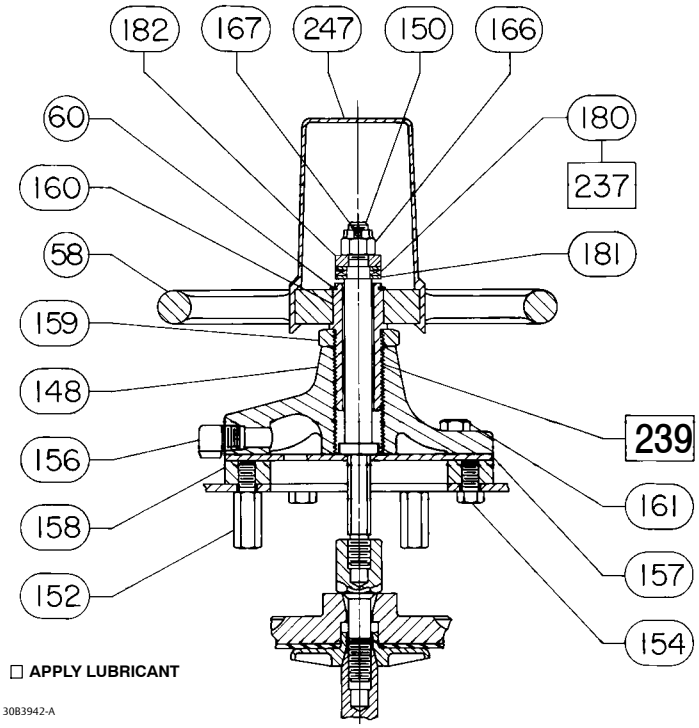

Figure 11. Top-Mounted Handwheel Assembly for Size 45-76 Actuators

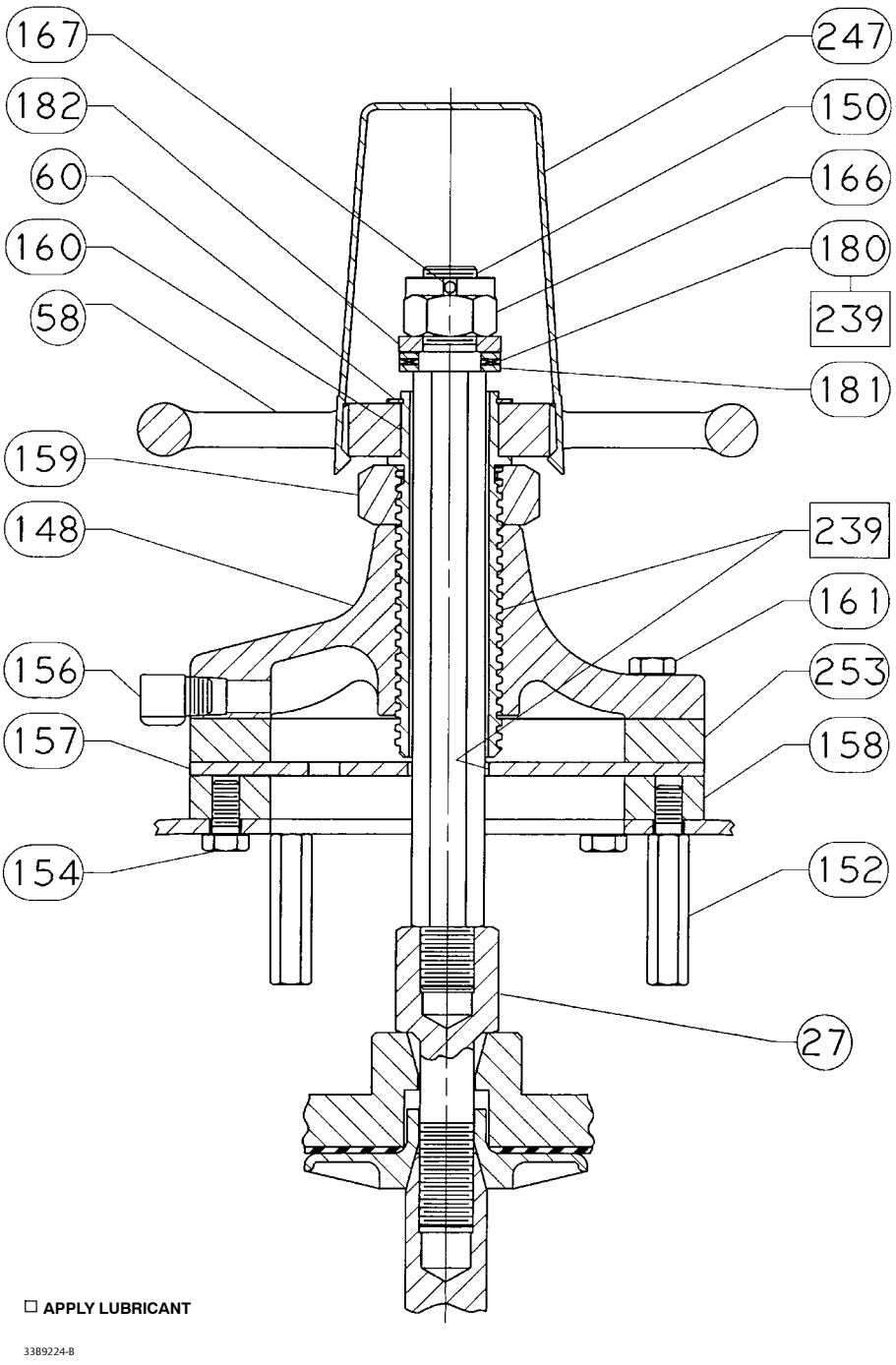

Figure 12. Top-Mounted Handwheel Assembly for Size 70 and 87 Actuators

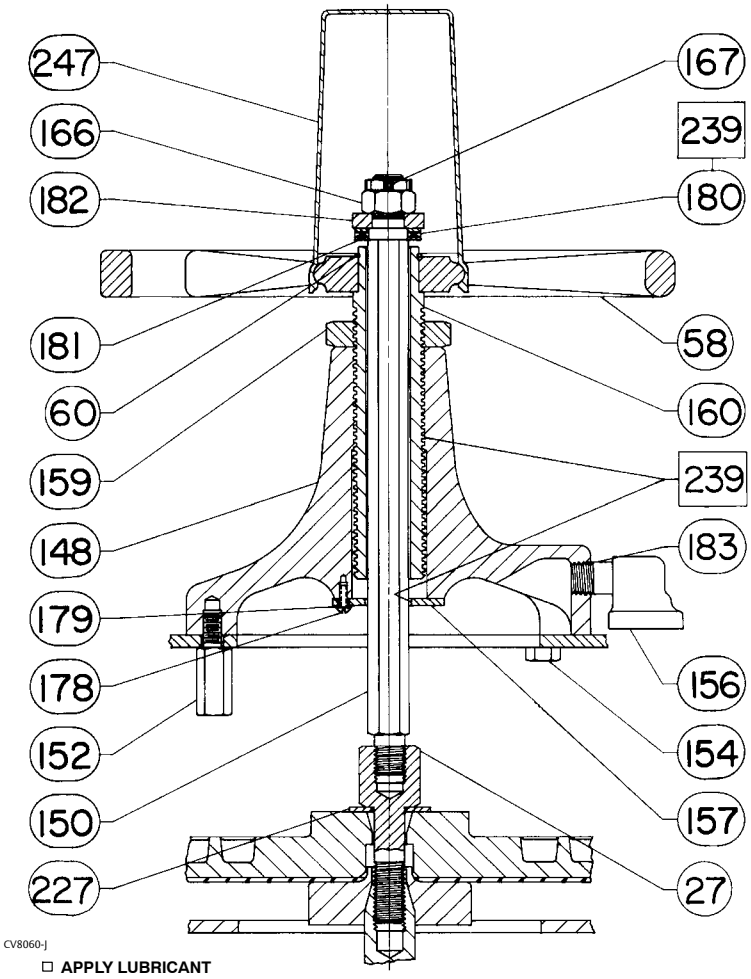

Figure 13. Top-Mounted Handjack Bar Assembly for Size 70 and 87 Actuators

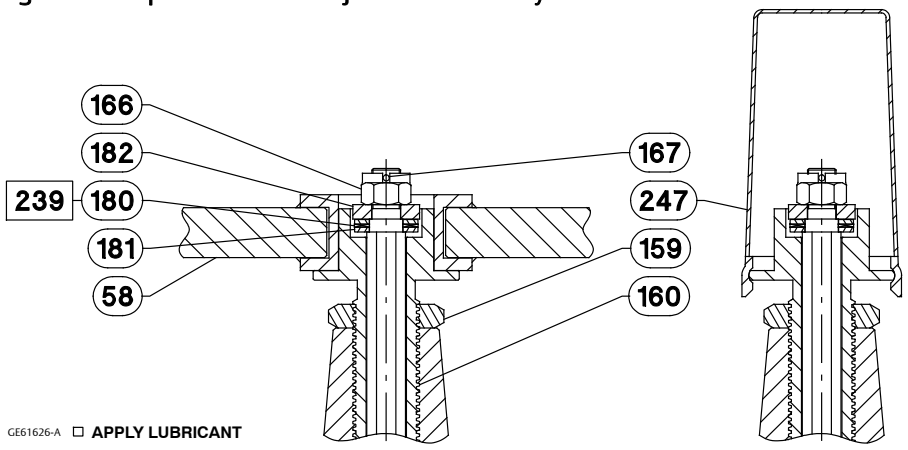

NOTE:
THE TOP MOUNTED HANDJACK BAR SHOULD BE REMOVED WHEN NOT IN USE AND THE HANDWHEEL CAP INSTALLED FOR WEATHER PROTECTION OF INTERNAL COMPONENTS.

Figure 14. Side Mounted Handwheel Assembly for Size 34 and 40 Actuators

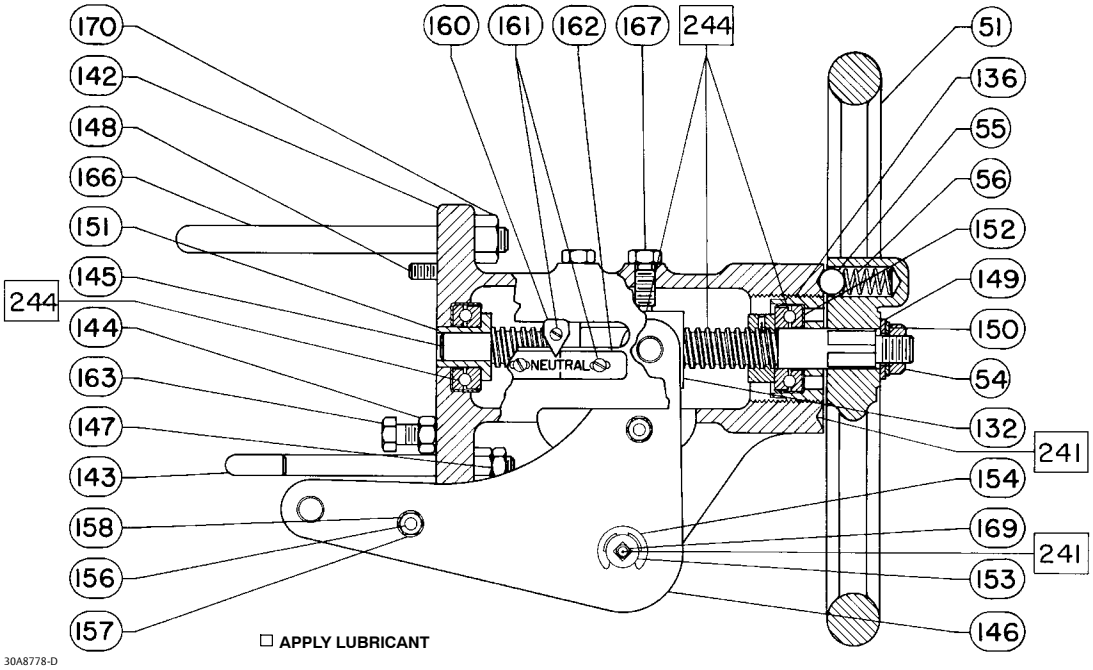

Figure 15. Side-Mounted Handwheel Assembly for Size 45 through 60 Actuators

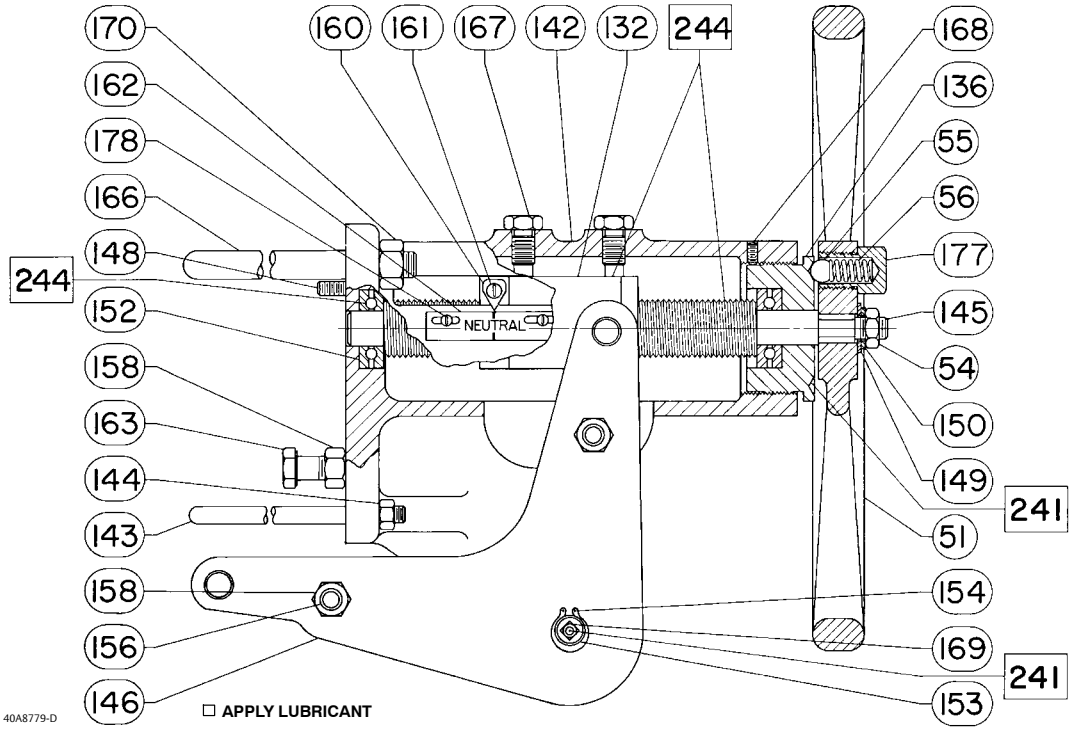

Side-Mounted Handwheel, Size 34-60 (figures 14 and 15)

Key	Description
51	Handwheel
54	Hex Jam Nut
55	Ball
56	Spring
132	Operating Nut
136	Bearing Retainer
142	Handwheel Body
143	Mounting Bolts
144	Hex Nut
145	Handwheel Screw
146	Lever & Pin Assembly
147	Hex Jam Nut
148	Dowel Pin
149	Washer
150	Lockwasher
151	Bushing
152	Ball Bearing
153	Lever Pivot Pin
154	Retaining Ring
155	Spacer
156	Screw
157	Lockwasher
158	Hex Nut
159	Pointer Mounting Bolt
160	Pointer
161	Machine Screw
162	Indicator Plate (Aluminum)
163	Cap Screw
166	U-Bolt
167	Guide Bolt
168	Set Screw
169	Grease Fitting
170	Hex Nut
177	Spring Cap
178	Machine Screw
241	Lubricant, lithium grease Not furnished with handwheel
244	Lubricant, anti-seize Not furnished with handwheel

Side-Mounted Handwheel, Size 70, 76 and 87 (figure 16)

Key	Description
29	Handgrip
38	Handgrip Bolt
44	Worm Gear
45	Bearing Retainer Flange
48	Back Worm Retainer
49	Front Worm Retainer
50	Ball Bearing
51	Worm Shaft
52	Set Screw
57	Grease Fitting
58	Handwheel
87	Cover Band Ass'y
89	Spring Case Adaptor
90	Cap Screw
121	Set Screw
122	Key
123	Lower Sleeve
125	Handwheel Indicator
127	Handwheel Cap
128	Needle Bearing
129	Needle Bearing Race
130	Roll Pin
131	Spring Adjusting Screw
132	Needle Bearing
133	Needle Bearing Race
141	Ball
142	Spring
237	Lubricant, lithium grease Not Furnished with Handwheel
239	Lubricant, anti-seize Not Furnished with Handwheel
245	Yoke Extension

Figure 16. Size 70, 76, and 87 Actuator with Side Mounted Handwheel Assembly

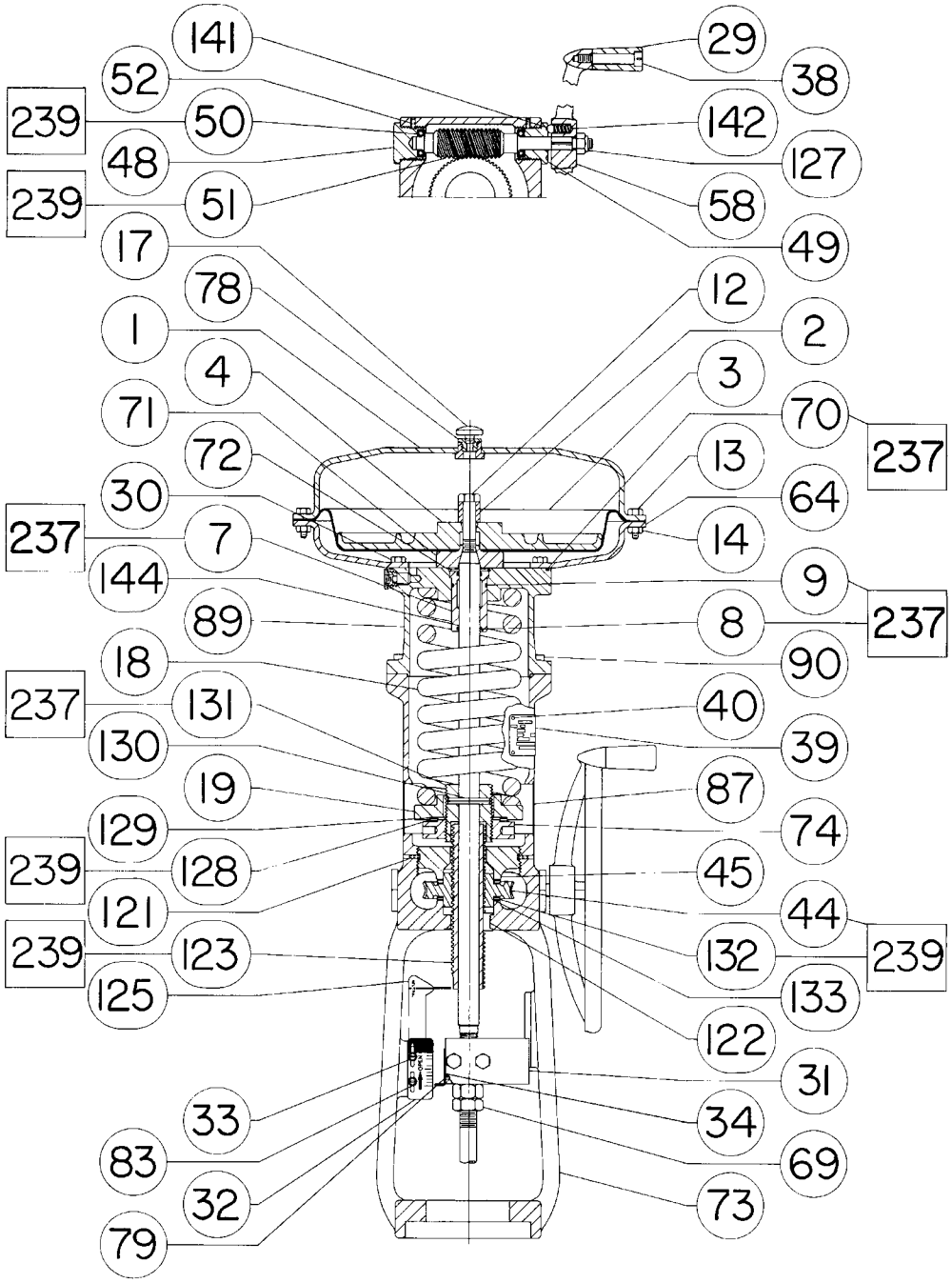

PART NOT SHOWN: 57
☐ APPLY LUBRICANT
E0871

Casing-Mounted Travel Stops (figures 17 through 21)

Key	Description
58	Handwheel
102	Plug, Pipe
127	Hex Nut
148	Travel Stop Body
149	Travel Stop Cap
150	Extension Rod
150	Travel Stop Stem
151	Hex Jam Nut
152	Up Travel Stop
153	Nut, Hex
154	Screw, Cap, Hex Hd
155	Washer
156	Vent
157	Guide Plate
158	Mounting Plate
159	Nut, Travel Stop
160	Screw, Handwheel
161	Screw, Cap, Hex Hd
162	Washer
177	Travel Stop Screw
184	Nipple, Pipe, NPT
237	Lubricant, lithium grease
239	Lubricant, anti-seize
247	Travel Stop Cap
248	Mounting Plate

Figure 17. Style 10 Down Travel Stop - For All Sizes (Casing Mounted)

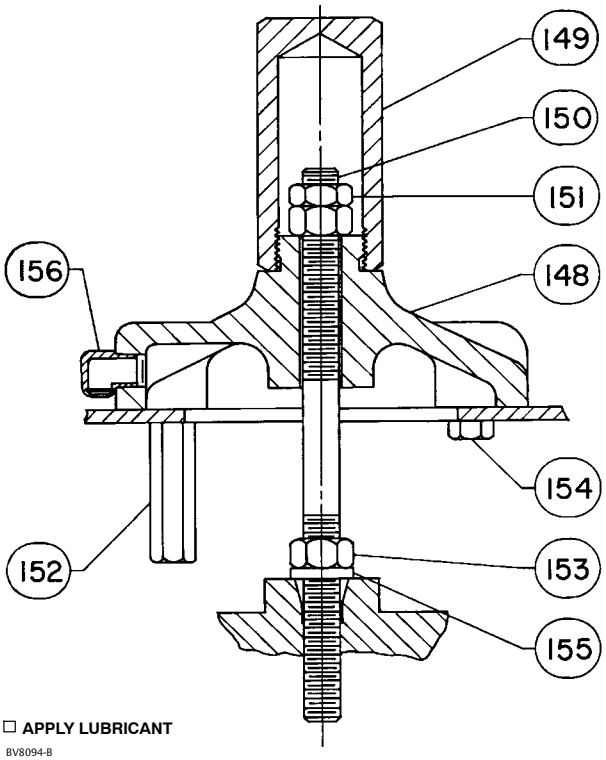

Figure 18. Style 11 Up Or Down Travel Stop - For Sizes 30 to 60 and 76 (Casing Mounted)

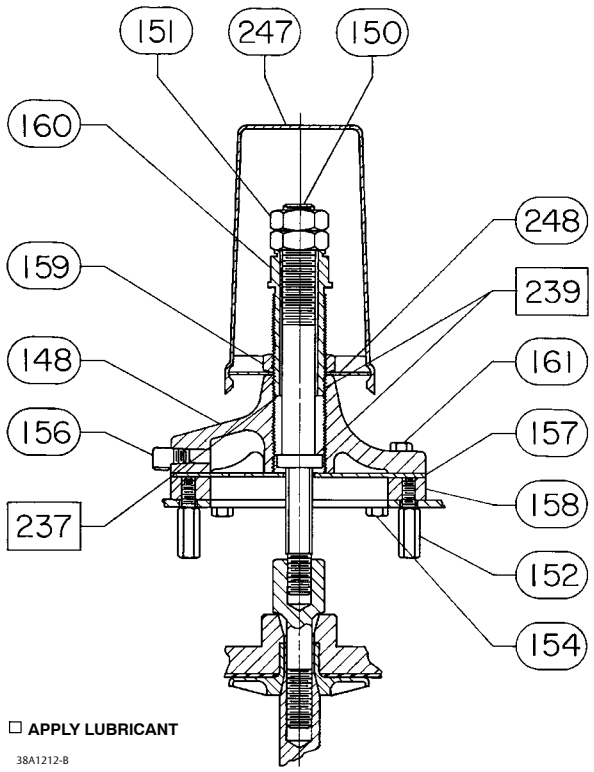

Figure 19. Style 12 Up Travel Stop (Casing Mounted)

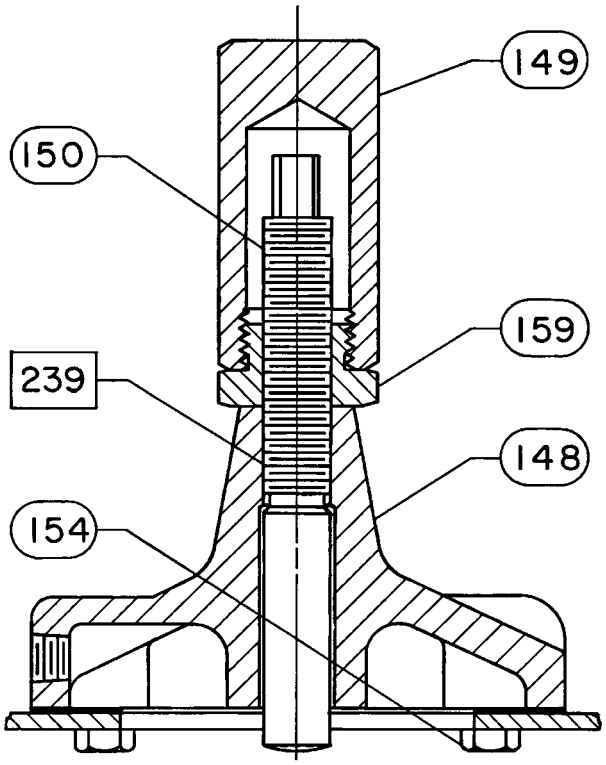

Figure 20. Style 13 Up Travel Stop - For Sizes 30 to 60 and 76, Size 30 Shown (Casing Mounted)

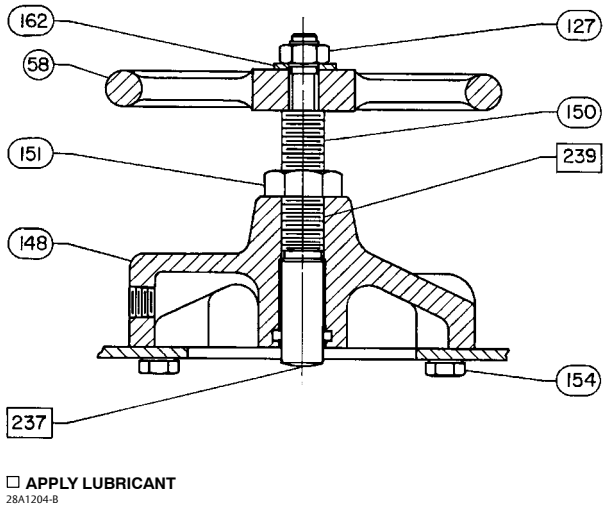

Figure 21. Style 14 Up Travel Stop (Casing Mounted)

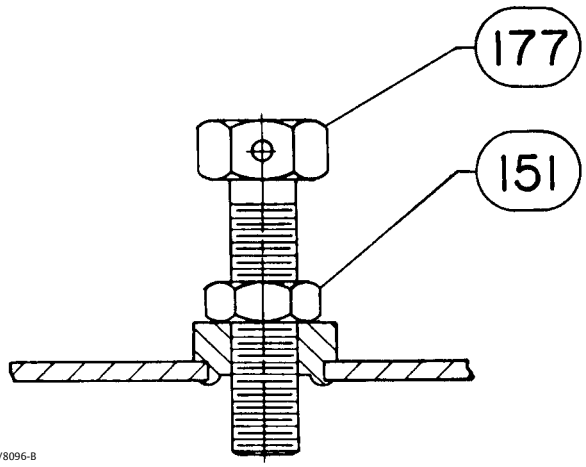

Neither Emerson, Emerson Process Management, nor any of their affiliated entities assumes responsibility for the selection, use or maintenance of any product. Responsibility for proper selection, use, and maintenance of any product remains solely with the purchaser and end user.

Fisher and easy-e are marks owned by one of the companies in the Emerson Process Management business unit of Emerson Electric Co. Emerson Process Management, Emerson, and the Emerson logo are trademarks and service marks of Emerson Electric Co. All other marks are the property of their respective owners.

The contents of this publication are presented for informational purposes only, and while every effort has been made to ensure their accuracy, they are not to be construed as warranties or guarantees, express or implied, regarding the products or services described herein or their use or applicability. All sales are governed by our terms and conditions, which are available upon request. We reserve the right to modify or improve the designs or specifications of such products at any time without notice.

Emerson Process Management
Marshalltown, Iowa 50158 USA
Sorocaba, 18087 Brazil
Chatham, Kent ME4 4QZ UK
Dubai, United Arab Emirates
Singapore 128461 Singapore

www.Fisher.com

© 1980, 2013 Fisher Controls International LLC. All rights reserved.

Fisher® D and DA Valves

Contents

Introduction 1
Scope of Manual 1
Description 1
Specifications 2
Ceramic Trim 2
Installation 3
Maintenance 4
Packing Lubrication 5
Packing Maintenance 5
Replacing Packing 5
Trim Maintenance 7
Disassembly 7
Lapping Metal Seats 8
Assembly 8
Parts Ordering 9
Parts Kits 10
Parts List 10

Figure 1. Fisher D Valve with 657 Actuator



Introduction

Scope of Manual

This instruction manual includes installation, maintenance, and parts information for Fisher D and DA valves. Refer to separate manuals for instructions covering the actuator, positioner, and accessories.

Do not install, operate, or maintain a D or DA valve without being fully trained and qualified in valve, actuator, and accessory installation, operation, and maintenance. To avoid personal injury or property damage, it is important to carefully read, understand, and follow all the contents of this manual, including all safety cautions and warnings. If you have any questions about these instructions, contact your Emerson Process Management sales office before proceeding.

Unless otherwise noted, all NACE references are to NACE MR0175-2002.

Description

The D globe-style (figure 1) and DA angle-style (figure 5) valves are single-port, metal-seated valves for high-pressure applications.

Table 1. Specifications

Maximum Inlet Pressures and Temperatures(1)

If the valve nameplate shows an ASME pressure-temperature class, maximum inlet pressure and temperature is consistent with applicable ASME class per ASME B16.34.
If the nameplate does not show an ASME class, it will show a maximum cold working pressure at 38°C (100°F) (for example, 3600, 6000, 9000, or 10,000 psi)

Maximum Allowable Pressure Drops(1)

Flow up: Capable of full rated pressure drops
Flow down: See table 2 for pressure drop limits for ceramic trim

Shutoff Classification Per ANSI/FCI 70-2 and IEC 60534-4

Standard: Class IV
Optional: Class V

Maximum Service Temperature

232°C (450°F)

Flow Characteristic

Equal Percentage

Flow Direction

D Valve: Flow up through the seat ring and out past the valve plug
DA Valve: Flow in either direction

Approximate Weight

D Valve: 34 kg (75 lbs)
DA Valve: 46 kg (100 lbs)

1. Do not exceed the pressure or temperature limits in this manual and any applicable standard limitations.

Specifications

Specifications for these valves are in table 1. Some of the specifications for a given valve appear on a nameplate, which is attached to the valve actuator or wired to the valve assembly if the valve was purchased without an actuator.

Table 2. Flow Down Pressure Drop Limits - Ceramic Trim Only

VALVE SIZE NPS	SEAT RING DIAMETER, mm (INCHES)					
	6.4 (0.25)	9.5 (0.375)	12.7 (0.5)	19.1 (0.75)	25.4 (1)	31.8 (1.25)
	Pressure Drop, bar					
1	414	414	414	193	---	---
2	689	689	689	462	262	165
	Pressure Drop, psi					
1	6000	6000	6000	2800	---	---
2	10,000	10,000	10,000	6700	3800	2400

Ceramic Trim

Some types of ceramic trim, including the VTC (very tough ceramic) variety, can create a spark under certain circumstances. When the edge of a ceramic part is struck against a second ceramic part with enough force, a spark can be created.

⚠ WARNING

Avoid personal injury and property damage from ignition of process fluid caused by sparks from ceramic trim.
Do not use ceramic trim where the process fluid is unstable or if it is an explosive mixture (such as ether and air).

Installation

⚠ WARNING

Always wear protective gloves, clothing, and eyewear when performing any installation operations to avoid personal injury.

To avoid personal injury or property damage resulting from the sudden release of process pressure or bursting of parts, do not install the valve assembly where service conditions could exceed the limits given in this manual or on the appropriate nameplates. Use pressure-relieving devices as required by government or accepted industry codes and good engineering practices.

Check with your process or safety engineer for any additional measures that must be taken to protect against process media.

If installing into an existing application, also refer to the WARNING at the beginning of the Maintenance section in this instruction manual.

CAUTION

When ordered, the valve configuration and construction materials were selected to meet particular pressure, temperature, pressure drop, and controlled fluid conditions. Some body/trim material combinations are limited in their pressure drop and temperature ranges. Do not apply any other conditions to the valve without first contacting your Emerson Process Management sales office.

1. Before installing the valve, inspect it to be certain that the valve body cavity is free of foreign material. Clean out all pipelines to remove scale, welding slag, and other foreign materials.
2. Install the valve so that flow through the valve is in the direction shown by the arrow cast on the valve body. The control valve assembly may be installed in any position unless limited by seismic considerations. However, the normal method is with the actuator vertical above the valve. With some valves, the actuator may need support when it is not vertical. For more information, consult your Emerson Process Management sales office.
3. Use accepted piping and welding practices when installing the valve in the line. For flanged valve bodies, use suitable gaskets between the body flanges and pipeline flanges.

CAUTION

Depending on valve body materials used, post-weld heat treating might be needed. If so, damage to internal elastomeric and plastic parts, as well as internal metal parts is possible. Shrink-fit pieces and threaded connections may also loosen. In general, if post-weld heat treating is needed, remove all trim parts. Contact your Emerson Process Management sales office for additional information.

For screwed end connections, apply pipe compound to pipeline threads.

4. To allow continuous operation during inspection or maintenance, install a three-valve bypass around the control valve assembly.
5. If you received the actuator and valve body shipped separately, refer to the appropriate actuator instruction manual for the actuator mounting procedure.

Figure 2. Lubricator and Lubricator/Isolating Valve (optional)

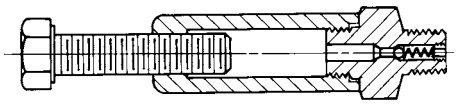

LUBRICATOR

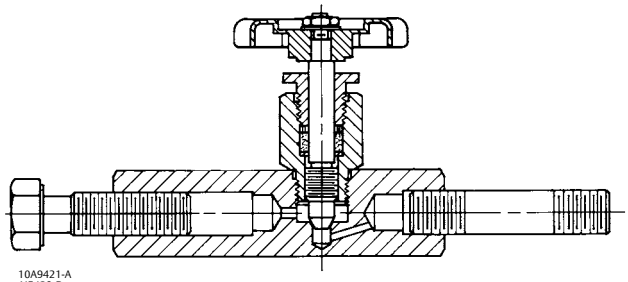

10A9421-A
AJ5428-D
A0832-2

LUBRICATOR/ISOLATING VALVE

⚠ WARNING

Personal injury could result from packing leakage. Valve packing was tightened before shipment; however the packing might require some readjustment to meet specific service conditions.

Maintenance

⚠ WARNING

Avoid personal injury from sudden release of process pressure. Before performing any maintenance operations:

- **Do not remove the actuator from the valve while the valve is still pressurized.**
- **Always wear protective gloves, clothing, and eyewear when performing any maintenance operations to avoid personal injury.**
- **Disconnect any operating lines providing air pressure, electric power, or a control signal to the actuator. Be sure the actuator cannot suddenly open or close the valve.**
- **Use bypass valves or completely shut off the process to isolate the valve from process pressure. Relieve process pressure on both sides of the valve. Drain the process media from both sides of the valve.**
- **Vent the pneumatic actuator loading pressure and relieve any actuator spring precompression.**
- **Use lock-out procedures to be sure that the above measures stay in effect while you work on the equipment.**
- **The valve packing box may contain process fluids that are pressurized, *even when the valve has been removed from the pipeline.* Process fluids may spray out under pressure when removing the packing hardware or packing rings, or when loosening the packing box pipe plug.**
- **Check with your process or safety engineer for any additional measures that must be taken to protect against process media.**

Table 3. Bolting Torque for Packing Box Nuts (Key 15)

VALVE RATING	STEM DIAMETER		MINIMUM RECOMMENDED TORQUE		MAXIMUM RECOMMENDED TORQUE	
	mm	Inches	N•m	Lbf•in	N•m	Lbf•in
3600 or to CL1500	9.5 12.7 19.1	3/8 1/2 3/4	4 7 16	36 66 144	5 11 24	48 96 216
6000 or CL2500	9.5 2.7 19.1	3/8 1/2 3/4	5 9 20	42 78 180	7 12 30	60 108 264
9000 psi	12.7 19.1	1/2 3/4	6 20	54 180	8 30	72 264
10,000 psi	12.7 19.1	1/2 3/4	6 20	54 180	8 30	72 264

Valve body parts are subject to normal wear and must be inspected and replaced as necessary. Inspection and maintenance frequency depends on the severity of service conditions. This section includes instructions for packing lubrication, packing maintenance, trim maintenance, and lapping seating surfaces. All maintenance operations can be performed with the valve in the line.

Note

Whenever a gasket seal is disturbed by removing or shifting gasketed parts, install a new gasket upon reassembly. This is necessary to ensure a good gasket seal because the used gasket might not seal properly.

Packing Lubrication

The valve might have an optional lubricator or lubricator/isolating valve (figure 2) in the tapped bonnet. Use the lubricator or lubricator/isolating valve for PTFE/composition or other packings that need lubrication. Use a silicon-base lubricant. Do not lubricate packing used in oxygen service. To operate the lubricator, turn the cap screw clockwise to force the lubricant into the packing box. The lubricator/isolating valve operates the same way except open the isolating valve before turning the cap screw. Close the isolating valve after lubrication is completed.

Packing Maintenance

Refer to figures 3, 5, and 4 for key number locations. For spring-loaded single PTFE V-ring packing, the packing spring (key 9) maintains a sealing force on the packing. If you find leakage around the packing follower (key 10), check to be sure the packing follower is touching the bonnet (key 5). If the packing follower is not touching the bonnet, tighten the packing flange nuts (key 15) until the packing follower touches the bonnet. If you cannot stop leakage in this way, proceed to the Replacing Packing procedure.

If there is unwanted packing leakage with other than spring-loaded packing, first try to limit the leakage and seal the stem. To limit the leakage, tighten the packing flange nuts (key 15) to at least the minimum recommended torque in table 3. However, do not exceed the maximum recommended torque in table 3, or excessive friction might result. If the packing (key 8) is relatively new and tight on the stem, and tightening the packing flange nuts does not stop the leakage, a worn or nicked valve stem might prevent a seal. If the leakage comes from the outside diameter of the packing, nicks or scratches around the packing box wall might cause the leakage. While replacing the packing per the numbered steps below, inspect the valve stem and packing box wall for nicks and scratches.

Replacing Packing

Except where indicated, refer to figures 3, 5, and 4 for key number locations.

Figure 3. Packing Arrangements

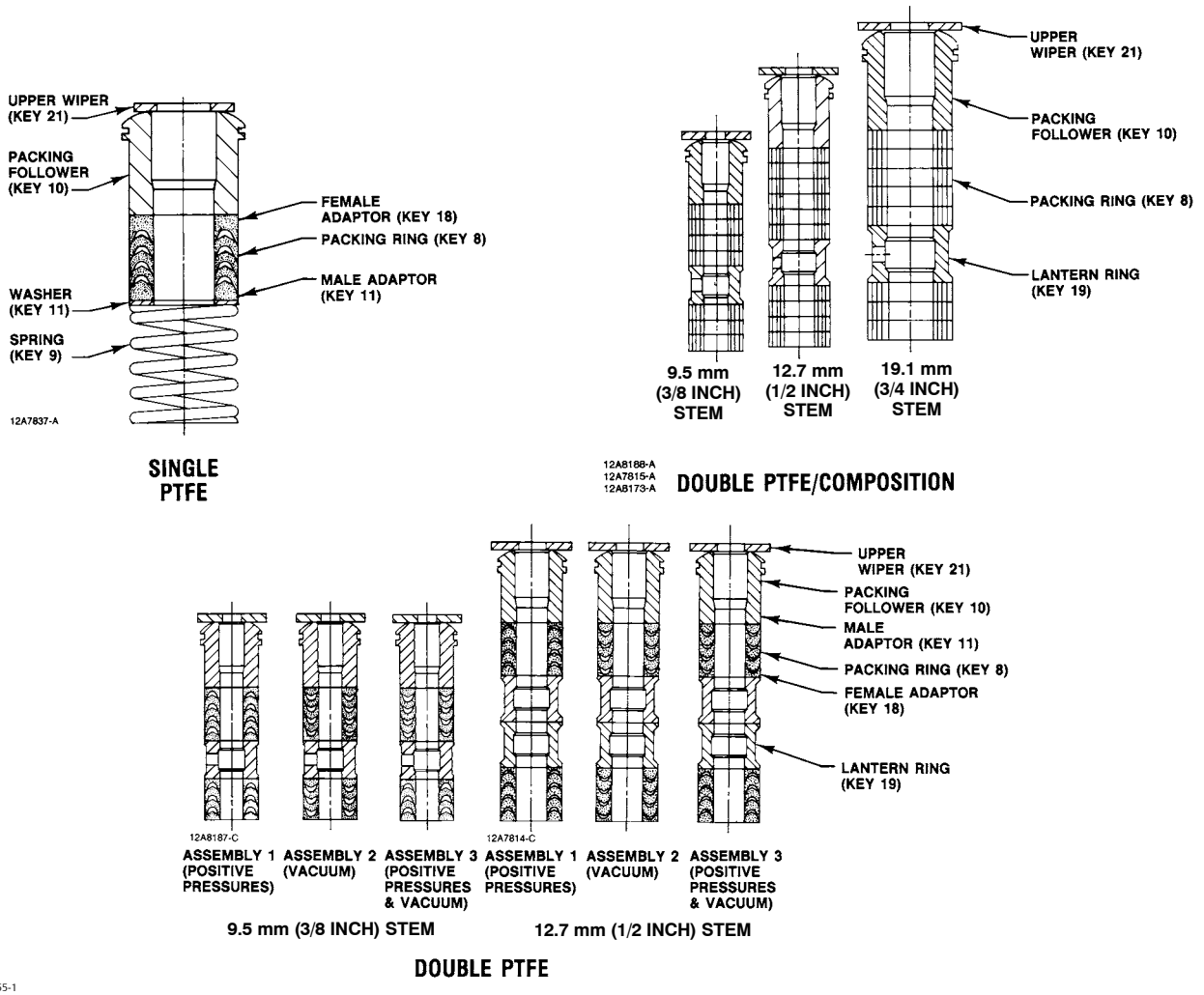

⚠ WARNING

Refer to the WARNING at the beginning of the Maintenance section in this instruction manual.

1. Isolate the control valve from the line pressure, release pressure from both sides of the valve body, and drain the process media from both sides of the valve. If using a power actuator, also shut-off all pressure lines to the power actuator and any leak-off piping from the bonnet. Release all pressure from the actuator and relieve spring precompression. Use lock-out procedures to be sure that the above measures stay in effect while you work on the equipment.

Disconnect the stem connector, and then remove the actuator from the valve body by unscrewing the actuator yoke locknut (key 14).

2. Loosen the packing flange nuts (key 15) so the packing is not tight on the valve stem. Remove any travel indicator parts and stem locknuts from the valve stem threads.

3. Unscrew the bonnet (key 5) from the valve body (key 1). Carefully lift off the bonnet and valve plug/stem assembly (key 4) as a unit. Set the bonnet on a protective surface to prevent damage to the bonnet threads and gasket surface.
4. Remove the valve plug/stem assembly from the bonnet. If you plan to re-use the valve plug, tape or otherwise protect the valve plug seating surface and the stem threads to prevent damage.
5. Remove the bonnet gasket (key 7). Cover the opening in the valve body to protect the gasket surface and prevent foreign material from getting into the body cavity.
6. Remove the packing flange nuts, packing flange, upper wiper, and follower (keys 15, 12, 21, and 10). Carefully push out all the remaining packing box parts from the bonnet using a rounded rod or other tool that will not scratch the packing box wall or bottom guide bushing. Clean the packing box and the metal packing box parts.
7. Inspect the valve stem threads and packing box surfaces for any sharp edges that might cut the packing. Scratches or burrs could cause packing box leakage or damage to the new packing. If you cannot improve the surface condition by light sanding, replace the damaged parts.
8. Install a new bonnet gasket (key 7), making sure the gasket seating surfaces are clean and smooth. Carefully install the valve plug/stem assembly into the valve body. Then slide the bonnet over the stem and thread it tightly into the valve body, per the torque values in table 4.
9. Install new packing and the metal packing box parts according to the correct arrangement in figure 3. Place a smooth-edged pipe over the valve stem, and gently tap each soft packing part into the packing box.

Table 4. Torque for Body-to-Bonnet Joint

VALVE SIZE, NPS	RECOMMENDED TORQUE	
	N•m	Lbf•ft
1	1060	780
2 - 6000(1) 2 - 10,000(1)	2030 2710	1500 2000

1. Valve rating.

Table 5. Torque for Seat Ring (Key 2)

VALVE SIZE		RECOMMENDED TORQUE	
mm	NPS	N•m	Lbf•ft
25.4	1	407	300
50.8	2	698	515

10. Slide the packing follower, upper wiper, and packing flange (keys 10, 21, and 12) into position. Lubricate the packing flange studs (key 13) and the faces of the packing flange nuts (key 15). Install the packing flange nuts.
11. For spring-loaded PTFE V-ring packing, tighten the packing flange nuts (key 15) until the packing follower (key 10) contacts the bonnet. For other packing arrangements, tighten the packing flange nuts (key 15) alternately in small equal increments. Continue until one of the nuts reaches the minimum recommended torque shown in table 3. Then tighten the remaining packing flange nut until the packing flange is level and at a 90-degree angle to the valve stem.
12. Mount the actuator on the bonnet (key 5) and connect the actuator and valve plug stem according to the procedure in the appropriate actuator instruction manual. Check for leakage around the packing follower when you put the control valve assembly into service. Retighten the packing flange nuts as required.

Trim Maintenance

Refer to figure 4 and 5 for key number locations.

Disassembly

1. Remove the actuator and the bonnet as described in steps 1 through 3 of the Replacing Packing procedure.

CAUTION

Use care to avoid damaging the gasket sealing surfaces.

The stem surface finish of the valve plug/stem assembly (key 4) is critical for making a good packing seal. The seating surfaces of the seat ring (key 2) and the plug of the valve plug/stem assembly (key 4) are critical for tight shutoff. Protect these parts from damage if you plan to re-use them in the valve.

2. If you wish, remove the valve plug/stem assembly (key 4) and the packing parts from the bonnet. If you plan to re-use the valve plug, tape or otherwise protect the valve plug seating surface and the stem threads to prevent damage. Remove the packing parts as described in the Packing Maintenance procedure.
3. Use a socket wrench to remove the seat ring (key 2).
4. Remove the seat ring (key 2) and seat ring gasket (key 3) from the valve body.
5. Inspect parts for wear or damage that would prevent proper operation of the valve body. Clean the gasket surfaces.
6. Replace trim parts as necessary or use the Lapping Metal Seats procedure.

Lapping Metal Seats

A certain amount of leakage should be expected with metal-to-metal seating in any valve body. If the leakage becomes excessive, however, the condition of the seating surfaces of the valve plug and seat ring (keys 4 and 2, figures 4 and 5) can be improved by lapping. (Deep nicks should be machined out rather than ground out.) Use a good quality lapping compound of a mixture of 280 to 600-grit. Apply the compound to the bottom of the valve plug.

Partially assemble the valve so the seat ring and valve plug are in place and the bonnet (with bushing installed) is screwed hand-tight into the body. Make a simple handle from a piece of strap iron locked to the valve plug stem with nuts. Rotate the handle alternately in each direction with light downward pressure to lap the seats. If you think there is not enough lubrication (for example, if you hear a squeaking noise or feel vibration), stop the procedure, and apply more lapping compound before continuing. After lapping, remove the bonnet and valve plug/stem assembly as a unit, and clean the seating surfaces. Completely assemble as described in the Assembly portion of the Trim Maintenance procedure.

Test the valve for shutoff. Repeat the lapping procedure if leakage is still excessive.

Assembly

1. Thoroughly clean the seat ring and bonnet threads in the valve body (key 1). Also clean the valve body seat ring gasket surfaces.
2. Apply anti-seize lubricant to the threads of the seat ring (key 2), bonnet (key 5), and their mating threads in the body.
3. Put the seat ring gasket (key 3) into the body.
4. Screw the seat ring into the body. Use a socket wrench to tighten the seat ring to the torque values shown in table 4. Remove all excess lubricant after tightening.
5. Clean the bonnet gasket seating surfaces, and install a new bonnet gasket (key 7).
6. If you had not removed the valve plug/stem assembly and packing from the bonnet, then install the bonnet (key 5) and valve plug/stem assembly (key 4) as a unit, into the valve body. Keeping the valve plug/stem assembly in an ``up'' position, thread the bonnet tightly into the valve body, per torque values in table 4.
7. If you had previously chosen to remove the valve plug/stem assembly and packing from the bonnet, then remove any protective tape or covering from the valve plug/stem assembly (key 4) and carefully install it into the valve body. Slide the bonnet (key 5) over the stem and thread it tightly into the valve body. Install new packing and the

metal packing box parts according to the correct arrangement in figure 3. Place a smooth-edged pipe over the valve stem, and gently tap each soft packing part into the packing box.

8. Slide the packing follower, upper wiper, and packing flange (keys 10, 21, and 12) into position. Lubricate the packing flange studs (key 13) and the washer surfaces of the packing flange nuts (key 15). Install the packing flange nuts.
9. For spring-loaded PTFE V-ring packing, tighten the packing flange nuts (key 15) until the packing follower (key 10) contacts the bonnet. For other packing arrangements, tighten the packing flange nuts (key 15) alternately in small equal increments. Continue until one of the nuts reaches the minimum recommended torque shown in table 3. Then tighten the remaining packing flange nut until the packing flange is level and at a 90-degree angle to the valve stem.
10. Mount the actuator on the bonnet (key 5) and connect the actuator and valve plug stem according to the procedure in the appropriate actuator instruction manual. Check for leakage around the packing follower (key 10) when you put the control valve assembly into service. Retighten the packing flange nuts as required.

Parts Ordering

Each body-bonnet assembly is assigned a serial number, which is on the body or nameplate. The serial number also appears on the actuator nameplate if you bought a valve and actuator assembly. Refer to this serial number when contacting your Emerson Process Management sales office for technical advice. When ordering replacement parts, mention the serial number. Also specify key number, part description, material, and part number from the following lists of Parts Kits and part numbers.

⚠ WARNING

Use only genuine Fisher replacement parts. Components that are not supplied by Emerson Process Management should not, under any circumstances, be used in any Fisher valve, because they may void your warranty, might adversely affect the performance of the valve, and could cause personal injury and property damage.

Note

Neither Emerson, Emerson Process Management, nor any of their affiliated entities assumes responsibility for the selection, use, or maintenance of any product. Responsibility for the selection, use, and maintenance of any product remains with the purchaser and end user.

Parts Kits

Key	Description	Part Number
- - -	Packing Box Parts for Double PTFE V-Ring	
	Packing (Includes keys 3, 7, 8, 11, 18, 19, and 21)	
	9.5 mm (3/8 Inch) Stem	RDX0000CN12
	12.7 mm (1/2 Inch) Stem	RDX0000CN22
- - -	Trim Package (S31600) [Includes Equal Percentage S31600 (316 SST) W/R30006 (alloy 6) tip valve plug/stem (key 4), S316000 w/alloy 6 seat ring (key 2), stainless steel gaskets (keys 3 & 7), and single PTFE packing parts (keys 8, 9, 11, 17, 18, and 21) or double PTFE packing parts (keys 8, 11, 18, 19, and 21)]	
	Double PTFE V-Ring Packing	
	NPS 1 Valve w/ 9.5 mm (3/8 Inch) Stem Dia.	
	6.4 mm (0.25 Inch) port dia.	RDXCNTRM112
	9.5 mm (0.375 Inch) port dia.	RDXCNTRM122
	12.7 mm (0.5 Inch) port dia.	RDXCNTRM132
	19.1 mm (0.75 Inch) port dia.	RDXCNTRM142
	NPS 2 Valve w/ 12.7 mm (1/2 Inch) Stem Dia.	
	6.4 mm (0.25 Inch) port dia.	RDXCNTRM212
	9.5 mm (0.375 Inch) port dia.	RDXCNTRM222
	12.7 mm (0.5 Inch) port dia.	RDXCNTRM232
	19.1 mm (0.75 Inch) port dia.	RDXCNTRM242
	25.4 mm (1-Inch) port dia.	RDXCNTRM252
	31.8 mm (1.25 Inch) port dia.	RDXCNTRM262
- - -	Trim Package (Ceramic)	
	Includes seat ring and valve plug/stem assy (keys 2 and 4)	
	NPS 1 Valve w/ 9.5 mm (3/8 Inch) Stem Dia.	
	6.4 mm (0.25 Inch) port dia.	RDXVTC00012
	9.5 mm (0.375 Inch) port dia.	RDXVTC00022
	12.7 mm (0.5 Inch) port dia.	RDXVTC00032
	19.1 mm (0.75 Inch) port dia.	RDXVTC00042
	NPS 2 Valve w/ 12.7 mm (1/2 Inch) Stem Dia.	
	6.4 mm (0.25 Inch) port dia.	RDXVTC00052
	9.5 mm (0.375 Inch) port dia.	RDXVTC00062
	12.7 mm (0.5 Inch) port dia.	RDXVTC00072
	19.1 mm (0.75 Inch) port dia.	RDXVTC00082
	25.4 mm (1-Inch) port dia.	RDXVTC00092
	31.8 mm (1.25 Inch) port dia.	RDXVTC00102

Parts List

Note
Part numbers are shown for recommended spares only. For part numbers not shown, contact your Emerson Process Management sales office.

Note
Abbreviations used in this parts list are: SST (stainless steel), RTJ (ring-type joint), RF (raised face), SCH (schedule), BWE (buttwelding end), dia. (diameter), in. (inches), mm (millimeters), psi (pounds per square inch), and zn pl (zinc plated).
Sizes shown in inches are valve sizes unless otherwise stated.
Select parts titled 3600 PSI if your valve has a CL1500 or lower rating and select parts titled 6000 PSI if your valve has a CL2500 rating.

Key	Description	Part Number
001	Valve Body	
	If you need a valve body as a replacement part, order by valve size, serial number, and desired material.	
002*	Seat Ring	
	CF8M or S31600 (316 SST) w/COCR-A seat	
	NPS 1 valve	
	6.4 mm (0.25 inch) port dia.	2B5097X0012
	9.5 mm (0.375 inch) port dia.	2B5098X0012
	12.7 mm (0.5 inch) port dia.	2B5099X0012
	19.1 mm (0.75 inch) port dia.	2B5100X0012
	NPS 2 valve	
	6.4 mm (0.25 inch) port dia.	2B5106X0012
	9.5 mm (0.375 inch) port dia.	2B5107X0012
	12.7 mm (0.5 inch) port dia.	2B5108X0012
	19.1 mm (0.75 inch) port dia.	2B5109X0012
	25.4 mm (1-inch) port dia.	2B5110X0012
	31.8 mm (1.25 inch) port dia.	2K1801X0012
	316 SST w/tungsten carbide insert	
	NPS 1 valve	
	6.4 mm (0.25 inch) port dia.	1J6886000A2
	9.5 mm (0.375 inch) port dia.	1J6887000A2
	12.7 mm (0.5 inch) port dia.	1J6888000A2
	19.1 mm (0.75 inch) port dia.	1J6889000A2
	NPS 2 valve	
	6.4 mm (0.25 inch) port dia.	1J6899000A2
	9.5 mm (0.375 inch) port dia.	1J8154000A2
	12.7 mm (0.5 inch) port dia.	1J8156000A2
	25.4 mm (1-inch) port dia.	1J8160000A2
	Ceramic	
	NPS 1 valve	
	6.4 mm (0.25 inch) port dia.	22B8996X012
	9.5 mm (0.375 inch) port dia.	22B8997X012
	12.7 mm (0.5 inch) port dia.	22B8998X012
	19.1 mm (0.75 inch) port dia.	22B8999X012
	NPS 2 valve	
	6.4 mm (0.25 inch) port dia.	22B9000X012
	9.5 mm (0.375 inch) port dia.	22B9001X012
	12.7 mm (0.5 inch) port dia.	22B9002X012
	19.1 mm (0.75 inch) port dia.	22B9003X012
	25.4 mm (1-inch) port dia.	22B9004X012
	31.8 mm (1.25 inch) port dia.	22B9005X012

Key	Description	Part Number
003*	Gasket	
	S31600 (316 SST)	
	For NPS 1 valves and NACE MR0175-2002(1)	1B198636042
	For NPS 2 valves and NACE MR0175-2002(1)	1B198836042
004*	Micro-Flute valve plug/stem assembly	
	NACE MR0175-2002(1) S31600, COCR-A seat - S20910	
	NPS 1 valve, 9.5 mm (3/8 in.) stem	
	1 flute	
	6.4 mm (0.25 inch) port dia.	2N7147X0032
	3 flutes	
	6.4 mm (0.25 inch) port dia.	2F3280X0022
	9.5 mm (0.375 inch) port dia.	2N7389X0022
	12.7 mm (0.5 inch) port dia.	2N7338X0022
	19.1 mm (0.75 inch) port dia.	2N7393X0022
004*	Equal percentage valve plug/stem assembly	
	S31600 (316 SST) w/S20910 (22-13-5) & Alloy 6 for NACE MR0175-2002(1)	
	NPS 1 valve, 9.5 mm (3/8 in.) stem	
	6.4 mm (0.25 inch) port dia.	2F1388X0042
	9.5 mm (0.375 inch) port dia.	2F1389X0032
	12.7 mm (0.5 inch) port dia.	2F1390X0032
	19.1 mm (0.75 inch) port dia.	2F1391X0032
	NPS 2 valve, 12.7 mm (1/2 in.) stem	
	6.4 mm (0.25 inch) port dia.	2F1427X0022
	9.5 mm (0.375 inch) port dia.	2F1428X0022
	12.7 mm (0.5 inch) port dia.	2F1429X0022
	19.1 mm (0.75 inch) port dia.	2F1430X0022
	25.4 mm (1-inch) port dia.	2F1431X0022
	31.8 mm (1.25 inch) port dia.	2L5331X0032
	S31600 (316 SST) w/tungsten carbide tip for NACE MR0175-2002(1)	
	NPS 1 valve, 9.5 mm (3/8 in.) stem	
	6.4 mm (0.25 inch) port dia.	2J6894X0022
	9.5 mm (0.375 inch) port dia.	2J6895X0022
	12.7 mm (0.5 inch) port dia.	2J6896X0022
	19.1 mm (0.75 inch) port dia.	2J6897X0022
	NPS 2 valve, 12.7 mm (1/2 in.) stem	
	6.4 mm (0.25 inch) port dia.	2J8189X0022
	9.5 mm (0.375 inch) port dia.	2J8191X0022
	12.7 mm (0.5 inch) port dia.	2J8193X0022
	19.1 mm (0.75 inch) port dia.	2J8195X0022
	25.4 mm (1-inch) port dia.	2J8197X0052
	31.8 mm (1.25 inch) port dia.	2V2234X0022
	Ceramic	
	NPS 1 valve, 9.5 mm (3/8 in) stem	
	6.4 mm (0.25 inch) port dia.	22B8956X012
	9.5 mm (0.375 inch) port dia.	22B8957X012
	12.7 mm (0.5 inch) port dia.	22B8958X012
	19.1 mm (0.75 inch) port dia.	22B8959X012
	NPS 1 valve, 12.7 mm (1/2 inch) stem	
	6.4 mm (0.25 inch) port dia.	22B8960X012
	9.5 mm (0.375 inch) port dia.	22B8961X012
	12.7 mm (0.5 inch) port dia.	22B8962X012
	19.1 mm (0.75 inch) port dia.	22B8963X012
	NPS 1 valve, 19.1 mm (3/4 in) stem	
	6.4 mm (0.25 inch) port dia.	22B8964X012
	9.5 mm (0.375 inch) port dia.	22B8965X012
	12.7 mm (0.5 inch) port dia.	22B8966X012
	19.1 mm (0.75 inch) port dia.	22B8967X012
	NPS 2 valve, 12.7 mm (1/2 in) stem	
	6.4 mm (0.25 inch) port dia.	22B8968X012
	9.5 mm (0.375 inch) port dia.	22B8969X012
	12.7 mm (0.5 inch) port dia.	22B8970X012
	19.1 mm (0.75 inch) port dia.	22B8971X012
	25.4 mm (1-inch) port dia.	22B8972X012
	31.8 mm (1.25 inch) port dia.	22B8973X012
	NPS 2 valve, 19.1 mm (3/4 inch) stem	
	6.4 mm (0.25 inch) port dia.	22B8974X012
	9.5 mm (0.375 inch) port dia.	22B8975X012
	12.7 mm (0.5 inch) port dia.	22B8976X012
	19.1 mm (0.75 inch) port dia.	22B8977X012
	25.4 mm (1-inch) port dia.	22B8978X012
	31.8 mm (1.25 inch) port dia.	22B8979X012
005	Bonnet/Bushing Assy	
	If you need a bonnet as a replacement part, order by valve size and stem diameter, serial number, and desired material.	
007*	Gasket	
	S31600 (316 SST)	
	For NPS 1 valves and NACE MR0175-2002(1)	1B198236042
	For NPS 2 valves and NACE MR0175-2002(1)	1B198436042
008*	Packing Ring	
	Double PTFE/Composition packing	
	9.5 mm (3/8 in.) stem (7 req'd)	1F3370X0012
	12.7 mm (1/2 in.) stem (10 req'd)	1E319001042
	19.1 mm (3/4 in.) stem (8 req'd)	1E319101042
	Double PTFE V-Ring	
	9.5 mm (3/8 in.) stem (6 req'd)	1C752601012
	12.7 mm (1/2 in.) stem (6 req'd)	1C752701012
	19.1 mm (3/4 in.) stem (6 req'd)	1C752801012
010	Packing Follower	
011*	Packing Adaptor, male	
	Double PTFE V-Ring packing	
	9.5 mm (3/8 in.) stem (2 req'd)	1F124801012
	12.7 mm (1/2 in.) stem (2 req'd)	1F124701012
	19.1 mm (3/4 in.) stem (2 req'd)	1F124601012
012	Packing Flange	
013	Packing Box Stud	
014	Yoke Locknut, steel	
015	Hex Nut	
016	Pipe Plug	
016	Stem Lubricator/Isolating Valve	
016	Pipe Nipple, for lubricator/isolating valve	
016	Stem Lubricator	
018*	Packing Adaptor, female	
	Double PTFE V-Ring	
	9.5 mm (3/8 in.) stem (2 req'd)	1F124401012
	12.7 mm (1/2 in.) stem (2 req'd)	1F124301022
	19.1 mm (3/4 in.) stem (2 req'd)	1F124201012
019	Lantern Ring	
021*	Upper Wiper, felt	
	9.5 mm (3/8 in.) stem	1J872606332
	12.7 mm (1/2 in.) stem	1J872706332
	19.1 mm (3/4 in.) stem	1J872806332
025	Seal & Wire (not shown), lead	
	Required only if actuator is not furnished	
- - -	Tag,warning (not shown)	

*Recommended spare parts

1. These materials are listed in NACE standard MR0175-2002 as being acceptable for direct exposure to sour environment when used under conditions stated in that standard.

Figure 4. Fisher D Globe-Style Valve

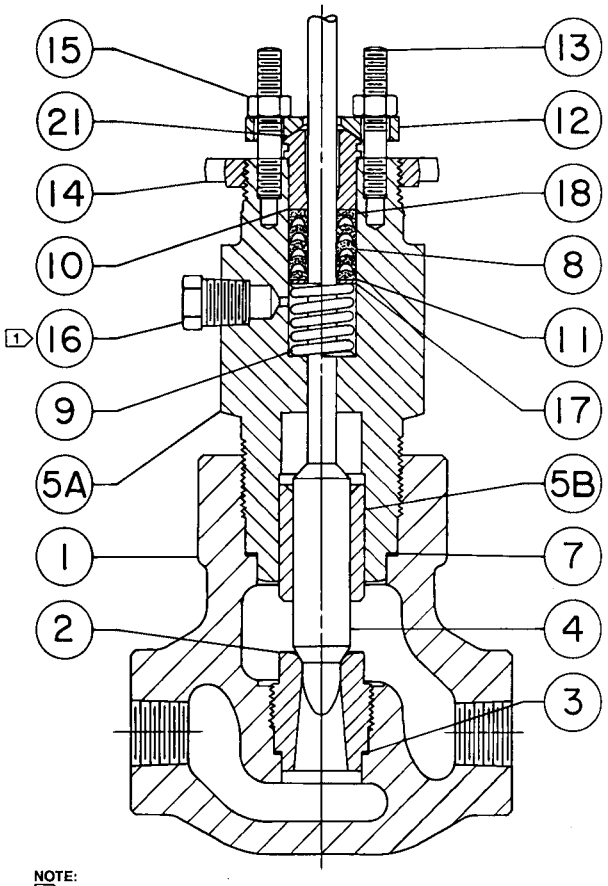

Figure 5. Fisher DA Angle-Style Valve

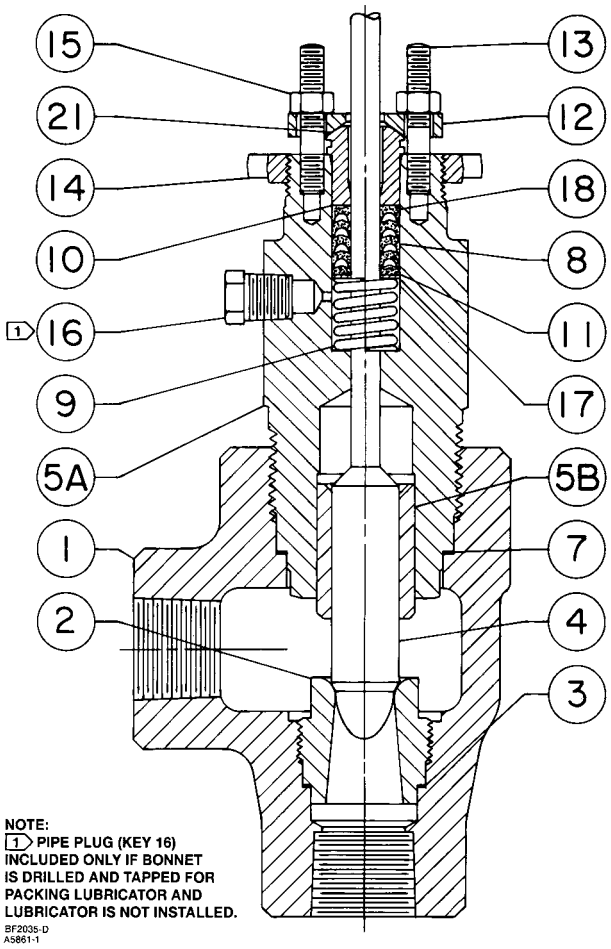

Fisher is a mark owned by one of the companies in the Emerson Process Management business division of Emerson Electric Co. Emerson Process Management, Emerson, and the Emerson logo are trademarks and service marks of Emerson Electric Co. All other marks are the property of their respective owners.

The contents of this publication are presented for informational purposes only, and while every effort has been made to ensure their accuracy, they are not to be construed as warranties or guarantees, express or implied, regarding the products or services described herein or their use or applicability. All sales are governed by our terms and conditions, which are available upon request. We reserve the right to modify or improve the designs or specifications of such products at any time without notice. Neither Emerson, Emerson Process Management, nor any of their affiliated entities assumes responsibility for the selection, use or maintenance of any product. Responsibility for proper selection, use, and maintenance of any product remains solely with the purchaser and end user.

Emerson Process Management
Marshalltown, Iowa 50158 USA
Sorocaba, 18087 Brazil
Chatham, Kent ME4 4QZ UK
Dubai, United Arab Emirates
Singapore 128461 Singapore

www.Fisher.com

©Fisher Controls International LLC 1991, 2011; All Rights Reserved

Fisher® D and DA Control Valves

Fisher D and DA single-port, high-pressure valves are widely used in oil and gas production industries. These valves are especially useful for either throttling or on/off control of liquids or gases which are gritty, sticky, or which have a tendency to build up on internal valve parts. The DA valve is also useful in angle piping or other applications where a self-draining valve is desired.

Unless otherwise noted, all NACE references are to NACE MR0175-2002.



W7859-1

Fisher D Valve with 657 Actuator

Features

- **Heavy-Duty Construction—**Massive guiding (figure 1) positively aligns the valve plug in the seat ring for high pressure drop applications. The screwed-in seat ring completely encloses the seat ring gasket.
- **Easy Maintenance—**Screwed bonnet/body joint allows repair or maintenance with a minimum of tools.
- **Severe Service Capability—**Valve is available with VTC (ceramic) trim for service in very erosive applications. The valve plug is also available with a tungsten carbide tip and the seat ring can be fitted with a full-bore tungsten carbide insert for erosive service.
- **Meets Variety of Specifications—**Valve body and end connection constructions are available for API as well as ASME standards.
- **NACE Trim Standard—**NACE trim and bolting materials are standard for all applications. These materials comply with the requirements of NACE MR0175-2002.

Specifications

Available Configurations

D: Globe valve with screwed-on bonnet, unbalanced post-guided valve plug, screwed-in seat ring, metal seat construction, and push-down-to-close valve plug action
DA: Same as D valve except in angle configuration (figure 1)

Valve Sizes and End Connections(1)

See table 1

Maximum Inlet Pressures and Temperatures(1)(2)

See table 2

Maximum Allowable Pressure Drops(2)

Flow up: Capable of full rated pressure drops
Flow down: See table 3 for pressure drop limits for ceramic trim

Shutoff Classification per ANSI/FCI 70-2 and IEC 60534-4

Standard: Class IV leakage
Optional: Class V

Material Temperature Capabilities

-46 to 232°C (-50 to 450°F)

Construction Materials

Body, Bonnet, and Trim: See table 4
Packing:
Standard: ■ Single or ■ double PTFE V-ring packing for pressure service
Optional: Double PTFE/Composition
Standard Gaskets: S31600 (316 SST)

Flow Characteristic

Equal percentage

Flow Direction (see figure 1)

D: Flow up (through seat ring and past valve plug)
DA: ■ Flow up (through seat ring and past valve plug) or ■ flow down (past valve plug and through seat ring)

Flow Coefficients and Noise Level Prediction

See table 5 or Fisher Catalog 12

Port, Yoke Boss, Stem Diameters, and Rated Travels

See table 6

Approximate Weights

NPS 1: 34 kg (75 pounds)
NPS 2: 45 kg (100 pounds)

Options

■ Lubricator/isolating valve ■ VTC (ceramic) Trim with equal percentage characteristic (not available with Micro-Flute trim) ■ Tungsten Carbide trim (not available with Micro-Flute trim)

1. EN (or other) ratings and end connections can usually be supplied; consult your Emerson Process Management sales office.
2. The pressure/temperature limits in this bulletin and in any applicable standard limitations should not be exceeded.

Contents

Features 1
Specifications 2
Tables
Valve Sizes, Port Diameters, and End Connections . 3
Rated Inlet Pressures and Temperatures 3
Flow Down Pressure Drop Limits-Ceramic Trim Only 3
Materials for Standard Trim Constructions 3
Flow Coefficient (C_V at Maximum Valve Plug Travel) 4
Port, Yoke Boss, Stem Diameters, and Rated Travel Specifications 4
Installation 5
Ordering Information 5
Dimensions 6

Table 1. Valve Sizes, Port Diameters, and End Connections

VALVE SIZE, NPS	PORT DIAMETER (INCHES)	SCREWED VALVE BODIES				FLANGED VALVE BODIES			
						ASME			API
		3600 psi	6000 psi	9000 psi (WCC Steel DA Only)	10,000 psi (Except WCC Steel DA)	CL150 through CL600	CL900 and CL1500	CL2500	10,000 lb. Spec A and C
1	0.25, 0.375, 0.5, 0.75	X[1]	X	---	---	X	X	X	---
2	0.25, 0.375, 0.5, 0.75, 1, 1.25	X	X	X	X	X	X	X	X

1. `X' indicates available construction.

Table 2. Rated Inlet Pressures and Temperatures

VALVE SIZE, NPS	TYPE	PRESSURE RATING OR COLD WORKING PRESSURE LIMIT	PRESSURE[1]		TEMPERATURE	
			bar	psi	°C	°F
1 or 2	Screwed	CL900 and 1500	259 236	3750 3425	38 232	100 450
		CL2500	431 394	6250 5710	38 232	100 450
		9000	621	9000	38	100
		10,000	689	10,000	38	100
1 or 2	Flanged	CL150	20.0 12.8	290 185	38 232	100 450
		CL300	51.7 47.2	750 685	38 232	100 450
		CL600	103.4 94.5	1500 1370	38 232	100 450
		CL900 and 1500	259 236	3750 3425	38 232	100 450
		CL2500	431 394	6250 5710	38 232	100 450
		API 10,000	689 689	Spec A 10,000 Spec C 10,000	121 121	250 250

1. LCC steel body per ASME B16.34 except C5 steel for all API bodies.

Table 3. Flow Down Pressure Drop Limits - Ceramic Trim Only

VALVE SIZE, NPS	SEAT RING DIAMETER, mm (INCHES)					
	6.4 (0.25)	9.5 (0.375)	12.7 (0.5)	19.1 (0.75)	25.4 (1)	31.8 (1.25)
	Pressure Drop, bar					
1	414	414	414	193	---	---
2	689	689	689	462	262	165
	Pressure Drop, psi					
1	6000	6000	6000	2800	---	---
2	10,000	10,000	10,000	6700	3800	2400

Table 4. Materials for Standard Trim Constructions

VALVE MATERIAL	BONNET MATERIAL	PLUG AND SEAT RING	VALVE STEM
LCC	LF2	S31600 (316 stainless steel) hard faced with CoCr-A (Alloy 6)	S20910
WCC			

Table 5. Flow Coefficient (C_v at Maximum Valve Plug Travel)

VALVE SIZE, NPS	PORT DIAMETER, mm (INCHES)	EQUAL PERCENTAGE D	EQUAL PERCENTAGE DA
		Flow Up	Flow Down
1	6.4 (0.25) 9.5 (0.375) 12.7 (0.5) 19.1 (0.75)	1.66 4.03 6.51 12.3	3.21 7.06 11.2 16.8
2	6.4 (0.25) 9.5 (0.375) 12.7 (0.5) 19.1 (0.75) 25.4 (1) 31.8 (1.25)	1.66 4.03 6.82 14.1 23.7 34.5	3.21 7.06 12.1 21.2 31.8 44.9

Table 6. Port, Yoke Boss, Stem Diameters, and Rated Travel Specifications in mm (Inches)

VALVE SIZE, NPS	PORT DIAMETER	STANDARD			OPTIONAL		
		Yoke Boss Diameter	Stem Diameter	Rated Travel	Yoke Boss Diameter	Stem Diameter	Rated Travel
1	6.4 (0.25) 9.5 (0.375) 12.7 (0.5) 19.1 (0.75)	54 (2-1/8)	9.5 (3/8)	19.1 (0.75)	71 (2-13/16)	12.7 (1/2)	19.1 (0.75)
					90 (3-9/16)	19.1 (3/4)	19.1 (0.75)
2	6.4 (0.25) 9.5 (0.375) 12.7 (0.5) 19.1 (0.75) 25.4 (1) 31.8 (1.25)	71 (2-13/16)	12.7 (1/2)	19.1 (0.75)	90 (3-9/16)	19.1 (3/4)	19.1 (0.75)

Figure 1. Typical Constructions

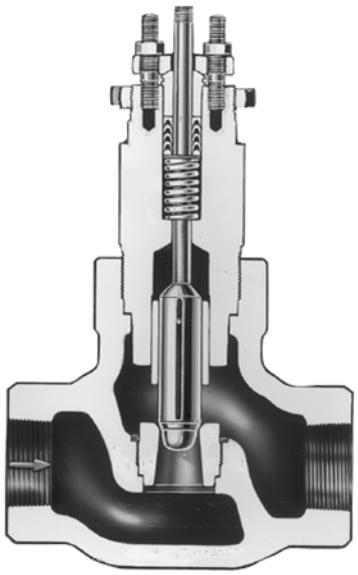

W0540-2

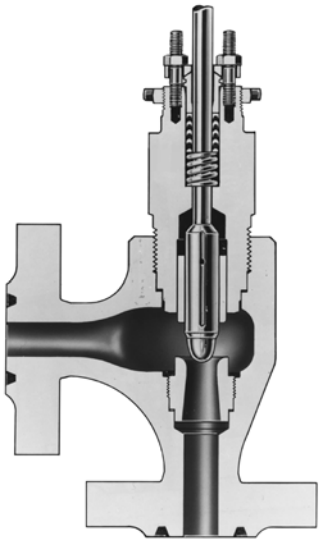

W0938-2

Installation

Valve orientation of the D and DA does not affect operation, but to facilitate changing trim parts, the valve stem should be vertical with the actuator above the valve. Proper flow direction is indicated by the arrow on the valve.

Dimensions are shown in figures 2 and 3.

Ordering Information

When ordering, specify:

Application

1. Type of application
   a. Throttling or on-off
   b. Reducing or relief
2. Controlled fluid (include chemical analysis of fluid, if possible)
3. Specific gravity of controlled fluid
4. Fluid temperature
5. Range of flowing inlet pressure
6. Pressure drops
   a. Range of flowing pressure drops
   b. Maximum at shutoff
7. Flow rates
   a. Minimum controlled flow
   b. Normal flow
   c. Maximum flow
8. Maximum permissible noise level, if critical
9. Shutoff classification required
10. Line size and schedule

Valve

Refer to the specifications. Review the description for each specification. Indicate the desired choice whenever there is a selection (■) to be made. Always indicate the valve body design being ordered as identified in the available configuration specification.

Actuator and Accessories

Refer to separate bulletins covering actuators and accessories for ordering information.

Table 7. Fisher D Dimensions

FLANGED VALVE SIZE, NPS	ASME								D--All Ratings		
	CL150		CL300			CL600			Stem Size		
	A-Raised Face	G	A		G	A		G	9.5 (3/8)	12.7 (1/2)	19.1 (3/4)
			Raised Face	Ring-Type Joint		Raised Face	Ring-Type Joint				
	mm										
1	206	46	219	232	46	232	232	46	173	192	179
2	267	70	267	---	70	286	289	70	---	217	213
	Inches										
1	8.12	1.81	8.62	9.12	1.81	9.12	9.12	1.81	6.81	7.56	7.06
2	10.50	2.75	10.50	---	2.75	11.25	11.38	2.75	---	8.56	8.38

Table 8. Fisher D Dimensions

FLANGED VALVE SIZE, NPS	ASME						API			D--All Ratings		
	CL900 and 1500			CL2500			10,000 lb.			Stem Size		
	A		G	A		G	A		G	9.5 (3/8)	12.7 (1/2)	19.1 (3/4)
	Raised Face	Ring-Type Joint		Raised Face	Ring-Type Joint		Spec A	Spec C				
	mm											
1	254	254	46	308	308	54	---	---	---	173	192	179
2	308	311	70	391	394	83	364	360	83	---	217	213
	Inches											
1	10.00	10.00	1.81	12.12	12.12	2.12	---	---	---	6.81(1)	7.56(1)	7.06(1)
2	12.12	12.25	2.75	15.38	15.50	3.25	14.34	14.19	3.25	---	8.56	8.38

1. Not applicable for 10,000 lb. API.

Table 9. Fisher D Dimensions

SCREWED VALVE SIZE, NPS	3600 psi		6000 psi and 9000 psi		D--All Ratings		
					Stem Size		
	A	G	A	G	9.5 (3/8)	12.7 (1/2)	19.1 (3/4)
	mm						
1(1)	168	46	197	54	172	192	178
2	229	70	267	83	---	216	211
	Inches						
1(1)	6.62	1.81	7.75	2.12	6.75	7.50	7.00
2	9.00	2.75	10.50	3.25	---	8.50	8.31

1. For 3600 psi and 6000 psi only.

Figure 2. Fisher D Dimensions (also see tables 7, 8, and 9)

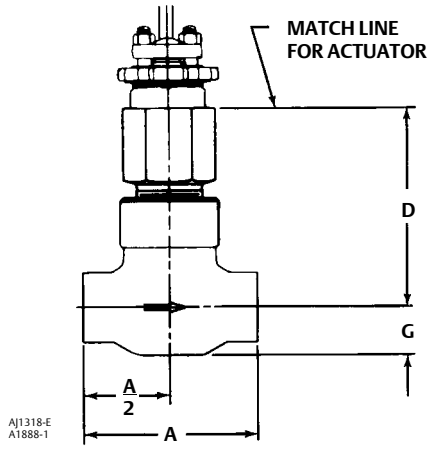

Table 10. Fisher DA Dimensions

FLANGED VALVE SIZE, NPS	A and G				D--All Ratings		
	ASME						
	CL300		CL600		Stem Size		
	Raised Face	Ring-Type Joint	Raised Face	Ring-Type Joint	9.5 (3/8)	12.7 (1/2)	19.1 (3/4)
	mm						
1	109	116	116	116	135	154	141
2	155	164	165	167	---	164	159
	Inches						
1	4.31	4.56	4.56	4.56	5.31	6.06	5.56
2	6.12	6.44	6.50	6.56	---	6.44	6.25

Table 11. Fisher DA Dimensions

FLANGED VALVE SIZE, NPS	A and G						D--All Ratings		
	ASME				API				
	CL900 and 1500		CL2500		10,000 lb.		Stem Size		
	Raised Face	Ring-Type Joint	Raised Face	Ring-Type Joint	Spec A	Spec C	9.5 (3/8)	12.7 (1/2)	19.1 (3/4)
	mm								
1	127	127	154	154	---	---	135	154	141
2	178	179	195	197	182	180	---	164	159
	Inches								
1	5.00	5.00	6.06	6.06	---	---	5.31	6.06	5.56
2	7.00	7.06	7.69	7.75	7.17	7.09	---	6.44	6.25

Table 12. Fisher DA Dimensions

SCREWED VALVE SIZE, NPS	3600 psi		6000 psi and 9000 psi		D--All Ratings		
					Stem Size		
	A	G	A	G	9.5 (3/8)	12.7 (1/2)	19.1 (3/4)
	mm						
1(1)	76	89	89	102	133	152	140
2	102	124	114	130	---	162	157
	Inches						
1(1)	3.00	3.50	3.50	4.00	5.25	6.00	5.50
2	4.00	4.88	4.50	5.12	---	6.38	6.19

1. For 3600 psi and 6000 psi only.

Figure 3. Fisher DA Dimensions (also see tables 10, 11, and 12)

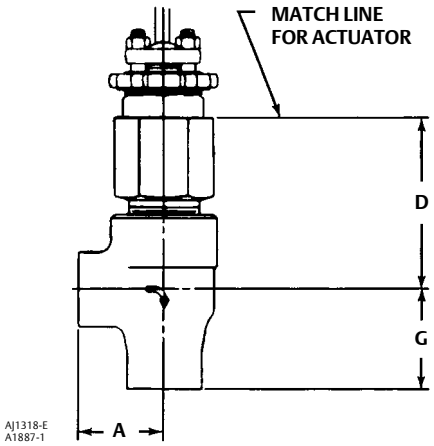

Neither Emerson, Emerson Process Management, nor any of their affiliated entities assumes responsibility for the selection, use or maintenance of any product. Responsibility for proper selection, use, and maintenance of any product remains solely with the purchaser and end user.

Fisher is a mark owned by one of the companies in the Emerson Process Management business unit of Emerson Electric Co. Emerson Process Management, Emerson, and the Emerson logo are trademarks and service marks of Emerson Electric Co. All other marks are the property of their respective owners.

The contents of this publication are presented for informational purposes only, and while every effort has been made to ensure their accuracy, they are not to be construed as warranties or guarantees, express or implied, regarding the products or services described herein or their use or applicability. All sales are governed by our terms and conditions, which are available upon request. We reserve the right to modify or improve the designs or specifications of such products at any time without notice.

Emerson Process Management
Marshalltown, Iowa 50158 USA
Sorocaba, 18087 Brazil
Chatham, Kent ME4 4QZ UK
Dubai, United Arab Emirates
Singapore 128461 Singapore

www.Fisher.com

© 1991, 2014 Fisher Controls International LLC. All rights reserved.

Fisher® FIELDVUE™ DVC6200 Series Digital Valve Controllers

Contents

Before You Begin 2

Step 1. Install the DVC6200 on the Valve 3
Step 2. Connect the Pneumatic Tubing 15
Step 3. Connect the Electrical Wires 19
Step 4. Configure the DVC6200 29

Special Instructions for Safety Instrumented Systems 31
Hazardous Area Approvals and Special Instructions for "Safe Use"and Installations in Hazardous Locations 39



W9713

This quick start guide provides installation and initial setup information for DVC6200 Series digital valve controllers

HART COMMUNICATION PROTOCOL SIS FOUNDATION PROFIBUS

FISHER

EMERSON Process Management

Before You Begin

Do not install, operate, or maintain a DVC6200 digital valve controller without being fully trained and qualified in valve, actuator, and accessory installation, operation, and maintenance. To avoid personal injury or property damage, it is important to carefully read, understand, and follow all contents of this quick start guide, including all safety cautions and warnings. Refer to Hazardous Area Approvals and Special Instructions for "Safe Use" and Installations in Hazardous Locations, on page 39, for approval specific safe use information. If you have any questions about these instructions, contact your Emerson Process Management sales office before proceeding.

⚠ WARNING

Avoid personal injury or property damage from sudden release of process pressure or bursting of parts. Before proceeding with any Installation procedures:

- **Always wear protective clothing, gloves, and eyewear to prevent personal injury or property damage.**
- **Do not remove the actuator from the valve while the valve is still pressurized.**
- **Disconnect any operating lines providing air pressure, electric power, or a control signal to the actuator. Be sure the actuator cannot suddenly open or close the valve.**
- **Use bypass valves or completely shut off the process to isolate the valve from process pressure. Relieve process pressure from both sides of the valve.**
- **Use lock-out procedures to be sure that the above measures stay in effect while you work on the equipment.**
- **Check with your process or safety engineer for any additional measures that must be taken to protect against process media.**
- **Vent the pneumatic actuator loading pressure and relieve any actuator spring precompression so the actuator is not applying force to the valve stem; this will allow for the safe removal of the stem connector.**

⚠ WARNING

To avoid static discharge from the plastic cover when flammable gases or dust are present, do not rub or clean the cover with solvents. To do so could result in a spark that may cause the flammable gases or dust to explode, resulting in personal injury or property damage. Clean with a mild detergent and water only.

For information on installation and usage of DVC6200 Series digital valve controllers, visit the Fisher channel on YouTube and search for FIELDVUE.

http://www.youtube.com/user/FisherControlValve

Step 1—Install the DVC6200 on the Valve

If ordered as part of a control valve assembly, the factory will mount the digital valve controller on the actuator and calibrate the instrument. If you purchased the digital valve controller separately, you will need a mounting kit. The following procedures are general guidelines. See the instructions that come with the mounting kit for detailed information on mounting the digital valve controller to a specific actuator model.

CAUTION

The magnet assembly material has been specifically chosen to provide a long-term stable magnetic field.

However, as with any magnet, care must be taken when handling the magnet assembly. Another high powered magnet placed in close proximity (less than 25 mm) can cause permanent damage. Potential sources of damaging equipment include, but are not limited to: transformers, DC motors, stacking magnet assemblies.

General Guidelines for use of High Power Magnets with Positioners

Use of high power magnets in close proximity to any positioner which is operating a process should be avoided. Regardless of the positioner model, high power magnets can affect the positioner's ability to control the valve. Technicians should avoid the use of high power magnets in close proximity with any positioner.

Use of Magnetic Tools with the DVC6200

- **Magnetic Tip Screw Drivers – Magnetic tip screw drivers can be used to work on the DVC6200. However, they should not be brought in close proximity to the magnet assembly (located at the back of the instrument) during process operations.**
- **Calibrator Strap Magnets – These are high power magnets used to hold 4-20 mA calibrators. Normally, these calibrators would not be used while an instrument is controlling the process. High power magnets should be kept at least 15 cm (6 inches) from the DVC6200.**



Note

- The mounting instructions also apply to the DVC6215 remote mount feedback unit.
- As a general rule, do not use less than 60% of the magnet assembly travel range for full travel measurement. Performance will decrease as the assembly is increasingly subranged.
- The linear magnet assemblies have a valid travel range indicated by arrows molded into the piece. This means that the hall sensor (the center point of the channel on the back of the DVC6200 housing) has to remain within this range throughout the entire valve travel. The linear magnet assemblies are symmetrical. Either end may be up.
- The magnet assembly may be referred to as a magnetic array in user interface tools.
- Mounting the instrument vertically, with the vent at the bottom of the assembly, or horizontally, with the vent pointing down, is recommended to allow drainage of moisture that may be introduced via the instrument air supply.

For sliding-stem linear actuators up to 210 mm (8.25 inches) travel proceed to page 4

For sliding-stem linear actuators over 210 mm (8.25 inches) travel proceed to page 6

For GX actuators proceed to page 7

For Fisher rotary actuators proceed to page 11

For quarter-turn rotary actuators proceed to page 12

Sliding-Stem Linear Actuators Up to 210 mm (8.25 inches) Travel

1. Isolate the control valve from the process line pressure and release pressure from both sides of the valve body. Shut off all pressure lines to the actuator, releasing all pressure from the actuator. Use lock-out procedures to be sure that the above measures stay in effect while you work on the equipment.

Figure 1. Mounting Parts for Sliding-Stem Actuator with up to 210 mm (8.25 inches) Travel

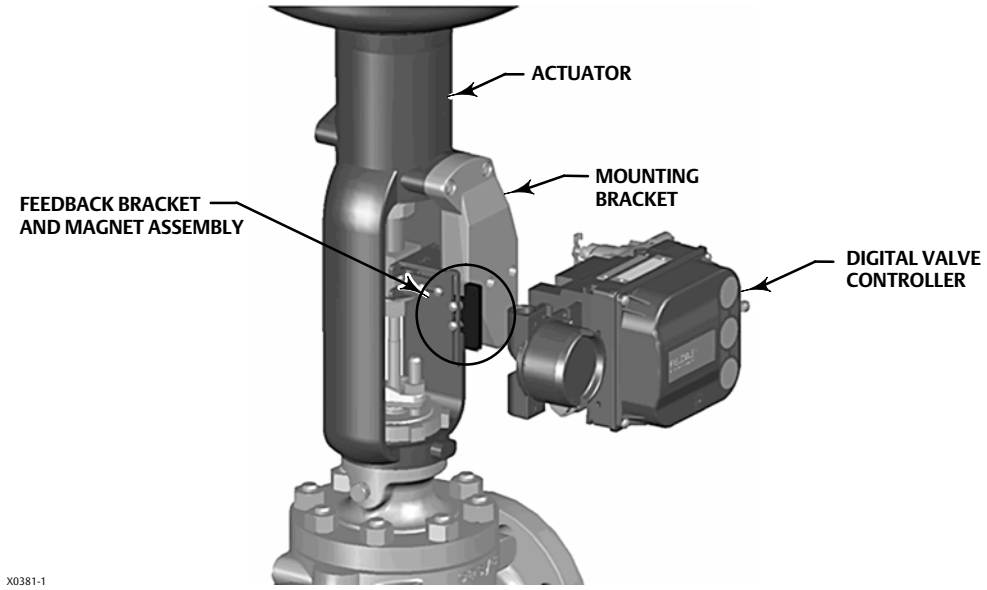

2. Attach the mounting bracket to the actuator.
3. Loosely attach the feedback pieces and magnet assembly to the valve stem connector. Do not tighten the fasteners because fine adjustment is required.

CAUTION

Do not install a magnet assembly that is shorter than the physical travel of the actuator. Loss of control will result from the magnet assembly moving outside the range of the index mark in the feedback slot of the DVC6200 housing.

4. Using the alignment template (supplied with the mounting kit), position the magnet assembly inside the retaining slot.
5. Align the magnet assembly as follows:
   - For air-to-open actuators (e.g. Fisher 667) vertically align the magnet assembly so that the center line of the alignment template is lined up as close as possible with the upper extreme of the valid travel range on the magnet assembly. The magnet assembly should be positioned so that the index mark in the feedback slot of the DVC6200 housing is within the valid range on the magnet assembly throughout the range of travel. See figure 2.

- For air-to-close actuators (e.g. Fisher 657) vertically align the magnet assembly so that the center line of the alignment template is lined up as close as possible with the lower extreme of the valid travel range on the magnet assembly. The magnet assembly should be positioned so that the index mark in the feedback slot of the DVC6200 housing is within the valid range on the magnet assembly throughout the range of travel. See figure 3.

Figure 2. Air-to-Open Magnet Assembly Alignment

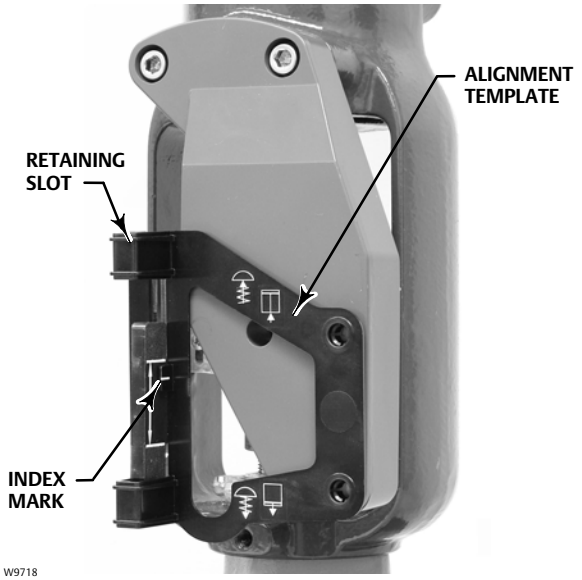

Figure 3. Air-to-Close Magnet Assembly Alignment

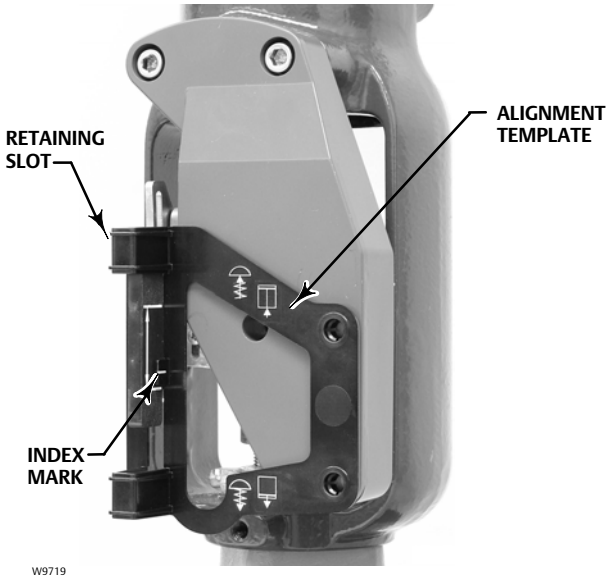

6. Tighten the fasteners and remove the alignment template.

Note

Use a flat end hex key to tighten the mounting assembly fasteners to a torque of 2.37 N•m (21 lbf•in) for 4 mm screws, and 5.08 N•m (45 lbf•in) for 5 mm screws. While tightening the fasteners using the hex key should be sufficient, blue (medium) thread locker may be used for additional security.

7. Mount the digital valve controller to the mounting bracket, using the mounting bolts.
8. Check for clearance between the magnet assembly and the DVC6200 feedback slot.

Note

Ensure that there is clearance between the magnet assembly and the DVC6200 housing slot throughout the full range of travel.

9. For remote mount applications, proceed to page 13 for DVC6205 base unit mounting. Otherwise, proceed to Step 2—Connect the Pneumatic Tubing on page 15.

Sliding-Stem Linear Actuators Over 210 mm (8.25 inches) Travel

1. Isolate the control valve from the process line pressure and release pressure from both sides of the valve body. Shut off all pressure lines to the pneumatic actuator, releasing all pressure from the actuator. Use lock-out procedures to be sure that the above measures stay in effect while working on the equipment.

Figure 4. Mounting on Sliding-Stem (Linear) Actuators over 210 mm (8.25 Inches) Travel

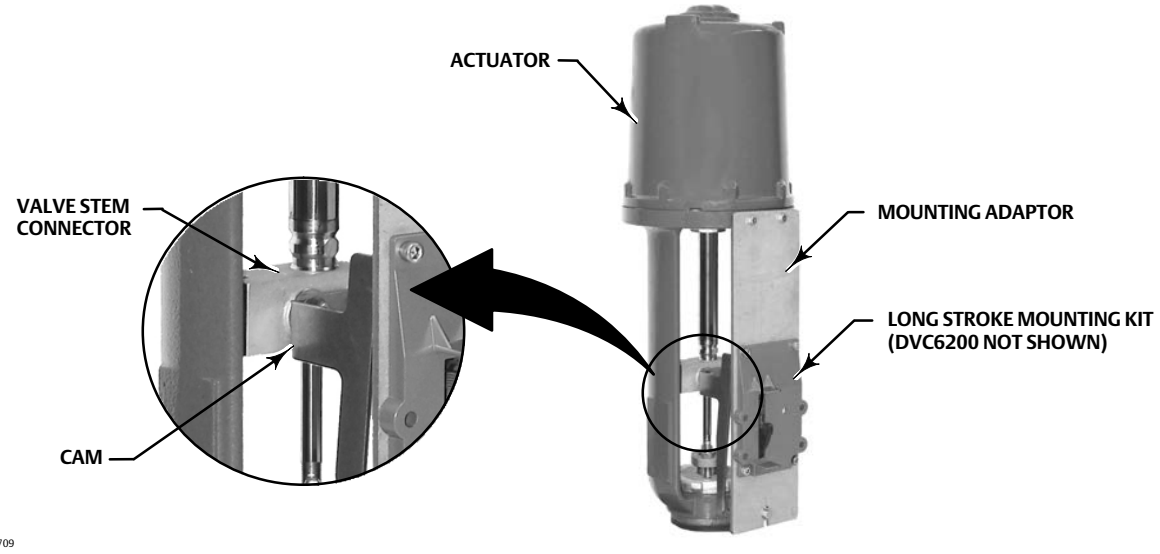

2. Install the cam to the valve stem connector as described in the instructions included with the mounting kit.
3. Install the mounting adaptor to the actuator.
4. Attach the digital valve controller and mounting kit assembly to the mounting adaptor. The roller on the digital valve controller feedback arm will contact the actuator cam as it is being attached.

Figure 5. Roller Arm Variation used for Sliding-Stem (Linear) Actuators over 210 mm (8.25 Inches) Travel

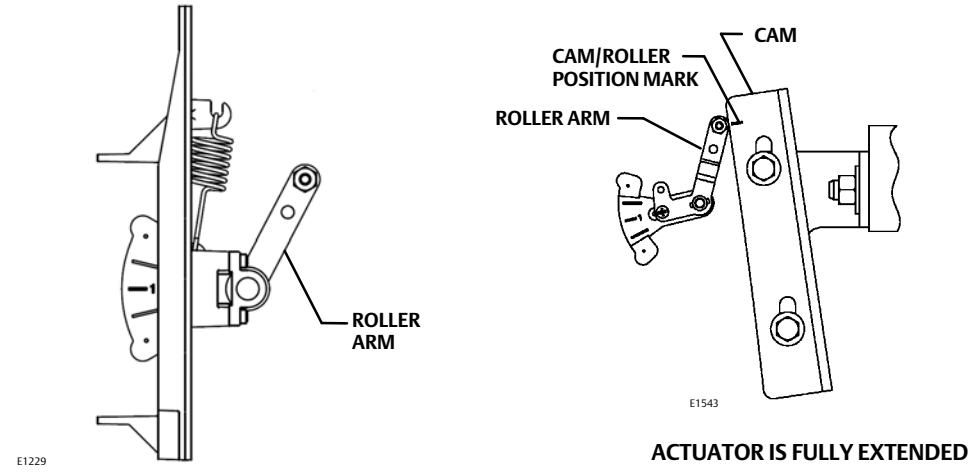

5. For remote mount applications, proceed to page 13 for DVC6205 base unit mounting. Otherwise, proceed to Step 2—Connect the Pneumatic Tubing on page 15.

Fisher GX Actuators

1. Isolate the control valve from the process line pressure and release pressure from both sides of the valve body. Shut off all pressure lines to the actuator, releasing all pressure from the actuator. Use lock-out procedures to be sure that the above measures stay in effect while you work on the equipment.
2. The DVC6200 digital valve controller mounts directly on the GX actuator without the need for a mounting bracket. Make sure you have the correct DVC6200 housing, identified by mounting bolt slots (not holes) below the output press sure port.

Figure 6. Housing Configuration for Fisher GX Actuators

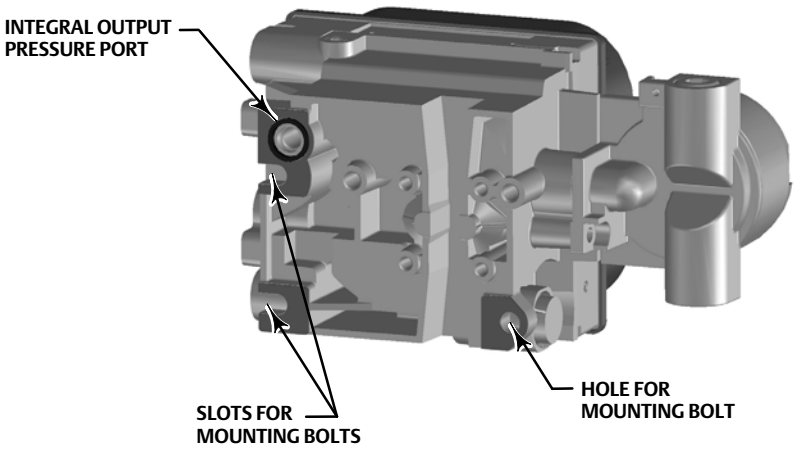

3. Identify the yoke side to mount the DVC6200 digital valve controller based on the actuator fail mode. Refer to the GX Control Valve and Actuator System instruction manual (D103175X012).
4. Loosely attach the feedback pieces and magnet assembly to the valve stem connector. Do not tighten the fasteners because fine adjustment is required.

CAUTION

Do not install a magnet assembly that is shorter than the physical travel of the actuator. Loss of control will result from the magnet assembly moving outside the range of the index mark in the feedback slot of the DVC6200 housing.

5. Using the alignment template (supplied with the mounting kit), position the feedback assembly inside the retaining slot.
6. Align the magnet assembly as follows:

For air-to-open GX actuators

Vertically align the magnet assembly so that the center line of the alignment template is lined up as close as possible with the upper extreme of the valid travel range on the magnet assembly. The magnet assembly should be positioned so that the index mark in the feedback slot of the DVC6200 housing is within the valid range on the magnet assembly throughout the range of travel. See figure 7.

Figure 7. Air-to-Open Fisher GX Magnet Assembly Alignment

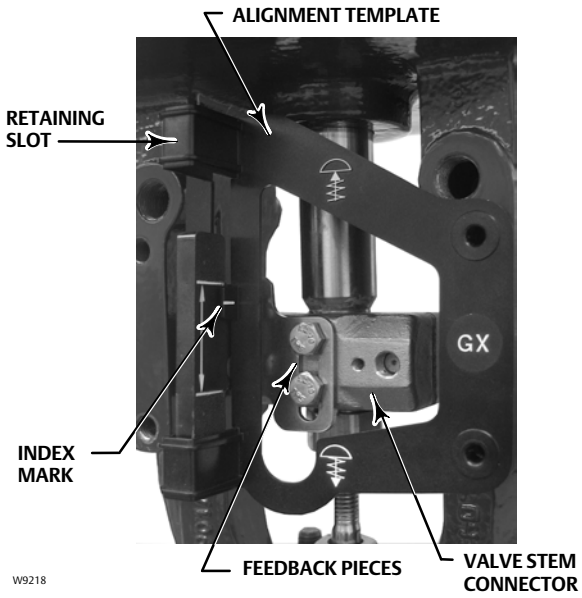

7. Tighten the fasteners and remove the alignment template.

Note

Use a flat end hex key to tighten the mounting assembly fasteners to a torque of 2.37 N•m (21 lbf•in) for 4 mm screws, and 5.08 N•m (45 lbf•in) for 5 mm screws. While tightening the fasteners using the hex key should be sufficient, blue (medium) thread locker may be used for additional security.

8. Remove the plug (R1/8) from the back of the DVC6200 housing. This pneumatic output port on the DVC6200 lines up with the integral GX actuator pneumatic port. See figure 8.

Figure 8. Modifications for Fisher GX Actuator; Air-to-Open Construction Only

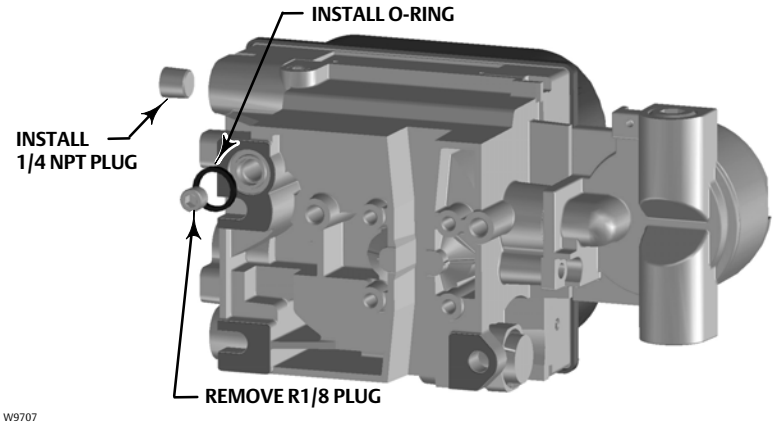

9. Install the plug (1/4 NPT, included in the mounting kit) to the external output pneumatic port A.
10. Using a 5 mm hex wrench, attach the digital valve controller to the GX actuator mounting pad on the side that has the open pneumatic port. Be sure to place the O-ring between the digital valve controller's pneumatic output and the actuator mounting pad. Pneumatic tubing is not required because the air passages are internal to the actuator.
11. Check for clearance between the magnet assembly and the DVC6200 feedback slot.
12. If not already installed, install a vent in the port on the upper diaphragm casing's air supply connection on the actuator yoke leg.
13. For remote mount applications, proceed to page 13 for DVC6205 base unit mounting. Otherwise, proceed to Step 2—Connect the Pneumatic Tubing on page 15.

For air-to-close GX actuators

Vertically align the magnet assembly so that the center line of the alignment template is lined up as close as possible with the lower extreme of the valid travel range on the magnet assembly. The magnet assembly should be positioned so that the index mark on the pole pieces (back of the DVC6200 housing) is within the valid range on the magnet assembly throughout the range of travel. See figure 9.

Figure 9. Air-to-Close Fisher GX Magnet Assembly Alignment

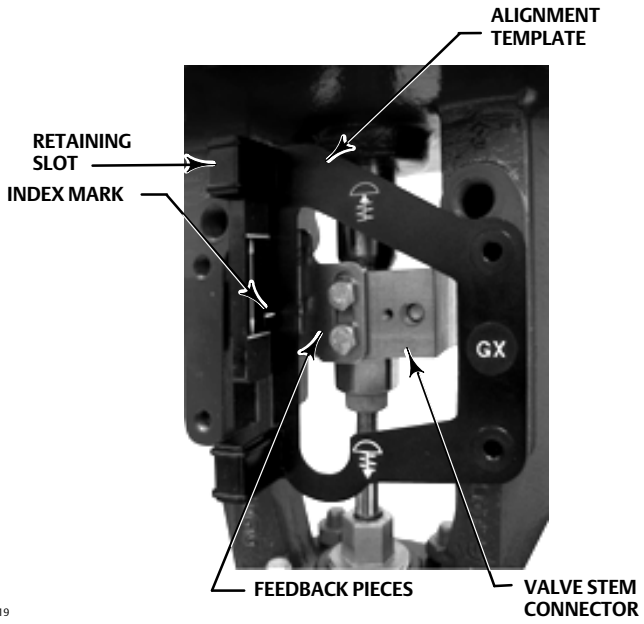

7. Tighten the fasteners and remove the alignment template.

Note

Use a flat end hex key to tighten the mounting assembly fasteners to a torque of 2.37 N•m (21 lbf•in) for 4 mm screws, and 5.08 N•m (45 lbf•in) for 5 mm screws. While tightening the fasteners using the hex key should be sufficient, blue (medium) thread locker may be used for additional security.

8. Using a 5 mm hex wrench, attach the digital valve controller to the GX actuator mounting pad.
9. Check for clearance between the magnet assembly and the DVC6200 feedback slot.
10. Install tubing between the actuator casing and the appropriate DVC6200 pneumatic output port.
11. If not already installed, install a vent in the port on the lower diaphragm casing.
12. For remote mount applications, proceed to page 13 for DVC6205 base unit mounting. Otherwise, proceed to Step 2—Connect the Pneumatic Tubing on page 15.

Note

When field converting a GX actuator from air-to-close to air-to-open (or vice-versa), you will need to change the plugs for the pneumatic passages in the DVC6200 housing.

- To convert to air-to-open, remove the R1/8 pneumatic plug on the back of the DVC6200 housing and install an O-ring. Plug the external pneumatic output with a 1/4 NPT plug. Refer to figure 8.
- To convert to air-to-close, remove the external pneumatic plug. Install an R1/8 plug on the back of the DVC6200 housing. Install tubing between the pneumatic output connection of the DVC6200 to the pneumatic port on top of the actuator casing.

Fisher Rotary Actuators

1. Isolate the control valve from the process line pressure and release pressure from both sides of the valve body. Shut off all pressure lines to the pneumatic actuator, releasing all pressure from the actuator. Use lock-out procedures to be sure that the above measures stay in effect while working on the equipment.

Figure 10. Mounting on Rotary Actuators

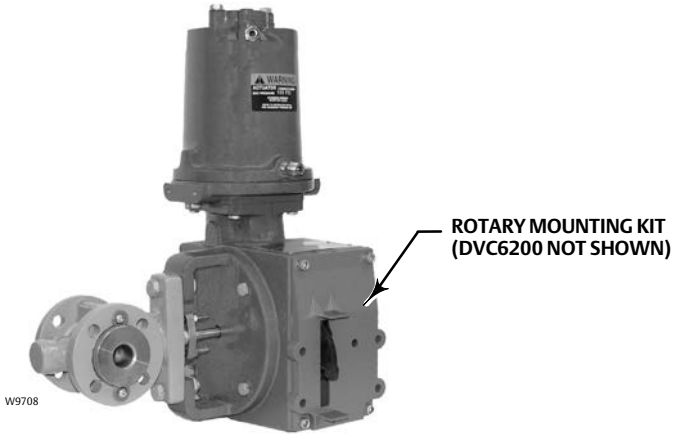

2. Verify that the appropriate cam is installed on the actuator as described in the instructions included with the mounting kit.

Figure 11. Rotary Actuator Mounting Variations

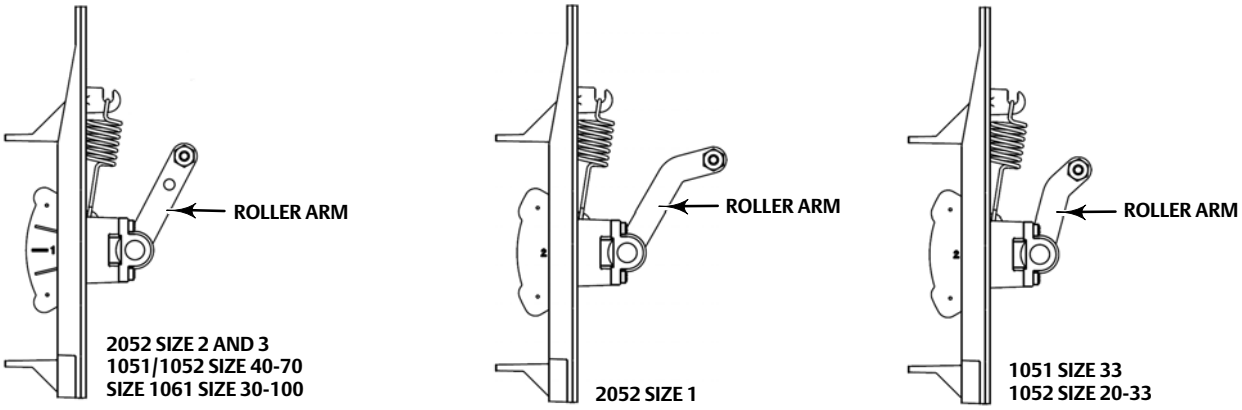

3. Mount the DVC6200 on the actuator as follows:
   - If required, a mounting adaptor is included in the mounting kit. Attach the adaptor to the digital valve controller, then attach the digital valve controller assembly to the actuator. The roller on the digital valve controller feedback arm will contact the actuator cam as it is being attached.
   - If no mounting adaptor is required, attach the digital valve controller and mounting kit assembly to the actuator. The roller on the digital valve controller feedback arm will contact the actuator cam as it is being attached.
4. For remote mount applications, proceed to page 13 for DVC6205 base unit mounting. Otherwise, proceed to Step 2—Connect the Pneumatic Tubing on page 15.

Quarter-Turn Rotary Actuators

The DVC6200 digital valve controller can be mounted to any quarter-turn rotary actuator, as well as those that comply with the NAMUR guidelines. A mounting bracket and associated hardware are required. Refer to figure 12.

1. Isolate the control valve from the process line pressure and release pressure from both sides of the valve body. Shut off all pressure lines to the actuator, releasing all pressure from the actuator. Use lock-out procedures to be sure that the above measures stay in effect while you work on the equipment.

Figure 12. Mounting on Quarter-Turn Actuators

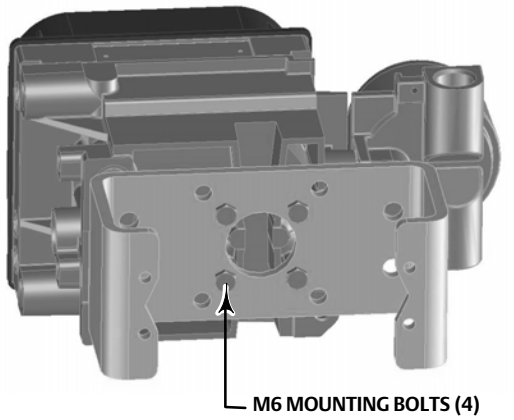

2. Attach the magnet assembly to the actuator shaft. At mid-travel, the flats on the magnet assembly should be approximately parallel to the channel on the back of the DVC6200 housing, as shown in figure 13.

Figure 13. Magnet Assembly Orientation on Quarter-Turn Actuators

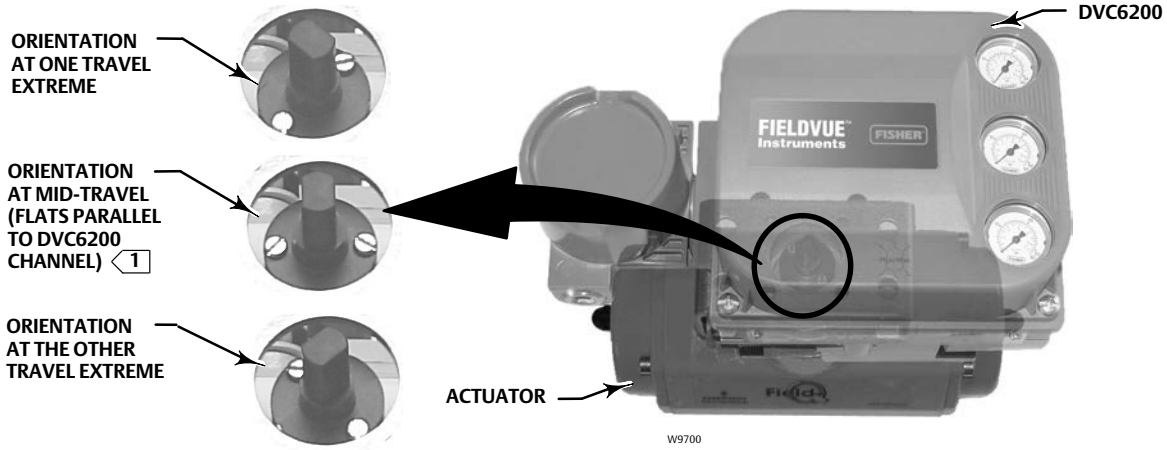

1 THIS EXAMPLE SHOWS AN ACTUATOR WITH 90° TRAVEL. ON AN ACTUATOR THAT HAS LESS THAN 90° TRAVEL THE MAGNET ASSEMBLY MAY NOT BE PARALLEL AT THE MID-TRAVEL POINT. TO VERIFY THE MAGNET ASSEMBLY POSITION IS IN WORKING RANGE, CONFIRM TRAVEL COUNTS ARE WITHIN THE EXPECTED RANGE OF 175-3800 USING VALVELINK SOFTWARE OR A FIELD COMMUNICATOR.

3. Install the mounting bracket on the actuator.
4. Attach the digital valve controller to the mounting bracket using the 4 mounting bolts, as shown in figure 12.
5. Check for clearance between the magnet assembly and the DVC6200 feedback slot.
6. For remote mount applications, proceed to page 13 for DVC6205 base unit mounting. Otherwise, proceed to Step 2—Connect the Pneumatic Tubing on page 15.

DVC6205 Remote Mount Base Unit Mounting

For remote-mounted digital valve controllers, the DVC6205 base unit ships separately from the control valve and does not include tubing, fittings or wiring.

Pipestand Mounting

1. Position a standoff on the back of the base unit.
2. Using two 101.6 mm (4-inch) 1/4-20 hex head screws loosely attach the base unit to the pipestand with the mounting bracket.
3. Position the second standoff, then using the remaining 101.6 mm (4-inch) hex head screws, securely fasten the base unit to the pipe stand.
4. Tighten all screws.
5. Proceed to Step 2—Connect the Pneumatic Tubing on page 15.

Figure 14. FIELDVUE DVC6205 Pipestand Mounting

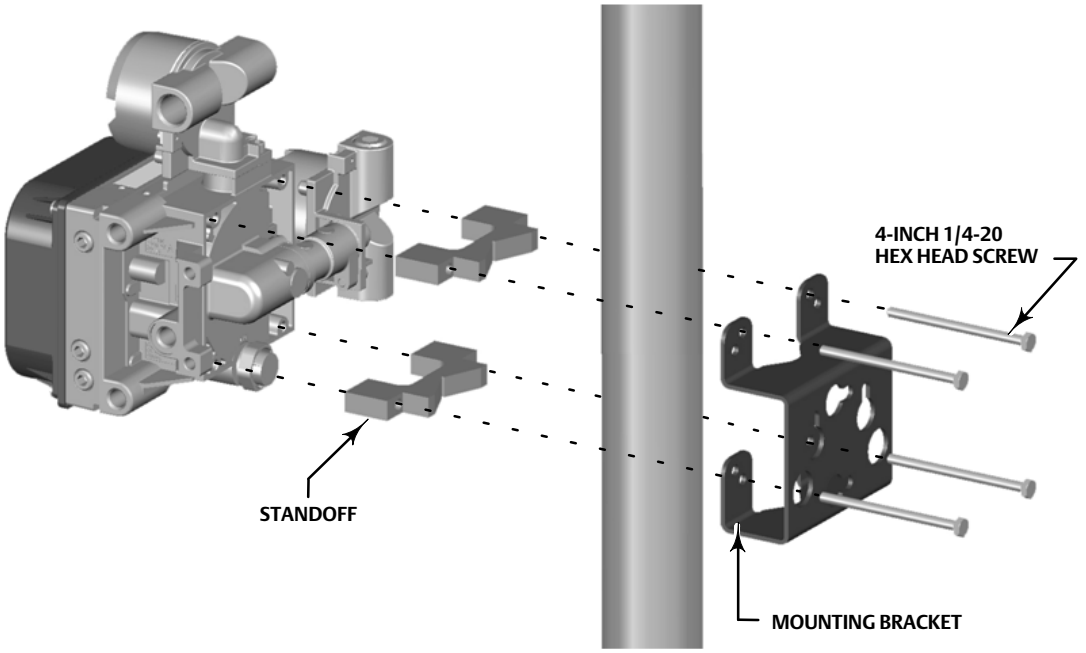

Wall Mounting

1. Install the wall mounting screws by using the mounting bracket as a template.
2. Install the mounting bracket to the back of the base unit using the spacers and screws provided in the mounting kit.
3. Slide the assembly on the wall mounting screws and tighten.
4. Proceed to Step 2—Connect the Pneumatic Tubing on page 15.

Figure 15. FIELDVUE DVC6205 Wall Mounting

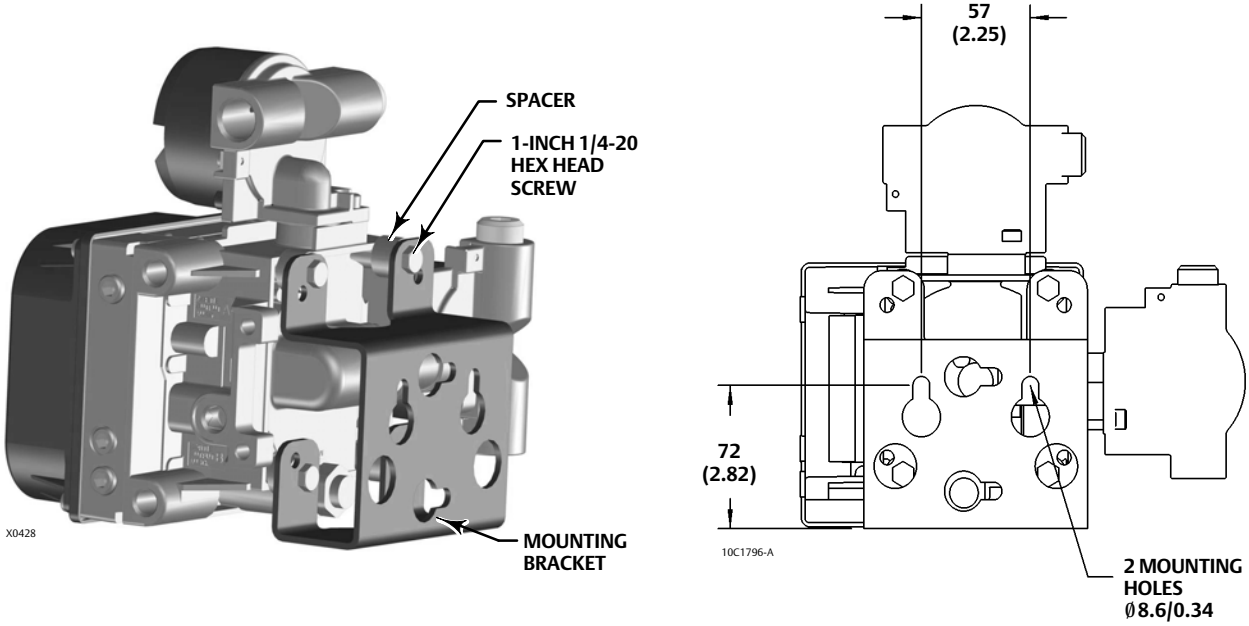

Step 2—Connect the Pneumatic Tubing

Figure 16. Integral Mounting of a Fisher 67CFR Regulator on a FIELDVUE DVC6200 Digital Valve Controller

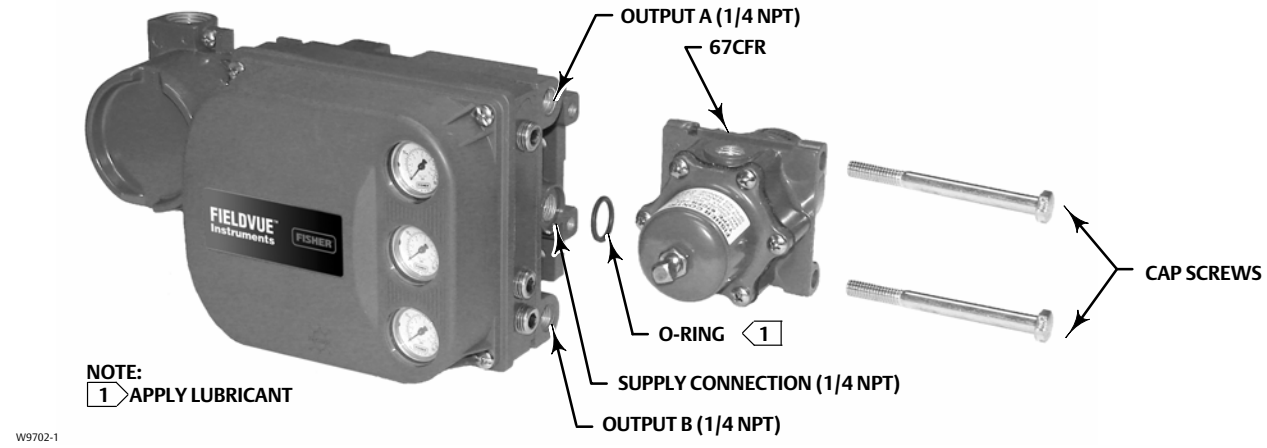

1. Connect the DVC6200 pneumatic output to the actuator input using at least 10 mm (3/8-inch) diameter tubing.
   - When using a single-acting direct digital valve controller (relay A or C) on a single-acting actuator, connect OUTPUT A to the actuator pneumatic input.
   - When using a single-acting reverse digital valve controller (relay B) on a single-acting actuator, connect OUTPUT B to the actuator diaphragm casing.
   - When using a double-acting digital valve controller (relay A) on a double-acting actuator, connect OUTPUT A and OUTPUT B to the appropriate actuator pneumatic input. With no input current to the DVC6200, OUTPUT A is at zero pressure and OUTPUT B is at full supply pressure when the relay is properly adjusted.

Note

To have the actuator stem extend from the cylinder with increasing input signal, connect OUTPUT A to the actuator cylinder connection farthest from the actuator stem. Connect OUTPUT B to the cylinder connection closest to the actuator stem. To have the actuator stem retract into the cylinder with increasing input signal, connect OUTPUT A to the actuator cylinder connection closest to the actuator stem. Connect OUTPUT B to the cylinder connection farthest from the actuator stem.

⚠ WARNING

Supply pressure must be clean, dry air that meets the requirements of ISA Standard 7.0.01.

Alternatively, natural gas must be clean, dry, oil-free, and noncorrosive. H2S content should not exceed 20 ppm.

Severe personal injury or property damage may occur from an uncontrolled process if the instrument supply medium is not clean, dry, oil-free, and noncorrosive. While use and regular maintenance of a filter that removes particles larger than 40 micrometers in diameter will suffice in most applications, further filtration down to 5 micrometer particle size is recommended. Lubricant content is not to exceed 1 ppm weight (w/w) or volume (v/v) basis. Condensation in the air supply should be minimized.

Check with an Emerson Process Management field office and industry instrument air quality standards for use with corrosive air or if you are unsure about the amount of air filtration or filter maintenance.

When using natural gas as the supply medium, or for explosion proof applications, the following warnings also apply:

- **Remove electrical power before removing the housing cap. Personal injury or property damage from fire or explosion may result if power is not disconnected before removing the cap.**
- **Remove electrical power before disconnecting any of the pneumatic connections.**
- **When disconnecting any of the pneumatic connections or any pressure retaining part, natural gas will seep from the unit and any connected equipment into the surrounding atmosphere. Personal injury or property damage may result from fire or explosion if natural gas is used as the supply medium and appropriate preventive measures are not taken. Preventive measures may include, but are not limited to, one or more of the following: ensuring adequate ventilation and the removal of any ignition sources.**
- **Ensure that all caps and covers are correctly installed before putting this unit back into service. Failure to do so could result in personal injury or property damage from fire or explosion.**

2. Connect a filter or filter regulator to the DVC6200 supply input using at least 10 mm (3/8-inch) diameter tubing.
   - When using an integral mounted 67CFR filter regulator, lubricate an O-ring and insert it in the recess around the SUPPLY connection on the digital valve controller. Attach the filter regulator to the side of the digital valve controller. Thread a 1/4-inch socket-head pipe plug into the unused outlet on the filter regulator. This is the standard method of mounting the filter regulator. No tubing is required.
   - When using a yoke mounted 67CFR filter regulator, mount the filter regulator with two cap screws to the pre-drilled and tapped holes in the actuator yoke. Thread a 1/4-inch socket-head pipe plug into the unused outlet on the filter regulator. No O-ring is required.
   - When using a casing mounted filter regulator, use a separate casing mounting bracket (typically provided with the filter regulator). Attach the mounting bracket to the filter regulator and then attach this assembly to the actuator casing. Thread a 1/4-inch socket-head pipe plug into the unused outlet on the filter regulator. No O-ring is required.
   - If the supply pressure is less than the maximum actuator and instrument pressure rating, a regulator is not required. However, a filter is always required. Attach the filter securely to the actuator or instrument.

⚠ WARNING

Personal injury or property damage can occur from cover failure due to overpressure. Ensure that the housing vent opening is open and free of debris to prevent pressure buildup under the cover.

This unit vents the supply medium into the surrounding atmosphere. When installing this unit in a non-hazardous (non-classified) location in a confined area, with natural gas as the supply medium, you must remotely vent this unit to a safe location. Failure to do so could result in personal injury or property damage from fire or explosion, and area re-classification.

When installing this unit in a hazardous (classified) location remote venting of the unit may be required, depending upon the area classification, and as specified by the requirements of local, regional, and national codes, rules and regulations. Failure to do so when necessary could result in personal injury or property damage from fire or explosion, and area re-classification.

In addition to remote venting of the unit, ensure that all caps and covers are correctly installed. Failure to do so could result in personal injury or property damage from fire or explosion, and area re-classification.

3. If necessary, remove the plastic vent on the DVC6200 and install a pipe-away vent line using at least 12.7 mm (1/2-inch) diameter tubing. The vent line must be as short as possible with a minimum number of bends and elbows to prevent back pressure build-up.

Figure 17. Vent Connection

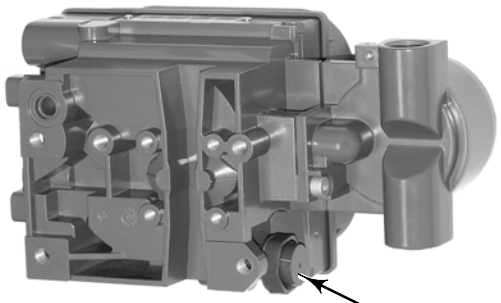

⚠ WARNING

To avoid personal injury or property damage resulting from bursting or parts, do not exceed maximum supply pressure.

Personal injury or property damage may result from fire or explosion if natural gas is used as the supply medium and appropriate preventive measures are not taken. Preventive measures may include, but are not limited to, one or more of the following: Remote venting of the unit, re-evaluating the hazardous area classification, ensuring adequate ventilation, and the removal of any ignition sources.

Note

The Natural Gas Certified, Single Seal device option simplifies conduit sealing requirements. Natural Gas Certified, Single Seal instruments can be identified by the natural gas approval label shown in figure 18. Read and follow all local, regional, and federal wiring requirements for natural gas installations. Contact your Emerson Process Management sales office for information on obtaining a Natural Gas Certified, Single Seal DVC6200 digital valve controller.

Figure 18. Label for Natural Gas Certified Terminal Box

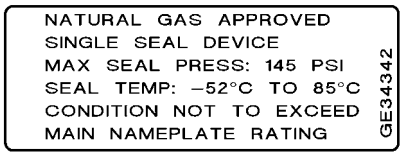

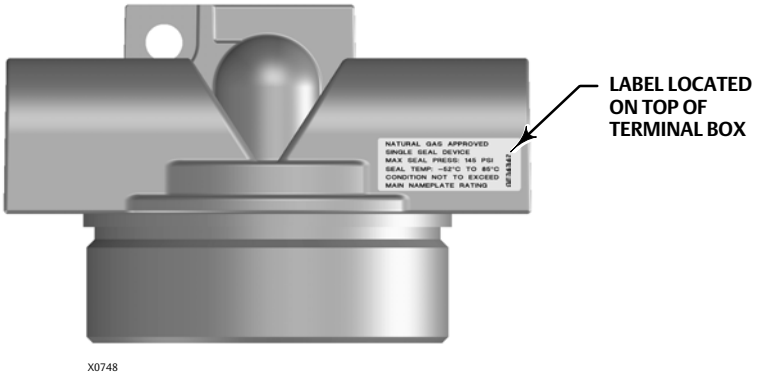

4. Connect the pneumatic supply line to the 1/4 NPT IN connection on the filter regulator.
5. Proceed to Step 3—Connect the Electrical Wires on page 19.

Step 3—Connect the Electrical Wires

⚠ WARNING

Select wiring and/or cable glands that are rated for the environment of use (such as hazardous area, ingress protection and temperature). Failure to use properly rated wiring and/or cable glands can result in personal injury or property damage from fire or explosion.

Wiring connections must be in accordance with local, regional, and national codes for any given hazardous area approval. Failure to follow the local, regional, and national codes could result in personal injury or property damage from fire or explosion.

To avoid personal injury resulting from electrical shock, do not exceed maximum input voltage specified on the product nameplate. If the input voltage specified differs, do not exceed the lowest specified maximum input voltage.

Personal injury or property damage caused by fire or explosion may occur if this connection is attempted in a potentially explosive atmosphere or in an area that has been classified as hazardous. Confirm that area classification and atmosphere conditions permit the safe removal of the terminal box cover before proceeding.

The valve may move in an unexpected direction when power is applied to the digital valve controller. To avoid personal injury and property damage caused by moving parts, keep hands, tools, and other objects away from the valve/actuator assembly when applying power to the instrument.

For FOUNDATION fieldbus™ or PROFIBUS PA devices proceed to page 20

For HART® devices proceed to page 22

FOUNDATION fieldbus or PROFIBUS PA Devices

Refer to the DVC6200f instruction manual (D103412X012) or the DVC6200p instruction manual (D103563X012), available at www.FIELDVUE.com or from your local Emerson Process Management sales office for additional information.

The digital valve controller is normally powered over the bus from a power supply. Refer to the FOUNDATION fieldbus or PROFIBUS site planning guide, available from your Emerson Process Management sales office, for proper wire types, termination, length, grounding practices, etc.

Note

To avoid the valve going to an unknown position when power is applied, the unit digital valve controller is shipped from the factory with the transducer block mode Out of Service.

Wire the digital valve controller as follows, refer to figure 19.

1. Remove the wiring terminal box cap.
2. Bring the field wiring into the terminal box. When applicable, install conduit using local and national electrical codes which apply to the application.
3. The instrument is not polarity sensitive. Connect one wire from the controller output to one of the LOOP screw terminals in the terminal box shown in figure 19. Connect the other wire from the controller output to the other LOOP screw terminal in the terminal box.

Figure 19. Loop Connections Terminal Box

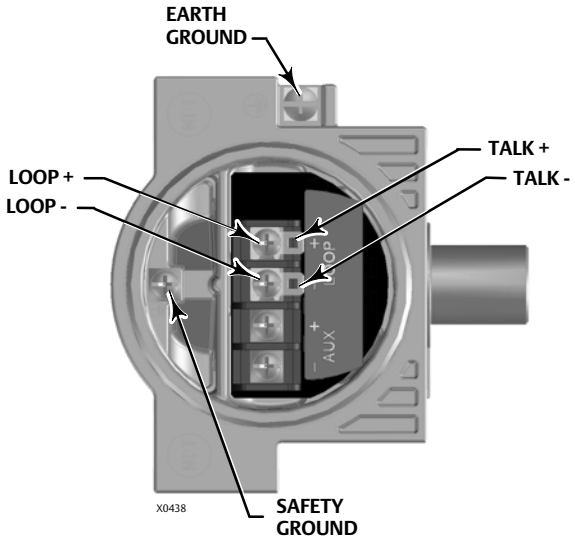

⚠ WARNING

Personal injury or property damage can result from the discharge of static electricity. Connect a 14 AWG (2.08 mm^2) ground strap between the digital valve controller and earth ground when flammable or hazardous gases are present. Refer to national and local codes and standards for grounding requirements.

4. Make connections to the ground terminal(s) following national and local codes and plant standards. As shown in figure 19, two ground terminals are available for connecting a safety ground, earth ground, or drain wire. The safety ground terminal is electrically identical to the earth ground.
5. Replace and hand tighten the cover on the terminal box.
6. Write the valve tag number on the top and bottom of the paper commissioning tag, as shown in figure 20.

Figure 20. Paper Commissioning Tag

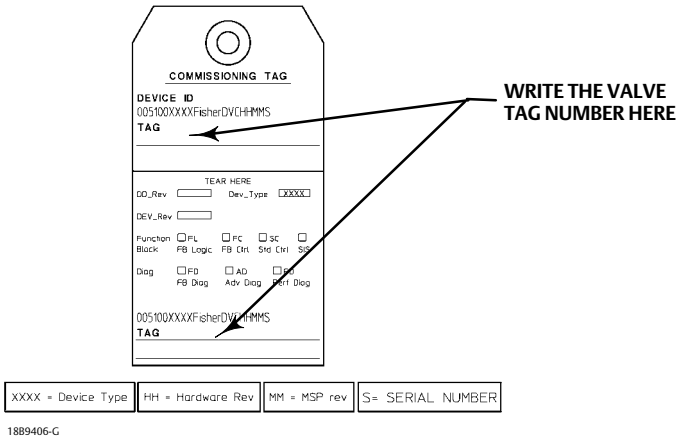

7. Remove the lower half of the paper commissioning tag and deliver it to the control system configurator. With the piece of paper, the control system configurator will be able to easily change the Device ID placeholder to the actual valve tag number.

Note

Alternatively, the valve tag number can be entered at the factory when specified at the time of order entry. When the valve tag number is electronically stored on the DVC6200, the control system will display the valve tag number instead of the Device ID. As a result, step 6 and 7 will not be required.

8. For Remote Mount applications, proceed to page 26. Otherwise proceed to Step 4—Configure the Digital Valve Controller on page 29.

HART Devices

HART COMMUNICATION PROTOCOL	SIS

Refer to the DVC6200 HW1 instruction manual (D103409X012), the DVC6200 HW2 instruction manual (D103605X012), or the DVC6200 SIS instruction manual (D103557X012) available at www.FIELDVUE.com or from your local Emerson Process Management sales office for additional information.

The digital valve controller is normally powered by a control system output channel. Shielded cable will ensure proper operation in electrically noisy environments.

Wire the digital valve controller as follows, refer to figure 21:

1. Remove the wiring terminal box cap.
2. Bring the field wiring into the terminal box. When applicable, install conduit using local and national electrical codes which apply to the application.
3. Connect the control system output channel positive wire to the LOOP + screw terminal in the terminal box. Connect the control system output channel negative (or return) wire to the LOOP - screw terminal in the terminal box.

⚠ WARNING

Personal injury or property damage, caused by fire or explosion, can result from the discharge of static electricity. Connect a 14 AWG (2.08 mm^2) ground strap between the digital valve controller and earth ground when flammable or hazardous gases are present. Refer to national and local codes and standards for grounding requirements.

4. As shown in figure 21, two ground terminals are available for connecting a safety ground, earth ground, or drain wire. The safety ground is electrically identical to the earth ground. Make connections to these terminals following national and local codes and plant standards.

Figure 21. Loop and Talk Connections

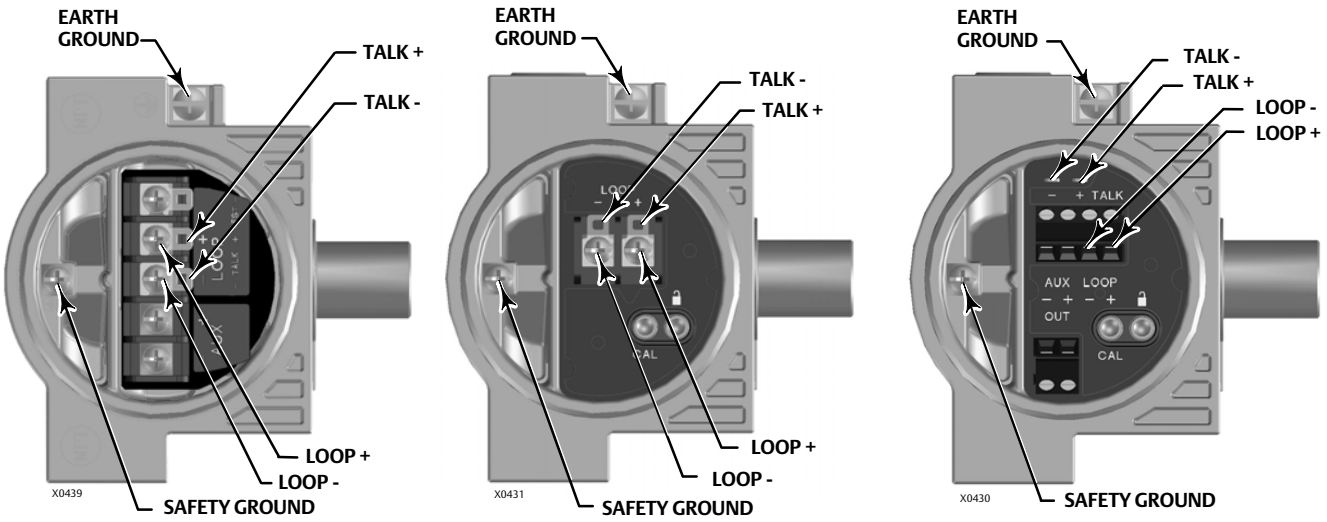

Note

Depending on the control system you are using, an HF340 HART filter may be needed to allow HART communication. The HART filter is a passive device that is inserted in field wiring from the HART loop. The filter is normally installed near the field wiring terminals of the control system I/O. Its purpose is to effectively isolate the control system output from modulated HART communication signals and raise the impedance of the control system to allow HART communication. For more information on the description and use of the HART filter, refer to the HF340 HART filter instruction manual (D102796X012). To determine if your system requires a HART filter refer to the DVC6200 HW1 instruction manual (D103409X012), the DVC6200 HW2 instruction manual (D103605X012), or the DVC6200 SIS instruction manual (D103557X012) or contact your Emerson Process Management sales office.

5. Replace and hand tighten the cover on the terminal box.
6. For applications that require a Position Transmitter or Discrete Switch (page 24), Remote Feedback Mounting (page 26), and/or THUM™ Adapter (page 28), proceed to the appropriate page. For DVC6200 SIS applications proceed to Special Instructions for Safety Instrumented Systems on page 31. Otherwise, proceed to Step 4—Configure the Digital Valve Controller on page 29.

HART	SIS

Position Transmitter or Discrete Switch

The DVC6200 HART communicating device has an optional output circuit that can be configured as a 4-20 mA position transmitter or a discrete switch. Configuration of the output circuit requires the proper DIP switch electrical setting on the main electronics board (figure 22) and also must be enabled with a user interface tool. The DIP switch electrical setting is preconfigured at the factory when ordered properly.

Figure 22. OUTPUT Connections and Transmitter / Switch Settings

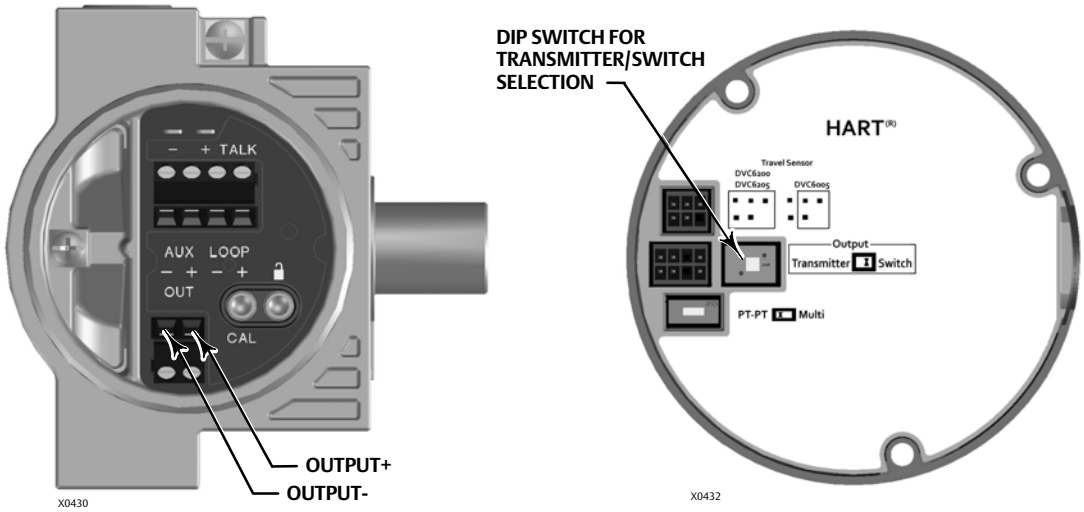

The position transmitter circuit derives its operating power from the control system input channel in the same manner as a 2-wire transmitter. The position transmitter circuit operates independently from the digital valve controller.

The discrete switch is a solid state circuit (1-amp maximum) which opens and closes based on a user configurable trip point. The trip point can be based on valve travel anywhere within the calibrated travel range, or based on a device alert. In order for the switch output to function, the digital valve controller must be powered. If power is lost, the switch will always go to the open state. The output circuit, whether operating as a transmitter or switch, is galvanically isolated from the position control loop circuit such that different ground references between the 2 circuits are allowed.

Wire the OUTPUT terminals as follows (refer to figure 23):

1. Route the field wiring into the terminal box through the conduit connection.
2. When applicable, install conduit using any local and national electrical codes that apply to the connection.
3. Connect the control system input channel positive wire to the OUT (+) terminal. Connect the control system input channel negative wire to the OUT (-) terminal.
4. Replace and hand tighten the cover on the terminal box.
5. For applications that require Remote Feedback Mounting (page 26) and/or a THUM Adapter (page 28), proceed to the appropriate page. For DVC6200 SIS applications proceed to Special Instructions for Safety Instrumented Systems on page 31. Otherwise, proceed to Step 4—Configure the Digital Valve Controller on page 29.

Figure 23. FIELDVUE DVC6200 with Position Transmitter or Discrete Switch, Field Wiring Schematic

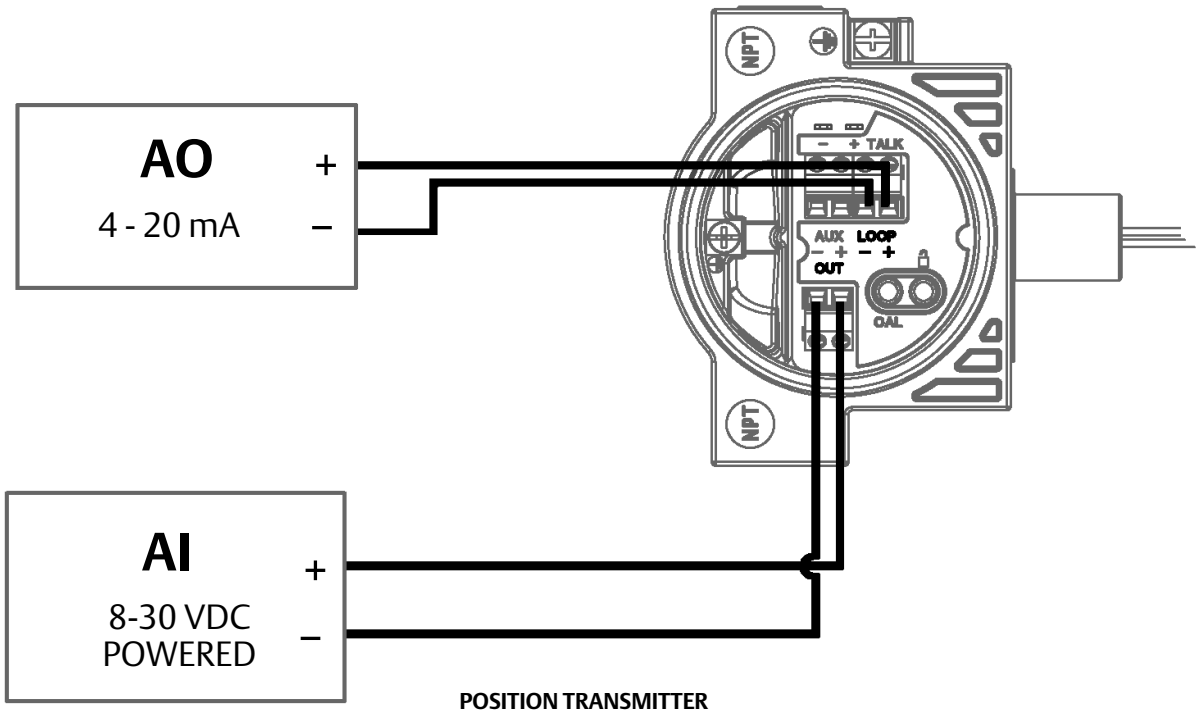

POSITION TRANSMITTER

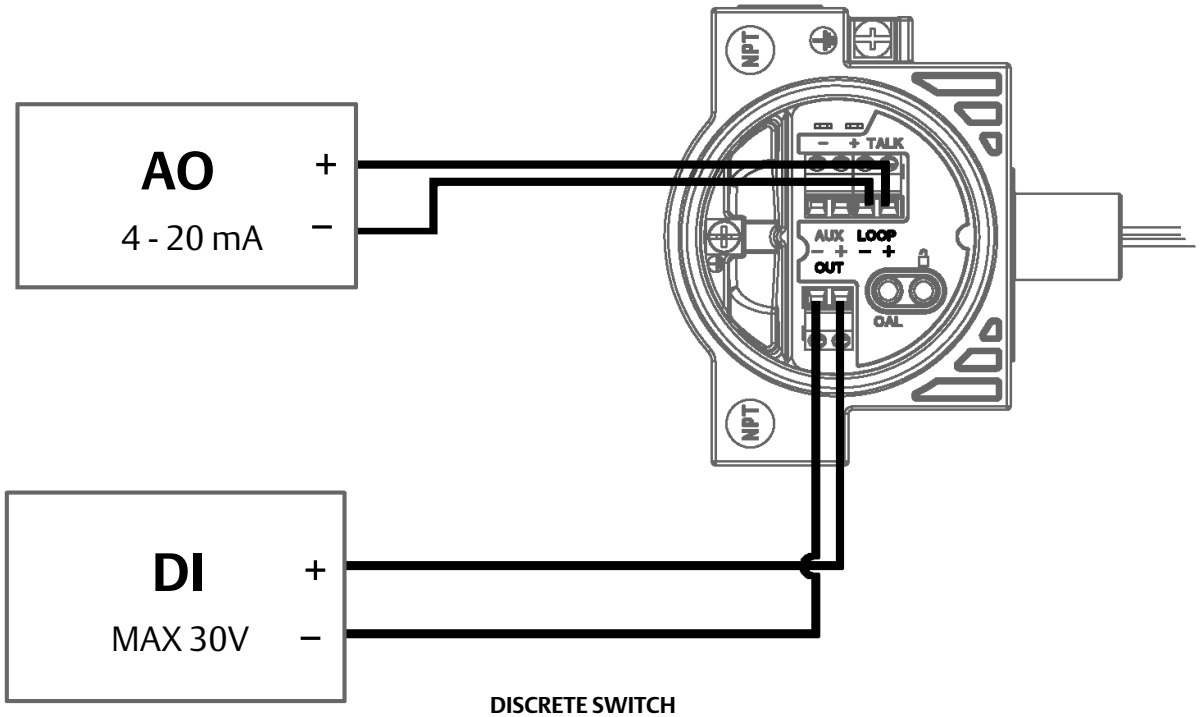

DISCRETE SWITCH

GE61668

Remote Mount Feedback Unit

The DVC6205 base unit is designed to receive a valve travel signal via the DVC6215 feedback unit.

⚠ WARNING

Do not place feedback wiring in the same conduit as other power or signal wiring.

Personal injury or property damage, caused by wiring failure, can result if the feedback wiring connecting the base unit with the remote feedback unit shares a conduit with any other power or signal wiring.

Note

4-conductor shielded cable, 18 to 22 AWG minimum wire size, in rigid or flexible metal conduit, is required for connection between base unit and feedback unit. Pneumatic tubing between base unit output connection and actuator has been tested to 91 meters (300 feet). At 15 meters (50 feet) there was no performance degradation. At 91 meters there was minimal pneumatic lag.

1. Remove the termination caps from both the DVC6215 feedback unit and DVC6205 base unit.
2. Install conduit between the feedback unit and the base unit following applicable local and national electrical codes.
3. Route the 4-conductor shielded cable through the conduit.
4. Connect each wire of the 4-conductor shielded cable between the corresponding terminals on the feedback unit and the base unit (refer to figure 24).

⚠ WARNING

The cable shield is typically not insulated. It is required that you insulate the cable shield prior to installation.

When connecting the cable shield in step 5 ensure that any exposed shielding does not contact the DVC6215 housing, as shown in figure 25. Failure to do so can result in ground loop issues.

5. Connect the cable shield between terminal S on the feedback unit and terminal S on the base unit.

CAUTION

Failure to secure the cable wires in the support clips in step 6 can result in broken wires in applications with high levels of vibration.

6. Secure the cable wires, using the support clips in the DVC6215 feedback unit (as shown in figure 25), to help prevent shifting and movement of the wires.
7. Replace and hand-tighten all covers.
8. For applications that require a THUM Adapter proceed to page 28. For DVC6200 SIS applications proceed to Special Instructions for Safety Instrumented Systems on page 31. Otherwise proceed to Step 4—Configure the Digital Valve Controller on page 29.

Figure 24. Terminal Details for Connecting the Base Unit and Feedback Unit for Remote-Mounted Digital Valve Controllers

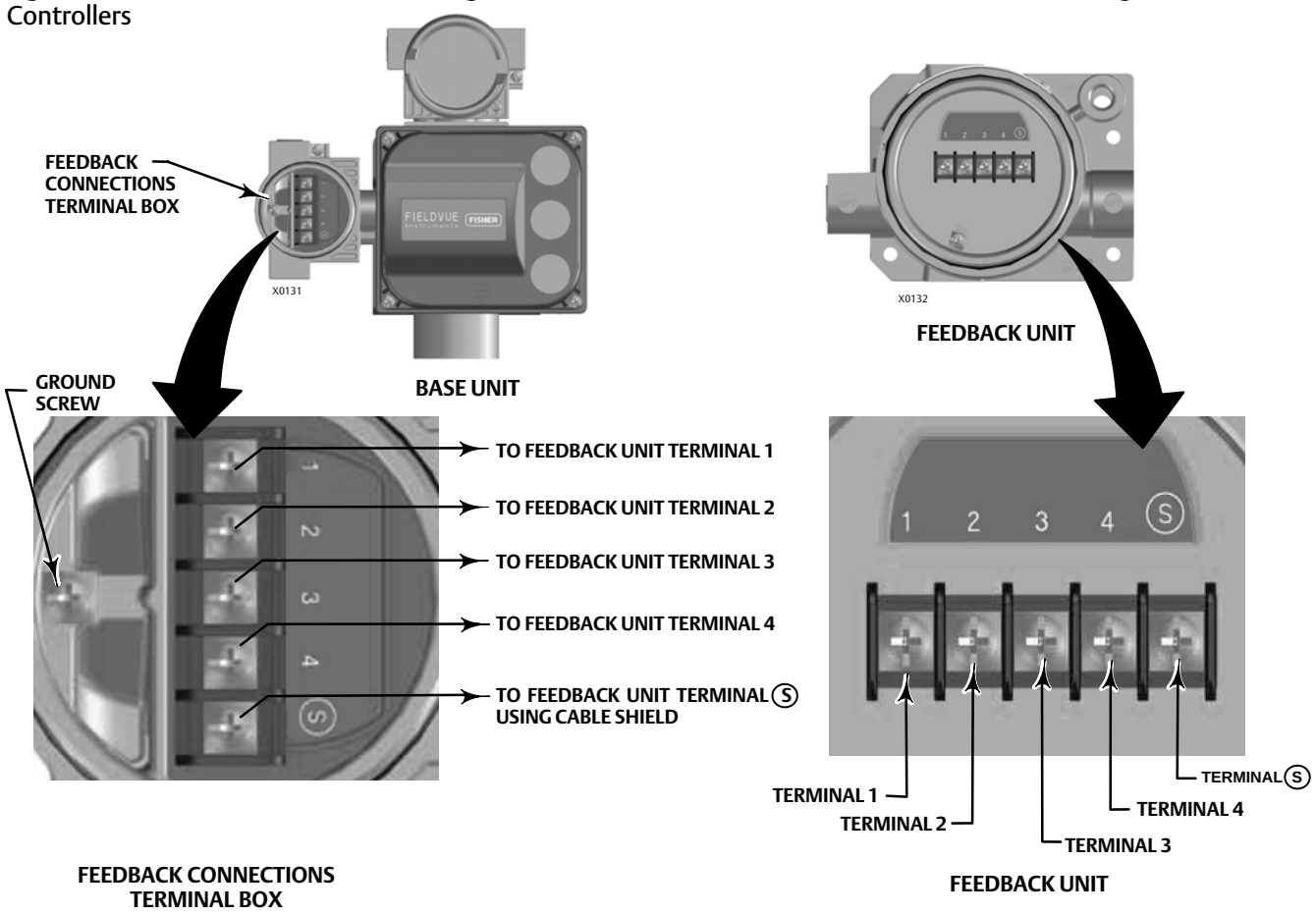

Figure 25. Wire Clips

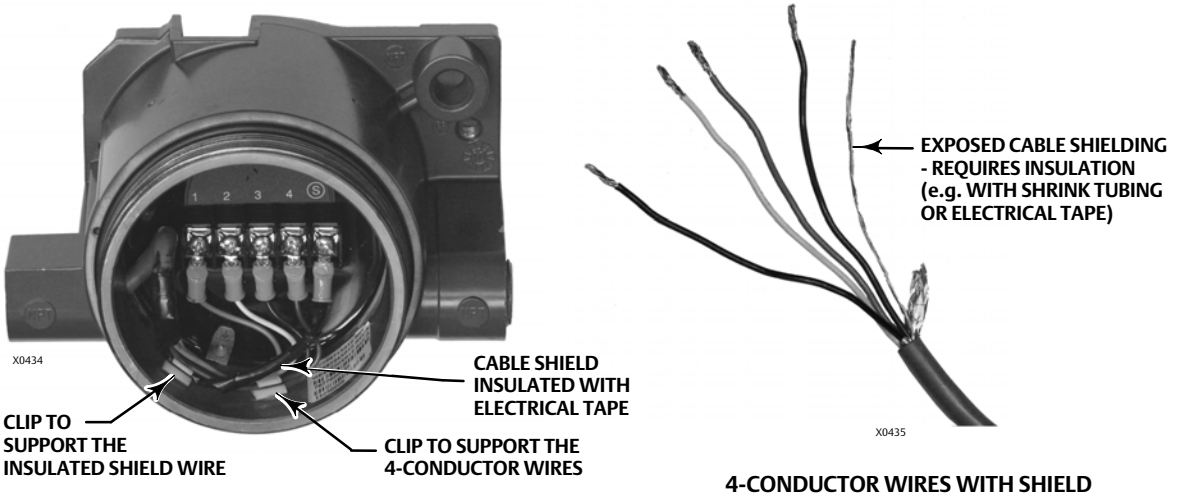

Smart Wireless THUM Adapter

Refer to the quick installation guide that comes with the Smart Wireless THUM Adapter (00825-0100-4075) for additional information.

Note

The recommended mounting orientation for the THUM Adapter is vertically up, as shown in figure 26 for optimal wireless communication range.

Figure 26. THUM Adapter Installed On DVC6200 Digital Valve Controller



1. Remove the DVC6200 terminal box plug from the top conduit entrance.
2. Thread the THUM Adapter into the top conduit entrance.
3. Using the wire splice included with the THUM Adapter (or other suitable wire splice), connect the wires as shown in figure 27 below.

Figure 27. Wiring the THUM Adapter

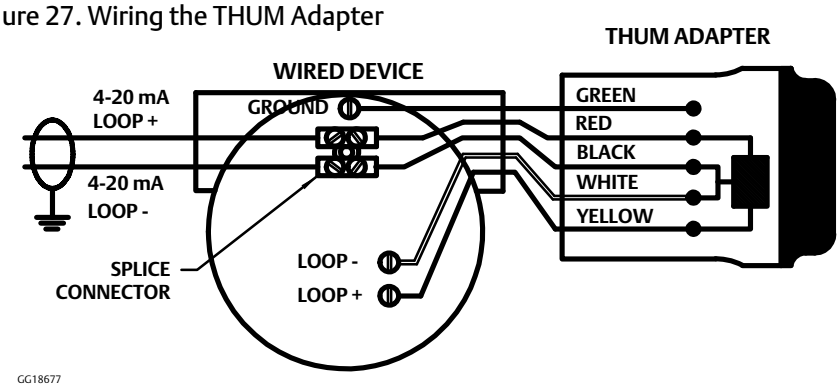

4. Carefully coil the wires inside the terminal box.
5. Replace and hand tighten the cover on the terminal box.
6. Proceed to Step 4—Configure the Digital Valve Controller on page 29.

Step 4—Configure the Digital Valve Controller

⚠ WARNING

- **Select wiring and/or cable glands that are rated for the environment of use (such as hazardous area, ingress protection and temperature). Failure to use properly rated wiring and/or cable glands can result in personal injury or property damage from fire or explosion.**
- **Wiring connections must be in accordance with local, regional, and national codes for any given hazardous area approval. Failure to follow the local, regional, and national codes could result in personal injury or property damage from fire or explosion.**
- **To avoid personal injury resulting from electrical shock, do not exceed maximum input voltage specified on the product nameplate. If the input voltage specified differs, do not exceed the lowest specified maximum input voltage.**
- **Personal injury or property damage caused by fire or explosion may occur if this connection is attempted in a potentially explosive atmosphere or in an area that has been classified as hazardous. Confirm that area classification and atmosphere conditions permit the safe removal of the terminal box cover before proceeding.**
- **The valve may move in an unexpected direction when power is applied to the digital valve controller. To avoid personal injury and property damage caused by moving parts, keep hands, tools, and other objects away from the valve/actuator assembly when applying power to the instrument.**
- **While configuring the digital valve controller the valve may move, causing process fluid or pressure to be released. To avoid personal injury and property damage caused by the release of process fluid or pressure, isolate the valve from the process and equalize pressure on both sides of the valve or bleed off the process fluid.**
- **Changes to the instrument setup may cause changes in the output pressure or valve travel. Depending on the application, these changes may upset process control, which may result in personal injury or property damage.**

CAUTION

Before proceeding, check that all pressure connections, fasteners, and plugs are installed and tightened.

For remote mount installations, ensure that the Base Unit is wired to the Feedback Unit before providing electrical power. Failure to do so may cause the DVC6205 to go into "Pressure Control" mode if Pressure Fallback is configured. The unit can be returned to "Travel Control" mode using Detailed Configuration.

1. Install the latest version of the communication software on the user interface tool. This may include Device Descriptions (DD, EDD), ValveLink™ software, Device Type Manager (DTM), or GSD. Refer to table 1 below.

   Contact your local Emerson Process Management sales office to ensure that you have the latest software version or for information on locating the necessary files.

Table 1. User Interface Tools and Software Available for Instrument Configuration and Calibration

	DVC6200 HART	DVC6200 SIS HART	DVC6200f FOUNDATION fieldbus	DVC6200p PROFIBUS PA
475 Field Communicator (DD)	☑	☑	☑	
AMS Device Manager (DD)	☑	☑	☑	
ValveLink Software	☑	☑	☑	
ValveLink Mobile Software	☑		☑	
Field Device Type Frame (DTM)	☑	☑	☑	
Siemens SIMATIC™ PDM Software (DD, GSD)				☑

2. Apply pneumatic supply pressure to the digital valve controller and adjust the supply pressure regulator according to the actuator requirements and limitations.
3. Apply electrical power to the digital valve controller.
4. Establish communication with the digital valve controller and commission the instrument as described in the host system documentation.

Note

If the TALK terminals on the digital valve controller are to be used for communication, remove the terminal box cap to access the terminals.

5. Launch the user interface tool.
6. Perform Device Setup to configure and calibrate the instrument on the control valve assembly.
7. Enter any additional custom configuration items (optional).

Note

On HART devices with the optional transmitter or switch option, you must enable and configure the output terminals. The configuration is disabled by default from the factory.

8. To enable the digital valve controller to follow set point, place the instrument In Service (HART devices) or place the transducer block in Auto (fieldbus and PROFIBUS devices).

	SIS

Special Instructions for Safety Instrumented Systems

DVC6200 SIS instruments are identified by an SIS label on the terminal box cover. Please refer to the Safety Manual (D103601X012) for further information regarding the design, installation, and operation of the DVC6200 SIS product.

The following section illustrates typical installation scenarios for a DVC6200 SIS. The digital valve controller can be configured to trip on low current (de-energize to trip, DETT) or high current (energize to trip, ETT). See figure 28 for the DIP switch configuration of this action on the printed wiring board. This setting is preconfigured at the factory when ordered properly.

Figure 28. DIP Switch Location

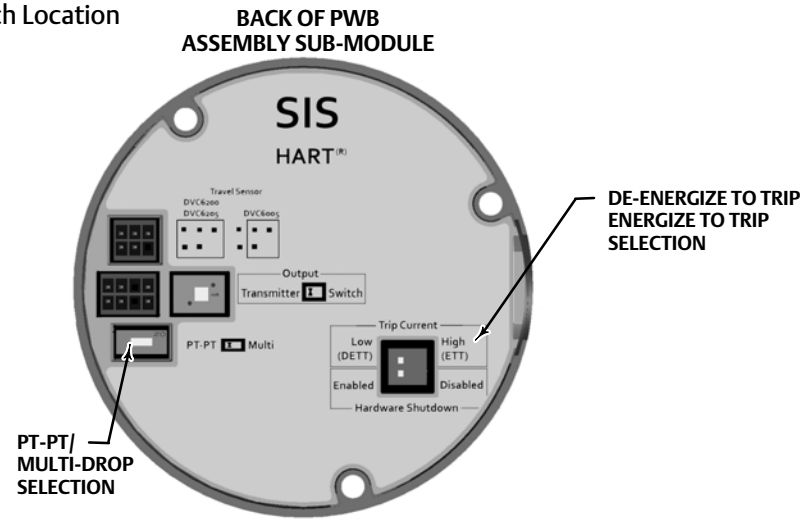

Table 2. DIP Switch Configuration(1)

Switch Label	Operational Mode	DIP Switch Position
PT-PT	4-20 mA Point-to-Point Loop	LEFT
Multi	24 VDC Multi-Drop Loop	RIGHT
Hardware Shutdown	Enabled	LEFT
Hardware Shutdown	Disabled	RIGHT
Trip Current Low (DETT)	De-energize to trip	LEFT
Trip Current High (ETT)	Energize to trip	RIGHT

1. Refer to figure 28 for switch location.

Note

DVC6200 SIS instruments in PT-PT mode require the Hardware Shutdown Switch be Enabled for FMEDA failure rates to be valid for 4-20 mA operation.

⚠ WARNING

When Hardware Shutdown is enabled, the instrument will respond to a signal change regardless of instrument mode. The valve may move in an unexpected direction when power is applied to the digital valve controller. To avoid personal injury and property damage caused by moving parts, keep hands, tools, and other objects away from the valve/actuator assembly when applying power to the instrument.

An optional local control panel (LCP100), shown in figure 29, can be installed to provide manual operation of the DVC6200 SIS instrument. Refer to the instruction manual that comes with the LCP100 for further information (D103272X012).

Note

If the LCP100 is connected to a DVC6200 SIS in a zone 1 explosion-proof “d” environment, there must be a conduit seal installed between the DVC6200 SIS and the LCP100 in order to maintain the explosion-proof integrity of the DVC6200 SIS.

The LCP100 cannot be connected to a DVC6200 SIS that is part of a zone 0 or zone 1 intrinsically safe “i” installation.

Figure 29. LCP100 Connected to a DVC6200 SIS Instrument



X0248

For de-energize to trip DVC6200 SIS and de-energize to trip solenoid valve, proceed to page 33

For de-energize to trip DVC6200 SIS, no solenoid valve, proceed to page 35

For DVC6200 SIS for PST only and de-energize to trip solenoid valve, proceed to page 37

For solenoid valve health monitoring installations, proceed to page 38

De-Energize to Trip (DETT) DVC6200 SIS and DETT Solenoid Valve

In a typical de-energize to trip application with a solenoid valve, the logic solver (or DCS) trip signal de-energizes the solenoid valve and also reduces the signal to the digital valve controller to 4 mA (or 0 VDC). This opens the solenoid valve vent and drives the digital valve controller to the no output pressure condition. As a result, the safety valve moves to its no-air, fail safe position.

Figure 30. FIELDVUE DVC6200 SIS and Solenoid Valve Powered Separately

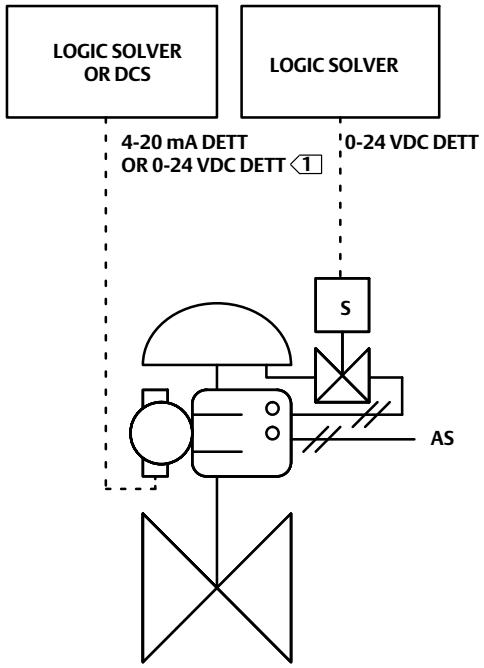

Figure 31. FIELDVUE DVC6200 SIS and Solenoid Valve Powered Together

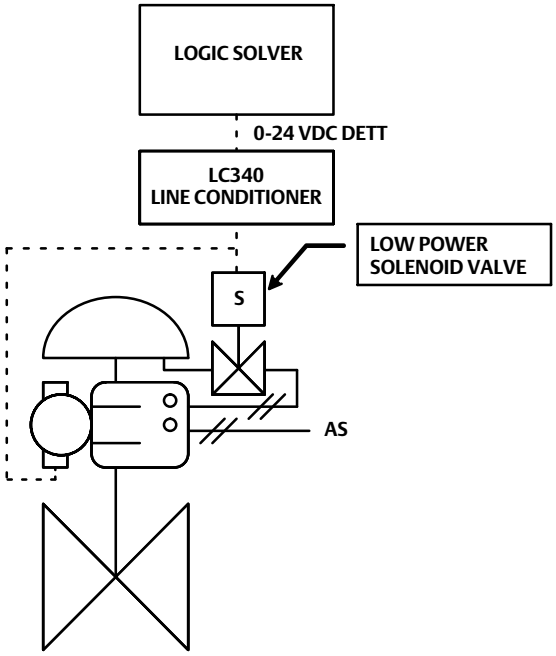

Note

When using an ASCO™ low-power solenoid valve, model EF8316G303 or EF8316G304 (or an equivalent low-power solenoid valve) a separate external air supply for the pilot is required. Ensure that the solenoid valve's “selection gasket” is in the “external position”. The pilot pressure must be at least 15 psig higher than the solenoid valve line pressure. For more information, refer to the ASCO catalog or contact your Emerson Process Management sales office.

1. Install the solenoid valve on the actuator casing or actuator yoke.
2. Install at least 10 mm (3/8-inch) diameter tubing such that the solenoid valve is in the pneumatic path between the DVC6200 SIS output and the actuator input.

3. If the DVC6200 SIS and solenoid valve are powered separately:
   - Connect the logic solver output card +/- terminals to the corresponding solenoid valve +/- wires.
   - Connect the logic solver (or DCS) output card +/- terminals to the corresponding DVC6200 SIS LOOP +/- terminals.

Note

For the digital valve controller to operate with a 4-20 mA control signal the DIP switch must be in the point-to-point loop position, as shown in table 2. The control mode must be set to analog. This is set at the factory when ordered properly.

4. If the DVC6200 SIS and solenoid valve are powered together:
   - Install an LC340 line conditioner to allow HART communication over the segment. Refer to the instruction manual that comes with the LC340 (D102797X012) for more information.
   - Connect the logic solver output card +/- terminals to the corresponding LC340 SYS +/- terminals.
   - Connect the digital valve controller LOOP +/- terminals to the corresponding LC340 FLD +/- terminals.
   - Connect the solenoid valve +/- wires to the corresponding LC340 FLD +/- terminals.

Note

For the digital valve controller to operate with a 0-24 VDC voltage control signal the DIP switches must be in the “Multi” position and the “Hardware Shutdown Disabled” position, as shown in figure 28 and table 2. The control mode must also be set to digital with a user interface tool. These are set at the factory when ordered properly.

Ensure that the LC340 Line Conditioner voltage drop, the solenoid valve engagement voltage (at maximum temperature), and the wiring voltage drop do not exceed the logic solver maximum output voltage. The line conditioner introduces an approximate 2.0 volt drop in the SIS system wiring with a 50 mA load. An ASCO EF8316 solenoid valve requires 18.4 V and 42 mA to trip. The digital valve controller draws approximately 8 mA. Based on these conditions, table 3 lists the maximum loop wire resistance permitted for various logic solver output voltages.

Table 3. Maximum Loop Wire Resistance per Logic Solver Output Voltage(1)

Logic Solver Output Voltage (VDC)	Maximum Loop Wire Resistance (Ohms)	Maximum Wire Length (feet)(2)			
		22 AWG	20 AWG	18 AWG	16 AWG
24.00	32.0	952	1429	2381	3175
23.75	27.0	804	1205	2009	2679
23.50	22.0	655	982	1637	2183
23.25	17.0	506	759	1265	1687
23.00	12.0	357	536	893	1190
22.75	7.0	208	313	521	694
22.50	2.0	60	89	149	198

1. Maximums in this table assume a line conditioner and a solenoid that requires a minimum of 20.4 V and 42 mA to engage.
2. Wire length includes both wires in a twisted pair.

5. Proceed to Step 4—Configure the Digital Valve Controller on page 29.

De-Energize to Trip (DETT) DVC6200 SIS, no Solenoid Valve

In a typical de-energize to trip application without a solenoid valve, the logic solver trip signal de-energizes the digital valve controller to 4 mA (or 0 VDC). This drives the digital valve controller to the no output pressure condition. As a result, the safety valve moves to its no-air, fail safe position.

Figure 32. FIELDVUE DVC6200 SIS Powered with 4-20 mA

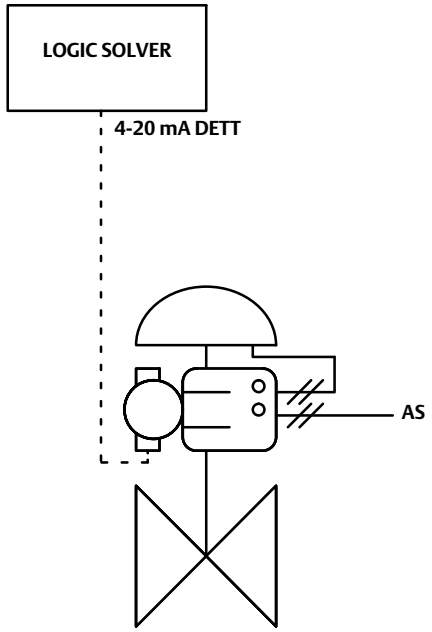

Figure 33. FIELDVUE DVC6200 SIS Powered with 0-24 VDC

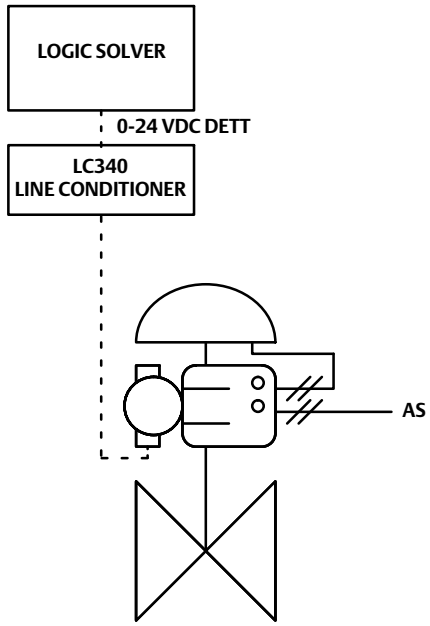

1. If the DVC6200 SIS is powered with 4-20 mA, connect the logic solver output card +/- terminals to the corresponding DVC6200 SIS LOOP +/terminals.

Note

For the digital valve controller to operate with a 4-20 mA control signal the DIP switch must be in the point-to-point loop position, as shown in table 2. The control mode must be set to analog. This is set at the factory when ordered properly.

2. If the DVC6200 SIS and solenoid valve are powered together:
   - Install an LC340 line conditioner to allow HART communication over the segment. Refer to the instruction manual that comes with the LC340 (D102797X012) for more information.
   - Connect the logic solver output card +/- terminals to the corresponding LC340 SYS +/- terminals.
   - Connect the digital valve controller LOOP +/- terminals to the corresponding LC340 FLD +/- terminals.

Note

For the digital valve controller to operate with a 0-24 VDC voltage control signal the DIP switches must be in the “Multi” position and the “Hardware Shutdown Disabled” position, as shown in figure 28 and table 2. The control mode must also be set to digital with a user interface tool. These are set at the factory when ordered properly.

3. Proceed to Step 4—Configure the Digital Valve Controller on page 29.

DVC6200 SIS for PST only and De-Energize to Trip (DETT) Solenoid Valve

In this application, the logic solver trip signal de-energizes the solenoid valve, which opens the solenoid vent valve. The DVC6200 SIS is configured as energize to trip (ETT) and uses a reverse acting relay (Relay B) to drive the digital valve controller to the no output pressure condition. The energize to trip option provides maximum actuator pressure at minimum control signal (4 mA). Therefore, loss of the control signal will not cause the safety valve to trip. The safety valve moves to its no-air, fail safe position when the logic solver (or DCS) sets the current to the digital valve controller to 20 mA. Partial stroke testing occurs at minimum control signal (4 mA).

Figure 34. FIELDVUE DVC6200 SIS and Solenoid Valve Powered Separately

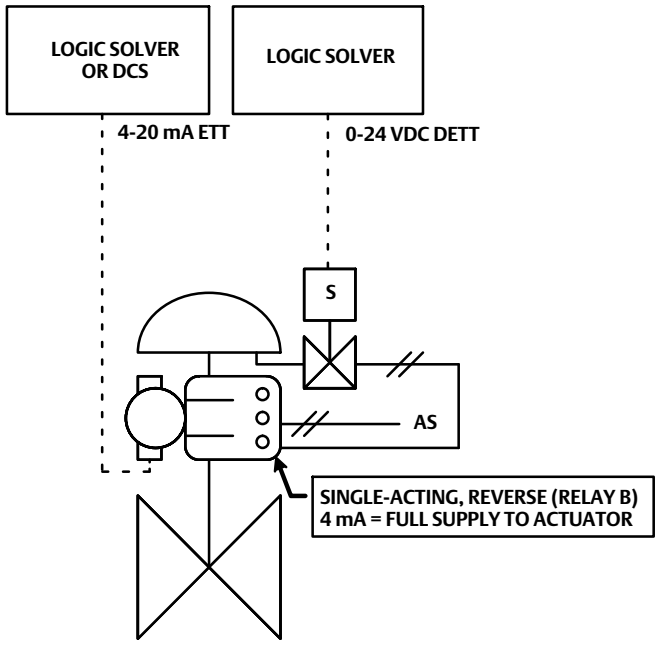

1. Install the solenoid valve on the actuator casing or actuator yoke.
2. Install at least 10 mm (3/8-inch) diameter tubing such that the solenoid valve is in the pneumatic path between the DVC6200 SIS output and the actuator input.
3. Connect the logic solver output card +/- terminals to the corresponding solenoid valve +/- wires.
4. Connect the logic solver (or DCS) output card +/- terminals to the corresponding DVC6200 SIS LOOP +/- terminals.
5. Proceed to Step 4—Configure the Digital Valve Controller on page 29.

Solenoid Valve Health Monitoring

If a solenoid valve is installed between the DVC6200 SIS pressure output and the actuator, the control valve assembly can be configured to verify the operation of the solenoid valve. This applies to single-acting actuator applications only. The “unused” output port of the DVC6200 SIS is tubed such that the pressure downstream of the solenoid valve is measured. When the solenoid valve is pulsed, the DVC6200 SIS senses the momentary pressure drop across the solenoid valve.

Figure 35. Tubing for Solenoid Valve Health Monitoring, De-Energize to Trip DVC6200 SIS

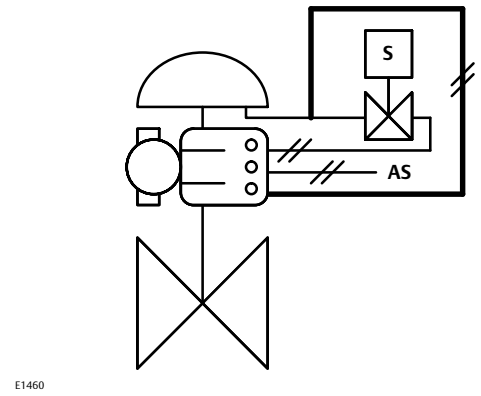

Figure 36. Tubing for Solenoid Valve Health Monitoring, Energize to Trip DVC6200 SIS

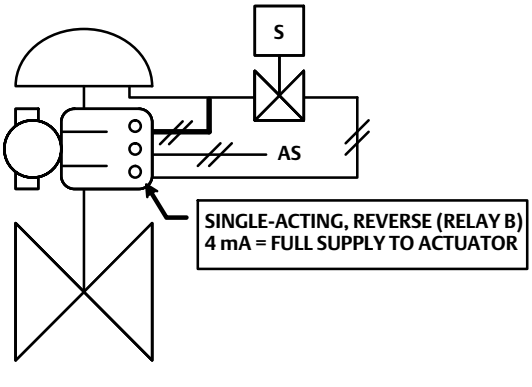

1. For DETT applications (figure 35):
   - Install at least 10 mm (3/8-inch) diameter tubing between output B (bottom port) of the DVC6200 SIS output and the tubing segment between the solenoid valve and safety valve actuator.
2. For ETT DVC6200 SIS applications (figure 36):
   - Install at least 10 mm (3/8-inch) diameter tubing between output A (top port) of the DVC6200 SIS output and the tubing segment between the solenoid valve and safety valve actuator.
3. Proceed to Step 4—Configure the Digital Valve Controller on page 29.

Hazardous Area Approvals and Special Instructions for "Safe Use" and Installations in Hazardous Locations

Certain nameplates may carry more than one approval, and each approval may have unique installation/wiring requirements and/or conditions of "safe use". These special instructions for "safe use" are in addition to, and may override, the standard installation procedures. Special instructions are listed by approval type.

Note

This information supplements the nameplate markings affixed to the product.

Always refer to the nameplate itself to identify the appropriate certification. Contact your Emerson Process Management sales office for approval/certification information not listed here.

Approval information is for both aluminum and stainless steel constructions.

⚠ WARNING

Failure to follow these conditions of "safe use" could result in personal injury or property damage from fire or explosion, or area re-classification.

For CSA Approvals proceed to page 40

For FM Approvals proceed to page 47

For ATEX Approvals proceed to page 54

For IECEx Approvals proceed to page 61

CSA

Ordinary Locations Approval

Complies with general electrical safety CAN/CSA-C22.2 No. 61010-1-2004
SELV, conduit connected, Enclosure Type 4X, IP66, Installation Category I, Pollution Degree 4

DVC6200 Series (HART HW1, FOUNDATION fieldbus, PROFIBUS)

Rated Input 9-30 VDC, 4-20 mA
-52°C to + 80°C Ambient

DVC6205 (HART HW1, FOUNDATION fieldbus, PROFIBUS)

Rated Input 9-30 VDC, 4-20 mA
Outputs 0-9.6 VDC, 0-3.5 mA
-52°C to + 80°C Ambient

DVC6215 Remote Mount

Rated Input 10 VDC max, 3.5 mA max
-52 to 125°C Ambient

Explosion-proof and Dust Ignition-proof

DVC6200 and DVC6205 Series (HART HW1 & HW2, SIS, FOUNDATION FIELDBUS, PROFIBUS)

Class I, Division 1, Groups B,C,D ; Class I, Division 2, Groups A,B,C,D
Class II, Division 1, Groups E,F,G ; Class II, Division 2, Groups F,G
Class III, Division 1
Ex d IIC
Ex nC IIC
Type 4X, IP66
Single Seal Device (HART HW2 and SIS pending)

Rated input 30 Vmax, 20 mA
- 52°C < Ambient < + 80°C
Max inlet pressure 145 psig (air or natural gas)
Temperature Code: T6 (Tamb ≤ 75°C), T5 (Tamb ≤ 80°C)

DVC6215 Remote Mount

Class I, Division 1, Groups A,B,C,D ; Class I, Division 2, Groups A,B,C,D
Class II, Division 1, Groups E,F,G ; Class II, Division 2, Groups F,G
Class III
Ex d IIC
Ex nA IIC
Type 4X, IP66

Rated input 30 Vmax, 20 mA
- 52°C < Ambient < + 125°C
Temperature Code: T6 (Tamb ≤ 75° C), T5 (Tamb ≤ 90°C), T4 (Tamb ≤ 125°C)

Intrinsically Safe

Class I, Division 1, Groups A,B,C,D
Class II, Division 1, Groups E,F,G
Class III, Division 1
Ex ia IIC
Type 4X, IP66
Single Seal Device (HART HW2 and SIS pending)

Rated input 30 V DC max, 20 mA
- 52 °C < Ambient < + 80°C (-52°C to 125°C for DVC6215)
Max inlet pressure 145 psig (air or natural gas)
Intrinsically safe when connected per installation drawing GE42818, as shown in the following figures

DVC6200 HW1 . . . . . figure 37 and 42
DVC6200 HW2 and DVC6200 SIS . . . . . figure 38 and 42
DVC6205, DVC6205 SIS, and DVC6215 Remote Mount . . . . . figure 39 and 42
DVC6200f and DVC6200p . . . . . figure 40 and 42
DVC6205f, DVC6205p, and DVC6215 Remote Mount . . . . . figure 41 and 42

Figure 37. CSA Loop Schematic—FIELDVUE DVC6200 HW1

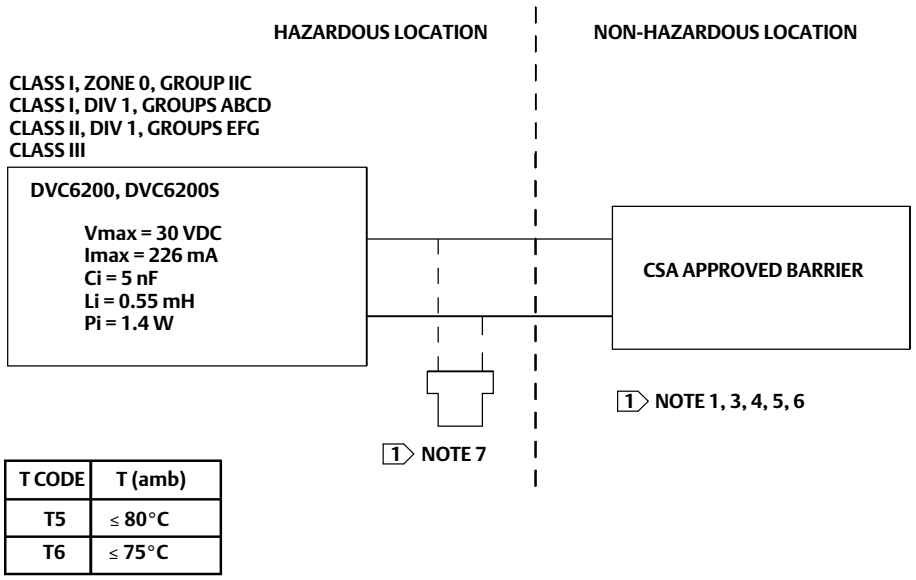

T CODE	T (amb)
T5	≤ 80°C
T6	≤ 75°C

1 SEE NOTES IN FIGURE 42

GE42818 sheet 2, Rev. F

Figure 38. CSA Loop Schematics—FIELDVUE DVC6200 HW2 and DVC6200 SIS

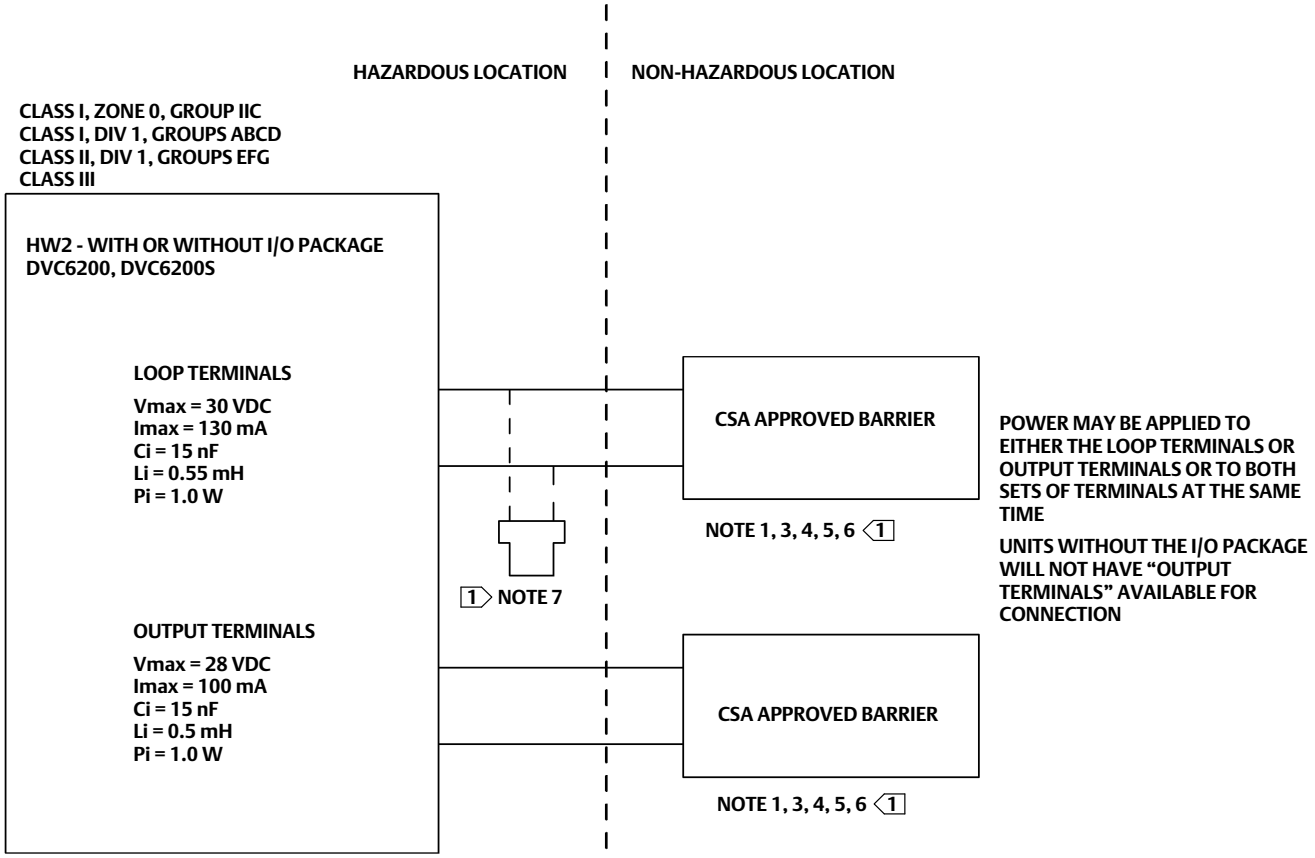

	WITH I/O PACKAGE	WITHOUT I/O PACKAGE
T CODE	T (amb)	T (amb)
T5	≤ 80°C	≤ 80°C
T6	≤ 61°C	≤ 74°C

1 SEE NOTES IN FIGURE 42

GE42818 Sheet 11, Rev. C

Figure 39. CSA Loop Schematics FIELDVUE DVC6205, DVC6205 SIS, and DVC6215

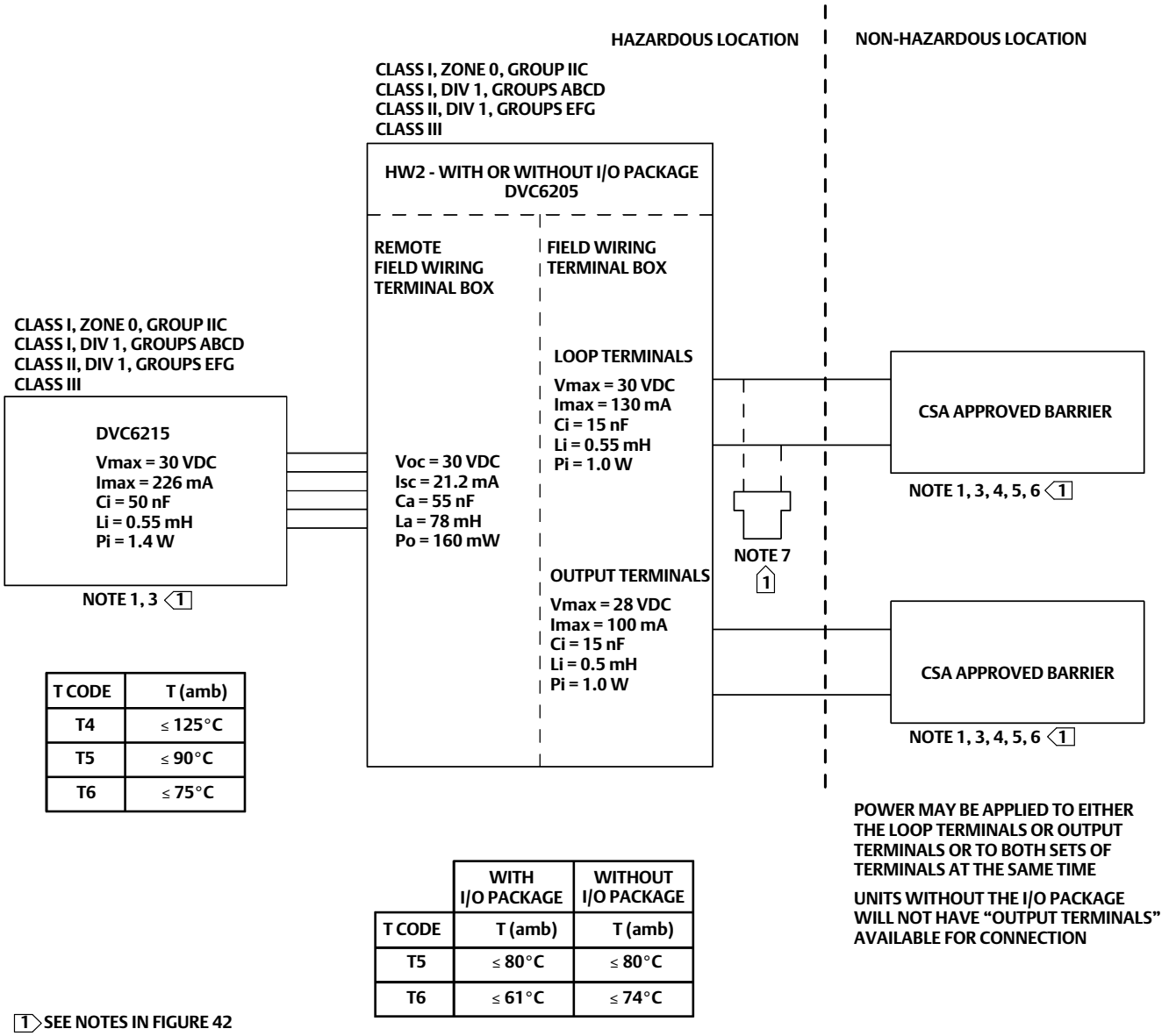

T CODE	T (amb)
T4	≤ 125°C
T5	≤ 90°C
T6	≤ 75°C

	WITH I/O PACKAGE	WITHOUT I/O PACKAGE
T CODE	T (amb)	T (amb)
T5	≤ 80°C	≤ 80°C
T6	≤ 61°C	≤ 74°C

1 SEE NOTES IN FIGURE 42

GE42818 Sheet 12, Rev. C

Figure 40. CSA Loop Schematics—FIELDVUE DVC6200f and DVC6200p

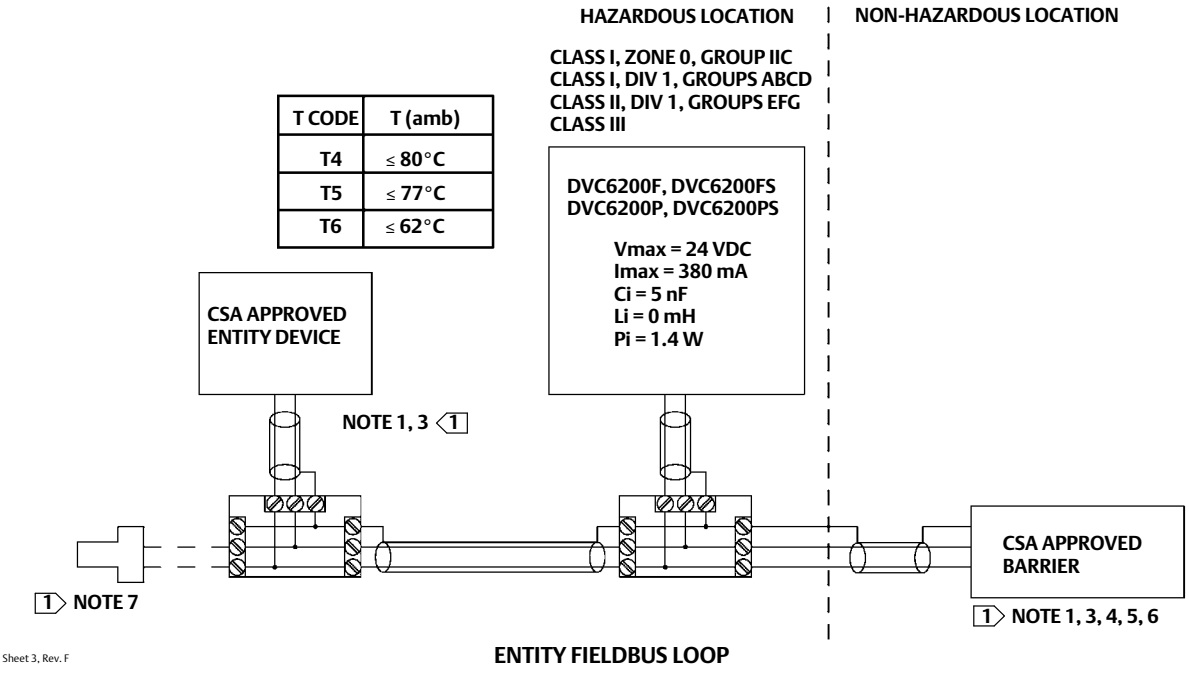

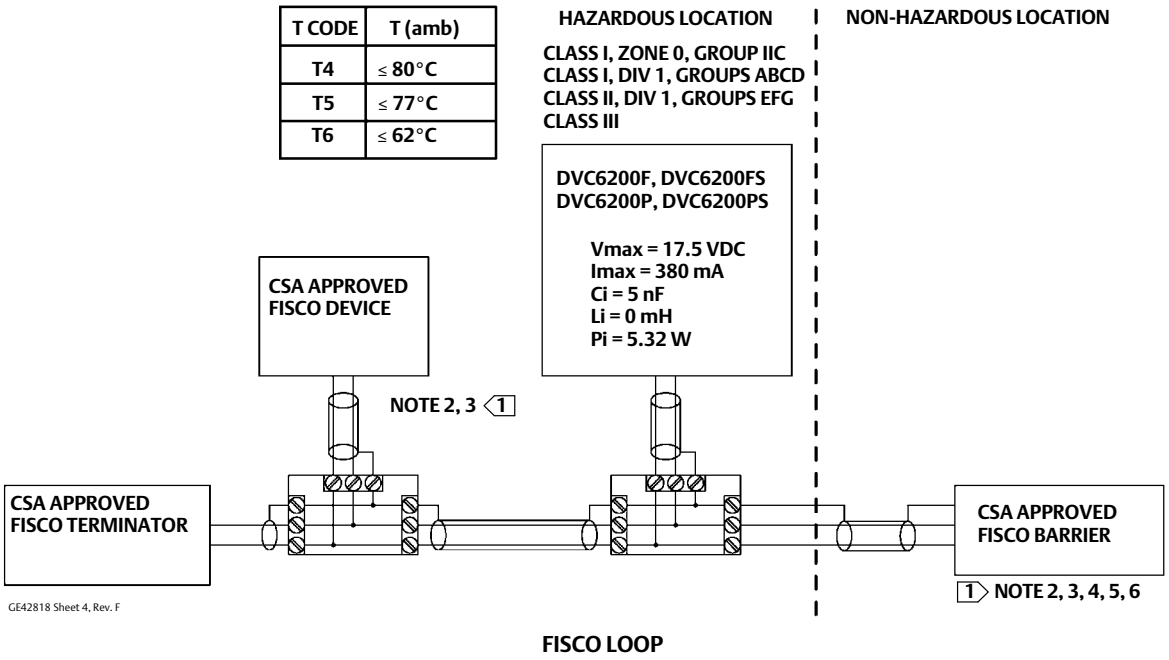

1 SEE NOTES IN FIGURE 42

Figure 41. CSA Loop Schematics FIELDVUE DVC6205f, DVC6205p, and DVC6215

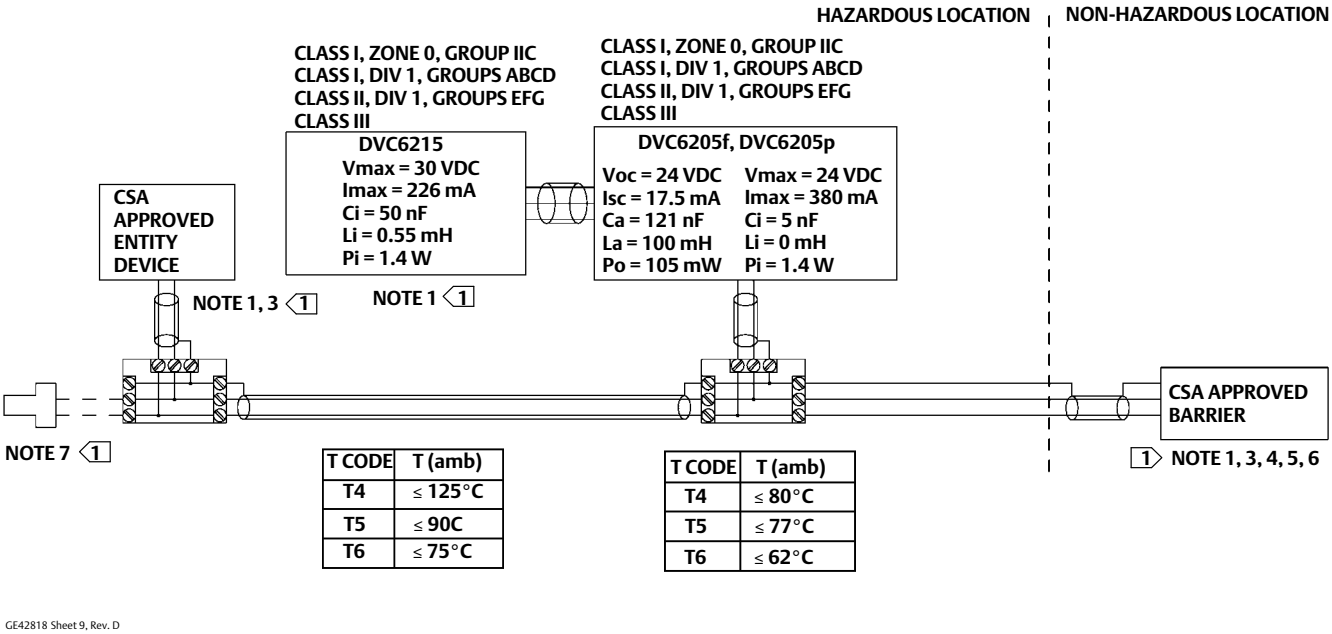

ENTITY FIELDBUS LOOP

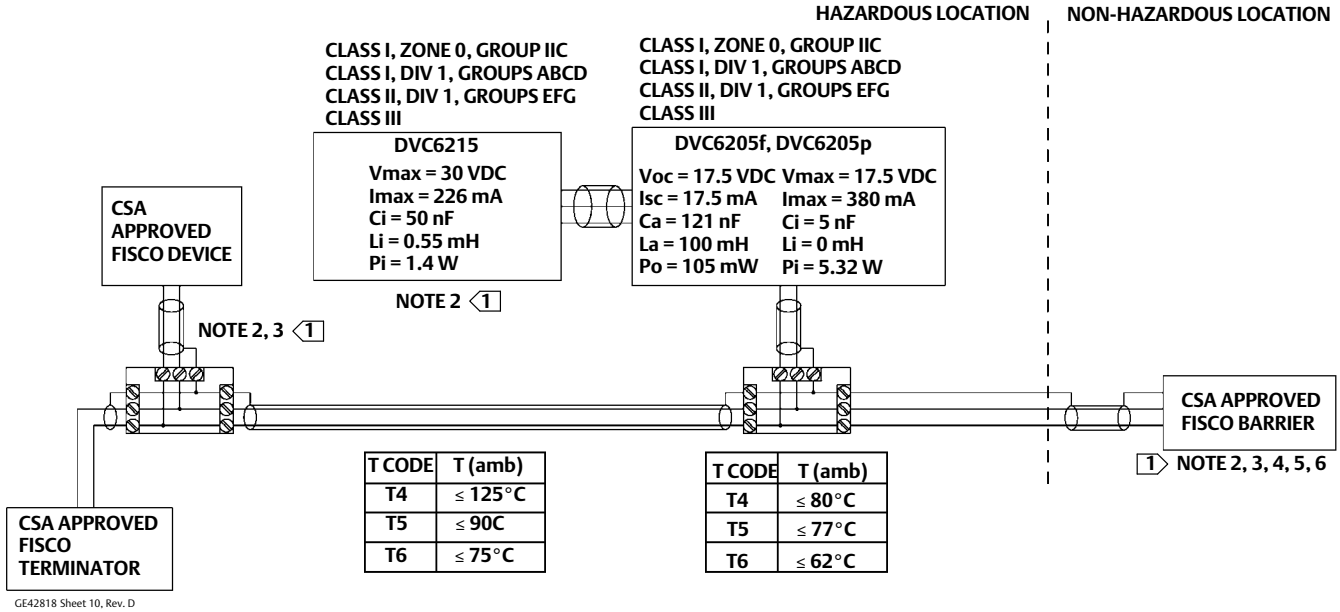

1 SEE NOTES IN FIGURE 42

FISCO LOOP

Figure 42. Notes for CSA Loop Schematics

1 THE ENTITY CONCEPT ALLOWS INTERCONNECTION OF INTRINSICALLY SAFE APPARATUS TO ASSOCIATED APPARATUS NOT SPECIFICALLY EXAMINED IN SUCH COMBINATION. THE CRITERIA FOR INTERCONNECTION IS THAT THE VOLTAGE (Vmax or Ui), THE CURRENT (Imax or Ii), AND THE POWER (Pmax or Pi) OF THE INTRINSICALLY SAFE APPARATUS MUST BE EQUAL TO OR GREATER THAN THE VOLTAGE (Voc or Uo), AND THE CURRENT (Isc or Io), AND THE POWER(Po) DEFINED BY THE ASSOCIATED APPARATUS. IN ADDITION, THE SUM OF THE MAX UNPROTECTED CAPACITANCE (Ci) AND MAX UNPROTECTED INDUCTANCE (Li), INCLUDING THE INTERCONNECTING CABLING CAPACITANCE (Ccable) AND CABLING INDUCTANCE (Lcable) MUST BE LESS THAN THE ALLOWABLE CAPACITANCE (Ca) AND INDUCTANCE (La) DEFINED BY THE ASSOCIATED APPARATUS. IF THE ABOVE CRITERIA IS MET, THEN THE COMBINATION MAY BE CONNECTED.

Vmax or Ui ≥ Voc or Uo Imax or Ii ≥ Isc or Io Pmax or Pi ≥ Po Ci + Ccable ≤ Ca Li + Lcable ≤ La

2 THE FISCO CONCEPT ALLOWS INTERCONNECTION OF INTRINSICALLY SAFE APPARATUS TO ASSOCIATED APPARATUS NOT SPECIFICALLY EXAMINED IN SUCH COMBINATION. THE CRITERIA FOR THE INTERCONNECTION IS THAT THE VOLTAGE (Vmax or Ui), CURRENT (Imax or Ii), AND POWER (Pmax or Pi), WHICH AN INTRINSICALLY SAFE APPARATUS CAN RECEIVE AND REMAIN INTRINSICALLY SAFE, CONSIDERING FAULTS, MUST BE EQUAL TO OR GREATER THAN THE VOLTAGE (Voc or Uo), CURRENT (Isc or Io), AND POWER (Po) LEVELS WHICH CAN BE DELIVERED BY THE ASSOCIATED APPARATUS, CONSIDERING FAULTS AND APPLICABLE FACTORS. IN ADDITION THE MAXIMUM UNPROTECTED CAPACITANCE (Ci) AND INDUCTANCE (Li) OF EACH APPARATUS (OTHER THAN THE TERMINATION) CONNECTED TO THE FIELDBUS MUST BE LESS THAN OR EQUAL TO 5 nF AND 10 uH RESPECTIVELY.

IN EACH SEGMENT ONLY ONE ACTIVE DEVICE, NORMALLY THE ASSOCIATED APPARATUS, IS ALLOWED TO PROVIDE THE NECESSARY ENERGY FOR THE FIELDBUS SYSTEM. THE VOLTAGE (Uo or Voc or Vt) OF THE ASSOCIATED APPARATUS HAS TO BE LIMITED TO THE RANGE OF 9 V TO 17.5 VDC. ALL OTHER EQUIPMENT CONNECTED TO THE BUS CABLE HAS TO BE PASSIVE, MEANING THAT THEY ARE NOT ALLOWED TO PROVIDE ENERGY TO THE SYSTEM, EXCEPT FOR A LEAKAGE CURRENT OF 50 uA FOR EACH CONNECTED DEVICE. SEPARATELY POWERED EQUIPMENT NEEDS A GALVANIC ISOLATION TO ASSURE THAT THE INTRINSICALLY SAFE FIELDBUS CIRCUIT REMAINS PASSIVE.

THE CABLE USED TO CONNECT THE DEVICES NEEDS TO HAVE THE PARAMETERS IN THE FOLLOWING RANGE:

LOOP RESISTANCE R': 15 TO 150 ohms/km
INDUCTANCE PER UNIT LENGTH L: 0.4 TO 1 mH/km
CAPACITANCE PER UNIT LENGTH C': 80 TO 200 nF/km
C' = C' LINE/LINE + 0.5' LINE/SCREEN, IF BOTH LINES ARE FLOATING OR
C' = C' LINE/LINE + C' LINE/SCREEN, IF THE SCREEN IS CONNECTED TO ONE LINE.
LENGTH OF SPLICE: < 1 m (T-BOX MUST ONLY CONTAIN TERMINAL CONNECTIONS WITH NO ENERGY STORAGE CAPABILITY)
LENGTH OF SPUR CABLE: < 30 M
LENGTH OF TRUNK CABLE: < 1 km

AT EACH END OF THE TRUNK CABLE AN APPROVED INFALLIBLE TERMINATION WITH THE FOLLOWING PARAMETERS IS SUITABLE:
R = 90 TO 100 ohms AND C = 0 TO 2.2 uF
NOTE, A BUILT-IN TERMINATOR IS INCLUDED IN THE FIELD SIDE AND A SELECTABLE TERMINATOR IS AVAILABLE ON THE HOST SIDE.

THE NUMBER OF PASSIVE DEVICES CONNECTED TO THE BUS SEGMENT IS NOT LIMITED IN THE FISCO CONCEPT FOR INTRINSICALLY SAFE REASONS. IF THE ABOVE RULES ARE RESPECTED, UP TO A TOTAL LENGTH OF 1000 m (SUM OF THE LENGTH OF THE TRUNK CABLE AND ALL SPUR CABLES), THE INDUCTANCE AND CAPACITANCE OF THE CABLE WILL NOT IMPAIR THE INTRINSIC SAFETY OF THE INSTALLATION.

3 INSTALLATION MUST BE IN ACCORDANCE WITH THE CANADIAN ELECTRICAL CODE (CEC) AND ANSI/ISA RP12.6.

4 MAXIMUM SAFE AREA VOLTAGE SHOULD NOT EXCEED 250 Vrms.

5 RESISTANCE BETWEEN INTRINSICALLY SAFE GROUND AND EARTH GROUND MUST BE LESS THAN ONE OHM

6 LOOPS MUST BE CONNECTED ACCORDING TO THE BARRIER MANUFACTURER'S INSTRUCTIONS.

7 IF HAND-HELD COMMUNICATOR OR MULTIPLEXER IS USED, IT MUST BE CSA APPROVED WITH ENTITY PARAMETERS AND INSTALLED PER THE MANUFACTURER'S CONTROL DRAWINGS.

GE42818 Sheet 8, Rev. E

FM

Explosion-proof, Dust-Ignition proof, Non-Incendive, Suitable for Use

DVC6200 and DVC6205 Series (HART HW1 & HW2, SIS, FOUNDATION FIELDBUS, PROFIBUS)

XP: Class I, Division 1, Groups B,C,D
DIP: Class II, III, Division 1, Groups E,F,G
NI: Class I, Division 2, Groups A,B,C,D
S: Class II, III, Division 2, Groups F,G
T5 Ta = 80°C, T6 Ta = 75°C
Type 4X, IP66

DVC6215 Remote Mount

XP: Class I, Division 1, Groups A,B,C,D
DIP: Class II, III, Division 1, Groups E,F,G
NI: Class I, Division 2, Groups A,B,C,D
S: Class II, III, Division 2, Groups F,G
Ta = 125°C, T5 Ta = 90°C, T6 Ta = 75°C
Type 4X, IP66

Intrinsically Safe

IS Class I, II, III, Division 1, Groups A,B,C,D,E,F,G

Type 4X, IP66
Intrinsically safe when connected per control drawing GE42819, as shown in the following figures

DVC6200 HW1 . . . . . figure 43 and 48
DVC6200 HW2 and DVC6200 SIS . . . . . figure 44 and 48
DVC6205, DVC6205 SIS, and DVC6215 Remote Mount . . . . . figure 45 and 48
DVC6200f and DVC6200p . . . . . figure 46 and 48
DVC6205f, DVC6205p, and DVC6215 Remote Mount . . . . . figure 47 and 48

Special Conditions of Safe Use

- When product is used with natural gas as the pneumatic medium, the maximum working pressure of the natural gas supply shall be limited to 145 psi.
- When product is used with natural gas as the pneumatic medium the product shall not be permitted in a Class I, Division 2, Group A, B, C, D location without the proper venting installation per the manufacturer's instruction manual.
- The apparatus enclosure contains aluminum and is considered to constitute a potential risk of ignition by impact or friction. Care must be taken into account during installation and use to prevent impact or friction.
- Part of the enclosure is constructed from plastic. To prevent the risk of electrostatic sparking the plastic surface should only be cleaned with a damp cloth.

Figure 43. FM Loop Schematic—FIELDVUE DVC6200 HW1

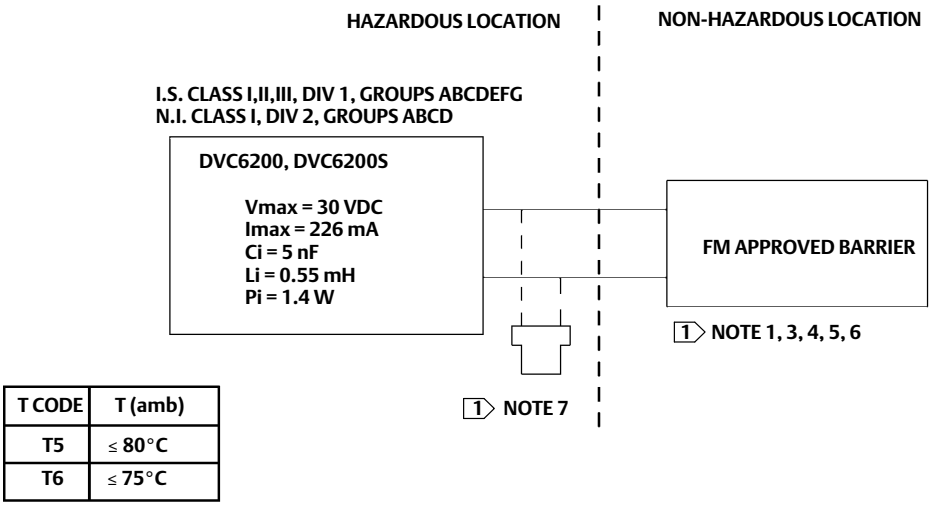

T CODE	T (amb)
T5	≤ 80°C
T6	≤ 75°C

1 SEE NOTES IN FIGURE 48

GE42819 sheet 2, Rev. D

Figure 44. FM Loop Schematics—FIELDVUE DVC6200 HW2 and DVC6200 SIS

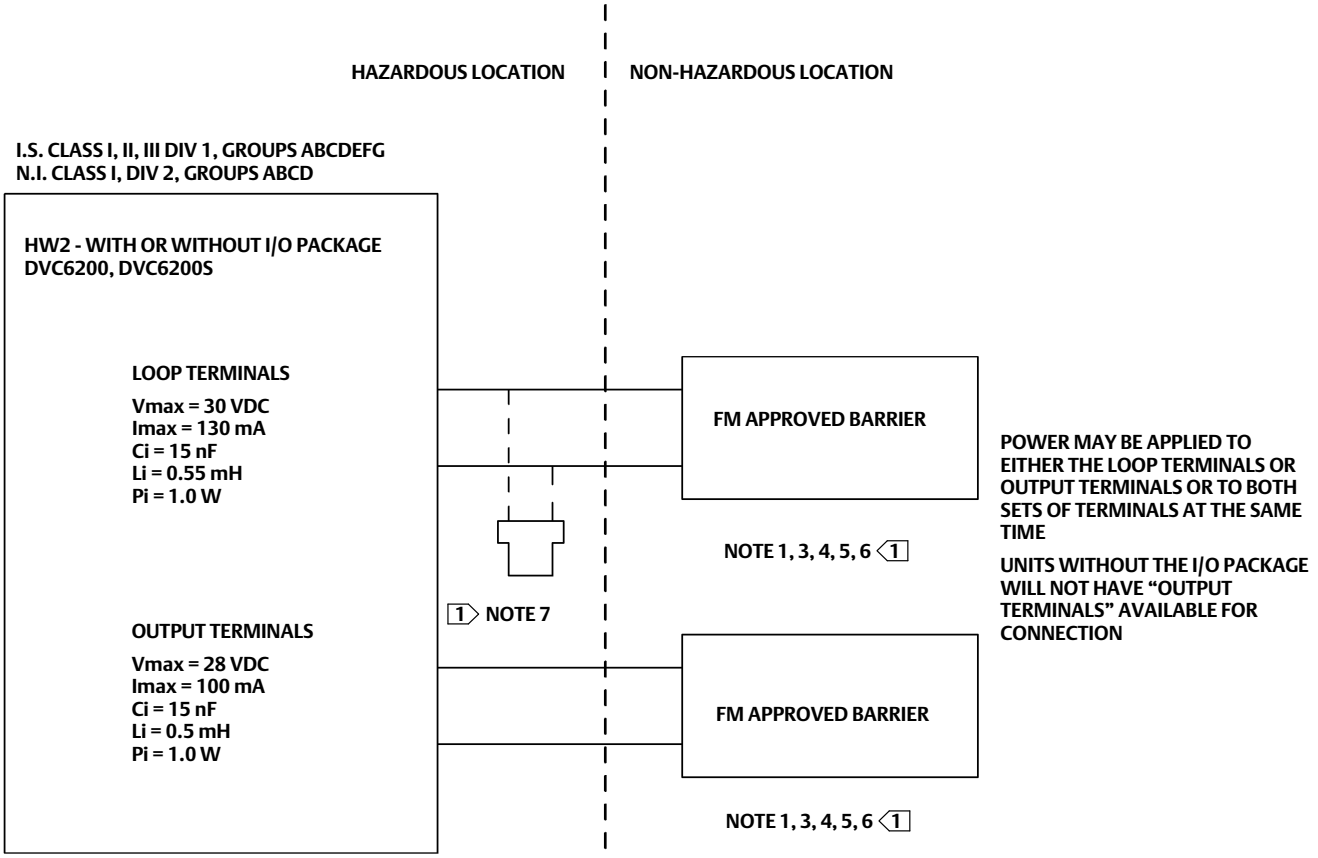

	WITH I/O PACKAGE	WITHOUT I/O PACKAGE
T CODE	T (amb)	T (amb)
T5	≤ 80°C	≤ 80°C
T6	≤ 61°C	≤ 74°C

1 SEE NOTES IN FIGURE 48

GE42819 Sheet 11, Rev. A

Figure 45. FM Loop Schematics FIELDVUE DVC6205, DVC6205 SIS, and DVC6215

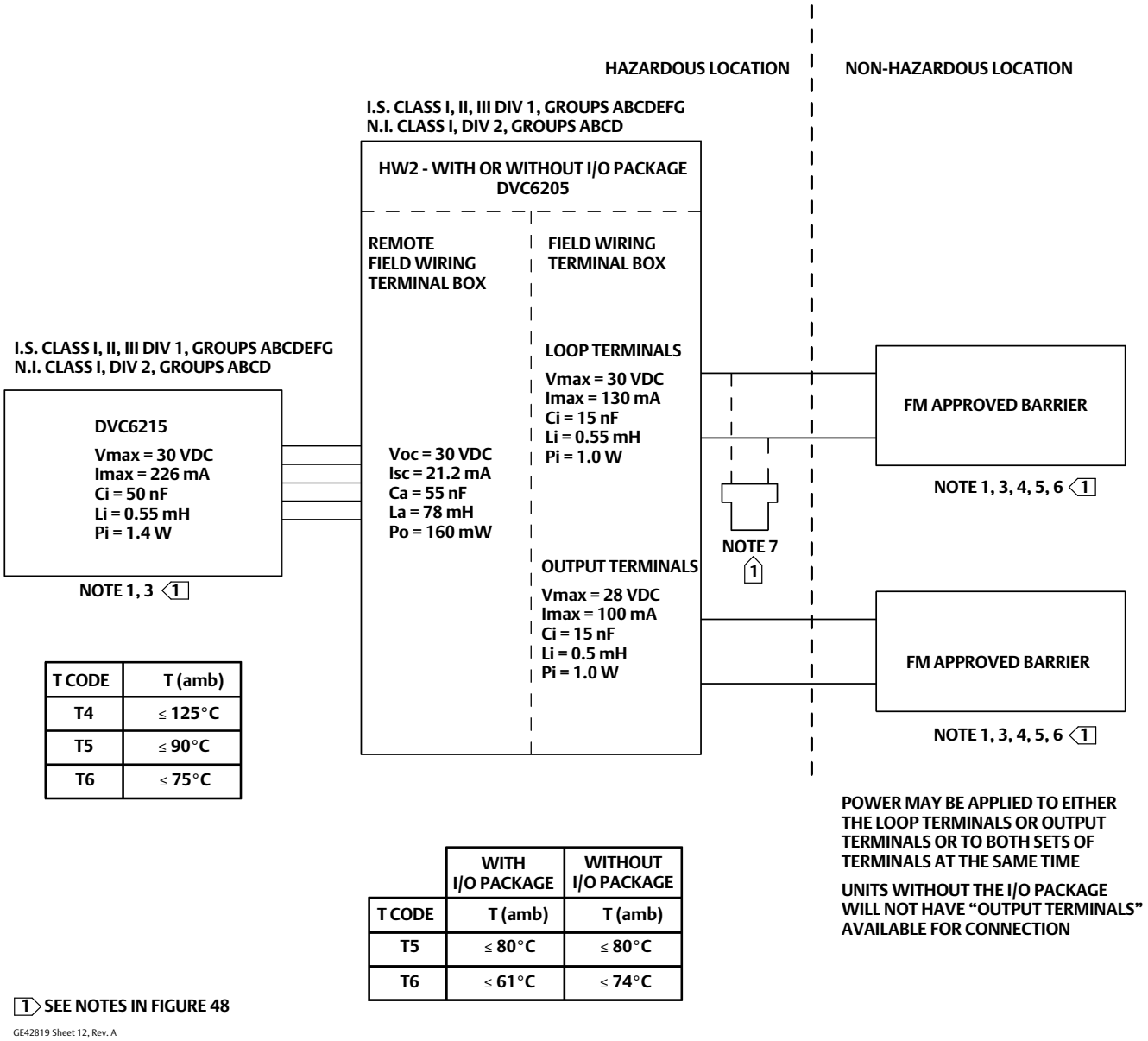

T CODE	T (amb)
T4	≤ 125°C
T5	≤ 90°C
T6	≤ 75°C

	WITH I/O PACKAGE	WITHOUT I/O PACKAGE
T CODE	T (amb)	T (amb)
T5	≤ 80°C	≤ 80°C
T6	≤ 61°C	≤ 74°C

Figure 46. FM Loop Schematics—FIELDVUE DVC6200f and DVC6200p

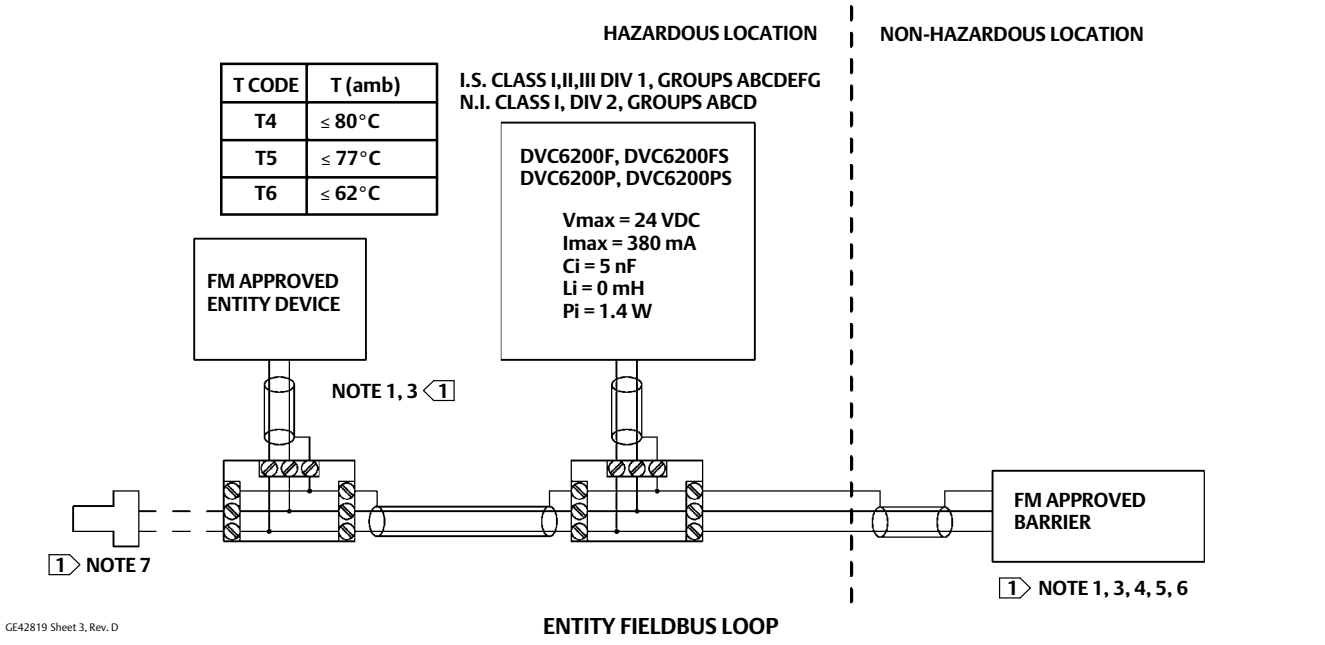

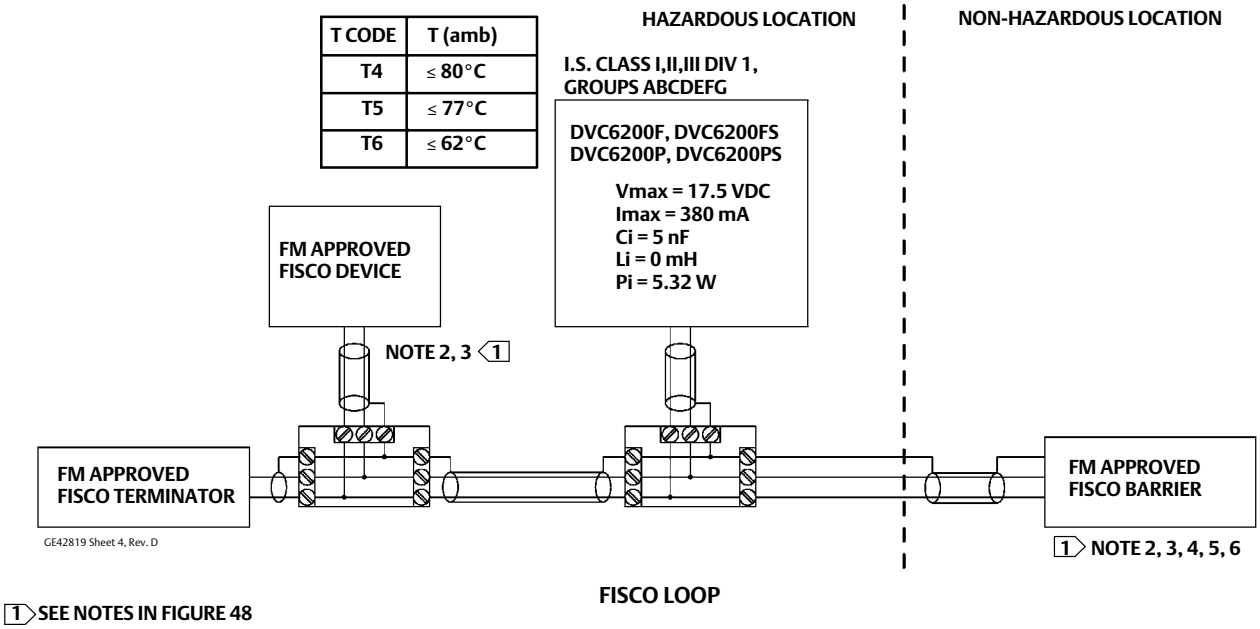

1 SEE NOTES IN FIGURE 48

Figure 47. FM Loop Schematics FIELDVUE DVC6205f, DVC6205p, and DVC6215

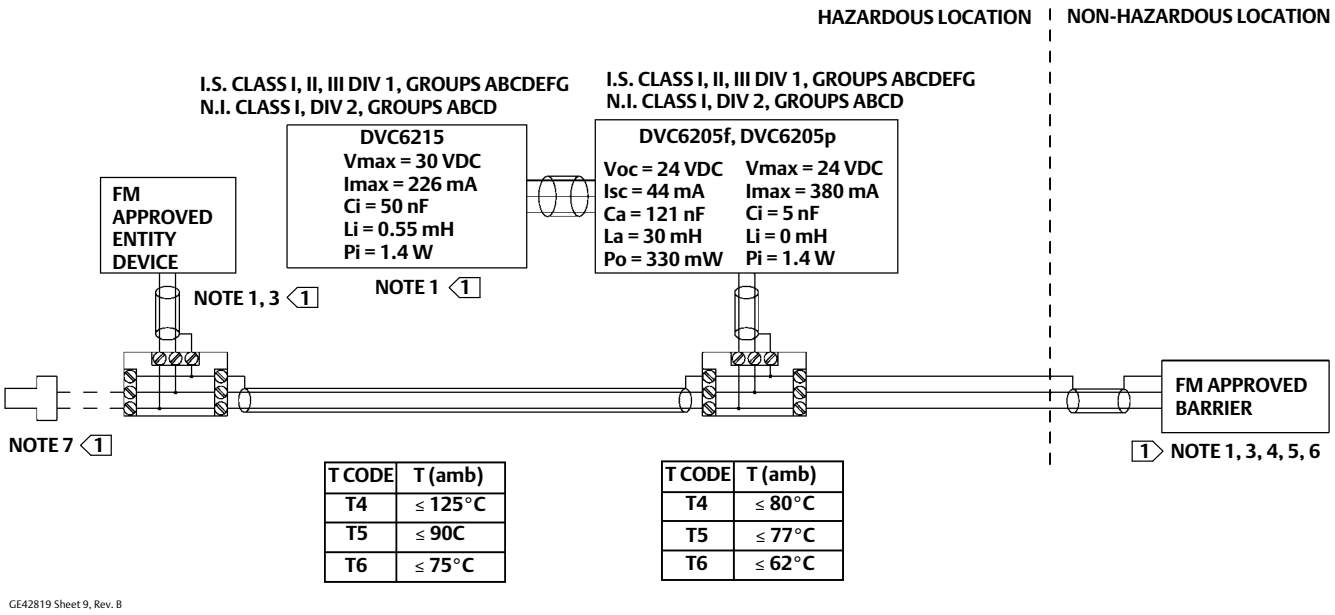

ENTITY FIELDBUS LOOP

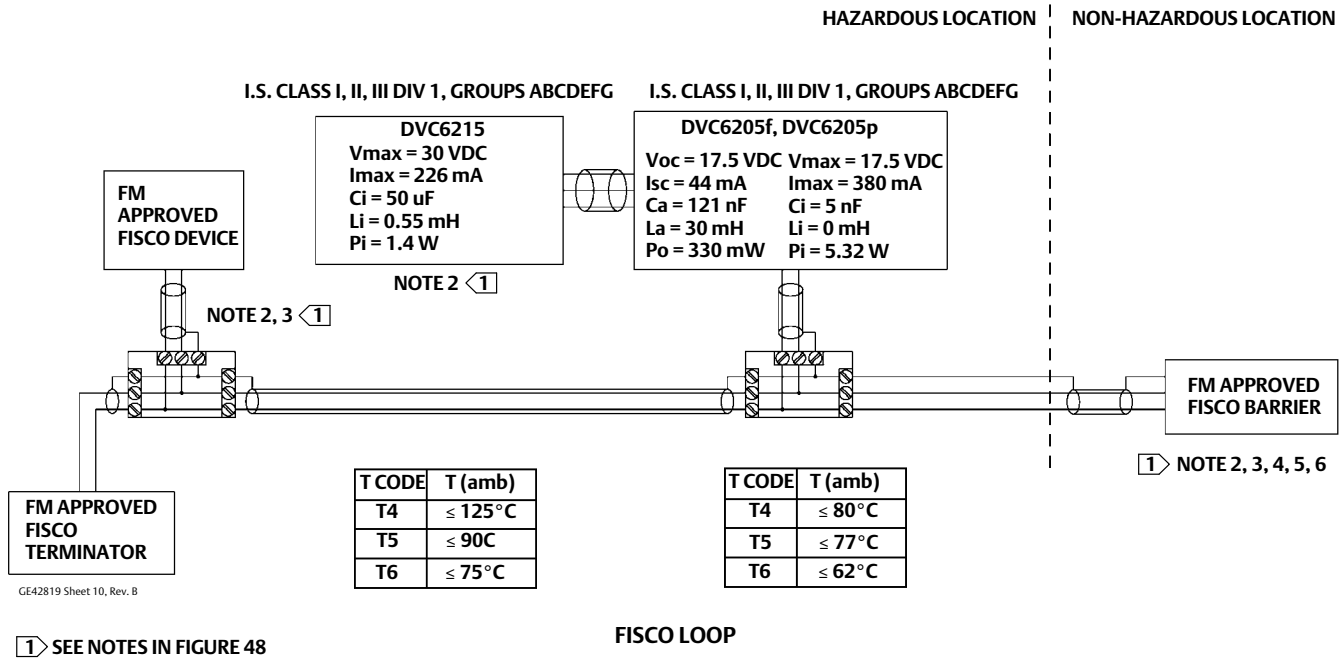

FISCO LOOP

1 SEE NOTES IN FIGURE 48

Figure 48. Notes for FM Loop Schematics

1 THE ENTITY CONCEPT ALLOWS INTERCONNECTION OF INTRINSICALLY SAFE APPARATUS TO ASSOCIATED APPARATUS NOT SPECIFICALLY EXAMINED IN SUCH COMBINATION. THE CRITERIA FOR INTERCONNECTION IS THAT THE VOLTAGE (Vmax OR Ui), THE CURRENT (Imax OR Ii), AND THE POWER (Pmax or Pi) OF THE INTRINSICALLY SAFE APPARATUS MUST BE EQUAL TO OR GREATER THAN THE VOLTAGE (Voc OR Uo), AND THE CURRENT (Isc OR Io), AND THE POWER(Po) DEFINED BY THE ASSOCIATED APPARATUS. IN ADDITION, THE SUM OF THE MAX UNPROTECTED CAPACITANCE (Ci) AND MAX UNPROTECTED INDUCTANCE (Li), INCLUDING THE INTERCONNECTING CABLING CAPACITANCE (Ccable) AND CABLING INDUCTANCE (Lcable) MUST BE LESS THAN THE ALLOWABLE CAPACITANCE (Ca) AND INDUCTANCE (La) DEFINED BY THE ASSOCIATED APPARATUS. IF THE ABOVE CRITERIA IS MET, THEN THE COMBINATION MAY BE CONNECTED.

Vmax or Ui ≥ Voc or Uo Imax or Ii ≥ Isc or Io Pmax or Pi ≥ Po Ci + Ccable ≤ Ca Li + Lcable ≤ La

2 THE FISCO CONCEPT ALLOWS INTERCONNECTION OF INTRINSICALLY SAFE APPARATUS TO ASSOCIATED APPARATUS NOT SPECIFICALLY EXAMINED IN SUCH COMBINATION. THE CRITERIA FOR THE INTERCONNECTION IS THAT THE VOLTAGE (Vmax OR Ui), CURRENT (Imax OR Ii), AND POWER (Pmax or Pi), WHICH AN INTRINSICALLY SAFE APPARATUS CAN RECEIVE AND REMAIN INTRINSICALLY SAFE, CONSIDERING FAULTS, MUST BE EQUAL TO OR GREATER THAN THE VOLTAGE (Voc OR Uo), CURRENT (Isc OR Io), AND POWER (Po) LEVELS WHICH CAN BE DELIVERED BY THE ASSOCIATED APPARATUS, CONSIDERING FAULTS AND APPLICABLE FACTORS. IN ADDITION THE MAXIMUM UNPROTECTED CAPACITANCE (Ci) AND INDUCTANCE (Li) OF EACH APPARATUS (OTHER THAN THE TERMINATION) CONNECTED TO THE FIELDBUS MUST BE LESS THAN OR EQUAL TO 5 nF AND 10 uH RESPECTIVELY.

IN EACH SEGMENT ONLY ONE ACTIVE DEVICE, NORMALLY THE ASSOCIATED APPARATUS, IS ALLOWED TO PROVIDE THE NECESSARY ENERGY FOR THE FIELDBUS SYSTEM. THE VOLTAGE (Uo OR Voc OR Vt) OF THE ASSOCIATED APPARATUS HAS TO BE LIMITED TO THE RANGE OF 9 V TO 17.5 VDC. ALL OTHER EQUIPMENT CONNECTED TO THE BUS CABLE HAS TO BE PASSIVE, MEANING THAT THEY ARE NOT ALLOWED TO PROVIDE ENERGY TO THE SYSTEM, EXCEPT FOR A LEAKAGE CURRENT OF 50 uA FOR EACH CONNECTED DEVICE. SEPARATELY POWERED EQUIPMENT NEEDS A GALVANIC ISOLATION TO ASSURE THAT THE INTRINSICALLY SAFE FIELDBUS CIRCUIT REMAINS PASSIVE.

THE CABLE USED TO CONNECT THE DEVICES NEEDS TO HAVE THE PARAMETERS IN THE FOLLOWING RANGE:

LOOP RESISTANCE R': 15 TO 150 ohms/km
INDUCTANCE PER UNIT LENGTH L: 0.4 TO 1 mH/km
CAPACITANCE PER UNIT LENGTH C': 80 TO 200 nF/km
C' = C' LINE/LINE + 0.5' LINE/SCREEN, IF BOTH LINES ARE FLOATING OR
C' = C' LINE/LINE + C' LINE/SCREEN, IF THE SCREEN IS CONNECTED TO ONE LINE.
LENGTH OF SPLICE: < 1 m (T-BOX MUST ONLY CONTAIN TERMINAL CONNECTIONS WITH NO ENERGY STORAGE CAPABILITY)
LENGTH OF SPUR CABLE: < 30 M
LENGTH OF TRUNK CABLE: < 1 km

AT EACH END OF THE TRUNK CABLE AN APPROVED INFALLIBLE TERMINATION WITH THE FOLLOWING PARAMETERS IS SUITABLE:
R = 90 TO 100 ohms AND C = 0 TO 2.2 uF
NOTE, A BUILT-IN TERMINATOR IS INCLUDED IN THE FIELD SIDE AND A SELECTABLE TERMINATOR IS AVAILABLE ON THE HOST SIDE.

THE NUMBER OF PASSIVE DEVICES CONNECTED TO THE BUS SEGMENT IS NOT LIMITED IN THE FISCO CONCEPT FOR INTRINSICALLY SAFE REASONS. IF THE ABOVE RULES ARE RESPECTED, UP TO A TOTAL LENGTH OF 1000 m (SUM OF THE LENGTH OF THE TRUNK CABLE AND ALL SPUR CABLES), THE INDUCTANCE AND CAPACITANCE OF THE CABLE WILL NOT IMPAIR THE INTRINSIC SAFETY OF THE INSTALLATION.

3 INSTALLATION MUST BE IN ACCORDANCE WITH THE NATIONAL ELECTRICAL CODE (NEC) AND ANSI/ISA RP12.6.01.

4 MAXIMUM SAFE AREA VOLTAGE SHOULD NOT EXCEED 250 Vrms.

5 RESISTANCE BETWEEN INTRINSICALLY SAFE GROUND AND EARTH GROUND MUST BE LESS THAN ONE OHM

6 LOOPS MUST BE CONNECTED ACCORDING TO THE BARRIER MANUFACTURER'S INSTRUCTIONS.

7 IF HAND-HELD COMMUNICATOR OR MULTIPLEXER IS USED, IT MUST BE FM APPROVED WITH ENTITY PARAMETERS AND INSTALLED PER THE MANUFACTURER'S CONTROL DRAWINGS.

⚠ WARNING

THE APPARATUS ENCLOSURE CONTAINS ALUMINUM AND IS CONSIDERED TO CONSTITUTE A POTENTIAL RISK OF IGNITION BY IMPACT AND FRICTION. AVOID IMPACT AND FRICTION DURING INSTALLATION AND USE TO PREVENT RISK OF IGNITION.

GE42819, Sheet 8, Rev. D

ATEX

Flameproof ⟨Ex⟩ II 2 G

⚠ WARNING

Do not open while energized.

Potential electrostatic charging hazard. See warning on page 2.

DVC6200 and DVC6205 Series (HART HW1 & HW2, SIS, FOUNDATION FIELDBUS, PROFIBUS)

Ex d IIC T5 (Ta ≤ 85°C)
Ex d IIC T6 (Ta ≤ 80°C)

Operating ambient temperature
Standard construction -40°C to +85°C,
Extreme temperature construction -52°C to +85°C

Type n ⟨Ex⟩ II 3 G

⚠ WARNING

Do not open while energized.

Potential electrostatic charging hazard. See warning on page 2.

DVC6200 and DVC6205 Series (HART HW1 & HW2, SIS, FOUNDATION FIELDBUS, PROFIBUS)

Ex nC IIC T5 (Ta ≤ 80°C)
Ex nC IIC T6 (Ta ≤ 75°C)

Operating ambient temperature
Standard construction -40°C to +80°C,
Extreme temperature construction -52°C to +80°C

Intrinsically Safe

⚠ WARNING

Potential electrostatic charging hazard. See warning on page 2.

DVC6200 and DVC6205 Series (HART HW1 & HW2, SIS, FOUNDATION FIELDBUS, PROFIBUS)

⟨Ex⟩ II 1 GD
Operating ambient temperature
Standard construction -40°C to +80°C,
Extreme temperature construction -52°C to +80°C

DVC6215

⟨Ex⟩ II 1 G
- 52°C ≤ Ta ≤ + 125°C

Intrinsically safe when connected per control drawing GE60771, as shown in the following figures

DVC6200 HW1 . . . . . figure 49 and 54
DVC6200 HW2, DVC6200 SIS . . . . . figure 50 and 54
DVC6205, DVC6205 SIS, and DVC6215 Remote Mount . . . . . figure 51 and 54
DVC6200f and DVC6200p . . . . . figure 52 and 54
DVC6205f, DVC6205p, and DVC6215 Remote Mount . . . . . figure 53 and 54

Special Conditions for Safe Use; Intrinsically Safe Applications

- This apparatus can only be connected to an intrinsically safe certified equipment and this combination must be compatible as regards the intrinsically safe rules.
- Covered by standards EN 60079-0 (2009), EN 60079-11 (2012), EN 60079-26 (2007).
- For the model with aluminum body: the apparatus must not be submitted to frictions or mechanical impacts.

Figure 49. ATEX Loop Schematic—FIELDVUE DVC6200 HW1

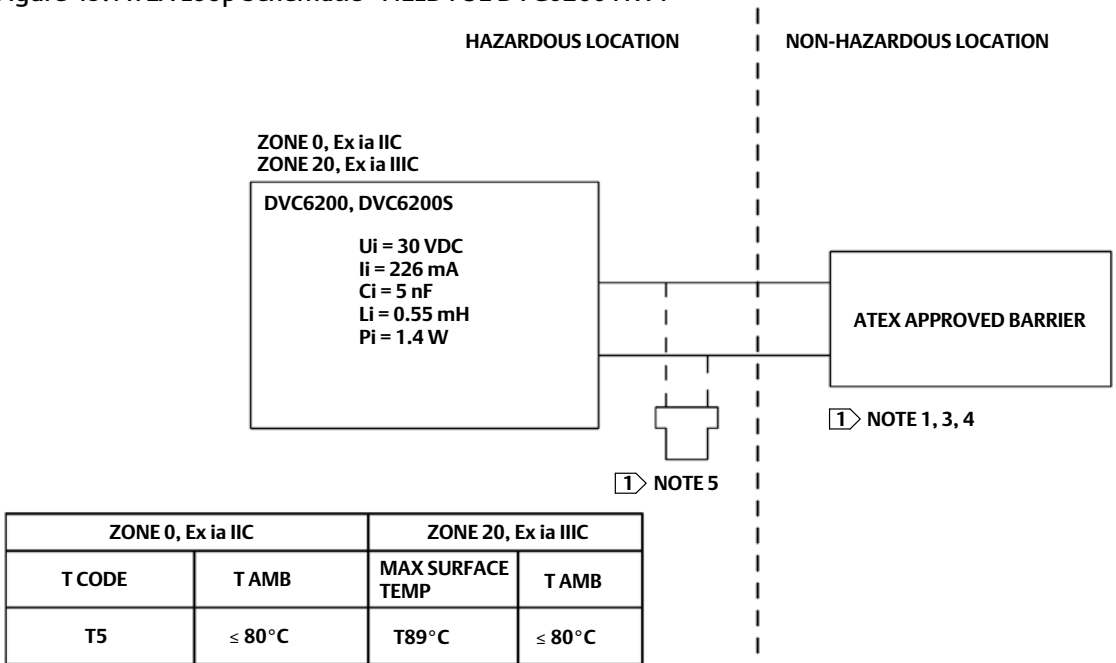

ZONE 0, Ex ia IIC		ZONE 20, Ex ia IIIC	
T CODE	T AMB	MAX SURFACE TEMP	T AMB
T5	≤ 80°C	T89°C	≤ 80°C
T6	≤ 75°C	T85°C	≤ 76°C

1 SEE NOTES IN FIGURE 54

GE60771 sheet 3, Rev. B

Figure 50. ATEX Loop Schematics—FIELDVUE DVC6200 HW2 and DVC6200 SIS

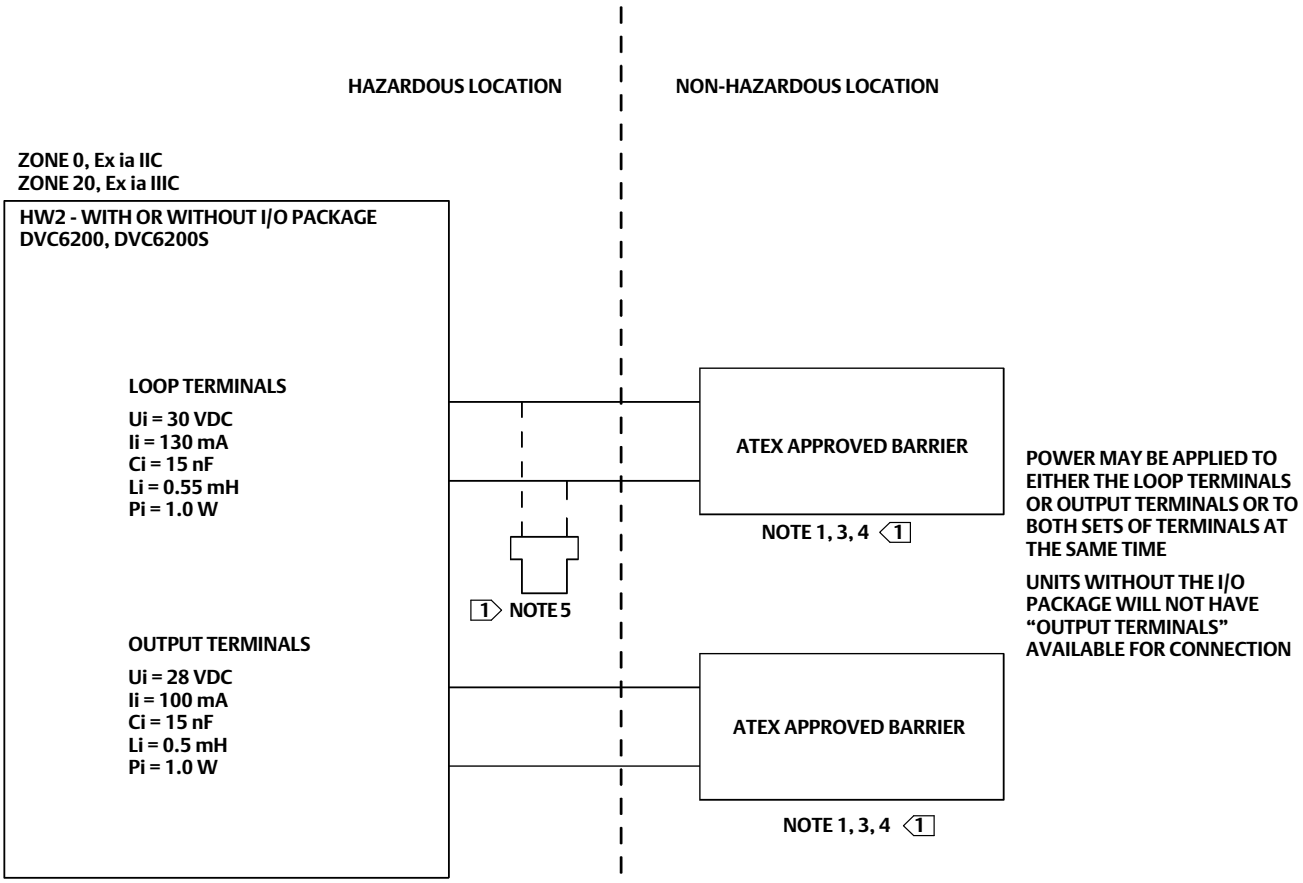

ZONE 0, Ex ia IIC				ZONE 20, Ex ia IIIC			
WITHOUT I/O PACKAGE		WITH I/O PACKAGE		WITHOUT I/O PACKAGE		WITH I/O PACKAGE	
T CODE	T AMB	T CODE	T AMB	MAX SURFACE TEMP	T AMB	MAX SURFACE TEMP	T AMB
T5	≤ 80°C	T5	≤ 80°C	T91°C	≤ 80°C	T104°C	≤ 80°C
T6	≤ 74°C	T6	≤ 61°C	T85°C	≤ 74°C	T85°C	≤ 61°C

1 SEE NOTES IN FIGURE 54

GE60771 Sheet 11, Rev. B

Figure 51. ATEX Loop Schematics FIELDVUE DVC6205, DVC6205 SIS, and DVC6215

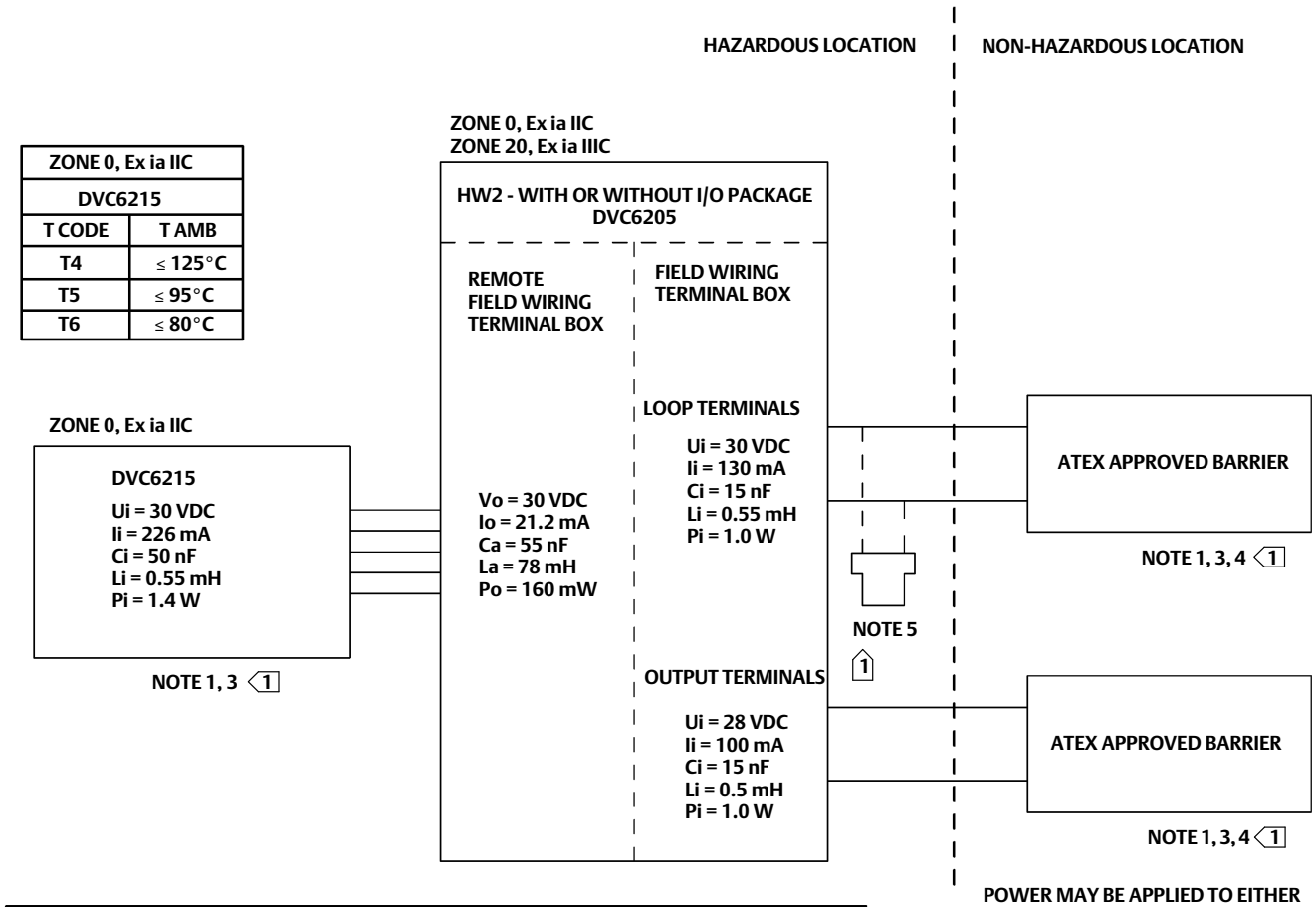

ZONE 0, Ex ia IIC	
DVC6215	
T CODE	T AMB
T4	≤ 125°C
T5	≤ 95°C
T6	≤ 80°C

	ZONE 0, Ex ia IIC				ZONE 20, Ex ia IIIC			
	WITHOUT I/O PACKAGE		WITH I/O PACKAGE		WITHOUT I/O PACKAGE		WITH I/O PACKAGE	
TYPE	T CODE	T AMB	T CODE	T AMB	MAX SURFACE TEMP	T AMB	MAX SURFACE TEMP	T AMB
DVC6205	T5	≤ 80°C	T5	≤ 80°C	T91°C	≤ 80°C	T104°C	≤ 80°C
	T6	≤ 74°C	T6	≤ 61°C	T85°C	≤ 74°C	T85°C	≤ 61°C

1 SEE NOTES IN FIGURE 54

GE60771 Sheet 12, Rev. B

Figure 52. ATEX Loop Schematics—FIELDVUE DVC6200f and DVC6200p

ZONE 0 Ex ia IIC		ZONE 20 Ex ia IIIC	
T CODE	T AMB	MAX SURFACE TEMP	T AMB
T4	≤ 80°C	T103°C	≤ 80°C
T5	≤ 77°C	T100°C	≤ 77°C
T6	≤ 62°C	T85°C	≤ 62°C

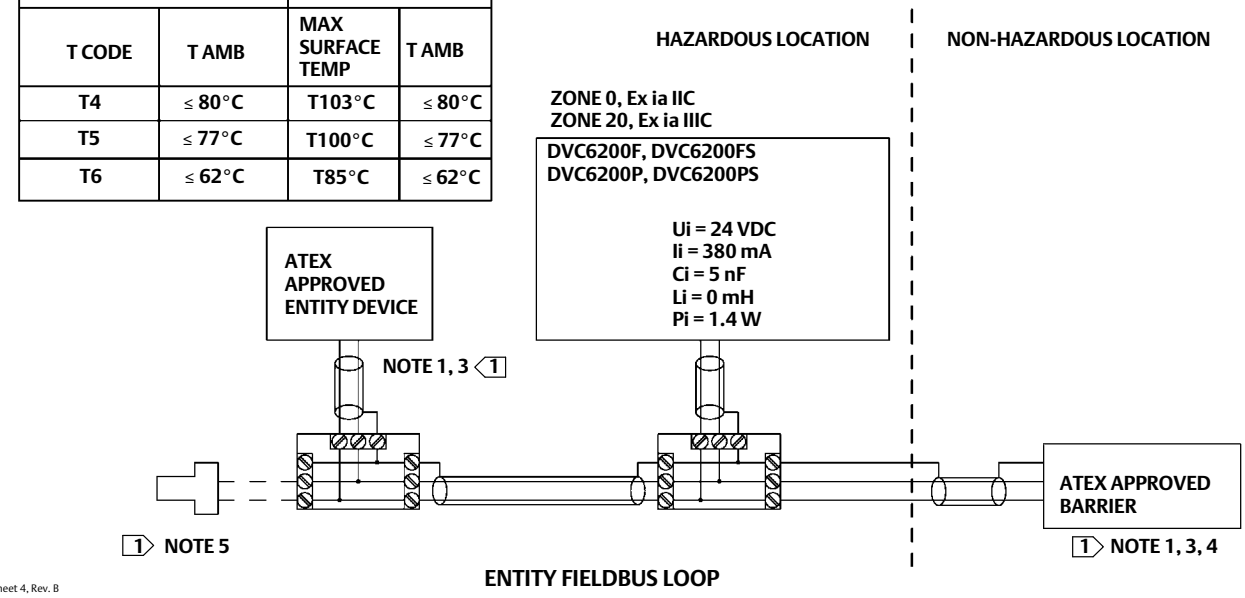

ENTITY FIELDBUS LOOP

ZONE 0 Ex ia IIC		ZONE 20 Ex ia IIIC	
T CODE	T AMB	MAX SURFACE TEMP	T AMB
T4	≤ 80°C	T103°C	≤ 80°C
T5	≤ 77°C	T100°C	≤ 77°C
T6	≤ 62°C	T85°C	≤ 62°C

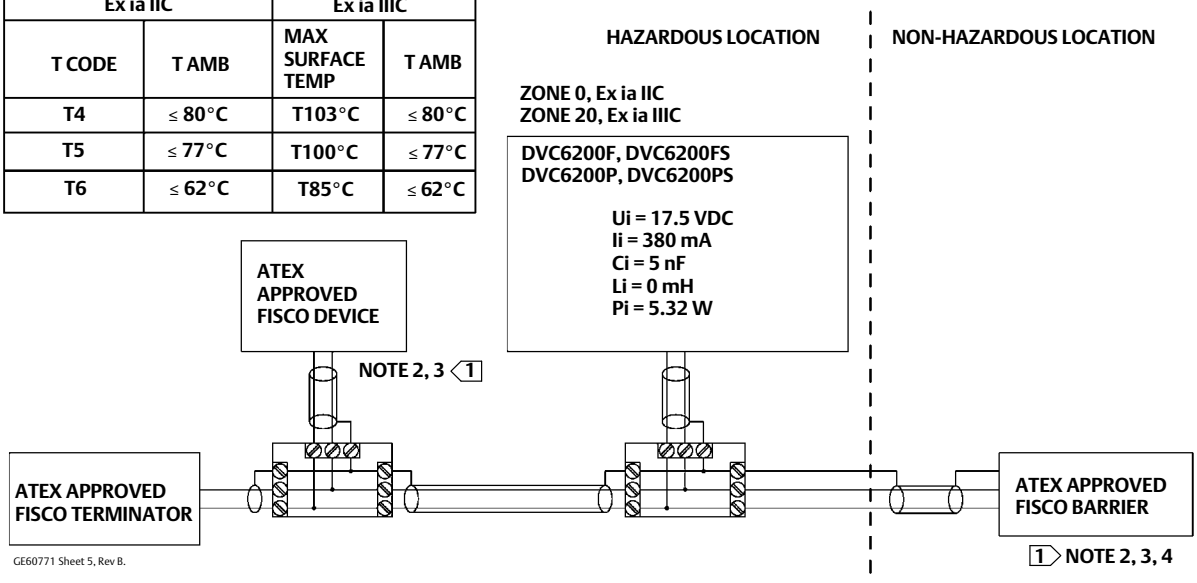

FISCO LOOP

1 SEE NOTES IN FIGURE 54

Figure 53. ATEX Loop Schematics FIELDVUE DVC6205f, DVC6205p, and DVC6215

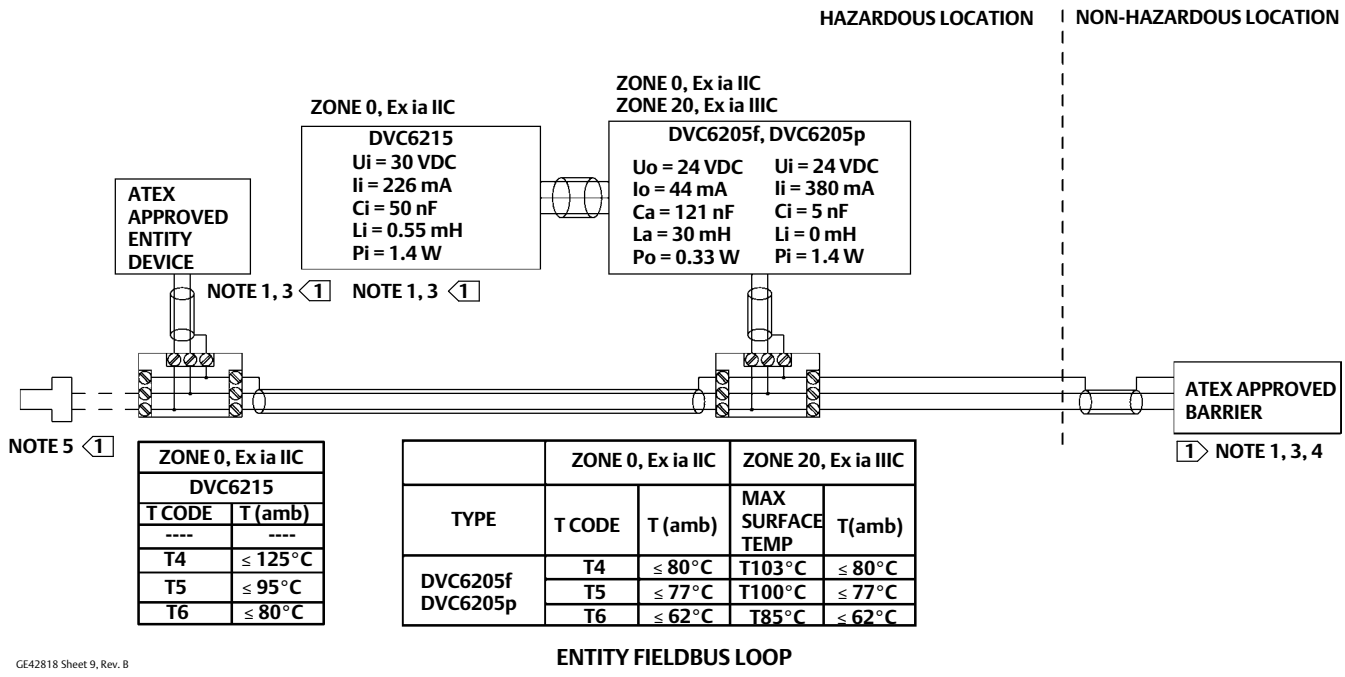

ZONE 0, Ex ia IIC	
DVC6215	
T CODE	T (amb)
----	----
T4	≤ 125°C
T5	≤ 95°C
T6	≤ 80°C

	ZONE 0, Ex ia IIC		ZONE 20, Ex ia IIIC	
TYPE	T CODE	T (amb)	MAX SURFACE TEMP	T(amb)
DVC6205f DVC6205p	T4	≤ 80°C	T103°C	≤ 80°C
	T5	≤ 77°C	T100°C	≤ 77°C
	T6	≤ 62°C	T85°C	≤ 62°C

GE42818 Sheet 9, Rev. B

ENTITY FIELDBUS LOOP

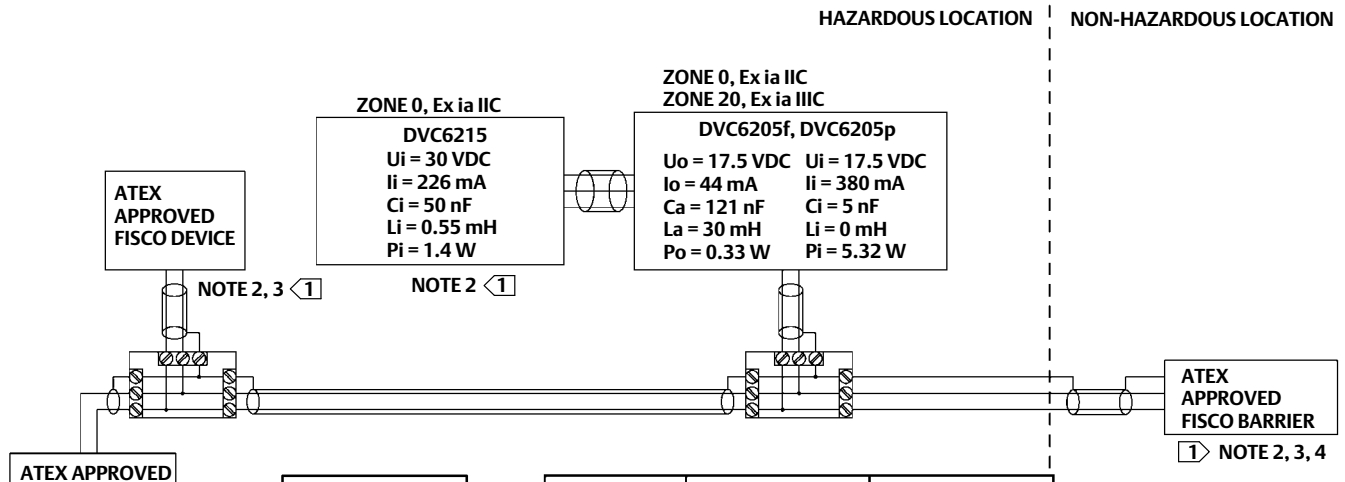

ZONE 0, Ex ia IIC	
DVC6215	
T CODE	T (amb)
----	----
T4	≤ 125°C
T5	≤ 95°C
T6	≤ 80°C

	ZONE 0, Ex ia IIC		ZONE 20, Ex ia IIIC	
TYPE	T CODE	T (amb)	MAX SURFACE TEMP	T (amb)
DVC6205f DVC6205p	T4	≤ 80°C	T103°C	≤ 80°C
	T5	≤ 77°C	T100°C	≤ 77°C
	T6	≤ 62°C	T85°C	≤ 62°C

GE42818 Sheet 10, Rev. B

1 SEE NOTES IN FIGURE 54

FISCO LOOP

Figure 54. Notes for ATEX Loop Schematics

1 THE ENTITY CONCEPT ALLOWS INTERCONNECTION OF INTRINSICALLY SAFE APPARATUS TO ASSOCIATED APPARATUS NOT SPECIFICALLY EXAMINED IN SUCH COMBINATION. THE CRITERIA FOR INTERCONNECTION IS THAT THE VOLTAGE (Vmax or Ui), THE CURRENT (Imax or Ii), AND THE POWER (Pmax or Pi) OF THE INTRINSICALLY SAFE APPARATUS MUST BE EQUAL TO OR GREATER THAN THE VOLTAGE (Voc or Uo), AND THE CURRENT (Isc or Io), AND THE POWER(Po) DEFINED BY THE ASSOCIATED APPARATUS. IN ADDITION, THE SUM OF THE MAX UNPROTECTED CAPACITANCE (Ci) AND MAX UNPROTECTED INDUCTANCE (Li), INCLUDING THE INTERCONNECTING CABLING CAPACITANCE (Ccable) AND CABLING INDUCTANCE (Lcable) MUST BE LESS THAN THE ALLOWABLE CAPACITANCE (Ca) AND INDUCTANCE (La) DEFINED BY THE ASSOCIATED APPARATUS. IF THE ABOVE CRITERIA IS MET, THEN THE COMBINATION MAY BE CONNECTED.

Vmax or Ui ≥ Voc or Uo Imax or Ii ≥ Isc or Io Pmax or Pi ≥ Po Ci + Ccable ≤ Ca Li + Lcable ≤ La

2 THE FISCO CONCEPT ALLOWS INTERCONNECTION OF INTRINSICALLY SAFE APPARATUS TO ASSOCIATED APPARATUS NOT SPECIFICALLY EXAMINED IN SUCH COMBINATION. THE CRITERIA FOR THE INTERCONNECTION IS THAT THE VOLTAGE (Vmax or Ui), CURRENT (Imax or Ii), AND POWER (Pmax or Pi), WHICH AN INTRINSICALLY SAFE APPARATUS CAN RECEIVE AND REMAIN INTRINSICALLY SAFE, CONSIDERING FAULTS, MUST BE EQUAL TO OR GREATER THAN THE VOLTAGE (Voc or Uo), CURRENT (Isc or Io), AND POWER (Po) LEVELS WHICH CAN BE DELIVERED BY THE ASSOCIATED APPARATUS, CONSIDERING FAULTS AND APPLICABLE FACTORS. IN ADDITION THE MAXIMUM UNPROTECTED CAPACITANCE (Ci) AND INDUCTANCE (Li) OF EACH APPARATUS (OTHER THAN THE TERMINATION) CONNECTED TO THE FIELDBUS MUST BE LESS THAN OR EQUAL TO 5 nF AND 10 uH RESPECTIVELY.

IN EACH SEGMENT ONLY ONE ACTIVE DEVICE, NORMALLY THE ASSOCIATED APPARATUS, IS ALLOWED TO PROVIDE THE NECESSARY ENERGY FOR THE FIELDBUS SYSTEM. THE VOLTAGE (Uo or Voc or Vt) OF THE ASSOCIATED APPARATUS HAS TO BE LIMITED TO THE RANGE OF 9 V TO 17.5 VDC. ALL OTHER EQUIPMENT CONNECTED TO THE BUS CABLE HAS TO BE PASSIVE, MEANING THAT THEY ARE NOT ALLOWED TO PROVIDE ENERGY TO THE SYSTEM, EXCEPT FOR A LEAKAGE CURRENT OF 50 uA FOR EACH CONNECTED DEVICE. SEPARATELY POWERED EQUIPMENT NEEDS A GALVANIC ISOLATION TO ASSURE THAT THE INTRINSICALLY SAFE FIELDBUS CIRCUIT REMAINS PASSIVE.

THE CABLE USED TO CONNECT THE DEVICES NEEDS TO HAVE THE PARAMETERS IN THE FOLLOWING RANGE:

LOOP RESISTANCE R': 15 TO 150 ohms/km
INDUCTANCE PER UNIT LENGTH L: 0.4 TO 1 mH/km
CAPACITANCE PER UNIT LENGTH C': 80 TO 200 nF/km
C' = C' LINE/LINE + 0.5' LINE/SCREEN, IF BOTH LINES ARE FLOATING OR
C' = C' LINE/LINE + C' LINE/SCREEN, IF THE SCREEN IS CONNECTED TO ONE LINE.
LENGTH OF SPLICE: < 1 m (T-BOX MUST ONLY CONTAIN TERMINAL CONNECTIONS WITH NO ENERGY STORAGE CAPABILITY)
LENGTH OF SPUR CABLE: < 30 M
LENGTH OF TRUNK CABLE: < 1 km

AT EACH END OF THE TRUNK CABLE AN APPROVED INFALLIBLE TERMINATION WITH THE FOLLOWING PARAMETERS IS SUITABLE:
R = 90 TO 100 ohms AND C = 0 TO 2.2 uF
NOTE, A BUILT-IN TERMINATOR IS INCLUDED IN THE FIELD SIDE AND A SELECTABLE TERMINATOR IS AVAILABLE ON THE HOST SIDE.

THE NUMBER OF PASSIVE DEVICES CONNECTED TO THE BUS SEGMENT IS NOT LIMITED IN THE FISCO CONCEPT FOR INTRINSICALLY SAFE REASONS. IF THE ABOVE RULES ARE RESPECTED, UP TO A TOTAL LENGTH OF 1000 m (SUM OF THE LENGTH OF THE TRUNK CABLE AND ALL SPUR CABLES), THE INDUCTANCE AND CAPACITANCE OF THE CABLE WILL NOT IMPAIR THE INTRINSIC SAFETY OF THE INSTALLATION.

3 INSTALLATION MUST BE IN ACCORDANCE WITH THE NATIONAL WIRING PRACTICES OF THE COUNTRY IN USE.

4 LOOPS MUST BE CONNECTED ACCORDING TO THE BARRIER MANUFACTURER'S INSTRUCTIONS.

5 IF HAND-HELD COMMUNICATOR OR MULTIPLEXER IS USED, IT MUST BE ATEX APPROVED WITH ENTITY PARAMETERS AND INSTALLED PER THE MANUFACTURER'S CONTROL DRAWINGS.

GE60771 Sheet 2, Rev. B

IECEx

Flameproof

⚠ WARNING

Do not open while energized.

Potential electrostatic charging hazard. See warning on page 2.

DVC6200 and DVC6205 Series (HART HW1 & HW2, SIS, FOUNDATION FIELDBUS, PROFIBUS)

Ex d IIC T5 (Ta ≤ 80°C) / T6 (Ta ≤ 75°C)
30 V max, 20 mA
IP66

DVC6215 Remote Mount

Ex d IIC T4 (Ta ≤ 125°C) / T5 (Ta ≤ 95°C) / T6 (Ta ≤ 80°C)
30 V max, 20 mA
IP66

Type n

⚠ WARNING

Do not open while energized.

Potential electrostatic charging hazard. See warning on page 2.

DVC6200 and DVC6205 Series (HART HW1 & HW2, SIS, FOUNDATION FIELDBUS, PROFIBUS)

Ex nC IIC T5 (Ta ≤ 80°C) / T6 (Ta ≤ 75°C)
30 V max, 20 mA
IP66

DVC6215 Remote Mount

Ex nA IIC T4 (Ta ≤ 125°C) / T5 (Ta ≤ 95°C) / T6 (Ta ≤ 80°C)
30 V max, 20 mA
IP66

Intrinsically Safe

⚠ WARNING

Potential electrostatic charging hazard. See warning on page 2.

Ex ia IIC
IP66
Intrinsically safe when connected per drawing GE42990, as shown in the following figures

DVC6200 HW1 . . . . . figure 55 and 60
DVC6200 HW2 and DVC6200 SIS . . . . . figure 56 and 60
DVC6205, DVC6205 SIS, and DVC6215 Remote Mount . . . . . figure 57 and 60
DVC6200f and DVC6200p . . . . . figure 58 and 60
DVC6205f, DVC6205p, and DVC6215 Remote Mount . . . . . figure 59 and 60

Figure 55. IECEx Schematic—FIELDVUE DVC6200 HW1

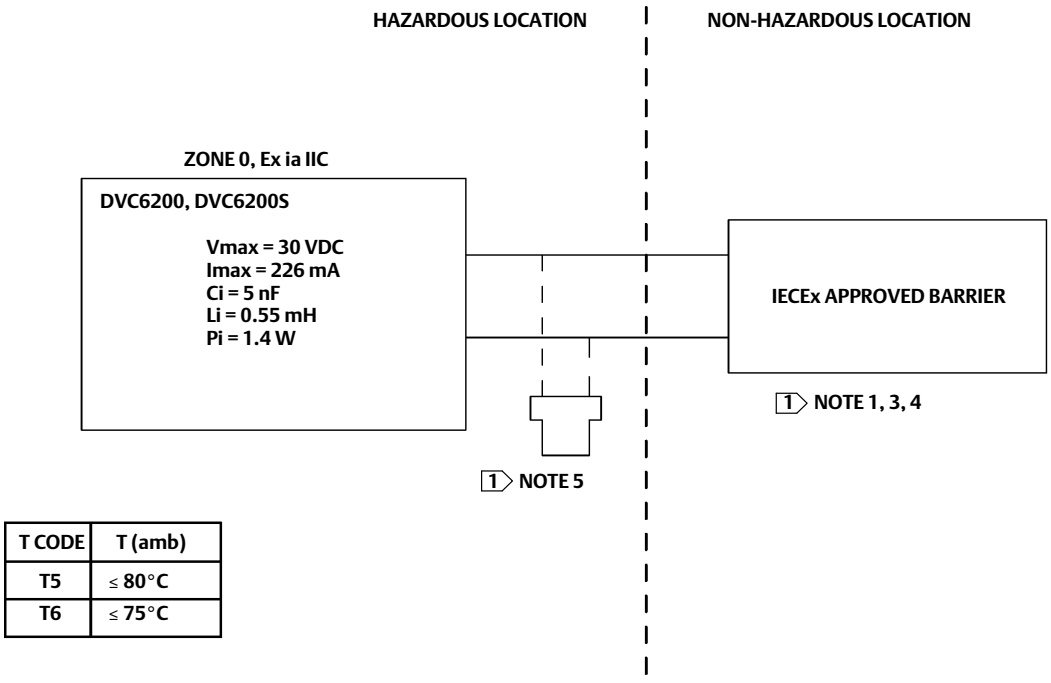

Figure 56. IECEx Loop Schematics—FIELDVUE DVC6200 HW2 and DVC6200 SIS

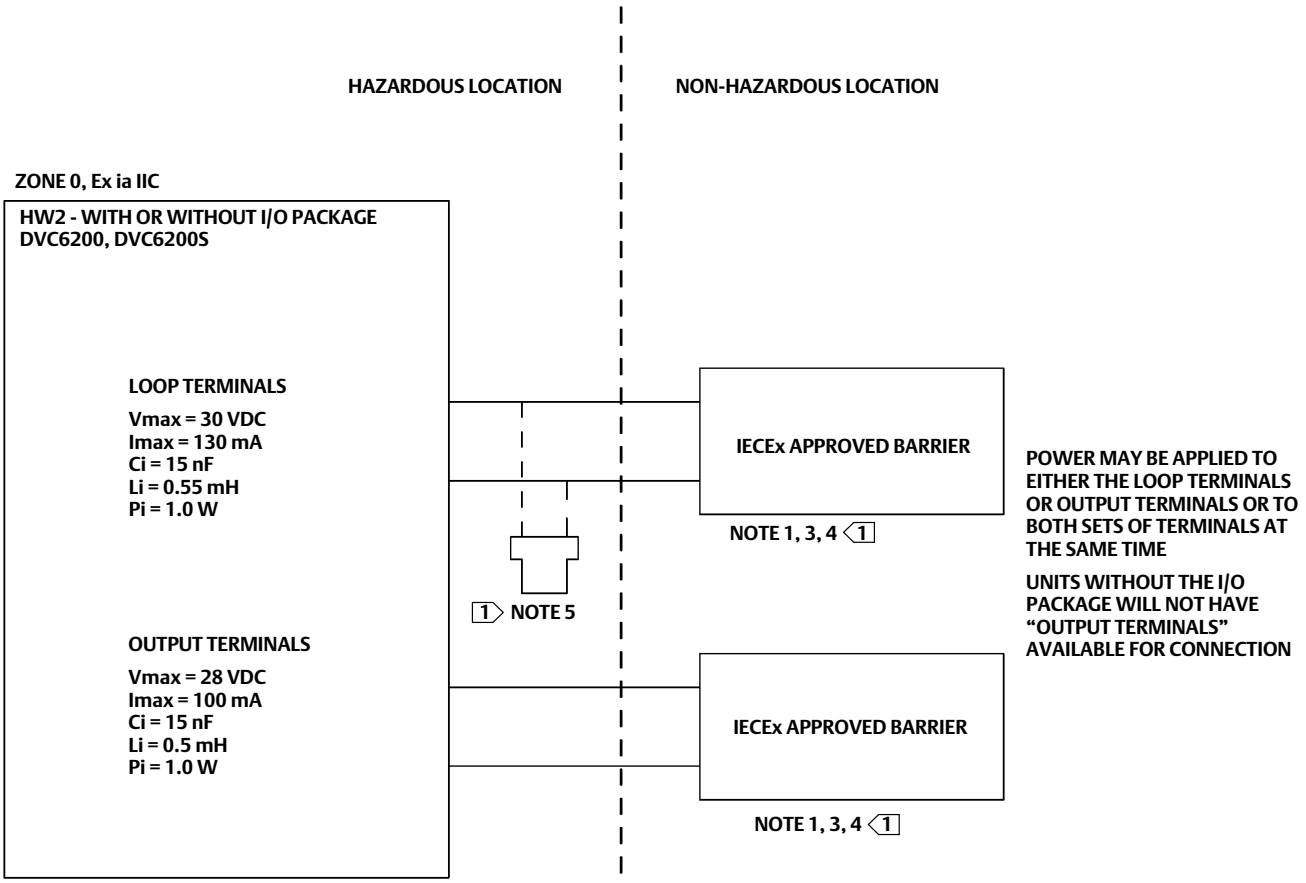

	WITH I/O PACKAGE	WITHOUT I/O PACKAGE
T CODE	T (amb)	T(amb)
T5	≤ 80°C	≤ 80°C
T6	≤ 61°C	≤ 74°C

1 SEE NOTES IN FIGURE 60

GE42990 Sheet 11, Rev. B

Figure 57. IECEx Loop Schematics FIELDVUE DVC6205, DVC6205 SIS, and DVC6215

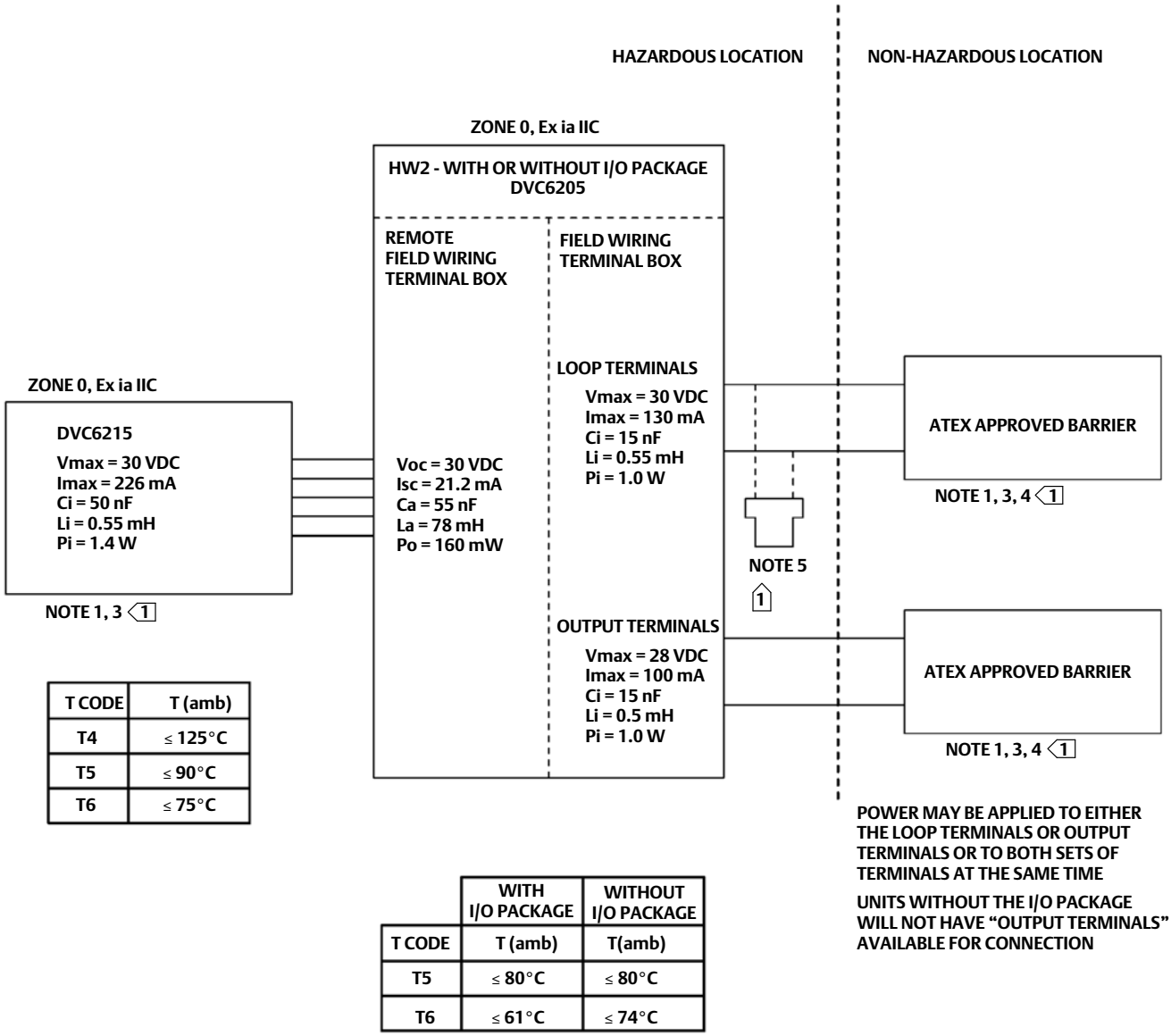

T CODE	T (amb)
T4	≤ 125°C
T5	≤ 90°C
T6	≤ 75°C

	WITH I/O PACKAGE	WITHOUT I/O PACKAGE
T CODE	T (amb)	T(amb)
T5	≤ 80°C	≤ 80°C
T6	≤ 61°C	≤ 74°C

1 SEE NOTES IN FIGURE 60

GE42990 Sheet 12, Rev. B

Figure 58. IECEx Loop Schematics—FIELDVUE DVC6200f and DVC6200p

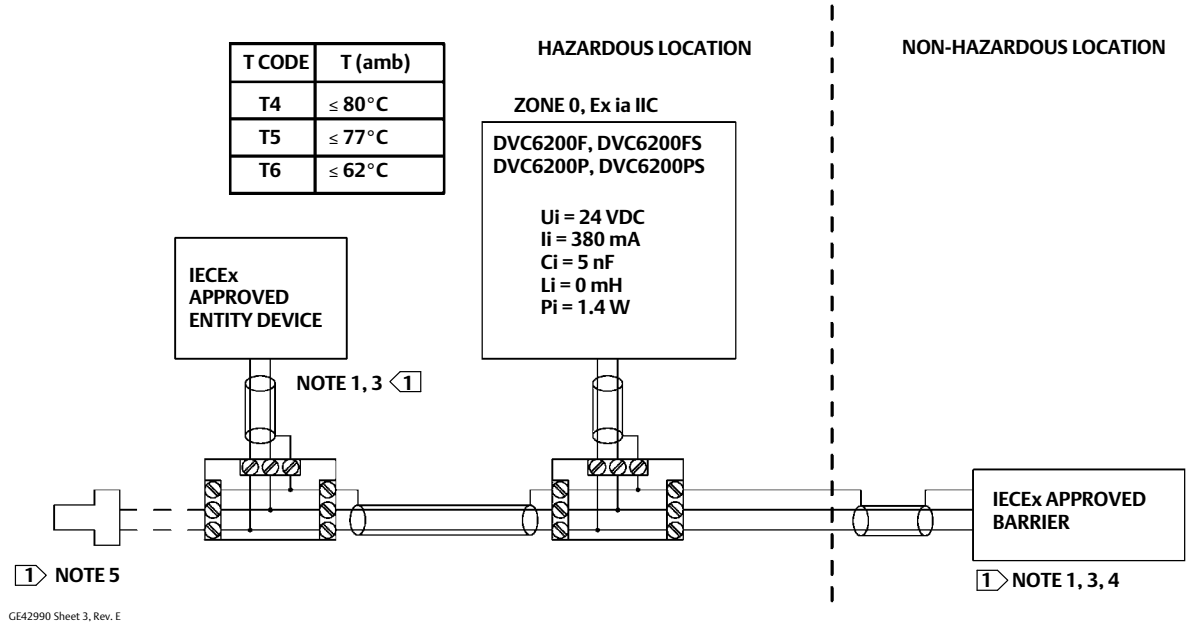

ENTITY FIELDBUS LOOP

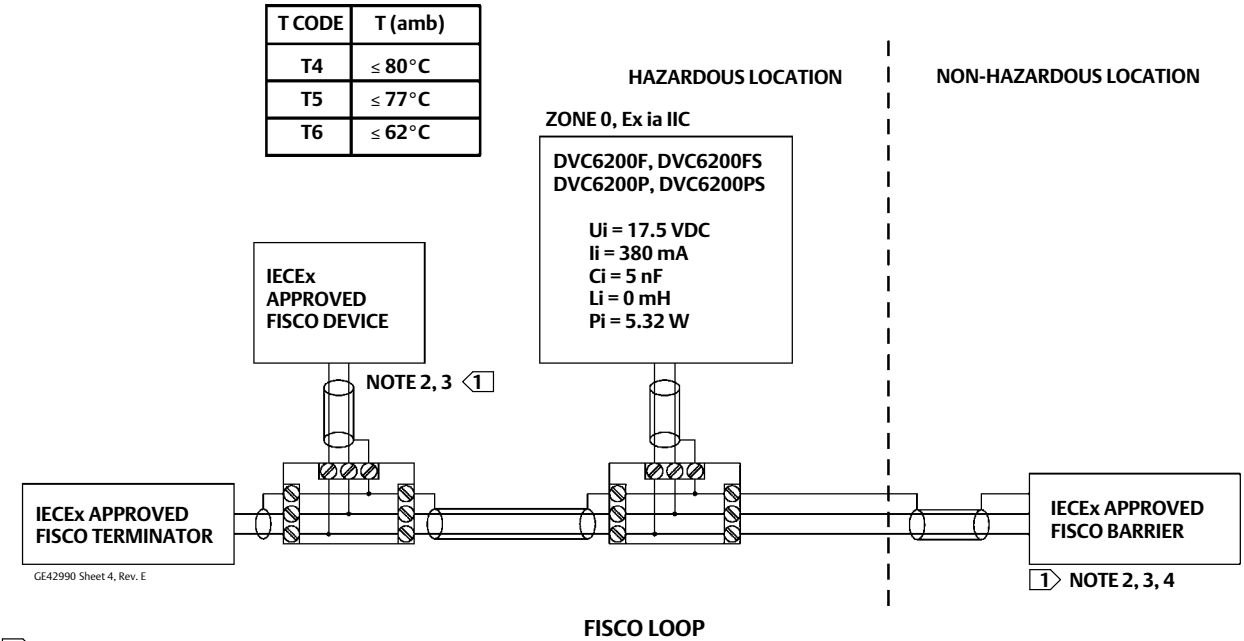

FISCO LOOP

1 SEE NOTES IN FIGURE 60

Figure 59. IECEx Loop Schematics FIELDVUE DVC6205f, DVC6205p, and DVC6215

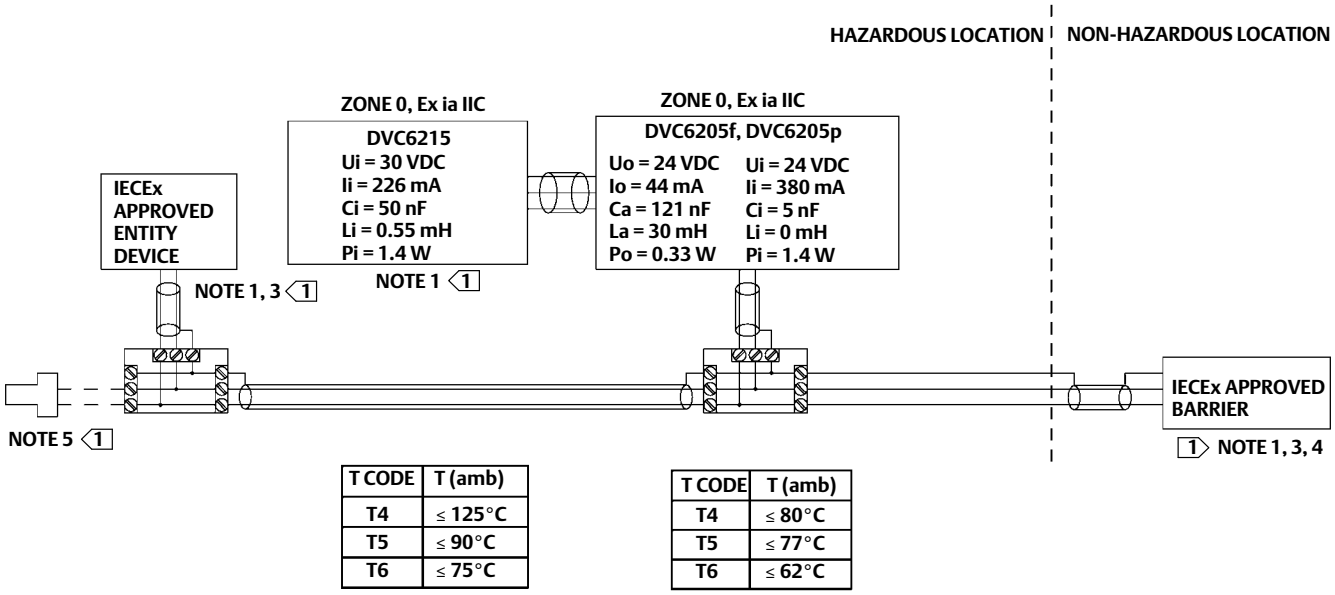

GE42990 Sheet 9, Rev. C

ENTITY FIELDBUS LOOP

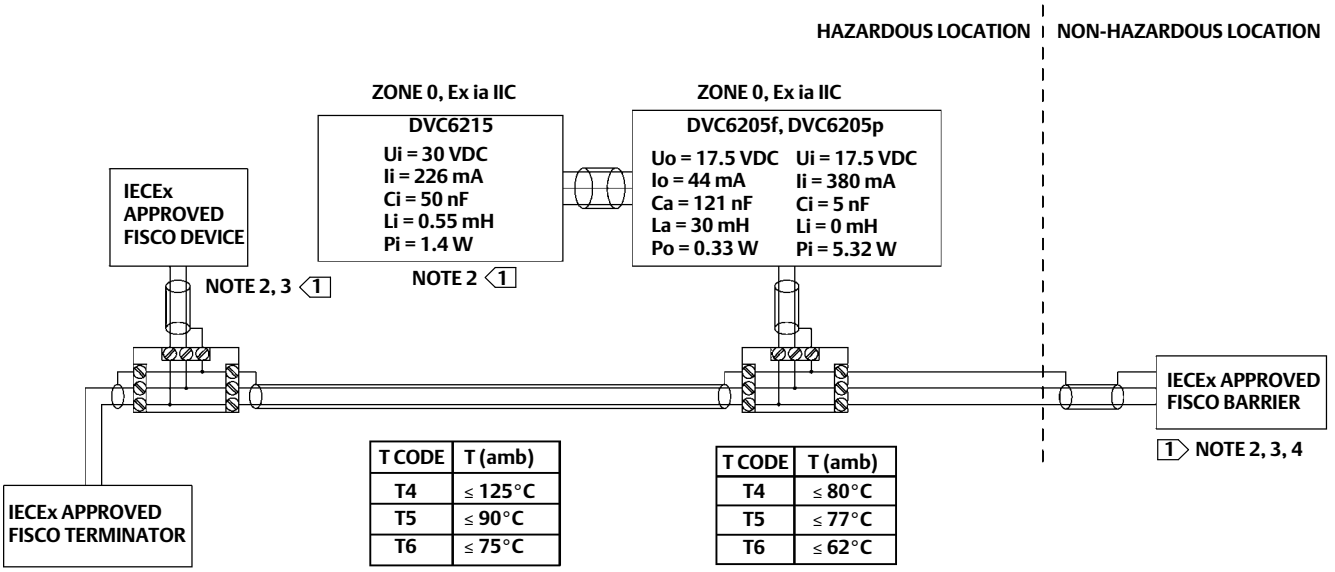

GE42990 Sheet 10, Rev. C

1 SEE NOTES IN FIGURE 60

FISCO LOOP

Figure 60. Notes for IECEx Loop Schematics

1 THE ENTITY CONCEPT ALLOWS INTERCONNECTION OF INTRINSICALLY SAFE APPARATUS TO ASSOCIATED APPARATUS NOT SPECIFICALLY EXAMINED IN SUCH COMBINATION. THE CRITERIA FOR INTERCONNECTION IS THAT THE VOLTAGE (Vmax OR Ui), THE CURRENT (Imax OR Ii), AND THE POWER (Pmax or Pi) OF THE INTRINSICALLY SAFE APPARATUS MUST BE EQUAL TO OR GREATER THAN THE VOLTAGE (Voc OR Uo), AND THE CURRENT (Isc OR Io), AND THE POWER (Po) DEFINED BY THE ASSOCIATED APPARATUS. IN ADDITION, THE SUM OF THE MAX UNPROTECTED CAPACITANCE (Ci) AND MAX UNPROTECTED INDUCTANCE (Li), INCLUDING THE INTERCONNECTING CABLING CAPACITANCE (Ccable) AND CABLING INDUCTANCE (Lcable) MUST BE LESS THAN THE ALLOWABLE CAPACITANCE (Ca) AND INDUCTANCE (La) DEFINED BY THE ASSOCIATED APPARATUS. IF THE ABOVE CRITERIA IS MET, THEN THE COMBINATION MAY BE CONNECTED.

Vmax or Ui ≥ Voc or Uo Imax or Ii ≥ Isc or Io Pmax or Pi ≥ Po Ci + Ccable ≤ Ca Li + Lcable ≤ La

2 THE FISCO CONCEPT ALLOWS INTERCONNECTION OF INTRINSICALLY SAFE APPARATUS TO ASSOCIATED APPARATUS NOT SPECIFICALLY EXAMINED IN SUCH COMBINATION. THE CRITERIA FOR THE INTERCONNECTION IS THAT THE VOLTAGE (Vmax OR Ui), CURRENT (Imax OR Ii), AND POWER (Pmax or Pi), WHICH AN INTRINSICALLY SAFE APPARATUS CAN RECEIVE AND REMAIN INTRINSICALLY SAFE, CONSIDERING FAULTS, MUST BE EQUAL TO OR GREATER THAN THE VOLTAGE (Voc OR Uo), CURRENT (Isc OR Io), AND POWER (Po) LEVELS WHICH CAN BE DELIVERED BY THE ASSOCIATED APPARATUS, CONSIDERING FAULTS AND APPLICABLE FACTORS. IN ADDITION THE MAXIMUM UNPROTECTED CAPACITANCE (Ci) AND INDUCTANCE (Li) OF EACH APPARATUS (OTHER THAN THE TERMINATION) CONNECTED TO THE FIELDBUS MUST BE LESS THAN OR EQUAL TO 5 nF AND 10 uH RESPECTIVELY.

IN EACH SEGMENT ONLY ONE ACTIVE DEVICE, NORMALLY THE ASSOCIATED APPARATUS, IS ALLOWED TO PROVIDE THE NECESSARY ENERGY FOR THE FIELDBUS SYSTEM. THE VOLTAGE (Uo OR Voc OR Vt) OF THE ASSOCIATED APPARATUS HAS TO BE LIMITED TO THE RANGE OF 9 V TO 17.5 VDC. ALL OTHER EQUIPMENT CONNECTED TO THE BUS CABLE HAS TO BE PASSIVE, MEANING THAT THEY ARE NOT ALLOWED TO PROVIDE ENERGY TO THE SYSTEM, EXCEPT FOR A LEAKAGE CURRENT OF 50 uA FOR EACH CONNECTED DEVICE. SEPARATELY POWERED EQUIPMENT NEEDS A GALVANIC ISOLATION TO ASSURE THAT THE INTRINSICALLY SAFE FIELDBUS CIRCUIT REMAINS PASSIVE.

THE CABLE USED TO CONNECT THE DEVICES NEEDS TO HAVE THE PARAMETERS IN THE FOLLOWING RANGE:

LOOP RESISTANCE R': 15 TO 150 ohms/km
INDUCTANCE PER UNIT LENGTH L: 0.4 TO 1 mH/km
CAPACITANCE PER UNIT LENGTH C': 80 TO 200 nF/km
C' = C' LINE/LINE + 0.5' LINE/SCREEN, IF BOTH LINES ARE FLOATING OR
C' = C' LINE/LINE + C' LINE/SCREEN, IF THE SCREEN IS CONNECTED TO ONE LINE.
LENGTH OF SPLICE: < 1 m (T-BOX MUST ONLY CONTAIN TERMINAL CONNECTIONS WITH NO ENERGY STORAGE CAPABILITY)
LENGTH OF SPUR CABLE: < 30 M
LENGTH OF TRUNK CABLE: < 1 km

AT EACH END OF THE TRUNK CABLE AN APPROVED INFALLIBLE TERMINATION WITH THE FOLLOWING PARAMETERS IS SUITABLE:
R = 90 TO 100 ohms AND C = 0 TO 2.2 uF
NOTE, A BUILT-IN TERMINATOR IS INCLUDED IN THE FIELD SIDE AND A SELECTABLE TERMINATOR IS AVAILABLE ON THE HOST SIDE.

THE NUMBER OF PASSIVE DEVICES CONNECTED TO THE BUS SEGMENT IS NOT LIMITED IN THE FISCO CONCEPT FOR INTRINSICALLY SAFE REASONS. IF THE ABOVE RULES ARE RESPECTED, UP TO A TOTAL LENGTH OF 1000 m (SUM OF THE LENGTH OF THE TRUNK CABLE AND ALL SPUR CABLES), THE INDUCTANCE AND CAPACITANCE OF THE CABLE WILL NOT IMPAIR THE INTRINSIC SAFETY OF THE INSTALLATION.

3 INSTALLATION MUST BE IN ACCORDANCE WITH THE NATIONAL WIRING PRACTICES OF THE COUNTRY IN USE.

4 LOOPS MUST BE CONNECTED ACCORDING TO THE BARRIER MANUFACTURER'S INSTRUCTIONS.

5 IF HAND-HELD COMMUNICATOR OR MULTIPLEXER IS USED, IT MUST BE IECEx APPROVED WITH ENTITY PARAMETERS AND INSTALLED PER THE MANUFACTURER'S CONTROL DRAWINGS.

GE42990 Sheet 8, Rev. D

Scan the appropriate QR code for digital valve controller field support

DVC6200 SIS

DVC6200p

DVC6200

DVC6200f

Neither Emerson, Emerson Process Management, nor any of their affiliated entities assumes responsibility for the selection, use or maintenance of any product. Responsibility for proper selection, use, and maintenance of any product remains solely with the purchaser and end user.

Fisher, FIELDVUE, ValveLink, and THUM are marks owned by one of the companies in the Emerson Process Management business unit of Emerson Electric Co. Emerson Process Management, Emerson, and the Emerson logo are trademarks and service marks of Emerson Electric Co. HART and the HART logo are marks owned by the HART Communication Foundation. FOUNDATION fieldbus and the Fieldbus logo are marks owned by the Fieldbus Foundation. The PROFIBUS logo is a mark owned by PROFIBUS Nutzerorganisation e.V. All other marks are the property of their respective owners.

The contents of this publication are presented for informational purposes only, and while every effort has been made to ensure their accuracy, they are not to be construed as warranties or guarantees, express or implied, regarding the products or services described herein or their use or applicability. All sales are governed by our terms and conditions, which are available upon request. We reserve the right to modify or improve the designs or specifications of such products at any time without notice.

Emerson Process Management
Marshalltown, Iowa 50158 USA
Sorocaba, 18087 Brazil
Chatham, Kent ME4 4QZ UK
Dubai, United Arab Emirates
Singapore 128461 Singapore

www.Fisher.com

EMERSON
Process Management

© 2012, 2014 Fisher Controls International LLC. All rights reserved.

Fisher® FIELDVUE™ DVC6200 Digital Valve Controller

The FIELDVUE DVC6200 digital valve controller is a HART® communicating instrument that converts a two-wire 4-20 mA control signal into a pneumatic output to an actuator. It can easily be retrofitted in place of existing analog positioners on most Fisher and non-Fisher pneumatic actuators.

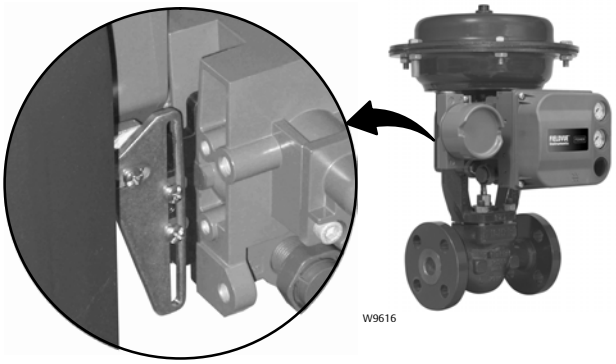

LINKAGE-LESS FEEDBACK SYSTEM

Features

Reliability

- Linkage-Less Non-Contact Position Feedback— The high performance, linkage-less feedback system eliminates physical contact between the valve stem and the DVC6200. There are no wearing parts so cycle life is maximized.
- Built to Survive—The field proven DVC6200 instrument has fully encapsulated electronics that resist the effects of vibration, temperature, and corrosive atmospheres. A weather-tight wiring terminal box isolates field wiring connections from other areas of the instrument.

Performance

- Accurate and Responsive— The two-stage positioner design provides quick response to large step changes and precise control for small setpoint changes.

Ease of Use

- Enhanced Safety— The DVC6200 is a HART communicating device, so information can be accessed anywhere along the loop. This flexibility can reduce exposure to hazardous environments and make it easier to evaluate valves in hard to reach locations.
- Faster Commissioning— HART communications allows you to quickly commission loops with a variety of tools, either locally at the valve assembly or remotely.
- Easy Maintenance— The DVC6200 digital valve controller is modular in design. Critical working components can be replaced without removing field wiring or pneumatic tubing.

Value

- Hardware Savings— When installed in an integrated control system, significant hardware and installation cost savings can be achieved. Valve accessories such as limit switches and position transmitters can be eliminated because this information is available via the HART communication protocol.
- Increased Uptime— The self-diagnostic capability of the DVC6200 digital valve controller provides valve performance and health evaluation without shutting down the process or pulling the valve assembly from the line.
- Improved Maintenance Decisions— Digital communication provides easy access to the condition of the valve. Sound process and asset management decisions can be made by analysis of valve information through Fisher ValveLink™ software.

Figure 1. Alerts Status Screen

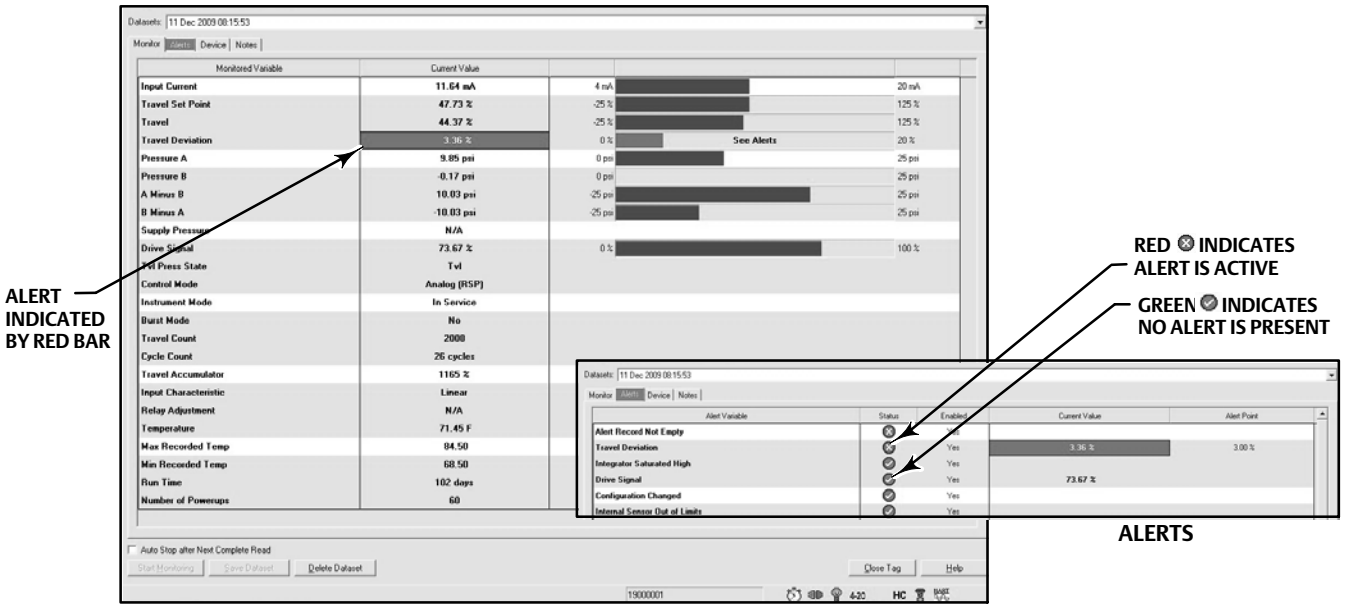

Valve Diagnostics

The DVC6200 digital valve controller provides a comprehensive library of valve diagnostic alerts, as shown in figure 1. These alerts are easily accessed with the 475 Field Communicator. When installed as part of a HART communicating system, the DVC6200 delivers prompt notification of current or potential equipment issues directly to the asset management system.

Alerts assist in identification and notification of the following situations:

- Valve travel deviation due to excessive valve friction or galling
- High cycle due to dither or improper tuning
- Total travel movement accumulation beyond a specified point resulting in packing wear
- Valve travel above or below a specified point
- Various instrument mechanical and electrical issues

These alerts are stored in memory on board the DVC6200.

For additional information on FIELDVUE diagnostics and ValveLink software refer to Fisher bulletin 62.1:ValveLink (D102227X012).

Specifications

Available Mounting

- Integral mounting to the Fisher GX Control Valve and Actuator System
- Integral mounting to Fisher rotary actuators
- Sliding-stem linear applications
- Quarter-turn rotary applications

DVC6200 digital valve controllers can also be mounted on other actuators that comply with IEC 60534-6-1, IEC 60534-6-2, VDI/VDE 3845 and NAMUR mounting standards.

Communication Protocol

■ HART 5 or ■ HART 7(1)

Input Signal

Point-to-Point

Analog Input Signal: 4-20 mA DC, nominal; split ranging available

Minimum Voltage Available at Instrument Terminals must be 10.5 VDC for analog control, 11 VDC for HART communication(2)
Minimum Control Current: 4.0 mA
Minimum Current w/o Microprocessor Restart: 3.5 mA
Maximum Voltage: 30 VDC
Overcurrent protected
Reverse Polarity protected

Multi-drop

Instrument Power: 11 to 30 VDC at 10 mA
Reverse Polarity protected

Supply Pressure(3)

Minimum Recommended: 0.3 bar (5 psig) higher than maximum actuator requirements

Maximum: 10.0 bar (145 psig) or maximum pressure rating of the actuator, whichever is lower

Supply Medium

Air or Natural Gas

Air: Supply pressure must be clean, dry air that meets the requirements of ISA Standard 7.0.01.

Natural Gas: Natural gas must be clean, dry, oil-free, and noncorrosive. H_2S content should not exceed 20 ppm.

A maximum 40 micrometer particle size in the air system is acceptable. Further filtration down to 5 micrometer particle size is recommended.

Output Signal

Pneumatic signal, up to full supply pressure
Minimum Span: 0.4 bar (6 psig)
Maximum Span: 9.5 bar (140 psig)
Action: ■ Double, ■ Single Direct or ■ Reverse

Steady-State Air Consumption(4)(5)

At 1.4 bar (20 psig) supply pressure: Less than 0.38 normal m^3/hr (14 scfh)
At 5.5 bar (80 psig) supply pressure: Less than 1.3 normal m^3/hr (49 scfh)

Maximum Output Capacity(4)(5)

At 1.4 bar (20 psig) supply pressure:
10.0 normal m^3/hr (375 scfh)
At 5.5 bar (80 psig) supply pressure:
29.5 normal m^3/hr (1100 scfh)

Operating Ambient Temperature Limits(3)(6)

-40 to 85°C (-40 to 185°F)
-52 to 85°C (-62 to 185°F) for instruments utilizing the Extreme Temperature option (fluorosilicone elastomers)

Independent Linearity(7)

Typical Value: ±0.50% of output span

Electromagnetic Compatibility

Meets EN 61326-1 (First Edition)
Immunity—Industrial locations per Table 2 of the EN 61326-1 standard.
Emissions—Class A
ISM equipment rating: Group 1, Class A

Vibration Testing Method

Tested per ANSI/ISA-S75.13.01 Section 5.3.5.

Input Impedance

An equivalent impedance of 550 ohms may be used. This value corresponds to 11V @ 20 mA.

Humidity Testing Method

Tested per IEC 61514-2

Electrical Classification

Hazardous Area Approvals
CSA— Intrinsically Safe, Explosion-proof, Division 2, Dust Ignition-proof
FM— Intrinsically Safe, Explosion-proof, Non-Incendive, Dust Ignition-proof
ATEX— Intrinsically Safe, Flameproof, Type n
IECEx— Intrinsically Safe, Flameproof, Type n

-continued-

Specifications (continued)

Electrical Housing

CSA— Type 4X, IP66 ATEX— IP66
FM— Type 4X, IP66 IECEx— IP66

Other Classifications/Certifications

Natural Gas Certified, Single Seal Device— CSA, FM, ATEX, and IECEx

FSETAN—Federal Service of Technological, Ecological and Nuclear Inspectorate (Russia)

GOST-R— Russian GOST-R

INMETRO— National Institute of Metrology, Quality and Technology (Brazil)

KGS— Korea Gas Safety Corporation (South Korea)

NEPSI— National Supervision and Inspection Centre for Explosion Protection and Safety of Instrumentation (China)

PESO CCOE— Petroleum and Explosives Safety Organisation - Chief Controller of Explosives (India)

TIIS— Technology Institution of Industrial Safety (Japan)

Not all certifications apply to all constructions. Contact your Emerson Process Management sales office for classification/certification specific information.

Connections

Supply Pressure: 1/4 NPT internal and integral pad for mounting 67CFR regulator
Output Pressure: 1/4 NPT internal
Tubing: 3/8-inch recommended
Vent: 3/8 NPT internal
Electrical: 1/2 NPT internal, M20 adapter optional

Actuator Compatibility

Stem Travel (Sliding-Stem Linear)
Minimum: 6.35 mm (0.25 inch)
Maximum: 606 mm (23-7/8 inches)

Shaft Rotation (Quarter-Turn Rotary)
Minimum: 45°
Maximum: 90°

Weight

Aluminum: 3.5 kg (7.7 lbs)
Stainless Steel: 8.6 kg (19 lbs)

Construction Materials

Housing, module base and terminal box:
A03600 low copper aluminum alloy (standard), Stainless Steel (optional)
Cover: Thermoplastic polyester
Elastomers: Nitrile (standard)

Options

■ Supply and output pressure gauges or ■ Tire valves ■ Integral mounted filter regulator ■ Low-Bleed Relay ■ Extreme Temperature ■ Natural Gas Certified, Single Seal Device ■ Remote Mount(8) ■ Stainless Steel ■ Integral 4-20mA Position Transmitter(1)(9) ■ Integral Limit Switch(1)(10)

Additional Information

For additional information go to www.FIELDVUE.com or contact your Emerson Process Management sales office.

NOTE: Specialized instrument terms are defined in ANSI/ISA Standard 51.1 - Process Instrument Terminology.
1. Only available with DVC6200 HW2.
2. Values listed are applicable for DVC6200 HW 1. For HW 2: Minimum Voltage Available at Instrument Terminals must be 9.5 VDC for analog control, 10 VDC for HART communication.
3. The pressure/temperature limits in this document and any other applicable code or standard should not be exceeded.
4. Normal m^3/hour - Normal cubic meters per hour at 0°C and 1.01325 bar, absolute. Scfh - Standard cubic feet per hour at 60°F and 14.7 psia.
5. Values at 1.4 bar (20 psig) based on a single-acting direct relay; values at 5.5 bar (80 psig) based on double-acting relay.
6. Temperature limits vary based on hazardous area approval.
7. Not applicable for travels less than 19 mm (0.75 inch) or for shaft rotation less than 60 degrees. Also not applicable for digital valve controllers in long-stroke applications.
8. 4-conductor shielded cable, 18 to 22 AWG minimum wire size, in rigid or flexible metal conduit, is required for connection between base unit and feedback unit.
9. 4-20 mA output, isolated; *Supply Voltage:* 8-30 VDC; *Fault Indication:* offrange high or low; *Reference Accuracy:* 1% of travel span.
10. One isolated switch, configurable throughout the calibrated travel range or actuated from a device alert; *Off State:* 0 mA (nominal); *On State:* up to 1 A; *Supply Voltage:* 30 VDC maximum; *Reference Accuracy:* 2% of travel span.

Neither Emerson, Emerson Process Management, nor any of their affiliated entities assumes responsibility for the selection, use or maintenance of any product. Responsibility for proper selection, use, and maintenance of any product remains solely with the purchaser and end user.

Fisher, FIELDVUE, and ValveLink are marks owned by one of the companies in the Emerson Process Management business unit of Emerson Electric Co. Emerson Process Management, Emerson, and the Emerson logo are trademarks and service marks of Emerson Electric Co. HART is a mark owned by the HART Communication Foundation. All other marks are the property of their respective owners.

The contents of this publication are presented for informational purposes only, and while every effort has been made to ensure their accuracy, they are not to be construed as warranties or guarantees, express or implied, regarding the products or services described herein or their use or applicability. All sales are governed by our terms and conditions, which are available upon request. We reserve the right to modify or improve the designs or specifications of such products at any time without notice.

Emerson Process Management
Marshalltown, Iowa 50158 USA
Sorocaba, 18087 Brazil
Chatham, Kent ME4 4QZ UK
Dubai, United Arab Emirates
Singapore 128461 Singapore

www.Fisher.com

EMERSON
Process Management

© 2009, 2013 Fisher Controls International LLC. All rights reserved.

CAMERON

MEASUREMENT SYSTEMS

Quick Start Guide

MC-III™ Flow Analyzer



A Quick Reference on
Mounting, Wiring, & Configuring
the MC-III EXP or WP Flow Analyzer

For complete instructions, see
MC-III EXP User Manual, Part No. 9A-50165003
MC-III WP User Manual, Part No. 9A-50165009
in the MC-III software Help menu

Part No. 2296694-01, Rev. 03

Mounting Your MC-III

MC-III EXP

1. Position the MC-III EXP above the flowmeter pickup adapter.
2. Plug the connector of the MC-III EXP cable into the magnetic pickup and hand-tighten the knurled nut on the connector.
3. Mount the MC-III EXP on the flowmeter pickup adapter with the display facing the desired direction, and tighten all sections of the pipe union. Before mounting an ATEX-approved device, see “MC-III EXP (ATEX)” below.

Caution: Do not use Teflon tape on threads of the union, adapter, or pipe plugs.

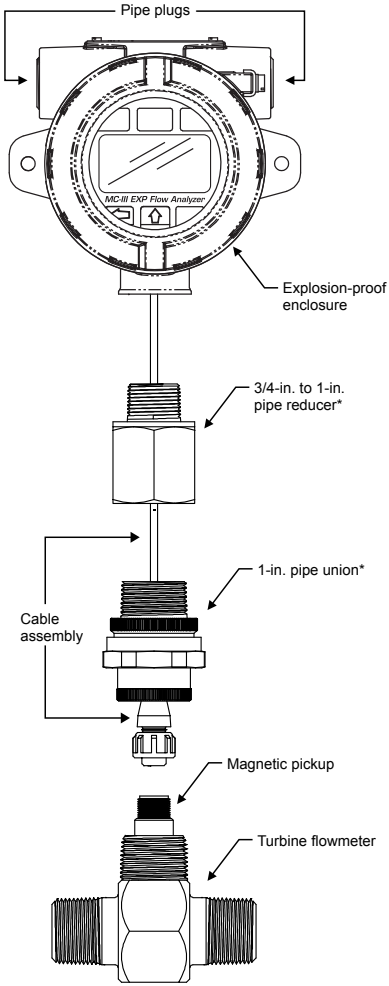

* Pipe reducer and union are used in CSA-approved MC-III devices only.

MC-III EXP (ATEX)

ATEX-approved MC-III EXPs are fitted with a standoff tube adapter when purchased with an ATEX-approved Barton 7000 Series or NuFlo turbine meter.

To avoid damaging the signal cable during installation, make sure the signal cable is disconnected from the MC-III circuit board before mounting the MC-III to a flowmeter.

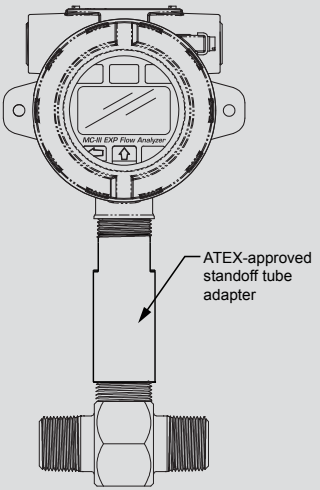

MC-III WP

1. Position the MC-III WP above the flowmeter.
2. Plug the MC-III WP cable connector into the magnetic pickup and hand-tighten the knurled nut on the connector.
3. Screw the MC-III WP mount onto the flowmeter threads surrounding the magnetic pickup.
4. With the display facing the desired direction, tighten the two screws on either side of the mount to prevent horizontal shifting.
5. With the display oriented vertically in the desired direction, tighten the two hex-head bolts on either side of the top section of the mount to prevent vertical shifting.

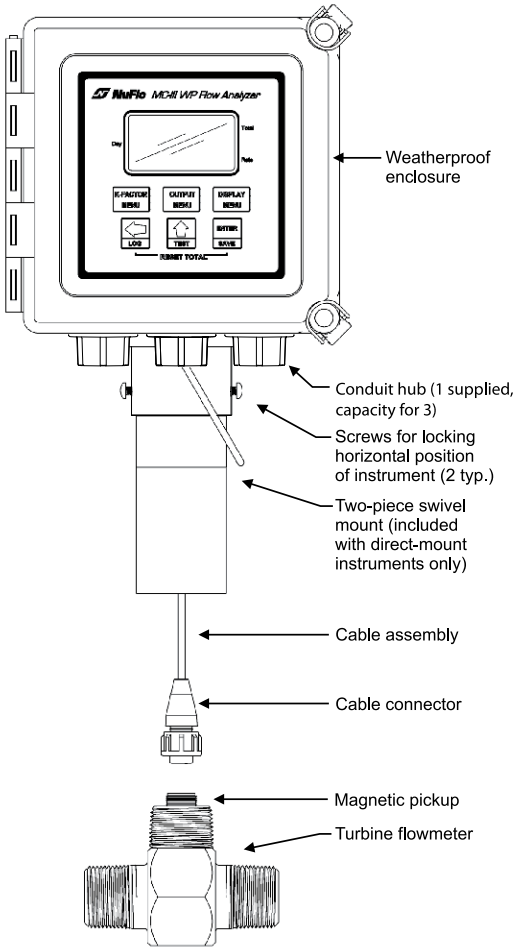

Wiring Your MC-III

CAUTION—All field wiring must conform to the National Electrical Code, NFPA 70, Article 501-4(b) for installations within the United States or the Canadian Electric Code for installations within Canada. Local wiring ordinances may also apply. All field wiring must have a wire range of 22 to 14 AWG and terminal block screws must be tightened to a minimum torque of 5 to 7 in-lb to secure the wiring within the terminal block. Only personnel who are experienced with field wiring should perform these procedures.

MC-III EXP

Field wiring enters the MC-III EXP enclosure through either of two threaded conduit openings in the top of the enclosure. When not in use, the openings are sealed with pipe plugs.

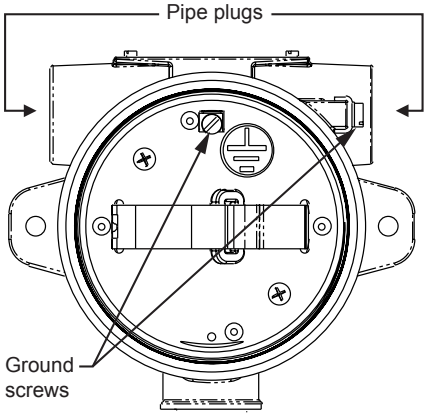

MC-III WP

Field wiring enters the MC-III WP enclosure through conduit hubs in the bottom of the enclosure. One hub is supplied and two additional entrances are plugged but available for use with customer-supplied hubs). The flowmeter cable is routed through a cord connector in the back of the bottom enclosure panel.

For Div. 2 installations, a ground wire must be connected to the internal ground screw inside the enclosure.

For DC-powered installations, route the ground conductor into the enclosure with the incoming power conductors.

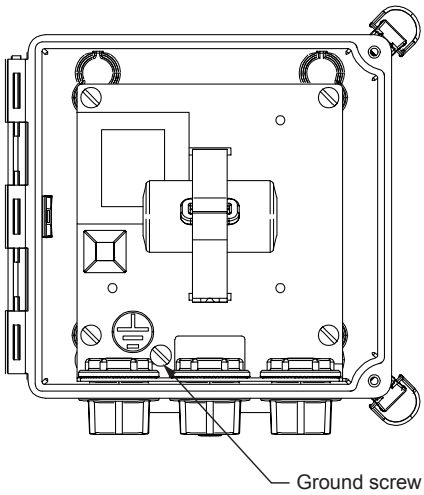

1. If the battery/battery pack is not already connected to the circuit board, attach the battery cable to connector J1.
2. Connect the flowmeter signal cable to terminal block TB1.

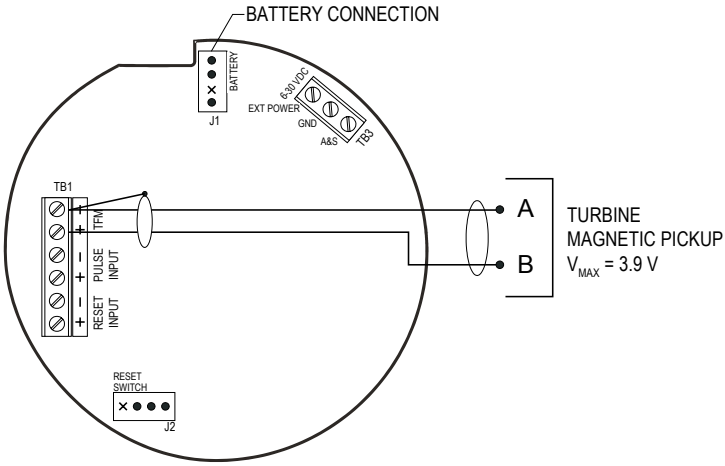

3. If an external power supply is to be used (the battery will provide backup power), wire the power supply to terminal block TB3.

   For MC-III WP Div. 2 installations, connect a protective overcurrent device rated at 0.5A maximum (circuit breaker or fuse) to the positive supply line of the DC power supply in the safe area. A disconnect switch for the power supply must also be installed in the safe area.

   A Zener diode (Part No. 1.5KE33CA) must be installed for CE approval.

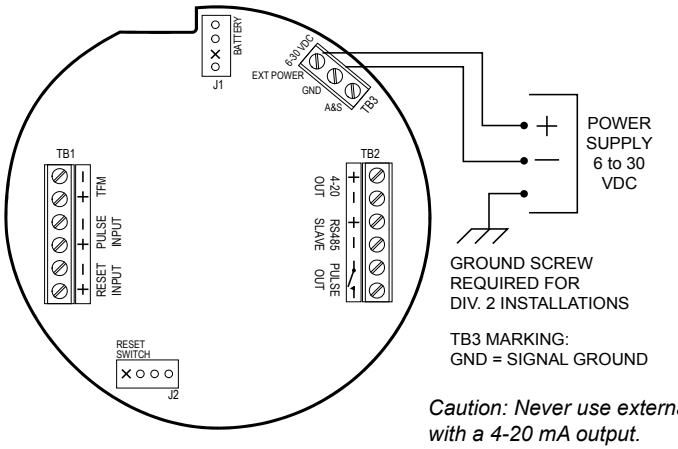

Caution: Never use external power with a 4-20 mA output.

Wiring Your MC-III

4. If a pulse output is to be used, wire the power supply and the pulse readout device to terminal block TB2. The maximum current rating of the pulse output circuit is 60 mA at 50 VDC.

   A Zener diode (Part No. 1.5KE56CA) must be installed for CE approval.

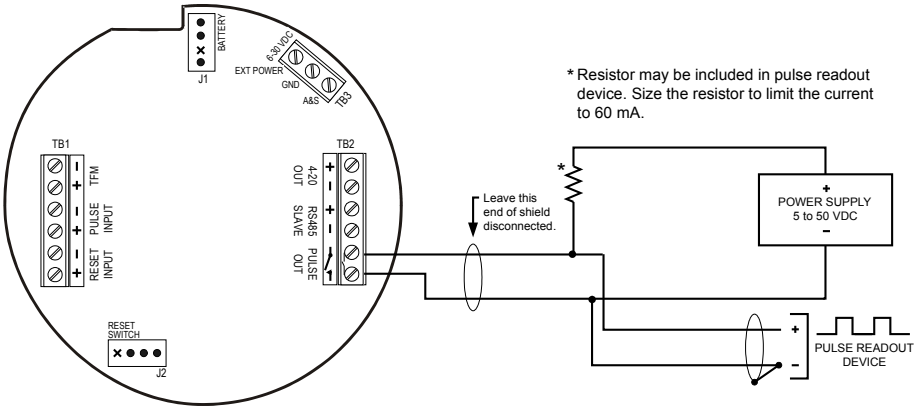

5. If a 4-20 mA rate output is to be used, wire the power supply to terminal block TB2. The power supply voltage required to power the current loop depends on the loop resistance. See an MC-III user manual for details.

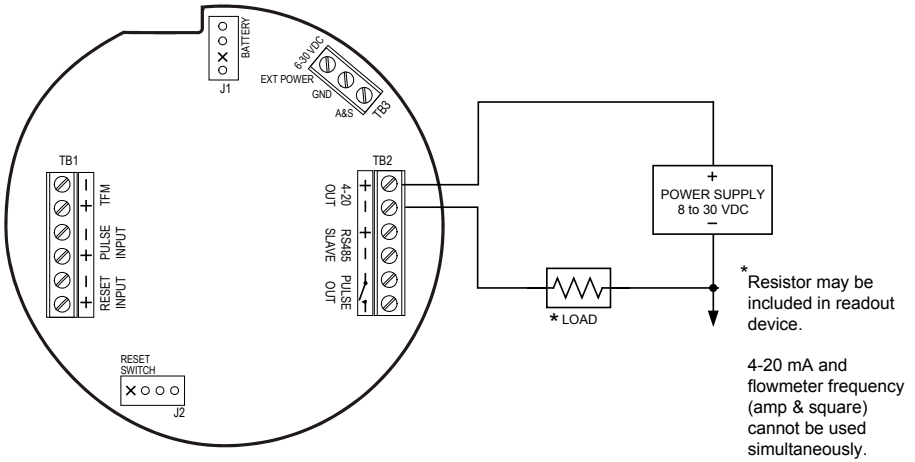

Caution: Never use external power with a 4-20 mA output.

6. If a flowmeter frequency output is to be used to provide flow rate and/ or total information to peripheral equipment, wire the power supply and the frequency readout device to terminal block TB3. The readout device must operate with 50 mA or less.

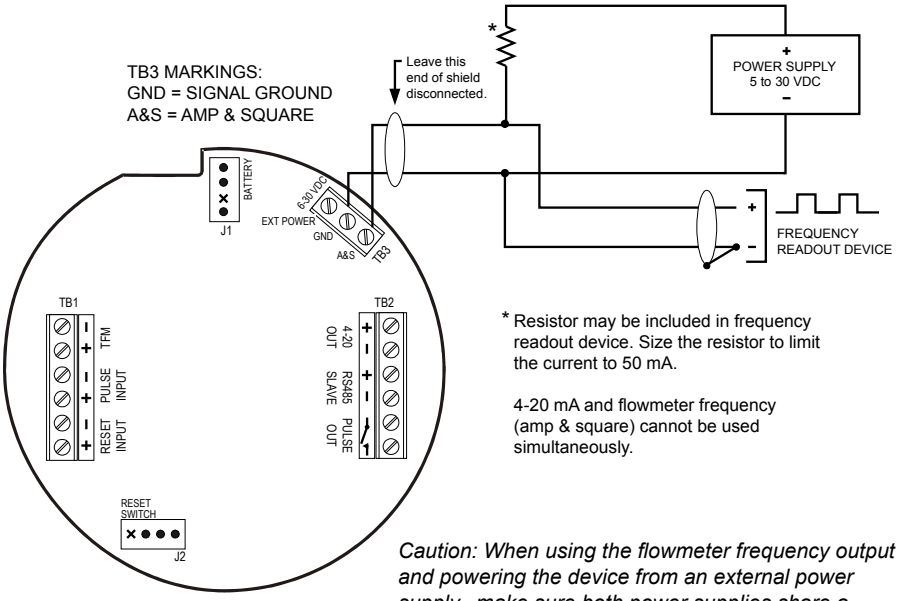

* Resistor may be included in frequency readout device. Size the resistor to limit the current to 50 mA.

4-20 mA and flowmeter frequency (amp & square) cannot be used simultaneously.

Caution: When using the flowmeter frequency output and powering the device from an external power supply, make sure both power supplies share a common negative (-) terminal or are totally isolated from each other.

7. To configure the MC-III with software, connect the MC-III to a computer by wiring a converter cable to the RS-485 terminals of TB2. See page 12 for wiring diagrams.

Configuring with the Keypad

Most routine functions can be configured from the six-button keypad.

This guide provides instructions for entering a calibration factor, and selecting the units for the total and flow rate displays. For instructions on configuring all other parameters, see the MC-III user manuals.

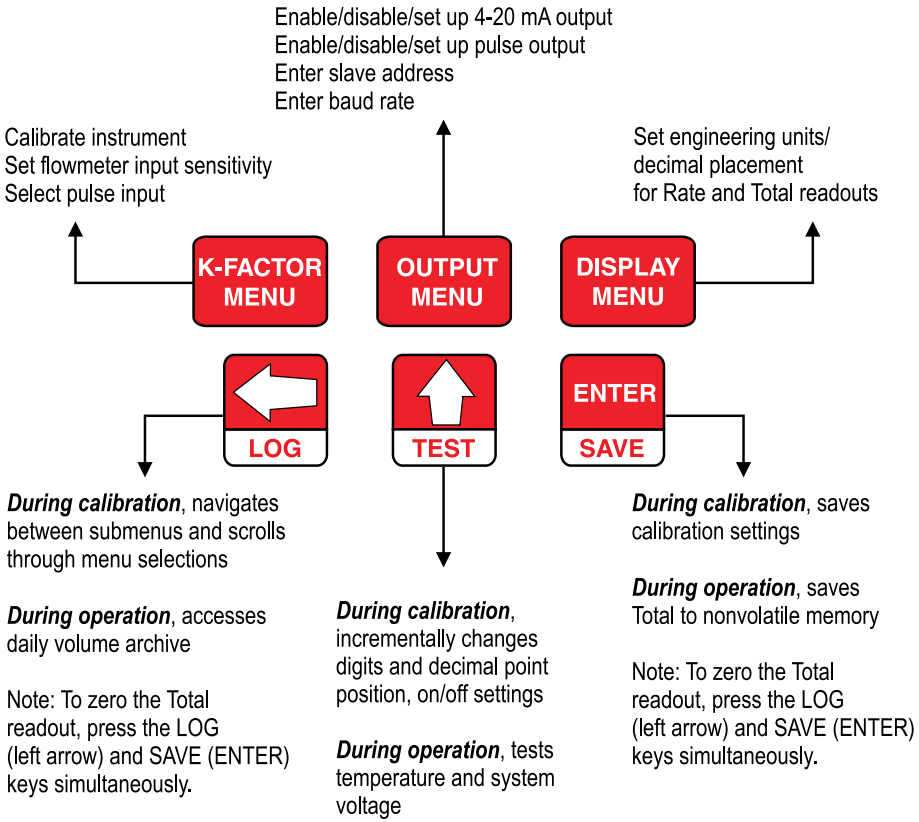

Parameter changes typically require four basic steps:

1. Select a menu (K-FACTOR, OUTPUT, OR DISPLAY).
2. Press UP ARROW to change the parameter or value displayed.
3. Press LEFT ARROW to advance to the next configurable parameter or value.
4. Press ENTER to save the new configuration setting.

Enter a Calibration Factor

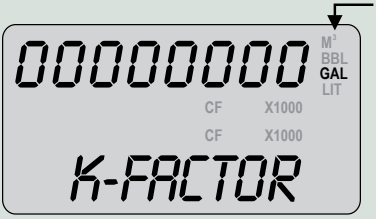

Select a K-Factor Unit.	
Press K-FACTOR MENU.	K-FACTOR MENU
Press UP ARROW until the correct unit is displayed.	TEST
Select a Decimal Point Position.	
Press LEFT ARROW to select the decimal point.	LOG
Press UP ARROW to change the position of the decimal point.	TEST
Press LEFT ARROW to save the decimal point selection and proceed with entering a calibration factor.	LOG
Enter a Calibration Factor.	
Press UP ARROW until the last digit of the calibration factor is displayed.	TEST
Then press LEFT ARROW to select the next digit to the left. Repeat using UP and LEFT arrows to enter remaining digits.	LOG
Press ENTER to advance to the Input Sensitivity menu.	ENTER SAVE
Enter an Input Sensitivity Setting.	
Press UP ARROW to select low, medium, or high (for a turbine meter input signal) or “pulse input” (for a preamplifier input signal).	TEST
Press ENTER to save your selections.	ENTER SAVE

Configuring with the Keypad

Select a Unit of Measure for Volume

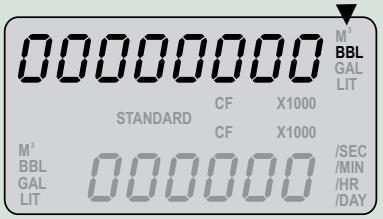

Select a Volume Unit.	
Press DISPLAY MENU.	DISPLAY MENU
Press UP ARROW until the correct unit is displayed. Note—If a calculated divisor was entered, select user-defined (no units visible).	TEST
To read the volume in terms of thousands of units (ex. 1.0 = 1,000 bbl), continue pressing UP ARROW until both the unit of choice and the X1000 option are displayed.	TEST
Select a Decimal Point Position.	
Press LEFT ARROW until the decimal point in the Total display begins blinking.	LOG
Press UP ARROW to change the position of the decimal point.	TEST
Press ENTER to save your selections.	ENTER SAVE

Select a Unit of Measure for Rate

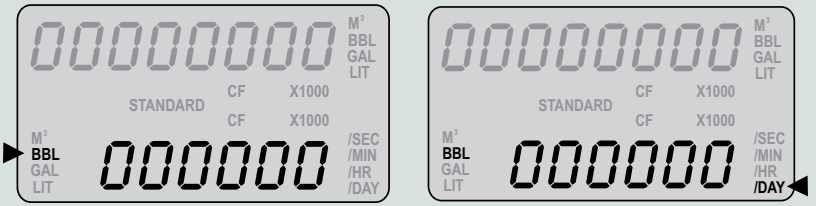

Select the Volume Portion of the Flow Rate Unit.	
Press DISPLAY MENU.	DISPLAY MENU
Press LEFT ARROW until a volume unit of measure is displayed in the rate display portion of the LCD window. These units are located to the left or just above the Rate display.	LOG
Press UP ARROW until the desired unit of measure is displayed. Note—If a calculated divisor was entered, select user-defined (no units visible).	TEST
Select the Time Portion of the Flow Rate Unit.	
Press LEFT ARROW to select the time portion of the Rate unit of measure.	LOG
Press UP ARROW until the desired unit of measure is displayed.	TEST
Select a Decimal Point Position.	
Press LEFT ARROW until the decimal point in the Rate display begins blinking.	LOG
Press UP ARROW to change the position of the decimal point.	TEST
Press ENTER to save your selections.	ENTER SAVE

Connecting to the MC-III

Step 1: Install the MC-III Software

Follow the instructions on the cover of the CD packet to load the software. An MC-III icon will appear on the computer desktop when installation is complete.

Step 2: Connect the Computer to the MC-III

Note—An RS-485 converter is required to connect a computer to the MC-III flow analyzer. The instructions below are for an RS-485-to USB converter (Part No. 2296650-01). An RS-485-to-RS-232 9-pin converter (Part No. 9A-101283116) is also available.

1. Remove or open the cover of the MC-III enclosure to access the circuit board.
2. Verify that the battery is connected to the J1 connector (page 5). If using an external power supply, verify that it is wired properly (page 5).
3. Connect the RS-485 to USB converter cable to the RS-485 terminals on TB2 of the MC-III circuit board as shown.
4. Use a universal A/B USB cable to connect your computer to the converter.

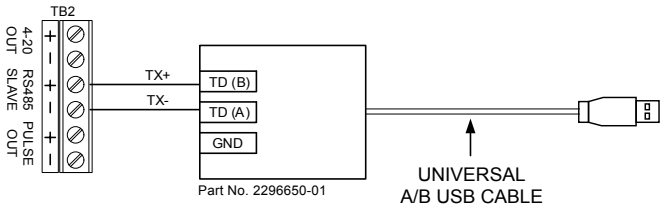

Communication Adapters (RS-485 or USB)

If an optional communication adapter is installed, the MC-III EXP may be connected to a computer without opening the enclosure or installing additional field wiring. Communication adapters are available for use with RS-232 or USB computer ports. If using a USB port, a user-supplied universal serial bus USB A/B cable is required. See the MC-III EXP User Manual for details.

Important—The RS-485 to RS-232 adapter is approved for use with CSA-certified and ATEX-certified MC-III EXP analyzers. The RS-485 to USB adapter is approved only for use with a CSA-certified MC-III EXP analyzer.

Step 3: Run the Program

1. Double-click the MC-III icon on the desktop or select Start-Programs-NuFlo-MC-III-MC-III to launch the software.

   A Welcome screen will appear, followed by a Device Autorun Options screen.

2. Select *Launch the Configuration Wizard* and follow the instructions on the screen.

   For access to all configurable parameters, select *Go to MC-III Main* (see the MC-III user manuals for instructions).

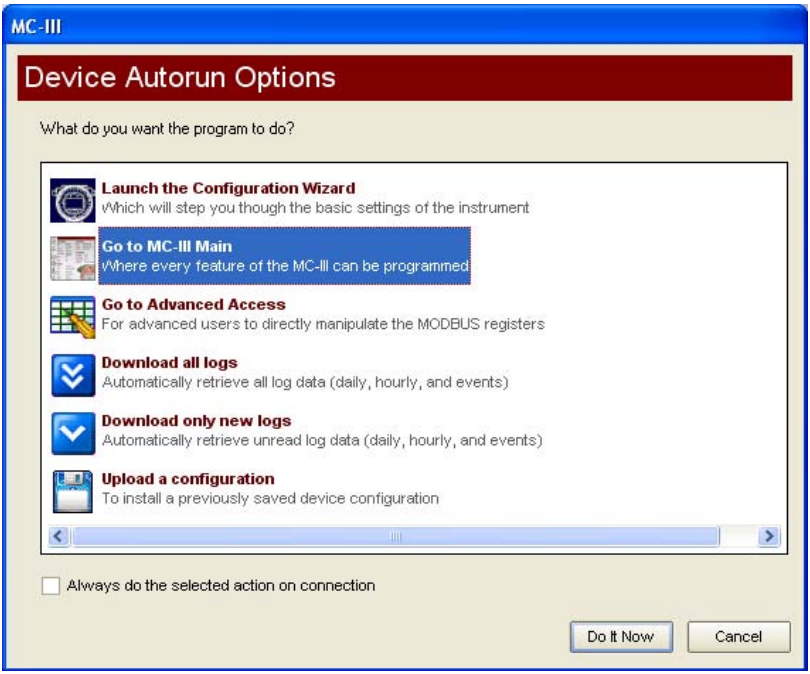

To automate a function to run each time the software connects with the instrument, click on the function on the Device Autorun Options screen and check the *Always do...* checkbox at the bottom of the screen.

Configuring with Software

Gas Volume Correction

Gas turbine meters measure gas in actual cubic feet (ACF). To measure gas in terms of standard cubic feet (SCF), flowing gas pressures and temperatures must be referenced back to standard conditions, based on fixed (average) parameters. *These parameters are accessible only through MC-III interface software.*

To configure the instrument to measure gas flow in standard cubic feet, perform the following steps:

1. Select *Go to MC-III Main* from the Device Autorun Options screen.
2. Click the *K-Factor Entry* icon in the scroll bar at left.
3. In the Gas Volume Correction section of the K-Factor Entry screen, check the *Enable volume correction* checkbox (see screen on page 15). The STANDARD annunciator will appear on the LCD.
4. Adjust atmospheric pressure, if desired.
5. Enter the base pressure and unit and the base temperature and unit.
6. Enter the working pressure, working temperature, and corresponding units.
7. Enter a known compressibility factor, or press *Calculate compressibility from gas comp*. to enter the gas composition. Click *Calculate*.
8. Press *Apply* or *OK* to save the new compensation settings.



Multipoint Linearization

The MC-III can be calibrated with up to 12 calibration points *using MC-III interface software*. (Only single-point calibration is supported through the Configuration Wizard.)

To configure the instrument with these parameters, perform the following steps:

1. Select *Go to MC-III Main* from the Device Autorun Options screen.
2. Click the K-Factor Entry icon in the scroll bar at left (see screen on page 14).
3. Select the factor units.
4. Select the *multipoint* checkbox.
5. Enter the number of calibration points desired using the “plus” and “minus” buttons (up to 12 points maximum).
6. Click on each activated calibration point field, and enter the appropriate frequency (Hz) and calibration factor.
7. Repeat for all calibration points.
8. Press *Apply* or *OK* to save the new calibration settings.

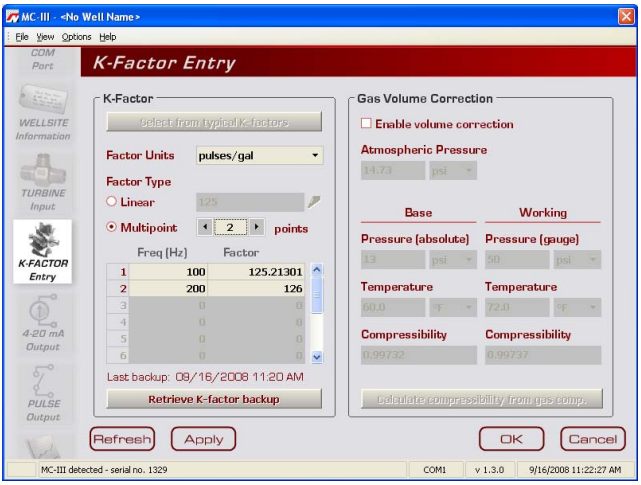

MEASUREMENT SYSTEMS

HOUSTON HEAD OFFICE	**281.582.9500**
NORTH AMERICA	**1.800.654.3760** ms-us@c-a-m.com
ASIA PACIFIC	**+603.5569.0501** ms-kl@c-a-m.com
EUROPE, MIDDLE EAST & AFRICA	**+44.1243.826741** ms-uk@c-a-m.com

USA • CANADA • UK • CHINA • UAE • ALGERIA • MALAYSIA • INDIA • RUSSIA

www.c-a-m.com/flo

CAMERON

Copyright 2013 Cameron International Corporation

NUFLO™

MC-III™ EXP Flow Analyzer

User Manual



Manual No. 9A-50165003, Rev. 04

Important Safety Information

Symbols and Terms Used in this Manual

WARNING: This symbol identifies information about practices or circumstances that can lead to personal injury or death, property damage, or economic loss.

CAUTION: Indicates actions or procedures which if not performed correctly may lead to personal injury or incorrect function of the instrument or connected equipment.

Important: Indicates actions or procedures which may affect instrument operation or may lead to an instrument response which is not planned.

Symbols Marked on Equipment



Attention! Refer to manual



Protective (earth) ground

Technical Support Contact Information

Cameron
Measurement Systems Division
14450 John F. Kennedy Blvd.
Houston, TX 77032
Phone: 1-800-654-3760; 281-582-9500
Fax: 281-582-9599

NuFlo and MC-III are trademarks of Cameron.
Modbus is a registered trademark of the Modbus Organization, Inc.
Windows is a registered trademark of Microsoft Corporation.
Acrobat Reader is a registered trademark of Adobe Systems Incorporated.

© 2013 Cameron International Corporation (“Cameron”). All information contained in this publication is confidential and proprietary property of Cameron. Any reproduction or use of these instructions, drawings, or photographs without the express written permission of an officer of Cameron is forbidden.

All Rights Reserved.
Printed in the United States of America.

Manual No. 9A-50165003, Rev. 04
August 2013

Contents

Section 1—Introduction 1
Operation 1
Product Identification 2
Key Product Features 5
LCD Display 5
Keypad 6
Interface Software 6
Power Supply—CSA-Approved Units 7
Power Supply—ATEX-Approved Units 7
Multipoint Linearization 8
Gas Volume Correction 8
Input Options 8
Output Options 8
Flow Log Archival 8
Event Log Archival 8
Password-Protected Security 8
Optional Features 9
Explosion-Proof Reset/Control Switch 9
RS-485 Communications Adapter 9
USB Communications Adapter (CSA-Approved Units Only) 9
RS-485 IS Barrier (CSA-Approved Units Only) 10
Commonly Used Functions 10
Reading Totals 10
Saving Totals to Memory 10
Resetting the Total 10
Viewing Daily and Hourly Logs 11
Saving and Uploading Configuration Files 11
Exporting Log Data 11
Saving Log Data in a Report 11

Section 2—Installation 13
Hazardous Area Installations (ATEX) 13
Conditions for Safe Use (ATEX) 14
Mounting Options (ATEX) 14
Hazardous Area Installations (CSA) 16
Conditions for Safe Use (CSA) 16
Mounting Options (CSA) 17
Installing the MC-III EXP 19
Field Wiring 20
Internal Power Supply 21
External Power Supply 21
Turbine Flowmeter (TFM) Input 22
Pulse Input 22
Remote Reset Input 23
Pulse Output 24
Analog (4-20 mA) Rate Output 25
Flowmeter Frequency Output 26
RS-485 Output 27

Section 3—Configuration and Operation via Keypad 29
Entering a Calibration Factor 30
Entering a Calculated Divisor 31
Setting Input Type and Sensitivity 32
Configuring the Total Display 33
Configuring the Rate Display 34
Configuring the 4-20 mA Rate Output 35
Configuring the Pulse Output 37
Entering the Slave Address 38
Entering the Baud Rate 38

Section 4—Configuration and Operation via Software 39
Installing the Software 39
User Documentation 39
Connecting the MC-III to a Computer 40
Running the Software 40
Automating Functions on Software Startup 41
Changing Autorun Settings 42
Express Connect Option 42
Changing the Communications Port 43
Software Connection in Multi-Device Network 43
Setting Log Download Preferences 45
Configuring the MC-III EXP 46
Configuration Wizard 48
MC-III Main Screen 50
Buttons and Tools 51
System Setup 54
Time/Date Synchronization 54
Contract Hour 54
LCD Contrast Adjustment 54
Security Setup 55
Firmware Version Number 55
Serial Number 55
Communications Port 55
Slave Address 55
Baud Rate 56
Bus Delay 57
Bus Timeout 57
Software Communication Options 57
Wellsite Information 57
Turbine Input 58
Volume Display 58
Rate Display 59
Input Type and Sensitivity Configuration 59
Cut-Off Thresholds 59
Calculation Period 59
K-Factor Entry 60
K-Factor Units 60
K-Factor Type 60
K-Factor Backup 61
Gas Volume Correction (Supercompressibility Calculation) 62
4-20 mA Output 64
Enabling 4-20 mA Output 65
4-20 mA Output Testing 65

Pulse Output 67
Configuring Pulse Output 67
Pulse Output Testing 68
Saving and Uploading Configuration Files 69
Saving a Configuration File 69
Uploading a Configuration File 70
Advanced Access 72

Section 5—Flow Logs and Event Logs 73
Auto-Save Log Formats 73
Log Directory and Filenames 74
Flow Archive 74
Downloading Flow Logs 75
Viewing Trend Charts 76
Printing/Saving a Report 77
Viewing a Saved Report 79
Exporting Flow Logs 80
Event Archive 81
Downloading Event Logs 82
Printing/Saving a Report 83
Exporting Event Logs 83

Section 6 - MC-III EXP Maintenance 85
Lithium Battery Replacement 85
Alkaline Battery Replacement 87
Circuit Assembly Replacement 89
Keypad Replacement 91
Firmware Update 92
MC-III Parts List (CSA) 93
MC-III Parts List (ATEX) 94

Appendix A—MC-III EXP Hardware Options A-1
Explosion-Proof Reset/Control Switch A-1
Installation A-1
Operation A-2
Explosion-Proof Communications Adapter A-3
Assembly of the Plug Connector A-3
Connecting to the Communications Adapter A-4
Disconnecting the Communications Adapter A-5
Installation of Adapter (when purchased separately from an MC-III EXP) A-5
USB Communications Adapter A-6
User-Supplied Hardware A-7
Using the Adapter A-7
Covering the Adapter A-7
Adapter Kit Installation A-7

Appendix B—Software Program Options B-1
General Options B-1
Autorun Options B-2
Communications Options B-3
Express Connect Option B-4
Auto-Negotiate Option B-4
Enable Auto-Negotiated Baud Rate Option B-4

Toggle RTS Line Option B-4
Enable Modbus Address Support for Firmware Versions 1.06 through 1.08 ..... B-4
Timing Parameters B-4
Downloading Options B-5
Advanced Options B-6
Clear EEPROM B-6
Automatic Data Logging B-6

Appendix C—Lithium Battery Information C-1
Lithium Battery Disposal C-1
Transportation Information C-1
Material Safety Data Sheet C-1

Appendix D—Communications Protocol D-1
Introduction D-1
Supported Commands D-1
Data Types D-1
Registers D-2
System Configuration D-3
Product Code (register 1000) D-4
Firmware/Register Table Version Numbers (registers 1001, 1002) D-4
Manufacture Date/Sales Date (registers 1003, 1004) D-4
Slave Address (register 1009) D-4
Baud Rate (register 1010) D-4
Real Time D-5
Input Configuration D-5
Output Configuration D-8
Holding Registers (16-bit Mode) D-9
Holding Registers (16-bit Mode)—Least Significant Word First D-11
Base Units/Configured Units D-11
Conversion Factors D-11
Polling Registers D-12
Pointer/Daily/Event Pointer (registers 17001 through 17006) D-12
Real Date (registers 17007, 17008) D-12
Real Time (registers 17009, 17010) D-12
Totals D-12
Pulse Output Pulses (register 17077) D-12
Analog Output Current (register 17079) D-12
Calculated K-Factor (register 17081) D-12
Control Register D-15
Wellsite Parameters D-15
Log Data D-15
Enron Registers D-16
Enron Hourly/Daily Record Format D-16
Enron Event Record Format D-17
Reset Status D-17
Log Capacity D-17

Section 1—Introduction

The NuFlo™ MC-III™ EXP Flow Analyzer (Figure 1.1) packs a full spectrum of gas and liquid measurement functionality, high-speed performance, and log archive and retrieval capabilities in an easy-to-use, explosion-proof totalizer. Commonly used operations can be accessed from the six-button keypad on the front of the instrument or from the dynamic interface software, allowing you to calibrate and configure the unit quickly and easily.

When the MC-III EXP is installed in accordance with the provisions in this manual (*Section 2, page 13*), it is approved by CSA for use in hazardous areas in Canada and the United States, and meets the ATEX/IECEx standards for use in hazardous areas worldwide.

Operation

The MC-III EXP calculates and displays instantaneous flow rates and accumulated totals based on a turbine flowmeter input signal. The MC-III's microprocessor circuitry counts the pulses generated by a companion flowmeter, converts that data into volume and rate values in accordance with calibration settings, and displays the totalized data on a two-line liquid crystal display (LCD). The eight-digit top readout indicates total flow volume; the six-digit bottom readout indicates flow rate.



Figure 1.1—MC-III EXP flow analyzer (shown with CSA-approved pipe reducer/union, left, and the ATEX/ IECEx-approved tube adapter, right)

With the press of a single key, totals are saved to nonvolatile memory, minimizing the risk of data loss even if a power outage occurs.

Up to 384 daily logs, 768 hourly logs, and 345 event logs can be archived and accessed quickly on demand.

Offering a variety of user-configurable display options, input and output options, RS-485 Modbus® compatibility, flow logging, and turbine flowmeter linearization, the MC-III EXP is one of the most versatile totalizers on the market. For specifications, see *Table 1.1, page 3*.

An optional explosion-proof reset switch further expands the unit's versatility, making it possible to reset the total and view daily flow logs without opening the enclosure.

Product Identification

Each device is labeled with a serial tag that identifies the product by part number and serial number and identifies the device's input power requirements and safety classification. The CSA-approved device is marked as shown in Figure 1.2. The ATEX-approved device is marked as shown in Figure 1.3. A description of the electrical protection afforded by SIRA certification and associated safety markings are also shown in Figure 1.3.

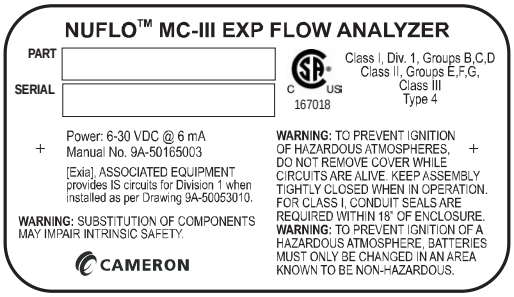

Figure 1.2—Serial tag for CSA-approved device

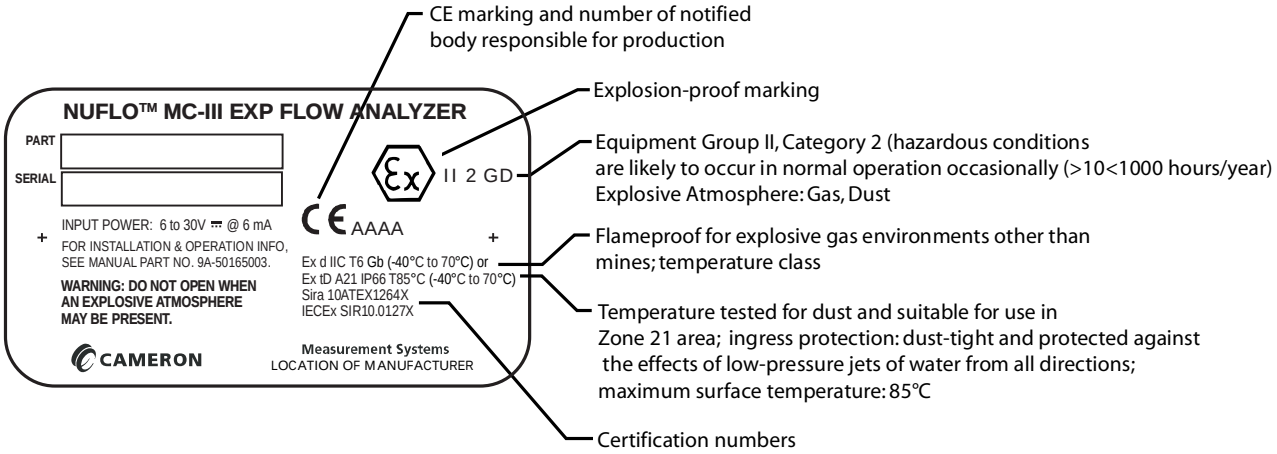

Figure 1.3—Serial tag for ATEX-approved device

Table 1.1—MC-III EXP Specifications

Electrical Safety Classification	Approved by CSA for US and Canada Class I, Div. 1, Groups B, C, D (explosion-proof) Type 4 enclosure T6 temperature class Approved by SIRA to ATEX 10ATEX 1264X IECEx SIR10.0127X  II 2 GD Ex d IIC T6 Gb (-40°C to 70°C) or Ex tD A21 IP66 T85°C (-40°C to 70°C)
System Power	Internal power supply • 3.6 VDC, D-size lithium battery (2-year typical life) • Alkaline battery pack containing 3 C-size industrial-grade batteries (CSA only) External power supply (6 to 30 VDC) with internal battery backup (reverse polarity protected) Loop-powered (4-20 mA) with internal battery backup (reverse polarity protected) Loop power: 8 to 30 VDC Load resistance: 1100 ohms @ 30 VDC; 200 ohms @ 12 VDC
Operating Temperature	Lithium-Powered: -40°C to 70°C (-40°F to 158°F) Alkaline-Powered (CSA only): -18°C to 55°C (0°F to 130°F) LCD contrast is reduced below -20°C (-4°F)
LCD Display	8-digit Total (volume) display (7-segment characters) 6-digit Rate display (11-segment characters for easy-to-read prompts) 0.3” character height Adjustable contrast and update period User-selectable units of measurement (Total): • Preprogrammed units: BBL, GAL, LIT, M^3, CF, SCF, any unit x 1000 • User-defined units User-selectable units of measurement (Rate): • Preprogrammed units: BBL, GAL, LIT, M^3, CF, SCF (per DAY, HR, MIN, SEC), any unit x 1000 (per DAY, HR, MIN, SEC) • User-defined units
Keypad	6-key membrane switch
Communications/ Archive Retrieval	RS-485 Modbus® communications with transfer speeds up to 115.2K (allows full download in less than 1 minute)
Logging	384 daily logs 768 hourly logs 345 event logs

Table 1.1—MC-III EXP Specifications

Inputs	Turbine Meter Input Configurable sensitivity adjustment via front panel Sensitivity adjustment range: 20 mV P-P to 40 mV P-P Frequency range: 0 to 3500 Hz Remote Reset Input Optically isolated 3.0 to 30 VDC Pulse duration > 3 seconds to reset Explosion-Proof Reset Switch (option) Press and hold > 3 seconds, then release to reset total Press and hold < 1 second, then release to view daily log data Pulse Input Optically isolated 3.0 to 30 VDC Frequency range: 0 to 3500 Hz
Outputs	Analog Output 4-20 mA, loop-powered (two-wire) 16-bit resolution Accuracy: 0.1% of full scale @ 25°C, 50 PPM/°C temperature drift Loop power: 8.0 to 30 VDC Zero and full-scale engineering values configurable from front panel RS-485 Communications Baud rates: 300, 600, 1200, 2400, 4800, 9600, 19200, 38400, 57600 and up to 115.2K Volumetric Pulse Output Solid-state relay Output rating: 60 mA max. @ 30 VDC, on-state drop = 1.4 VDC @ 50 mA, 0.25 VDC @ 10 mA Configurable pulse width (duration): 10 to 60,000 ms Amp & Square (Flowmeter Frequency) Output Open-drain transistor output of turbine meter input signal Output rating: 50 mA @ 30 VDC, on-state drop = 0.3 VDC @ 50 mA, 0.1 VDC @ 10 mA (Analog output and amp & square outputs cannot be used simultaneously.)
Modbus®	RTU mode Modbus® supports 16-bit and 32-bit holding registers. For more information, see *Appendix D, page D-1.*
Enron Modbus®	Flow log parameters (time stamp, period total, period run time, and supply voltage) and download method are Enron-compatible.

Table 1.1—MC-III EXP Specifications

System Requirements	Operating System - Windows XP, Windows Vista®, or Windows 7 Computer/Processor - 1 GHz or faster Pentium-compatible CPU Memory - 128 MB of RAM Hard Disk Space - 21 MB for program files, 30 MB for Adobe Reader, adequate space for data files Drive - CD-ROM for install Display - 800 x 600 (SVGA), 16-bit (thousands of colors) color display or greater Browser - Internet Explorer 6 or later Internet Connection - for web links, tech support Communications Port - physical or virtual RS-232 compatible serial port

Key Product Features

This section presents an overview of key features of the MC-III EXP. Many of these features are discussed in more detail in *Section 3, page 29,* and *Section 4, page 39* (configuration procedures) and *Section 5, page 73* (flow log archival).

Key features discussed here include:

- LCD display
- keypad
- interface software
- power supply
- calibration options
- input options
- output options
- flow log archival
- password-protected security

LCD Display

The liquid crystal display (*Figure 1.4, page 6*) provides a simultaneous indication of accumulated total (top readout) and flow rate (bottom readout). The eight-digit total display uses 7-segment characters to form numbers and letters, which results in a combination of uppercase and lowercase letters. The six-digit flow rate display uses 11-segment characters to form numbers and letters for improved readability. When the keypad is used to calibrate the MC-III EXP, the name of the menu option selected appears in the lower (rate) display, and settings are entered in the top (total) display.

Flow volume can be measured in barrels, gallons, liters, cubic meters, cubic feet, standard cubic feet or other user-defined units. A multiplication factor is also available for indicating flow volume in terms of 1,000 units. The unit of measure for the Total readout and the decimal point position are selected by the operator during calibration. If a user-defined unit is used, none of the preprogrammed volume units will be visible on the display during operation.

Flow rate can be measured in a wide variety of preprogrammed units, or other user-defined units. The flow rate unit of measure is selected in two steps: (1) a volume unit is chosen and (2) a time-base unit (per day, per hour, per minute, or per second) is chosen. Users can choose any combination of preprogrammed volume and time units in establishing the flow rate engineering unit (for example, gallons per hour, gallons per day, or

gallons per minute). Also, the volume unit used for the flow rate can be different from the volume unit used to read Total volume. The unit of measure for the Rate readout and the decimal point position are selected by the operator during calibration.

The daily index (Day) display is a two-digit number for selecting a daily archive log for viewing. The number shown here represents the number of days that have passed since the log was saved. For example, an entry of 01 would yield yesterday's log. An entry of 05 would yield the log generated 5 days prior. Up to 99 consecutive daily logs can be viewed using the keypad. In addition, up to 384 daily logs, 768 hourly logs, and 345 event logs can be viewed through the interface software.

The LCD contrast can be adjusted with the interface software (see *Section 4, page 39*).

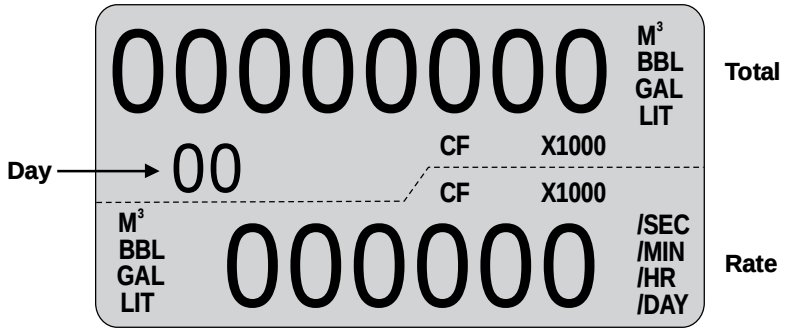

Figure 1.4—LCD display showing location of the Total, Rate, and daily index (Day) displays. Only the units of measurement selected for displaying total and rate will be visible during normal operation.

Keypad

The six-button keypad allows users to perform a basic configuration of the instrument. *Figure 1.5, page 7*, summarizes the functions that can be accessed with each button. Most parameters can be configured in seconds by selecting one of the three menu keys (K-Factor, Output, or Display), navigating settings with the arrow buttons, and saving the selections with the Enter key.

Section 3, page 29, contains procedures for configuring the MC-III EXP using the keypad. Icons of the six buttons provide a pictorial reference to help guide users through each step of configuration.

Important: Some configuration parameters are accessible only through the interface software. See *Section 4, page 39*, for instructions on configuring the instrument using the software.

Interface Software

Developed within the familiar Windows environment, the MC-III interface software is an intuitive and easy-to-use application that provides access to all controls for setting up and operating the instrument. The interface tailors the controls to the user's needs, providing three options for configuring the instrument:

- a "Configuration Wizard," which steps through the most common configuration tasks
- individual configuration menus for accessing specific settings
- an advanced menu that gives host programmers access to Modbus® registers

For instructions on installing the interface software and entering configuration parameters via the interface software, see *Section 4, page 39*.

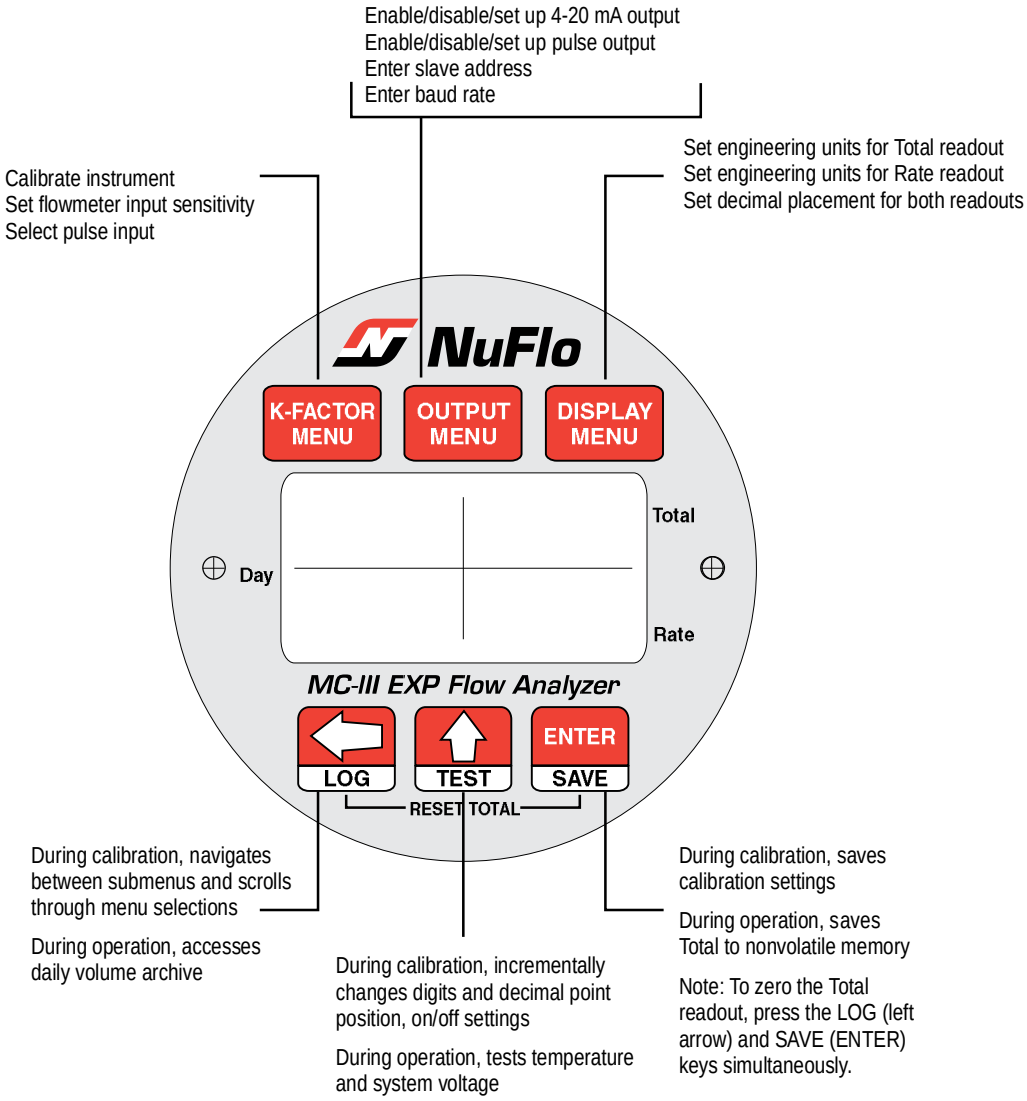

Figure 1.5—MC-III EXP keypad functions

Power Supply—CSA-Approved Units

The CSA-approved MC-III EXP is shipped with either a lithium battery or an alkaline battery pack. Alternately, the MC-III EXP may be powered by an external power source; in this case, the lithium battery or alkaline battery pack provides a backup power supply, significantly extending battery service life. A low-power microprocessor enables the MC-III EXP to operate approximately 2 years on a single lithium battery.

Wiring diagrams for connecting an external power supply are provided in *Section 2, page 13*.

Power Supply—ATEX-Approved Units

The ATEX-approved MC-III EXP is shipped with a lithium battery. Alternately, the MC-III EXP may be powered by an external power source; in this case, the lithium battery provides a backup power supply, significantly extending battery service life. A low-power microprocessor enables the MC-III EXP to operate approximately 2 years on a single lithium battery.

Wiring diagrams for connecting an external power supply are provided in *Section 2, page 13*.

Multipoint Linearization

The MC-III interface software supports up to 12 calibration points in addition to single-point calibration based on the K-factor provided with the turbine flowmeter. See *K-Factor Type, page 60*, for more information.

Gas Volume Correction

Gas turbine meters are calibrated in actual cubic feet (ACF), and measure gas in actual cubic feet. In some applications, a user may benefit from referencing gas measurements back to standard conditions by measuring in terms of standard cubic feet (SCF). The MC-III EXP makes this process quick and easy, by using fixed average values for the flowing gas temperature and flowing gas pressure. See *Gas Volume Correction, page 62*, for more information.

Input Options

The flowmeter signal can be obtained from a magnetic pickup or a pre-amplifier device. The sensitivity of the flowmeter input may be adjusted with the instrument keypad or the interface software. See *Section 2, page 13*, for wiring diagrams. See *Section 3, page 29,* and *Section 4, page 39,* for configuration procedures.

Output Options

The MC-III EXP standard circuitry provides:

- a scaled pulse output representing an increment in volume for each pulse
- a loop-powered 4-20 mA output representing the flow rate
- a flowmeter frequency output for use with remote equipment to derive flow rate and volume
- an RS-485 output for communication with interface software or other telemetry equipment

When the 4-20 mA rate output feature is used, the MC-III EXP is powered by the current loop, and the lithium battery or alkaline battery pack is used as a backup supply.

The pulse output and 4-20 mA output features should be turned off when not required for reduced current consumption. See *Section 2, page 13,* for wiring diagrams. See *Section 3, page 29,* and *Section 4, page 39,* for configuration procedures.

Flow Log Archival

The MC-III EXP saves up to 384 daily logs and 768 hourly logs in nonvolatile memory. By connecting with the interface software, users can download the logs for viewing and/or printing in tabular format or in a trend chart.

Users can also export daily and hourly logs to a spreadsheet. For more information, see *Section 5, page 73*.

Event Log Archival

The MC-III EXP saves up to 345 user event logs. Event logs are generated to track user changes such as K-Factor changes, input setting changes, power-on reset and "watch-dog" reset, flow cut-off and frequency cut-off.

By connecting with the interface software, users can download the logs for viewing and/or printing in tabular format. In addition to showing old and new values, each event log is time-stamped, and includes the register associated with the change. For more information, see *Section 5, page 73*.

Password-Protected Security

A keypad security access code prevents unauthorized personnel from altering the calibration or accumulated volume data in the instrument. The security feature may be disabled if this protection is not required.

Password-protected security access is enabled using the interface software. When this feature is enabled, the user will be prompted for a password when attempting to enter any menu from the keypad. For more information, see *Security Setup, page 55*.

Optional Features

Explosion-Proof Reset/Control Switch

An optional external reset/control switch allows the user to zero the total and view daily logs instantaneously without opening the enclosure or accessing the interface software. The switch can be mounted in either of the conduit openings near the top of the MC-III EXP enclosure. For installation and wiring instructions, see *Explosion-Proof Reset/Control Switch, page A-1*.

Important: The switch is approved by CSA and SIRA (ATEX) for use in hazardous areas. The CSA-approved model is Part No. 9A-30054001. The ATEX-approved model is Part No. 9A-30054002.

Zeroing the Total. To reset the total with an explosion-proof switch, press and hold the switch for 3 seconds, then release it.

Important: When resetting the total with the explosion-proof reset switch, do not release the switch prematurely. Releasing the switch too quickly (before 3 seconds have passed) will activate the daily log view function and WILL NOT reset the volume to zero.

Viewing Daily Logs. To view daily logs with the explosion-proof switch, press the switch for 1 second and release it. Subsequent press-and-release actions increment the daily index, allowing the user to select a specific daily total. Additionally, when the log viewing function times out, the accumulated total is automatically saved to memory.

Saving the Total. When the daily log display times out, the MC-III EXP will automatically save the accumulated total.

RS-485 Communications Adapter

An explosion-proof communications adapter provides an RS-485 connection for connecting a laptop or PC to the instrument without removing the instrument cover. When the adapter is ordered with an MC-III EXP, it is factory installed. It may be relocated to either conduit opening in the instrument housing. When ordered separately, the adapter is easily installed using the instructions provided in this manual. For installation and wiring instructions, see *Explosion-Proof Communications Adapter, page A-3*.

Important: The RS-485 communications adapter is approved by CSA and SIRA (ATEX) for use in hazardous areas. The CSA-approved model is Part No. 9A-90017004. The ATEX-approved model is Part No. 9A-90017008.

USB Communications Adapter (CSA-Approved Units Only)

The USB communications adapter allows an MC-III EXP to be connected directly to a USB port of a laptop or PC. A user-supplied universal USB cable is required. The adapter is factory-installed when purchased with an MC-III EXP. It is also available as a kit with an installation CD for upgrading communications in a field unit. See *USB Communications Adapter, page A-6*.

Important: The USB communications adapter is approved by CSA for use in hazardous areas. The CSA-approved model is Part No. 2295524-01. The adapter kit, which includes an installation CD, is Part No. 2295634-01.

RS-485 IS Barrier (CSA-Approved Units Only)

The RS-485 output of a CSA-approved MC-III is approved for intrinsically safe installations. An intrinsically safe barrier assembly with a conduit seal enables the RS-485 output to be used as an intrinsically safe output. In such installations, only the turbine flowmeter input may be used. See *Figure 2.18, page 28*, for an IS barrier assembly wiring diagram.

Commonly Used Functions

While the functions of the MC-III EXP are too numerous to mention, some of the most commonly used functions are detailed in this section. They include:

- reading the rate and accumulated total
- saving totals to memory
- resetting the total
- viewing daily and hourly logs
- saving and uploading configuration files
- exporting log data to spreadsheet
- saving log data in a report

Reading Totals

Current totals can be viewed from the LCD on the front of the MC-III EXP or from the interface software (MC-III Main screen). The software calculates the flow total and updates the LCD display every 4 seconds, by default. The user can adjust the calculation period with the interface software. See *Calculation Period, page 59*, for more information.

Saving Totals to Memory

Hourly and daily totals are automatically saved to nonvolatile memory. A user may save an accumulated total at any time by opening the enclosure and pressing ENTER (SAVE) on the keypad. In the event of a power failure, the last saved total will be displayed on the LCD when power is restored. See also *Explosion-Proof Reset/Control Switch, page 9*.

Note: Always save the accumulated total before replacing batteries.

Resetting the Total

Totals can be reset to zero using the keypad, the interface software, an explosion-proof switch mounted in the top of the enclosure (if equipped), or a pulse from an external device.

- To reset the total with the keypad, press LEFT ARROW (LOG) and ENTER (SAVE) keys simultaneously.
- To reset the total with the interface software, double-click the NuFlo MC-III icon on the computer desktop and wait for the software to connect to the instrument; then select MC-III Main from the Device Autorun Options screen, and click on the "Reset Flow Total" button in the lower right corner of the Main screen.

- To reset the total with an explosion-proof switch, press and hold the switch for 3 seconds, then release it. See also *Explosion-Proof Reset/Control Switch, page 9*.
- To reset the total with an external pulse generator located in safe area, configure the pulse to be active for 3 seconds. See also *Remote Reset Input, page 23*.

Viewing Daily and Hourly Logs

Each day, as the user-defined contract hour passes, a daily flow total is saved to nonvolatile memory. Hourly logs are also automatically saved. A total of 384 daily logs and 768 hourly logs are accessible for viewing and exporting using the interface software. See *Section 5, page 73*, for details.

Up to 99 daily flow log totals can be viewed from the LCD. Hourly flow log totals are accessible only through the interface software.

To view daily flow totals from the LCD, perform the following steps:

1. Press the LEFT ARROW (LOG) key on the keypad. The words "Daily Volume Archive" will scroll across the bottom of the LCD and the day index will display "01." The daily flow total recorded at the last contract hour will appear at the top of the LCD.

   The index number represents the number of days previous to the current date. For example, yesterday's totals are read by entering an index of "01"; totals from two days previous are read by entering "02."

2. Press UP ARROW (TEST) to increment the index (01, 02, 03...); press LEFT ARROW (LOG) to decrement the index (01, 99, 98...).

3. Press ENTER (SAVE) to exit the Daily Volume Archive menu. (After 2 minutes of inactivity, the Daily Volume Archive menu will timeout and the total readout will be restored automatically.)

The optional explosion-proof reset switch also allows users to view daily log totals. For more information, see *Explosion-Proof Reset/Control Switch, page 9.*

Saving and Uploading Configuration Files

The MC-III interface software allows users to save an unlimited number of configuration files to their computer. In the event that a configuration setting gets changed unintentionally or a user simply wants to restore the settings he used previously, the user can upload the configuration file and resume operation within minutes. The upload function also allows a configuration file to be loaded quickly into multiple devices. The default directory for saving configuration files is C:\NuFlo log data\MC-III. However, the user can specify a different location, if desired.

For complete information, see *Saving and Uploading Configuration Files, page 69*.

Exporting Log Data

Flow logs and event logs can be directly exported to an .xls or .csv file. For complete information, see *Exporting Flow Logs, page 80*, and *Exporting Event Logs, page 83*. The default directory for exported logs is C:\NuFlo log data\MC-III. However, the user can specify a different location, if desired.

Saving Log Data in a Report

Flow logs can be saved in a report format that can be loaded back into the software for viewing or printing at a later time. For complete information, see *Printing/Saving a Report, page 83*. The default directory for log reports is C:\NuFlo log data\MC-III\<WELL NAME>. However, the user can specify a different location.

Section 2—Installation

The MC-III™ EXP is fully assembled at the time of shipment and ready for mounting to a flowmeter. Field wiring enters the MC-III EXP enclosure through either of two threaded conduit openings in the top of the enclosure. When not in use, the openings are sealed with pipe plugs (Figure 2.1). Ground screws are provided both inside and outside the enclosure.

The device is shipped with ¾" recessed pipe plugs installed facing right and left, and the pipe union facing downward. If the device is equipped with an explosion-proof reset switch or a communications adapter, only one plug is required. The switch may be installed in the right or left conduit opening.

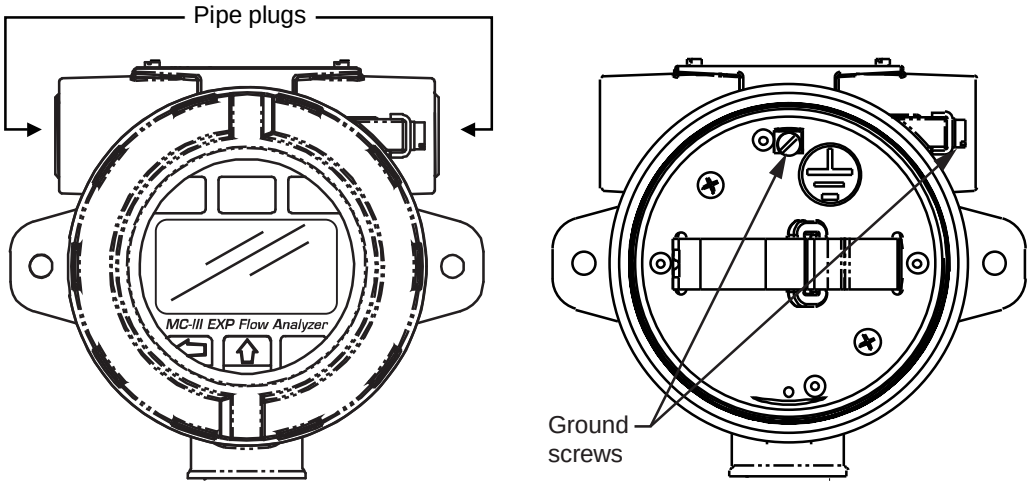

Figure 2.1—Enclosure entry and ground screw locations

Installation requirements and meter mounts vary with certification regulations and meter types. For ATEX installation requirements, see Hazardous Area Installations (ATEX) below. For CSA installation requirements, see *Hazardous Area Installations (CSA), page 16*.

Cameron recommends that operators configure the device prior to mounting if the instrument is to be installed in a hazardous area. The enclosure must be opened to configure the device, either via keypad controls or via software.

WARNING: Once the instrument is mounted in a hazardous area, the cover should not be removed unless the area is void of combustible gas and vapors.

Hazardous Area Installations (ATEX)

The ATEX-certified MC-III EXP is fully compliant with European ATEX Directive 94/9/EC, Annex II,1.0.6.

The following instructions apply to equipment covered by certificate numbers 10ATEX1264X and IECEx SIR10.0127X :

- The device may be used in the presence of flammable gases and vapours with apparatus groups IIA, lIB and IIC and with temperature classes T1, T2, T3, T4, T5, and T6.
- The device is certified for use in ambient temperatures in the range -40°C to 70°C and should not be used outside this range.

- The device has not been assessed as a safety-related device (as referred to by Directive 94/9/EC Annex II, clause 1.5).
- Installation shall be carried out by suitably trained personnel in accordance with the applicable code of practice (EN 60079-14 within Europe).
- Repair of this equipment shall be carried out by Cameron or in accordance with the instructions in this manual.
- If the instrument is likely to come into contact with aggressive substances, the user is responsible for taking suitable precautions to prevent it from being adversely affected, thus ensuring that the type of protection is not compromised.
  - Aggressive substances may include, but are not limited to, acidic liquids or gases that may attack metals, or solvents that may affect polymeric materials.
  - Suitable precautions may include, but are not limited to, regular checks as part of routine inspections or establishing from the material's data sheet that it is resistant to specific chemicals.

Conditions for Safe Use (ATEX)

- In accordance with EN60079-0, Clause 16.5, all cable and cable glands must be rated for 80ºC.
- Do not remove the cover unless the area is void of combustible gas and vapors.
- Before removing the pipe plug to install a communications adapter, or disassembling the union nut and blanking plug in a pre-installed communications adapter, make sure the area is nonhazardous. Reinstall the pipe plug in accordance with the instructions in this manual.
- An ATEX-approved standoff tube shall be used with a Barton 7000 Series turbine pickup coil boss or a NuFlo turbine pickup coil boss in accordance with certificate SIRA 03ATEX1474U. See the *MC-III Parts List (ATEX), page 94*, for part numbers.
- Replace the lithium battery only with the ATEX-approved battery supplied by Cameron (Part No. 9A-90099000).
- The lithium battery that powers the MC-III EXP is a sealed unit; however, should a lithium battery develop a leak, toxic fumes could escape upon opening the enclosure. Ensure that the instrument is in a well-ventilated area before opening the enclosure to avoid breathing fumes trapped inside the enclosure. Exercise caution in handling and disposing of spent or damaged batteries.

Mounting Options (ATEX)

The ATEX-approved MC-III EXP may be mounted directly to a flowmeter, or mounted remotely on a pole and connected to a flowmeter with explosionproof signal cable. The type of meter mount required varies with the meter in use. See Figures 2.2 through 2.4 for installation dimensions.

- Mount the device to a NuFlo turbine meter. A 3/4-in. to 1-in. standoff tube is required (*Figure 2.2, page 15*).
- Mount the device to a Barton 7000 Series turbine meter. A 3/4-in. to 3/4-in. stainless steel standoff tube is required (*Figure 2.3, page 15*). (The 3/4-in. to 1-in. reducer supplied with the Barton 7000 Series meter is not required when the standoff tube is used.)
- Mount the device to a flat, vertical surface.
- Remote-mount the device to a 2-in. pole using a NuFlo hardware kit (*Figure 2.4, page 16*). Pole mounting may be preferred where limited space or pipe vibration prohibits direct-mount installation. For best results, install the device as near as possible to the meter to minimize the length of explosionproof signal cable that must be used for communications. Stranded, shielded cable is recommended.

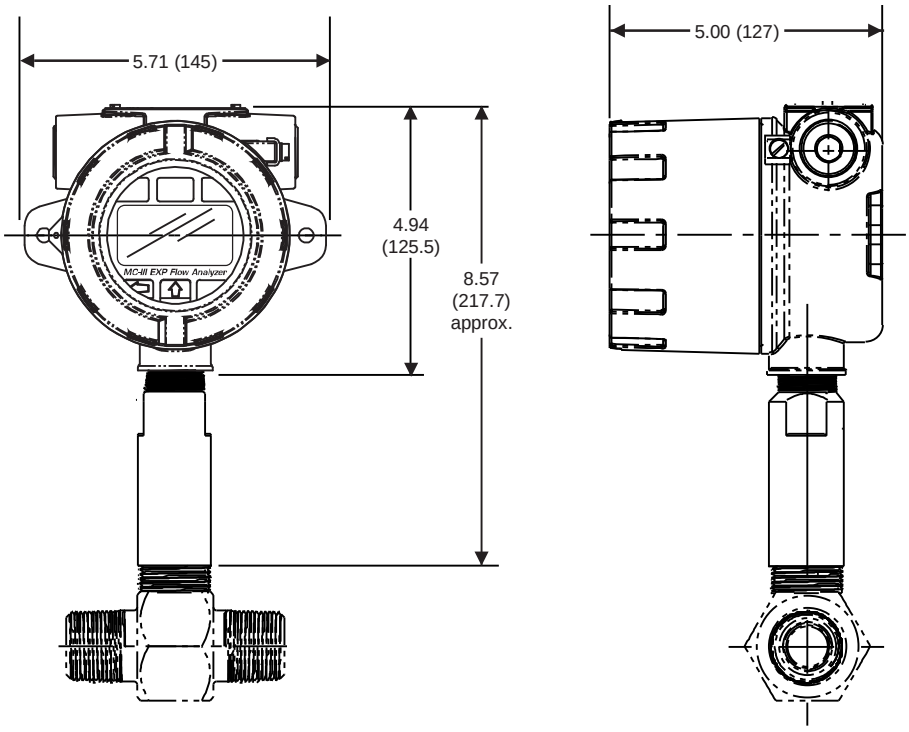

Figure 2.2—Direct mount to NuFlo turbine meter with 3/4-in. to 1-in. standoff tube (ATEX)

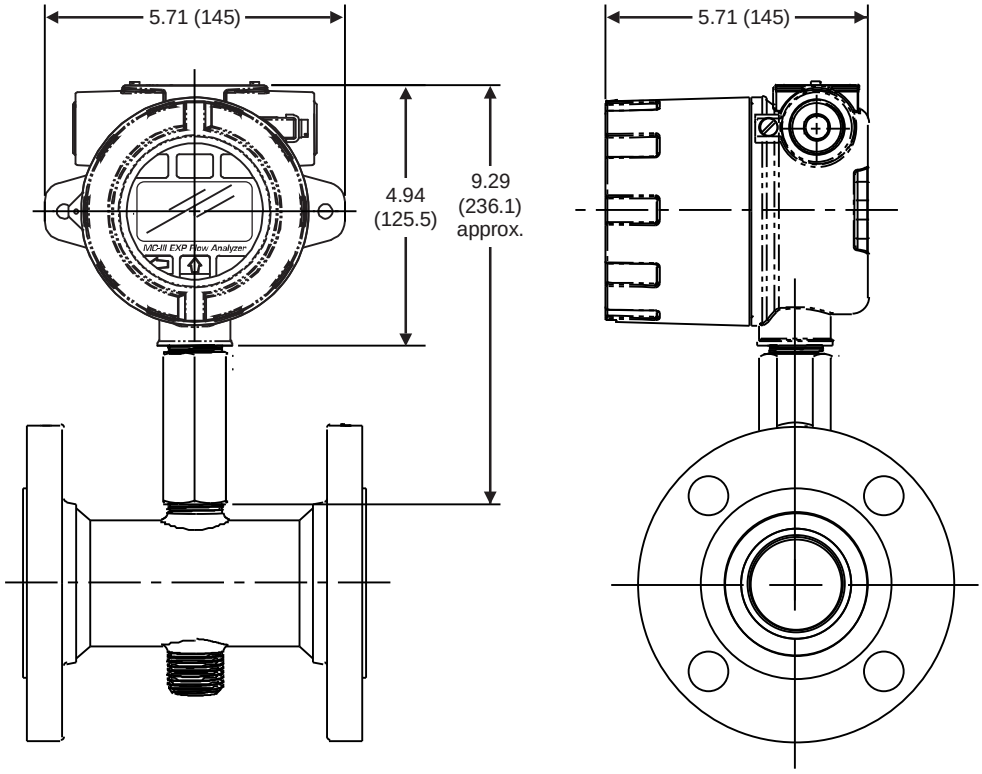

Figure 2.3—Direct mount to a Barton 7000 series flowmeter with 3/4-in. to 3/4-in. standoff tube (ATEX)

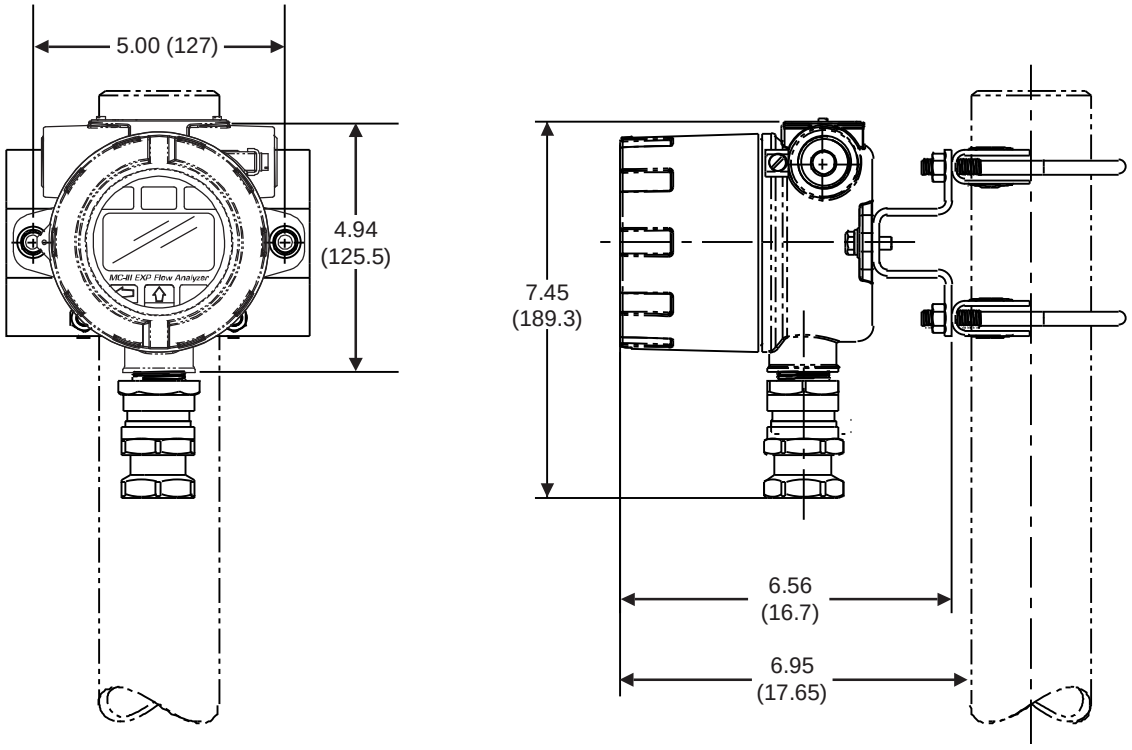

Figure 2.4—Remote mount on a 2-in. pole using a NuFlo hardware kit (Part No. 9A-30028004)

Hazardous Area Installations (CSA)

The CSA-approved MC-III EXP has been certified as explosion proof for Class I, Division I, Groups B, C, and D for use in the US and Canada.

Conditions for Safe Use (CSA)

- The device may be used in the presence of flammable gases and vapours with apparatus groups B, C, and D and with temperature classes T1, T2, T3, T4, T5, and T6.
- The device is certified for use in ambient temperatures in the range -40°C to 70°C and should not be used outside this range.
- Do not remove the cover unless the area is void of combustible gas and vapors.
- Before removing the pipe plug to install a communications adapter, or disassembling the union nut and blanking plug in a pre-installed communications adapter, make sure the area is nonhazardous. Reinstall the pipe plug in accordance with the instructions in this manual.
- All field wiring must conform to the National Electrical Code, NFPA 70, Article 501-4(b) for installations within the United States or the Canadian Electric Code for installations within Canada. State and local wiring ordinances may also apply. All field wiring must be rated for temperatures of 90°C or higher, and have a wire range of 22 to 14 AWG. Terminal block screws must be tightened to a minimum torque of 5 to 7 in-lb. to secure the wiring within the terminal block. Only personnel who are experienced with field wiring should perform these procedures.
- Do not use Teflon® tape on threads of the union, reducer, or pipe plugs. Use of Teflon® tape will void the explosion-proof rating of the instrument.

- Replace the lithium battery only with the CSA-approved battery supplied by Cameron (Part No. 9A-100005111).
- Replace the optional alkaline battery pack only with the CSA-approved battery pack supplied by Cameron (Part No. 9A-50099002).
- The lithium battery that powers the MC-III EXP is a sealed unit; however, should a lithium battery develop a leak, toxic fumes could escape upon opening the enclosure. Ensure that the instrument is in a well-ventilated area before opening the enclosure to avoid breathing fumes trapped inside the enclosure. Exercise caution in handling and disposing of spent or damaged batteries.

Mounting Options (CSA)

The CSA-approved MC-III EXP is available in either of two enclosure styles. The standard enclosure shown on the cover of this manual and in *Figure 2.5, page 18,* features integral mounting holes on either side of the enclosure, allowing it to be mounted to a flat bulkhead.

The alternate enclosure (*Figure 2.6, page 18*) does not have the bulkhead mounting holes on the sides. Another distinguishing feature is the bright red ring that frames the display window. The alternate enclosure is slightly taller than the standard enclosure.

The MC-III EXP may be mounted directly to a flowmeter, or mounted remotely on a pole and connected to a flowmeter with explosionproof signal cable. The type of meter mount required varies with the meter in use. See *Figure 2.5* through *Figure 2.7* for installation dimensions.

- Mount the device to a NuFlo turbine meter or a Barton 7000 Series turbine meter. A CSA-approved pipe reducer and union connector is required (*Figure 2.5, page 18*). *Figure 2.6, page 18,* shows the same installation with the alternate MC-III enclosure.

  If mounting to the Barton 7000 Series meter, a 3/4-in. to 1-in. reducer supplied with the meter is used to achieve the 3/4-in. connection required to mate the union to the meter.
- Mount the device to a flat, vertical surface. The standard enclosure is ideal for a bulkhead mount; the alternate enclosure is not recommended for bulkhead mounting.
- Remote-mount the device to a 2-in. pole using a NuFlo hardware kit (*Figure 2.7, page 19*). Pole mounting may be preferred where limited space or pipe vibration prohibits direct-mount installation. For best results, install the device as near as possible to the meter to minimize the length of explosionproof signal cable that must be used for communications. Stranded, shielded cable is recommended.

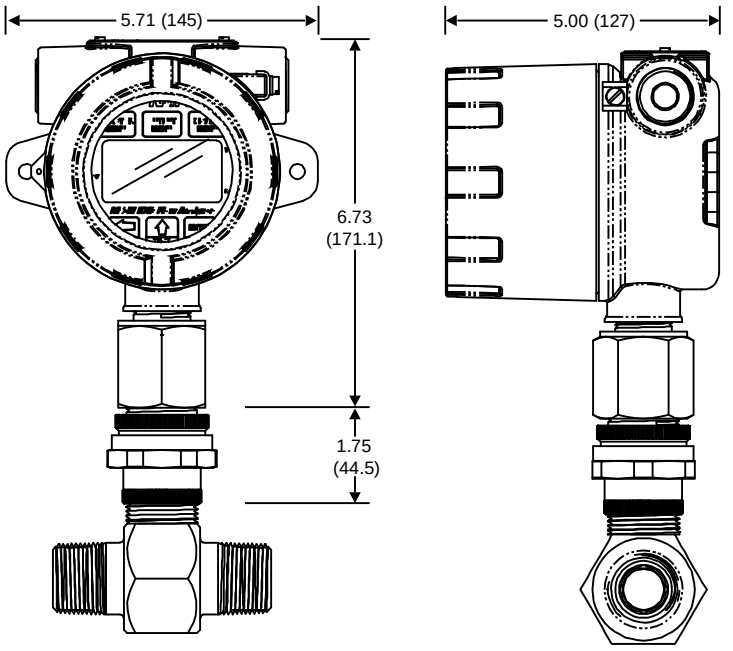

Figure 2.5—Direct mount (standard MC-III EXP enclosure) to NuFlo turbine meter with pipe reducer and union (CSA)

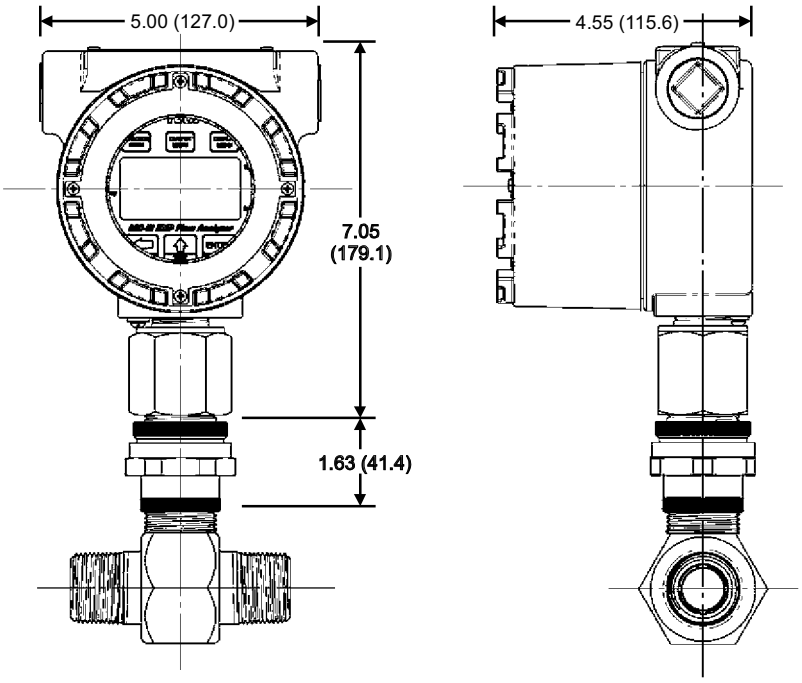

Figure 2.6—Direct mount (alternate MC-III EXP enclosure) to NuFlo turbine meter with pipe reducer and union (CSA)

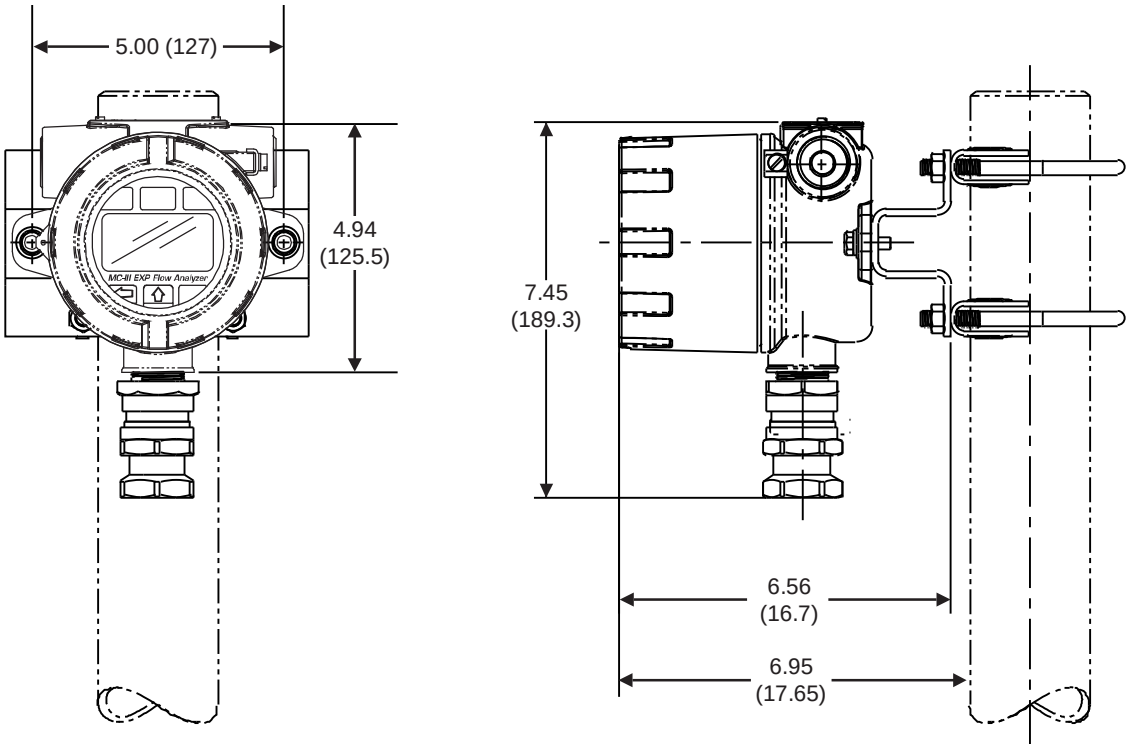

Figure 2.7—Remote mount on a 2-in. pole using a NuFlo hardware kit (Part No. 9A-30028004)

Installing the MC-III EXP

If the device is to be installed in a hazardous area, configure the device prior to mounting it. See Sections 3 and 4 for instructions.

1. Make sure the flowmeter and magnetic pickup are properly installed as follows:
   a. Install the turbine flowmeter in the flow line.
   b. Lightly grease the threads on both ends of the magnetic pickup, taking care to keep grease off of the connector contacts. If the connector is plastic, apply grease only to the end that threads into the meter.
   c. Install the magnetic pickup in the flowmeter.
4. Position the MC-III EXP above the flowmeter. If installing an ATEX-approved MC-III EXP with a tube adapter, make sure the signal cable is disconnected from the MC-III circuit board. This will prevent the cable from being damaged from twisting when the tube adapter is threaded onto the meter in step 6.
5. Plug the MC-III EXP cable connector into the magnetic pickup and hand-tighten the knurled nut on the connector.
6. Screw the MC-III EXP onto the flowmeter threads surrounding the magnetic pickup with the display facing the desired direction.
7. Tighten all pipe connections.

Caution: Do not use Teflon® tape on threads of the union, reducer, or pipe plugs. Use of Teflon® tape will void the explosion-proof rating of the instrument.

Field Wiring

The MC-III EXP supports connections for the following: internal power (battery), external power, turbine flowmeter input, pulse input, remote reset input, pulse output, 4 to 20 mA output, flowmeter frequency (amp & square) output, and RS-485 output.

Wiring diagrams for each connection are provided below.

Caution: **For a CSA-approved MC-III EXP installed in a hazardous location, all field wiring must conform to wiring methods for explosion-proof installations as defined in the National Electric Code for installations within the United States or as specified in the Canadian Electric Code for installations within Canada. State and local wiring ordinances may also apply.**

To wire the MC-III EXP for operation, complete the following field connections:

1. Unscrew the cover of the enclosure and remove it.
2. Using a small standard blade screwdriver, remove the two #4-40 × 7/8" screws located to the right and left side of the display.
3. Lift the display/keypad assembly from the enclosure, making sure the circuit assembly does not contact the enclosure.
4. Connect the lithium battery or alkaline battery pack to the J1 connector marked "BATTERY" near the top of the circuit assembly.
5. Connect wiring for external power, if appropriate. See *Figure 2.8, page 21*.
6. Connect the flowmeter or pulse input wiring to terminal block TB1. See *Figure 2.9, page 22,* and *Figure 2.10, page 22*.
7. Connect wiring for the remote reset input to terminal block TB1, if appropriate. See *Figure 2.11, page 23* and *Figure 2.12, page 23.*
8. Connect wiring for output signals, if appropriate. See *Figure 2.13, page 24, through Figure 2.17, page 27.*
9. Place the circuit assembly over the standoffs and fasten with the two #4-40 × 7/8" screws, ensuring that all connector wiring is inside the enclosure and in no position where it may be damaged when the enclosure cover is replaced.
10. Recalibrate the MC-III EXP (if necessary).
11. If external and internal power supplies were removed, reset the clock to ensure that the time stamps in the log data are accurate. The clock is reset using the MC-III interface software. See *Time/Date Synchronization, page 54*.
12. Replace the enclosure cover.

Internal Power Supply

The MC-III EXP is shipped with one of three internal power supplies:

- a CSA-approved 3.6V lithium battery
- an ATEX-approved 3.6V lithium battery
- a shrink-wrapped alkaline battery pack containing three C-size industrial-grade batteries (available only with CSA-approved devices)

Low-power microprocessor technology enables the MC-III EXP analyzer to operate approximately 2 years on a single lithium battery. The lithium battery is strongly recommended for use in extreme temperatures (below -20°C).

Users can power the instrument from an external power supply or a 4-20 mA current loop, and use the lithium or alkaline battery (where applicable) as a backup power supply. The use of an alternate power source extends battery life and helps ensure that timekeeping and volume accumulation will not be interrupted during a power failure.

External Power Supply

The MC-III EXP can be connected to a remote power supply by a two-conductor cable (Figure 2.8). The power supply and cable must be capable of supplying 6 to 30 VDC @ 10 mA. This capability is available only if the 4-20 mA rate output is not used.

A Zener diode (Part No. 1.5KE33CA) must be installed for CE approval.

Caution: When using the amp & square output with the external power supply, make sure the power supplies for both features share a common negative (-) terminal or that they are totally isolated from each other, since both share a common negative (-) connection.

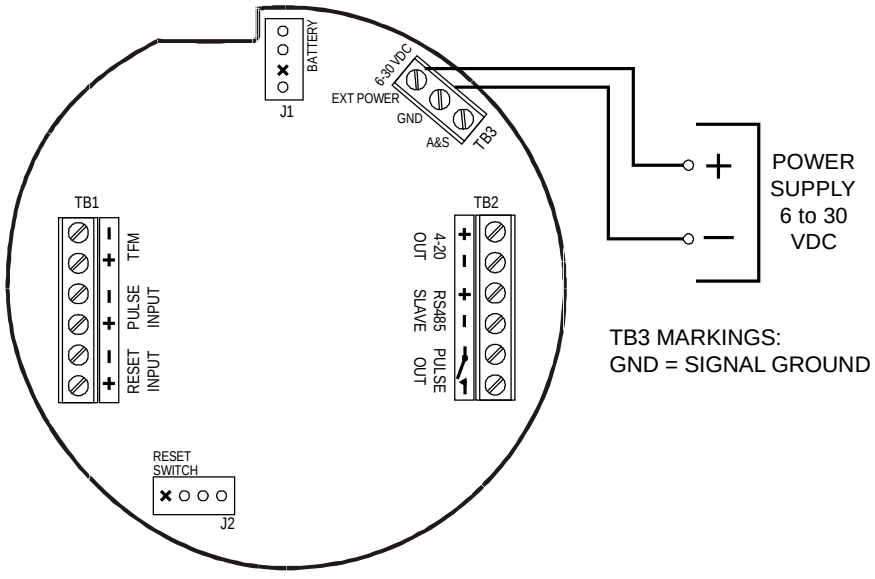

Figure 2.8—External power supply wiring

Turbine Flowmeter (TFM) Input

The TFM input provides the turbine flowmeter input signal generated by a magnetic pickup, enabling the MC-III EXP to calculate and display instantaneous flow rates and accumulated totals.

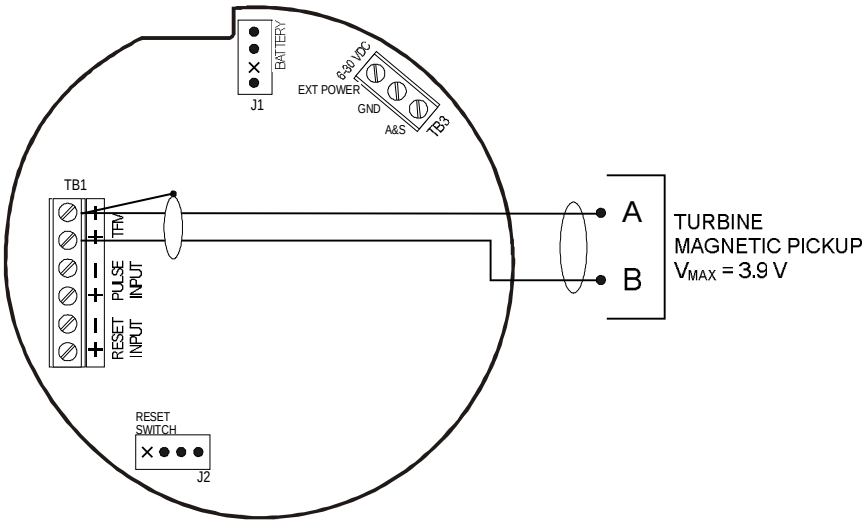

Figure 2.9—Flowmeter input wiring

Pulse Input

The pulse input provides an optically isolated input in systems where a preamplifier is inserted between the sensor and the MC-III EXP.

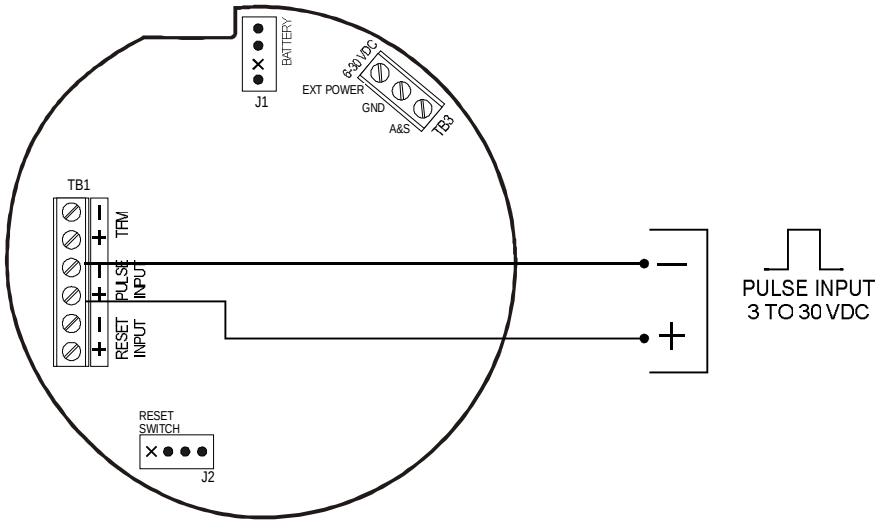

Figure 2.10—Pulse input wiring

Remote Reset Input

The remote reset input allows the operator to reset the accumulated volume on the MC-III EXP to zero without opening the enclosure. This input is optically isolated. The input is shown connected in two ways, with a power supply and switch in a safe area (Figure 2.11), and with a pulse generator in a safe area (Figure 2.12). The remote reset input can also be controlled with an optional explosion-proof switch mounted in the top of the enclosure. See *Explosion-Proof Reset/Control Switch, page A-1*, for installation and wiring instructions.

The reset input, reset pulse, or local reset switch must be active for 3 seconds to clear the total. (The explosion-proof switch can also be used to view daily logs and to save the accumulated volume to memory without opening the enclosure. See *Explosion-Proof Reset/Control Switch, page 9*, for more information.)

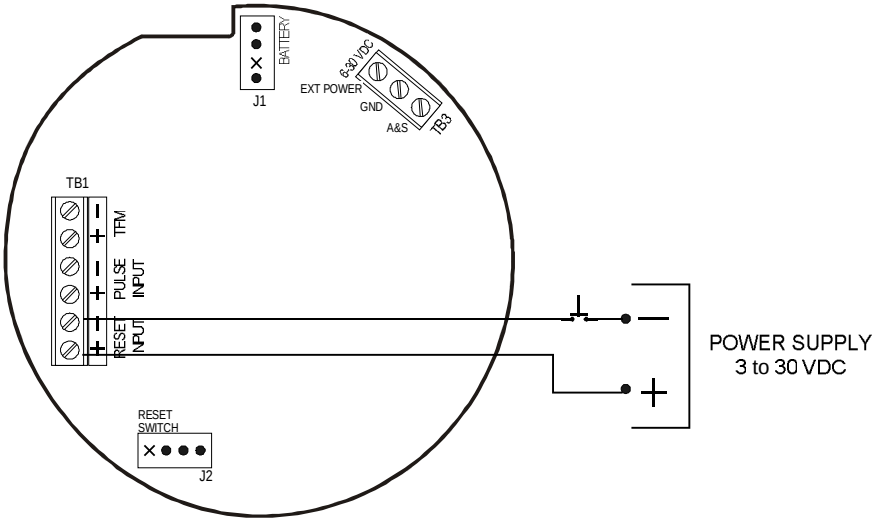

Figure 2.11—Reset input wiring (when power supply and reset switch are in a safe area)

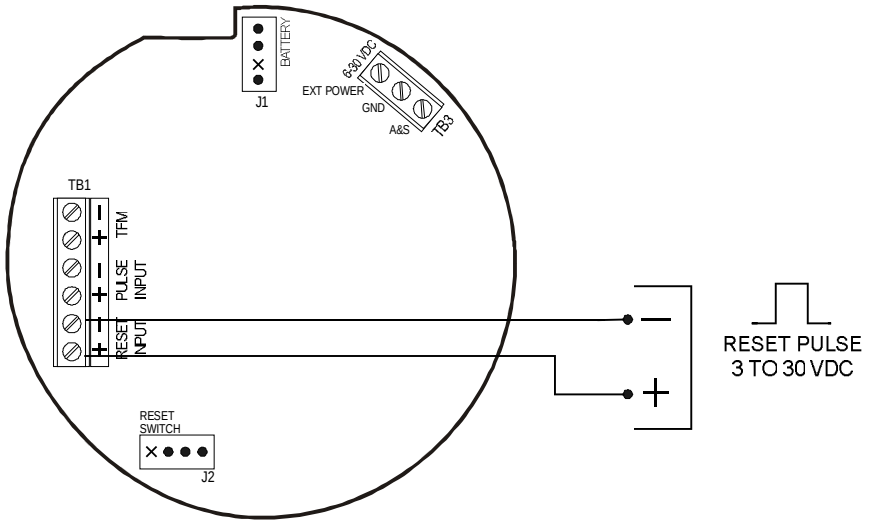

Figure 2.12—Reset pulse input wiring (when pulse generator is in a safe area)

Pulse Output

The pulse output is a solid-state relay. Each pulse represents a user-defined volume. Because the circuit is isolated, it can be used in conjunction with any other feature on the MC-III EXP. A two-conductor cable from the MC-III EXP to the remote location is required (Figure 2.13). The maximum current rating of the pulse output circuit is 60 mA at 30 VDC.

A Zener diode (Part No. 1.5KE56CA) must be installed for CE approval.

For information on configuring the pulse output with the keypad, see *Configuring the Pulse Output, page 37*. For information on configuring the pulse output with the interface software, see *Configuring Pulse Output, page 67*.

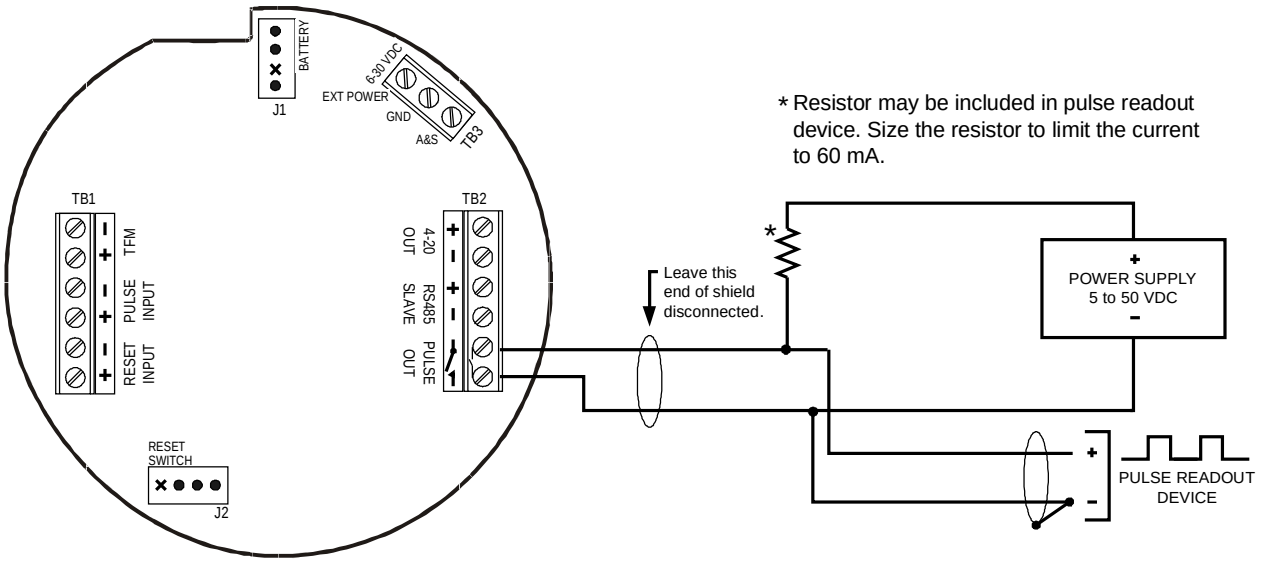

Figure 2.13—Pulse output wiring

Analog (4-20 mA) Rate Output

The 4-20 mA rate output provides a linear current output that represents flow rate. This output requires a two-conductor cable connected to an 8 to 30 VDC power supply (voltage required is dependent on loop resistance) and a current readout device located in the remote location. The 4-20 mA rate output current loop also powers the MC-III EXP. The internal battery (lithium or alkaline) provides a power supply backup to maintain timekeeping accuracy and to continue accumulating volume in the event that the 4-20 mA current loop fails.

Figure 2.14 shows the minimum required voltage to power the instrument for a given loop resistance. In addition, the mathematical relationship between loop voltage and load resistance is given. For example, if a power supply voltage of 24 volts is available to power the current loop, the maximum load resistance would be 800 ohms.

Caution: **The 4-20 mA rate output and the flowmeter frequency output circuits are not isolated from each other and cannot be used simultaneously. When the 4-20 mA output option is used, do not connect external power to TB3.**

For information on configuring the 4-20 mA rate output with the keypad, see *Configuring the Rate Display, page 34*. For information on configuring the 4-20 mA rate output with the interface software, see *4-20 mA Output, page 64*.

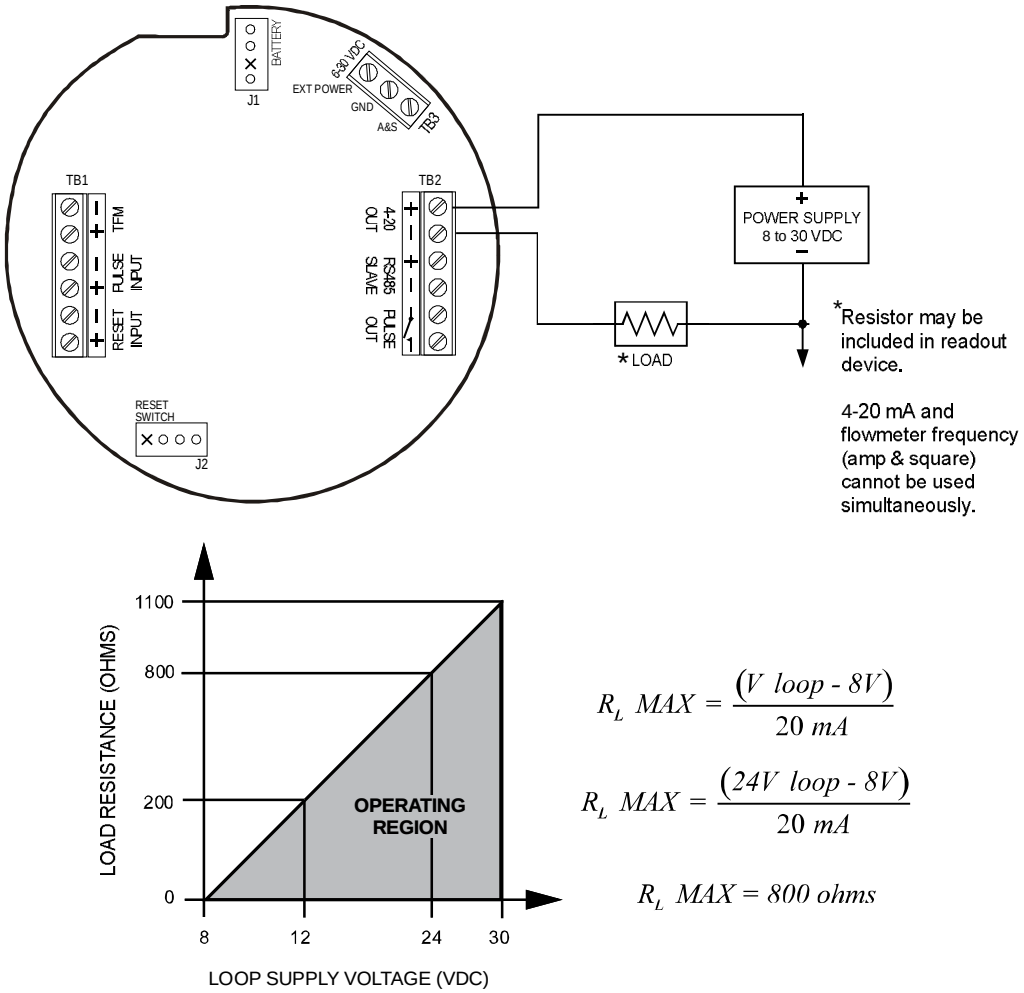

Figure 2.14—4-20 mA rate output wiring

Flowmeter Frequency Output

The flowmeter frequency (amp & square) output provides an open drain transistor output at the turbine meter frequency, which may be used to provide flow rate and/or total information to peripheral equipment. The output requires a two-conductor cable from the MC-III EXP to the remote frequency readout device requiring 50 mA or less and a 5 to 30 VDC power supply (Figure 2.15).

Caution: The flowmeter frequency output and 4-20 mA rate output are not isolated from each other and cannot be used simultaneously.

Caution: When using the flowmeter frequency output and powering the device from an external power supply, make sure both power supplies share a common negative (-) terminal or are totally isolated from each other.

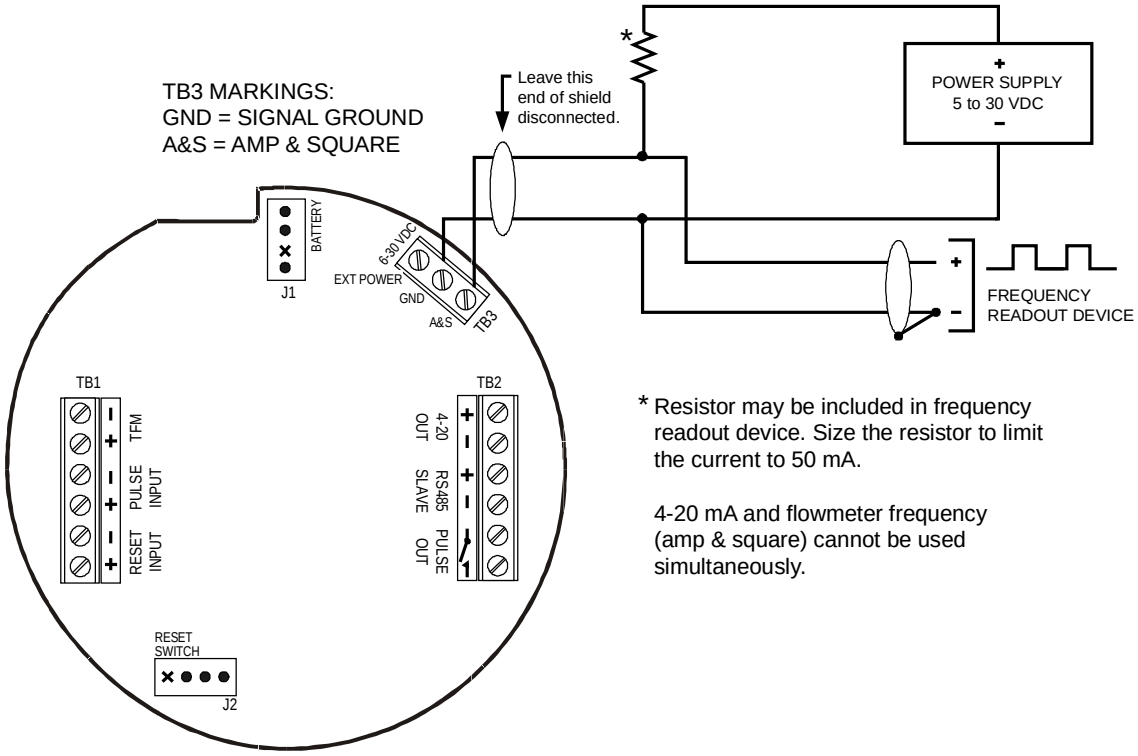

Figure 2.15—Flowmeter frequency (amp & square) output wiring

RS-485 Output

The RS-485 output is required for communication with the interface software. Wiring diagrams are provided for a permanent connection (Figure 2.16), as well as for temporary laptop connections using an RS-485 to RS-232 converter (Figure 2.17).

The RS-485 output may also be used to install an external communications adapter for connecting a laptop without opening the enclosure. See *Explosion-Proof Communications Adapter, page A-3*, and *USB Communications Adapter, page A-6*, for details.

Additionally, in a CSA-approved device, the RS-485 output is approved for intrinsically safe installations. An intrinsically safe installation requires an intrinsically safe barrier assembly with a conduit seal (*Figure 2.18, page 28*). In such installations, only the turbine flowmeter input may be used.

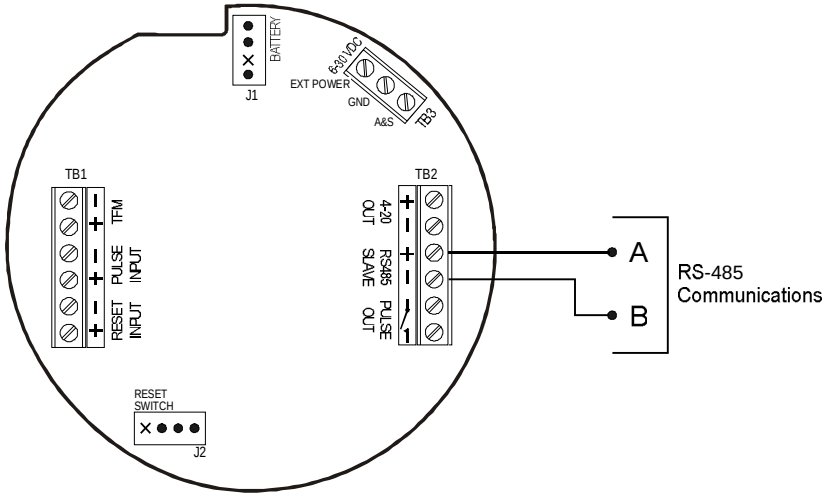

Figure 2.16—RS-485 output (permanent connection)

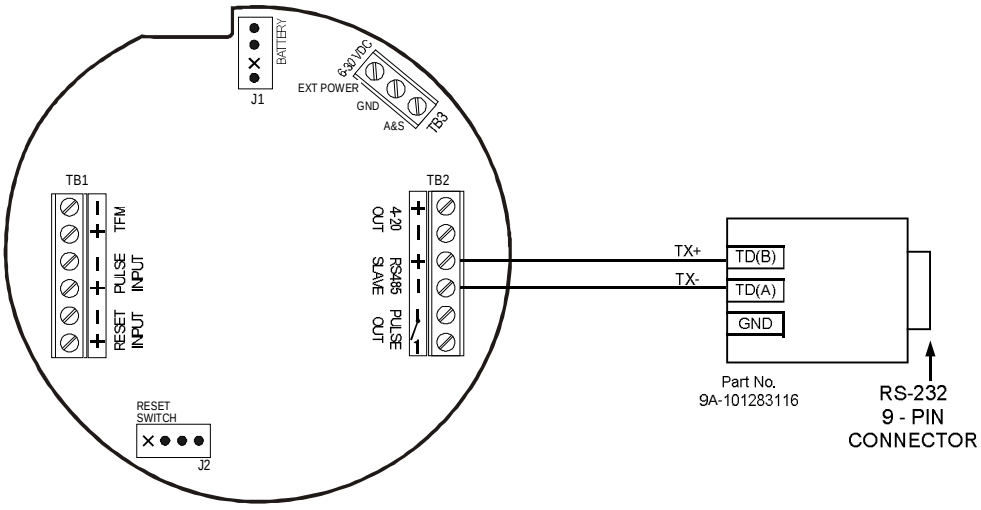

Figure 2.17—RS-485 output (connection to laptop with 9-pin converter)

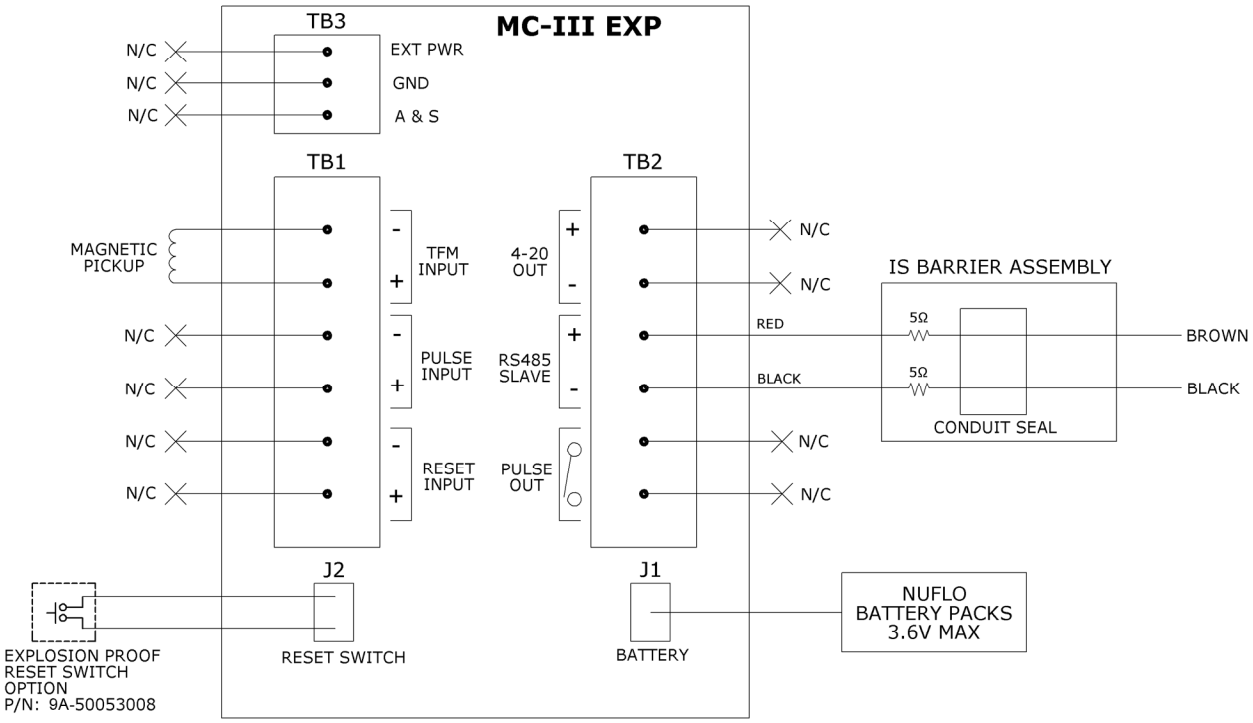

NOTES:

1. WHEN RS-485 OUTPUT IS USED AS SHOWN, ONLY THE TFM (TURBINE FLOWMETER) INPUT MAY BE USED. NO OTHER INPUT OR OUTPUT MAY BE USED.
2. TURBINE INPUT MUST BE SIMPLE INDUCTIVE PICKUP. EXTERNALLY POWERED DEVICES ARE NOT ALLOWED. THE PICKUP OUTPUT MUST BE LESS THAN 3.9V PEAK, 2.76 VRMS.

RS-485 OUTPUT ENTITY PARAMETERS

Vmax = 20V	Voc = 3.9V
Imax = 630mA	Isc= 390mA
C: = 0µF	Ca = 100µF
L: = 0µH	La = 249µH

Figure 2.18—Intrinsically safe RS-485 connection, based on control drawing 9A-50053010 (applicable to CSA-approved device only)

Section 3—Configuration and Operation via Keypad

Calibration of the MC-III™ EXP is a simple matter of entering necessary parameters into the instrument.

The process for calibrating the MC-III EXP depends on how the instrument will be used. The keypad can be used to calibrate the MC-III EXP for liquid or gas measurement using preprogrammed units, or for liquid measurement using a calculated divisor. When preprogrammed units are used, the MC-III EXP automatically calculates the divisor for volume calculation and the rate multiplier for flow rate calculation, making calibration quick and easy.

Important: For compensated gas measurement, or gas or liquid measurement requiring multipoint (2- to 12-point) linearization, calibration must be performed with the software user interface (see *Section 4, page 39***).**

Because the keypad is protected beneath the lid of the instrument, the enclosure must be opened to access the keypad. For this reason, it is important to calibrate the instrument before installing it in a hazardous area.

WARNING: To prevent ignition of hazardous atmospheres, do not remove the cover unless the area is void of combustible gas and vapors.

The following parameters can be configured using the six-button keypad on the front of the instrument:

- calibration factor and unit
- units of measurement for Total and Rate displays
- decimal position for Total and Rate displays
- input type and sensitivity level
- 4-20 mA output
- pulse output scale factor
- slave address
- baud rate

Entering a Calibration Factor

When the volume is to be expressed in barrels (BBL), gallons (GAL), liters (LIT), cubic meters (M^3), or cubic feet (CF), and the flow rate is to be expressed in barrels, gallons, liters, cubic meters or cubic feet per day, per hour, per minute, or per second, the MC-III EXP calculates the divisor automatically; only the turbine meter calibration factor is required.

When the volume is to be expressed in a unit other than the preprogrammed units listed above, a calculated divisor must be entered at the K-Factor prompt. See *Entering a Calculated Divisor, page 31*.

To Enter a Calibration Factor:

Enter the K-Factor menu.	Press K-FACTOR MENU.		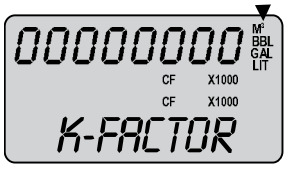
Select the unit of measure associated with the calibration factor (typically, pulses per gallon).	Press UP ARROW until the correct unit is displayed.		
Enter the decimal point position for the calibration factor.	Press LEFT ARROW to select the decimal point.		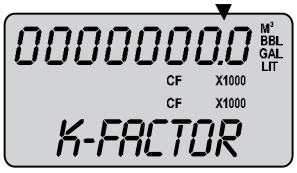
	Press UP ARROW to change the position of the decimal point.		
	Press LEFT ARROW to save the decimal point position and proceed with entering a calibration factor.		
Enter the calibration factor, starting with the last digit and entering digits right to left.	Press UP ARROW until the last digit of the calibration factor is displayed.		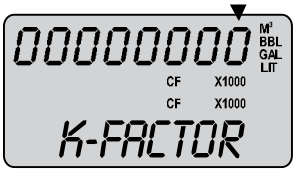
	Press LEFT ARROW to select the next digit to the left.		
	Repeat using UP and LEFT arrows to enter all remaining digits.		
	Press ENTER.		

The Input Sensitivity menu will appear following the entry of the calibration factor. See *Setting Input Type and Sensitivity, page 32*, for the input sensitivity configuration procedure.

Entering a Calculated Divisor

When registering the volume in units other than cubic meters, cubic feet, barrels, gallons, or liters, a calculated divisor must be entered in the K-Factor menu instead of the turbine meter calibration factor.

Important: When a calculated divisor is used, the units for both the volume display and the volume portion of the flow rate display should be set to USER (no units visible on the display).

The divisor and divisor decimal point must be determined, then entered in the K-Factor menu.

The formula for calculating the divisor is:

$$Divisor = FC \times CON$$

Where:

FC = meter factor in pulses per gallon (P/G)
CON = the conversion factor for number of gallons per unit volume of desired measure

To Enter a Calculated Divisor:

Enter the K-Factor menu.	Press K-FACTOR MENU.		
Select no unit of measure.	Press UP ARROW until no unit is displayed (as shown).		
Enter the decimal point position for the calculated divisor.	Press LEFT ARROW to select the decimal point. Press UP ARROW to change the position of the decimal point. Press LEFT ARROW to save the decimal point position and proceed with entering a calculated divisor.	  	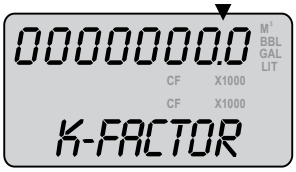
Enter the calculated divisor, starting with the last digit and entering digits right to left.	Press UP ARROW until the last digit of the calculated divisor is displayed. Press LEFT ARROW to select the next digit to the left. Repeat using UP and LEFT arrows to enter all remaining digits. Press ENTER.	  	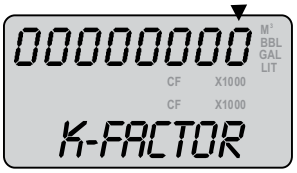

The Input Sensitivity menu prompt will appear immediately following the entry of the calibration factor. See *Setting Input Type and Sensitivity, page 32*, for the input sensitivity configuration procedure.

Setting Input Type and Sensitivity

The flowmeter signal can be obtained from a magnetic pickup or a pre-amplifier device.

The input sensitivity of the MC-III EXP is measured in millivolts (mV) peak-to-peak. This is the threshold value at which the circuitry responds to a signal. If the input signal is less than this value, the MC-III EXP will not count the electrical pulses as a valid turbine meter signal. If the input signal is equal to or greater than this value, the electrical pulses received at the input will be counted. Care must be taken to ensure that the input sensitivity is high enough to reject any electrical noise on the signal line, but not so high that flowmeter pulses are missed. The input sensitivity of the MC-III EXP may be set to low, medium, or high when the input will be provided by a turbine flowmeter.

If the input will be provided in the form of a pulse from a pre-amplifier or other device (rather than directly from a turbine flowmeter), the "Pulse In" (pulse input) setting in the Input Sensitivity menu should be selected.

See *Section 2, page 13,* for input wiring diagrams.

To Set Input Type and Sensitivity:

Enter the K-Factor menu.	Press K-FACTOR MENU.	K-FACTOR MENU	
Locate the input sensitivity setting.	Press ENTER, repeatedly if necessary, to bypass calibration factor.	ENTER SAVE	
If the input is the turbine meter, select a sensitivity setting: low, medium, or high. If the input is provided by a different device, such as a pre-amplifier, select "Pulse in" (for pulse input).	Press UP ARROW to select a sensitivity setting. Press ENTER. "SAVING" will appear in the bottom display.	TEST ENTER SAVE	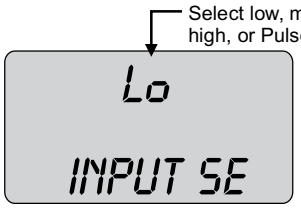

Configuring the Total Display

The Total display can be configured for measuring volume in any of five preprogrammed units, any preprogrammed unit times 1,000, or a user-defined unit.

Users can specify a decimal point position ranging from 0.1 to 0.0001 of a unit.

The device will display volumes up to 10,000,000, however, a maximum of eight digits (including decimals) are visible at a time. Therefore, once the volume (including decimals) grows beyond eight digits, digits on the leading edge of the value will be hidden from view. To increase visibility of the whole numbers, move the decimal one or more places to the right.

Important: Before enabling or disabling the "× 1000" unit option for displaying flow totals, clear the total display to zero. If the total is not cleared, the accumulated total display will be inaccurate. To clear the display, press LEFT ARROW (LOG) and ENTER (SAVE) keys simultaneously.

To Configure the Total Display:

Enter the Display menu.	Press DISPLAY MENU.	DISPLAY MENU	
Select the unit of measure in which volume will be displayed.	Press UP ARROW until the correct unit is displayed. Note—If a calculated divisor was entered, select user-defined (no units visible).	TEST	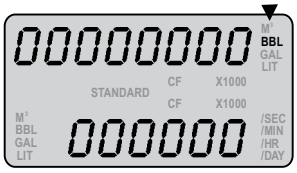
	To read the volume in terms of thousands of units (ex. 1.0 = 1,000 bbl), continue pressing UP ARROW until both the unit of choice and the X1000 option are displayed.	TEST	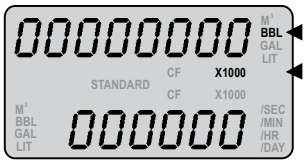
Enter the decimal point position.	Press LEFT ARROW three times, or until the decimal point in the Total display begins blinking.	LOG	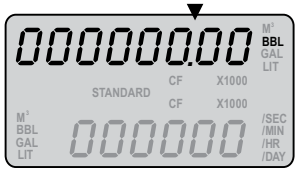
	Press UP ARROW to change the position of the decimal point.	TEST	
	Press ENTER. "SAVING" will appear in the bottom display.	ENTER SAVE	

Configuring the Rate Display

The Rate display comprises two parts: a volume unit and a time-base unit. The volume portion of the Rate display can be configured in one of five preprogrammed engineering units or in a user-defined unit (for use with a calculated divisor). To display the volume portion in multiples of 1,000 units, continue scrolling through the volume unit options until the ×1000 entry is displayed, along with the appropriate unit of measure.

The time-base portion of the Rate display can be configured in one of four preprogrammed engineering units: per day, per hour, per minute, or per second.

Users can specify a decimal point position, ranging from no decimal up to 0.001 of a unit.

To Configure the Rate Display:

Enter the Display menu.	Press DISPLAY MENU.	DISPLAY MENU	
Enter the volume factor used to express flow rate (Ex.: bbl in bbl/day).	Press LEFT ARROW. The volume unit of measure in the bottom portion of the LCD window should begin blinking. Press UP ARROW until the desired volume unit of measure is displayed. To read rate in terms of thousands of units, press UP ARROW until both the unit and "X1000" are displayed. Note—If a calculated divisor was entered, select user-defined (no units visible).	LOG TEST	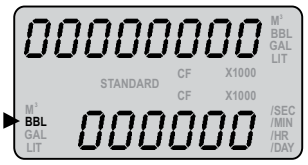
Enter the time-base factor used to express flow rate (Ex. /day in bbl/day).	Press LEFT ARROW. The time-base factor in the bottom portion of the LCD window should begin blinking. Press UP ARROW until the desired time-base factor is displayed.	LOG TEST	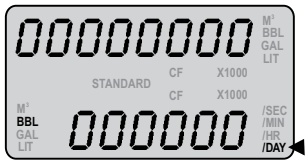
Enter the decimal point position.	Press LEFT ARROW twice, or until the decimal point in the Rate display begins blinking. Press UP ARROW to change the position of the decimal point. Press ENTER. "SAVING" will appear in the bottom display.	LOG TEST ENTER SAVE	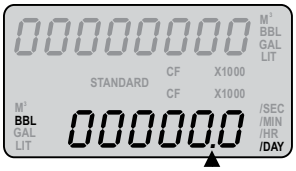

Caution: **An overrun error occurs when the number of digits in the flow rate value exceeds the display capacity of the device. To clear this error, reduce the number of decimal places (for example, display rate in tenths rather than hundredths), or enable the "× 1000" unit setting for the rate display, as described in the procedure above, to display rate in terms of thousands of units.**



Figure 3.1—Overrun error

Configuring the 4-20 mA Rate Output

Caution: Before performing any 4-20 mA configuration, ensure that all peripheral equipment connected to the 4-20 mA current loop is either disconnected or disabled. Configuring and testing the 4-20 mA output feature on the MC-III EXP with the peripheral equipment in operation may cause false alarms or erroneous operation of the peripheral device or associated equipment.

The MC-III EXP has a 4-20 mA output feature that represents flow rate. Zero and full-scale values can be configured to represent any flow rate range within the range of the flowmeter.

The low (or zero) setting is the flow rate value that will produce a 4-mA output. The high (or full-scale) setting is the flow rate value that will produce a 20-mA output. Typically, the high value is greater than the low value, as shown in Figure 3.2.

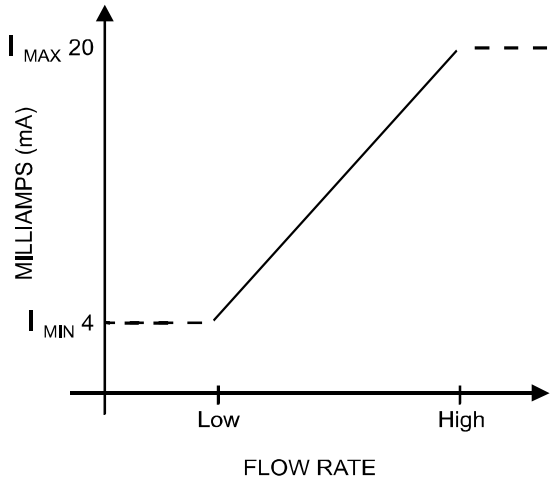

Figure 3.2—4-20 mA output configuration

See *Analog (4-20 mA) Rate Output, page 25,* for instructions on installing and wiring the 4-20 mA rate output.

Flow rates between the minimum and maximum rate setpoints will result in an output of current between 4 mA and 20 mA according to the following calculation:

$$I_{OUT} = \frac{[I_{MAX} - I_{MIN}]}{High - Low} \times [RATE_{CURR} - Low] + I_{MIN}$$

Where:

I_{OUT} = output current

I_{MAX} = maximum current output (20 mA)

I_{MIN} = minimum current output (4 mA)

High = programmed flow rate that produces a 20-mA output

Low = programmed flow rate that produces a 4-mA output

$RATE_{CURR}$ = flow rate

To Configure the 4-20 mA Output:

Enter the Output menu.	Press OUTPUT MENU.	OUTPUT MENU	
Enable or disable the 4-20 mA output.	Press UP ARROW to toggle output to "on" or "off". Press ENTER. If the 4-20 mA output is enabled, the LCD will display the "Low" flow rate and the decimal point in the numeric display will begin blinking.	TEST ENTER SAVE	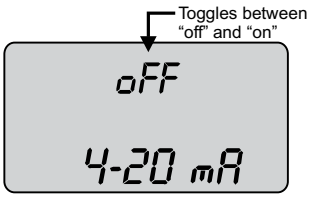
Enter the decimal point position for the "Low" flow rate. The words "4-20 mA LOW" should appear at the bottom of the LCD.	Press UP ARROW to change the position of the decimal point.	TEST	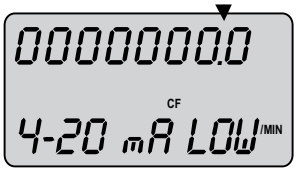
Enter the "Low" (4-mA) flow rate. Digits are entered from right to left.	Press LEFT ARROW until the rightmost digit in the top display begins blinking. Press UP ARROW to change the digit. Press LEFT ARROW to select the next digit to the left. Continue pressing UP ARROW and LEFT ARROW alternately to enter all remaining digits. Press ENTER. The LCD will display the "High" flow rate and the decimal point in the numeric display will begin blinking.	LOG TEST LOG ENTER SAVE	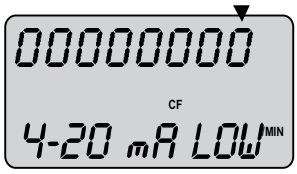
Enter the decimal point position for the "High" flow rate. The words "4-20 mA HIGH" should appear at the bottom of the LCD.	Press UP ARROW to change the position of the decimal point.	TEST	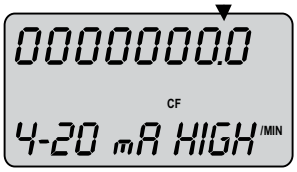
Enter the "High" (20-mA) flow rate. Digits are entered from right to left.	Press LEFT ARROW until the rightmost digit in the top display begins blinking. Press UP ARROW to change the digit. Press LEFT ARROW to select the next digit to the left. Continue pressing UP ARROW and LEFT ARROW alternately to enter all remaining digits. Press ENTER.	LOG TEST LOG ENTER SAVE	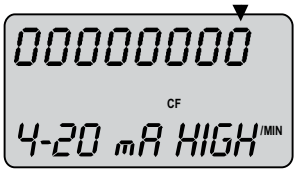

The Pulse Output menu prompt will appear immediately following the entry of 4-20 mA parameters. See *Configuring the Pulse Output, page 37*, for the pulse output configuration procedure.

Configuring the Pulse Output

The pulse output feature of the MC-III EXP is typically disabled to reduce current consumption. When the pulse output is not needed, Cameron recommends that this feature be disabled.

If the pulse output feature is required, the user will be prompted to enter a pulse output scale factor, which is the volume increment that will cause a pulse output to occur.

If the pulse output is configured via interface software instead of via the keypad Output menu, the user can also specify a pulse length (pulse width), which determines the length of each output pulse in milliseconds (ms). This parameter is configurable only with the interface software. See *Pulse Output, page 67,* for more information.

See *Pulse Output, page 24,* for instructions on installation and field wiring of the pulse output feature.

To Configure the Pulse Output:

Enter the Output menu.	Press OUTPUT MENU.	OUTPUT MENU	
Locate the Pulse Output setting.	Press ENTER repeatedly until the words “Pulse Output” appear in the lower display.	ENTER SAVE	
Enable or disable the pulse output.	Press UP ARROW to toggle output to “on” or “off”. Press ENTER. If the pulse output is enabled, the LCD will display “Pulse Output Scaler” and the decimal point in the numeric display will begin blinking.	TEST ENTER SAVE	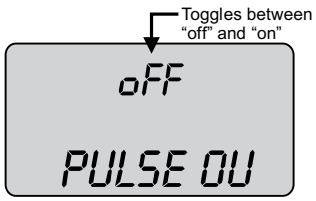
Enter the decimal point position for the output scale factor.	Press UP ARROW to change the position of the decimal point.	TEST	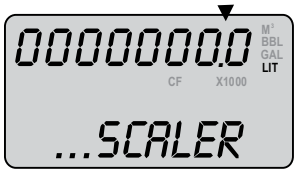
Enter the pulse output scale factor. Digits are entered from right to left.	Press LEFT ARROW until the rightmost digit in the top display begins blinking. Press UP ARROW to change the digit. Press LEFT ARROW to select the next digit to the left. Repeat using UP and LEFT arrows to enter all remaining digits. Press ENTER.	LOG TEST LOG ENTER SAVE	

The Slave Address menu prompt will appear immediately following the entry of pulse output parameters. See *Entering the Slave Address, page 38*, for information on entering the slave address.

Entering the Slave Address

The slave address is a setting used in Modbus® communications. It is a number that ranges from 1 to 65535, excluding 252 to 255 and 64764. If the Modbus® request message contains the matching address, the device will respond to the request. In network arrangements, the device must have a unique slave address. For more information about Modbus® communications, refer to the protocol manual section. If Modbus® communications are not used, leave the slave address at the factory setting (1).

To Enter the Slave Address:

Enter the Output menu.	Press OUTPUT MENU.	OUTPUT MENU	
Locate the Slave Address setting.	Press ENTER until the words "Slave Address" appear in the lower display. The rightmost digit in the top display will begin blinking.	ENTER SAVE	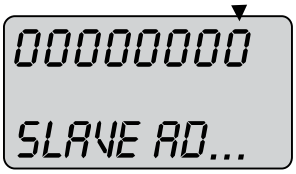
Enter the slave address. (range: 1 to 65535, excluding 252 to 255 and 64764)	Press UP ARROW until the correct digit is displayed. Then press LEFT ARROW to select the next digit to the left. Repeat using UP and LEFT arrows to enter all remaining digits. Press ENTER.	TEST LOG ENTER SAVE	

The Baud Rate menu prompt will appear immediately following the entry of the slave address. See *Entering the Baud Rate* below for the baud rate entry procedure.

Entering the Baud Rate

The baud rate is the number of bits per second that are on the serial port. This setting must match the setting of the master device polling the MC-III EXP or the serial port. This only applies to the Modbus® communications; if Modbus® communications are not used, leave the baud rate at the factory setting (9600).

To Enter the Baud Rate:

Enter the Output menu.	Press OUTPUT MENU.	OUTPUT MENU	
Locate the Baud Rate setting.	Press ENTER repeatedly until the words "Baud Rate" appear in the lower display.	ENTER SAVE	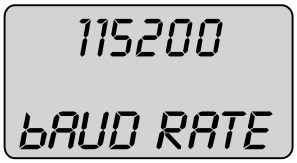
Enter the baud rate.	Press UP ARROW until the correct baud rate is displayed. Press ENTER. "SAVING" will appear in the bottom display.	TEST ENTER SAVE	

Section 4—Configuration and Operation via Software

The MC-III™ interface software provides easy access to all configuration parameters and is the quickest way to configure the device. While basic parameters can be configured with the keypad (see Section 3), the interface software is the only means of accessing every configurable parameter. For example, multipoint calibration for liquid or gas measurement and gas volume correction parameters for measuring gas in standard cubic feet are configurable only with the interface software.

Table 4.1, page 49, provides a quick reference for configuration methods.

Installing the Software

The MC-III interface software is stored on a CD that is shipped with each instrument, and it installs directly onto a PC or laptop. To install the interface software on a computer, perform the following steps:

1. Place the MC-III CD in your CD-ROM drive. The MC-III install screen will load automatically.
2. Click "Install MC-III" on the introductory screen.
3. Click on "Next" to initiate the installation, and follow the instructions on the screen. An MC-III icon (Figure 4.1) will appear on the desktop of the user's PC or laptop when installation is complete.

To access the interface software, click on the MC-III icon on your desktop or go the Start menu and select Programs>NuFlo>MC-III 2.1.0>MC-III 2.1.0.



Figure 4.1—MC-III desktop icon

User Documentation

Click the Help menu in the task bar at the top of the Welcome screen (*Figure 4.2, page 40*) to access documentation for installing, configuring, and operating the MC-III EXP flow analyzer. This documentation includes:

- a "read me" file for general reference (includes contact information for technical assistance)
- an electronic copy of the user manual
- an electronic copy of the quick-start guide for installing and configuring the MC-III EXP
- a COM troubleshooting guide for addressing communications errors (this guide will automatically display on screen when a communication error is detected)

Connecting the MC-III to a Computer

Before attempting to run the interface software, verify that the Scanner is connected to a computer with an RS-485 to RS-232 converter or an RS-485 to USB converter.

- See *Figure 2.17, page 27,* for converter wiring instructions.
- See *Explosion-Proof Communications Adapter, page A-3,* for instructions on installing and wiring an RS-485 communications adapter.
- See *USB Communications Adapter, page A-6,* for instructions on installing and wiring the USB communications adapter. A USB driver supplied on the MC-III software installation CD must be installed on the computer before the USB adapter will be operational. A customer-supplied universal USB cable is required to connect the NuFlo USB adapter to a computer.

Running the Software

Once the software is installed and the computer is connected to the MC-III, the user may proceed with running the software and configuring the device.

To connect to the MC-III device via software, perform the following steps:

1. Click on the NuFlo MC-III icon on the desktop, or select Start>Programs>NuFlo>MC-III 2.1.0>MC-III 2.1.0. The Welcome screen (Figure 4.2) will appear and a Select COM Port window will prompt the user to select the communications port to be used to connect with the MC-III EXP (Figure 4.2).
2. Select a port from the dropdown list and click "OK." If the NuFlo™ USB communications adapter is in use, the COM port will appear as "NuFlo USB Adapter." The software will attempt to connect with the MC-III EXP. This automatic launch feature is referred to as an "express connect."
3. If the internal time and date programmed into the instrument differs from the time and date displayed on the computer by more than 60 seconds, the software will prompt the user to synchronize the instrument time/date to match the computer time/date (*Figure 4.3, page 41*). This ensures that the instrument displays correct time, regardless of time zone differences.

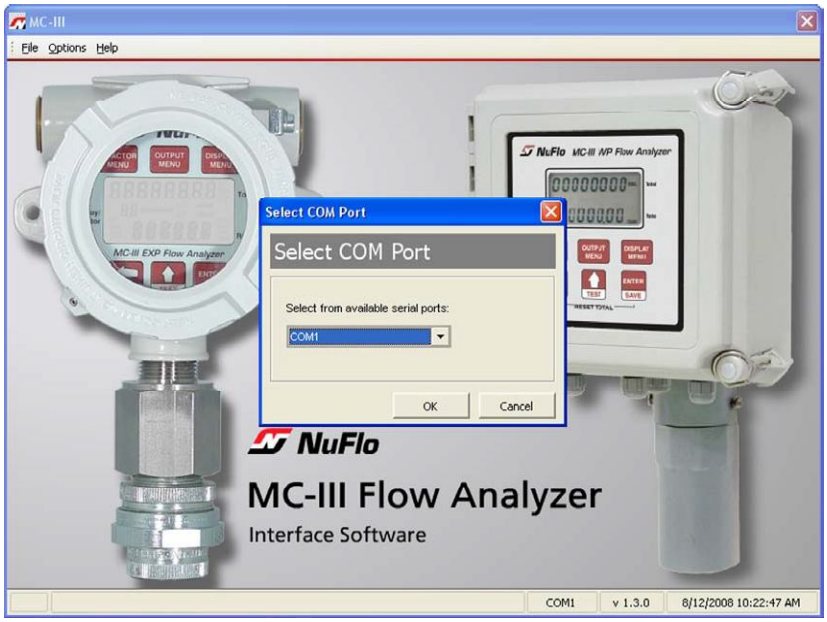

Figure 4.2—Select COM Port window

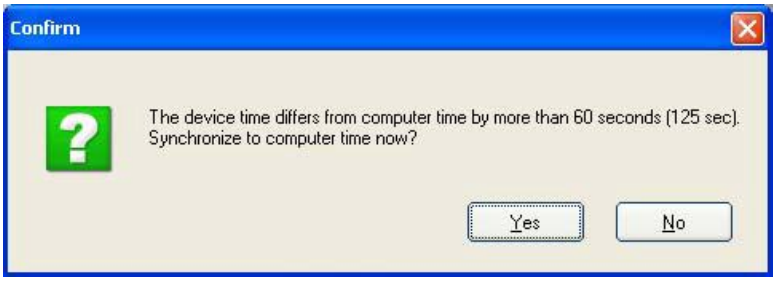

Figure 4.3—Prompt for authorizing time and date synchronization

The time difference setting used to generate a synchronize prompt is user-configurable. For more information, see *General Options, page B-1*.

Automating Functions on Software Startup

When the software connects with the instrument, the Device Autorun Options screen appears (Figure 4.4). From this screen, users can configure the instrument, download logs, or upload previously saved configuration settings.

A checkbox at the bottom of the Device Autorun Options screen allows the user to bypass the Device Autorun Options screen and perform a selected function each time the software connects to the instrument.

Example: To download all logs on connection, select Download all logs from the Device Autorun Options screen and check the "Always do..." checkbox. Each time the software computer connects to the instrument, the software will bypass the Device Autorun Options screen, open the Flow Archive screen, and download all logs. See *Section 5, page 73,* for more information on flow logs.

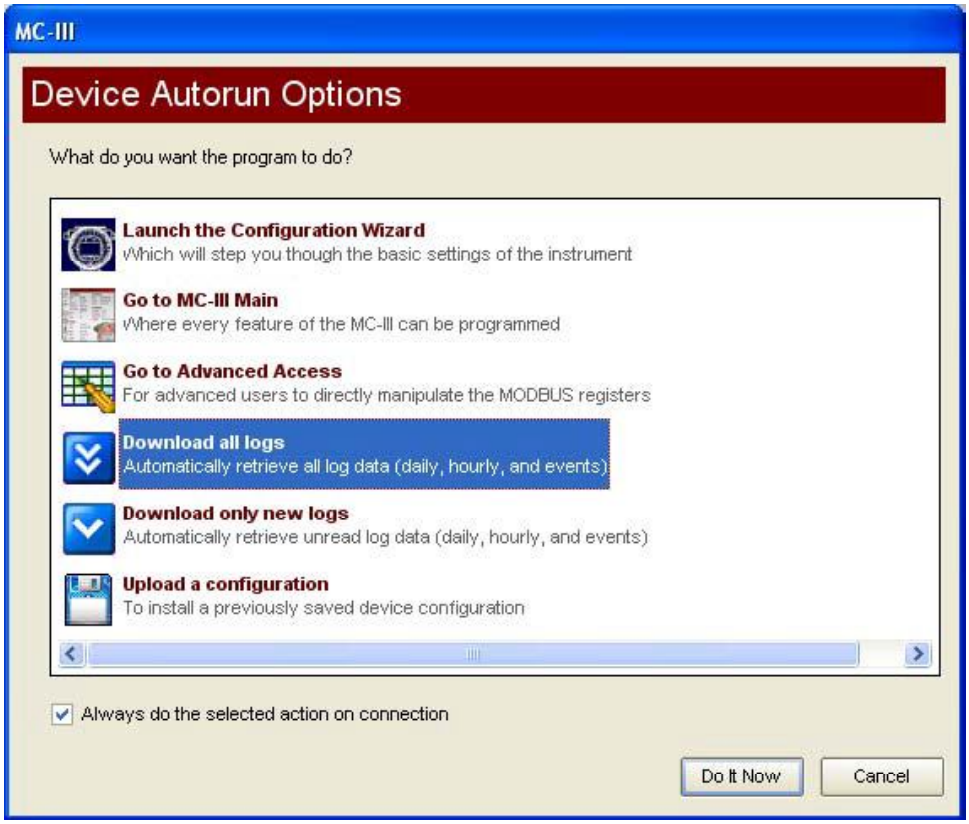

Figure 4.4—Device Autorun Options screen

Changing Autorun Settings

To change an autorun setting —that is, to initiate an autorun action, to terminate an autorun action, or to change to a different autorun action—without exiting to the Welcome screen, choose Options/Program Options from the menu bar and select Autorun from the dropdown list (Figure 4.5).

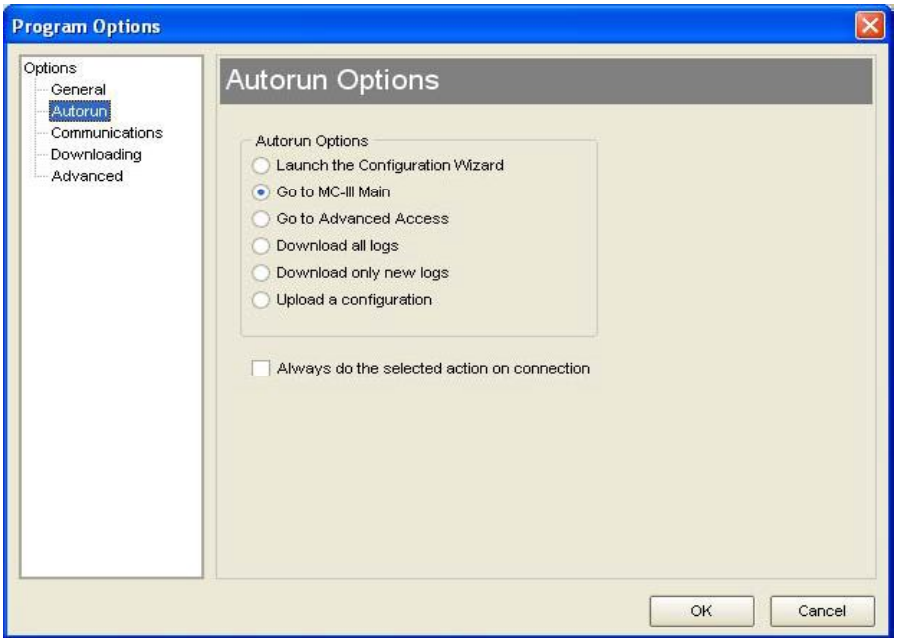

Figure 4.5—Options/Program Options screen for changing autorun settings

Express Connect Option

By default, the MC-III EXP interface software automatically attempts to connect to the instrument when a user clicks on the desktop application icon. For more information on disabling the "express connect" feature and changing communications options, see *Express Connect Option, page B-4*.

Canceling Express Connect

To temporarily cancel the "express connect" function without exiting the software program, click in the LCD area of the device on the Welcome screen or choose File>Cancel Express Connect from the menu bar (*Figure 4.6, page 43*). The software will stop all attempts to connect to the device. The "express connect" function will be restored when the user exits the program and attempts to re-open the software.

To reattempt a connection to the device after canceling the "express connect" function, click the LCD on the Welcome screen again, or choose File>Express Connect from the menu bar.

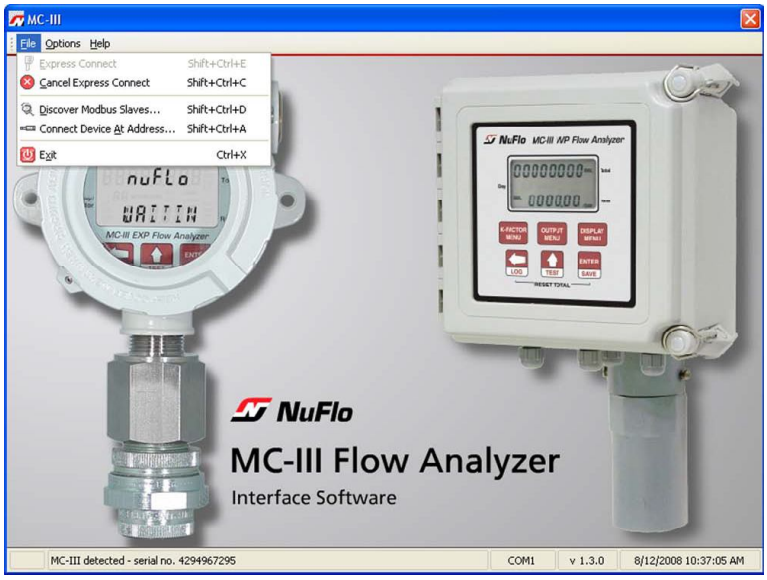

Figure 4.6—Cancel Express Connect option

Changing the Communications Port

The computer will attempt to connect to the MC-III EXP via the port that the user selects the first time he connects to the instrument. However, if a network dictates that the computer connect through another communications port (actual or virtual), the user must specify the appropriate COM port. To change the COM port setting, click on Options>Select COM Port (Figure 4.7), and select the appropriate COM port from the list of ports detected.



Figure 4.7—COM port selection menu

Software Connection in Multi-Device Network

In most cases, the automatic launch (or "express connect") feature is a convenient time-saver. However, if multiple devices are daisy-chained together in a network, this feature can interfere with the user's ability to connect to a specific device. The MC-III allows the user to temporarily disable the "express connect" feature and query the system for all connected devices. From the resulting list of devices, the user can then connect to the appropriate slave address.

To select a device from a network of instruments, perform the following:

1. From the Welcome screen, choose File>Cancel Express Connect (*Figure 4.6, page 43*).
2. Click File>Discover Modbus® Slaves.
3. Enter a range of addresses you want to search (Figure 4.8).
4. Enter the baud rate established for network communications.
5. Adjust the time-out setting, if necessary.
6. Click "Search." The software will scan all addresses specified and display all instruments connected.
7. Click on the appropriate address to connect to a device.

Note: In daisy-chain configurations, verify that each device has a unique slave address.

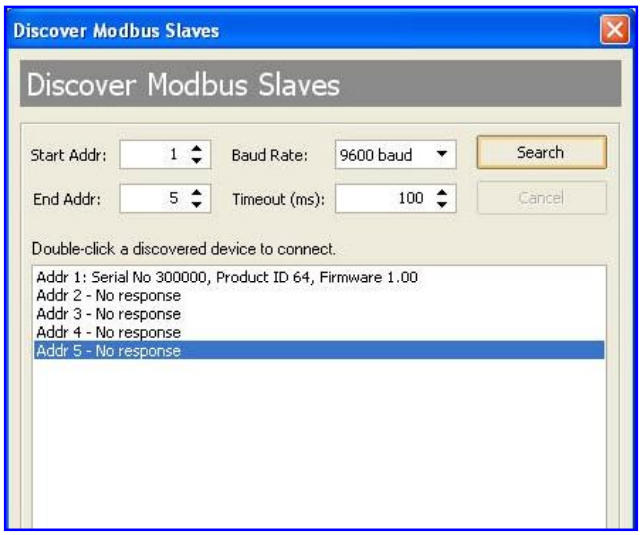

Figure 4.8—Automatic detection of all connected devices

A user who knows the address of a specific device may also connect to it by clicking File>Connect Device at Address (Figure 4.9).



Figure 4.9—Slave address selection screen

Setting Log Download Preferences

The MC-III EXP automatically saves daily flow logs on the contract hour, and hourly flow logs around the clock. The instrument also automatically creates an event record each time a user change is made. After downloading these logs from the instrument, the instrument saves the data in a file. By default, the logs are saved as .csv files.

The file format of the auto-save flow log and event log files is user-configurable. Users can configure the instrument to download the auto-save flow and event logs as Excel (.xls) files by selecting Options>Program Options>Downloading from the menu bar (Figure 4.10).

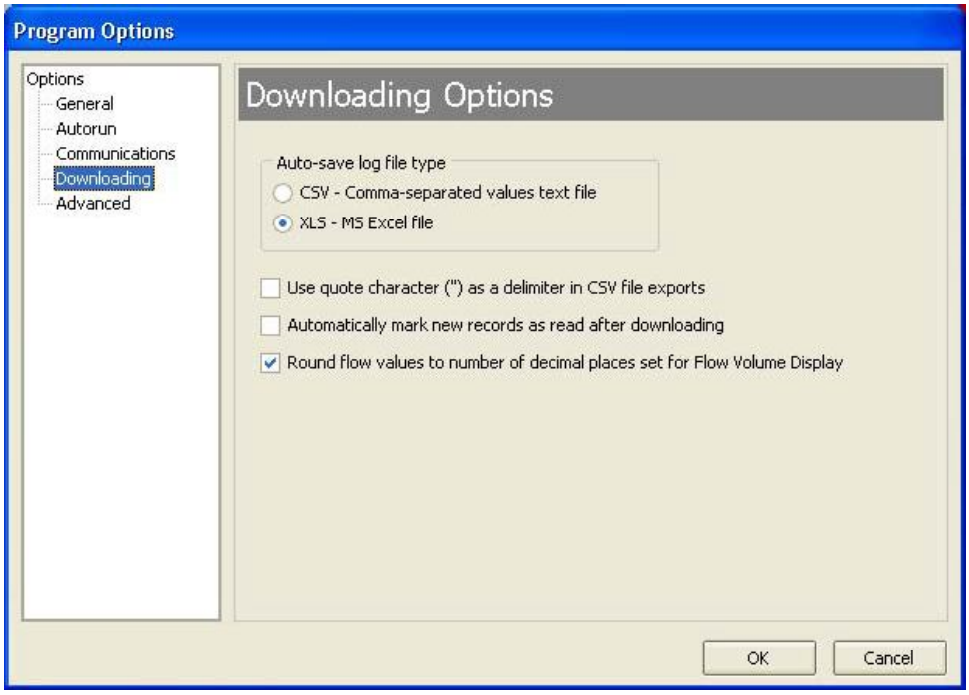

Figure 4.10—Log file type selection

Configuring the MC-III EXP

The MC-III EXP offers three methods for configuring parameters:

- The "Configuration Wizard" (Figure 4.11) condenses the configuration process into nine easy-to-follow steps (compensated gas measurement and multipoint linearization are not supported in the wizard).
- The MC-III Main screen (*Figure 4.12, page 47*) gives users complete access to all configuration parameters.
- The Advanced screen (*Figure 4.13, page 47*) provides access to Modbus® registers that can be modified to change configuration parameters (recommended only for system configurators and host programmers).

If the desired configuration settings have been saved previously, the configuration file can also be uploaded, eliminating the need to re-input configuration data. See *Saving and Uploading Configuration Files, page 69*, for details.

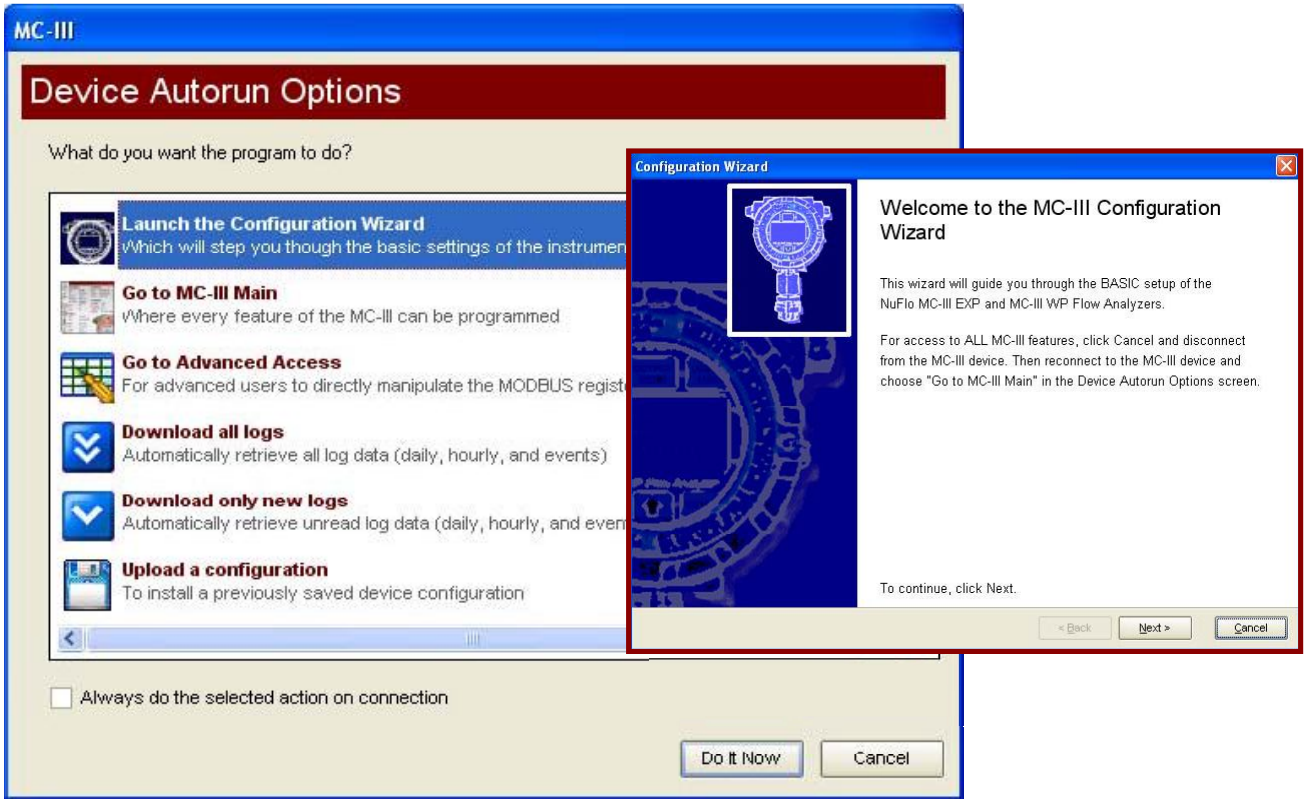

Figure 4.11—Configuration Wizard (for novice users)

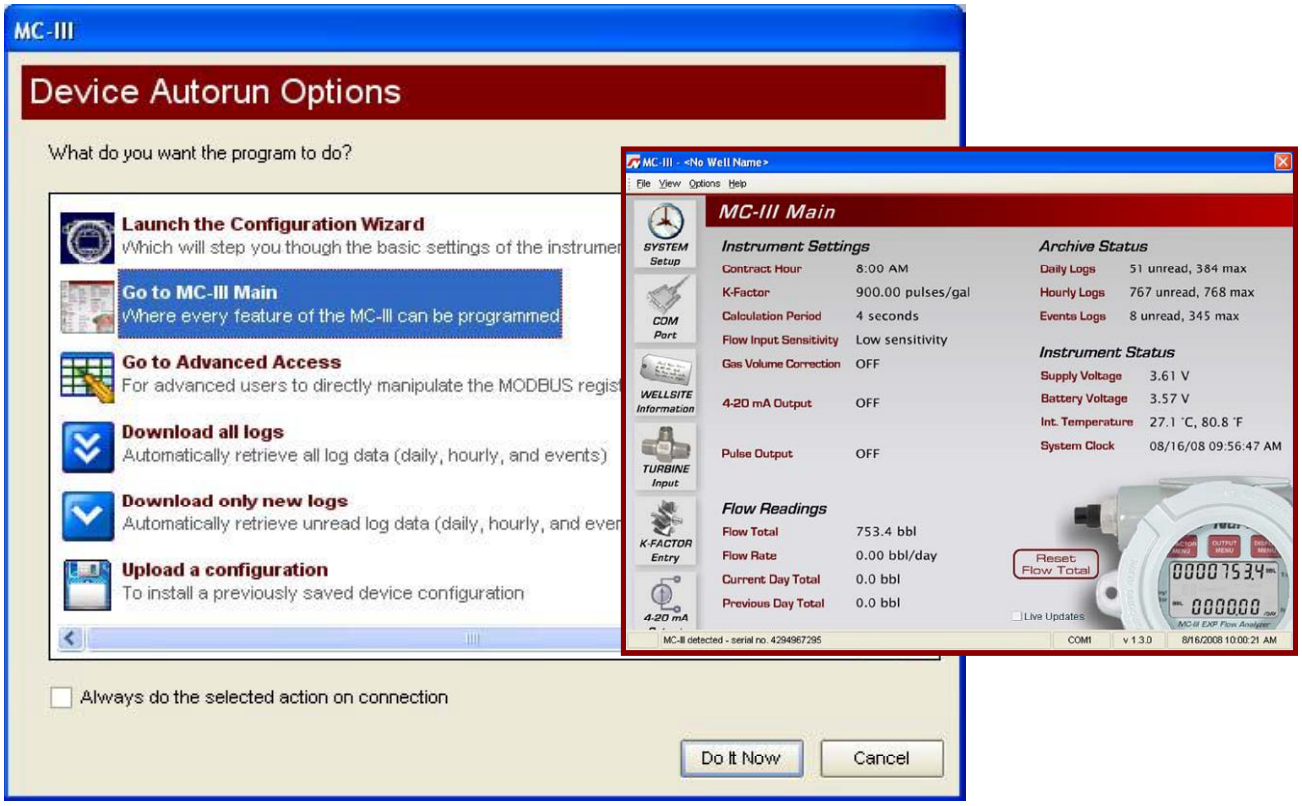

Figure 4.12—MC-III Main configuration option for complete access to configurable parameters

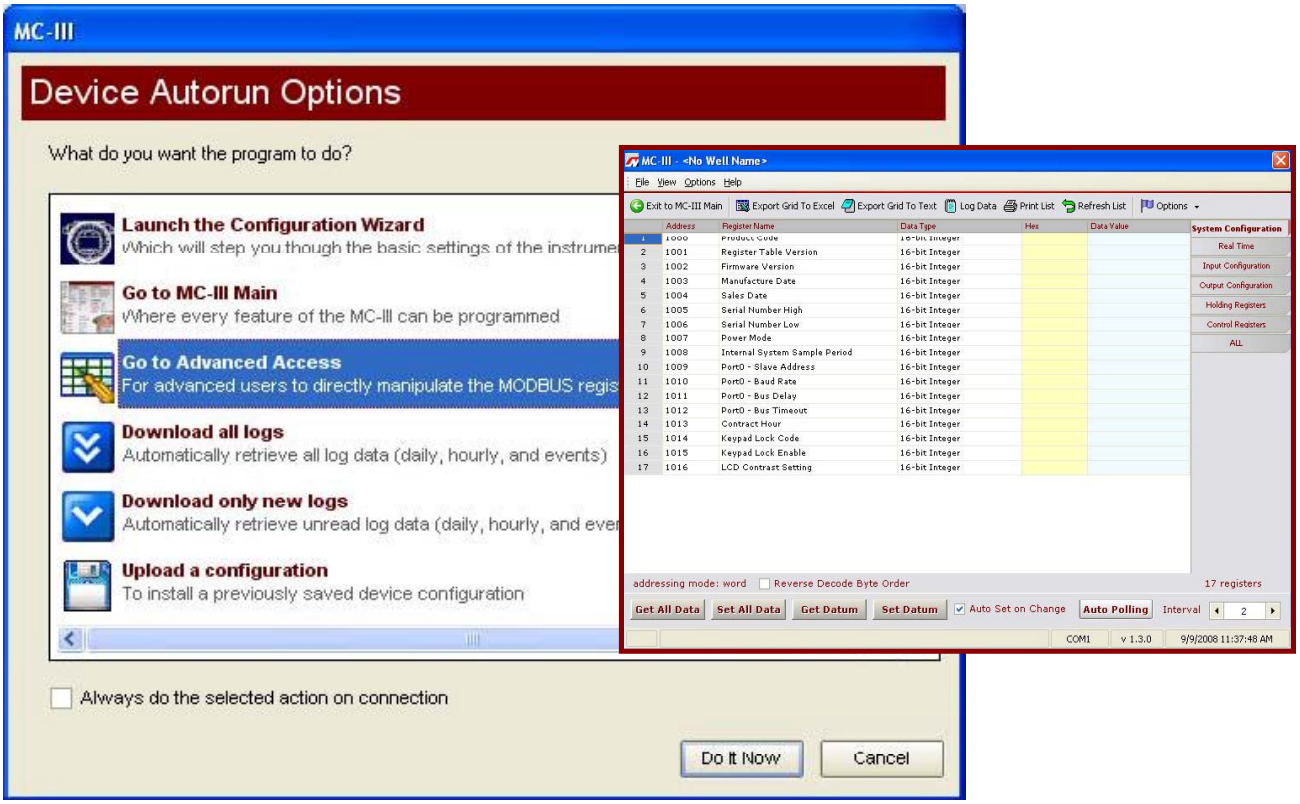

Figure 4.13—Advanced Access configuration option for system configurators and host programmers

Configuration Wizard

The Configuration Wizard is ideal for first-time users who want to perform a basic calibration for liquid or gas measurement. By following the instructions on nine screens, even a first-time user can successfully configure the MC-III EXP.

See *Table 4.1, page 49*, for a list of settings that are configurable with the keypad, the software Configuration Wizard, and the software MC-III Main Screen.

Important: The Configuration Wizard does not allow multipoint calibration or gas volume correction. To select these parameters, the user must access the MC-III Main screen.

Caution: Do not use the Configuration Wizard to change individual settings. When the Configuration Wizard is used, system default settings are restored before the new settings entered in the Calibration Wizard are written to the program. Previous configuration settings are saved automatically in C:\NuFlo log data\MC-III\Config Backup Files.

Using the Pencil Tool

The data entry fields in the Configuration Wizard are highly intuitive, and most can be completed by clicking in the field and entering new data or selecting a checkbox. For data fields that require the user to enter a value, such as a K-factor, and designate a decimal position, a pencil icon provides a link to a data-entry window.

To enter a new value, click on the pencil icon (Figure 4.14). A new window will appear, allowing the user to enter a new value, and designate the appropriate decimal position using a slide bar. This method ensures that the decimal point setting and data-entry resolution displayed in the software and on the instrument LCD correlate.

This tool is used to enter the calibration factor, flow rates for 4-20 mA output, and the scale factor for pulse output.

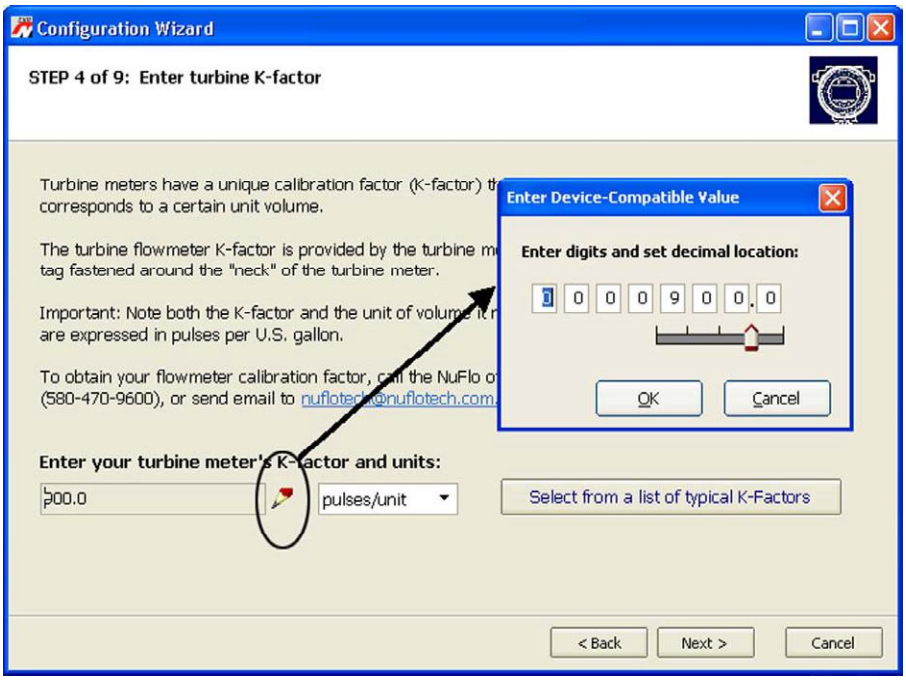

Figure 4.14—Pencil tool icon and data-entry window

Table 4.1—Menus for Configuring Parameters

Configurable Parameter	Instrument Keypad	Configuration Wizard	Menu Screen (accessed from MC-III Main)	For information, see…
Well Name	—	Step 1	Wellsite Information	*page 57*
LCD Contrast	—	—	System Setup	*page 54*
Security Setup	—	—	System Setup	*page 55*
Contract Hour	—	Step 2	System Setup	*page 54*
Volume Display (units, decimal location)	Yes	Step 5	Turbine Input	*page 58*
Rate Display (units, decimal location)	Yes	Step 5	Turbine Input	*page 59*
Input Type	Yes	Step 3	Turbine Input	*page 59*
Input Sensitivity	Yes	—	Turbine Input	*page 59*
Input Cut-off Thresholds	—	—	Turbine Input	*page 59*
Calculation Period (seconds)	—	—	Turbine Input	*page 59*
K-Factor	Yes	Step 4	K-Factor Entry	*page 60*
Multipoint K-Factor	—	—	K-Factor Entry	*page 60*
Gas Volume Correction	—	—	K-Factor Entry	*page 62*
4-20 mA Output	Yes	Step 6	4-20 mA Output	*page 65*
Pulse Output	Yes	Step 7	Pulse Output	*page 67*
Slave Address	Yes	Step 8	COM Port	*page 55*
Baud Rate	Yes	Step 8	COM Port	*page 56*
Bus Delay	—	—	COM Port	*page 57*
Bus Timeout	—	—	COM Port	*page 57*

MC-III Main Screen

The MC-III Main menu screen (Figure 4.15) is the configuration hub of the MC-III EXP. From the Main screen, users can

- review all current instrument settings and flow readings
- check the log archive and instrument status
- access all submenus for changing configurable parameters
- reset the total to zero

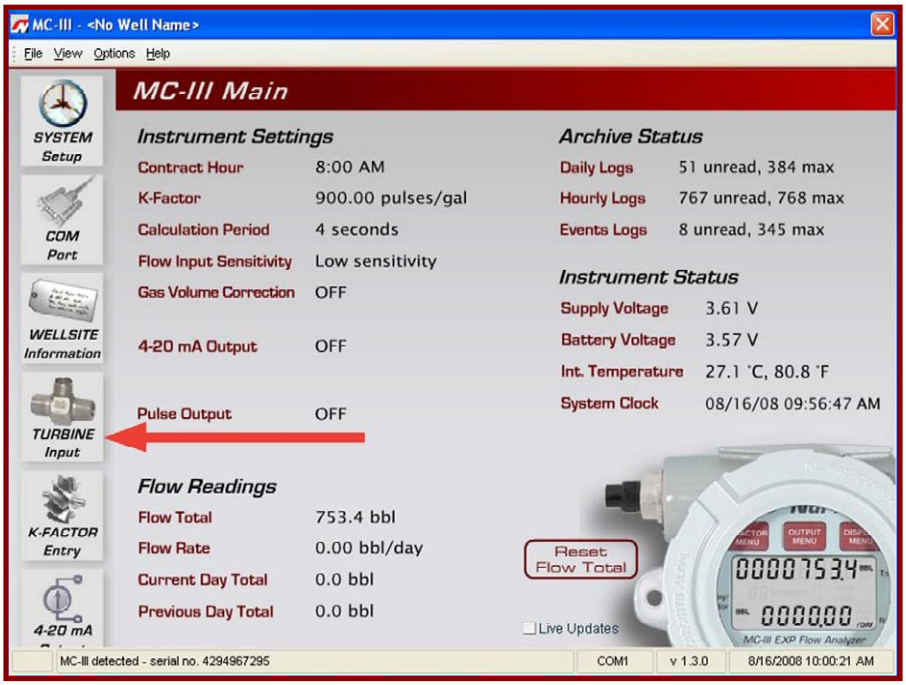

Figure 4.15—MC-III Main screen provides direct access to all menu functions using the scrolling menu bar at the left side of the screen.

Data Display and Updates

Each time the software polls the instrument, a small icon appears briefly in the lower left corner of the screen. If the "Live Updates" checkbox in the lower right corner of the screen is checked, the instrument settings and the LCD displays will automatically update with each poll.

"Live Updates" Checkbox

The "Live Updates" option is enabled by default. However, in the event that slow communication speeds are used or the system times out frequently, the user can uncheck the "Live Updates" checkbox and periodically query the system by clicking on the LCD graphic on the Main screen.

Reset Flow Total Button

The flow total can be reset to zero at any time by clicking on the "Reset Flow Total" button.

Scroll Bar

A scroll bar at the left side of the screen (Figure 4.15) gives the user easy access to any of seven configuration menus and two log archive screens (see page 52 and page 53). Using these menus, the user can change all configurable parameters of the instrument. Once the instrument has been configured, the Main screen access should always be used for changing individual parameters while retaining all other configuration settings.

Buttons and Tools

Apply and OK Buttons

Changing parameters on a submenu screen involves selecting the proper screen from the scroll bar, selecting information from dropdown menus or entering data in data fields, and saving the data using the "Apply" or "OK" button. "Apply" allows the user to apply the changes without leaving the submenu screen. "OK" allows the user to apply the changes and returns the user to the Main screen.

Refresh and Cancel Buttons

To update the display of settings on any submenu screen by forcing a reread of configured parameters, press the "Refresh" button. The "Refresh" button clears any entry that has not been applied, therefore, pressing "Refresh" is also a convenient way to erase an incorrect entry. A "Cancel" button allows the user to close out of a submenu screen without saving new settings and returns the user to the Main screen.

Pencil Tool for Data Entry

The data-entry fields in the MC-III Main sub-menu screens are highly intuitive, and most can be completed by clicking in the field and entering new data, or selecting a checkbox. For data fields that require the user to enter a value, such as a K-factor, and designate a decimal position, a pencil icon provides a link to a data-entry window.

To enter a new value, click on the pencil icon (Figure 4.16). A new window will appear, allowing you to enter a new value, and designate the appropriate decimal position using a slide bar. This method ensures that the decimal point setting and data-entry resolution displayed in the software and on the instrument LCD correlate.

This tool is used to enter the calibration factor, flow rates for 4-20 mA output, and the scale factor for pulse output.

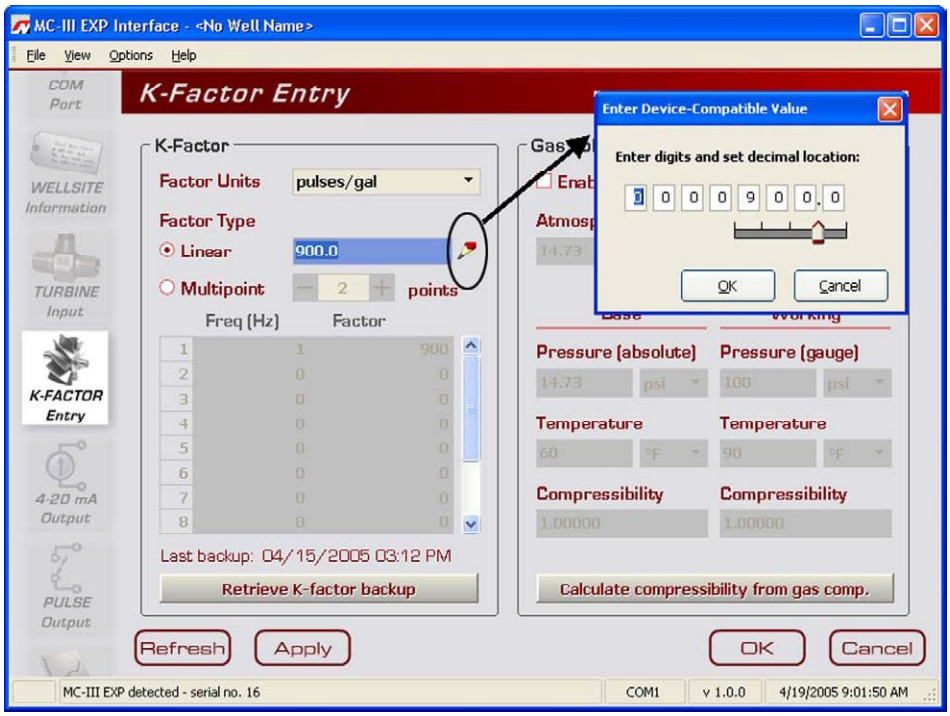

Figure 4.16—Pencil tool icon and data-entry window

Configuration Submenus (See Scroll Bar on MC-III Main Screen)

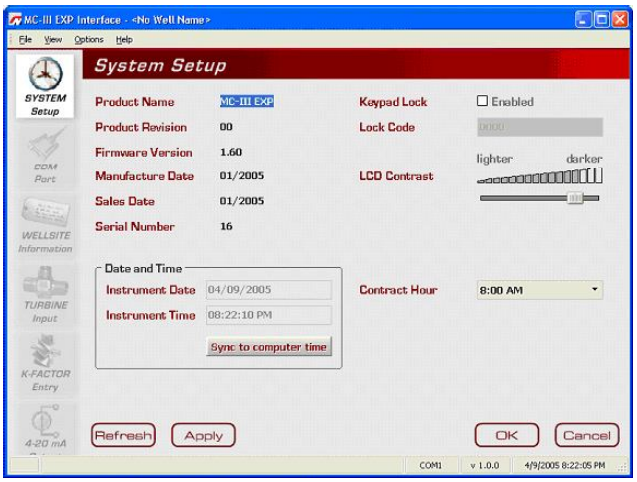

System Setup

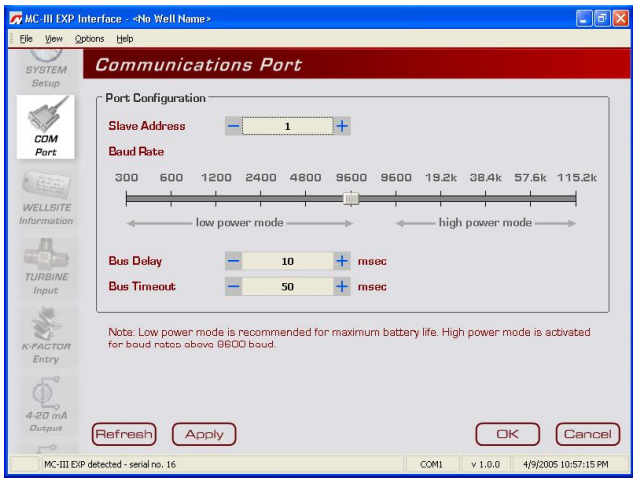

Communications Port



Wellsite Information

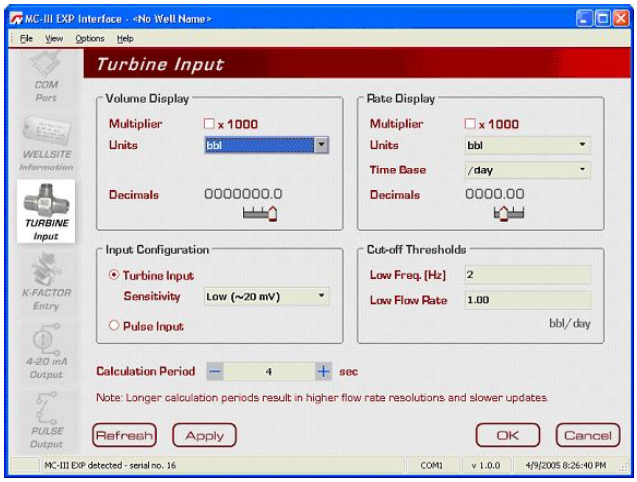

Turbine Input

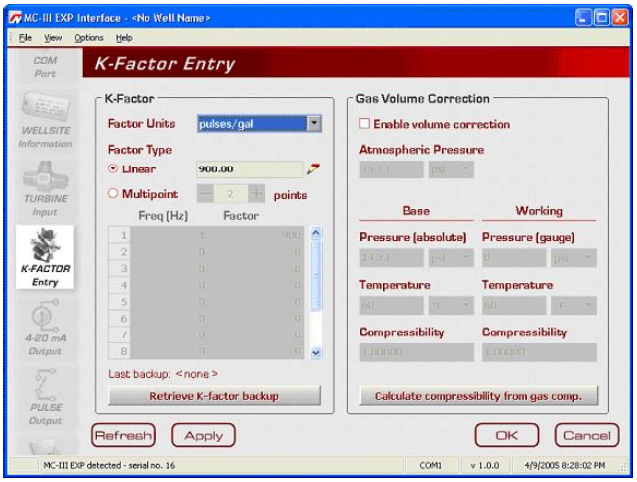

K-Factor Entry

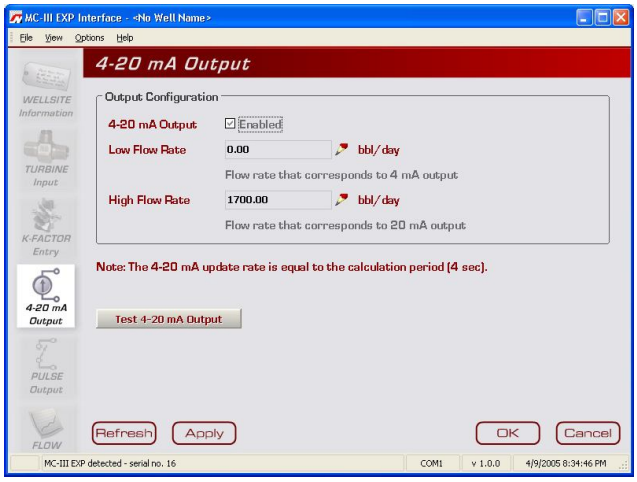

4-20 mA Output

Configuration Submenus (cont'd)

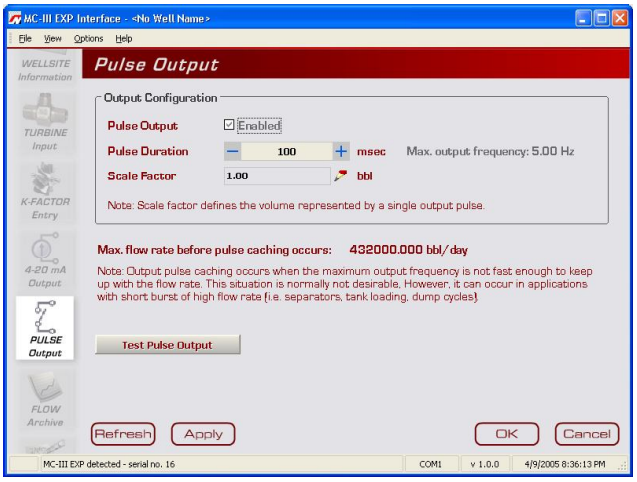

Pulse Output

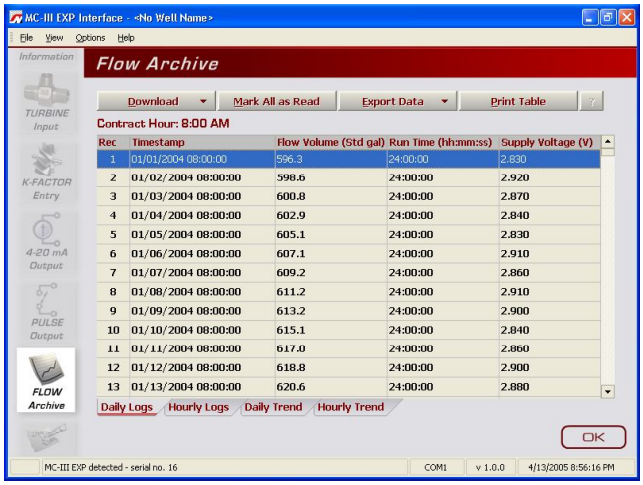

Flow Archive

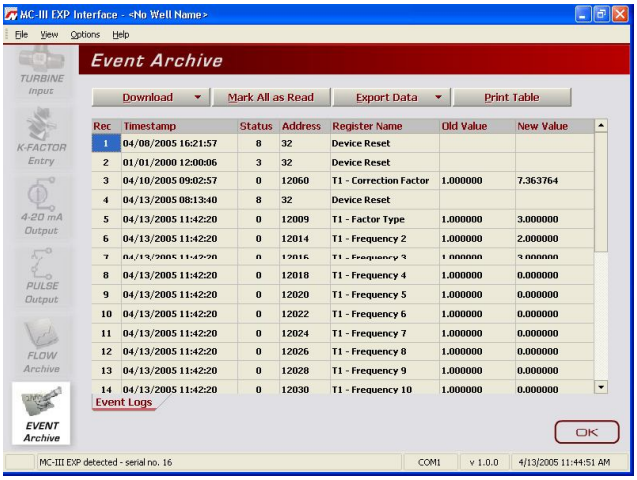

Event Archive

System Setup

The first of the submenus on the Main screen scroll bar—System Setup—allows users to adjust time/date, set the desired contract hour, enable or disable the password-protected security option, and adjust the LCD contrast (Figure 4.17).

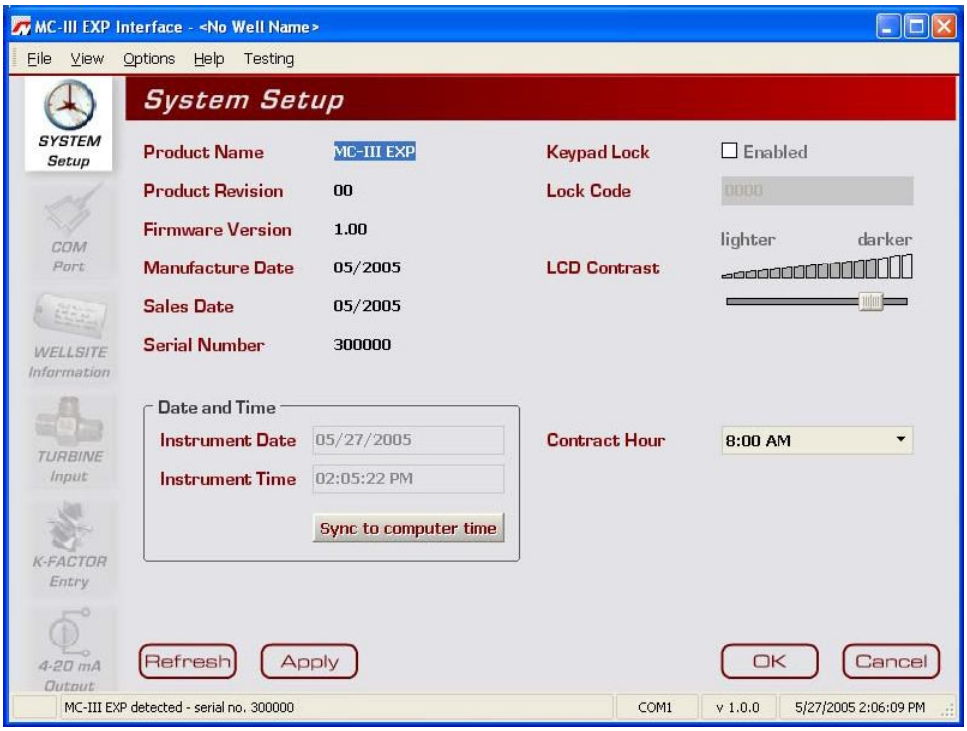

Figure 4.17—System Setup screen

Time/Date Synchronization

The MC-III EXP includes a real-time clock for timekeeping and log time stamps. Upon connecting with the instrument, the interface software prompts the user to synchronize the instrument time and date with the time and date displayed on the computer if the time difference exceeds 60 seconds. To change the clock synchronization threshold to a value other than 60 seconds, see *General Options, page B-1*.

A user can synchronize the instrument and computer clocks at any time by clicking the "Sync to Computer Time" button on the System Setup screen.

Contract Hour

Hourly flow totals are logged in the archive on the hour. The contract hour determines the exact time when the daily flow total is logged. The contract hour is easily adjusted by selecting the appropriate hour from the dropdown list on the System Setup screen.

LCD Contrast Adjustment

LCD contrast is temperature-dependent and may require adjustment for optimum readout visibility. A slide bar allows users to quickly adjust the contrast of the LCD.

Security Setup

Setting a keypad security code will prevent unauthorized personnel from altering calibration data or resetting totals, and the security function is recommended to preserve data integrity of the system. The MC-III EXP's keypad security feature is disabled at the factory.

To enable the security protection, check the "Keypad Lock" checkbox on the System Setup screen, and enter a four-digit lock code in the field below the checkbox. (Do not use "0000.") The security feature will be activated the next time a user attempts to access the keypad.

Firmware Version Number

As firmware is upgraded, firmware version numbers change. The firmware version number shown may assist technical support personnel in troubleshooting an operational issue.

Serial Number

The serial number of your MC-III EXP can be used to track the history of your unit to include warranty status.

Communications Port

The Communications Port screen (Figure 4.18) allows users to change the settings that are required for Modbus® communication.

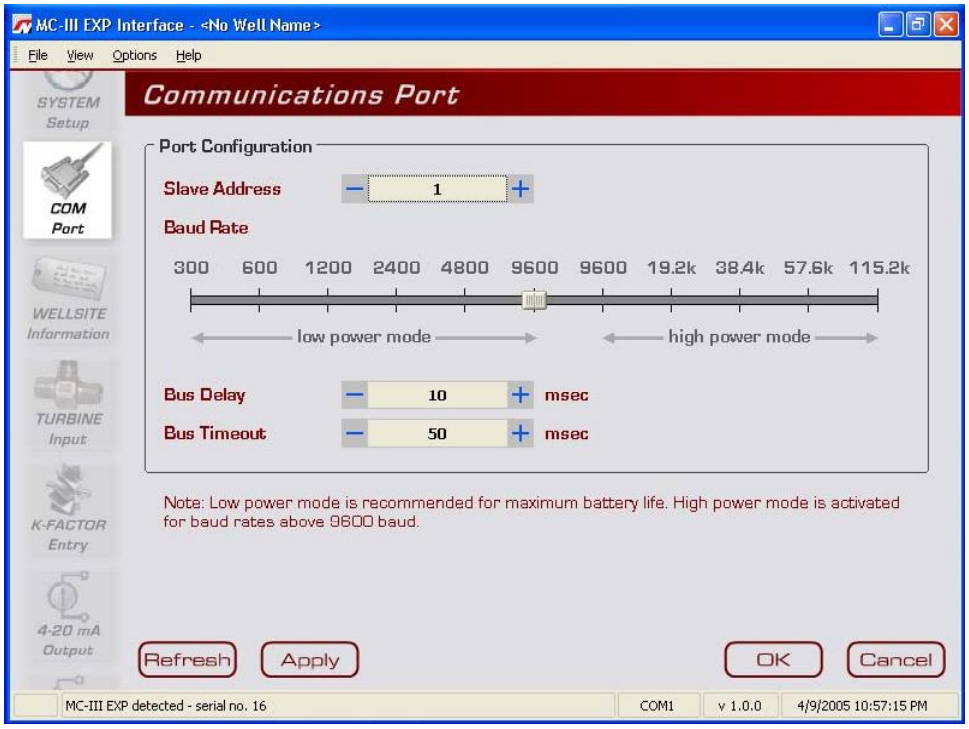

Figure 4.18—Communications Port screen

Slave Address

The slave address allows the MC-III EXP to communicate with other devices via Modbus®. It is a number that ranges from 1 to 65535, excluding 252 to 255 and 64764. If a Modbus® request message contains the matching slave address, the device will respond to the request. In network arrangements, the slave device must have a unique address. For more information about Modbus® communications, refer to the protocol manual section.

To change the slave address, select a number using the "plus" and "minus" buttons on the screen, or using the page-up and page-down keys on your computer keyboard. If Modbus® communication is not used, leave the slave address at the factory setting (1).

Baud Rate

The baud rate is the number of bits per second that are on the serial port. Baud rates supported by the MC-III EXP range from 300 to 115.2K. This setting must match the setting of the master device polling the MC-III EXP or the serial port. This only applies to the Modbus® communications; if Modbus® is not used, set the baud rate to 9600.

To change the baud rate, slide the selector bar to the appropriate setting. The default setting is 9600 baud. Note that the 9600 baud rate is available in both the low-power and high-power modes. When the instrument is powered by batteries alone, the low-power mode is recommended.

Auto-Negotiate Option

When connected devices are capable of switching baud rates automatically or when devices are directly connected to an MC-III EXP, a user may configure the MC-III interface to automatically negotiate the fastest baud rate during device connection. This "negotiated" baud rate does not replace the configured baud rate, but rather provides a temporary boost of baud rate while the computer is connected to the device for faster downloads. After the software disconnects, the device reverts to the configured baud rate.

By default, this function is disabled. To enable automatic baud rate negotiation on device connect, choose Options/Program Options from the menu bar, select Communications from the dropdown options list, check the "Attempt auto-negotiation..." checkbox, and click "OK" (Figure 4.19). To initiate an immediate search for the fastest baud rate without exiting tto the Welcome screen, check the "Enable auto-negotiated baud rate" checkbox, click the "Test Now" button to the right of the checkbox, and click "Yes" at the prompt in the Confirm dialog box. See also *Auto-Negotiate Option, page B-4*.

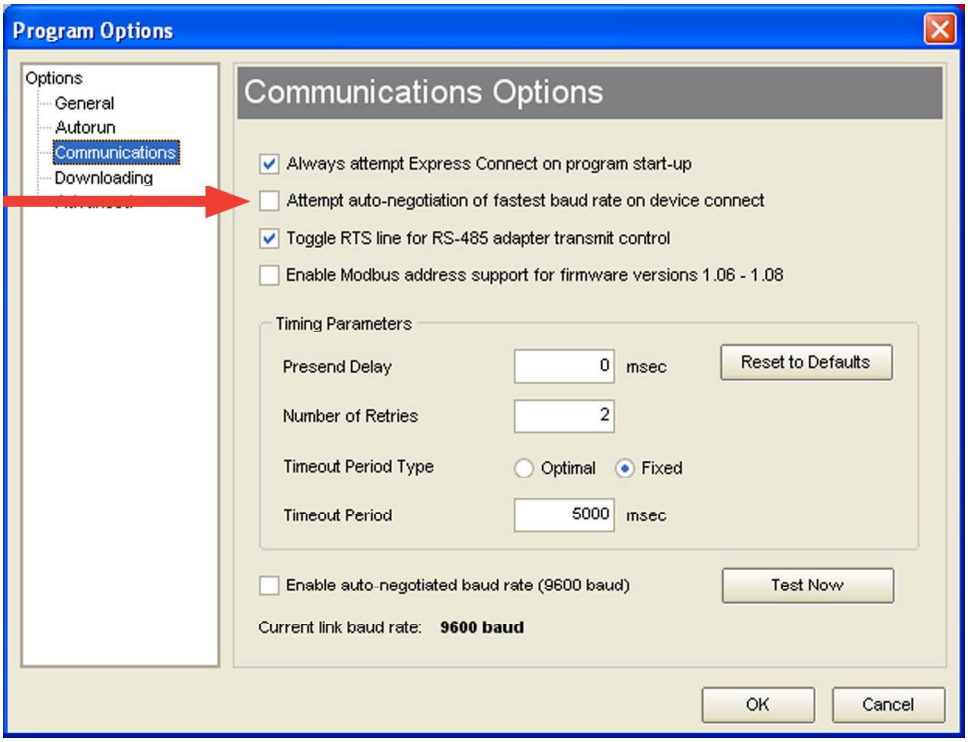

Figure 4.19—Communications Options screen

Bus Delay

Bus delay is the amount of time (in milliseconds) that passes before the MC-III EXP attempts to take control of the RS-485 bus and transmit a message back to the requesting device. The MC-III EXP responds very quickly to incoming Modbus® requests—in some cases, too quickly. A configurable delay allows the user to control this response time. A setting of 10 ms is normally sufficient, but may require adjustment when the MC-III EXP is communicating with a radio or other end device that responds more slowly.

Bus Timeout

Bus timeout is the amount of time (in milliseconds) that must pass to cause the MC-III EXP to reset its internal Modbus® message handler. The default value of 50 ms is normally sufficient.

Software Communication Options

The default timing parameters in the MC-III EXP support communication with most radios and Modbus® devices. However, if the MC-III EXP is used with a device that has a very slow response time, it may be necessary to adjust the timing parameters to enhance performance. For information about these parameters, see *Timing Parameters, page B-4*.

Wellsite Information

The Wellsite Information screen (Figure 4.20) allows users to enter information that distinguishes the wellsite, such as company name, well name, and site location. While most of the fields on this screen are optional, a well name should be assigned.

The well name (limited to 20 characters in length) will also serve as the name of the folder where flow logs generated by the MC-III software will be archived. If a well name is not entered on this screen, logs will be saved in a folder titled "NO_WELLNAME."



Figure 4.20—Wellsite Information screen

Turbine Input

The Turbine Input screen (Figure 4.21) allows users to configure the displays for volume and rate, select the type of input to be used (turbine input or pulse input), determine cut-off thresholds for measuring flow, and determine the display update frequency.

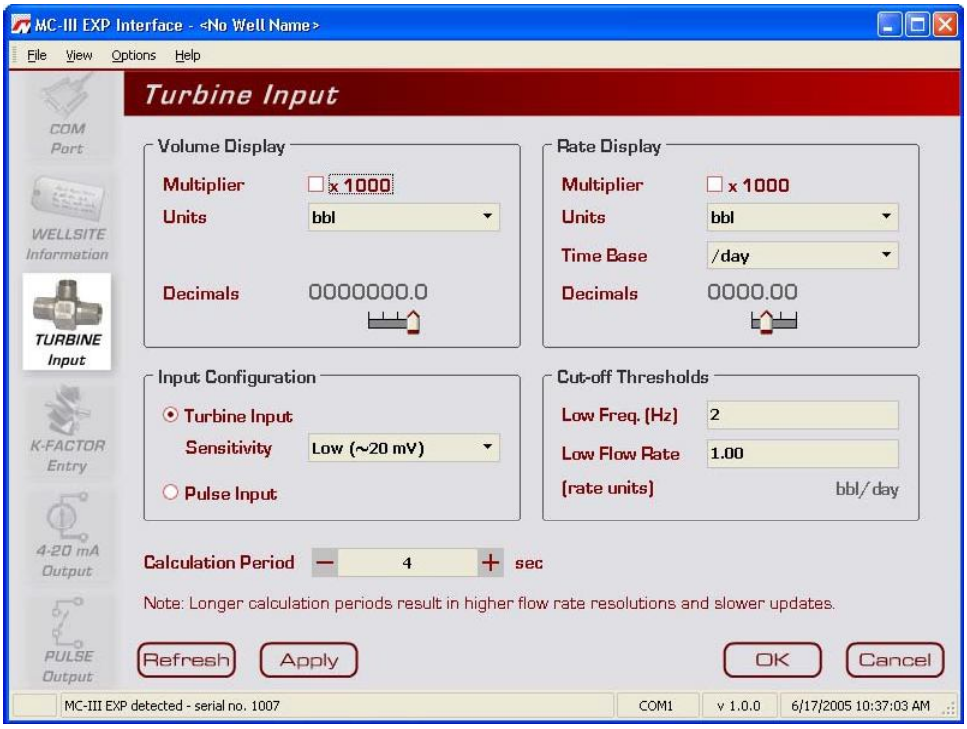

Figure 4.21—Turbine Input screen

Volume Display

The Volume display can be configured to display totals in one of five preprogrammed engineering units or in a user-defined unit (for use with a calculated divisor).

Important: **If volume is to be measured in user-defined units, the K-Factor unit must also be entered as "pulses per unit." For more information, see** *Entering a Calculated Divisor, page 31*.

To display the volume in multiples of 1,000 units, check the "Multiplier" checkbox.

The device will display volumes up to 10,000,000, however, a maximum of eight digits (including decimals) are visible at a time. Therefore, once the volume (including decimals) grows beyond eight digits, digits on the leading edge of the value will be hidden from view. To increase visibility of the whole numbers, move the decimal one or more places to the right.

Important: **Before enabling or disabling the "× 1000" unit option for displaying flow totals, clear the total display to zero. If the total is not cleared, the accumulated total displayed will represent a combination of two different units and will not provide an accurate flow reading.**

Rate Display

The Rate display comprises two parts: a volume unit and a time-base unit. The volume portion of the Rate display can be configured in one of five preprogrammed engineering units or in a user-defined unit (for use with a calculated divisor). To display the volume portion in multiples of 1,000 units, check the "Multiplier" checkbox.

The time-base portion of the Rate display can be configured in one of four preprogrammed engineering units: per day, per hour, per minute, or per second. Users can specify decimal point position, from no decimal up to 0.001 of a unit, using the slide bar on the Turbine Input screen.

Important: **If the volume portion of the Rate display is to be measured in user-defined units, the K-Factor unit must also be entered as "pulses per unit." For more information, see** *Entering a Calculated Divisor, page 31*.

Caution: **An overrun error occurs when the number of digits in the flow rate value exceeds the display capacity of the device. To clear this error, reduce the number of decimal places (for example, display rate in tenths rather than hundredths), or enable the "× 1000" unit setting for the rate display using the "Multiplier" checkbox described above to display rate in terms of thousands of units.**



Figure 4.22—Overrun error

Input Type and Sensitivity Configuration

The MC-III EXP accepts either a turbine input or a pulse input. When the turbine input is selected, the user can also specify one of three sensitivity levels (low, medium, or high) to help minimize noise interference in the signal reception. A "low" sensitivity setting will detect a signal of approximately 20 mV peak-to-peak, while a "high" sensitivity setting will detect only signals that exceed 40 mV, peak-to-peak.

When a pulse input is selected, no sensitivity setting is required.

Cut-Off Thresholds

Periods of very low or interrupted flow can lead to inaccuracies in indicated flow totals. To help prevent these inaccuracies, the user can establish cut-off thresholds to determine the minimum frequency and/or flow rate at which a signal will be recorded.

The flow rate cut-off is a setpoint for the accumulation of flow time in the hourly and daily records, and can be applied to either a turbine input or pulse input.

The frequency cut-off is reserved for the turbine input only. When the low-frequency cut-off is configured, the MC-III EXP will ignore inputs that are less than the user-entered value.

Calculation Period

The flow calculation period is the number of seconds that are allowed for calculating the flow condition. This setting is easily adjusted with the "plus" and "minus" buttons on the screen, or the page-up and page-down keys on your computer keyboard. Increasing this setting value results in flow rates with greater resolution. This setting is also the time allowed for processing of display updates.

K-Factor Entry

The K-Factor Entry screen (Figure 4.23) allows users to calibrate the MC-III EXP using a single calibration factor from a turbine flowmeter or multipoint linearization. Users can also configure the MC-III EXP to compensate for the effect of pressure, temperature, and compressibility on gas volume measurements.

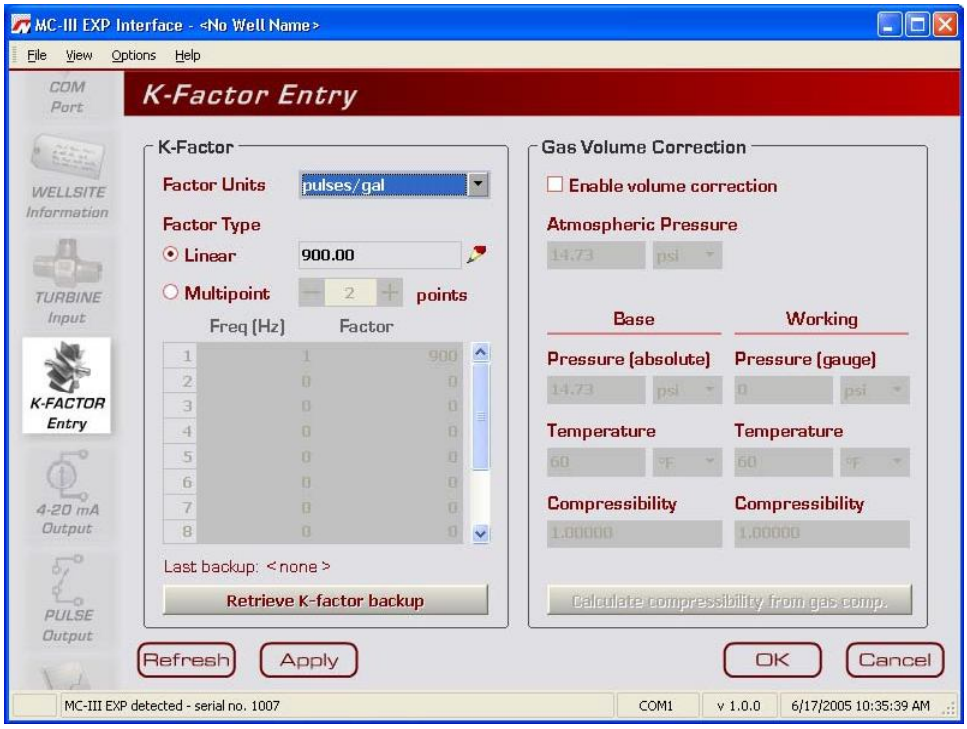

Figure 4.23—K-Factor Entry screen

K-Factor Units

K-Factor entry consists of selecting the K-Factor unit and type (linear or multipoint). In selecting the unit, users can choose from five preprogrammed units (pulses per gallon, barrel, cubic meter, cubic foot, or liter). If a calculated divisor is to be used, "pulses per unit" should be selected.

K-Factor Type

For linear calibration, the user need only select the Linear checkbox and enter the K-factor of the turbine meter. To enter the K-factor value, click on the pencil icon to open a data-entry window (Figure 4.24). Enter the digits, left to right, and adjust the slide bar to move the decimal point to the proper position.

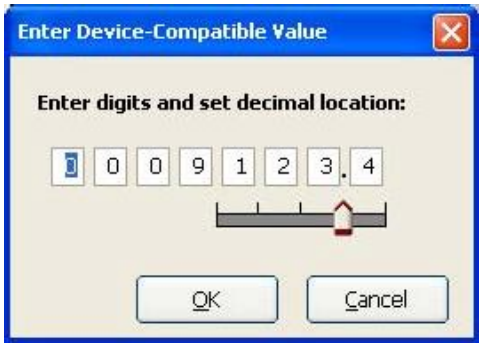

Figure 4.24—Data-entry screen for linear K-factor

For multipoint calibration, the user selects the Multipoint checkbox, and then enters the number of calibration points he desires using the "plus" and "minus" buttons on the screen or the page-up and page-down keys on a computer keyboard. Up to 12 calibration points may be entered. Frequency and factor data-entry fields are automatically activated for the number of calibration points selected. The user can then enter the appropriate data for each point.

K-Factor Backup

Each time a calibration factor is entered or changed, the software prompts the user to copy the previous settings to backup memory (Figure 4.25). In the event that an error is made while entering configuration parameters, the user can restore the last saved set of configuration settings to the instrument.



Figure 4.25—Prompt to copy previous calibration settings to backup

Select "yes" to save the previous calibration factor to memory. The date and time of this backup is displayed next to the "Retrieve K-Factor Backup" button on the K-Factor Entry screen (*Figure 4.26, page 62*). Only the last saved backup can be retrieved.

To retrieve the last saved K-Factor backup, perform the following steps:

1. Press the "Retrieve K-Factor Backup" button. A confirmation screen will appear with a prompt to proceed or terminate the retrieval.
2. Press "yes" to retrieve the last backup.
3. Click "OK" or "Apply" to save the retrieved settings to the configuration file. Because the retrieval of these settings represents a change to the current K-Factor settings, you will again be prompted to copy the previous settings to backup.

Gas Volume Correction (Supercompressibility Calculation)

Gas turbine meters are calibrated in actual cubic feet (ACF), and measure gas in actual cubic feet. In some applications, a user may benefit from referencing gas measurements back to standard conditions by measuring in terms of standard cubic feet (SCF). The MC-III EXP makes this process quick and easy, by using fixed average values for the flowing gas temperature and flowing gas pressure.

By default, this option is disabled.

To access this feature, check the "Enable volume correction" checkbox in the Gas Volume Correction section of the K-Factor Entry screen. The "STANDARD" annunciator on the LCD will illuminate, and all other Gas Volume Correction data fields will be activated (Figure 4.26).

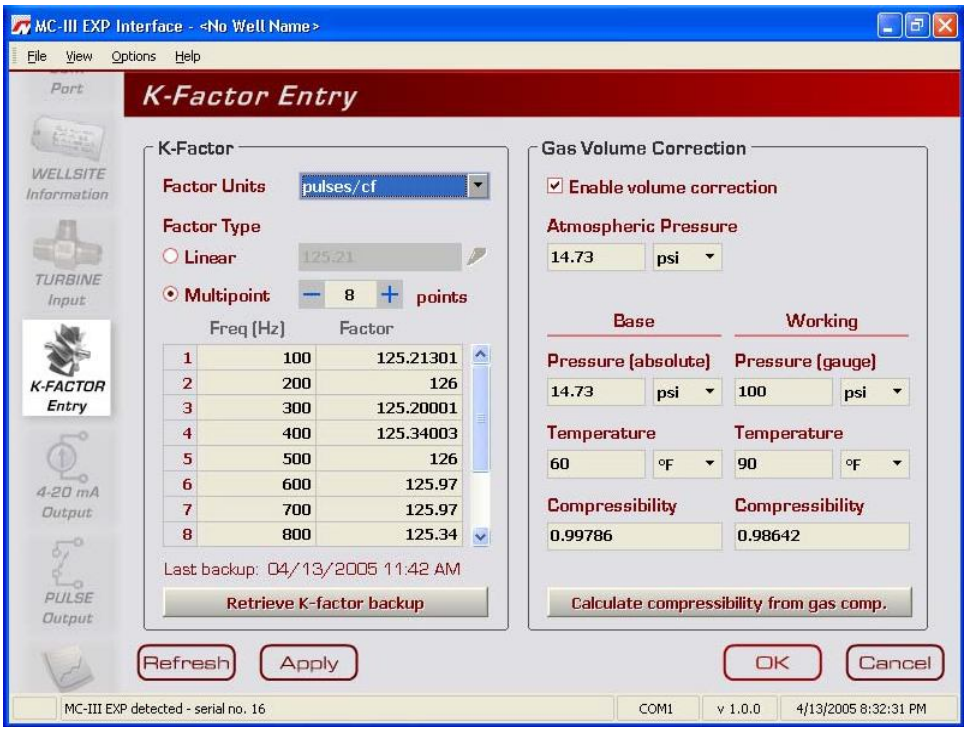

Figure 4.26—Gas volume correction settings on K-Factor Entry screen

Atmospheric pressure is set at 14.73 psia by default, but can be adjusted to local conditions.

To compensate the gas measurement to standard conditions, complete the following steps:

1. Enter the atmospheric pressure.
2. Enter the base pressure and unit. The base pressure is the pressure to which the gas will be compensated (typically, 14.73 psia).
3. Enter the base temperature and unit. The base temperature is the temperature to which the gas will be compensated (typically, 60°F).
4. Enter the working pressure and unit. The working pressure is the user-entered pressure that represents the average working (flowing) pressure.
5. Enter the working temperature and unit. The working temperature is the user-entered temperature that represents the average working (flowing) temperature.

6. Enter a known compressibility factor, or press "Calculate compressibility from gas comp." to view a selection of gas compositions (Figure 4.27).

    - To automatically calculate the compressibility factor, enter the gas composition and click on "Calculate." The software will calculate flowing gas compressibility in accordance with the AGA-8 detail method.
    - The K-Factor Entry screen will reappear, and the calculated super-compressibility factor will be displayed.

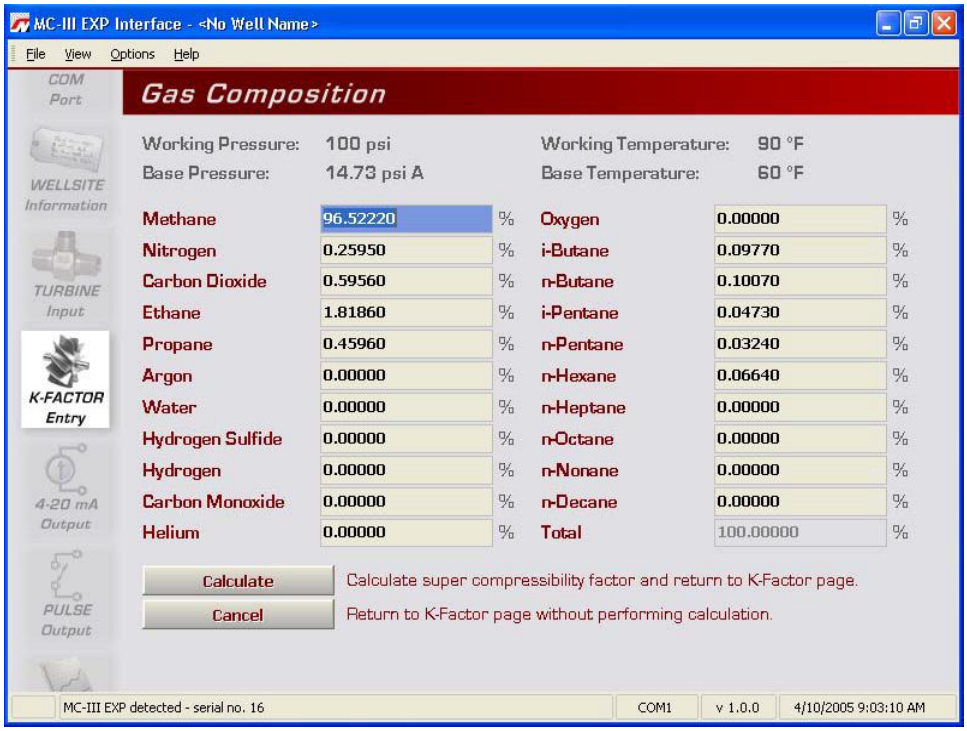

Figure 4.27—Gas Composition screen

4-20 mA Output

Caution: **Before performing any 4-20 mA calibration, ensure that all peripheral equipment connected to the 4-20 mA current loop is either disconnected or disabled. Calibrating and testing the 4-20 mA output feature on the MC-III EXP with the peripheral equipment in operation may cause false alarms or erroneous operation of the peripheral device or associated equipment.**

The 4-20 mA Output screen (Figure 4.28) allows users to configure the MC-III EXP to provide a 4-20 mA output representing flow rate. Zero and full-scale values can be configured to represent any flow rate range within the range of the flowmeter. A test mode function is also included, allowing a user to calibrate and/or verify the output received by an end device.



Figure 4.28—4-20 mA Output screen

The low (or zero) setting is the flow rate value that will produce a 4-mA output. The high (or full-scale) setting is the flow rate value that will produce a 20-mA output. Typically, the high value is greater than the low value.

Flow rates in-between the minimum and maximum rate setpoints will result in an output of current between 4 mA and 20 mA according to the following calculation:

$$I_{OUT} = \frac{[I_{MAX} - I_{MIN}]}{High - Low} \times [RATE_{CURR} - Low] + I_{MIN}$$

Where:

I_{OUT} = output current

I_{MAX} = maximum current output (20 mA)

I_{MIN} = minimum current output (4 mA)

High = programmed flow rate that produces a 20-mA output

Low = programmed flow rate that produces a 4-mA output

$RATE_{CURR}$ = flow rate

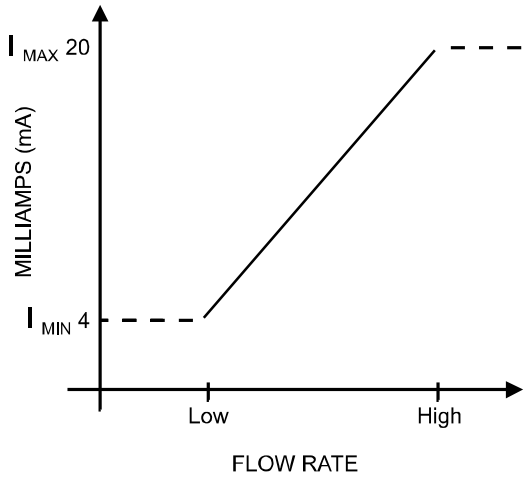

Figure 4.29—4-20 mA output configuration

Enabling 4-20 mA Output

By default, the 4-20 mA output option is disabled. To enable this feature, perform the following steps:

1. Check the "Enable" checkbox.
2. Click on the pencil icon next to the Low Flow Rate field to launch a data-entry window (Figure 4.30) and enter the "low" or "zero" flow rate value that will produce a 4-mA output. Adjust the decimal position, if necessary, using the slide bar. A flow rate less than or equal to this minimum setpoint will result in an output of 4 mA.
3. Click on the pencil icon next to the High Flow Rate field and enter the "high" or "full-scale" flow rate value that will produce a 20-mA output. Adjust the decimal position, if necessary, using the slide bar. A flow rate equal to or greater than this maximum setpoint will result in an output of 20 mA.

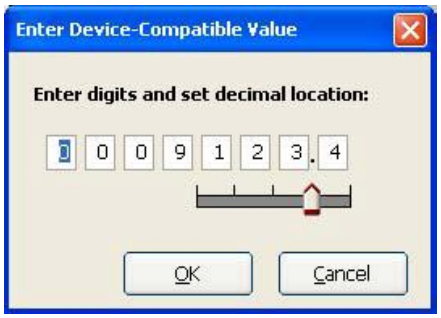

Figure 4.30—Data-entry screen for 4-20 mA low and high values

4-20 mA Output Testing

The MC-III software allows users to test the 4-20 mA output by entering an output current value and reading the live value generated in response.

To use the test mode, press the "Test 4-20 mA Output" button at the bottom of the 4-20 mA Output screen. The test page will appear (Figure 4.31), and the 4-20 mA Output option will be temporarily disabled.

To test the output, enter a value in the Output Current (mA) field, and press "Set Output."

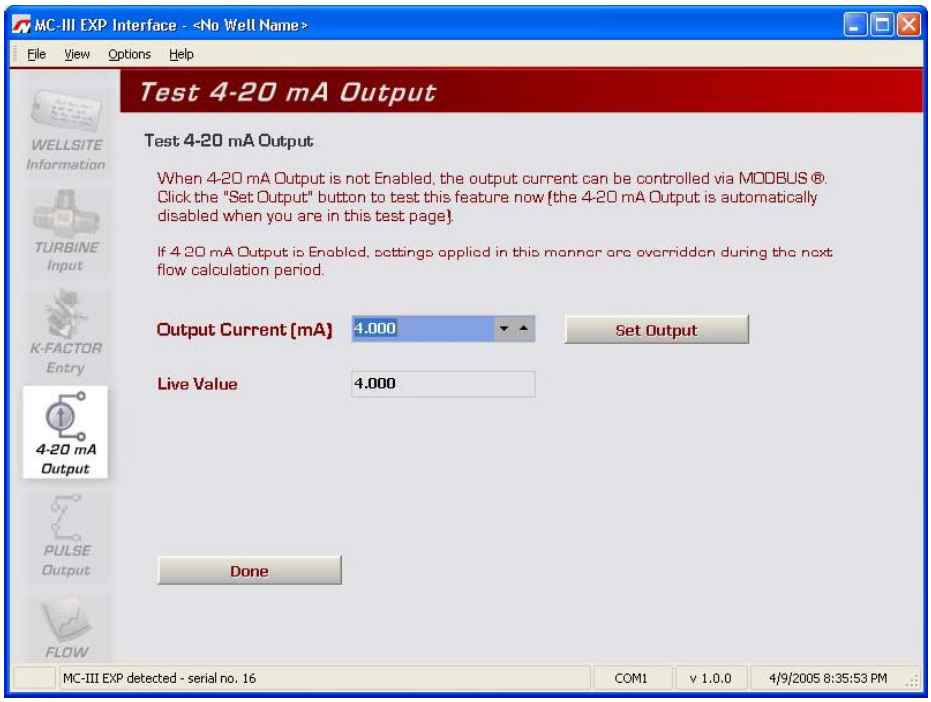

Figure 4.31—4-20 mA output test screen

Pulse Output

The Pulse Output screen (Figure 4.32) allows users to configure the MC-III EXP to provide a pulse output representing increments in volume. A test mode function is also included, allowing a user to calibrate and/or verify the output received by an end device.



Figure 4.32—Pulse Output screen

Configuring Pulse Output

By default, the pulse output option is disabled to reduce current consumption. To conserve power, do not enable this feature unless it will be used.

To enable the pulse output option, perform the following steps:

1. Check the "Enable" checkbox.
2. Enter the pulse duration value using the "plus" and "minus" buttons on the screen, or the page-up and page-down keys on a computer keyboard. The pulse length (pulse width) determines the length of each output pulse in milliseconds (ms).
3. Click on the pencil icon next to the scale field to open a data-entry window (*Figure 4.33, page 68*), and enter the scale factor. Adjust the decimal position, if necessary, using the slide bar. The scale factor sets the volume increment that will cause a pulse output to occur. The unit for this factor is determined by the unit set for the volume display.

Note—The scale factor can be any number; it is not limited to powers of 10 (1, 10, 100, etc.).

In applications where high flow rates may occur for extended periods, pulses can be lost due to the instrument's inability to register the flow rate at the maximum output frequency. To avoid the loss of pulses, users can raise the scale factor or shorten the pulse duration. The software calculates the maximum flow rate that can be reached before pulse caching is likely to occur, and displays the information on the Pulse

Output screen. In applications where short bursts of high flow rates are common (separators, tank loading, dump cycles, etc.), the displayed flow rate can exceed the maximum flow rate for short periods without compromising the accuracy of the total represented by the pulse output.

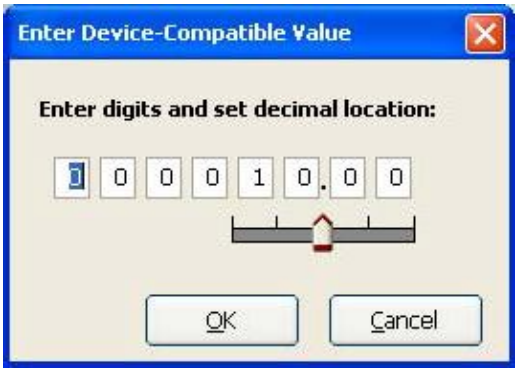

Figure 4.33—Data-entry screen for pulse output scale factor

Pulse Output Testing

The MC-III software allows users to test the pulse output by writing a value to the pulse accumulator. Such tests can aid in troubleshooting problems with hardware compatibility, threshold settings, and pulse duration settings.

To use the test mode, press the "Test Pulse Output" button at the bottom of the Pulse Output screen. The test page will appear (Figure 4.34), and the Pulse Output option will be temporarily disabled.

To test the output, enter a value in the Pulse Count field, and press "Set Output." The value in the Live Value field will decrement to zero in accordance with the programmed pulse duration.

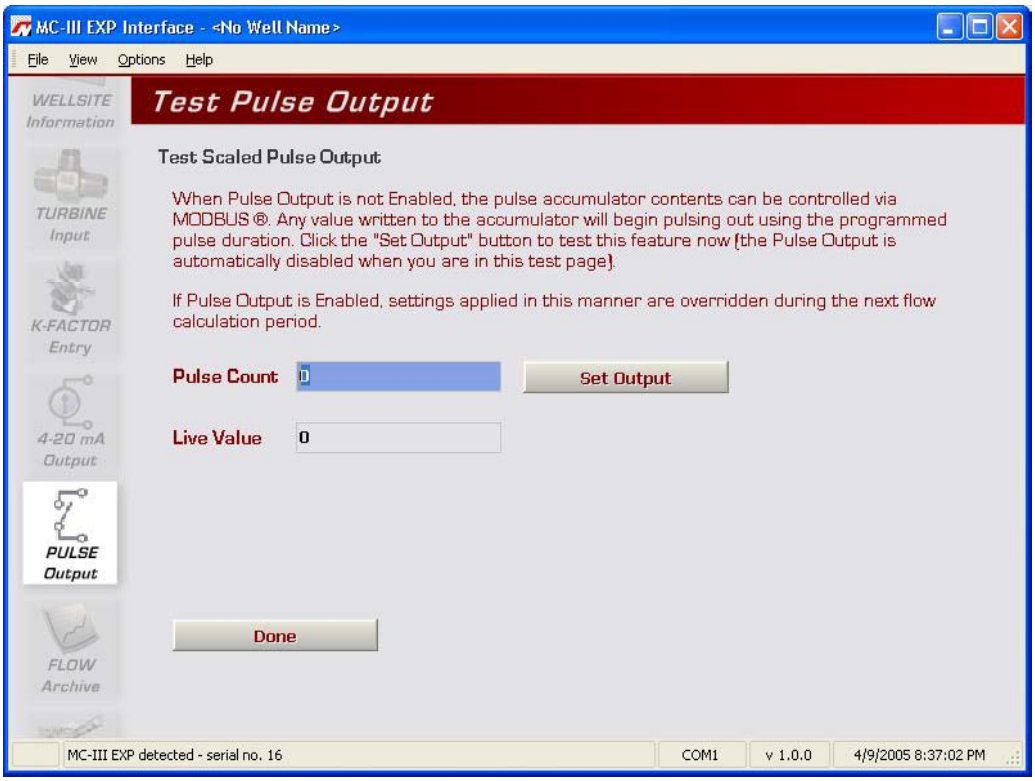

Figure 4.34—Pulse output test screen

Saving and Uploading Configuration Files

The MC-III EXP allows a user to save configuration settings in a file that is stored on the user's computer and can be uploaded to the MC-III EXP as needed. Configuration files are easily identified by the .mc3 extension. The default filename begins with "config" and uses the following structure:

File Format	Filename Structure
.mc3	"config"<date (YYMMDD)> <time (hhmmss)>.mc3 Example: config050209133922.mc3 is a configuration file that was downloaded on February 9, 2005 at 1:39:22 p.m.

Saving a Configuration File

To save current configuration settings for future reference, perform the following steps:

1. Select File>Save Configuration File (Figure 4.35). A "Save MC3 Configuration File" screen (Figure 4.36) will appear, prompting the user to save the file to the computer hard drive. The default directory is C:\Nu-Flo log data\MC-III\<WELL NAME>, however the user can specify a new location, if desired.

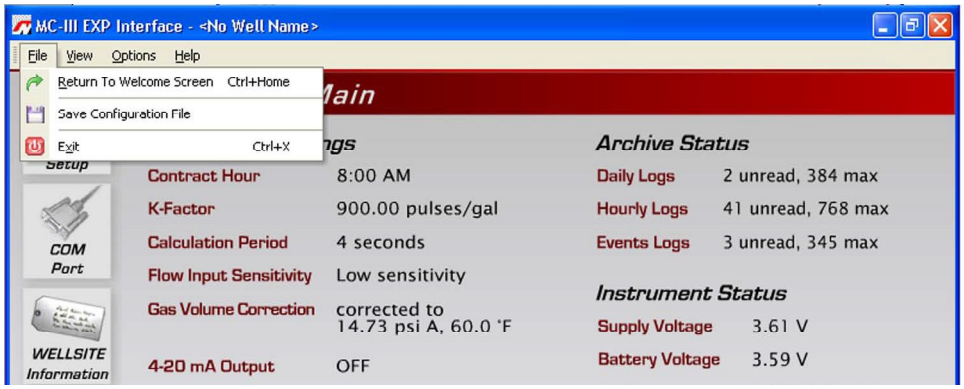

Figure 4.35—File dropdown menu allows user to save a configuration file

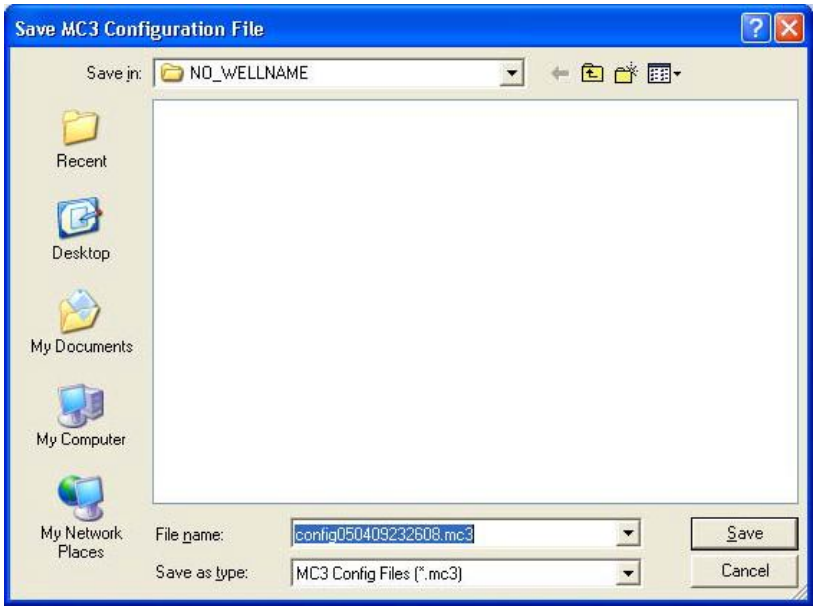

Figure 4.36—Default directory for configuration files

2. Click “Save.” An “Information” window will appear to confirm that the file has been saved.

The “wellname” folder will bear the well name that appears on the Wellsite Information screen. If no well name is entered on this screen, the folder will be named “NO_WELLNAME” (*Figure 4.36, page 69*).

Uploading a Configuration File

To upload a configuration file, perform the following steps:

1. From the Main screen, select File>Return to Welcome Screen (Figure 4.37).
2. Click on the LCD to connect to the MC-III EXP.
3. Click “Upload a configuration” (*Figure 4.38, page 71*) and click “Do It Now.” A “Load MC3 Configuration File” window will appear (*Figure 4.39, page 71*), displaying the contents of the MC-III folder.
4. Click on the appropriate well name folder, select the configuration file of your choice, and click “Open.” A “Progress” window will appear momentarily, followed by an “Information” window confirming the upload.

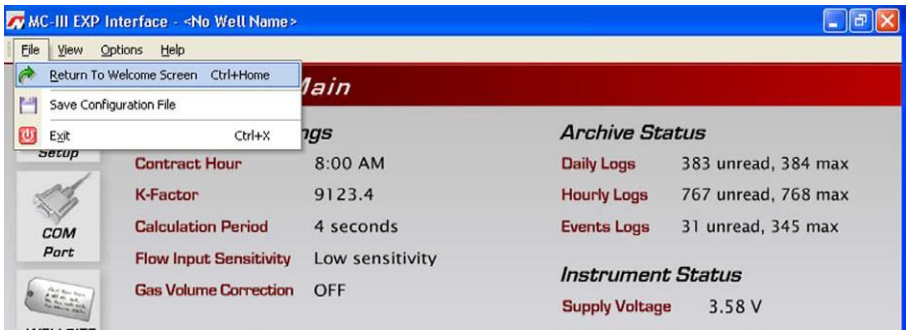

Figure 4.37—File dropdown menu allows user to return to the Welcome screen

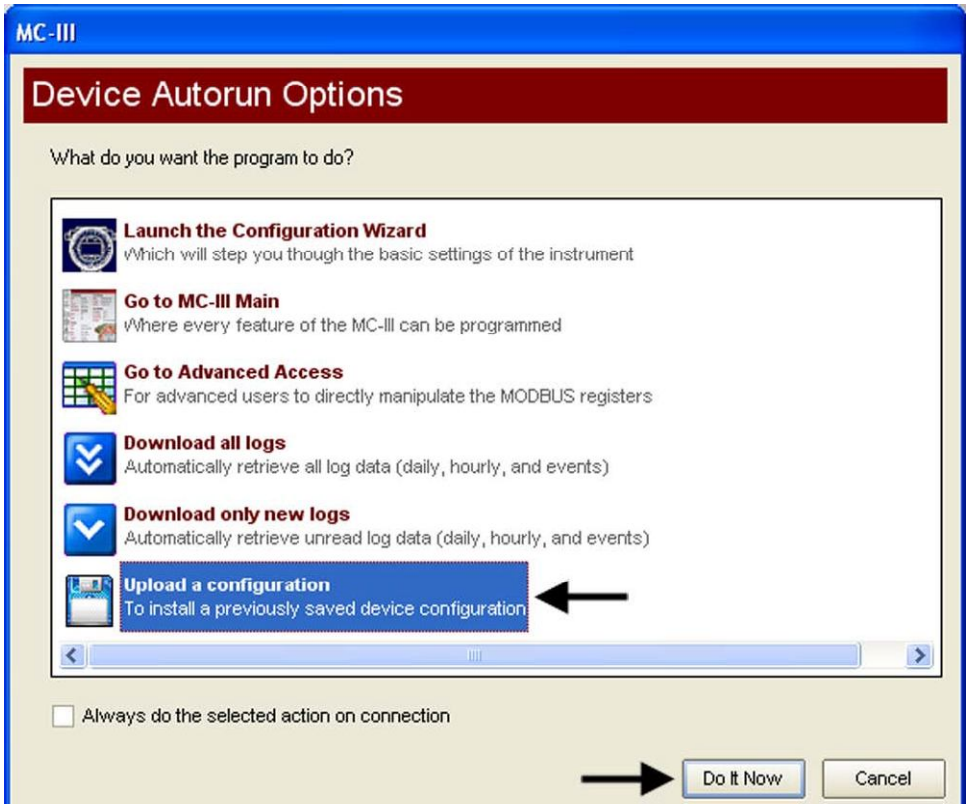

Figure 4.38—Upload a Configuration option

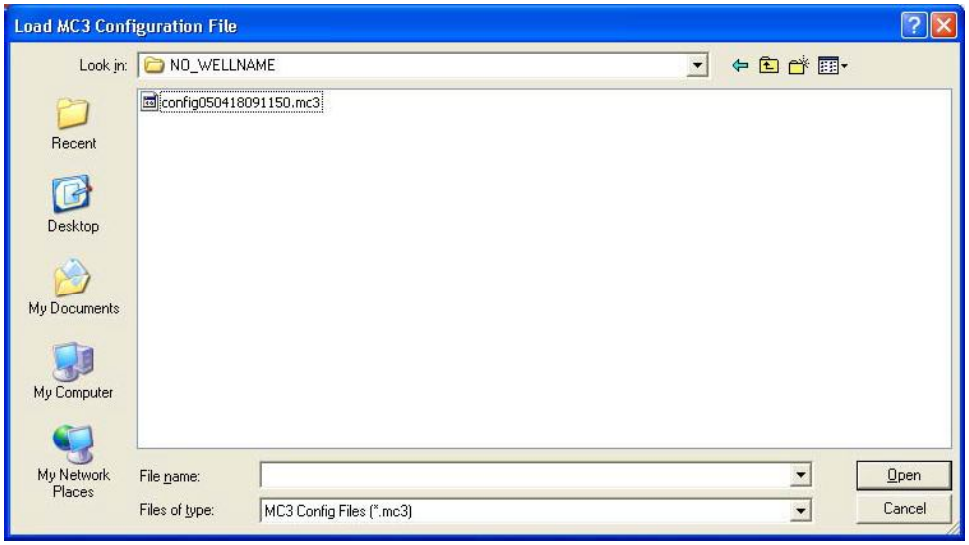

Figure 4.39—Default directory for configuration files

Advanced Access

System configurators and host programmers can also access the software through the Advanced Access menu (Figure 4.40). This option provides access to the Modbus® registers for the MC-III EXP. A series of tabs on the right side of the screen (real time, input configuration, output configuration...) allows the user to view a specific group of registers, or to view all registers in one list.

Important: The Advanced Access option is not required for the routine operation of the MC-III EXP, and novice users should not access this portion of the software unless instructed to do so by Cameron technical support personnel.

Data retrieved from the MC-III EXP while in Advanced access mode can be logged to a file by enabling the "Automatically log data polls" checkbox on the Advanced Options screen (*Figure B.6, page B-6*). The file will include values that are retrieved from the instrument when the user clicks the "Get All Data" button or enables "Auto Polling" on the Advanced Access screen. See also *Automatic Data Logging, page B-6*.

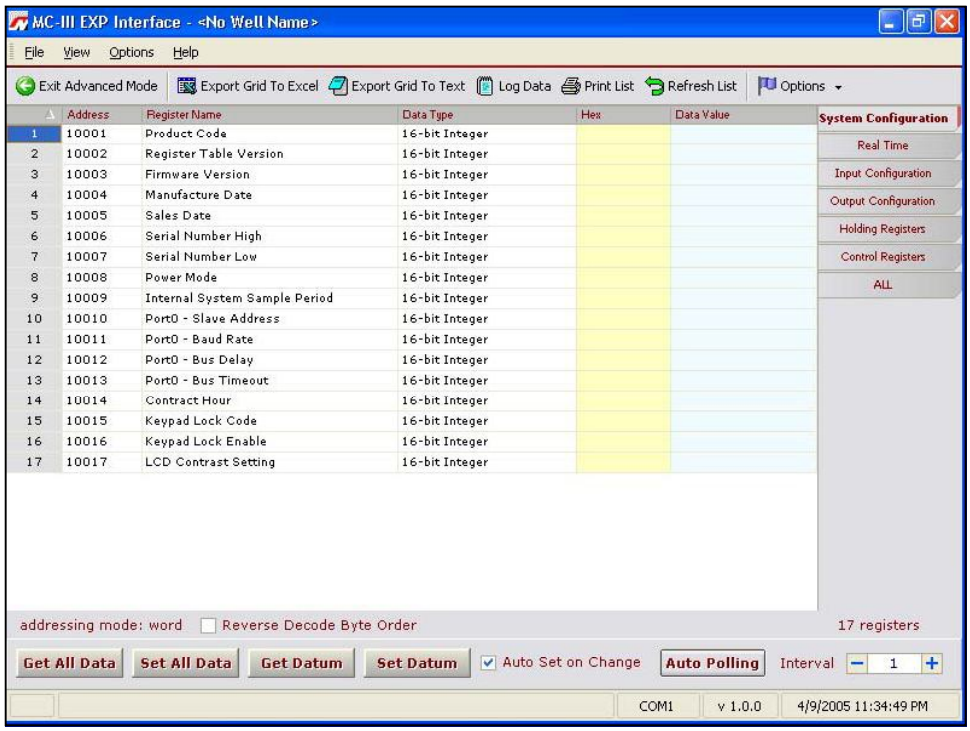

	Address	Register Name	Data Type	Hex	Data Value
1	10001	Product Code	16-bit Integer		
2	10002	Register Table Version	16-bit Integer		
3	10003	Firmware Version	16-bit Integer		
4	10004	Manufacture Date	16-bit Integer		
5	10005	Sales Date	16-bit Integer		
6	10006	Serial Number High	16-bit Integer		
7	10007	Serial Number Low	16-bit Integer		
8	10008	Power Mode	16-bit Integer		
9	10009	Internal System Sample Period	16-bit Integer		
10	10010	Port0 - Slave Address	16-bit Integer		
11	10011	Port0 - Baud Rate	16-bit Integer		
12	10012	Port0 - Bus Delay	16-bit Integer		
13	10013	Port0 - Bus Timeout	16-bit Integer		
14	10014	Contract Hour	16-bit Integer		
15	10015	Keypad Lock Code	16-bit Integer		
16	10016	Keypad Lock Enable	16-bit Integer		
17	10017	LCD Contrast Setting	16-bit Integer		

Figure 4.40—Advanced Access screen

Section 5—Flow Logs and Event Logs

The MC-III™ EXP's flow archive expands the user's ability to track flow volume over time by allowing the user to view flow data in tabular and trend formats, to save or print log data in reports, and to export log data into a spreadsheet. Additionally, an event archive allows users to identify changes to configuration parameters and other settings for troubleshooting operational issues.

A user can download logs from the Flow Archive and Event Archive screens as needed, or configure the software to automatically download the logs upon connection with the instrument. See *Automating Functions on Software Startup, page 41*, for more information.

When the "download all logs" or "download only new logs" option is selected from the Device Autorun Options menu and the "Always do..." checkbox is checked, the software will download both flow logs and event logs each time the software connects to the MC-III EXP (Figure 5.1).

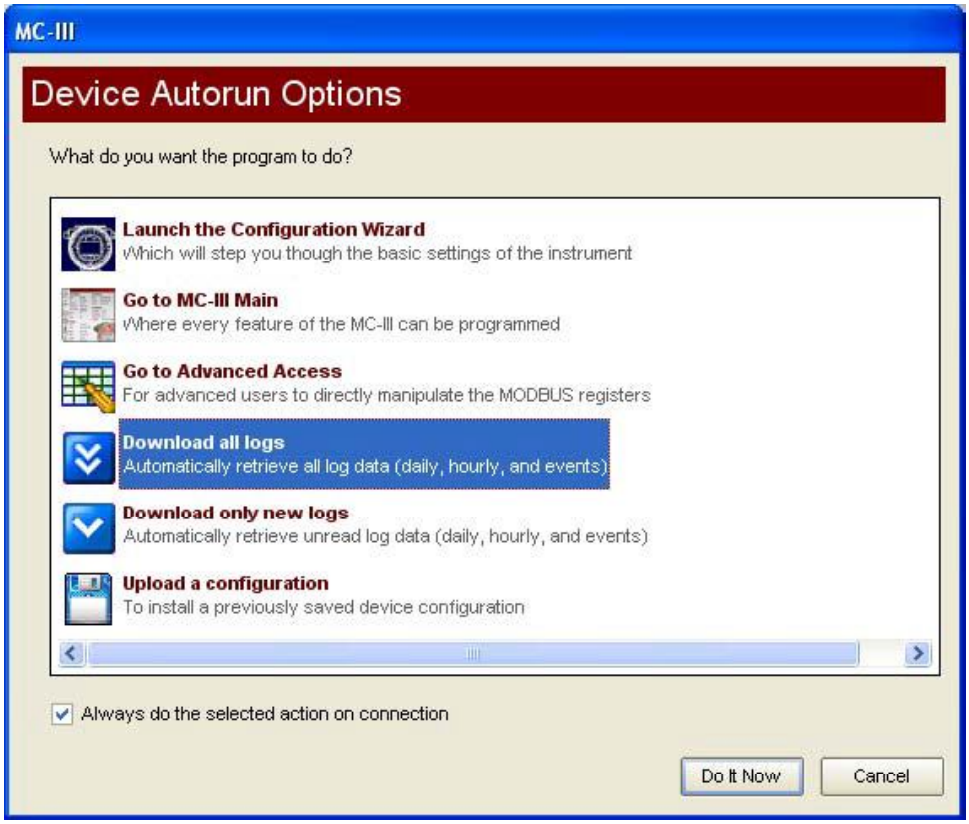

Figure 5.1—Device Autorun Options screen allows automated log downloads with every connection

Auto-Save Log Formats

The MC-III EXP automatically saves daily flow logs on the contract hour, and saves hourly flow logs around the clock. The instrument also automatically saves an event log each time a user change is made. After downloading these logs from the instrument, the software saves the data in a file. By default, the logs are saved as .csv files.

The file format of the auto-save flow log and event log files is user-configurable. To save logs in Excel (.xls) format, click Options>Program Options in the task bar, select Downloading from the dropdown options list, and check the "XLS-MS Excel File" checkbox (*Figure 5.2, page 74*).

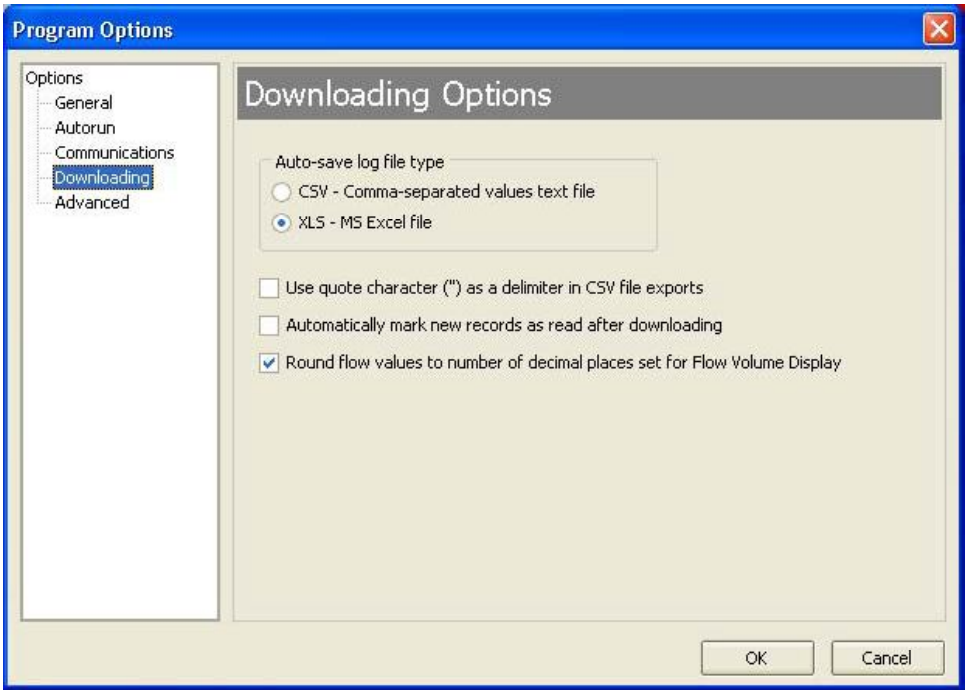

Figure 5.2—Log download options

Log Directory and Filenames

Auto-save log files are saved in C:\NuFlo log data\MC-III\<WELL NAME>. The "wellname" folder will bear the well name that appears on the Wellsite Information screen. If no well name is entered on this screen, the folder will be named "NO_WELLNAME."

Log filenames incorporate the serial number of the MC-III EXP, the date, the time, and a capital letter indicating the log type, as shown below.

File Format	Filename Structure
.xls or .csv	<Serial number>_<date (YYYYMMDD)>_<time (hhmmss)>_<log type indicator> where the log type indicator is "H" for hourly, "D" for daily, or "E" for event Example: 16_20050302_102031_H.xls is an hourly log file from the MC-III EXP serial number 16 that was downloaded on March 2, 2005 at 10:20:31 AM.

Flow Archive

The MC-III EXP automatically saves daily flow logs on the contract hour, and hourly flow logs. The Flow Archive screen (*Figure 5.3, page 75*) allows users to download, view, and print trend charts, and export daily and hourly logs. On the Flow Archive screen, users can view up to 384 daily logs and 768 hourly logs in tabular format (note the Daily Logs and Hourly Logs tabs at the bottom of the screen), or in a trend chart (see Daily Trend and Hourly Trend tabs).

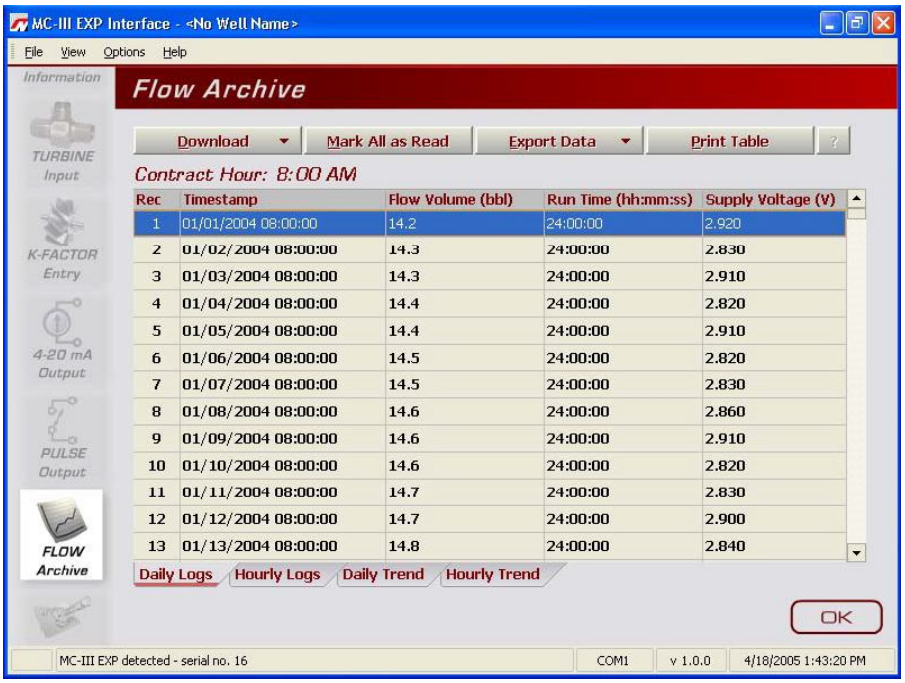

Figure 5.3—Flow Archive screen

Downloading Flow Logs

To download flow logs, click the "Download" button on the Flow Archive screen, and select either Download All Flow Logs or Download Only New Flow Logs (Figure 5.4). (Download Only New Flow Logs will display only flow logs that have been created since the last download was performed.) Tabular views of the archive record (*Figure 5.5, page 76*) include a time stamp showing the exact time each log was recorded, as well as flow volume, run time, and supply voltage. Trend views (*Figure 5.6, page 77*) show the flow volume and time stamp only.

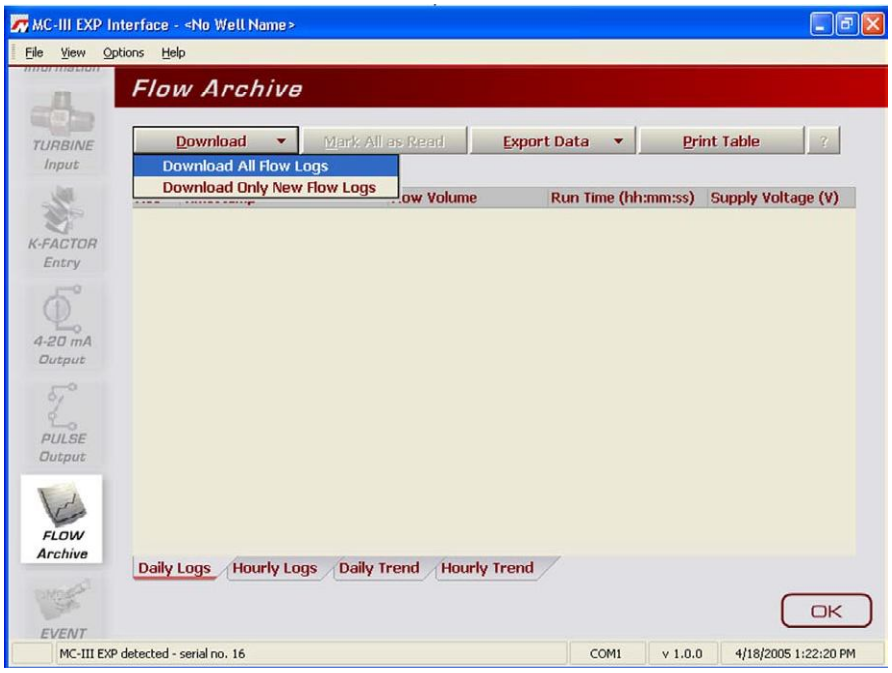

Figure 5.4—Menu for downloading flow logs from the Flow Archive screen

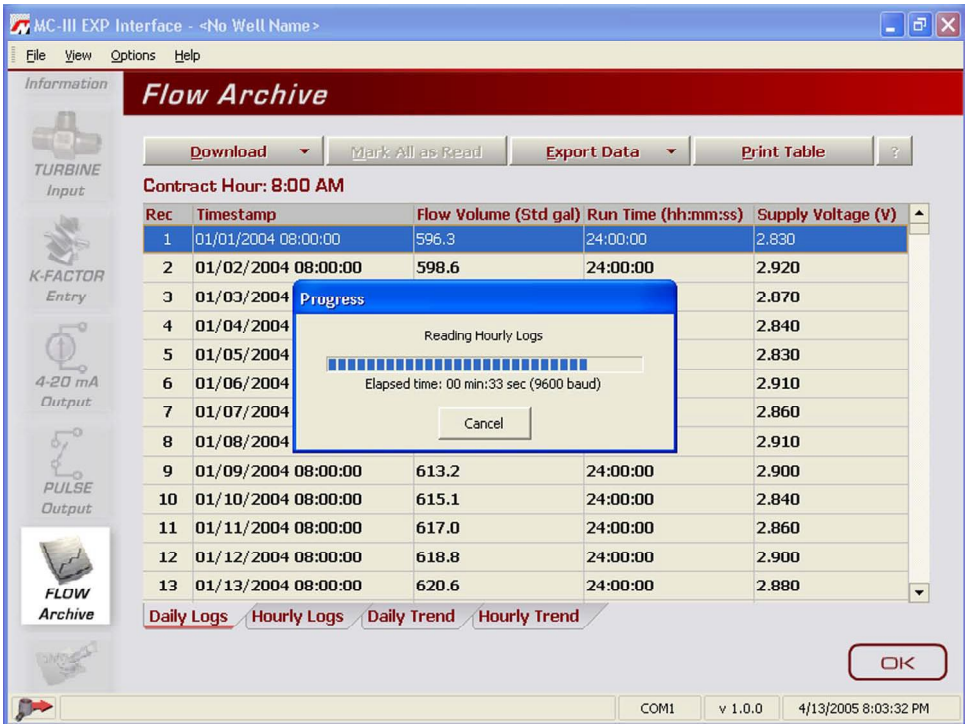

Figure 5.5—Downloaded flow logs (tabular view)

Viewing Trend Charts

In the daily and hourly trend views, flow volumes are charted on a grid, with flow record numbers forming the horizontal axis, and flow volumes shown on the vertical axis. A graphical line defined by two yellow endpoints represents the range of archived logs available for viewing. A yellow triangle marks the first record, and a yellow circle marks the final record. The arrowhead cursor is paired with dotted circle. As the user drags the cursor across the chart, the circle's position corresponds with the record displayed at the top of the screen (*Figure 5.6, page 77*). The circle's snap function allows the user to pinpoint transitional points within the trend display; the greater the zoom, the more precise the navigation.

Note—The interactive cursor cannot be turned off.

- To zoom in, left-click and drag the mouse to the right and down.
- To zoom out, drag the mouse up and to the left.
- To reposition the chart within the viewing window, right-click the chart and move the mouse slowly in any direction.
- To exit the page and return to the Main screen, press OK.

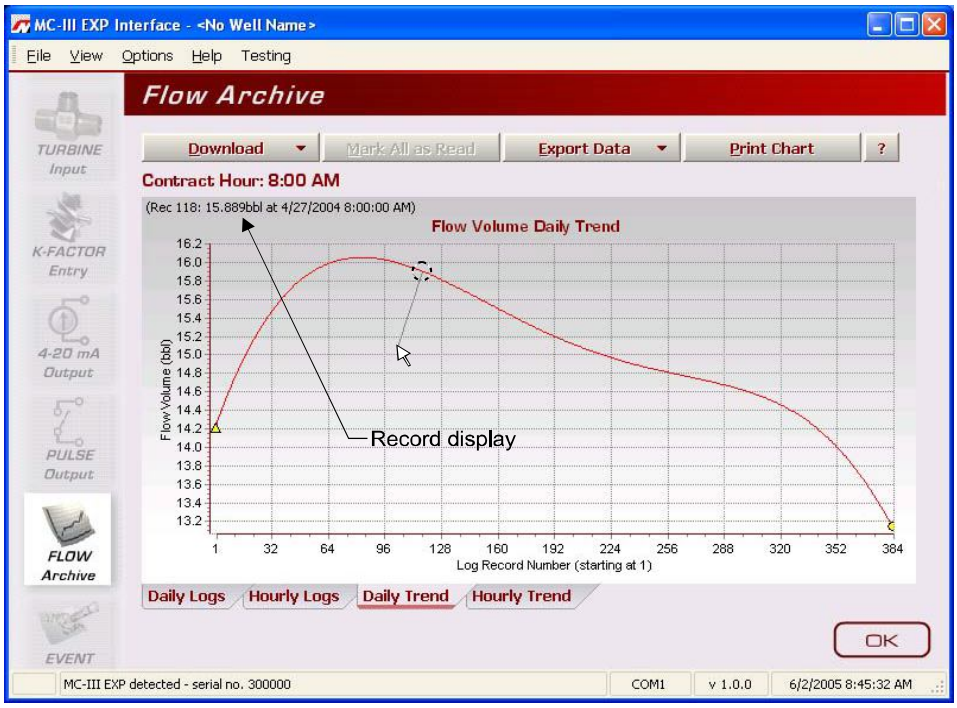

Figure 5.6—Flow Archive screen, trend view

Printing/Saving a Report

A flow log can be printed and/or saved as a table (Figure 5.7) or a trend chart (*Figure 5.8, page 78*).

To print a log, select the appropriate tab at the bottom of the Flow Archive screen, and press the "Print" button in the upper right corner of the Flow Archive screen. (If the display is tabular, the button will read "Print Table"; if the display is a chart, the button will read "Print Chart.") A Print Preview screen will appear, displaying the image to be printed.

To print the report, select File>Print from the task bar (Figure 5.7).

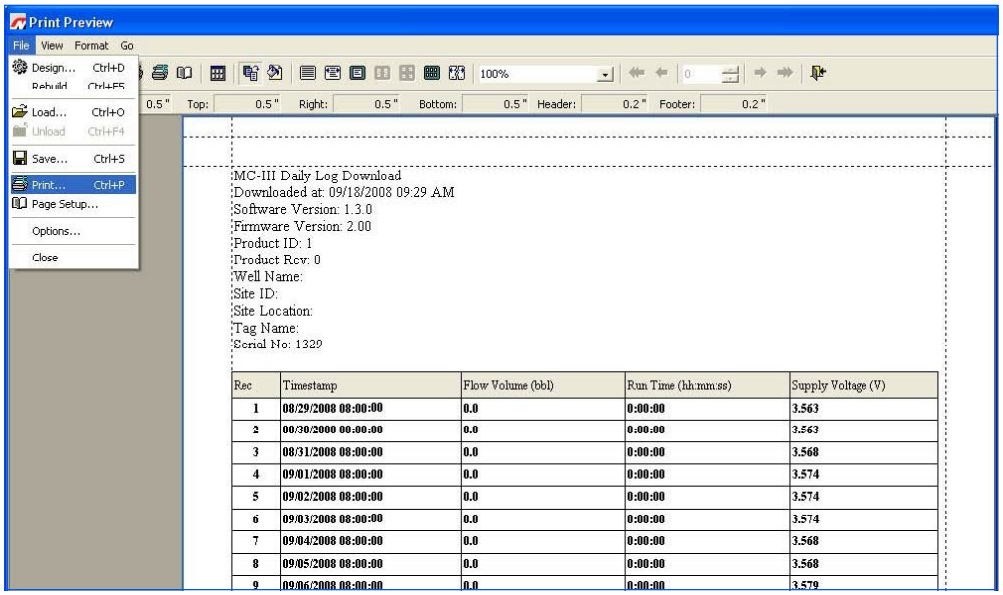

Figure 5.7—Print preview, tabular view

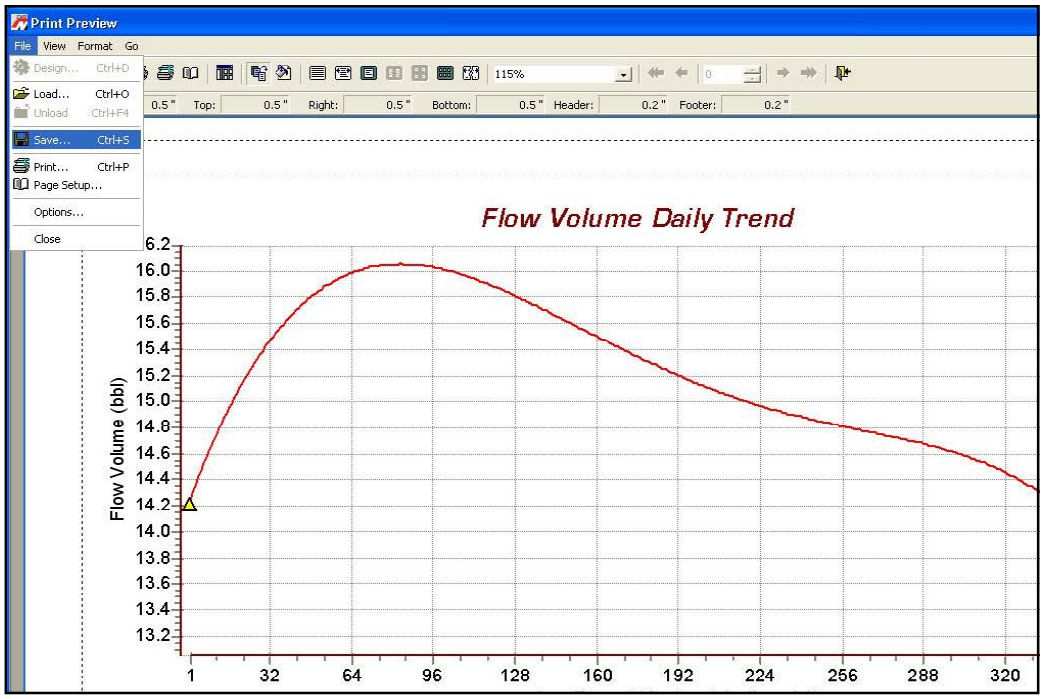

Figure 5.8—Print preview, trend view

To save the report, perform the following steps:

1. Select File>Save from the task bar (Figure 5.8). A "Save Report As" window will open (Figure 5.9).
2. Enter a filename. The filename extension will be .rps.
3. Click "Save." By default, log archive reports are saved in C:\NuFlo log data\MC-III\<WELL NAME>. However, the user can specify a new location, if desired. The "wellname" folder will bear the well name that appears on the Wellsite Information screen. If no well name is entered on this screen, the folder will be named "NO_WELLNAME."

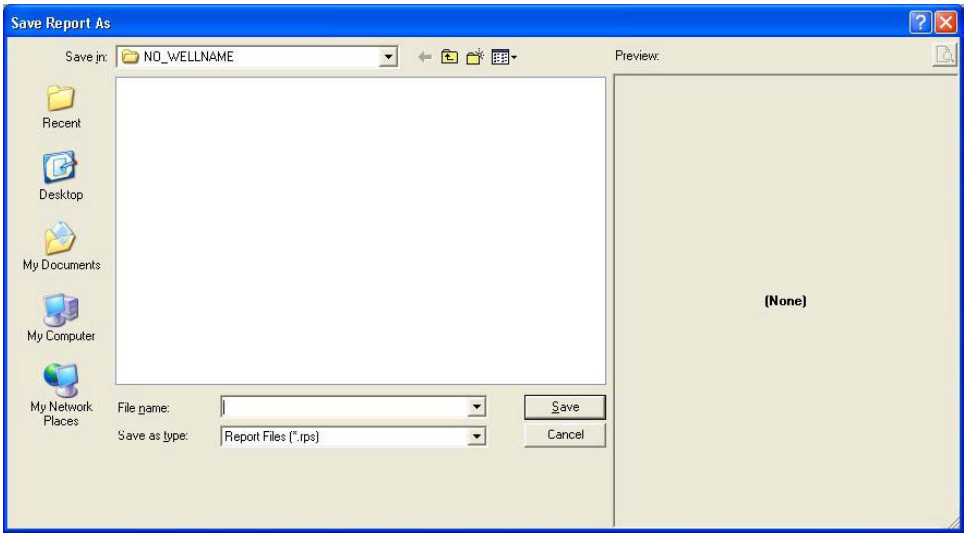

Figure 5.9—Save Report As screen

Viewing a Saved Report

To view a saved report, perform the following steps:

1. From the Flow Archive screen, click "Print Table" (or "Print Chart" for trend chart views) in the upper right corner of the screen.
2. Select File>Load from the task bar at the top of the page (Figure 5.10). A Load Report window will open (Figure 5.11).
3. Click on the report you wish to view. A preview of the report will appear in the right portion of the window.
4. Click "Open."

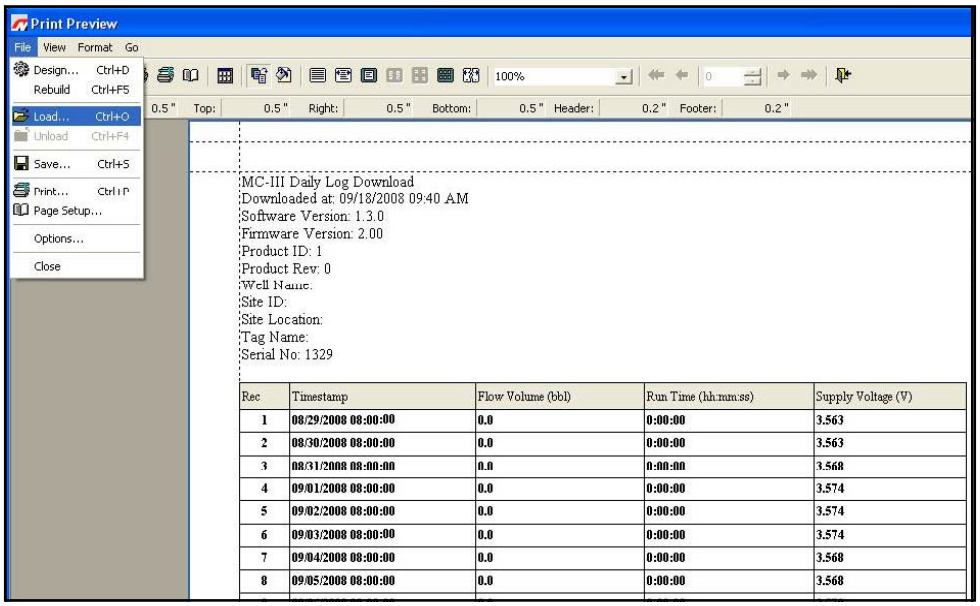

Figure 5.10—Menu for loading a saved report

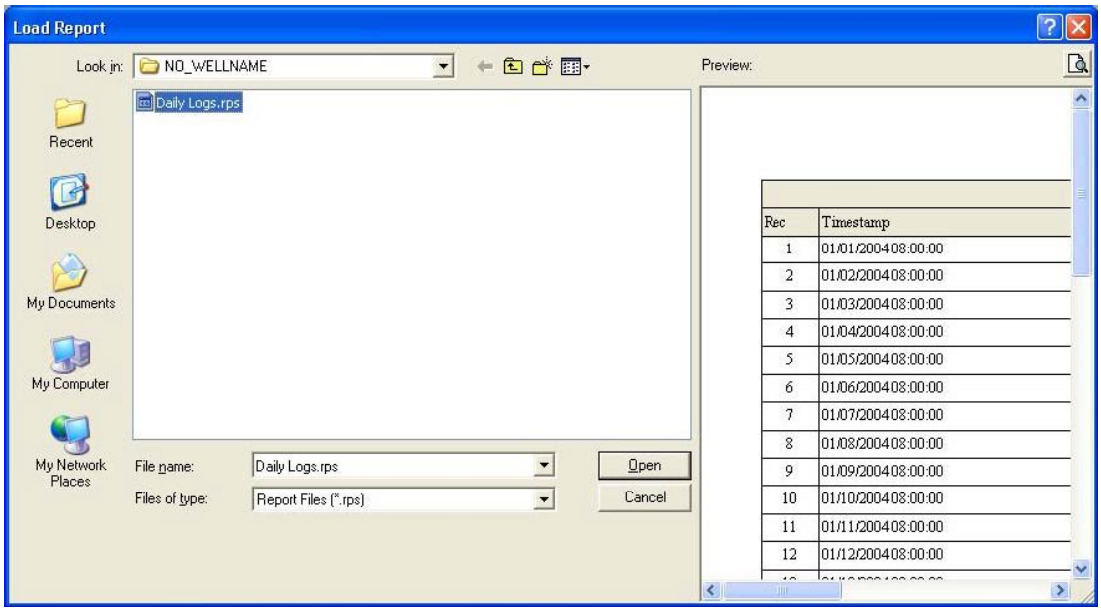

Figure 5.11—Load Report screen for viewing saved flow log reports

Exporting Flow Logs

Flow logs can be directly exported to an .xls or .csv file for ease in viewing and distributing. To export a file, perform the following steps:

1. Click the "Export Data" button near the top of the Flow Archive screen and select the .xls or .csv format (Figure 5.12).
2. When the "Export Daily (or Hourly) Log Data..." window appears, click "Save." By default, exported logs are saved in C:\NuFlo log data\MC-III\<WELL NAME>, however the user can specify a new location, if desired (*Figure 5.13, page 81*). The "wellname" folder will bear the well name that appears on the Wellsite Information screen. If no well name is entered on this screen, the folder will be named "NO_WELLNAME."

Important: **Users can also specify the file format to be used for all auto-save logs (.csv or .xls). To change the auto-save format, follow the procedure described in** *Downloading Options, page B-5***.**

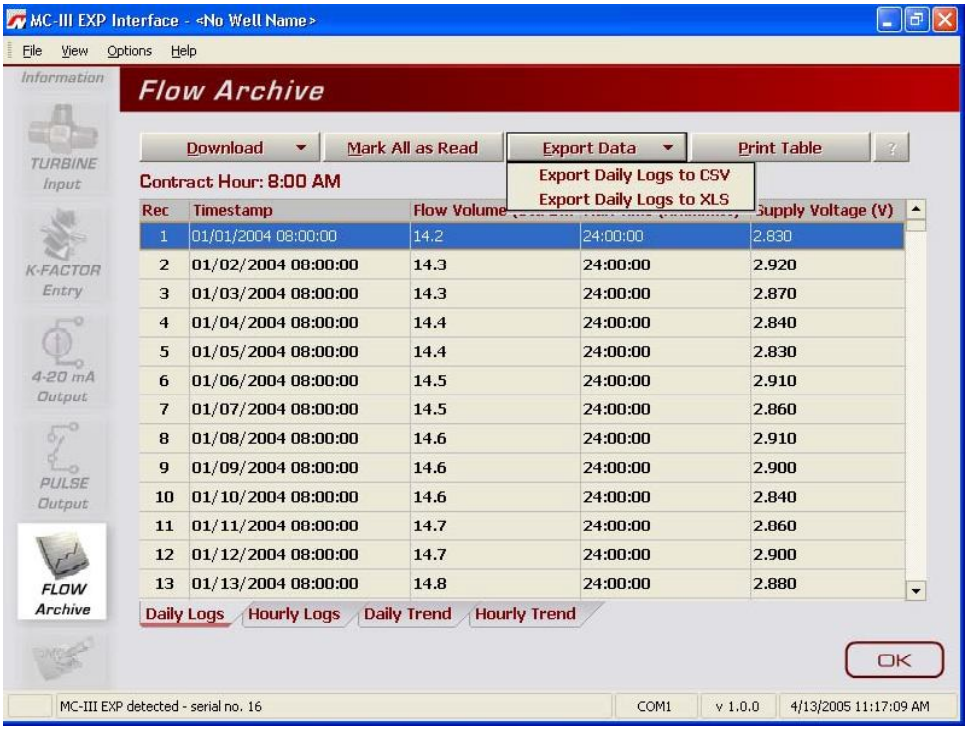

Figure 5.12—Dropdown menu for exporting log data

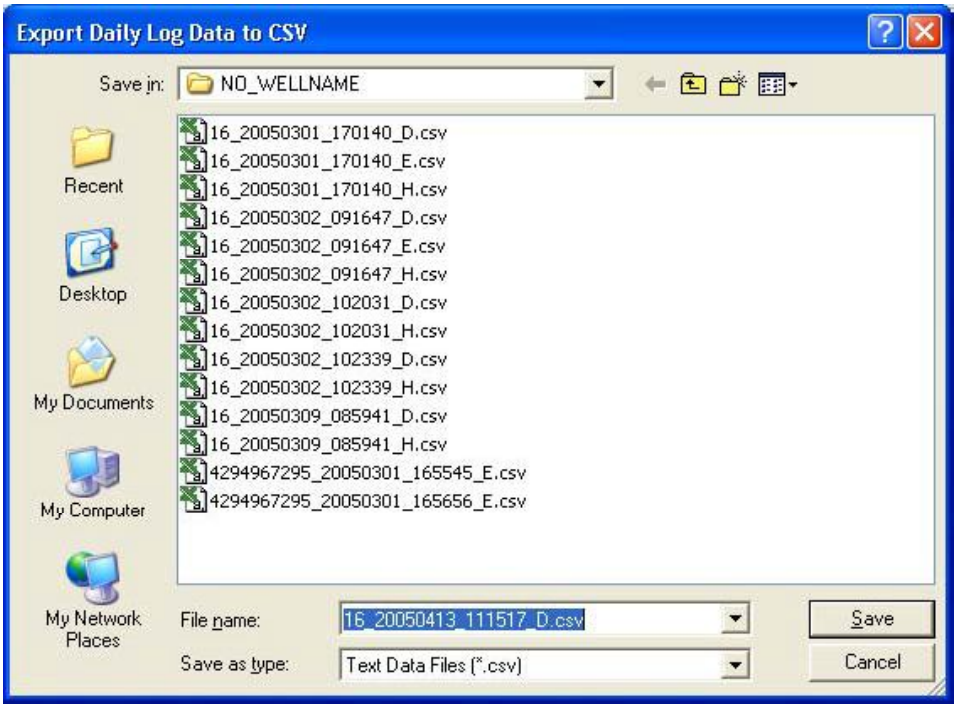

Figure 5.13—Default directory for exported log files

Event Archive

The Event Archive screen (Figure 5.14) allows users to download, view, export, and print up to 345 user event logs. Event logs are generated to track user changes such as K-Factor changes, input setting changes, power-on and "watch-dog" resets, and the flow and frequency cut-off settings.

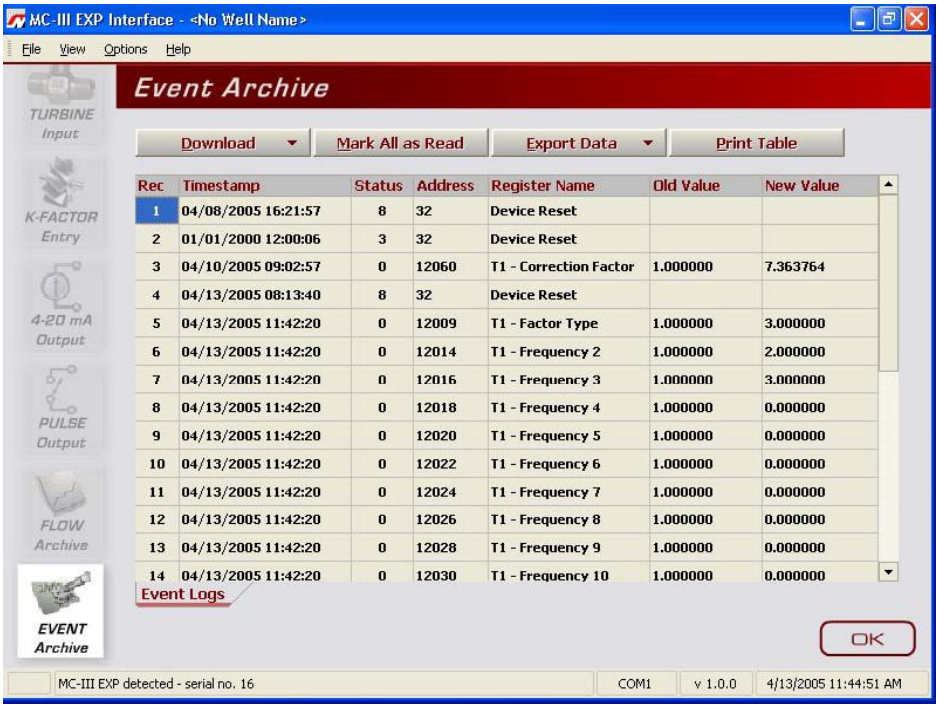

Figure 5.14—Event Archive screen

Downloading Event Logs

To download event logs, click the "Download" button on the Event Archive screen, and select either Download All Event Logs or Download Only New Event Logs, (Figure 5.15). Download Only New Event Logs will display only flow logs that have been created since the last download was performed. Tabular views of the archive record (Figure 5.16) include a time stamp showing the exact time each log was recorded, as well as the name of the register changed, and the old and new values assigned to that register.

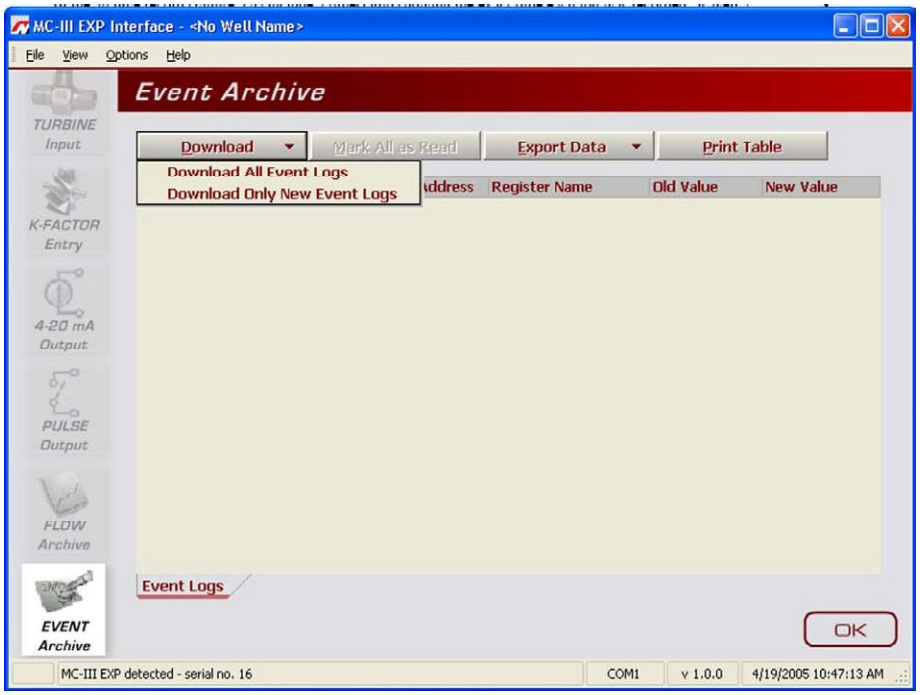

Figure 5.15—Menu for downloading event logs from Event Archive screen

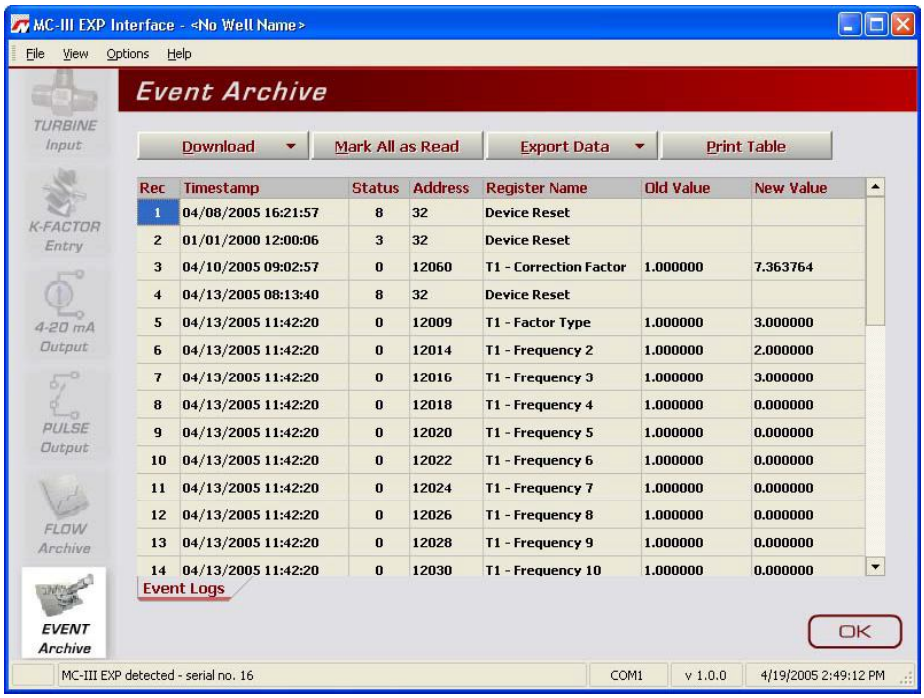

Figure 5.16—Downloaded event logs

Printing/Saving a Report

To print an event log, press the "Print Table" button in the upper right corner of the Event Archive screen. A Print Preview screen will appear, displaying the image to be printed.

To print the report, select File>Print from the task bar.

To save the report, perform the following steps:

1. Select File>Save from the task bar. A "Save Report As" window will open.
2. Enter a filename. The filename extension will be .rps.
3. Click "Save." By default, log archive reports are saved in C:\NuFlo log data\MC-III\<WELL NAME>, however the user can specify a new location, if desired.The "wellname" folder will bear the well name that appears on the Wellsite Information screen. If no well name is entered on this screen, the folder will be named "NO_WELLNAME."

The procedure for printing and saving an event log report is nearly identical to the procedure for printing and saving a flow log report. See the flow log screen captures, *pages 77 and 78*, for reference.

Exporting Event Logs

Event logs can be directly exported to an .xls or .csv file for ease in viewing and distributing. To export a file, perform the following steps:

1. Click the "Export Data" button near the top of the Event Archive screen and select the .xls or .csv format (*Figure 5.17, page 84*.
2. When the "Export Event Logs..." window appears, click "Save." By default, exported logs are saved in C:\NuFlo log data\MC-III\<WELL NAME>, however the user can specify a new location, if desired. The "wellname" folder will bear the well name that appears on the Wellsite Information screen. If no well name is entered on this screen, the folder will be named "NO_WELLNAME."

Important: **Users can also specify the file format to be used for all auto-save logs (.csv or .xls). To change the auto-save format, follow the procedure described in** *Downloading Options, page B-5*.

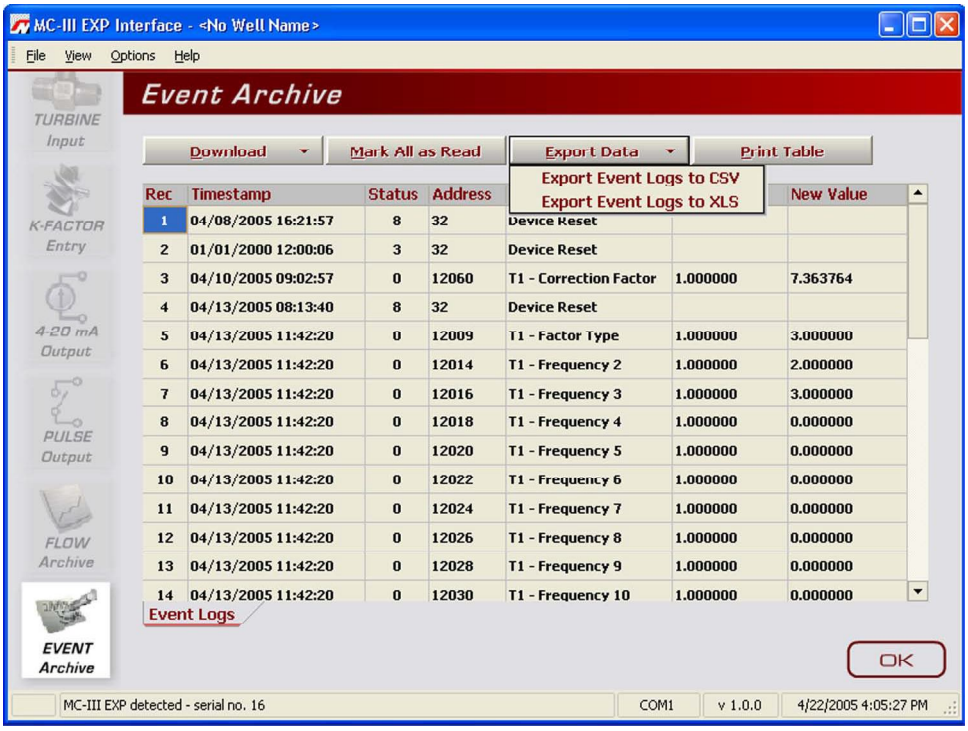

Figure 5.17—Dropdown menu for exporting log data

Section 6 - MC-III EXP Maintenance

The MC-III™ EXP is designed to provide many years of service with minimal maintenance. Batteries require periodic replacement, and battery life depends on whether battery power is the primary or secondary power source.

All configuration settings are stored in nonvolatile memory; therefore, configuration settings will not be lost in the event of battery failure.

The circuit assembly or keypad may also require replacement over the life of the instrument. Procedures are provided in this section.

Lithium Battery Replacement

The MC-III EXP uses a lithium battery with a life expectancy of approximately 2 years. Due to the flat discharge characteristics of the lithium battery, it is difficult to determine how much life remains in a battery at any given time. To preserve configuration and accumulated volume data, replace the battery at 2-year intervals.

WARNING: CSA-APPROVED DEVICE. To prevent ignition of hazardous atmospheres, do not remove the cover unless the area is void of combustible gas and vapors. Replace the battery pack only with battery part number 9A-100005111.

WARNING: ATEX-APPROVED DEVICE. To prevent ignition of hazardous atmospheres, do not remove the cover unless the area is void of combustible gas and vapors. Replace the battery pack only with battery part number 9A-90099000.

WARNING: The lithium battery that powers the MC-III EXP is a sealed unit; however, should a lithium battery develop a leak, toxic fumes could escape upon opening the enclosure. Ensure that the instrument is in a well-ventilated area before opening the enclosure to avoid breathing fumes trapped inside the enclosure. Exercise caution in handling and disposing of spent or damaged batteries. See additional information on lithium batteries in *Appendix C, page C-1* of this manual.

Important: Press the ENTER/SAVE key on the keypad before replacing the lithium battery to save the accumulated total to nonvolatile memory. Once the battery is replaced and power is restored to the unit, the last saved accumulated total will be displayed in the LCD.

The lithium battery is secured inside the enclosure by a velcro strap and connected to a connector (J1) near the top of the circuit assembly.

To replace a lithium battery in the MC-III EXP, perform the following steps:

1. Unscrew the cover of the enclosure counter-clockwise until it separates from the main body of the enclosure.
2. Using a small standard blade screwdriver, remove the two #4-40 × 7/8” screws located to the right and left side of the display (*Figure 6.1, page 86*).

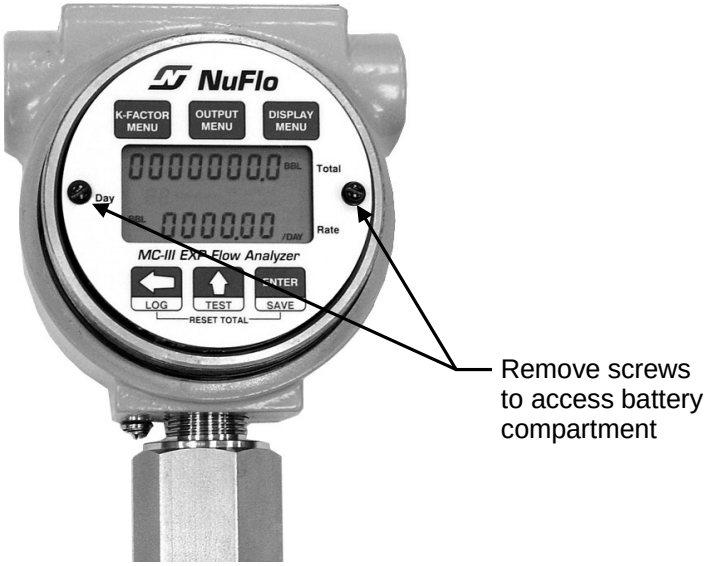

Figure 6.1— Removal of faceplate/keypad assembly

3. Lift the display/keypad assembly from the enclosure, making sure the circuit assembly does not contact the enclosure.

4. Loosen the velcro strap, disconnect the battery from the J1 connector on the circuit assembly, and remove the battery from the enclosure (Figure 6.2).

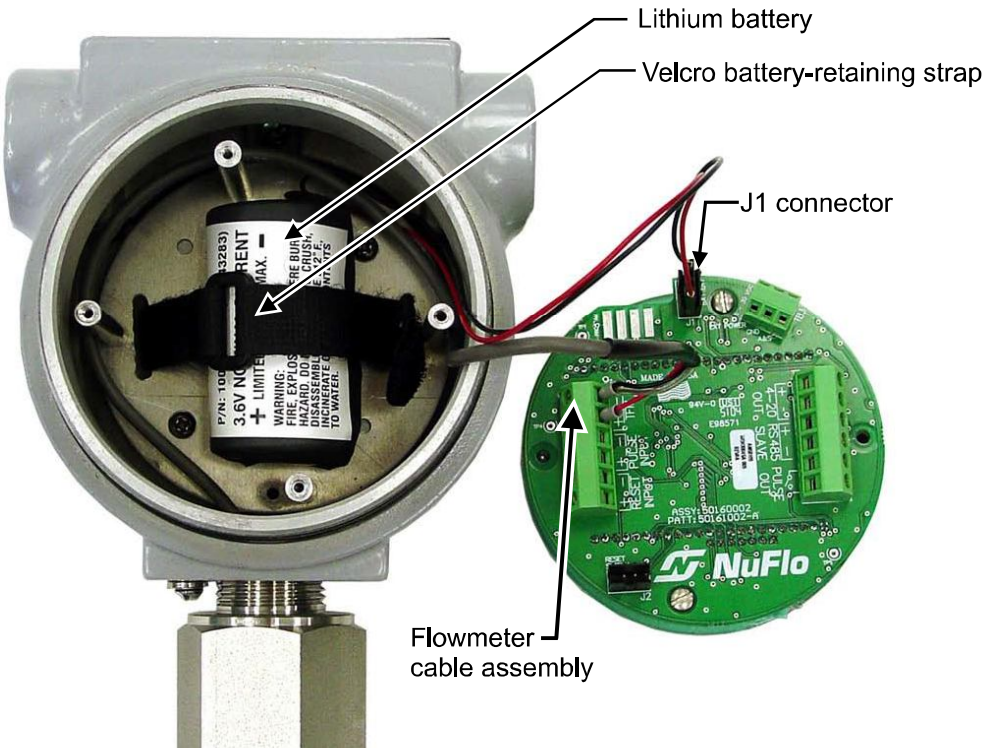

Figure 6.2— Removal/replacement of lithium battery

5. Install the new battery in the enclosure in the same position as the original battery, and secure the Velcro tightly around the battery.
6. Connect the replacement battery to the J1 connector.
7. Place the circuit assembly over the standoffs and fasten with the two #4-40 × 7/8" screws, ensuring that all connector wiring is inside the enclosure.
8. Replace the enclosure cover, threading it onto the enclosure in a clockwise direction.

Important: The interruption of power to the MC-III EXP will cause the internal clock time to be inaccurate. Reset the time via the interactive software. See *Time/Date Synchronization, page 54.*

Alkaline Battery Replacement

The alkaline battery pack will require periodic replacement. The dimming of the LCD may be an indicator that battery power is diminishing, and the battery pack should be replaced.

WARNING: To prevent ignition of hazardous atmospheres, do not remove the cover while circuits are alive. Under normal conditions, the MC-III EXP poses no hazard when opened in a safe area. Replace the battery pack only with battery pack part number 9A-30099007.

Important: Press the ENTER/SAVE key on the keypad before replacing the alkaline battery to save the accumulated total to nonvolatile memory. Once the battery is replaced and power is restored to the unit, the last saved accumulated total will be displayed in the LCD.

The shrink-wrapped alkaline battery pack is secured inside the MC-III EXP enclosure by a Velcro strap and connected to a connector (J1) near the top of the circuit assembly.

To replace the battery pack, perform the following steps:

1. Unscrew the cover of the enclosure counter-clockwise until it separates from the main body of the enclosure.
2. Using a small standard blade screwdriver, remove the two #4-40 × 7/8" screws located to the right and left side of the display (*Figure 6.3, page 88*).

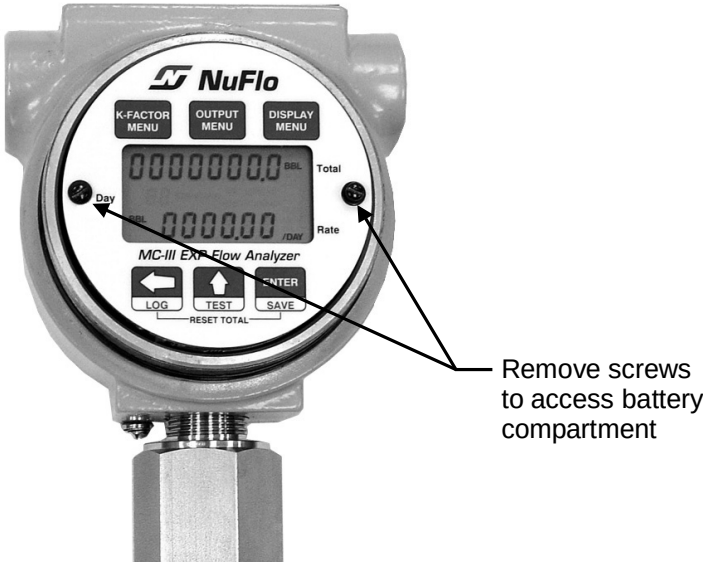

Figure 6.3—Removal of faceplate/keypad assembly

3. Lift the display/keypad assembly from the enclosure.
4. Loosen the Velcro strap, disconnect it from the J1 connector on the circuit assembly, and remove the battery from the enclosure (Figure 6.4).

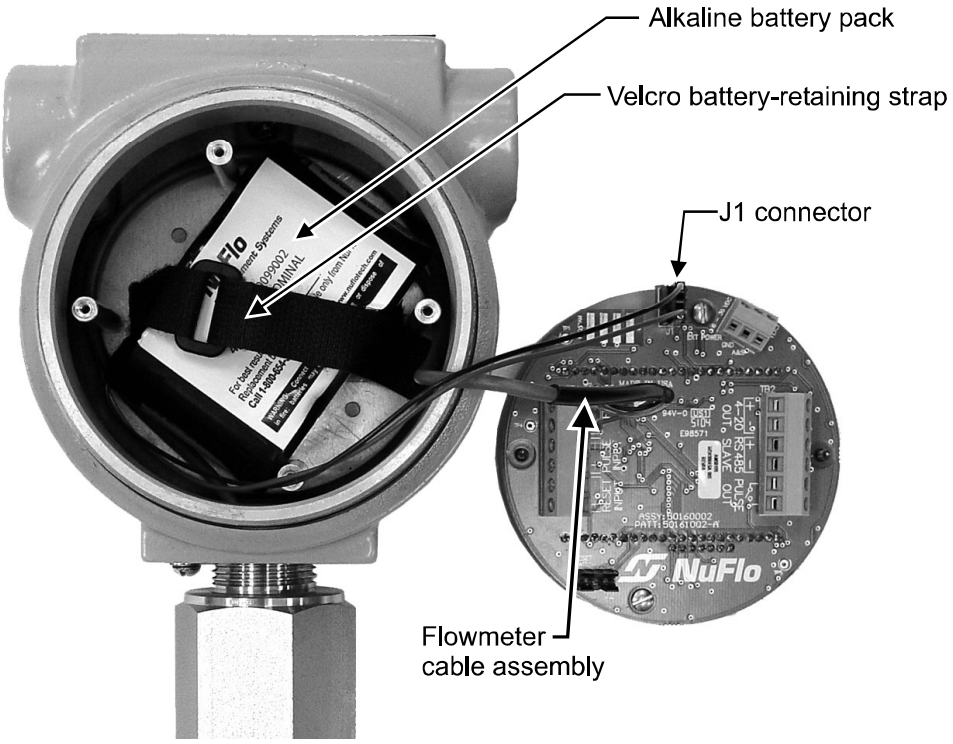

Figure 6.4—Removal/replacement of alkaline battery pack

5. Install the new shrink-wrapped battery pack in the same position as the original battery pack as shown in *Figure 6.4, page 88* and secure the Velcro strap to hold the pack tightly in place.
6. Connect the replacement battery pack to the J1 connector.
7. Place the circuit assembly over the standoffs and fasten with the two #4-40 × 7/8" screws, ensuring that all connector wiring is inside the enclosure.
8. Replace the enclosure cover, threading it onto the enclosure in a clockwise direction.

Important: The interruption of power to the MC-III EXP will cause the internal clock time to be inaccurate. Reset the time via the interactive software. See *Time/Date Synchronization, page 54.*

Circuit Assembly Replacement

⚠ **WARNING: To prevent ignition of hazardous atmospheres, do not remove the cover while circuits are alive. Under normal conditions, the MC-III EXP poses no hazard when opened in a safe area.**

Important: Static electricity can damage a circuit board. Handle new boards only by their edges, and use proper anti-static techniques (such as wearing anti-static wrist strap or touching metal to establish an earth ground) prior to handling a board.

Important: If possible, record the accumulated total and all configuration settings before replacing the circuit board. This information can be recorded by hand or captured by saving a configuration file that can be reloaded into the unit after the circuit board is replaced. (See *Saving and Uploading Configuration Files, page 69***)**

To replace the circuit assembly, perform the following steps:

1. Unscrew the cover of the enclosure counter-clockwise until it separates from the main body of the enclosure.
2. Using a small standard blade screwdriver, remove the two #4-40 × 7/8" screws located to the right and left side of the display.
3. Lift the display/keypad assembly from the enclosure.
4. Record the locations of all cable connections to the circuit assembly.
5. Using a small standard blade screwdriver, remove all wiring from terminal blocks TB1, TB2, and TB3, and J2, ensuring that all wiring that is connected to powered circuits is insulated with tape.
6. Unplug the battery cable from connector J1 on the circuit assembly.
7. Remove the two #4-40 × 5/16" screws fastening the circuit assembly to the keypad assembly (*Figure 6.5, page 90*.

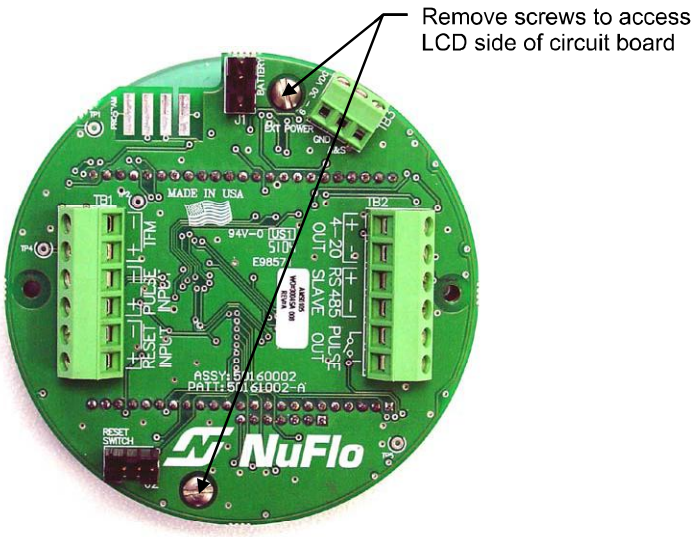

Figure 6.5—Disassembly of circuit board/keypad assembly

8. Disconnect the keypad ribbon cable from the J3 connector on the LCD side of the circuit assembly as follows:

   a. Grasp the black clip between a thumb and forefinger (see white arrows in Figure 6.6 below).

   b. Squeeze both sides of the clip and gently pull to release the clip from the plastic connector that holds it in place. DO NOT PULL on the ribbon cable. When the black plastic clip is properly disengaged, the cable will release freely.

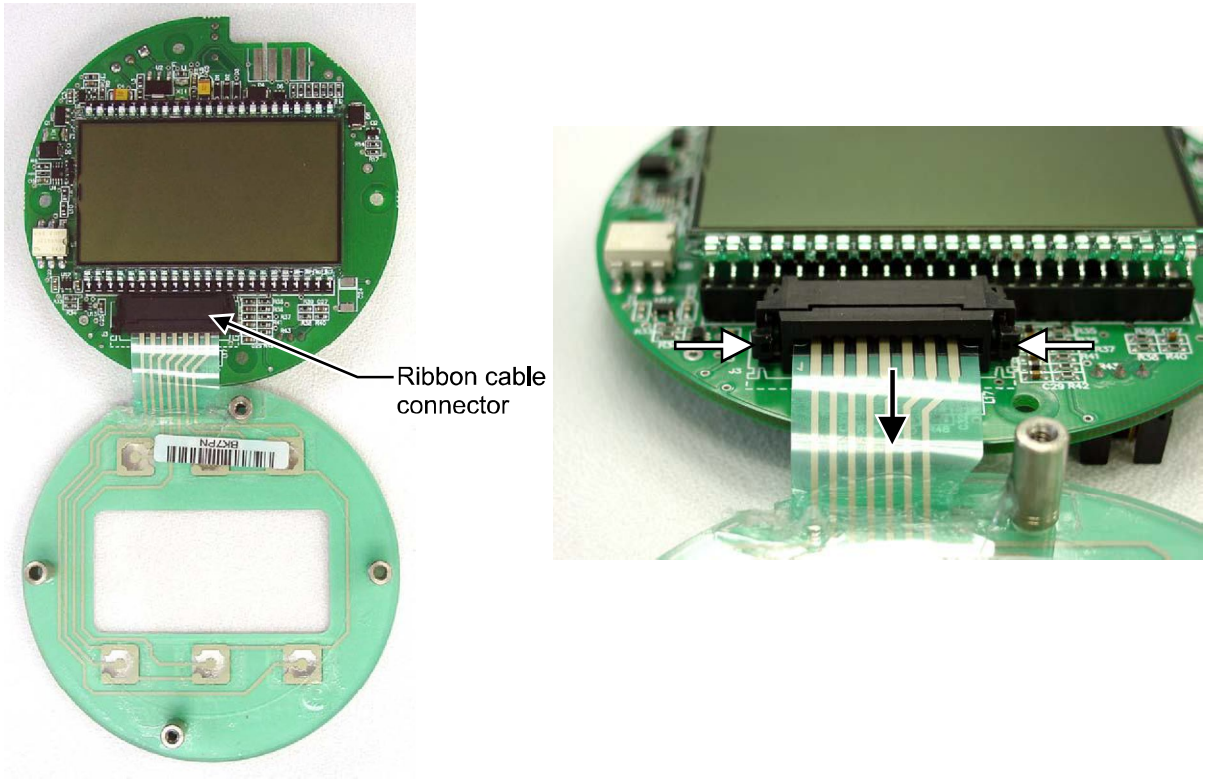

Figure 6.6—To release the ribbon cable from the connector, press in on the side tabs of the connector (white arrows) and gently pull forward (black arrow).

9. Remove the original circuit assembly from the enclosure.
10. Connect the ribbon cable of the keypad to the J3 connector on the LCD side of the circuit assembly as follows:
    a. Insert the end of the ribbon cable into the plastic clip.
    b. While holding the ribbon cable in place, press the black plastic clip into the connector until it snaps.
11. Mount the circuit assembly to the keypad with the two #4-40 × 5/16" screws.
12. Reconnect the battery cable to J1 on the circuit assembly.
13. Reconnect all wiring to terminal blocks TB1, TB2 and TB3 (and J2, if applicable).
14. Mount the display/keypad assembly to the enclosure with the two #4-40 × 7/8" screws.
15. Recalibrate the MC-III EXP, then replace the enclosure cover.
16. Re-establish power to the peripheral circuitry.

Keypad Replacement

WARNING: To prevent ignition of hazardous atmospheres, do not remove the cover while circuits are alive. Under normal conditions, the MC-III EXP poses no hazard when opened in a safe area.

To replace the keypad of the MC-III EXP, perform the following steps:

1. Unscrew the cover of the enclosure counter-clockwise until it separates from the main body of the enclosure.
2. Using a small standard blade screwdriver, remove the two #4-40 × 7/8" screws located to the right and left side of the display.
3. Lift the display/keypad assembly from the enclosure.
4. Remove the two #4-40 × 5/16" screws fastening the circuit assembly to the keypad (*Figure 6.5, page 90*.
5. Disconnect the keypad ribbon cable from the J3 connector on the LCD side of the circuit assembly as follows:
    a. Grasp the black clip between a thumb and forefinger (see white arrows in *Figure 6.6, page 90*.
    b. Squeeze both sides of the clip and gently pull to release the clip from the plastic connector that holds it in place. DO NOT PULL on the ribbon cable. When the black plastic clip is properly disengaged, the cable will release freely.
6. Remove the circuit assembly.
7. Connect the ribbon cable of the keypad to the J3 connector on the LCD side of the circuit assembly as follows:
    a. Insert the end of the ribbon cable into the plastic clip.
    b. While holding the ribbon cable in place, press the black plastic clip into the connector until it snaps.
8. Mount the circuit assembly to the keypad with the two #4-40 × 5/16" screws.

9. Mount the display/keypad assembly to the enclosure with the two #4-40 × 7/8" screws.

10. Recalibrate the MC-III EXP if necessary and replace the enclosure cover.

Firmware Update

Before installing new firmware or moving the instrument to a new site, it is recommended that the user clear the EEPROM, which will erase all configuration settings and log data. To clear the EEPROM, choose Options/Program Options from the menu bar, select Advanced from the dropdown options list, and click on the "Clear EEPROM" button (Figure 6.7).

Technical assistance is typically required for upgrading firmware. Contact Cameron's Measurement Systems Division to arrange an upgrade.

⚠ WARNING: Clicking the "Clear EEPROM" button will delete all configuration settings and log records in the MC-III EXP memory.

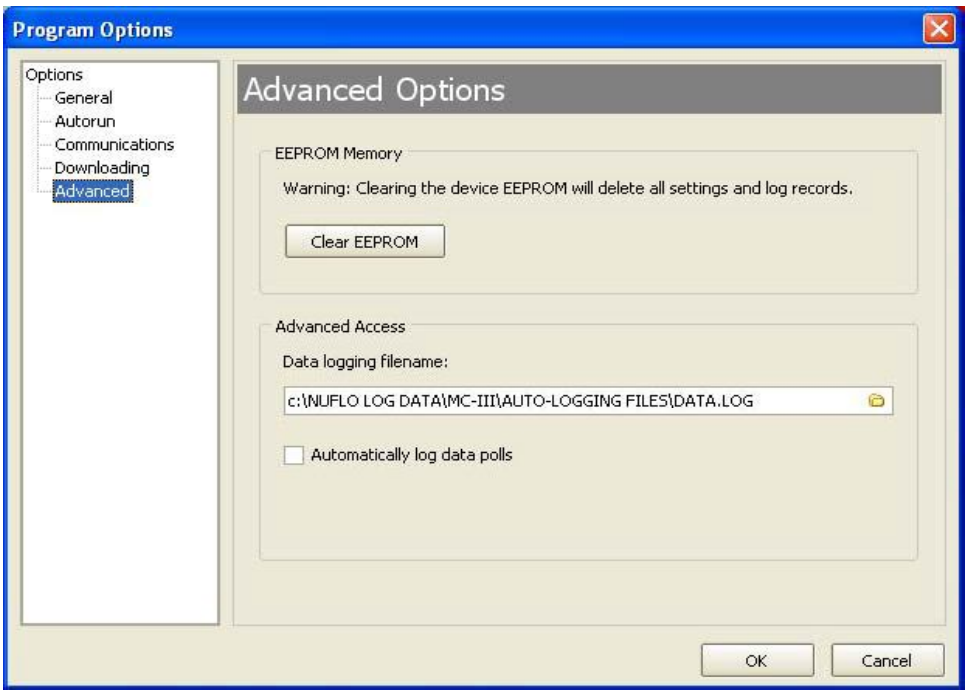

Figure 6.7—EEPROM clearing and automatic data log option

MC-III Parts List (CSA)

CAUTION: EXPLOSION HAZARD—SUBSTITUTION OF COMPONENTS MAY IMPAIR SUITABILITY FOR CLASS I, DIVISION 1 IN THE UNITED STATES AND CANADA. USE OF SPARE PARTS OTHER THAN THOSE IDENTIFIED BY CAMERON VOIDS CSA CERTIFICATION. CAMERON BEARS NO LEGAL RESPONSIBILITY FOR THE PERFORMANCE OF A PRODUCT THAT HAS BEEN SERVICED OR REPAIRED WITH PARTS THAT ARE NOT AUTHORIZED BY CAMERON.

Quantity	Part Number	Description
1	9A-30166003	Assembly, Switchplate
1	9A-50160002	Circuit Assembly
1	9A-90017002	Cable Assembly, Flowmeter
1	9A-100005111	Battery - Lithium, 3.6 V (CSA-approved units only)
1	9A-50099002	Battery Pack, Alkaline (3 “C”), Shrink-wrapped (CSA-approved units only)
1	9A-100002605	Desiccant Packet
1	9A-30054001	Assembly, Explosion-Proof Reset/Control Switch, with Extension, Fits ¾ in. Female Pipe Thread, for Standard Enclosure, CSA
1	9A-50053008	Assembly, Reset Switch, Explosion-Proof, for Alternate Enclosure (Red Rim on Cover), CSA
1	9A-50053009	IS Barrier, RS-485, CSA
1	9A-90017004	Cable Assembly, 3/4 in. NPT Explosion-Proof Union, 2-Pin Connector, 10 in., for External RS-485 Communications, CSA
1	2296692-01	Kit, Cable Assembly, USB, Software Driver CD
1	9A-101283116	Converter, RS-485 to RS-232, 9-Pin, with 20-ft Cable
1	2296650-01	Converter, RS-485 to USB, Port-Powered, with 20-ft Cable
1	9A-100017622	Union, 1-in.
1	9A-30028004	Kit, Pole Mount, Plated Steel
1	9A-30028005	Kit, Pole Mount, Stainless Steel
1	9A-50074001	Assembly, Installation Software CD and CD Pocket Folder, MC-III
1	9A-50165003	Manual, User
1	2296694-01	Manual, Quick-Start
1	9A-50053010	Control Drawing, Intrinsically Safe RS-485 Connection, MC-III EXP

MC-III Parts List (ATEX)

CAUTION: EXPLOSION HAZARD—SUBSTITUTION OF COMPONENTS MAY IMPAIR SUITABILITY FOR ATEX AND IECEX APPROVALS. USE OF SPARE PARTS OTHER THAN THOSE IDENTIFIED BY CAMERON VOIDS ATEX/IECEX CERTIFICATION. CAMERON BEARS NO LEGAL RESPONSIBILITY FOR THE PERFORMANCE OF A PRODUCT THAT HAS BEEN SERVICED OR REPAIRED WITH PARTS THAT ARE NOT AUTHORIZED BY CAMERON.

Quantity	Part Number	Description
1	9A-30166003	Assembly, Switchplate
1	9A-50160002	Circuit Assembly
1	9A-90017005	Cable Assembly, Flowmeter, ATEX
1	9A-90099000	Battery, Lithium, Intrinsically Safe, Current Limited, ATEX
1	9A-100002605	Desiccant Packet
1	9A-30054002	Assembly, External Explosion-Proof Reset/ Control Switch, with Extension, Fits 3/4 in. Female Pipe Thread, ATEX
1	9A-90017008	Cable Assembly, 3/4 in. NPT Explosion-Proof Brass Union, 2-Pin Connector, 10 in., for External RS-485 Communications, ATEX
1	9A-101283116	Converter, RS-485 to RS-232, 9-Pin, with 20-ft Cable
1	9A-30025001	Tube, Standoff, Stainless Steel, for Barton 7000 Series Turbine Meters,1.18 in. Hex X 3.56 in. long with 3/4 in. NPT Male & Female Ends, ATEX *
1	9A-30025006	Tube, Standoff, Stainless Steel, for NuFlo Turbine Meters, 4.00 in. long with 3/4 in. NPT Male & 1 in. NPT Female Ends, ATEX *
1	9A-30028004	Kit, Pole Mount, Plated Steel
1	9A-30028005	Kit, Pole Mount, Stainless Steel
1	9A-50074001	Assembly, Installation Software CD and CD Pocket Folder, MC-III
1	9A-50165003	Manual, User
1	2296694-01	Manual, Quick-Start

* Standoff tube adapters are available in lengths up to 18 inches on request.

Appendix A—MC-III EXP Hardware Options

Explosion-Proof Reset/Control Switch

An external explosion-proof reset/control switch (Figure A.1) allows the user to zero the total and manually select which parameter is displayed on the LCD and view daily logs instantaneously without removing the instrument cover or connecting the instrument to a laptop computer.

Caution: This switch is available in two models. The CSA-approved model has a stainless steel adapter, and the ATEX-approved model has a brass adapter.



Figure A.1—Explosion-proof reset/control switch (CSA-approved stainless steel adapter shown)

The reset/control switch assembly mounts in either threaded conduit opening in the instrument housing.

The CSA-approved assembly is available in two variations for use with the standard enclosure shown above, and the alternate enclosure shown in *Figure 2.6, page 18.* The alternate enclosure is identified by a red ring around the face of the cover. Both parts are included in the *MC-III Parts List (CSA), page 93.*

Installation

If the switch is ordered with an MC-III, it will be installed prior to shipment.

To add a switch to an existing MC-III, connect the leads to connector J2 on the main circuit board (*Figure A.2, page A-2)*.

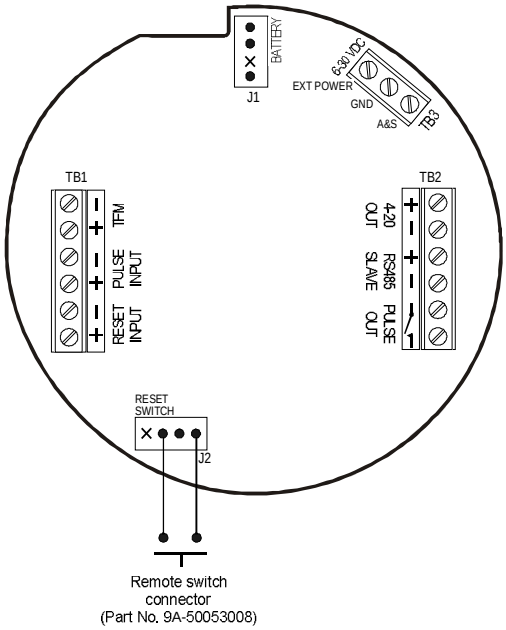

Figure A.2—Explosion-proof switch wiring

Operation

Zeroing the Total. To reset the volume total with an explosion-proof switch, press and hold the switch for at least 3 seconds, then release it.

Important: When resetting the volume total with the explosion-proof reset switch, do not release the switch prematurely. Releasing the switch too quickly (before 3 seconds have passed) will activate the daily log view function and WILL NOT reset the volume to zero.

Viewing Daily Logs. To view daily logs with the explosion-proof switch, press and release the switch. (Do not depress the switch for more than 1 second.) The words "Daily Volume Archive" will scroll across the bottom of the LCD and the day index (Figure A.3) will display "01." The daily flow total recorded at the last contract hour will appear at the top of the LCD.

The index number represents the number of days previous to the current date. For example, totals from two days previous are read by pressing the switch until "02" appears in the Day index field of the display.

Subsequent press-and-release actions increment the daily index, allowing the user to select a specific daily total.

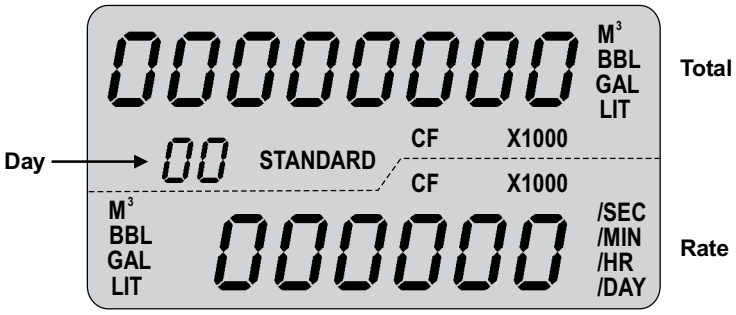

Figure A.3—Daily index (Day) displays

Additionally, when the log viewing function times out, the accumulated total is automatically saved to memory.

Saving the Total. When the daily log display times out, the MC-III EXP will automatically save the accumulated total.

Explosion-Proof Communications Adapter

The explosion-proof communications adapter provides an RS-485 connection for connecting a laptop or PC to the instrument without removing the instrument cover. When the adapter is ordered with an MC-III EXP, it is factory installed. The installed adapter is comprised of an RS-485 adapter socket, a blanking plug, and a union nut (Figure A.4). It may be relocated to either conduit opening in the instrument housing.

Caution: This adapter is available in two models—a plated steel CSA-approved model and a brass ATEX-approved model.

An RS-232 to RS-485 converter cable (available from Cameron's Measurement Systems Division) is required for connecting the adapter to a laptop computer. See *MC-III Parts List (CSA), page 93,* and *MC-III Parts List (ATEX), page 94,* for converter cable options.

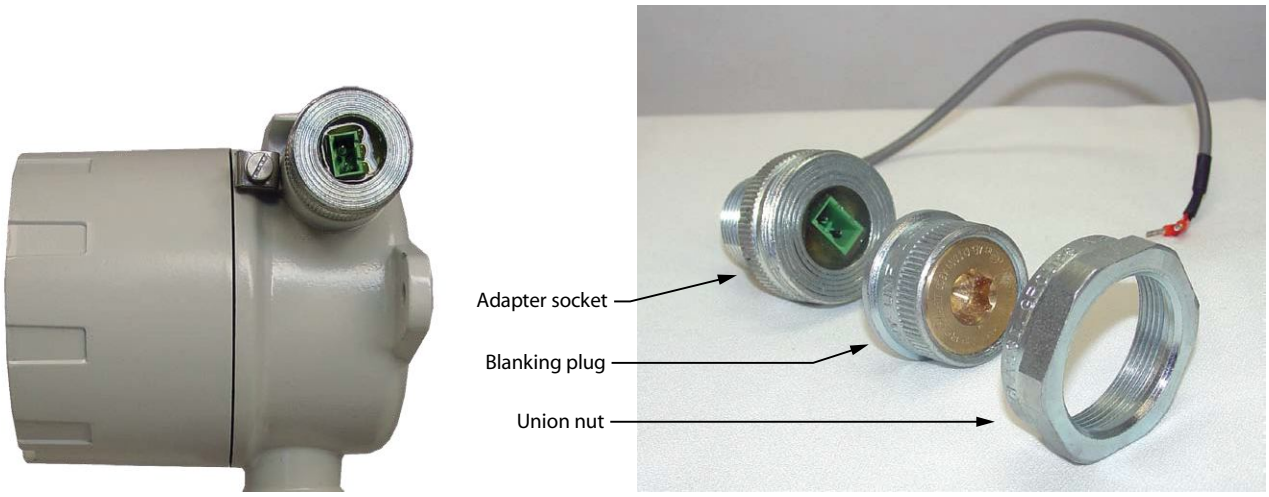

Figure A.4—Components of explosion-proof communications adapter

Assembly of the Plug Connector

A plug connector that mates with the RS-485 adapter socket is shipped with the device (uninstalled). This plug connector should be wired to an RS-485 converter cable as shown in *Figure A.5, page A-4,* and stored with the cable when the COM adapter is not in use.

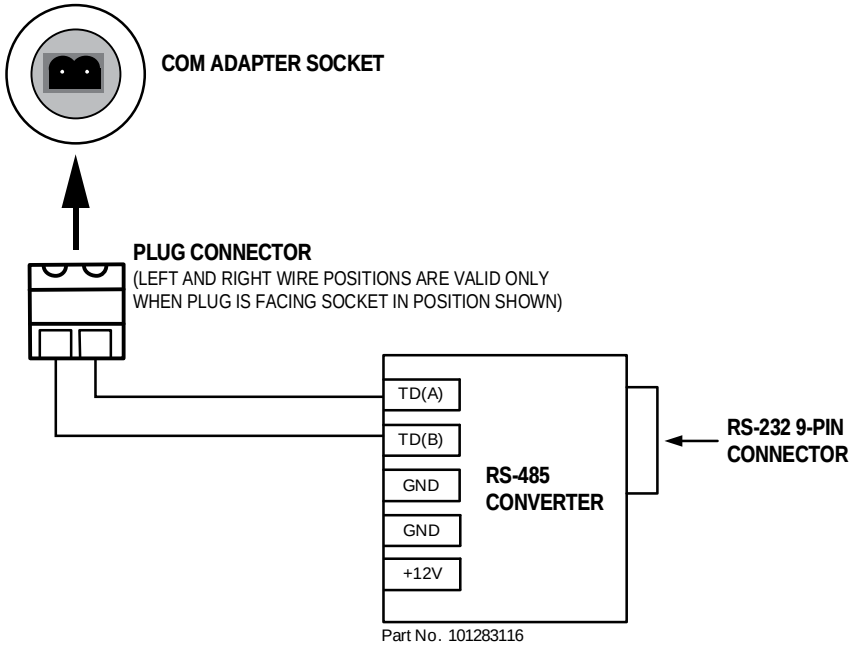

Figure A.5—Wiring of plug connector to 9-pin RS-232 to RS-485 converter cable, Part No. 9A-101283116

Connecting to the Communications Adapter

Take the following precautions when disassembling the communications adapter.

WARNING: When a hazardous area is present, ensure the union nut and blanking plug are properly fitted in the conduit opening. The explosion-proof rating applies only when the union nut and blanking plug are secured in place. When the union is broken, the device is no longer explosion-proof.

WARNING: Before disassembling the union nut and blanking plug, make sure the area is non-hazardous.

To connect a PC or laptop to the communications adapter, perform the following steps:

1. Unscrew the union nut to expose the connector socket shown in *Figure A.4, page A-3.* (A blanking plug will be removed with the union nut. Store the union nut and blanking plug in a safe place. They will need to be reinstalled when the adapter is not in use.)
2. Wire the plug connector to an RS-485 converter cable, if it is not already attached (Figure A.5).
3. Insert the plug connector into the adapter socket.
4. Connect the converter cable to the PC or laptop.

Disconnecting the Communications Adapter

To disconnect the adapter, perform the following steps:

1. Remove the plug connector (with converter cable attached) from the socket.
2. Place the blanking plug inside the union nut (removed in step 1).
3. Screw the union nut onto the union half to cover the socket. Hand-tighten to ensure a snug connection.

Important: Do not disconnect the plug connector from the RS-232 to RS-485 converter cable when it is not in use. For best results, store the plug connector with the converter cable.

Installation of Adapter (when purchased separately from an MC-III EXP)

WARNING: If the communications adapter is ordered separately from the MC-III EXP Flow Analyzer, the conduit openings in the enclosure will be sealed with brass or stainless steel plugs. Do not remove the plug from the enclosure to install the adapter unless the area is known to be non-hazardous.

To install a communications adapter purchased separately from an MC-III EXP, perform the following steps:

1. Thread the cable of the adapter through a conduit opening in the instrument housing and screw the adapter into place.
2. Connect the adapter cable to the RS-485 port on the MC-III EXP main circuit board (Figure A.6).
3. Connect the plug connector to an RS-485 converter cable (*Figure A.5, page A-4*) if applicable.

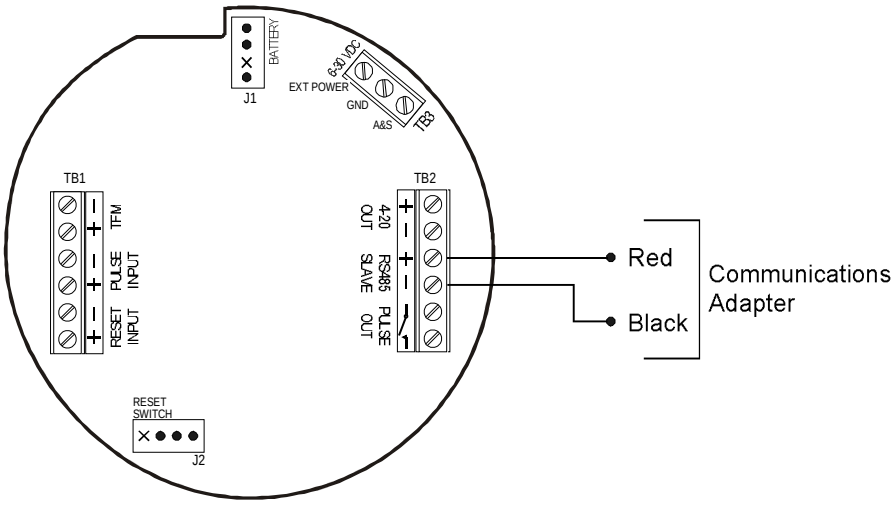

Figure A.6—Circuit board connection for communications adapter

USB Communications Adapter

The NuFlo™ USB Adapter (Figure A.7) allows a user to connect a computer to the MC-III using a standard off-the-shelf USB connector cable for quick and easy downloads without opening the MC-III enclosure.

Caution: **This adapter is CSA-approved for use in hazardous areas. It does not have ATEX/IECEX approval.**

The USB adapter is comprised of a USB adapter socket, a blanking plug, and a union nut (Figure A.8). A CD includes the software for installing the driver.

When the USB connection is ordered with an MC-III, the USB adapter is pre-installed at the factory. No field wiring is required. If the USB adapter is purchased as a kit, see *Adapter Kit Installation, page A-7,* for installation instructions.

Important: **Do not connect the USB adapter to a computer until a USB driver is installed using the CD provided. MC-III software cannot connect to an MC-III without these files. See** *Using the Adapter, page A-7.*



Figure A.7—NuFlo USB adapter



Figure A.8—NuFlo USB adapter components

User-Supplied Hardware

To connect the USB adapter to an MC-III using MC-III software, a user-supplied universal serial bus USB A/B cable is required (Figure A.9).



Figure A.9—User-supplied USB A/B cable

Using the Adapter

The MC-III software CD supplied with the NuFlo USB Adapter contains the drivers required to enable USB communications for an MC-III when the NuFlo USB Adapter is installed.

For step-by-step installation instructions, insert the CD in your computer and click the "Install USB Driver" link on the Welcome screen. The software will install the appropriate driver that is compatible with your computer's operating system.

When the software is fully installed, the adapter can be connected to the computer and used to connect to the MC-III via MC-III software (Tools/Select COM Port).

WARNING: When a hazardous area is present, ensure the union nut and blanking plug are properly fitted in the conduit opening. The explosion-proof rating applies only when the union nut and blanking plug are secured in place. When the union is broken, the device is no longer explosion-proof.

WARNING: Before disassembling the union nut and blanking plug, make sure the area is non-hazardous.

Covering the Adapter

When the USB port is not in use, nest the blanking plug inside the union nut and screw the union nut onto the adapter to cover the USB socket. Hand-tighten to ensure a snug connection.

Adapter Kit Installation

If the NuFlo USB adapter is purchased as a kit, install it in the MC-III EXP according to the steps below.

The USB adapter is comprised of a USB adapter socket, a blanking plug, and a union nut (*Figure A.8, page A-6*). The blanking plug and union nut are connected to the adapter only when the USB port is not in use.

1. Remove the plug from a conduit opening in the MC-III EXP enclosure.
2. Thread the cable of the adapter through the conduit opening and screw the adapter into place.

3. Connect the adapter cable to the RS-485 port on the MC-III EXP main circuit board (*Figure A.6, page A-5*).
4. Connect the plug connector to an RS-485 converter cable (*Figure A.5, page A-4*), if applicable (black wire to negative terminal).

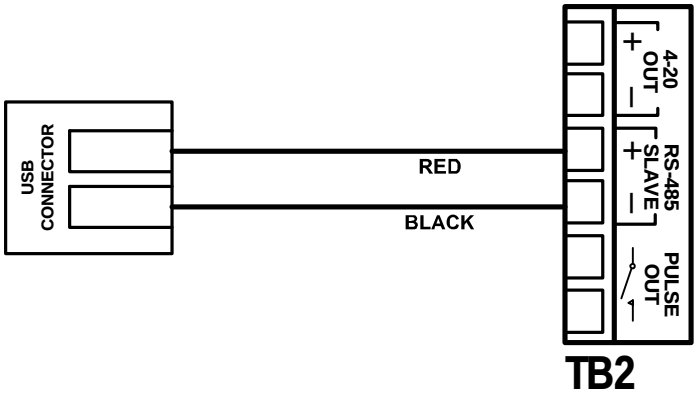

Figure A.10—Wiring of NuFlo USB adapter (required only when purchased as a kit)

5. If the USB port will not be used immediately, nest the blanking plug inside the union nut and screw the union nut onto the adapter to cover the USB socket. Hand-tighten to ensure a snug connection.

Important **Before using the USB adapter for the first time, it is necessary to install a USB driver on the computer used to run MC-III software. The driver is supplied on the MC-III software CD provided with the USB adapter kit. For step-by-step installation instructions, insert the CD in your computer and click the "Install USB Driver" link on the Welcome screen. The software will install the appropriate driver that is compatible with your computer's operating system.**

Appendix B—Software Program Options

In addition to the standard configuration and flow log menus, the MC-III™ interface software includes a Program Options menu that allows users to customize the way the software functions, handles log data, and communicates.

To access the Program Options menu, select Options in the menu bar; Program Options is the last entry in the dropdown list (Figure B.1).

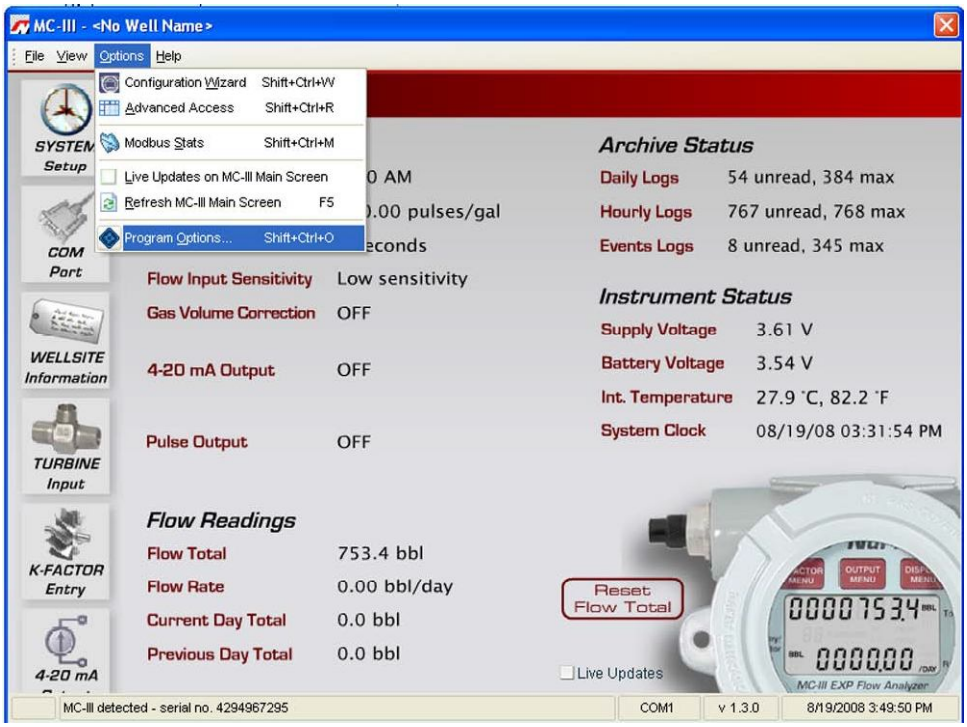

Figure B.1—Program Options menu location

General Options

The General Options screen allows a user to change the threshold setting used to generate a user prompt for synchronizing the internal clock with the time displayed on the user's computer.

The MC-III EXP includes a real-time clock for timekeeping and log time stamps, and the internal time and date is preset at the factory. However, if the factory-set time and date are inaccurate for the user (for example, if the user is in a different time zone), the program will automatically detect the difference between the device's internal time and the date and the time/date displayed on the user's personal computer and prompt the user to authorize time and date synchronization.

By default, the MC-III prompts a user to synchronize the clock display if the time difference is 60 seconds or more. To change the time difference required to generate a "synchronize" prompt, enter a new threshold value (seconds) in the General Options screen (*Figure B.2, page B-2*) and click "OK."

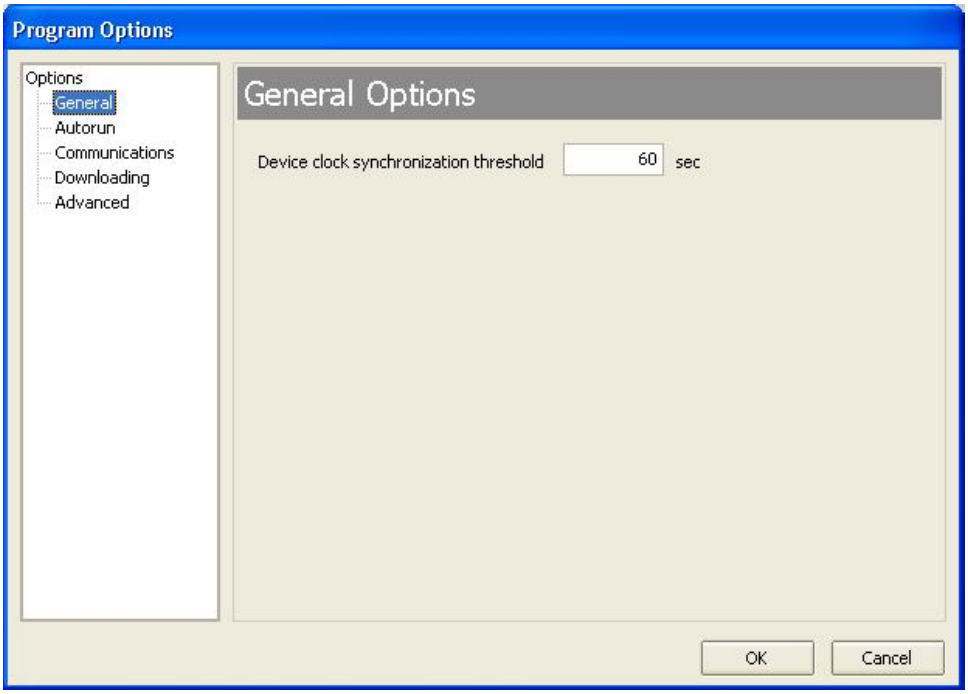

Figure B.2—Threshold setting for internal clock synchronization

Autorun Options

When the software connects with the MC-III EXP, the Device Autorun Options screen appears, prompting the user to select any of six actions, including navigating to one of three configuration screens, downloading flow and event logs, and uploading a configuration file. A checkbox at the bottom of the screen allows the user to automate the selected function each time the software connects to the instrument.

The Autorun Options screen in the Program Options menu allows a user to terminate all autorun functions, or change the autorun selection.

To change an autorun setting —that is, to initiate an autorun action, to terminate an autorun action, or to change to a different autorun action at the next connection—select Autorun from the Program Options menu (*Figure B.3, page B-3*), select the appropriate checkboxes, and click "OK." Verify that the "Always do..." checkbox is checked if the selected function is to be automated upon each software connection.

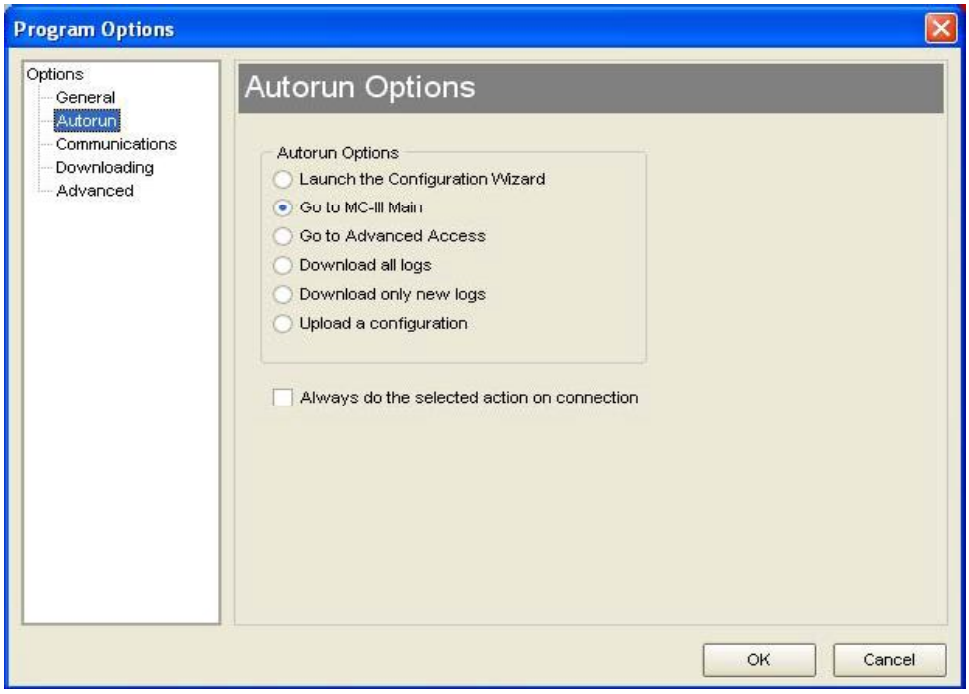

Figure B.3—Menu for changing autorun option selection

Communications Options

The Communications Options screen (Figure B.4) allows users to customize communication parameters for optimizing performance, depending on the communication path.

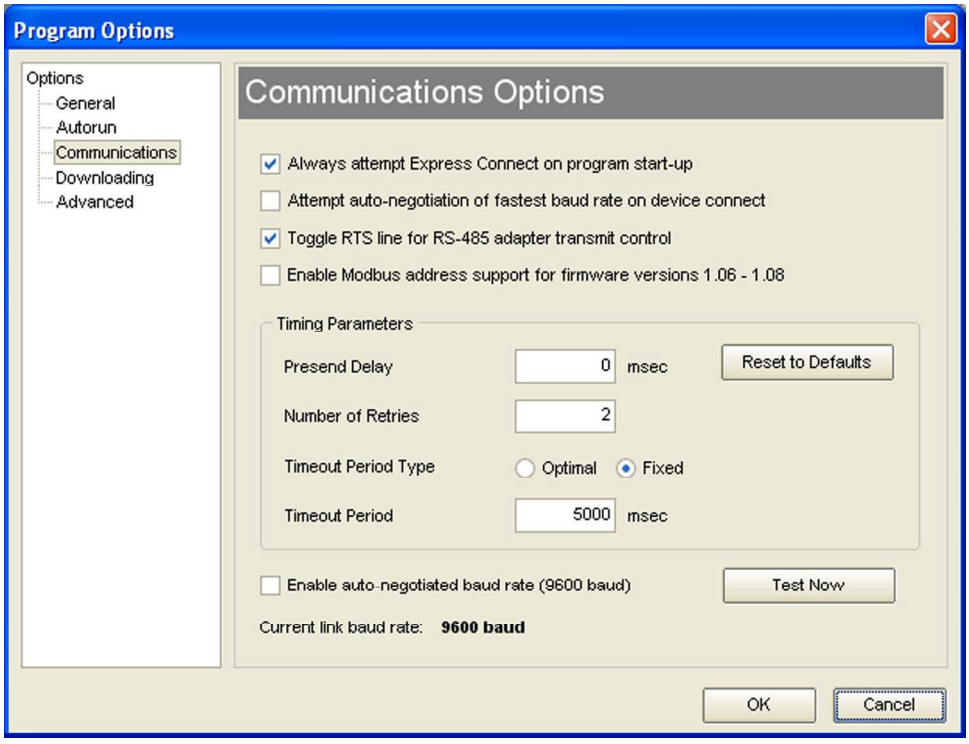

Figure B.4—Menu for changing communication parameters

Express Connect Option

By default, the MC-III interface software automatically attempts to connect to the instrument when a user clicks on the desktop application icon. This feature is controlled by the "Always attempt Express Connect on program startup" checkbox setting in the Communications Option screen (*Figure B.4, page B-3*).

When multiple devices are daisy-chained together in a network, the "express connect" function can interfere with the user's ability to connect to a specific device. To disable the Express Connect function, deselect the "Always attempt..." checkbox and click "OK." The software will now attempt to connect with the instrument only when the user clicks on the LCD image on the Welcome screen or selects File>Express Connect. For more information, see *Software Connection in Multi-Device Network, page 43*.

To cancel the "express connect" function without disabling the autorun option, the user can toggle between connect/disconnect by clicking in the LCD area of the device on the Welcome screen.

Auto-Negotiate Option

When connected devices are capable of switching baud rates automatically or when devices are directly connected to an MC-III EXP, a user may configure the MC-III interface to automatically negotiate the fastest baud rate during device connection. This "negotiated" baud rate does not replace the configured baud rate, but rather provides a temporary boost of baud rate while the computer is connected to the device for faster downloads. After the software disconnects, the device reverts to the configured baud rate.

By default, this function is disabled. To enable automatic baud rate negotiation on device connect, check the "Attempt auto-negotiation…." check box in the Communications Option screen (*Figure B.4, page B-3*) and click "OK". To initiate an immediate search for the fastest baud rate without exiting to the Welcome screen, check the "Enable auto-negotiated baud rate" checkbox, click the "Test Now" button to the right of the checkbox, and click "Yes" at the prompt in the Confirm dialog box.

Enable Auto-Negotiated Baud Rate Option

The "Enable auto-negotiated…" checkbox enables usage of the baud rate that has been automatically selected or "negotiated" by the MC-III interface, either upon connection with the instrument or when the "Test Now" button was last clicked. See also *Auto-Negotiate Option* above.

Toggle RTS Line Option

Some RS-485 to RS-232 converter modules require a request-to-send (RTS) line for switching between a "receive" and "transmit" state. This checkbox allows the software to toggle this line, ensuring that incoming data will be readily transmitted and that the converter will not stall in a "receive" mode after a period of inactivity (see *Figure B.4, page B-3)*. By default, this option is enabled. To disable the option, deselect the checkbox and click "OK."

Enable Modbus Address Support for Firmware Versions 1.06 through 1.08

Operators with MC-III units programmed with firmware versions 1.06 through 1.08 must check the checkbox labeled "Enable Modbus Address Support for Firmware Versions 1.06 through 1.08" to ensure seamless Modbus communication with their units. Operators using any other firmware version with the MC-III should leave the checkbox unchecked.

Timing Parameters

Presend Delay

On the Communications Options screen (*Figure B.4, page B-3*), a user can enter a presend delay (milliseconds) to help ensure a successful connection between the computer and the MC-III EXP when the instrument is networked with a radio or other low-speed device. The computer transmits a request to send, which turns

the device on, and then waits the specified length of time before attempting to transmit data. By default, this parameter is set to zero.

Number of Retries

By default, the computer will make two attempts to connect to the MC-III EXP before providing an error message. In situations where timeouts are anticipated—for example, due to a slow-speed computer—the user can increase the length of time allowed for a connection by inputting a larger number in the Number of Retries field. See *Figure B.4, page B-3.*

Timeout Period Type

A user can select an "optimal" timeout, which is based on the response time of the MC-III EXP to various requests for data at all baud rates during extensive testing, or a "fixed" timeout determined by the user. By default, the "optimal" period type is enabled. When a communication error occurs, the "optimal" timeout allows the software to respond much faster than the more conservative fixed timeout. The optimal setting is recommended when the software is connecting directly to the instrument. The "fixed" timeout type is recommended when data is being transmitted through a radio or other network device (serial to TCP/IP) and there are recognizable delays in the communication system. See *Figure B.4, page B-3.*

Timeout Period

When a "fixed" timeout period type is selected, the user enters the timeout period value (in milliseconds) in the Timeout Period field. When an "optimal" timeout period type is selected, the user can use this field to enter a percentage by which the "optimal" timeout period is extended. This extension can be advantageous when connecting to a slow computer. See *Figure B.4, page B-3.*

Downloading Options

The MC-III EXP automatically saves daily flow logs on the contract hour, and hourly flow logs around the clock. The instrument also automatically saves an event log each time a user change is made. By default, the logs are saved as .csv files. The Downloading Options screen (Figure B.5) allows a user to change the format of the auto-save flow logs and event logs to Excel (.xls) files.

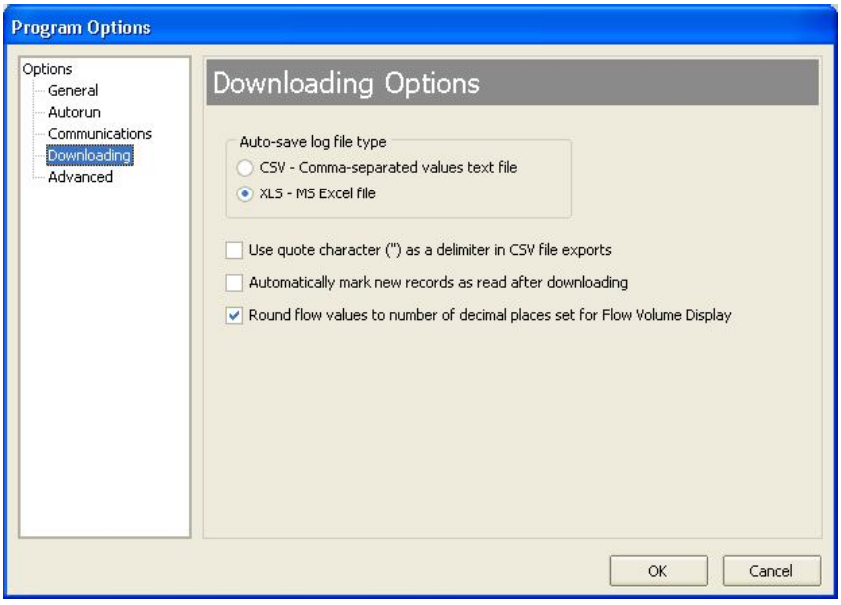

Figure B.5—Menu for changing the auto-save log file format

To save the logs in .xls format, check the "XLS-MS Excel File" checkbox (*Figure B.5, page B-5*). Additional checkboxes allow for changes in the appearance of downloaded log data.

Users can also export flow data to a .csv or .xls file as needed. For complete information, see *Exporting Flow Logs, page 80*.

Advanced Options

Clear EEPROM

The Clear EEPROM function will erase all configuration settings and log data. This task is typically performed when updating to a new firmware version or before moving the instrument to a new site. To clear the memory, click on the "Clear EEPROM" button (Figure B.6).

Technical assistance is typically required for upgrading firmware. Contact Cameron's Measurement Systems Division to arrange an upgrade.

WARNING: Clicking the "Clear EEPROM" button will delete all configuration settings and log records in the MC-III EXP memory.

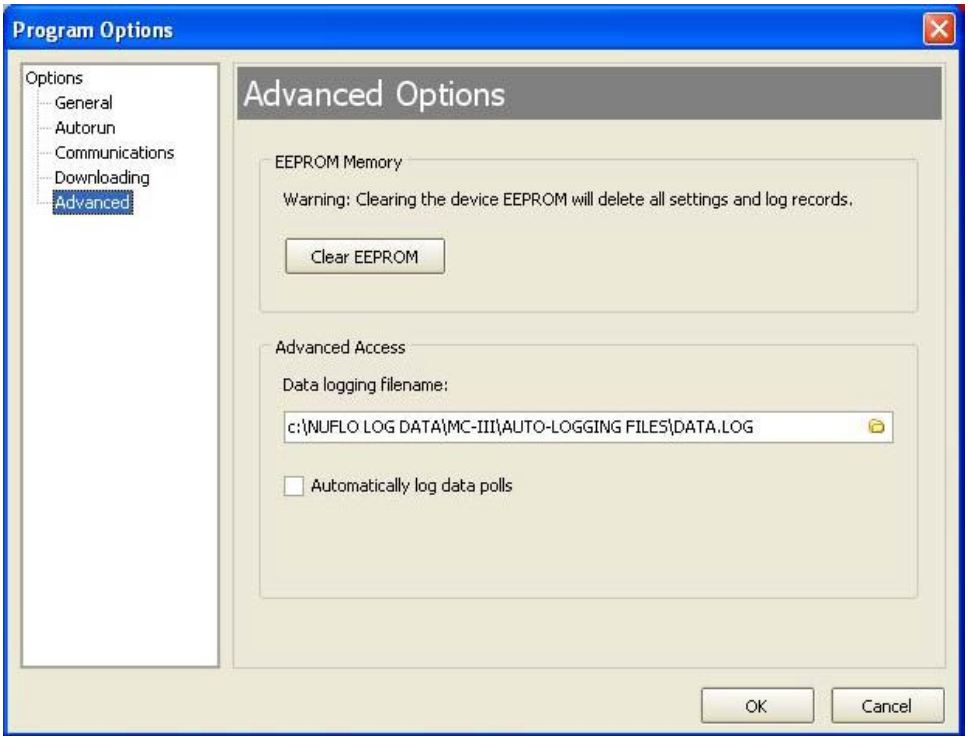

Figure B.6—Menu for clearing EEPROMs and enabling automatic data logs

Automatic Data Logging

Data retrieved from the MC-III EXP while in Advanced access mode can be logged to a file by enabling the "Automatically log data polls" checkbox on the Advanced Options screen. To specify the filename and location of the file, click the folder icon on the right of the Data logging filename field. The file will include values that are retrieved from the instrument when the user clicks the "Get All Data" button or enables "Auto Polling" on the Advanced Access screen. See also *Advanced Access, page 72*.

Appendix C—Lithium Battery Information

Lithium Battery Disposal

Once a lithium battery is removed from a device and/or is destined for disposal, it is classified as solid waste under EPA guidelines. Depleted lithium batteries are also considered to be hazardous waste because they meet the definition of Reactivity, as per 40 CFR 261.23(a)(2), (3) and (5). This document describes how the lithium reacts violently with water, forms potentially explosive mixtures with water, and when exposed to certain pH conditions, generates toxic cyanide or sulfide gases.

Federal law requires that depleted lithium batteries be sent to a fully permitted Treatment, Storage and Disposal Facility (TSDF) or to a permitted recycling/reclamation facility.

Important: **Do not ship lithium batteries to Cameron. Cameron facilities are not permitted recycling/ reclamation facilities.**

Caution: **Profiling and waste characterization procedures must be followed prior to shipping a lithium battery to a disposal site. It is the shipper's responsibility to comply with all applicable federal transportation regulations (see below).**

Transportation Information

⚠ **WARNING: The MC-III EXP™ Flow Analyzer contains lithium batteries. The internal component (thionyl chloride) is hazardous under the criteria of the Federal OHSA Hazard Communication Standard 29 CFR 1920.1200. Before shipping a lithium battery or equipment containing a lithium battery, verify that the packaging and labeling conforms with the latest version of all applicable regulations.**

The transport of the lithium batteries is regulated by the United Nations, "Model Regulations on Transport of Dangerous Goods," (special provisions 188, 230, and 310), latest revision.

Within the US the lithium batteries and cells are subject to shipping requirements under Part 49 of the Code of Federal Regulations (49 CFR, Parts 171, 172, 173, and 175) of the US Hazardous Materials Regulations (HMR), latest revision.

Shipping of lithium batteries in aircraft is regulated by the International Civil Aviation Organization (ICAO) and the International Air Transport Association (IATA) requirements in Special Provisions A45, A88 and A99, latest revision.

Shipping of lithium batteries on sea is regulated the International Maritime Dangerous Goods (IMDG) requirements in special provisions 188, 230 and 310, latest revision.

Shipping of lithium batteries on road and rail is regulated by requirements in special provisions 188, 230 and 310, latest revision.

Material Safety Data Sheet

For a link to the current MSDS for the lithium batteries used to power the MC-III EXP Flow Analyzer, see the Cameron website: *www.c-a-m.com*.

Appendix D—Communications Protocol

Firmware Version 2.03
Register Table Version 1

Introduction

The communications protocol for the MC-III is in accordance with Modicon, Inc. RTU Mode Modbus® as described in *Modicon Modbus Protocol Reference Guide*, PI-MBUS-300 Rev. J, June 1996. All registers are implemented as 4X or holding registers. Reading of registers is implemented via function code 03H (Read Holding Registers). Writing to registers is implemented via function code 10H (Preset Multiple Registers). The instrument provides Enron Modbus® compliant downloads for hourly, daily and event records. For details on Enron Modbus®, refer to *Specifications and Requirements for an Electronic Flow Measurement Remote Terminal Unit for Enron Corp.*, Dec. 5, 1994.

Supported Commands

The Modbus® functions supported by the MC-III are as follows:

Function Code (Hex)	Description
03	Read Holding Registers
05	Preset Boolean (for Enron event record acknowledgement)
10	Preset Multiple Registers

For the read holding and preset multiple registers, the instrument supports the full 250 bytes of data in a message. This corresponds to 125 registers in 16-bit holding register size and 62 registers in 32-bit holding register size.

Data Types

Various data types are implemented in the MC-III. The following table lists the formats and the numbers of bytes and registers associated with each type.

Data Type	Byte Count	Register Count
Floating Point (FP)	4	2
Floating Point (FP32)	4	1
Unsigned Word (U16)	2	1
Packed ASCII (PA)	2	1

The Floating Point (FP) type follows the IEEE-754 format and consists of 32 bits contained in two registers. It is utilized for parameters and values that are not integers. For example, Instantaneous Flow Rate is a parameter that is a floating-point data type. It can be interpreted by reading two registers, starting with register 17014.

The Floating Point-32 bit (FP32) data type follows the IEEE-754 format and consists of 32 bits contained in a single register.

The standard word ordering for multiple register data types, such as floating-point numbers or long integers, is for the most significant word to appear first in the message. For master devices requiring the least significant word to appear last, a subset of registers is provided on *page D-11*.

The Unsigned Word (U16) type is used for 16-bit integers and fits into one register.

The Packed ASCII (PA) type contains two bytes that are two unsigned characters. Generally, multiple Packed ASCII types are arranged consecutively for implementing strings. For example, the device's well name is a string of 10 unsigned characters that is implemented as 5 Packed ASCII registers. Here is an example of a well name that contains the string, "Test Well 413."

Register	Hexadecimal #	ASCII Characters
210	54 65	Te
211	73 74	St
212	20 57	<SPACE>W
213	65 6C	el
214	6C 20	l<SPACE>
215	34 31	41
216	33 FF	3<UNUSED>

Unused characters at the end of each string will report 0xFF hexadecimal.

Registers

Each register has an Access type: read-only or read-write, as described below.

Access Type	Description
Read Only (RO)	Register can only be read.
Read/Write (R/W)	Register can be read and written.

The registers are grouped into Modbus® map blocks based on function. The MC-III contains the following map functions.

Function	Starting Register
System Configuration	1000
Real Time	1200
Input Configuration	2000
Output Configuration	4000
Holding Register (16-bit)	8000 and 17001
Holding Register (32-bit)	7000
Control Registers	70
Wellsite Parameters	200

Note All registers cited in this document refer to the address of the register that appears in the actual Modbus® message. For example, register 17001 has an address of 0x4268 Hexadecimal in the message.

Note Two sets of 16-bit holding registers are provided (starting at 17001 and 8000). The "8000" set should be used with master devices that require the holding registers to be in the range of 40000 to 49999.

System Configuration

Register (Decimal)	Register (Hex)	Description	Data Type	Access	Default
1000	03E8	Product Code	U16	RO	64
1001	03E9	Register Table Version Number	U16	RO	1
1002	03E	Firmware Version Number (Version = register value divided by 100) (Example: 100 = Version 1.00)	U16	RO	
1003	03EB	Manufacture Date (MMYY)	U16	RO	
1004	03EC	Sales Date (MMYY)	U16	RO	
1005	03ED	Serial Number 1	U16	RO	
1006	03EE	Serial Number 2	U16	RO	
1007	03EF	Power Mode 0 = High Power 1 = Low Power	U16	R/W	1
1008	03F0	Internal System Sample Rate Number of seconds to measure temperature and battery voltage	U16	R/W	3600
1009	03F1	Slave Address [1-65535, not including 252-255 or 64764]	U16	R/W	1
1010	03F2	Baud Rate *Low Power* / *High Power* 0 - 300 / 5 - 9600 1 - 600 / 6 - 19200 2 - 1200 / 7 - 38400 3 - 2400 / 8 - 57600 4 - 4800 / 10 - 115200 5 - 9600	U16	R/W	5
1011	03F3	Bus Delay – mS of delay before transmitting data (Delay = register value multiplied by 10 mS)	U16	R/W	1 (10 ms)
1012	03F4	Bus Timeout – mS of delay before resetting Modbus® (Timeout = register value multiplied by 10 mS)	U16	R/W	5 (50 mS)
1013	03F5	Contract Hour [0-23]	U16	R/W	8
1014	03F6	Lock Code [0001-9999]	U16	R/W	0
1015	03F7	Lock Code Enable 0 - Disabled 1 - Enabled	U16	R/W	0

System Configuration

Register (Decimal)	Register (Hex)	Description	Data Type	Access	Default
1016	03F8	LCD Contrast [0-31]	U16	R/W	6

Product Code (register 1000)

The Product Code is a read-only parameter used for identification. This parameter is set at the factory and it will always read 0x40 hexadecimal (64 decimal).

Firmware/Register Table Version Numbers (registers 1001, 1002)

The Firmware Version and Register Table Version numbers are unsigned 16-bit integers. These parameters are set at the factory and are read-only. To determine the firmware version number, read the appropriate register and divide the value read by 100. The general format for firmware version numbers is A.BC. For example, the firmware register number is read as 0xA7 hexadecimal. This represents 167 and a firmware version of 1.67.

Manufacture Date/Sales Date (registers 1003, 1004)

These parameters are set at the factory and are read-only. These registers are formatted as MMYY. For example, a value of 0905 represents the date September 2005.

Slave Address (register 1009)

The Modbus® slave address is an unsigned word (U16) data type that has a range of values from 1 to 65535, not including 252 through 255 or 64764. The slave address is configured from a laptop or via the keypad and is stored in nonvolatile memory.

Important: All MC-III devices will respond to addresses 252 through 255 and 64764, and the response will always be at a baud rate of 9600 baud. For this reason, addresses 252 through 255 and 64764 are reserved and should never be used.

When the slave address is written, the response message will be at the current address. After the response message is transmitted, the MC-III will change to the new slave address.

Baud Rate (register 1010)

The baud rate is an unsigned word (U16) data type that sets the data rate on the serial port. When the baud rate is written, the response message will be at the current baud rate. After the response message is transmitted, the MC-III will change to the new baud rate.

Real Time

Register (Decimal)	Register (Hex)	Description	Data Type	Access
1200	04B0	Year (Real Year = register value plus 2000)	U16	R/W
1201	04B1	Month [1-12]	U16	R/W
1202	04B2	Day [1-31]	U16	R/W
1203	04B3	Hour [0-23]	U16	R/W
1204	04B4	Minute [0-59]	U16	R/W
1205	04B5	Second [0-59]	U16	R/W

This block of registers is used to set the instrument's internal clock. To set the time, it is recommended that all registers be written in one message.

The time and date can also be read in the holding register groups as floating-point data.

Input Configuration

Register (Decimal)	Register (Hex)	Description	Data Type	Access	Default
2000	07D0	Volume Units *Units* 0 = No Units 1 = Gallons 2 = Barrels 3 = Cubic Meters 4 = Cubic Feet 5 = Liters *Units × 1000* 16 = No Units 17 = Gallons 18 = Barrels 19 = Cubic Meters 20 = Cubic Feet 21 = Liters *Standard Units* 32 = No Units 33 = Gallons 34 = Barrels 35 = Cubic Meters 36 = Cubic Feet 37 = Liters *Std. Units × 1000* 48 = No Units 49 = Gallons 50 = Barrels 51 = Cubic Meters 52 = Cubic Feet 53 = Liters	U16	R/W	2
2001	07D1	Volume Decimal Point Location 1 = Tenths 2 = Hundredths 3 = Thousandths 4 = Ten Thousandths	U16	R/W	1

Input Configuration

Register (Decimal)	Register (Hex)	Description	Data Type	Access	Default
2002	07D2	Rate Volume Units *Units* 0 = No Units 1 = Gallons 2 = Barrels 3 = Cubic Meters 4 = Cubic Feet 5 = Liters *Units × 1000* 16 = No Units 17 = Gallons 18 = Barrels 19 = Cubic Meters 20 = Cubic Feet 21 = Liters *Standard Units* 32 = No Units 33 = Gallons 34 = Barrels 35 = Cubic Meters 36 = Cubic Feet 37 = Liters *Std. Units × 1000* 48 = No Units 49 = Gallons 50 = Barrels 51 = Cubic Meters 52 = Cubic Feet 53 = Liters	U16	R/W	2
2003	07D3	Rate Time Base 0 = Second 1 = Minute 2 = Hour 3 = Day	U16	R/W	3
2004	07D4	Rate Decimal Point Location 0 = No digits to the right of the decimal point 1 = Tenths 2 = Hundredths 3 = Thousandths	U16	R/W	2
2005	07D5	Calculation Period (sec)	U16	R/W	4
2006	07D6	Turbine Meter Input Configuration 0 = Pulse Input 1 = TFM - LOW 2 = TFM - MED 3 = TFM - HIGH	U16	R/W	1
2007	07D7	Low Frequency Cut-Off Threshold (Hz)	U16		2
2008	07D8	Factor Type 1 = 1-Point K-Factor 2 = 2-Point K-Factor … 12 = 12-Point K-Factor	U16	R/W	1

Input Configuration

Register (Decimal)	Register (Hex)	Description	Data Type	Access	Default
2009	07D9	Factor Units 0 = No Units 1 = Gallons 2 = Liters 3 = Barrels 4 = Cubic Feet 5 = Cubic Meters	U16	R/W	1
2010	07DA	Factor Decimal Point Location 0 = No digits to the right of the decimal point 1 = Tenths 2 = Hundredths 3 = Thousandths 4 = Ten Thousandths	U16	R/W	2
2011	07DB	Calibration Frequency [1] (Hz)*	FP	R/W	1.00
2013	07DD	Calibration Frequency [2] (Hz)*	FP	R/W	1.00
2015	07DF	Calibration Frequency [3] (Hz)*	FP	R/W	1.00
2017	07E1	Calibration Frequency [4] (Hz)*	FP	R/W	1.00
2019	07E3	Calibration Frequency [5] (Hz)*	FP	R/W	1.00
2021	07E5	Calibration Frequency [6] (Hz)*	FP	R/W	1.00
2023	07E7	Calibration Frequency [7] (Hz)*	FP	R/W	1.00
2025	07E9	Calibration Frequency [8] (Hz)*	FP	R/W	1.00
2027	07EB	Calibration Frequency [9] (Hz)*	FP	R/W	1.00
2029	07ED	Calibration Frequency [10] (Hz)*	FP	R/W	1.00
2031	07EF	Calibration Frequency [11] (Hz)*	FP	R/W	1.00
2033	07F1	Calibration Frequency [12] (Hz)*	FP	R/W	1.00
2035	07F3	Calibration Factor [1]* (pulses per configured factor unit)	FP	R/W	900.00
2037	07F5	Calibration Factor [2]* (pulses per configured factor unit)	FP	R/W	1.00
2039	07F7	Calibration Factor [3]* (pulses per configured factor unit)	FP	R/W	1.00
2041	07F9	Calibration Factor [4]* (pulses per configured factor unit)	FP	R/W	1.00
2043	07FB	Calibration Factor [5]* (pulses per configured factor unit)	FP	R/W	1.00
2045	07FD	Calibration Factor [6]* (pulses per configured factor unit)	FP	R/W	1.00
2047	07FF	Calibration Factor [7]* (pulses per configured factor unit)	FP	R/W	1.00
2049	0801	Calibration Factor [8]* (pulses per configured factor unit)	FP	R/W	1.00

Input Configuration

Register (Decimal)	Register (Hex)	Description	Data Type	Access	Default
2051	0803	Calibration Factor [9]* (pulses per configured factor unit)	FP	R/W	1.00
2053	0805	Calibration Factor [10]* (pulses per configured factor unit)	FP	R/W	1.00
2055	0807	Calibration Factor [11]* (pulses per configured factor unit)	FP	R/W	1.00
2057	0809	Calibration Factor [12]* (pulses per configured factor unit)	FP	R/W	1.00
2059	080B	Standard Measurement Correction Factor (to be configured by software only)	FP	RO	1.00
2061	080D	Low Flow Rate Cut-Off Threshold (in terms of configured flow rate units)	FP	R/W	1.00

*Calibration frequencies and calibration factors are associated in pairs—i.e., Calibration Frequency [1] and Calibration Factor [1]— and must be sorted in ascending order, based on calibration frequency values, prior to writing the values to the instrument. Therefore, Calibration Frequency [1] should be the smallest of all calibration frequencies.

Output Configuration

Register (Decimal)	Register (Hex)	Description	Data Type	Access	Default
4000	0FA0	Pulse Output Source 0 = Test Mode/Disabled 1 = Enabled	U16	R/W	0
4001	0FA1	Pulse Output Duration (time is register value multiplied by 10 ms)	U16	R/W	10 (100 mS)
4002	0FA2	Pulse Output Decimal Point Location	U16	R/W	2
4003	0FA3	Pulse Output Scale Factor (in terms of configured volume units)	FP	R/W	1.00
4005	0FA5	Analog Output Source 0 = Test Mode/Disabled 1 = Enabled	U16	R/W	0
4006	0FA6	Analog Output Decimal Point Location	U16	R/W	2
4007	0FA7	Analog Output Low Value (in terms of configured flow rate units)	FP	R/W	0.00
4009	0FA9	Analog Output High Value (in terms of configured flow rate units)	FP	R/W	1700.00

Important: Two sets of 16-bit holding registers are provided (starting at 17001 and 8000). The "8000" set displayed in parentheses in the Holding Registers table on *page D-9* should be used with master devices that require the holding registers to be in the range of 40000 to 49999.

Holding Registers (16-bit Mode)

Register (Decimal)	Register (Hex)	Description	Data Type	Access
17001 (8000)	4269 (1F40)	Hourly Pointer [1 to 768]	FP	RO
17003 (8002)	426B (1F42)	Daily Pointer [1 to 384]	FP	RO
17005 (8004)	426D (1F44)	Event Counter [1 to 345]	FP	RO
17007 (8006)	426F (1F46)	Real Date (MM/DD/YY)	FP	RO
17009 (8008)	4271 (1F48)	Real Time (HH:MM:SS)	FP	RO
17011 (8010)	4273 (1F4A)	Grand Total (in terms of configured volume units)	FP	RO
17013 (8012)	4275 (1F4C)	Instantaneous Flow Rate (in terms of configured flow rate units)	FP	RO
17015 (8014)	4277 (1F4E)	Daily Total (in terms of configured volume units)	FP	RO
17017 (8016)	4279 (1F50)	Daily Run Time (seconds)	FP	RO
17019 (8018)	427B (1F52)	Hourly Total (in terms of configured volume units)	FP	RO
17021 (8020)	427D (1F54)	Hourly Run Time (seconds)	FP	RO
17023 (8022)	427F (1F56)	Polling Total (in terms of configured volume units)	FP	RO
17025 (8024)	4281 (1F58)	Polling Run Time (seconds)	FP	RO
17027 (8026)	4283 (1F5A)	Previous Day Total (in terms of configured volume units)	FP	RO
17029 (8028)	4285 (1F5C)	Previous Day Run Time (seconds)	FP	RO
17031 (8030)	4287 (1F5E)	Previous Hour Total (in terms of configured volume units)	FP	RO
17033 (8032)	4289 (1F60)	Previous Hour Run Time (seconds)	FP	RO
17035 (8034)	428B (1F62)	Previous Polling Total (in terms of configured volume units)	FP	RO
17037 (8036)	428D (1F64)	Previous Polling Run Time (seconds)	FP	RO
17039 (8038)	428F (1F66)	Polling Index [0-65535]	FP	RO
17041 (8040)	4291 (1F68)	Internal Temperature (°C)	FP	RO

Holding Registers (16-bit Mode)

Register (Decimal)	Register (Hex)	Description	Data Type	Access
17043 (8042)	4293 (1F6A)	Supply Voltage (VDC)	FP	RO
17045 (8044)	4295 (1F6C)	Battery Voltage (VDC)	FP	RO
17047 (8046)	4297 (1F6E)	Grand Total (base unit)	FP	RO
17049 (8048)	4299 (1F70)	Instantaneous Flow Rate (base unit)	FP	RO
17051 (8050)	429B (1F72)	Daily Total (base unit)	FP	RO
17053 (8052)	429D (1F74)	Daily Run Time (seconds)	FP	RO
17055 (8054)	429F (1F76)	Hourly Total (base unit)	FP	RO
17057 (8056)	42A1 (1F78)	Hourly Run Time (seconds)	FP	RO
17059 (8058)	42A3 (1F7A)	Polling Total (base unit)	FP	RO
17061 (8060)	42A5 (1F7C)	Polling Run Time (seconds)	FP	RO
17063 (8062)	42A7 (1F7E)	Previous Day (base unit)	FP	RO
17065 (8064)	42A9 (1F80)	Previous Day Run Time (seconds)	FP	RO
17067 (8066)	42AB (1F82)	Previous Hour (base unit)	FP	RO
17069 (8068)	42AD (1F84)	Previous Hour Run Time (seconds)	FP	RO
17071 (8070)	42AF (1F86)	Previous Polling Total (base unit)	FP	RO
17073 (8072)	42B1 (1F88)	Previous Polling Run Time (seconds)	FP	RO
17075 (8074)	42B3 (1F8A)	Polling Index [0-65535]	FP	RO
17077 (8076)	42B5 (1F8C)	Pulse Output Pulses	FP	R/W
17079 (8078)	42B7 (1F8E)	Analog Output Current	FP	R/W
17081 (8080)	42B9 (1F90)	Calculated K-Factor (in terms of configured factor unit)	FP	RO

Note: The registers below should be used with master devices that require the floating point numbers to be presented with the least significant word first. Their counterparts with floating point numbers in reverse word order—registers 17011, 17013, 17027 and 17015—are listed in the previous table.

Holding Registers (16-bit Mode)—Least Significant Word First

Register (Decimal)	Register (Hex)	Description	Data Type	Access
550	226	Grand Total (in terms of configured volume units)	FP	RO
552	228	Instantaneous Flow Rate (in terms of configured flow rate units)	FP	RO
554	22A	Daily Total (in terms of configured volume units)	FP	RO
556	22C	Previous Day Total (in terms of configured volume units)	FP	RO

Base Units/Configured Units

The holding register area provides two blocks of registers. The first block is based on the *configured* units of measurement. The configured volume units will follow the settings in the Volume Unit register (2000). The configured rate units will follow the settings in the Rate Volume units (2002) and the Time-Base register (2003).

For example, if the settings for the volume unit is 2 (BBL), all of the total parameters such as Grand Total (17011), Daily Total (17015), etc. will be in terms of barrels. The values in these registers will change if the user changes the units of measurement that appear on the LCD.

The second block is in terms of *base* units. These register values are independent of the configured volume units in the Volume Unit, Rate Volume Unit, and Time-Base registers. For base units, the time base is always measured in seconds, and the volume and rate volume units are measured in gallons. If the standard correction factor has been enabled, the volume unit is standard gallons. The standard gallon is calculated as the gallon measurement times the Standard Measurement Correction factor (2059). If the x1000 unit is enabled, the volume unit is gallons times 1000.

Conversion Factors

For base units, the volume unit and rate volume unit is measured in gallons.To convert gallons to another unit of measure, use the conversion factors listed in the table below. For example, to convert gallons to barrels, multiply gallons times 0.02380952381.

To Convert From Gallons To...	Multiply By...
No units	1.00000000000
Barrels	0.02380952381
Cubic meters	0.00378541178
Cubic feet	0.13368055556
Liters	3.78541178400

Polling Registers

The MC-III EXP device stores the volume accumulated since the last polling sequence in a set of polling registers (17023). In addition, the instrument monitors the number of seconds of flow time in each polling interval (17025). There is also an index to the number of polls requested (17039).

The polling sequence is started by writing to the Control Register. Writing the Control Register 1 (70) with a value of 20000 decimal transfers the polling total (17023) and polling run time (17025), to the previous polling total (17035) and previous polling run time (17037) registers, increments the polling index (17039) register and resets the polling total and polling run time registers.

Pointer/Daily/Event Pointer (registers 17001 through 17006)

These registers provide an index of the last record that was stored in the log data. These values start at 1 and increment with each newly created log. When the maximum number of records is reached, the pointer resets at 1 and starts incrementing again.

Real Date (registers 17007, 17008)

This register is a floating-point representation of the date, formatted as MMDDYY. For example, a value of 91005 represents a date of September 10, 2005.

Real Time (registers 17009, 17010)

This register is a floating-point representation of time, formatted as HH:MM:SS. For example, a value of 180205 represents a time of 6:02:05 PM.

Totals

The instrument provides Grand Total (17011), Daily Total (17015), Hourly Total (17019) and a Polling Total (17023). It also provides Previous Day Total (17027), Previous Hour Total (17031), and Previous Polling Total (17035). These totals are available in terms of configured units and base units. Refer to *Base Units/ Configured Units, page D-11*, for details.

Pulse Output Pulses (register 17077)

When the pulse output is enabled (see Pulse Output Source, register 4000), this register indicates the current number of output pulses to be sent to the output relay, based on the configured duration. In a typical application, this register will generally indicate a small number, then quickly count down to zero. In a situation where pulses are being cached, the pulses register will indicate a large value. When the pulse output is disabled, a user can use this register to write a desired number of pulses to be output, for use in testing end devices. Users can also perform this output test from the software Pulse Output configuration screen. For details, see *Pulse Output Testing, page 68*.

Analog Output Current (register 17079)

When the analog output is enabled (see Analog Output Source, register 4005), this register indicates the calculated output current based on the low and high values and the instantaneous flow rate. When the analog output is disabled, a user can use this register to write a desired output current for use in testing end devices. Users can also perform this output test from the software 4-20 mA Output configuration screen. For details, see *4-20 mA Output Testing, page 65*.

Calculated K-Factor (register 17081)

This register represents the K-factor that was used for the most recent calculation interval. This number is calculated based on the factor type (register 2008), the instantaneous frequency from the flowmeter, calibration frequencies (registers 2011 through 2033), and calibration factors (registers 2035 through 2057).

The unit of measurement for this register is pulses per configured factor unit. Once the K-factor is calculated based on frequency and K-factor points, this value is multiplied by 1000 if the user chooses to read the volume in units x 1000, and it is divided by the Standard Measurement Correction Factor (register 2059).

Holding Registers (32-bit Mode)

Register (Decimal)	Register (Hex)	Description	Data Type	Access
7000	1B58	Hourly Pointer [1 to 768]	**FP32**	RO
7001	1B59	Daily Pointer [1 to 384]	FP32	RO
7002	1B5A	Event Counter [1 to 345]	FP32	RO
7003	1B5B	Real Date (MM/DD/YY)	FP32	RO
7004	1B5C	Real Time (HH:MM:SS)	FP32	RO
7005	1B5D	Grand Total (in terms of configured volume units)	FP32	RO
7006	1B5E	Instantaneous Flow Rate (in terms of configured flow rate units)	FP32	RO
7007	1B5F	Daily Total (in terms of configured volume units)	FP32	RO
7008	1B60	Daily Run Time (seconds)	FP32	RO
7009	1B61	Hourly Total (in terms of configured volume units)	FP32	RO
7010	1B62	Hourly Run Time (seconds)	FP32	RO
7011	1B63	Polling Total (in terms of configured volume units)	FP32	RO
7012	1B64	Polling Run Time (seconds)	FP32	RO
7013	1B65	Previous Day Total (in terms of configured volume units)	FP32	RO
7014	1B66	Previous Day Run Time (seconds)	FP32	RO
7015	1B67	Previous Hour Total (in terms of configured volume units)	FP32	RO
7016	1B68	Previous Hour Run Time (seconds)	FP32	RO
7017	1B69	Previous Polling Total (in terms of configured volume units)	FP32	RO
7018	1B6A	Previous Polling Run Time (seconds)	FP32	RO

Holding Registers (32-bit Mode)

Register (Decimal)	Register (Hex)	Description	Data Type	Access
7019	1B6B	Polling Index [0-65535]	FP32	RO
7020	1B6C	Internal Temp (°C)	FP32	RO
7021	1B6D	Supply Voltage (VDC)	FP32	RO
7022	1B6E	Battery Voltage (VDC)	FP32	RO
7023	1B6F	Grand Total (base unit)	FP32	RO
7024	1B70	Instantaneous Flow Rate (base unit)	FP32	RO
7025	1B71	Daily Total (base unit)	FP32	RO
7026	1B72	Daily Run Time (seconds)	FP32	RO
7027	1B73	Hourly Total (base unit)	FP32	RO
7028	1B74	Hourly Run Time (seconds)	FP32	RO
7029	1B75	Polling Total (base unit)	FP32	RO
7030	1B76	Polling Run Time (seconds)	FP32	RO
7031	1B77	Previous Day (base unit)	FP32	RO
7032	1B78	Previous Day Run Time (seconds)	FP32	RO
7033	1B79	Previous Hour (base unit)	FP32	RO
7034	1B7A	Previous Hour Run Time (seconds)	FP32	RO
7035	1B7B	Previous Polling Total (base unit)	FP32	RO
7036	1B7C	Previous Polling Run Time (seconds)	FP32	RO
7037	1B7D	Polling Index [0-65535]	FP32	RO
7038	1B7E	Pulse Output Pulses	FP32	R/W
7039	1B7F	Analog Output Current	FP32	R/W
7040	1B80	Calculated K-Factor (in terms of configured factor unit)	FP32	RO

Control Register

Register (Decimal)	Register (Hex)	Description	Data Type	Access
70	0046	Control Register #1	U16	R/W

The Control register allows specific functions to be implemented via the communication port. The following table shows the value to be written to the control register to implement the desired function.

Code	Function
20000	Transfers the polling total and polling run time to the previous polling total and previous polling run time registers, increments the polling index register, and resets the polling total and polling run time registers.
30000	Resets grand total
40000	Loads factory defaults
40040	Creates processor reset

Wellsite Parameters

Register (Decimal)	Register (Hex)	Description	Data Type	Access
200	00C8	Company Name [20 characters]	PA	RO
210	00D2	Well Name [20 characters]	PA	RO
220	00DC	Site Location [20 characters]	PA	RO
300	012C	Site ID [20 characters]	PA	RO
310	0136	Tag Name [10 characters]	PA	RO
315	013B	Legal Description [34 characters]	PA	RO
400	0190	Sensor Model Number [20 characters]	PA	RO
410	019A	Sensor Serial Number [20 characters]	PA	RO
420	01A4	Measurement Type [20 characters]	PA	RO
500	01F4	User Note [64 characters]	PA	RO

These registers provide access to the ASCII characters that are used in the Wellsite Information screen of the software. These registers are read-only; if these parameters need to be changed, the user must use the interface software program.

Log Data

The MC-III provides Enron Modbus® compliant downloads. For detailed instructions on downloading hourly, daily and event data, refer to *Specifications and Requirements for an Electronic Flow Measurement Remote Terminal Unit for Enron Corp*. If an Enron host is not available or is too cumbersome to implement, the Enron records are individually addressed in another Modbus® map. Contact Cameron technical support for details.

The following registers are used for hourly, daily and event log registers. Hourly and daily records comprise five values (registers). See the *Enron Hourly/Daily Record Format, page D-16*. Note that event records are downloaded one at a time.

Enron Registers

Register (Decimal)	Register (Hex)	Description	Data Type	Access
32	0020	Enron Modbus® Event Log Register	Refer to Enron Event Record Format	RO
700	02BC	Enron Modbus® Hourly Log	Refer to Enron Hourly/Daily Record Format	RO
701	02BD	Enron Modbus® Daily Log	Refer to Enron Hourly/Daily Record Format	RO
7000	1B58	Hourly Pointer [1 to 768]	FP32	RO
7001	1B59	Daily Pointer [1 to 384]	FP32	RO
7002	1B5A	Event Counter [1 to 345]	FP32	RO

Enron Hourly/Daily Record Format

Parameter	Data Type
Date (MMDDYY)	FP32
Time (HH:MM:SS)	FP32
Total (base units)	FP32
Flow Time (number of seconds of flow)	FP32
Supply Voltage (VDC)	FP32

Enron Event Record Format

Parameter	Data Type
Status	U16
Address	U16
Time (HH:MM:SS)	FP32
Date (MMDDYY)	FP32
As-Found	FP32
As-Left	FP32

The Event Log status is a 16-bit value used to indicate the reset source in the event log. The following table indicates the reset status.

Reset Status

Status Code	Value
Normal	0
Power-On Reset	3
Watch-Dog	8
Software Reset	16
Flash Memory Error	32

Log Capacity

Log Type	Capacity
Hourly Logs	768
Daily Logs	384
Event Logs	345

WARRANTY - LIMITATION OF LIABILITY: Seller warrants only title to the products, software, supplies and materials and that, except as to software, the same are free from defects in workmanship and materials for a period of one (1) year from the date of delivery. Seller does not warranty that software is free from error or that software will run in an uninterrupted fashion. Seller provides all software “as is”. THERE ARE NO WARRANTIES, EXPRESS OR IMPLIED, OF MERCHANTABILITY, FITNESS OR OTHERWISE WHICH EXTEND BEYOND THOSE STATED IN THE IMMEDIATELY PRECEDING SENTENCE. Seller’s liability and Buyer’s exclusive remedy in any case of action (whether in contract, tort, breach of warranty or otherwise) arising out of the sale or use of any products, software, supplies, or materials is expressly limited to the replacement of such products, software, supplies, or materials on their return to Seller or, at Seller’s option, to the allowance to the customer of credit for the cost of such items. In no event shall Seller be liable for special, incidental, indirect, punitive or consequential damages. Seller does not warrant in any way products, software, supplies and materials not manufactured by Seller, and such will be sold only with the warranties that are given by the manufacturer thereof. Seller will pass only through to its purchaser of such items the warranty granted to it by the manufacturer.

MEASUREMENT SYSTEMS

HOUSTON HEAD OFFICE | 281.582.9500
NORTH AMERICA | 1.800.654.3760 ms-us@c-a-m.com
ASIA PACIFIC | +603.5569.0501 ms-kl@c-a-m.com
EUROPE, MIDDLE EAST & AFRICA | +44.1243.826741 ms-uk@c-a-m.com

USA • CANADA • UK • SCOTLAND • CHINA • UAE • ALGERIA • MALAYSIA • INDIA • RUSSIA • www.c-a-m.com/flo



NUFLO MC-III EXP Flow Analyzer

Cameron's NUFLO™ MC-III™ EXP Flow Analyzer provides state-of-the-art liquid and gas measurement with data logging and Modbus® communications in an easy-to-use explosion-proof totalizer.

The MC-III EXP stores more flow logs and downloads them faster than any other flow analyzer on the market.

This powerhouse records up to 384 daily flow logs, 768 hourly logs, 345 event logs and downloads them to your computer via Modbus in less than a minute.

The MC-III EXP is designed to perform reliably in hazardous areas and in the harshest environmental conditions across the globe.

The MC-III EXP connects to a gas or liquid turbine meter or a pre-amplifier. Users can select a 4 to 20 mA output, a pulse output or an amplified flow meter frequency output that allows remote equipment to calculate flow rates and volume.

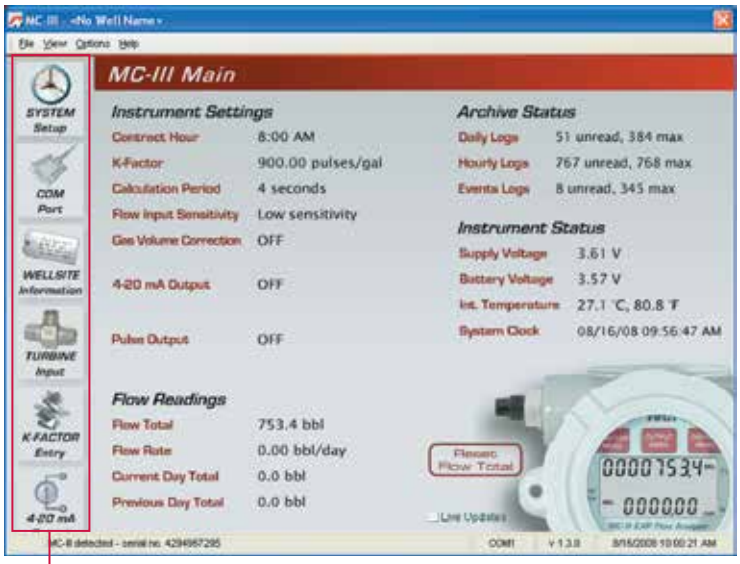

Users can access every configuration parameter from one screen.



Benefits

The MC-III EXP offers:

- RS-485 Modbus communications
- Extensive log archival capacity
- High-speed data downloads
- Interactive software for quick and easy calibration and data access
- Simultaneous indication of rate and total
- Easy-to-read LCD displays
- Loop-powered analog output
- 12-point linearization
- Nonvolatile memory
- Password-protected security
- Optional hardware for daily log viewing and external laptop connection
- Intrinsically safe RS-485 output (option)
- CSA, ATEX, IECEx and CE approvals

Calibration

Calibrating the MC-III EXP is as easy as entering the calibration factor of the flow meter and selecting the desired units of measurement. The instrument automatically calculates its own divisor.

The wide variety of unit options for total and rate gives users the freedom to customize the display, inputs and outputs for specific needs.

With the built-in wizard that guides users step by step through the configuration process, even first-time users will get dependable results in just minutes.

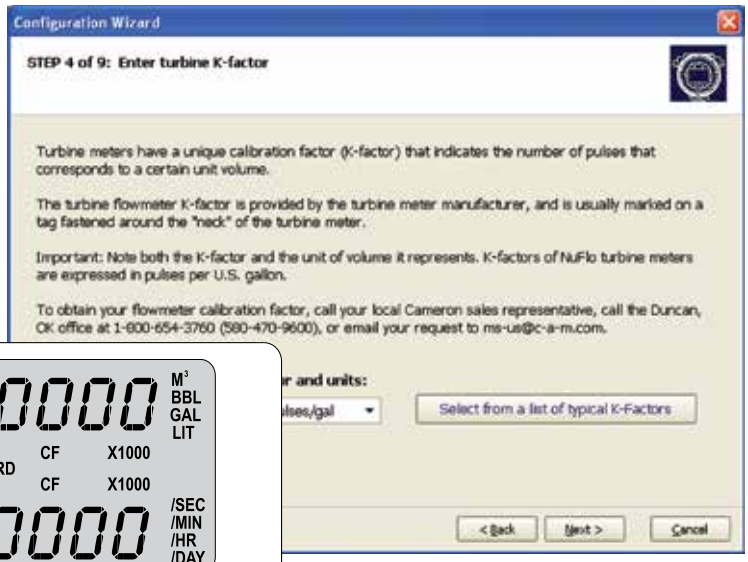

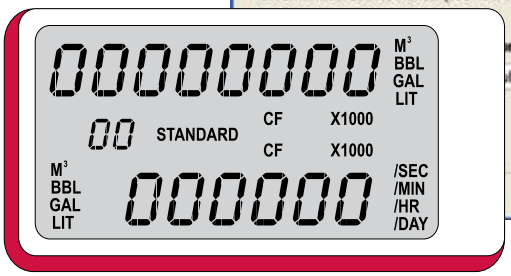

Keypad Configuration

The MC-III EXP can be configured with either the software interface or the six-button keypad on the front of the instrument. Built-in shortcuts to common functions (see diagram below) simplify configuration, reducing the user's time spent on site.

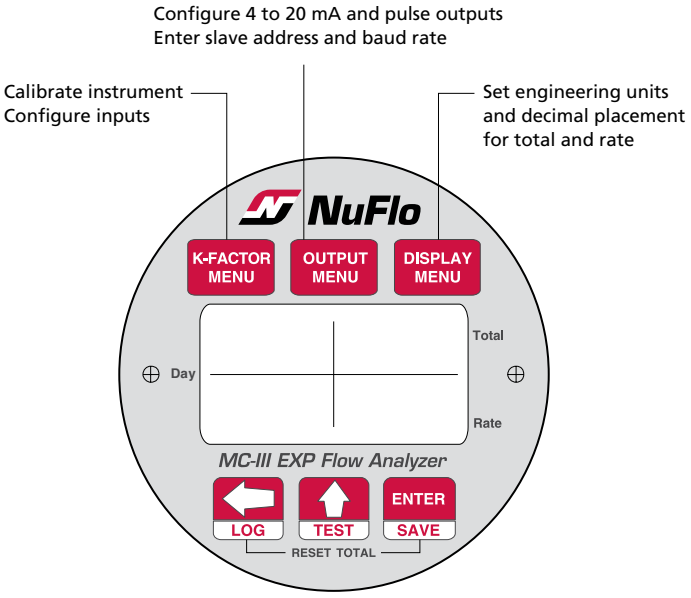

MC-III EXP and Turbine Meter Packages

The MC-III EXP can be packaged with a NUFLO or BARTON® 7000 Series gas or liquid turbine meter and a suitable CSA or ATEX approved adapter and shipped straight from the factory, ready for installation.



Display

- Eight-digit display of total
- Six-digit display of rate (11-segment characters for easy-to-read prompts)
- Character height – 0.3"
- Adjustable contrast and update period
- User-selectable units of measurement:
  - Total: bbl, gal, liters, cubic meters, cubic feet, standard cubic feet, user-defined units (and all units x 1000)
  - Rate: Any of the above total engineering units per day, hour, minute or second

Calibration

- Liquid flow meter: User enters calibration factor of meter and selects units of measurement
- Gas flow meter: User enters calibration factor of meter, pressure and temperature parameters, and FPV via user interface software

Power Supply Options

- 3.6 VDC lithium battery pack
  - Two-year life, typical (main or backup power supply)
- Alkaline battery pack option (main or backup power supply)
  - CSA approved devices only
  - not recommended for temperatures consistently below 20° F (-7° C)
- External power supply (6 to 30 VDC) with internal battery backup
- Loop-powered (4 to 20 mA output) with internal battery backup

Temperature Range

- Lithium battery: -40° F to 158° F (-40° C to 70° C)
- Alkaline battery pack (CSA only): 20° F to 140° F (-7° C to 60° C)
- LCD contrast is reduced below -4° F (-20° C)

Certification

- CSA approved for US and Canada
  - Class I, Div. 1, Groups B, C, D (explosion-proof)
  - Type 4 enclosure
  - T6 temperature class
- ATEX/IECEx approved
  - Category II, Group 2, Gas/Dust
  - Ex d IIC T6 Gb
  - Ex tD A21 IP66 T85°C
- CE-approved
- Complies with EMC Directive 2004/108/EC

Communications/Archive Retrieval

- RTU mode Modbus
- Enron Modbus
- 16-bit slave address supported
- Data printouts in tabular or chart formats
- Data export to spreadsheet (.xls and .csv formats)

Inputs

Turbine Meter Input

- Configurable sensitivity adjustment
- Frequency range: 0 to 3500 Hz

Remote Reset Input

- Optically isolated
- Supply range: 3.0 to 30 VDC

External Reset Switch (Option)

- Explosion-proof
- Daily log viewing capabilities

Pulse Input

- Optically isolated
- Supply range: 3.0 to 30 VDC
- Frequency range: 0 to 3500 Hz

Outputs

Analog Output

- 4 to 20 mA, loop-powered (two-wire)
- 16-bit resolution
- Accuracy: 0.1% of full scale at 77° F (25° C), 50 PPM/°C temperature drift
- Loop power: 8.0 to 30 VDC
- Zero and full-scale engineering values configurable from front panel
- Cannot be used simultaneously with amp and square output

RS-485 Communications

- Baud rates: 300, 600, 1200, 2400, 4800, 9600, 19,200, 38,400, 57,600 and up to 115.2 K
- Optional external communications port
  - RS-485 adapter (CSA and ATEX approved)
  - USB adapter (CSA approved)

Volumetric Pulse Output

- Solid-state relay
- Output rating: 60 mA max at 30 VDC
- Configurable pulse duration and scale factor

Amp and Square Output

- Open-drain transistor output of turbine meter input signal
- Output rating: 50 mA at 30 VDC
- Cannot be used simultaneously with analog output

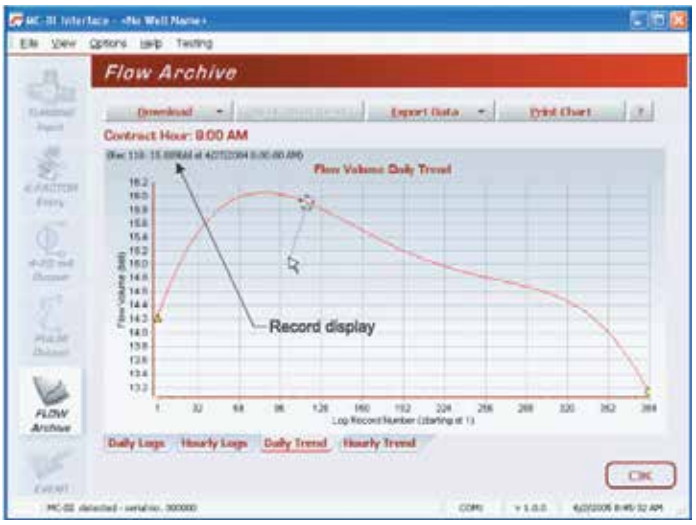

Interface Software

- Provided at no additional charge
- Complete configuration
- Real-time data
- Downloads and exports
- "Wizard" offers step-by-step calibration procedure
- Windows® XP, Windows Vista®, or Windows® 7 required

Flow Archive

- 384 daily logs
- 768 hourly logs
- 345 event logs
  - K-factor changes
  - Input setting changes

NORTH AND SOUTH AMERICA
14450 JFK Blvd.
Houston, TX 77032
USA
Tel 1 281 582 9500
ms-us@c-a-m.com

EUROPE, AFRICA, CASPIAN AND RUSSIA
3 Steyning Way
Southern Cross Trading Estate
Bognor Regis
West Sussex PO22 9TT
England, UK
Tel 44 1243 826741
ms-uk@c-a-m.com

ASIA PACIFIC
Suite 16.02 Menara
AmFirst
No. 1 Jalan 19/3
46300 Petaling Jaya
Selangor Darul Ehsan
Malaysia
Tel 603 7954 0145
ms-kl@c-a-m.com

MIDDLE EAST
Level 9, Al Jazira Club Tower A
PO Box 47280, Muroor Road
Abu Dhabi
United Arab Emirates
Tel 971 2 596 8400
ms-uk@c-a-m.com

ALGERIA • CANADA • CHINA • INDIA • MALAYSIA • RUSSIA • UAE • UK • USA

www.c-a-m.com/measurement

© 2013 Cameron | NUFLO and MC-III are trademarks of Cameron. BARTON is a registered trademark of Cameron.
Modbus is a registered trademark of the Modbus Organization, Inc. Windows is a registered trademark of Microsoft. | SWP 2M 09/13 AD01094M

Class I, Group A, B, C, D, Division I
Single Seal
Complies with ASME Standard B31.3

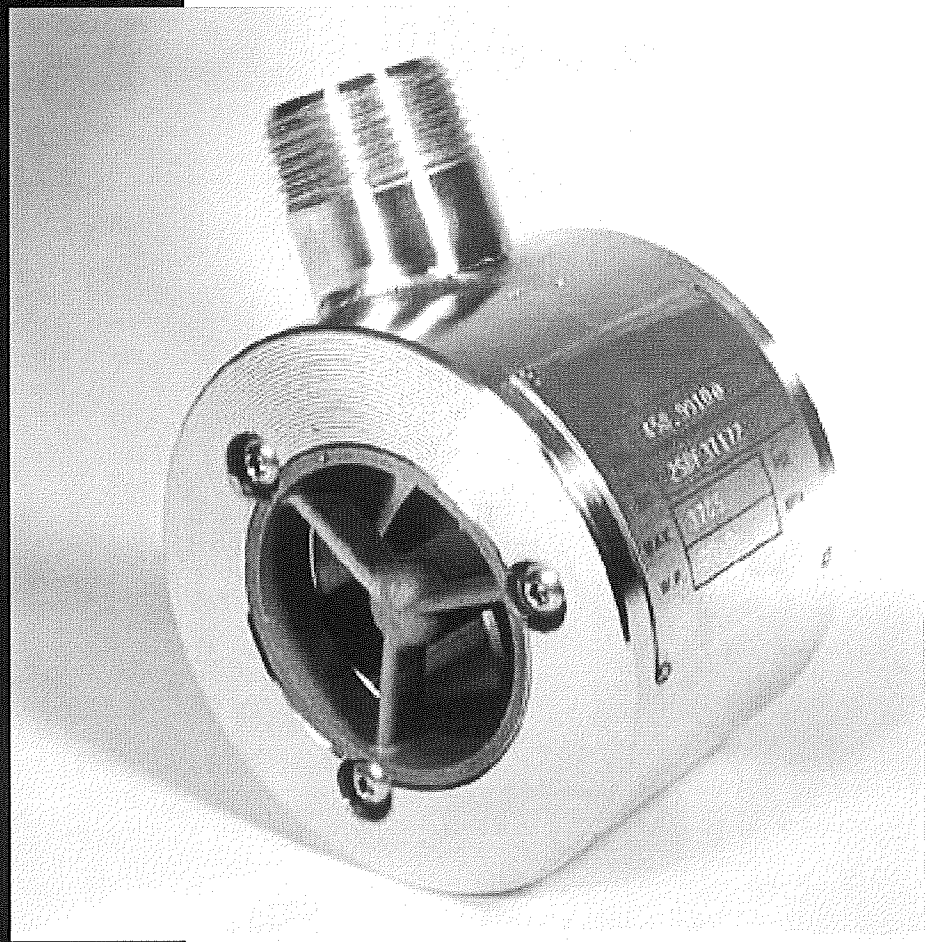

NUFLO™

EZ-IN® Series Turbine Flowmeter

Installation Manual

Part No. 9A-100062997, Rev. 03

CAMERON

Measurement Systems

EZ-IN® Series BF Turbine Flowmeter Manual

Part No. 9A-100062997, Rev. 03
July 2012
© 2012 Cameron International Corporation ("Cameron")
Printed in USA
All Rights Reserved

Table of Contents

Introduction 5
Installation 10
    Precautions 10
    Installation Procedure 11
Calibration 12
Maintenance and Repairs 14
    Removing the Meter from the Pipeline 14
    Disassembling the EZ-IN Hex-Body Meter 15
    Reassembling the EZ-IN Hex-Body Meter 16
    Disassembling the Round-Body EZ-IN Meter 19
    Reassembling the Round-Body EZ-IN Meter 20
    Returning the Meter to the Pipeline 23
Specifications and Parts Lists 24
    Temperature and Pressure Ratings 24
    Flow Ranges 25
    Internal Components Repair Kit for Hex-Body EZ-IN Meters 26

Internal Components Repair Kit for Round-Body EZ-IN Meters 27
Retainer Rings for Hex-Body EZ-IN Meters 28
Hardware Kits and Centering Rings (Raised Face Flanges) 29
Hardware Kits (Ring Joint Flanges) 30
Magnetic Pickups and Replacement Lock Nuts 30

Introduction

The EZ-IN® Series Between-Flange Turbine Flowmeter measures flowstream volume in flanged pipelines by transmitting electrical pulses to readout instruments.

The flowmeter's precision turbine has a rotational velocity proportional to the linear velocity of the fluid flowing through the meter. As the turbine rotates, the blades break magnetic lines of force set up by a magnetic pickup screwed into the meter body. This penetration of the magnetic field creates electrical pulses.

Internal components vary, depending on the size of the end connection. The hex-body flowmeter shown in Figure 1, page 6, is designed with a 1-in. end connection. The round-body flowmeter shown in Figure 2, page 7, is designed with a 2-in. or larger end connection.

For installation, ANSI raised face or ring joint flanges and gaskets are recommended as well as all-thread studs and nuts. Body centering rings and flow straighteners can also be used.

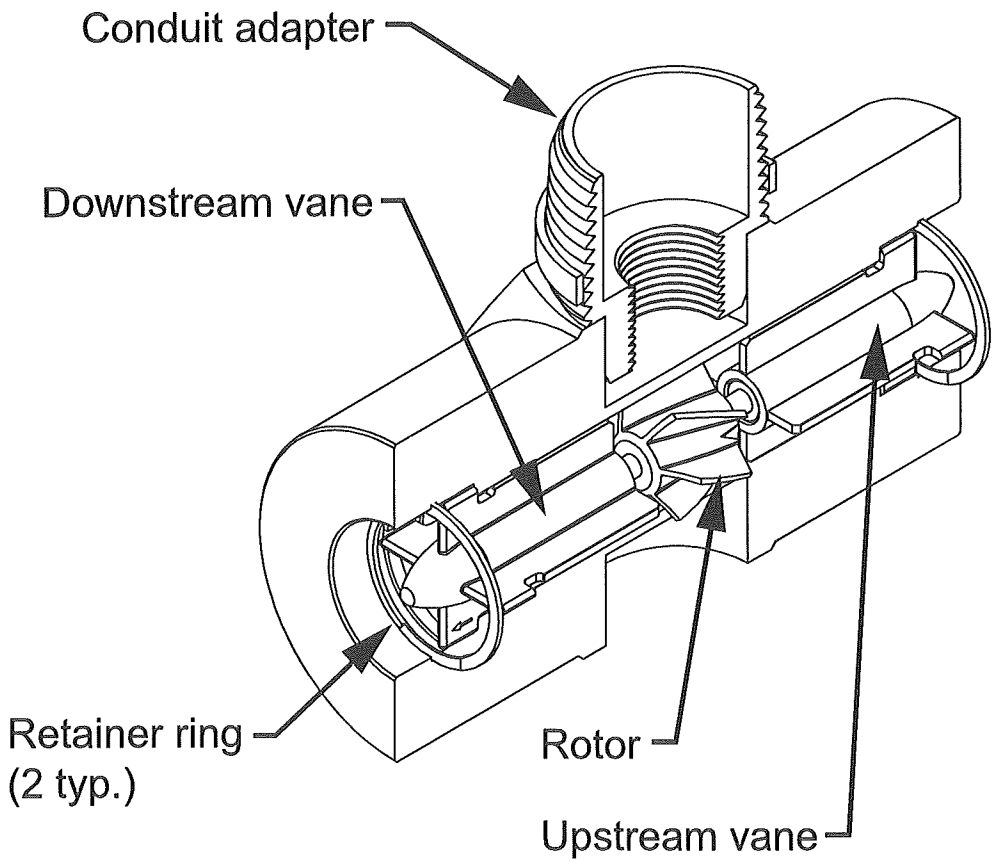

Figure 1—Internal components for hex-body flowmeters (1-in. end connection)

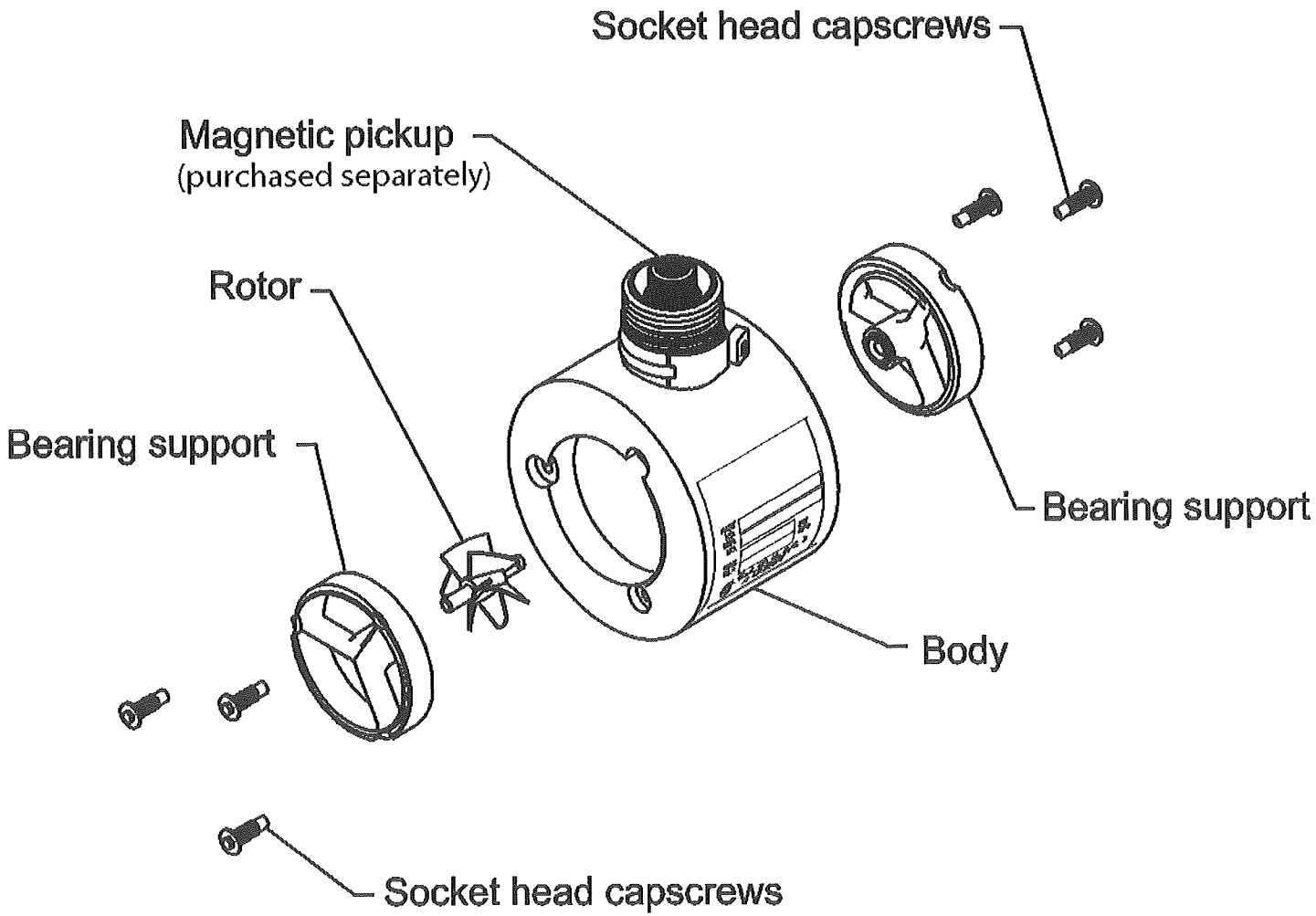

Figure 2—Internal components for round-body flowmeters (2-in. or larger end connection)

An installation handle (Figure 3) is available to allow easier installation and removal (Part No. 9A-100079570). An optional 3/4-in. thin-wall pickup lock-nut socket is also available (Part No. 9A-100013146).

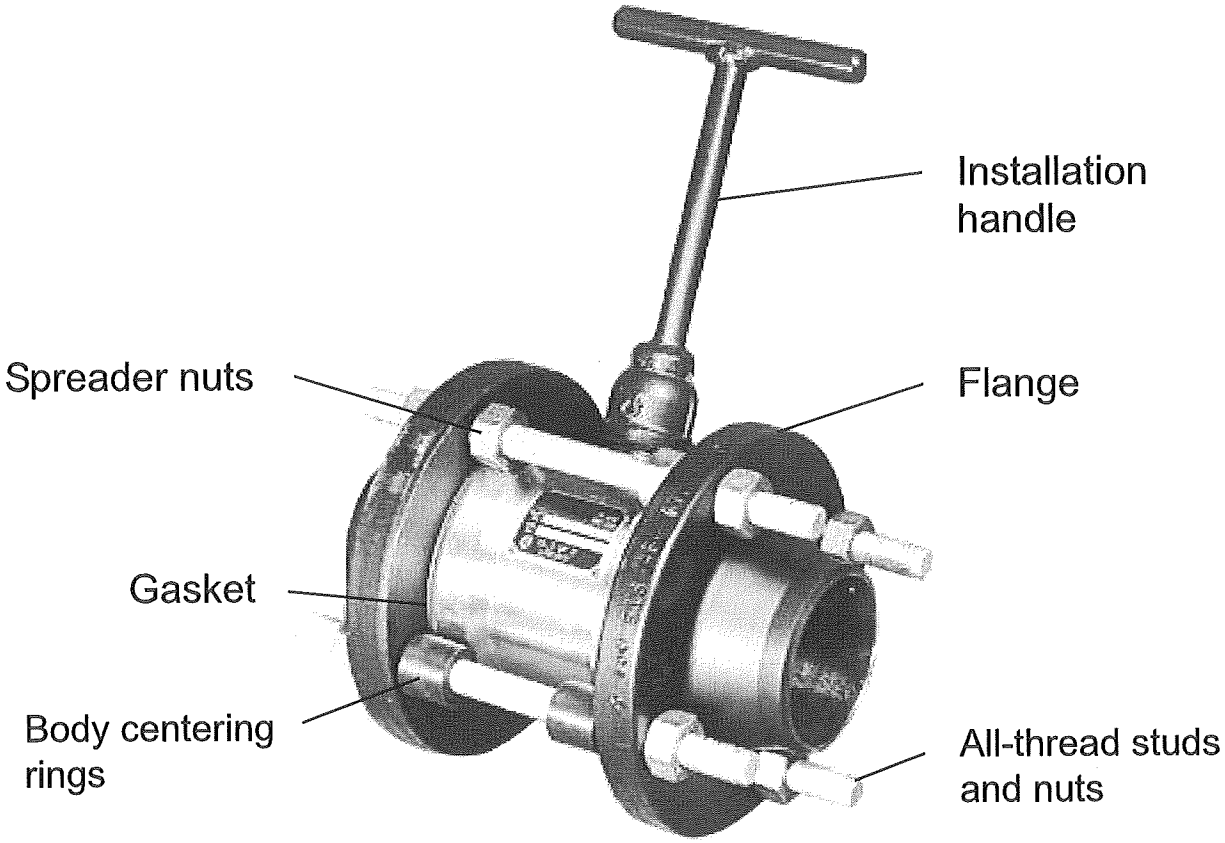

Figure 3—Assembled flowmeter with optional installation handle

Flowmeter identification data and specifications are engraved on the flowmeter body or printed on a stainless steel tag, which is attached to the meter body (Figure 4).

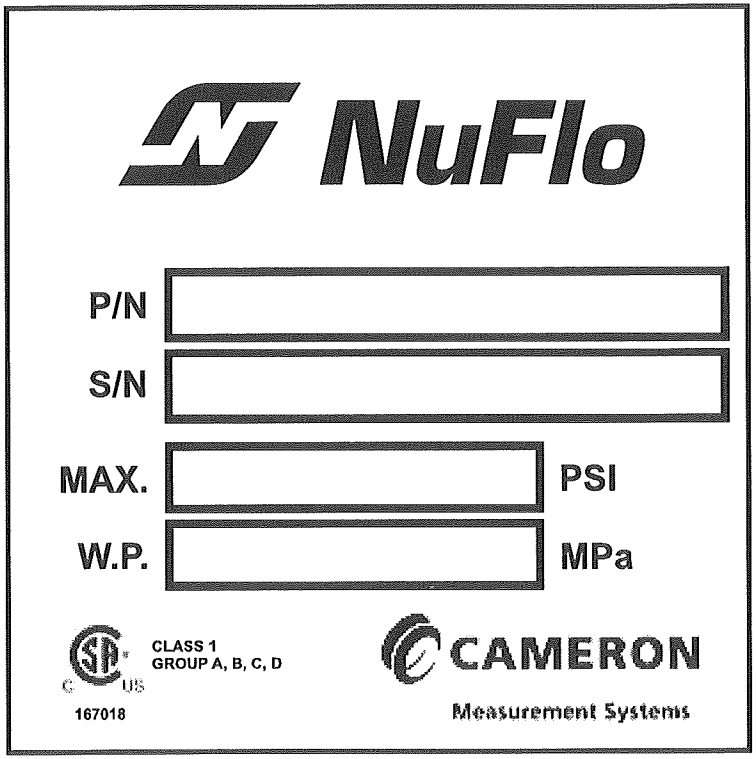

Figure 4—Product identification tag on flowmeter body

Installation

Precautions

The EZ-IN® Series Between-Flange Turbine Flowmeter can be installed vertically or horizontally. In either orientation, the arrow on the meter body must point in the direction of flow in the line.

- Before installing the meter, clean all upstream lines.
- Do not blow out lines with compressed air or gas once the meter has been installed.
- Do not slug the meter with fluid. Carefully fill the line after installing the meter. After startup, keep the meter full of fluid.
- Never exceed the minimum or maximum recommended pressure and temperature limits. See Temperature and Pressure Ratings, page 25.
- Never exceed the maximum recommended flow rate for the meter. See Flow Ranges, page 25.
- Avoid hammer blows or other sharp impacts to the meter that could damage internal parts.

- If the end connection leaks at the time of installation, remove pressure before attempting to tighten the seal.
- The customer is responsible for ensuring chemical compatibility between the flowmeter and any fluids being metered.
- The meter will attain the temperature of the fluid. Use caution when touching the meter body to avoid burns.
- Use appropriate bolts and hardware per ANSI B16.5 and, if applicable, NACE MRO175 / ISO 15156.

Installation Procedure

1. Install a straight section of pipe on either side of the meter. This pipe must be the same size as the meter end connection with a minimum length of 10 pipe diameters upstream and 5 pipe diameters downstream. For example, a flowmeter with a 6-in. end connection requires 6-in. pipe. The section of pipe upstream must be 60 in.; the section downstream must be 30 in.
2. To create a cradle for the meter, assemble all-thread studs, nuts, (centering rings, if purchased), and gaskets to connect the flanges using only

the holes in the bottom half of the flanges (Figure 5, page 13). Install additional nuts inside the flanges, if needed, to separate the flanges while inserting the meter. (See "spreader" nuts in Figure 3, page 8.)

2. Lower the meter between the flanges and align the bore with the flow-line. If centering rings are installed, the meter will rest on them.
3. Install the remainder of the all-thread studs and nuts through the holes in the top half of the flanges.
4. Tighten the nuts.
5. Insert the magnetic pickup assembly into the flowmeter and turn it until it is hand-tight, then back it out ¼ turn. Tighten the lock nut to prevent the pickup from vibrating.

Calibration

The EZ-IN® Series flowmeter is precalibrated with water at the factory and tagged with the calibration factor in pulses per gallon. For maximum accuracy in measuring fluids other than water, calibrate the meter with the desired process fluid in the flowline. This meter can be calibrated using any conventional turbine meter calibration method.

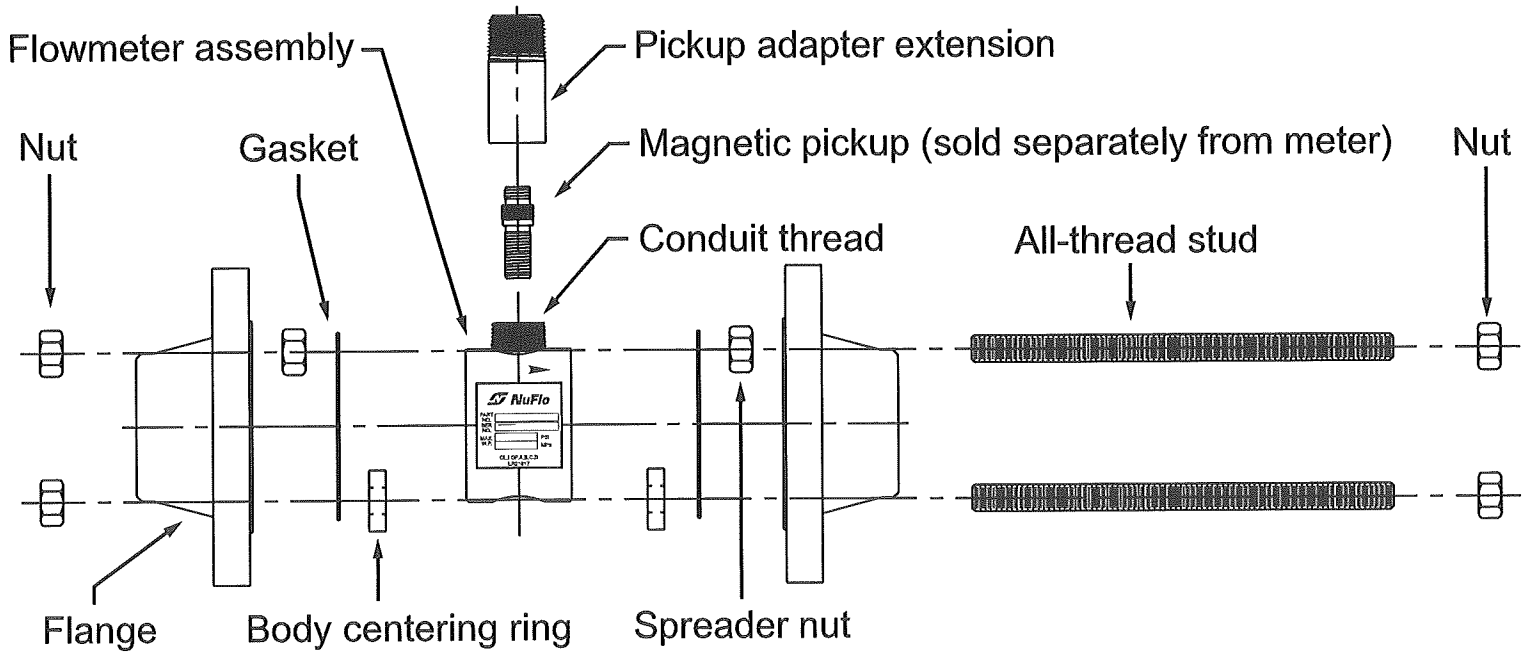

Studs, nuts, gaskets, spreader nuts, a pickup adapter extension, and centering rings are available in a hardware kit. See pages 29 and 30 for part numbers.

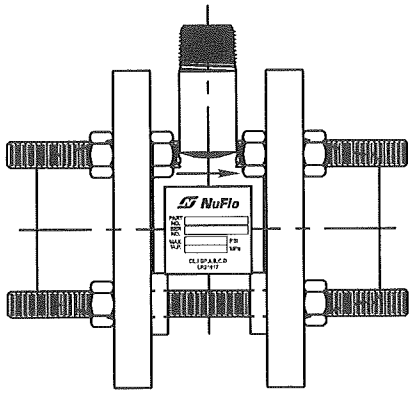

Figure 5—Meter installation diagram

Maintenance and Repairs

If flowmeter readings appear erratic, check the flowmeter for wear or debris. Under normal operation with non-abrasive fluids, flowmeters can provide years of service without repairs. If a flowmeter is exposed to abrasive fluids or long periods of over-range flow rates, an annual check is recommended.

Removing the Meter from the Pipeline

1. Remove all pressure from the line.
2. Remove the magnetic pickup (Figure 5, Page 13) to avoid damaging it.
3. Remove one or more of the flange bolts.
4. Loosen the remaining flange bolt nuts to allow clearance for the meter. If additional "spreader" nuts were installed, tighten them to help free the meter.
5. Lift the meter from between the pipeline flanges, using an installation handle if necessary (Figure 3, page 8).

Disassembling the Hex-Body EZ-IN Meter

Assembly and disassembly procedures vary with the type of flowmeter installed. For instructions on repairing a round-body meter, see page 19.

To disassemble a hex-body meter, follow the steps below.

1. Remove the retaining ring from one end of the meter body.
2. Remove the vane from the meter body. Some slotted meters may require a slight twist of the vane to align the vane with the slot in the meter body. (If the vane is stuck, insert a brass rod through the opposite vane and the rotor and tap on alternate blades of the vane to loosen.)
3. Remove the rotor. Handle with care to prevent damage to the shaft.
4. Remove the retaining ring from the other end of the meter body.
5. Remove the second vane from the meter body.
6. Examine the carbide bearing and rotor shaft. If either part is worn or damaged, replace all internals with a repair kit (page 26).

Reassembling the Hex-Body EZ-IN Meter

- An arrow indicating direction of flow is cast or engraved on the meter body, rotor, and vanes. When the meter is assembled, all arrows must point in the direction of flow through the meter.
- Vanes are designed to fit into four notches inside the meter body. During assembly, both vanes must be positioned such that the vane blade marked with a flow arrow is closest to the bottom of the bore (assuming that the conduit adapter is at the top of the meter).
- Never use force when assembling meter components. The tungsten carbide rotor shaft is brittle and can break under excessive force.

To reassemble a hex-body EZ-IN meter, follow the steps below:

1. Insert a vane into the meter body, ensuring that the flow arrow is pointing in the direction of flow and the marked blade is positioned at the bottom of the bore (Figure 6, page 18). The vane should fit snugly but should not require excessive force to install.
2. Insert a retainer ring behind the vane.
3. Insert the rotor into the opposite end of the meter body, ensuring that the flow arrow is pointing in the direction of flow. Handle the rotor with care to avoid chipping the rotor shaft.
4. Insert the second vane into the meter body, ensuring that the marked blade is positioned at the bottom of the bore. Rotate the rotor if necessary to allow the vane to slip into position. Do not use force to drive the vane into the meter body, as this can result in a broken rotor shaft.
5. Insert a retainer ring behind the vane.
6. Spin the rotor by hand. If the rotor does not turn freely or stops abruptly, disassemble the meter and check the rotor for damage.

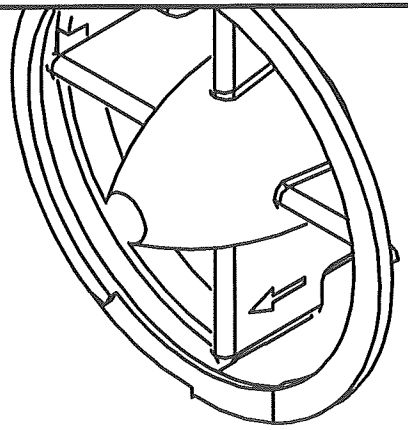

1. Insert the vanes so that the arrow on the blade points in the direction of flow.

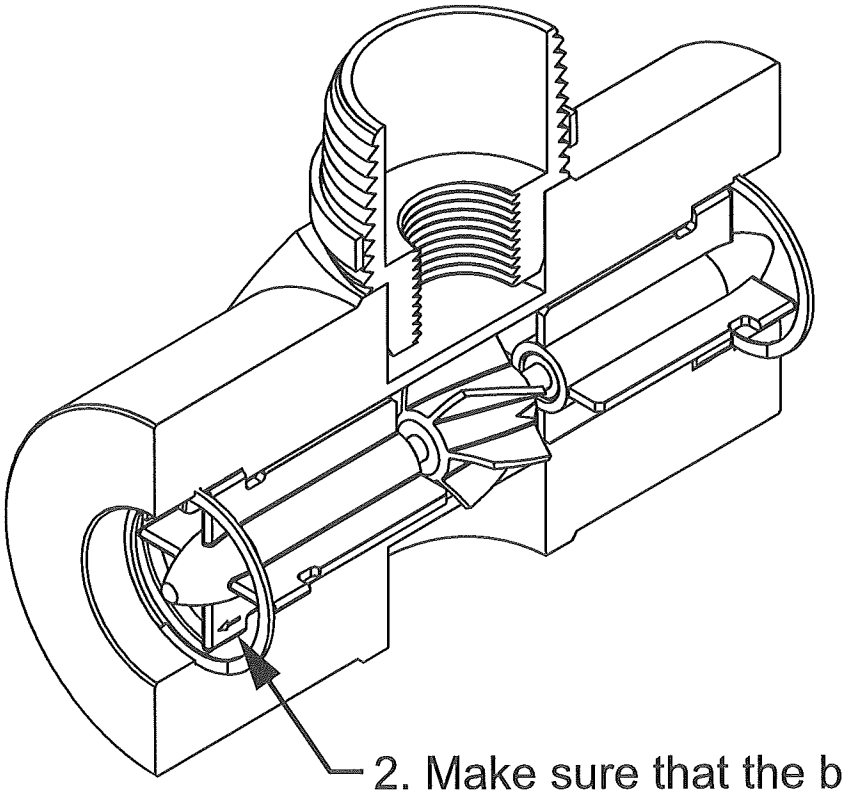

2. Make sure that the blade with the arrow marking is positioned in the notch closest to the bottom of the meter bore.

Figure 6—Positioning of vanes

Disassembling the Round-Body EZ-IN Meter

Assembly and disassembly procedures vary with the type of flowmeter installed. For instructions on repairing a hex-body meter, see page 15.

To disassemble a round-body meter, follow the steps below:

1. Remove the three socket-head capscrews from one end of the meter using a standard Allen wrench.
2. Pull the bearing support straight from the meter body, rotating it if necessary.

Caution—Do not pry on the bearing supports. Internal components could break or shatter. If a bearing support is stuck, soak the meter in solvent or insert a wooden dowel or brass rod from the other end of the meter and gently tap on the support to free it.

---

3. Remove the rotor. Handle with care to prevent damage to the shaft.

4. Remove the three socket-head capscrews from the other end of the meter body.
5. Remove the second bearing support, rotating it if necessary.
6. Examine the carbide bearing and rotor shaft. If either part is worn or damaged, replace all internals with a repair kit (page 27).

Reassembling the Round-Body EZ-IN Meter

- An arrow indicating direction of flow is cast or engraved on the meter body, rotor, and bearing supports. When the meter is assembled, all arrows must point in the direction of flow through the meter.
- During calibration, punch marks are placed on the meter body and the bearing supports to mark the positions of the bearing supports. During assembly, the punch marks must be realigned for maximum accuracy.
- Never use force when assembling meter components. The tungsten carbide rotor shaft is brittle and can break under excessive force.

To reassemble a round-body EZ-IN meter, follow the steps below:

1. Insert a bearing support in the meter body, ensuring that the flow arrow is pointing in the direction of flow and the punch marks on the support and meter body are aligned (Figure 7, page 22).
2. Install the three socket-head capscrews to secure the bearing support, and tighten them with a standard Allen wrench.
3. Insert the rotor into the opposite end of the meter body, ensuring that the flow arrow is pointing in the direction of flow. Handle the rotor with care to avoid chipping the rotor shaft.
4. Insert the the second bearing support into the meter body, aligning punch marks as described in step 1.
5. Install the three socket-head capscrews to secure the bearing support, and tighten them with a standard Allen wrench.
6. Spin the rotor by hand. If the rotor does not turn feely or stops abruptly, disassemble the meter and check the rotor for damage.

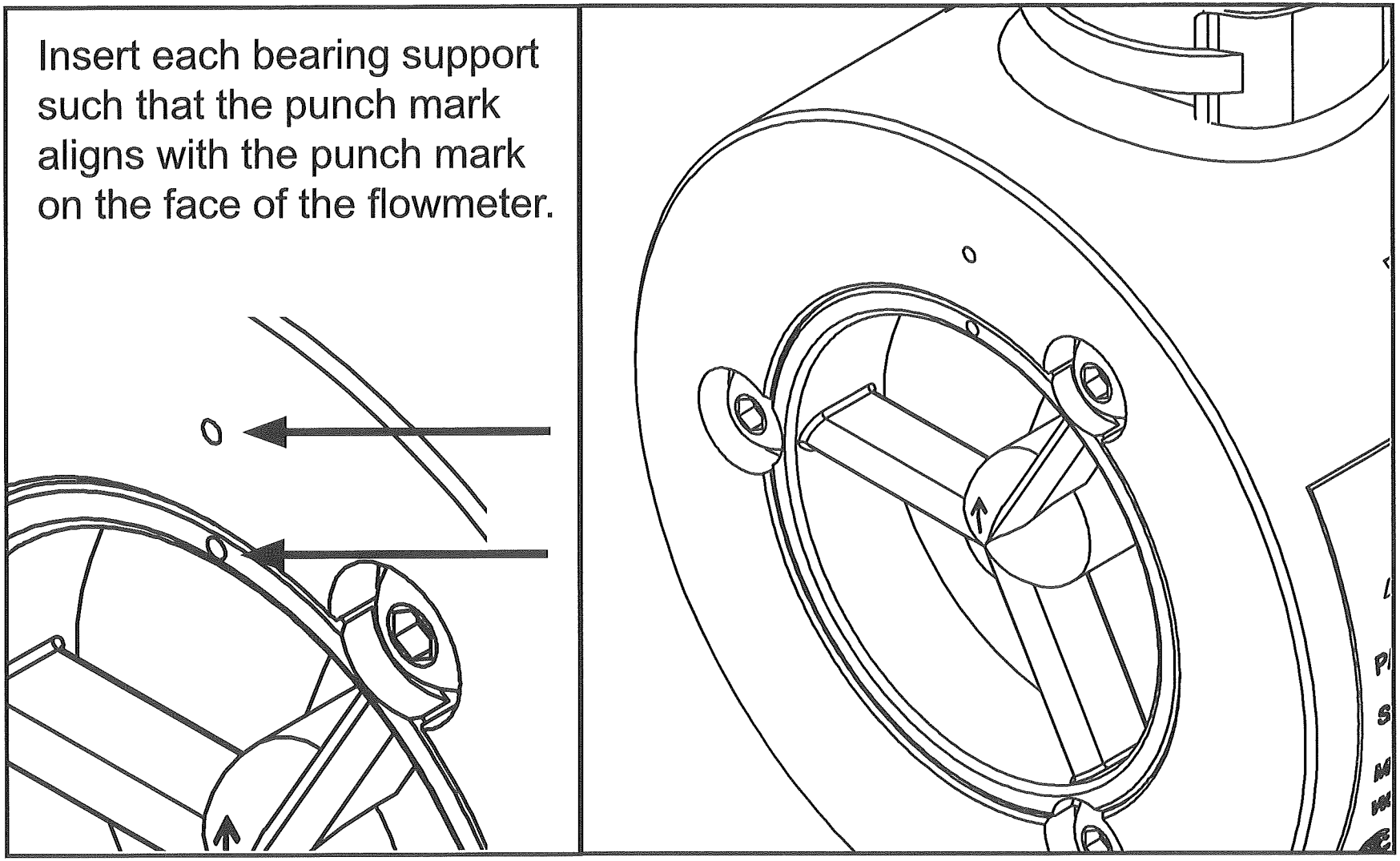

Figure 7—Positioning of bearing supports

Returning the Meter to the Pipeline

1. Return the meter to the line, using the body centering rings (Figure 3, page 8) to align the meter with the inside diameter of the flanges. Carefully align the flange gaskets with the flanges to help prevent gasket damage. Use the spreader nuts, if necessary, to position the meter between the flange gaskets.
2. Reinstall the bolts that were removed from the flanges when the meter was taken out of the line.
3. Loosen the flange spreader nuts until they no longer are engaged.
4. Tighten the nuts on the flange bolts until they form a seal on the flange gasket.
5. Fill the meter with fluid, following the precautions on pages 10 and 11.

Specifications and Parts Lists

Temperature and Pressure Ratings

Flange Classification	CL 150	CL 300	CL 600	CL 900	CL 1500	CL 2500
Design-Operating Temperature Range	Maximum Working Pressure psi (mPa)					
-20 to l00°F	285	740	1480	2220	3705	6170
(-28.8 to 37.7°C)	(1.96)	(5.1)	(10.2)	(15.3)	(25.5)	(42.5)
200°F	260	680	1360	2035	3395	5625
(93.3°C)	(1.79)	(4.7)	(9.38)	(14.03)	(23.4)	(38.8)
400°F	200	635	1265	1900	3170	5280
(204.4°C)	(1.38)	(4.38)	(8.72)	(13.1)	(21.8)	(36.4)
450°F	185	620	1235	1855	3092	5152
(232°C)	(1.28)	(4.27)	(8.5)	(12.79)	(21.32)	(35.52)

Flow Ranges

Meter Bore Size in.	Linear Flow Ranges (based on water)[a]			Nominal Calibration Factor pulses/gal (pulses × 1000/m³)	Max. Output Frequency pulses/sec	Δp at Max. Flow psi (kPa)
	gal/min	m³/h	B/D			
3/8	0.46 to 3	0.104 to 0.68	10 to 100	22,000 (5812)	1,100	4 (28)
1/2	0.80 to 7.5	0.182 to 1.70	25 to 250	14,500 (3830)	1,815	12 (83)
3/4	2 to 15	0.45 to 3.41	68 to 515	2,950 (780)	740	18 (124)
7/8	3 to 30	0.68 to 6.81	100 to 1,000	2,350 (621)	1,175	20 (138)
1	5 to 50	1.14 to 11.36	170 to 1,700	900 (238)	750	20 (138)
1 1/2	15 to 180	3.41 to 40.88	515 to 6,000	325 (86)	975	16 (110)
2	40 to 400	9.09 to 90.85	1,300 to 13,000	55 (14.5)	365	22 (152)
3	80 to 800	18.17 to 181.7	2,750 to 27,500	57 (15.2)	760	16 (110.4)
4	100 to 1,200	22.71 to 272.55	3,400 to 41,000	30 (7.9)	600	10 (69)
6	250 to 2,500	56.78 to 567.82	8,600 to 86,000	7 (1.8)	290	10 (69)
8	350 to 3,500	79.49 to 794.94	12,000 to 120,000	3 (0.8)	175	6 (41)

[a] The linear flow range of liquids with non-lubricating characteristics is limited to the upper 60% of rating.

Internal Components Repair Kit for Hex-Body EZ-IN Meters

Meter Bore Size in.	End Connection Size in.	Standard Grade Linearity ± 1.0%	Industrial Grade Linearity ± 0.5 %
3/8	1	9A-100003521[a]	9A-100003378[b]
1/2	1	9A-100003531	9A-100003379
3/4	1	9A-100003449	9A-100003380
7/8	1	9A-100005124	9A-100061059
1	1	9A-100003527	9A-100003381

[a] Linearity for a 3/8-in. bore x 1-in. end connection, standard grade is ± 2.0%.

[b] Linearity for a 3/8-in. bore x 1-in. end connection, industrial grade is ± 1.0%.

Kit includes 1 rotor, 2 vane assemblies, 2 retainer rings, and a calibration tag.

Repair kits shown are suitable for temperatures of -20 to 250°F (-28.8 to 121.1°C). If operating temperatures are likely to exceed this range, contact factory for the appropriate repair kit part number.

Internal Components Repair Kit for Round-Body EZ-IN Meters

Meter Bore Size in.	End Connection Size in.	Standard Grade Linearity ± 1.0%	Industrial Grade Linearity ± 0.5 %
3/8	2	9A-100079691[a]	—
1/2	2	9A-100005122	9A-100062982
3/4	2	9A-100079674	9A-100062983
7/8	2	9A-100079811	9A-101209539
1	2	9A-100005123	9A-100062984
1 1/2	2	9A-100005099	9A-100062985
2	2	9A-100003553	9A-100003549
2	3	2350401-01	2350419-01
3	3	9A-100003540	9A-100012104
4	4	9A-100003554	9A-100062986
6	6	9A-100012091	9A-100062987
8	8	9A-100063004	9A-100062988

[a] Linearity for a 3/8-in. bore x 2-in. end connection, standard grade is ± 2.0%.

Kit includes 1 rotor, 2 bearing supports, six socket-head screws, and a calibration tag.

Repair kits shown are suitable for temperatures of -20 to 250°F (-28.8 to 121.1°C). If operating temperatures are likely to exceed this range, contact factory for the appropriate repair kit part number.

Retainer Rings for Hex-Body EZ-IN Meters (Purchased Separately from Repair Kit)

Meter Bore Size in.	End Connection Size in.	Retainer Ring Part Number
3/8	1	9A-100003414
1/2		
3/4		
7/8	1	9A-100003415
1		

Hardware Kits and Centering Rings (Raised Face Flanges)

Hardware Kits (see Note A)					
End Connection Size (in.)	CL 150	CL 300	CL 600	CL 900	CL 1500
1	9A-100014135	9A-100009578	9A-100009578	9A-100079754	9A-100079754
2	9A-100003555	9A-100003556	9A-100003556	9A-100003557	9A-100003557
3	9A-100003558	9A-100007860	9A-100007860	9A-100003559	9A-100012105
4	9A-100003560	9A-100003561	9A-100003562	9A-100063005	9A-100063006
6	9A-100063007	9A-100063008	9A-100012106	9A-100063009	9A-100063010
8	9A-100063011	9A-100063012	9A-100063013	9A-101209537	9A-101209536

Note A: Includes studs, nuts, gaskets, spreader nuts, a pickup adapter extension, and centering rings. (Kit does not include flanges.)

Centering Rings Only (see Note B)					
End Connection Size (in.)	CL 150	CL 300	CL 600	CL 900	CL 1500
1	9A-100079753	9A-100079752	9A-100079752	9A-100079751	9A-100079751
2	9A-100007974	9A-100007973	9A-100007973	9A-100014124	9A-100014124
3	9A-100079569	9A-100014122	9A-100014122	9A-100079568	9A-100014120
4	9A-100014123	9A-100014122	9A-100014121	9A-100014120	9A-100079567
6	9A-100079566	9A-100079565	9A-100079564	9A-100079563	9A-100079562
8	9A-100079561	9A-100079560	9A-100079559	9A-101209538	9A-100079558

Note B: Four centering rings are required for installation.

Hardware Kits (Ring Joint Flanges)

End Connection Size (in.)	CL 900	CL 1500	CL 2500
2	9A-100014145	9A-100014145	9A-100080024
3	9A-101213513	9A-100079971	9A-101203294
4	9A-100079986	9A-100079960	9A-101209541
6	9A-100080034	9A-100080023	N/A
8	9A-101215223	2295272-01	N/A

[a] Hardware kit includes studs, nuts, seal rings, spreader nuts, and a pickup adapter extension. (Kit does not include flanges).

Magnetic Pickups and Replacement Lock Nuts

Meter Bore Size	Temperature Range (°F)	Magnetic Pickup Part No.
3/8 through 3/4 in.[a]	-67 to 250	2295367-01
	-67 to 450	2296313-01
7/8 through 8 in.[a]	-67 to 250	9A-100002077
	-67 to 450	9A-100002076
Replacement lock nut		9A-100028944

[a] Each magnetic pickup is shipped with a lock nut.

Warranty—Limitation of Liability

WARRANTY - LIMITATION OF LIABILITY: Seller warrants only title to the products, software, supplies and materials and that, except as to software, the same are free from defects in workmanship and materials for a period of one (1) year from the date of delivery. Seller does not warranty that software is free from error or that software will run in an uninterrupted fashion. Seller provides all software "as is". THERE ARE NO WARRANTIES, EXPRESS OR IMPLIED, OF MERCHANTABILITY, FITNESS FOR A PARTICULAR PURPOSE, OR OTHERWISE WHICH EXTEND BEYOND THOSE STATED IN THE IMMEDIATELY PRECEDING SENTENCE. Seller's liability and Buyer's exclusive remedy in any case of action (whether in contract, tort, breach of warranty or otherwise) arising out of the sale or use of any products, software, supplies, or materials is expressly limited to the replacement of such products, software, supplies, or materials on their return to Seller or, at Seller's option, to the allowance to the customer of credit for the cost of such items. In no event shall Seller be liable for special, incidental, indirect, punitive or consequential damages. Seller does not warrant in any way products, software, supplies and materials not manufactured by Seller, and such will be sold only with the warranties that are given by the manufacturer thereof. Seller will pass only through to its purchaser of such items the warranty granted to it by the manufacturer.

MEASUREMENT SYSTEMS

HOUSTON HEAD OFFICE | **281.582.9500**

NORTH AMERICA | **1.800.654.3760**
ms-us@c-a-m.com

ASIA PACIFIC | **+603.5569.0501**
ms-kl@c-a-m.com

EUROPE, MIDDLE EAST & AFRICA | **+44.1243.826741**
ms-uk@c-a-m.com

USA • CANADA • UK • CHINA • UAE • ALGERIA
MALAYSIA • INDIA • RUSSIA • www.c-a-m.com/flo

CAMERON

ALBERTA STRAINERS LTD.

9577 - 60 AVENUE
EDMONTON, ALBERTA
CANADA, T6E 0C2
PHONE: (780) 448-0258 FAX: (780) 435-7146

ALTA STRAINERS

INSTALLATION AND MAINTENANCE INSTRUCTIONS

INSTALLATION:

"Y" STRAINERS SHOULD BE INSTALLED IN A HORIZONTAL LINE OR A VERTICAL LINE WITH THE FLOW GOING DOWN.
BASKET STRAINERS SHOULD BE INSTALLED IN A HORIZONTAL LINE.
IN BOTH STYLES ROOM MUST BE ALLOWED FOR SCREEN REMOVAL.
IDEALLY, PRESSURE GAUGES SHOULD BE INSTALLED UPSTREAM AND DOWNSTREAM OF A STRAINER TO INDICATE PRESSURE DROP CAUSED BY A PARTIALLY PLUGGED SCREEN.

MAINTENANCE:

DETERMINE HOW LONG IT TAKES FOR THE SCREEN TO BECOME APPROXIMATELY 1/3 PLUGGED AND REMOVE AND CLEAN AT THE SAME TIME INTERVAL, OR WHEN THE PRESSURE GAUGES, IF INSTALLED, INDICATE A PRESSURE DROP ACROSS THE STRAINER.
IF A "Y" STRAINER HAS BEEN PROVIDED WITH A BLOW-DOWN VALVE ON THE DRAIN CONNECTION THEN IT MAY BE OPENED TO BLOW DOWN SEDIMENT.

SPARE PARTS:

A SPARE SCREEN AND COVER GASKET ARE THE ONLY PARTS REQUIRED TO REFURBISH A STRAINER.
A SPARE SCREEN WILL DECREASE SHUT-DOWN TIME WHILE THE PLUGGED SCREEN IS BEING CLEANED.

ALTA	MODEL NYF 150 150# ANSI CARBON STEEL RAISED FACE FLANGED "Y" STRAINER	DRAWING A 120 REV 1

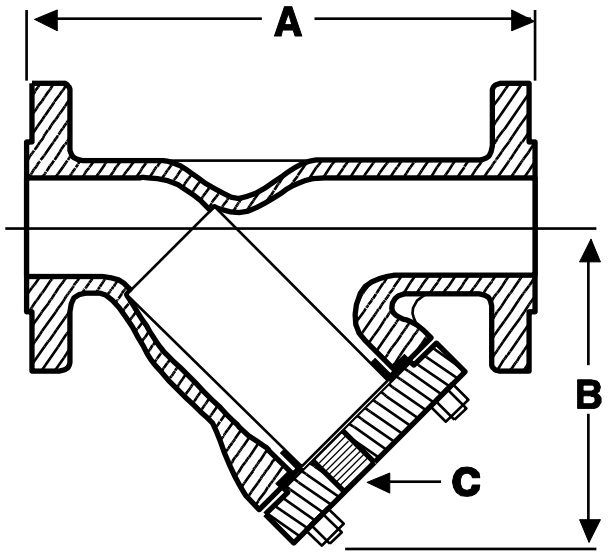

DESCRIPTION	MATERIAL
BODY	ASTM A216 GR. WCB
COVER	ASTM A216 GR. WCB
STUD	ASTM A193 GR. B7
NUT	ASTM A194 GR. 2H
GASKET	NON ASBESTOS
SCREEN 1" TO 1 1/2"	304 SS 1/32 PERF
SCREEN 2" TO 12"	304 SS 1/8 PERF

TEMPERATURE		WORKING PRESSURE	
C	F	kPa	P.S.I.
-29 to 38	-20 to 100	1965	285
95	200	1790	260
150	300	1585	230
200	400	1380	200
260	500	1170	170

FLANGES ARE IN ACCORDANCE WITH ANSI B16.5
ALL STRAINERS ARE INDIVIDUALLY HYDROSTATICALLY TESTED TO ANSI B16.5

SIZE		DIMENSIONS						SCREEN REMOVAL		NET WEIGHT	
		A		B		C					
mm	in.	mm	in.	mm	in.	mm	in.	mm	in.	Kg.	Lbs.
25	1	162	6 3/8	127	5	15	1/2	152	6	5	11
40	1 1/2	197	7 3/4	133	5 1/4	15	1/2	165	6 1/2	7.7	17
50	2	200	7 7/8	152	6	20	3/4	165	6 1/2	10.4	23
80	3	254	10	177	7 1/2	25	1	228	9	19	42
100	4	308	12 1/8	279	11	40	1 1/2	406	16	33	73
150	6	470	18 1/2	368	14 1/2	50	2	508	20	64	140
200	8	549	21 5/8	525	20 5/8	50	2	812	32	116	255
250	10	660	26	584	23	50	2	889	38	161	355
300	12	762	30	660	26	50	2	1090	43	209	490

FEATURES

BODY HAS A MACHINED SEAT TO HOLD SCREEN SECURELY.

COVER HAS A MACHINED SCREEN HOLDER TO ALIGN SCREEN DURING INSTALLATION AND TO RETAIN SEDIMENT WHEN COVER IS REMOVED.

BODY IS MACHINED TO HOLD COVER GASKET IN A BLOW-OUT PROOF DESIGN.

FLANGES ARE BACK FACED OR SPOT FACED.

ECHOTEL® 961/962

Ultrasonic level switches

DESCRIPTION

The Echotel® 961/962 series utilizes pulse signal technology to detect high or low level alarm(s) in a broad range of viscous to light liquids. Pulsed signal technology provides superior performance in applications suffering from foam, aeration, heavy turbulence and suspendid solids.

The Echotel® **961** has a tip sensitive setpoint and is ideally used as high or low level alarm.

The Echotel® **962** offers 2 setpoints on the same transducer, a tip sensitive setpoint and a second setpoint via a flow-through upper gap. The unit is used for level alarm or to control a pump in an auto fill/empty mode.

The Echotel® 961/962 is equipped with advanced diagnostics that continuously check the transducer and electronics. The diagnostics also alarm for electrical noise interference from external sources.

FEATURES

- No calibration
- 2 wire loop powered with mA output or AC/DC line powered with integrated relay(s)
- Continuous selftest with selectable error output
- LED identification for:
  - process alarm
  - error of transducer, electronics or electrical noise interference
  - wet/dry status of transducer
- Push buttons for manual testing of alarm and error signals
- Adjustable time delay up to 45 s
- Metal and plastic transducers
- Suited for SIL 1 and SIL 2 loops (full FMEDA report available)

APPLICATIONS

- VESSELS: Any mounting position.
- PROCESS CONDITIONS: Unaffected by
  - shifting dielectric, density, or pH of the liquid
  - presence of foam, turbulence, visible vapours
  - fast drain/fill rates
  - transducer coating and air bubbles
  - vacuum conditions.

Loop or line powered

PRESSURE EQUIPMENT DIRECTIVE 97/23/EC



Flanged 961
with metal transducer

Threaded 962
with metal transducer

AGENCY APPROVALS

Agency	Approval
ATEX ①	II 1 G Ex ia IIC T5 Ga, intrinsically safe II 1/2 G Ex d IIC T6 Ga/Gb, flameproof enclosure
TÜV	WHG §19
IEC	Ex d IIC T6 Ga/Gb
AIB	VLAREM II - 5.17.7
FM/CSA ②	
Russian Authorisation Standards ②	
Other approvals are available, consult factory for more details	

① Only for metal transducers.
② Consult factory for proper model numbers and classifications

PRINCIPLE OF OPERATION

The Echotel® 961/962 operates on a two crystal pulsed or "transmit-receive" principle which applies a high frequency electronic burst to the transmit crystal. The signal is then converted into ultrasonic energy and transmitted across the sensing gap towards the receiver crystal. When there is air in the gap, the high frequency ultrasonic energy will be attenuated, thereby not allowing the energy to be received. When there is liquid in the gap, the ultrasonic energy will propagate across the gap and the current shift or relay output will indicate a reception of the signal.

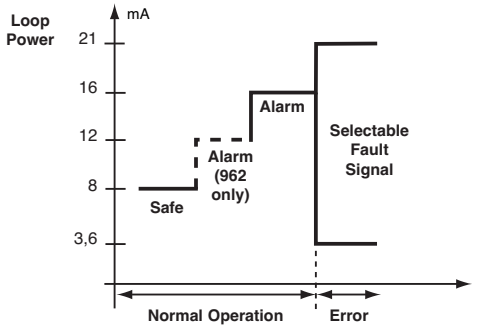

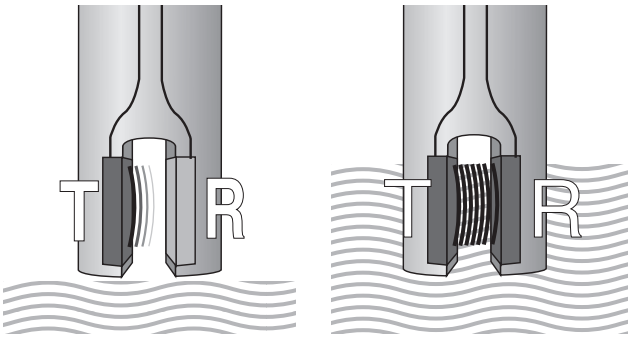

Air/Gas
Dry gap

Liquid
Wet gap

MOUNTING

Ambient temperature: -40°C (-40°F) to +70°C (+160°F)

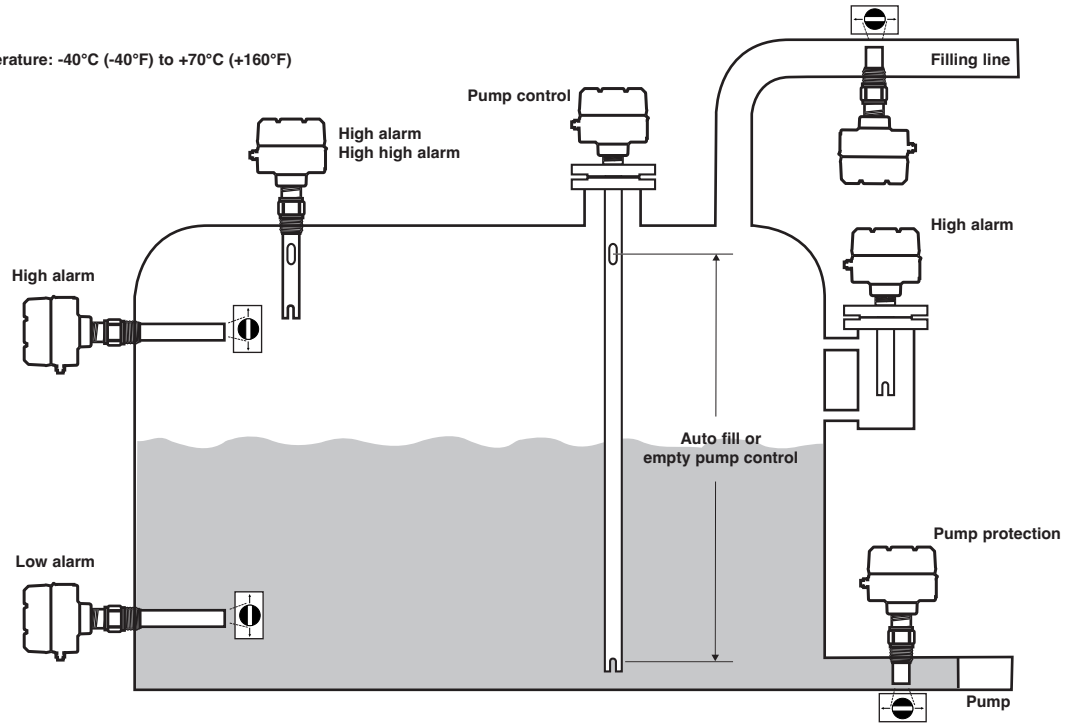

APPLICATIONS

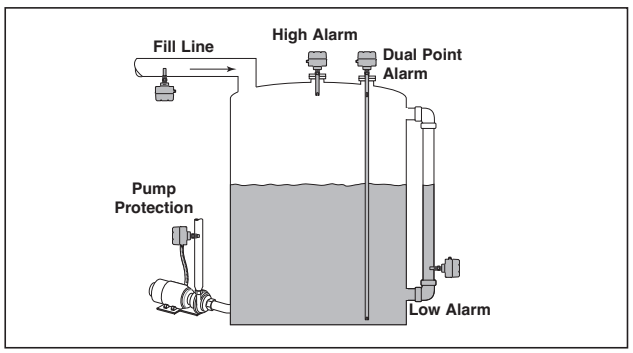

High/Low Level Alarm

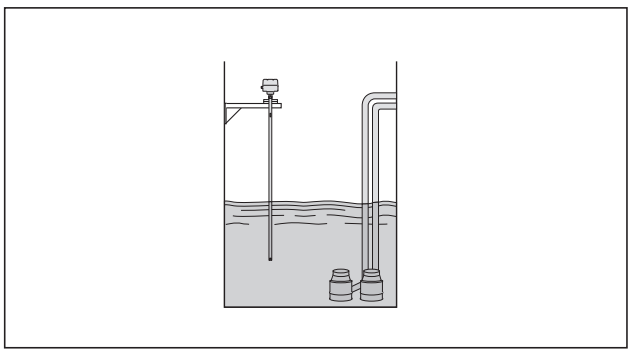

Pump Control

ELECTRONICS SPECIFICATIONS

Description		Specification
Input Voltage	mA - version	2 wire loop powered, 11 - 35 V DC
	Relay - version	102 - 265 V AC 50/60 Hz or 18 - 32 V DC
Power Consumption		< 3 Watt (relay version) – < 1 Watt (mA version)
Output	mA - version	**961**: 8 mA (safe), 16 mA (alarm) ± 1 mA **962**: 8 mA (safe), 12 mA (lower gap alarm), 16 mA (upper gap alarm) ± 1 mA **961/962**: ≤ 3,6 or ≥ 22 mA error signal
	Relay - version	**961**: one 5 A DPDT relay **962**: two 5 A SPDT relays **961/962**: one 5 A SPDT malfunction relay
Time delay		0,5 to 45 s adjustable (in addition to transducer response time)
Indication		LED's for process alarm status, malfunction (error of transducer, electronics or electrical noise interference) and wet/dry status of transducer (961 with relay only)
Selftest	Automatic	Continuously verifies electronics, transducer and noise interference
	Manual	Via pushbutton for checking alarm output(s) and error output/function
Housing material		IP66, cast aluminium or cast stainless steel
Approvals		ATEX II 1 G Ex ia IIC T5 Ga, intrinsically safe (current shift units with metal transducers) ATEX II 1/2 G Ex d IIC T6 Ga/Gb, flameproof enclosure (units with metal transducers) IEC Ex d IIC T6 Ga/Gb Overfill prevention TÜV - WHG § 19 / VLAREM II 5.17.7 Other approvals are available, consult factory for more details
SIL (Safety Integrity Level)		Functional safety to SIL 2 in accordance to IEC 61508 – SFF > 90 % Full FMEDA report and declaration sheets available at request
Electrical data		Ui = 28,4 V, Ii = 94 mA, Pi = 0,67 W (mA version)
Equivalent data		Ci = 10,4 nF (961) / Ci = 60 nF (962), Li = 400 μH (mA version)
Shock/Vibration		ANSI/ISA-S71.03 Class SA1 (shock), ANSI/ISA-S71.03 Class VC2 (vibration)
Net weight		Alu: 1 kg (2.2 lbs) – electronics only SST: 2,5 kg (5.5 lbs) – electronics only

PERFORMANCE

Description	Specification
Response time	0,5 s typical
Repeatability	± 2 mm (0.078")
Ambient Temperature	-40 °C to +70 °C (-40 °F to +160 °F)
Humidity	0-99 %, non-condensing
Electromagnetic Compatibility	Meets CE requirements (EN 61326: 1997 + A1 + A2) and NAMUR NE 21

TRANSDUCER SPECIFICATIONS

Description	Plastic transducers	Metal transducers
Material	CPVC Kynar® (PVDF)	316/316L SST (1.4401/1.4404) Hastelloy® C (2.4819) Monel® (2.4360)
Mounting	Threaded (NPT/BSP) – Flanged (ANSI - EN (DIN))	
Actuation length	From 5 cm up to 330 cm (2" up to 130")	From 3 cm up to 330 cm (1.2" up to 130")
Process temp. (consult temp/ press. graphs)	-40 °C to +120 °C (-40 °F to +250 °F) – PVDF -40 °C to +80 °C (-40 °F to +180 °F) – CPVC	-40 °C to +165 °C (-40 °F to +325 °F) – standard -80 °C to +120 °C (-110 °F to +250 °F) – low temperature version in 316/316L SST
Max pressure (consult temp/ press. graphs)	13,8 bar @ +40 °C (200 psi @ +100 °F) for NPT threaded units	82,8 bar (1200 psi) for Monel transducers Consult temp/press. graphs for other materials
	Flanged models are downrated to the design pressure of the selected flange	

ELECTRONICS



Loop powered 961



Line powered 961

FUNCTIONS

Adjustable time delay:
The Echotel® 961/962 provides a fast response time of typically < 1s. In applications with turbulent or boiling surfaces, this may lead to scattering of the output. For these applications, the user can adjust via a potentiometer a time delay from 1 to 45 s and avoid scatter of the output.

Pushbuttons for manual check: The alarm output and the error signal of the Echotel® 961/962 can be manually checked via pushbuttons. For loop powered units, the loop test pushbutton will sequentially check the shift of loop current. For relay operated units, the level test pushbutton will make the relay change from energized to de-energized status or vice versa. Pressing the fault/malfunction pushbutton stops all transmit pulses, which simulates an electronics failure, and tests the selected output signal.

LED identification:
Alarm LEDS report alarm status. For 962 models, the alarm status per gap is reported. A separate LED on the 961 model (with relay output), reports independently from the alarm status, whether the gap is immersed or not.

Fault LED reports a malfunction of the unit. The blinking sequence of the LED identifies the failure (electronics, transducer or electrical noise interference).
Malfunction LED (only for units with relay) confirms that the malfunction relay is energized in normal operation

Pump Control (only 962 model with relays):
The model 962 with relays can be set for pump control or level alarm. By selecting pump control (PC), the unit will latch its 2 SPDT relays and provide automatic fill or drain function between its 2 setpoints. In level alarm mode (LC), the unit will detect either high and high-high or low and low-low level alarm.

Selectable error signal:
The error signal of loop powered units (961/962) can be set for either 3,6 or 22 mA. The separate malfunction relay of the 961 can be set for independent or joint operation with the alarm relay. The 962 with relays will always report a malfunction via the alarm relay.

ELECTRICAL WIRING

Loop powered

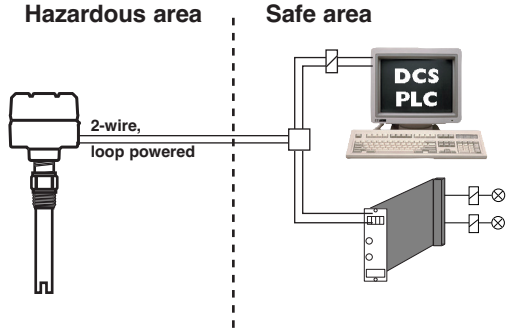

Line powered

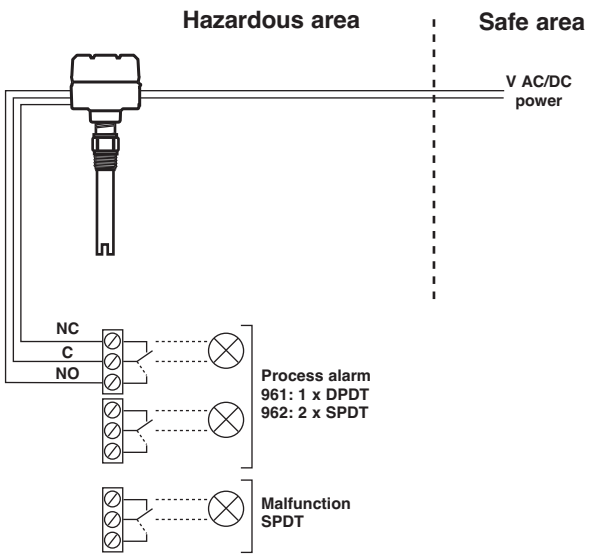

EXPEDITE SHIP PLAN (ESP)

Several models are available for quick shipment, within max. 4 weeks after factory receipt of purchase order, through the Expedite Ship Plan (ESP).
Models covered by ESP service are conveniently colour coded in the selection data charts.
To take advantage of ESP, simply match the colour model number codes (standard dimensions apply).
ESP service may not apply to orders of ten units or more. Contact your local representative for lead times on larger volume orders, as well as other products and options.

ECHOTEL® 961 / 962 – ELECTRONICS

Selection data

A complete measuring system consists of:

1. Echotel® electronics
2. Echotel® transducer

1. Order code for Echotel® electronics

BASIC MODEL NUMBER

9 6 1	Echotel® 961 electronics for single setpoint 9M1 transducers
9 6 2	Echotel® 962 electronics for dual setpoint 9M2 transducers

INPUT POWER

5 0 A	24 V DC 2-wire loop powered electronics with current shift output
2 D A	18 - 32 V DC line powered electronics with 5 A gold flash relay(s) output
7 D A	102 - 265 V AC line powered electronics with 5 A gold flash relay(s) output

ACCESSORIES

0	Blind housing cover
1	Housing cover with glass window (for aluminium housings only)

MOUNTING

0	Integral mount electronics

APPROVALS

Units with current shift output (digit 5 = 0)

A	ATEX II 1 G Ex ia IIC T5 Ga, intrinsically safe
C	ATEX II 1/2 G / IEC Ex d IIC T6 Ga/Gb, flameproof enclosure
1	Weatherproof

Units with relay output (digit 5 = D)

C	ATEX II 1/2 G / IEC Ex d IIC T6 Ga/Gb, flameproof enclosure
3	Weatherproof

HOUSING / CABLE ENTRY

1	Cast aluminium housing with M20 x 1,5 cable entry (2 entries – one plugged)
0	Cast aluminium housing with 3/4" NPT cable entry (2 entries – one plugged)
3	Cast stainless steel with M20 x 1,5 cable entry (2 entries – one plugged)
2	Cast stainless steel with 3/4" NPT cable entry (2 entries – one plugged)

[ ] 9 6 [ ] [ ] [ ] A [ ] 0 [ ] [ ] **complete order code for Echotel® electronics**

→ X = product with a specific customer requirement

DIMENSIONS IN mm (inches)

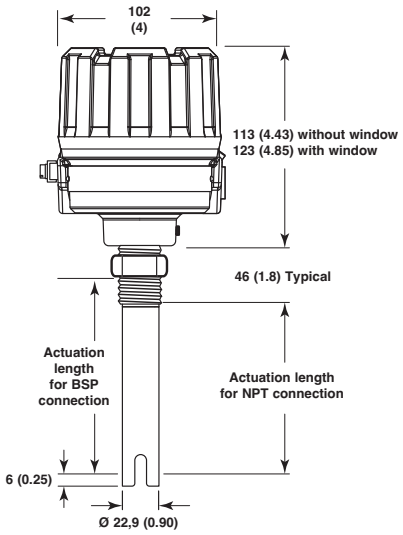

961 - Threaded connection

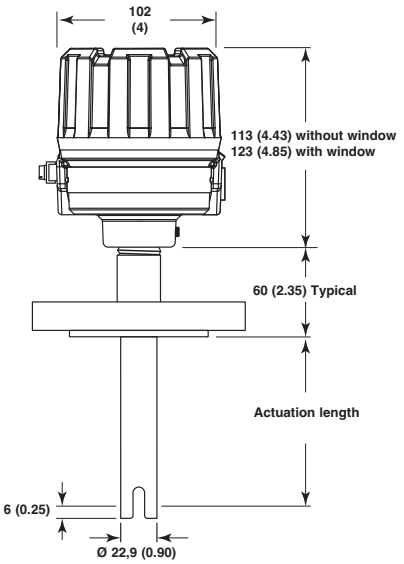

961 - Flanged connection

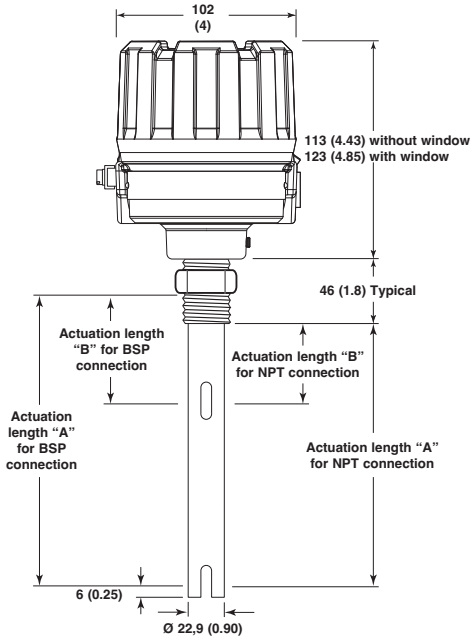

962 - Threaded connection

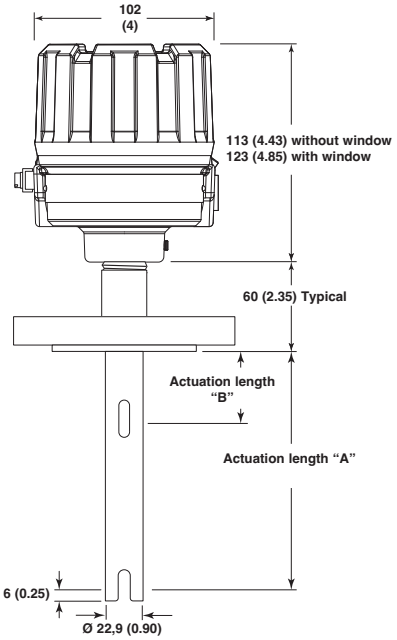

962 - Flanged connection

2. Order code for Echotel® transducer

BASIC MODEL NUMBER

9 M 1	Echotel® 961 transducer with single setpoint
9 M 2	Echotel® 962 transducer with dual setpoints

TRANSDUCER MATERIALS (use only metal transducers for hazardous area)

A	316/316L (1.4401/1.4404) stainless steel
B	Hastelloy® C (2.4819) – only available with 9M1
C	Monel® (2.4360) – only available with 9M1
P	CPVC
R	Kynar® (PVDF) – only available with 9M1

PROCESS CONNECTION

Threaded (plastic transducers are only available with 3/4" NPT connection)

1 1	3/4" NPT
2 1	1" NPT
2 2	1" BSP (G 1")

ANSI Flanges for metal transducers

2 3	1"	150 lbs	ANSI RF
2 4	1"	300 lbs	ANSI RF
2 5	1"	600 lbs	ANSI RF
3 3	1 1/2"	150 lbs	ANSI RF
3 4	1 1/2"	300 lbs	ANSI RF
3 5	1 1/2"	600 lbs	ANSI RF
4 3	2"	150 lbs	ANSI RF
4 4	2"	300 lbs	ANSI RF
4 5	2"	600 lbs	ANSI RF

EN (DIN) Flanges for metal transducers

B B	DN 25	PN 16/25/40	EN 1092-1 Type A
B C	DN 25	PN 63/100	EN 1092-1 Type B2
C B	DN 40	PN 16/25/40	EN 1092-1 Type A
C C	DN 40	PN 63/100	EN 1092-1 Type B2
D A	DN 50	PN 16	EN 1092-1 Type A
D B	DN 50	PN 25/40	EN 1092-1 Type A
D D	DN 50	PN 63	EN 1092-1 Type B2
D E	DN 50	PN 100	EN 1092-1 Type B2

ANSI Flanges for plastic transducers①

2 3	1"	150 lbs	ANSI RF②
3 3	1 1/2"	150 lbs	ANSI RF②
4 3	2"	150 lbs	ANSI RF②

EN (DIN) Flanges for plastic transducers①

B A	DN 25	PN 16	EN 1092-1 Type A
C A	DN 40	PN 16	EN 1092-1 Type A
D A	DN 50	PN 16	EN 1092-1 Type A

① CPVC flanges for CPVC transducers, Kynar® cladded SST flanges for Kynar® transducers
② FF (flat face) flanges for CPVC transducers

SENSOR TYPE

A	Standard sensor: min -40 °C / max +165 °C (-40 °F / +325 °F)
C	Low temperature sensor: min -80 °C / max +120 °C (-110 °F / +250 °F) – only available with 9M1-A

ACTUATION LENGTH – specify per cm (0.39") increment
Total insertion length = actuation length + 6 mm (0.25")

9M1 transducers - ESP

0 0 5	5 cm (2")
0 1 0	10 cm (4")
0 2 0	20 cm (8")
0 3 0	30 cm (12")

9M1 transducers - selectable

0 0 3	Minimum 3 cm (1.2") – for metal transducers with NPT connections only
0 0 5	Minimum 5 cm (2") – for all other connections
3 3 0	Maximum 330 cm (130")

9M2 transducers "A" length
specify "B" length separately (min 8 cm and max 318 cm between "A" and "B")

0 1 3	Minimum 13 cm (5.1") – for metal transducers with NPT connections only
0 1 5	Mininimum 15 cm (5.9") – for all other connections
3 3 0	Maximum 330 cm (130")

[ ] 9 M [ ] [ ] [ ] [ ] [ ] [ ] [ ] [ ] **complete order code for Echotel® transducer**

X = product with a specific customer requirement

PRESSURE/TEMPERATURE RATINGS

Kynar® Transducer Ratings

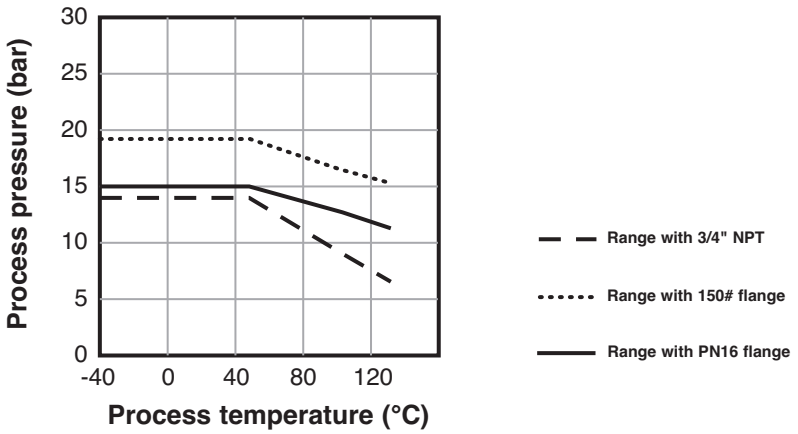

CPVC Transducer Ratings

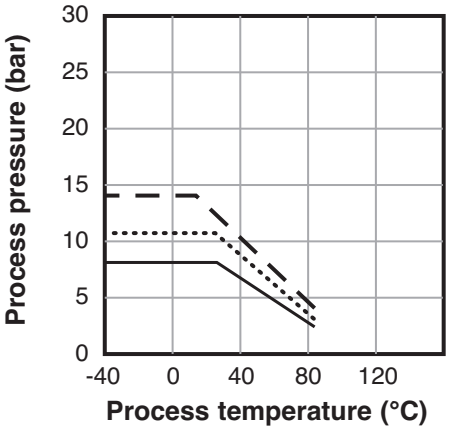

Metal Transducer Ratings

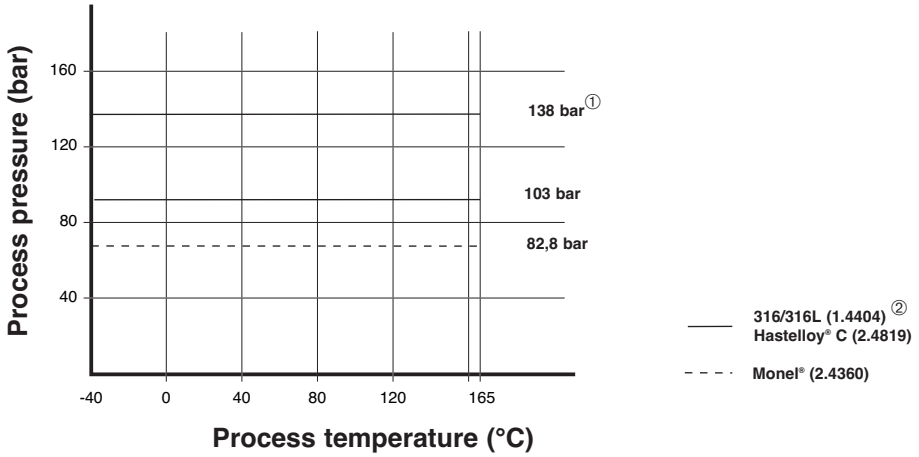

① Only applicable to NPT-connections with actuation length = 3 cm and all other connections with actuation length = 5 cm.
② For low temperature sensor: from -80 °C up to +120 °C.

ISO-9001:2008 REGISTERED FIRM
DNV Certification B.V., THE NETHERLANDS

QUALITY ASSURANCE - ISO 9001:2008

THE QUALITY ASSURANCE SYSTEM IN PLACE AT MAGNETROL® GUARANTEES THE HIGHEST LEVEL OF QUALITY DURING THE DESIGN, THE CONSTRUCTION AND THE SERVICE OF CONTROLS.
OUR QUALITY ASSURANCE SYSTEM IS APPROVED AND CERTIFIED TO **ISO 9001:2008** AND OUR TOTAL COMPANY IS COMMITTED TO PROVIDING FULL CUSTOMER SATISFACTION BOTH IN QUALITY PRODUCTS AND QUALITY SERVICE.

PRODUCT WARRANTY

ALL MAGNETROL® ELECTRONIC AND ULTRASONIC LEVEL CONTROLS ARE WARRANTED FREE OF DEFECTS IN MATERIALS AND WORKMANSHIP FOR ONE FULL YEAR FROM THE DATE OF ORIGINAL FACTORY SHIPMENT. IF RETURNED WITHIN THE WARRANTY PERIOD; AND, UPON FACTORY INSPECTION OF THE CONTROL, THE CAUSE OF THE CLAIM IS DETERMINED TO BE COVERED UNDER THE WARRANTY; THEN, MAGNETROL® INTERNATIONAL WILL REPAIR OR REPLACE THE CONTROL AT NO COST TO THE PURCHASER (OR OWNER) OTHER THAN TRANSPORTATION.
MAGNETROL® SHALL NOT BE LIABLE FOR MISAPPLICATION, LABOR CLAIMS, DIRECT OR CONSEQUENTIAL DAMAGE OR EXPENSE ARISING FROM THE INSTALLATION OR USE OF THE EQUIPMENT. THERE ARE NO OTHER WARRANTIES EXPRESSED OR IMPLIED, EXCEPT, SPECIAL WRITTEN WARRANTIES COVERING SOME MAGNETROL® PRODUCTS.

Magnetrol®

UNDER RESERVE OF MODIFICATIONS

BULLETIN N°: BE 51-137.6
EFFECTIVE: FEBRUARY 2013
SUPERSEDES: June 2012

BENELUX FRANCE	Heikensstraat 6, 9240 Zele, België -Belgique Tel. +32 (0)52.45.11.11 • Fax. +32 (0)52.45.09.93 • E-Mail: info@magnetrol.be
DEUTSCHLAND	Alte Ziegelei 2-4, D-51491 Overath Tel. +49 (0)2204 / 9536-0 • Fax. +49 (0)2204 / 9536-53 • E-Mail: vertrieb@magnetrol.de
INDIA	C-20 Community Centre, Janakpuri, New Delhi - 110 058 Tel. +91 (11) 41661840 • Fax +91 (11) 41661843 • E-Mail: info@magnetrolindia.com
ITALIA	Via Arese 12, I-20159 Milano Tel. +39 02 607.22.98 • Fax. +39 02 668.66.52 • E-Mail: mit.gen@magnetrol.it
RUSSIA	198095 Saint-Petersburg, Marshala Govorova street, house 35A, office 343 Tel. +7-812.702.70.87 • E-Mail: info@magnetrol.ru
U.A.E.	DAFZA Office 5EA 722 • PO Box 293671 • Dubai Tel. +971-4-6091735 • Fax +971-4-6091736 • E-Mail: info@magnetrol.ae
UNITED KINGDOM	Unit 1 Regent Business Centre, Jubilee Road Burgess Hill West Sussex RH 15 9TL Tel. +44 (0)1444 871313 • Fax +44 (0)1444 871317 • E-Mail: sales@magnetrol.co.uk

www.magnetrol.com

OUR NEAREST REPRESENTATIVE

ECHOTEL®
Model 961/962

Installation and Operating Manual



Model 961



Model 962

Ultrasonic

Single and

Dual Point

Level Switches

Magnetrol®

STI®

Read this Manual Before Installing

This manual provides information on the Echotel® Models 961 and 962 Ultrasonic Liquid Level Switches. It is important that all instructions are read carefully and followed in sequence. Detailed instructions are included in the Installation section of this manual.

Conventions Used in this Manual

Certain conventions are used in this manual to convey specific types of information. General technical material, support data, and safety information are presented in narrative form. The following styles are used for notes, cautions, and warnings.

Notes

Notes contain information that augments or clarifies an operating step. Notes do not normally contain actions. They follow the procedural steps to which they refer.

Cautions

Cautions alert the technician to special conditions that could injure personnel, damage equipment, or reduce a component's mechanical integrity. Cautions are also used to alert the technician to unsafe practices or the need for special protective equipment or specific materials. In this manual, a caution box indicates a potentially hazardous situation which, if not avoided, may result in minor or moderate injury.

Warnings

Warnings identify potentially dangerous situations or serious hazards. In this manual, a warning indicates an imminently hazardous situation which, if not avoided, could result in serious injury or death.

Safety Messages

Echotel Models 961 & 962 are designed for use in Category II, Pollution Degree 2 installations. Follow all standard industry procedures for servicing electrical and computer equipment when working with or around high voltage. Always shut off the power supply before touching any components.

Electrical components are sensitive to electrostatic discharge. To prevent equipment damage, observe safety procedures when working with electrostatic sensitive components.

This device complies with Part 15 of the FCC rules. Operation is subject to the following two conditions: (1) This device may not cause harmful interference, and (2) This device must accept any interference received, including interference that may cause undesired operation.

WARNING! Explosion hazard. Do not connect or disconnect equipment unless power has been switched off or the area is known to be non-hazardous.

Low Voltage Directive

For use in Category II installations. If equipment is used in a manner not specified by manufacturer, protection provided by equipment may be impaired.

Notice of Trademark, Copyright, and Limitations

Magnetrol & Magnetrol logotype, STI & STI logotype, and Echotel are registered tradenames of Magnetrol International, Incorporated.

Copyright © 2007 Magnetrol International, Incorporated. All rights reserved.

Performance specifications are effective with date of issue and are subject to change without notice. Magnetrol reserves the right to make changes to the product described in this manual at any time without notice. Magnetrol makes no warranty with respect to the accuracy of the information in this manual.

Warranty

All Magnetrol/STI electronic level and flow products are warranted free of defects in materials or workmanship for one full year from the date of original factory shipment.

If returned within the warranty period; and, upon factory inspection of the control, the cause of the claim is determined to be covered under the warranty; then, Magnetrol/STI will repair or replace the control at no cost to the purchaser (or owner) other than transportation.

Magnetrol/STI shall not be liable for misapplication, labor claims, direct or consequential damage or expense arising from the installation or use of equipment. There are no other warranties expressed or implied, except special written warranties covering some Magnetrol/STI products.

Quality Assurance

The quality assurance system in place at Magnetrol/STI guarantees the highest level of quality throughout the company. Magnetrol/STI is committed to providing full customer satisfaction both in quality products and quality service.

Magnetrol's quality assurance system is registered to ISO 9001 affirming its commitment to known international quality standards providing the strongest assurance of product/service quality available.

Echotel Model 961 & 962 Ultrasonic Single and Dual Point Liquid Level Switches

Table of Contents

1.0 Introduction 1
1.1 Principle of Operation 1
2.0 Installation 1
2.1 Unpacking 1
2.2 ESD Handling Procedure 2
2.3 Mounting 2
2.4 Wiring 3
2.4.1 Model 961 Line-powered Wiring 3
2.4.1.1 Model 961 Remote Transducer Housing Wiring 4
2.4.2 Model 961 Loop-powered Wiring 4
2.4.2.1 Model 961 Remote Transducer Housing Wiring 4
2.4.3 Model 962 Line-powered Wiring 5
2.4.3.1 Model 962 Remote Transducer Housing Wiring 5
2.4.4 Model 962 Loop-powered Wiring 6
2.4.4.1 Model 962 Remote Transducer Housing Wiring 6
2.5 Configuration 6
2.5.1 Model 961 Line-powered Configuration 6
2.5.1.1 Time Delay Potentiometer 7
2.5.1.2 Level Test Pushbutton 7
2.5.1.3 Malfunction Test Pushbutton 7
2.5.1.4 High/Low DIP Switch 7
2.5.1.5 Independent/Joint DIP Switch 8
2.5.2 Model 961 Loop-powered Configuration 8
2.5.2.1 Time Delay Potentiometer 8
2.5.2.2 Loop Test Pushbutton 8
2.5.2.3 Fault Test Pushbutton 8
2.5.2.4 High/Low DIP Switch 9
2.5.2.5 22/5 DIP Switch 9
2.5.3 Model 962 Line-powered Configuration 9
2.5.3.1 Time Delay Potentiometer 9
2.5.3.2 Level Test Pushbutton 9
2.5.3.3 Malfunction Test Pushbutton 10
2.5.3.4 High/Low DIP Switch 10
2.5.3.5 PC/LC DIP Switch 10
2.5.3.6 PC/LC Hi/Lo DIP Switch Configuration 11
2.5.4 Model 962 Loop-powered Configuration 12
2.5.4.1 Time Delay Potentiometer 12
2.5.4.2 Loop Test Pushbutton 12
2.5.4.3 Fault Test Pushbutton 12
2.5.4.4 High/Low DIP Switch 13
2.5.4.5 22/5 DIP Switch 13
3.0 Reference Information 14
3.1 Electronics Specifications 14
3.1.1 Model 961/962 with Relay Output 14
3.1.2 Model 961/962 with Current Shift Output . 14
3.2 Transducer Specifications 14
3.2.1 Model 9A1/9M1 Single Point 14
3.2.2 Model 9A2/9M2 Dual Point 14
3.3 Performance Specifications 15
3.4 Physical Specifications 15
3.5 Dimensional Specifications 15
3.6 Agency Approvals 17
3.6.1 Agency (FM/CSA) Drawing and Entity Parameters 18
3.7 Troubleshooting 19
3.8 Replacement Parts 21
3.9 Model Numbers 22
3.9.1 Model 961/962 Electronics 22
3.9.2 Connecting Cable 22
3.9.3 Model 961 Single Point Transducer 23
3.9.4 Model 962 Dual Point Transducer 24

1.0 Introduction

Echotel Model 961 and 962 ultrasonic level switches utilize pulsed signal technology to detect high, low, or dual point level in a broad range of liquid media applications.

Model 961 is a single point level switch. Model 962 is a dual point switch used as a level controller or to control pumps in an auto-fill or auto-empty mode.

1.1 Principle of Operation

Model 961/962 switches utilize ultrasonic energy to detect the presence or absence of liquid in a single or dual point transducer. Ultrasonic contact level technology uses high-frequency sound waves that are easily transmitted across a transducer gap (see Figure 1) in the presence of a liquid media, but are attenuated when the gap is dry. Model 961/962 switches use an ultrasonic frequency of 2 MHz to perform this liquid level measurement in a wide variety of process media and application conditions.

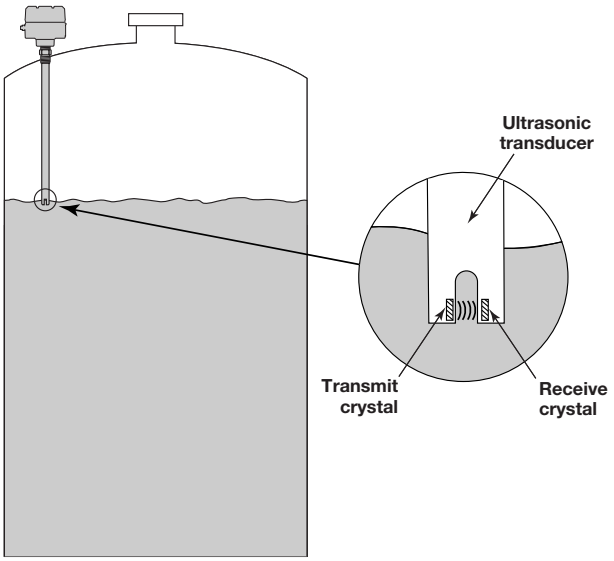

Ultrasonic signal transmission across transducer gap

Figure 1

The transducer uses a pair of piezoelectric crystals that are encapsulated in epoxy at the tip of the transducer. The crystals are made of a ceramic material that vibrates at a given frequency when subjected to an applied voltage. The transmit crystal converts the applied voltage from the electronics into an ultrasonic signal. When liquid is present in the gap, the receive crystal senses the ultrasonic signal from the transmit crystal and converts it back to an electrical signal. This signal is sent to the electronics to indicate the presence of liquid in the transducer gap. When there is no liquid present, the ultrasonic signal is attenuated and is not detected by the receive crystal.

2.0 Installation

2.1 Unpacking

Unpack the instrument carefully. Inspect all units for damage. Report any concealed damage to carrier within 24 hours. Check the contents of the packing slip and purchase order. Check and record the serial number for future reference when ordering parts.

serial number

2.2 Electrostatic Discharge (ESD) Handling Procedure

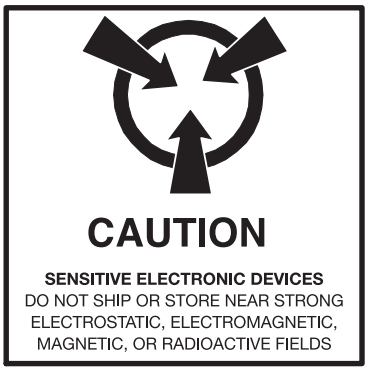

Magnetrol's electronic instruments are manufactured to the highest quality standards. These instruments use electronic components that may be damaged by static electricity present in most work environments.

The following steps are recommended to reduce the risk of component failure due to electrostatic discharge.

- Ship and store circuit boards in anti-static bags. If an anti-static bag is not available, wrap the board in aluminum foil. Do not place boards on foam packing materials.
- Use a grounding wrist strap when installing and removing circuit boards. A grounded workstation is recommended.
- Handle circuit boards only by the edges. Do not touch components or connector pins.
- Make sure that all electrical connections are completely made and none are partial or floating. Ground all equipment to a good, earth ground.

2.3 Mounting

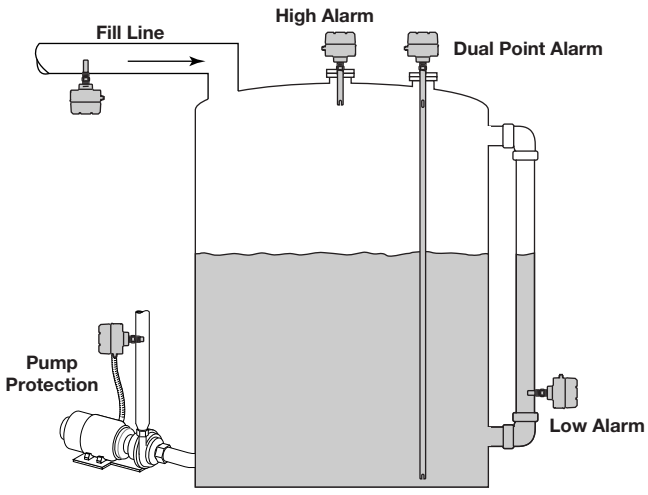

Figure 2
Typical Mounting Orientations

The Model 961 level switch may be mounted in a variety of positions as shown in Figures 2 through 5. Model 962 is always mounted vertically.

Proper orientation of the transducer gap will facilitate maximum performance in difficult applications. When the Model 961 is mounted horizontally, the transducer gap must be turned vertical to allow proper drainage of liquid out of the gap. The wrench flats on the mounting nut are aligned with the transducer gap; therefore, proper transducer mounting can be achieved by aligning the mounting nut flats in a vertical orientation. See Figure 4.

When installing a Model 961 switch in a nozzle or pipe, the transducer gap must extend into the tank at least one inch beyond the inside tank wall. Refer to Figure 5.

Screw transducer into the opening using a wrench on the transducer mounting nut flats. If flanged, bolt unit to mating flange with proper gasket. Use thread tape or suitable pipe compound on the threads. Do not over-tighten.

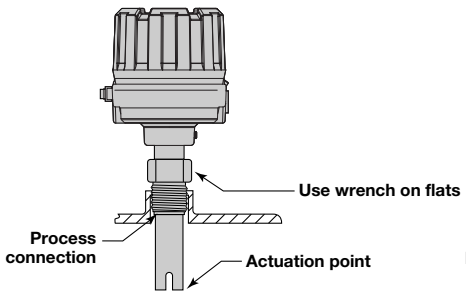

Figure 3
Vertical Mounting

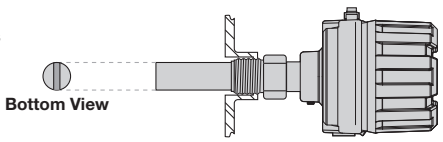

Figure 4
Horizontal Mounting

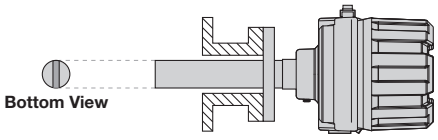

Figure 5
Nozzle Mounting

2.4 Wiring

Wiring for Model 961/962 level switches is different for all four versions. These switches are available as 4-wire, line-powered units with a relay, or as 2-wire loop-powered units with mA current shift output. Determine which version you have from the table below and proceed to the proper wiring section.

Model	Input	Output	Wiring Information
961	Line-powered	5 amp relays	***Proceed to section 2.4.1***
961	Loop-powered	Current shift	***Proceed to section 2.4.2***
962	Line-powered	5 amp relays	***Proceed to section 2.4.3***
962	Loop-powered	Current shift	***Proceed to section 2.4.4***

2.4.1 Model 961 Line-powered Wiring

Power and relay wiring connections are suitable for 12–24 AWG wire.

Caution: OBSERVE ALL APPLICABLE ELECTRICAL CODES AND PROPER WIRING PROCEDURES.

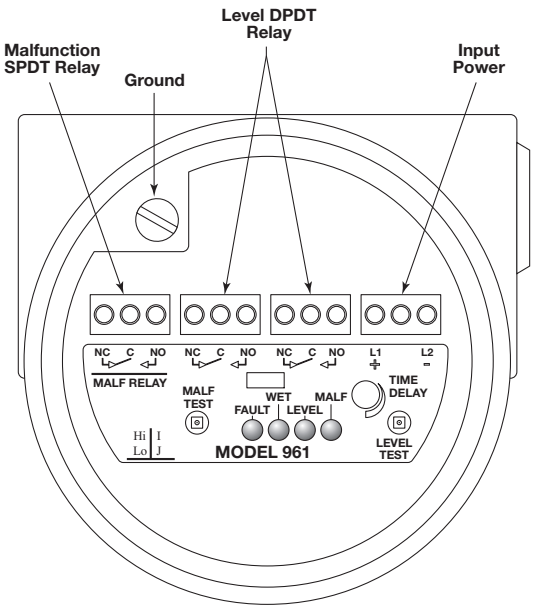

Figure 6
Model 961 Line Power Wiring

1. Make sure the power source is turned off.
2. Unscrew and remove housing cover.
3. Pull power supply and relay wires through the conduit connection.
4. Refer to Figure 6. Connect power leads to proper terminals. Model 961 is available for AC power (102 to 265 VAC) or for DC power (18–32 VDC)

a. AC Power – Connect "hot" wire to terminal marked L1 and the "neutral" wire to the terminal marked L2. The green head screw should be used for grounding.

b. DC Power – Connect wires to terminals (+) and (-) on the terminal block. The green head screw should be used for grounding.

5. Connect desired relay wiring as shown in Figure 6.
6. Prevent moisture seepage into housing by installing an approved seal drain fitting in the conduit run leading to the unit.
7. Wiring is complete. Replace housing cover.

Caution: In hazardous areas, do not power the unit until the conduit is sealed and enclosure cover is screwed down securely.

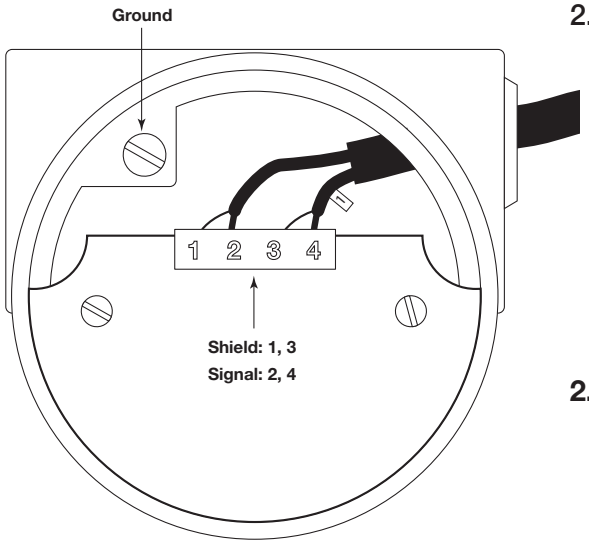

Figure 7
Model 961 Remote Transducer Wiring

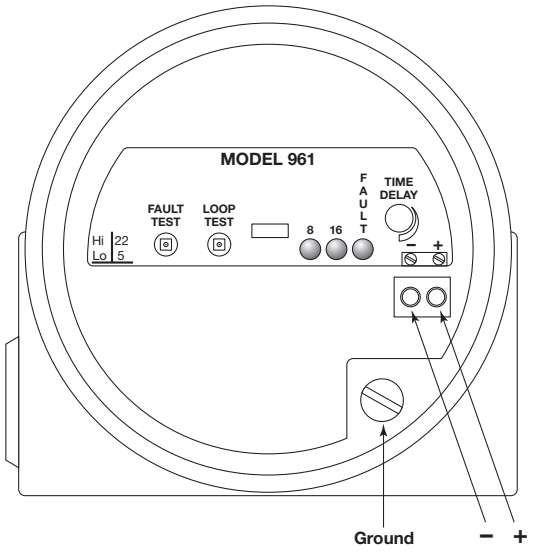

Figure 8
Model 961 Loop Power Wiring

2.4.1.1 Model 961 Remote Transducer Housing Wiring

Remote mount Model 961 units have a "1" in the 8th digit (961-XXXX-1XX) of the model number. The 037-3316-XXX cabling is pre-connected at the factory on the electronics end. The remote transducer housing has terminal blocks labeled as TB1, TB2, and TB3. Wiring from the transducer is pre-connected at TB1. Connect the 037-3316-XXX wires to TB2 and TB3 as shown in Figure 7.

2.4.2 Model 961 Loop-powered Wiring

For intrinsically safe installations, refer to the Agency Drawing in Section 3.6.1. Loop wiring connections are suitable for 12–24 AWG wire.

Caution: OBSERVE ALL APPLICABLE ELECTRICAL CODES AND PROPER WIRING PROCEDURES.

1. Make sure the power source is turned off.
2. Unscrew and remove housing cover.
3. Pull twisted pair wire through the conduit connection.
4. Refer to Figure 8. Connect wires to terminals (+) and (-) on the terminal block. Unshielded cable may be used. If shielded cable is used, attach shield to green head screw.
5. Prevent moisture seepage into housing by installing an approved seal drain fitting in the conduit run leading to the unit.
6. Wiring is complete. Replace housing cover.

Caution: In hazardous areas, do not power the unit until the conduit is sealed and enclosure cover is screwed down securely.

2.4.2.1 Model 961 Remote Transducer Housing Wiring

Remote mount Model 961 units have a "1" in the 8th digit (961-XXXX-1XX) of the model number. The 037-3316-XXX cabling is pre-connected at the factory on the electronics end. The remote transducer housing has terminal blocks labeled as TB1, TB2, and TB3. Wiring from the transducer is pre-connected at TB1. Connect the 037-3316-XXX wires to TB2 and TB3 as shown in Figure 7.

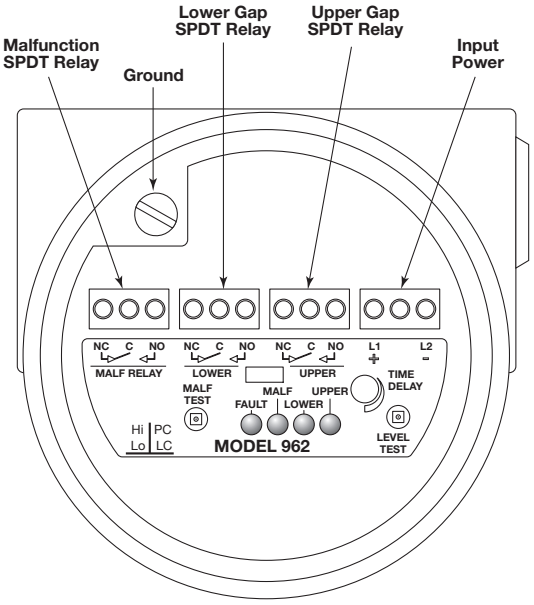

Figure 9

Model 962 Line Power Wiring

2.4.3 Model 962 Line-powered Wiring

Power and relay wiring connections are suitable for 12–24 AWG wire.

Caution: OBSERVE ALL APPLICABLE ELECTRICAL CODES AND PROPER WIRING PROCEDURES.

1. Make sure the power source is turned off.
2. Unscrew and remove housing cover.
3. Pull power supply and relay wires through the conduit connection.
4. Refer to Figure 9. Connect power leads to proper terminals. Model 962 is available for AC power (102 to 265 VAC) or for DC power (18–32 VDC)

a. AC Power – Connect "hot" wire to terminal marked L1 and the "neutral" wire to the terminal marked L2. The green head screw should be used for grounding.

b. DC Power – Connect wires to terminals (+) and (-) on the terminal block. The green head screw should be used for grounding.

5. Connect desired relay wiring as shown in Figure 9.
6. Prevent moisture seepage into housing by installing an approved seal drain fitting in the conduit run leading to the unit.
7. Wiring is complete. Replace housing cover.

Caution: In hazardous areas, do not power the unit until the conduit is sealed and enclosure cover is screwed down securely.

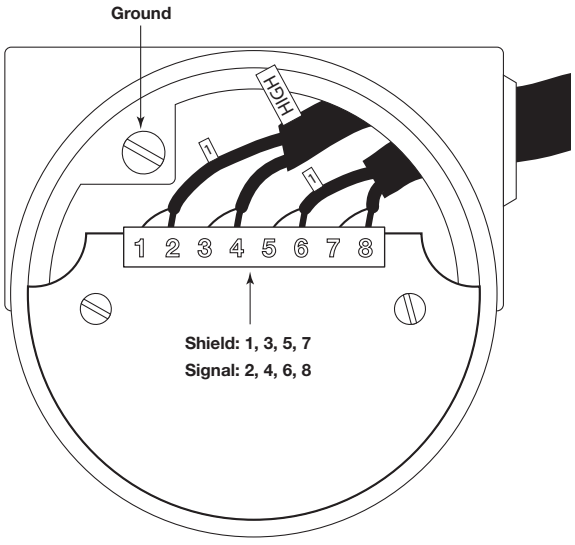

Figure 10

Model 962 Remote Transducer Wiring

2.4.3.1 Model 962 Remote Transducer Housing Wiring

Remote mount Model 962 units have a "1" in the 8th digit (962-XXXX-1XX) of the model number. The 037-3316-XXX cabling is pre-connected at the factory on the electronics end. The remote transducer housing has terminal blocks labeled as TB1, TB2, TB3, TB4 and TB5. Wiring from the transducer is pre-connected at TB1. Connect the 037-3316-XXX wires to TB2, TB3, TB4 and TB5 as shown in Figure 10.

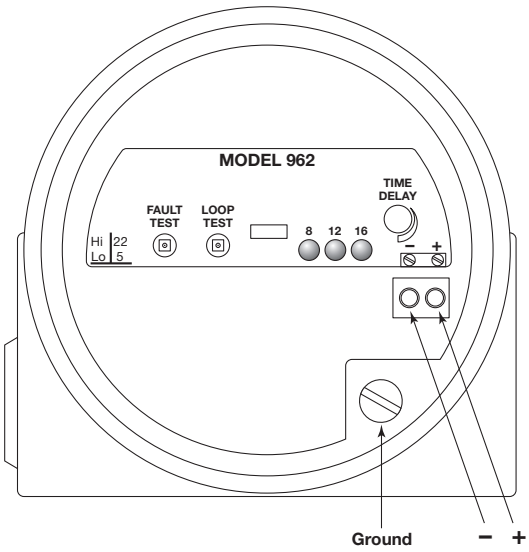

Figure 11
Model 962 Loop Power Wiring

2.4.4 Model 962 Loop-powered Wiring

For intrinsically safe installations, refer to the Agency Drawing in Section 3.6.1. Loop wiring connections are suitable for 12–24 AWG wire.

Caution: OBSERVE ALL APPLICABLE ELECTRICAL CODES AND PROPER WIRING PROCEDURES.

1. Make sure the power source is turned off.
2. Unscrew and remove housing cover.
3. Pull twisted pair wire through the conduit connection.
4. Refer to Figure 11. Connect wires to terminals (+) and (-) on the terminal block. Unshielded cable may be used. If shielded cable is used, attach shield to green head screw.
5. Prevent moisture seepage into housing by installing an approved seal drain fitting in the conduit run leading to the unit.
6. Wiring is complete. Replace housing cover.

Caution: In hazardous areas, do not power the unit until the conduit is sealed and enclosure cover is screwed down securely.

2.4.4.1 Model 962 Remote Transducer Housing Wiring

Remote mount Model 962 units have a "1" in the 8th digit (962-XXXX-1XX) of the model number. The 037-3316-XXX cabling is pre-connected at the factory on the electronics end. The remote transducer housing has terminal blocks labeled as TB1, TB2, TB3, TB4 and TB5. Wiring from the transducer is pre-connected at TB1. Connect the 037-3316-XXX wires to TB2, TB3, TB4 and TB5 as shown in Figure 10.

2.5 Configuration

2.5.1 Model 961 Line-powered Configuration

Model 961 line-powered units have the following configuration options:

- TIME DELAY potentiometer for 0.5 to 45 second signal averaging
- LEVEL TEST pushbutton for testing of the DPDT process level alarm
- MALF TEST pushbutton for testing of the SPDT malfunction alarm
- Hi/Lo DIP switch for fail-safe high or low level selection
- I/J DIP switch for independent or joint operation of the relays

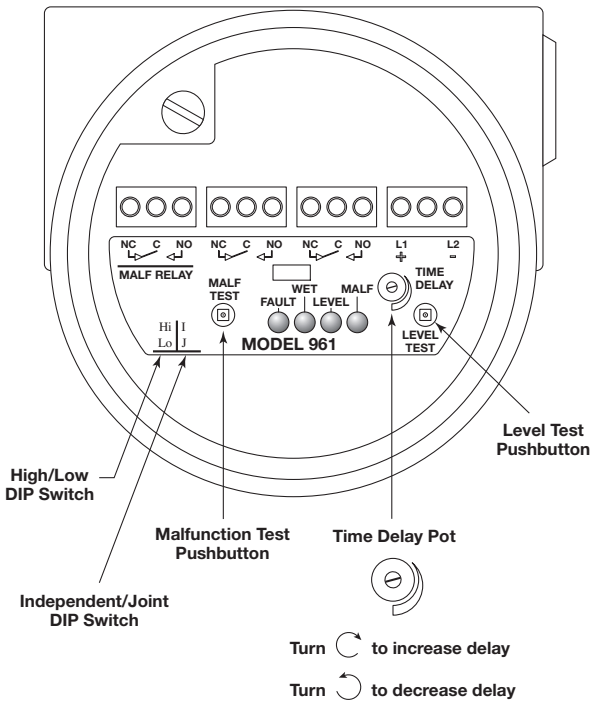

Figure 12
Model 961 Line Power Configuration

Fault and Malfunction LED Indication

Operating Condition	Red Fault LED	Green Malfunction LED
Normal	Dark	Lit
Fault	Lit	Dark

High/Low DIP Switch Configuration
(Model 961 Line-powered)

Hi/Lo DIP	Gap Condition	WET LED	LEVEL LED
Hi	Dry	Dark	Lit
Hi	Wet	Lit	Dark
Lo	Dry	Dark	Dark
Lo	Wet	Lit	Lit

2.5.1.1 Time Delay Potentiometer

The time delay potentiometer is typically used in applications where turbulence or splashing may cause false level alarms. This is a 25-turn pot with a factory default setting of 0.5 seconds. If desired, this pot may be turned clockwise to increase the response time from the standard 0.5 seconds to a maximum of 45 seconds. Turning the pot counter-clockwise decreases the time delay.

The WET LED is not influenced by the time delay pot. As an example, turning the pot clockwise several turns will put a time delay into the 961. Immersing the tip of the transducer in water with the Hi/Lo switch in the Hi position, will produce the following results:

- WET LED will immediately be lit
- After the time delay the LEVEL LED will go dark and the DPDT process level relay will de-energize

When removing the tip of the transducer from the water the WET LED will immediately go dark. After the time delay the LEVEL LED will light and DPDT process level relay will energize.

2.5.1.2 Level Test Pushbutton

The level test pushbutton is used to manually test the DPDT process level relay. Pressing this pushbutton reverses the state of the DPDT relay, from energized to de-energized or vice-versa. This can be used to manually test the relay, and whatever is connected to this relay. The time delay pot does not affect the operation of the level test pushbutton.

2.5.1.3 Malfunction Test Pushbutton

The malfunction test pushbutton is used to manually test the SPDT malfunction relay. Pressing and holding this pushbutton for 2 seconds will cause the SPDT relay to de-energize indicating a fault condition. This can be used to manually test the relay, and whatever is connected to this relay. The time delay pot does not affect the operation of the malfunction pushbutton.

NOTE: Under normal operating conditions the red fault LED is dark and the green malfunction LED is lit, indicating that the malfunction relay is energized. Should a fault condition occur, the red fault LED is lit and the green malfunction LED is dark, indicating that the malfunction relay is de-energized.

2.5.1.4 High/Low DIP Switch

The Hi/Lo DIP switch selects whether the 961 will be used as high level fail-safe switch or low level fail-safe switch. The table assists in configuring the Hi/Lo DIP switch.

2.5.1.5 Independent/Joint DIP Switch

The I/J DIP switch is used to configure whether the SPDT malfunction relay acts independently or jointly with the DPDT process level relay. The factory default is for this switch to be in the "I" position, where the relays act totally independent of each other. If this DIP switch is in the "J" position, both the SPDT malfunction relay and the DPDT process relay will de-energize when a fault is detected.

2.5.2 Model 961 Loop-powered Configuration

Model 961 loop-powered units have the following configuration options:

- TIME DELAY potentiometer for 0.5 to 45 second signal averaging
- LOOP TEST pushbutton for testing the 8/16 mA loop output
- FAULT TEST pushbutton for testing the 5 or 22 mA fault output
- Hi/Lo DIP switch for fail-safe high or low level selection
- 22/5 DIP switch to select the fault mA current output

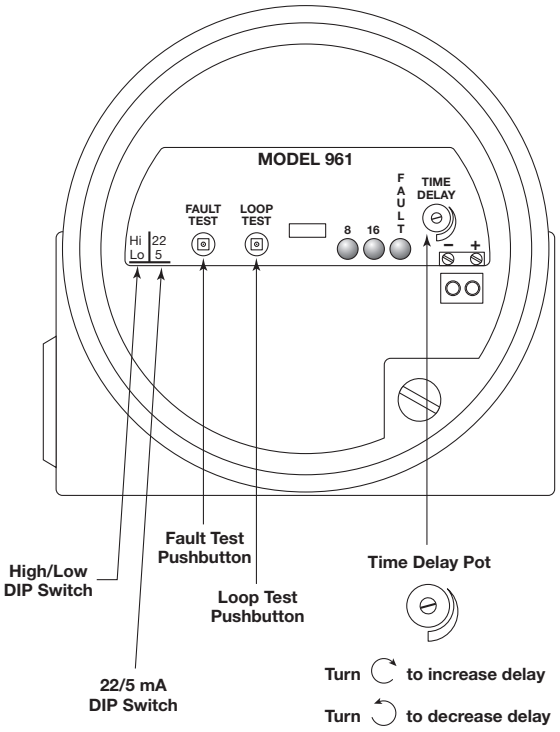

Figure 13
Model 961 Loop Power Configuration

2.5.2.1 Time Delay Potentiometer

The time delay potentiometer is typically used in applications where turbulence or splashing may cause false level alarms. This is a 25-turn pot with a factory default setting of 0.5 seconds. If desired, this pot may be turned clockwise to increase the response time from the standard 0.5 seconds to a maximum of 45 seconds. Turning the pot counterclockwise decreases the time delay.

2.5.2.2 Loop Test Pushbutton

The loop test pushbutton is used to manually test the loop current output. Pressing the LOOP TEST pushbutton reverses the output from 8 mA to 16 mA or from 16 mA to 8 mA. This can be used to manually test the loop output and whatever is connected to the 961. The time delay pot does not affect the operation of the loop test pushbutton.

2.5.2.3 Fault Test Pushbutton

The FAULT TEST pushbutton is used to manually force the 961 to the mA value that is selected at the 22/5 DIP switch. Pressing this pushbutton for 2 seconds will simulate a circuit test failure. This causes the output to go to the selected fault current of either 22 or 5 mA, and the red FAULT LED will light. The time delay pot does not affect the operation of the malfunction pushbutton.

NOTE: Fault current will be greater than 21 mA, or less than 3.6 mA.

High/Low DIP Switch Configuration
(Model 961 Loop-powered)

Hi/Lo DIP	Gap Condition	8 mA LED	16 mA LED	Fault LED
Hi	Dry	Lit	Dark	Dark
Hi	Wet	Dark	Lit	Dark
Lo	Dry	Dark	Lit	Dark
Lo	Wet	Lit	Dark	Dark

2.5.2.4 High/Low DIP Switch

The Hi/Lo DIP switch is used to select whether the 961 will be used as high level fail-safe switch or low level fail-safe switch. Normal process level operation produces an 8 mA value, and 16 mA is produced when the unit is in a level alarm state. The table can be used to assist in configuring the Hi/Lo DIP switch.

2.5.2.5 22/5 DIP Switch

The 22/5 DIP switch is used to select whether the 961 will produce a 22 mA or a 5 mA output when the unit detects a fault condition.

NOTE: Fault current will be greater than 21 mA, or less than 3.6 mA.

2.5.3 Model 962 Line-powered Configuration

Model 962 line-powered units have the following configuration options:

- TIME DELAY potentiometer for 0.5 to 45 second signal averaging
- LEVEL TEST pushbutton for testing of the SPDT process level relays
- MALF TEST pushbutton for testing of the SPDT malfunction relay
- Hi/Lo DIP switch for fail-safe high or low level selection
- PC/LC DIP switch for level control or pump control operation

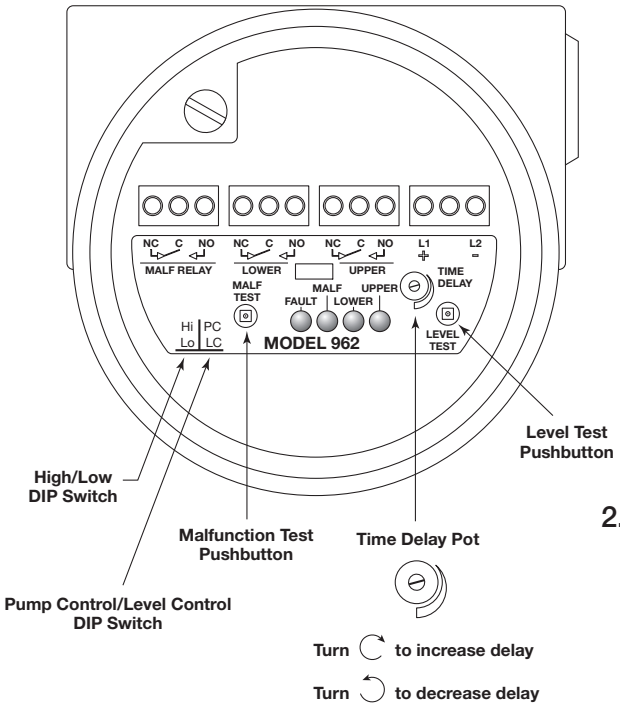

Figure 14
Model 962 Line Power Configuration

2.5.3.1 Time Delay Potentiometer

The time delay potentiometer is typically used in applications where turbulence or splashing may cause false level alarms. This is a 25-turn pot with a factory default setting of 0.5 seconds. If desired, this pot may be turned clockwise to increase the response time from the standard 0.5 seconds to a maximum of 45 seconds. Turning the pot counterclockwise decreases the time delay.

2.5.3.2 Level Test Pushbutton

The level test pushbutton is used to manually test both of the SPDT process level relays. Pressing this pushbutton reverses the state of both SPDT process level relays, from energized to de-energized or vice-versa. This can be used to manually test these relays, and whatever is connected to them. The time delay pot does not affect the operation of the level test pushbutton.

Fault and Malfunction LED Indication

Operating Condition	Red Fault LED	Green Malfunction LED
Normal	Dark	Lit
Fault	Lit	Dark

2.5.3.3 Malfunction Test Pushbutton

The malfunction test pushbutton is used to manually test the SPDT malfunction relay. Pressing and holding this pushbutton for 2 seconds will cause the SPDT relay to de-energize, indicating a fault condition. This can be used to manually test the relay, and whatever is connected to this relay. The time delay pot does not affect the operation of the malfunction pushbutton.

NOTE: Under normal operating conditions the red fault LED is dark and the green malfunction LED is lit, indicating that the malfunction relay is energized. Should a fault condition occur, the red fault LED is lit and the green malfunction LED is dark, indicating that the malfunction relay is de-energized.

2.5.3.4 High/Low DIP Switch

The Hi/Lo DIP switch is used to select whether the 962 will be used as high level fail-safe switch or low level fail-safe switch. The setting of the Hi/Lo DIP also affects how the PC/LC DIP switch configures the unit. Read Section 2.5.3.5 below and then proceed to the table in Section 2.5.3.6 for proper setting of these two DIP switches.

2.5.3.5 PC/LC DIP Switch

The PC/LC DIP switch is used to select whether the 962 will operate in a pump control or a level control mode. Select LC to use the 962 as a level controller where the relays operate independently of each other. Select PC to operate the 962 as a pump controller where the relays latch to enable an auto fill or auto empty mode.

The configuration tables on page 11 (Section 2.5.3.6) are used for proper setting of the Hi/Lo and PC/LC DIP switches, and also indicates the status of the yellow LOWER and UPPER LEDs. The green MALF (malfunction) LED and the red FAULT LEDs are purposely not included in this table.

2.5.3.6 PC/LC and Hi/Lo DIP Switch Configuration Tables

Fail-safe High Level Control Configuration

DIP Switches		Gap Condition		Lower Gap		Upper Gap	
PC/LC	Hi / Lo	Lower	Upper	Relay	LED	Relay	LED
LC	Hi	Dry	Dry	energized	On	energized	On
LC	Hi	Wet	Dry	de-energized	Off	energized	On
LC	Hi	Wet	Wet	de-energized	Off	de-energized	Off

Fail-safe Low Level Control Configuration

DIP Switches		Gap Condition		Lower Gap		Upper Gap	
PC/LC	Hi / Lo	Lower	Upper	Relay	LED	Relay	LED
LC	Lo	Dry	Dry	de-energized	Off	de-energized	Off
LC	Lo	Wet	Dry	energized	On	de-energized	Off
LC	Lo	Wet	Wet	energized	On	energized	On

Fail-safe High Pump Control Configuration (typical operating sequence)

DIP Switches		Gap Condition		Lower Gap		Upper Gap	
PC/LC	Hi / Lo	Lower	Upper	Relay	LED	Relay	LED
PC	Hi	Dry	Dry	energized	On	energized	On
PC	Hi	Wet	Dry	energized	On	energized	On
PC	Hi	Wet	Wet	de-energized	Off	de-energized	Off
PC	Hi	Wet	Dry	de-energized	Off	de-energized	Off
PC	Hi	Dry	Dry	energized	On	energized	On

Fail-safe Low Pump Control Configuration (typical operating sequence)

DIP Switches		Gap Condition		Lower Gap		Upper Gap	
PC/LC	Hi / Lo	Lower	Upper	Relay	LED	Relay	LED
PC	Lo	Dry	Dry	de-energized	Off	de-energized	Off
PC	Lo	Wet	Dry	de-energized	Off	de-energized	Off
PC	Lo	Wet	Wet	energized	On	energized	On
PC	Lo	Wet	Dry	energized	On	energized	On
PC	Lo	Dry	Dry	de-energized	Off	de-energized	Off

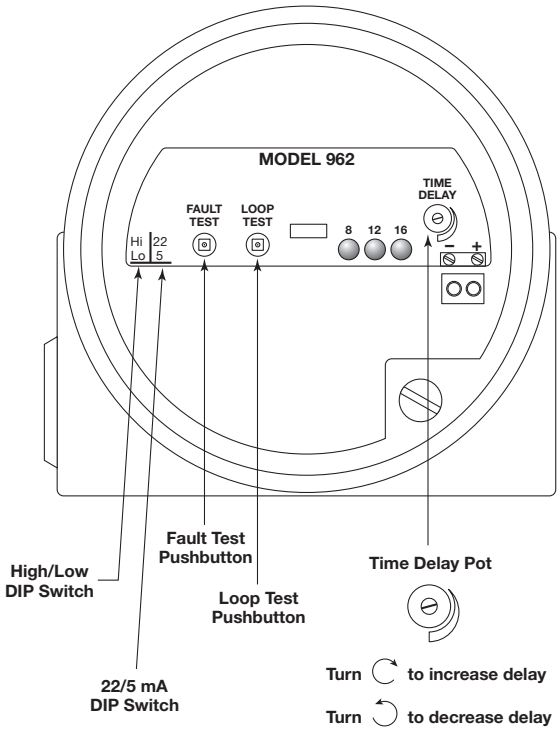

Figure 15
Model 962 Loop Power Configuration

2.5.4 Model 962 Loop-powered Configuration

Model 962 loop-powered units have the following configuration options:

- TIME DELAY potentiometer for 0.5 to 45 second signal averaging
- LOOP TEST pushbutton for testing the 8/12/16 mA loop output
- FAULT TEST pushbutton for testing the 5 or 22 mA fault output
- Hi/Lo DIP switch for fail-safe high or low level selection
- 22/5 DIP switch to select the fault mA current output

2.5.4.1 Time Delay Potentiometer

The time delay potentiometer is typically used in applications where turbulence or splashing may cause false level alarms. This is a 25-turn pot with a factory default setting of 0.5 seconds. If desired, this pot may be turned clockwise to increase the response time from the standard 0.5 seconds to a maximum of 45 seconds. Turning the pot counterclockwise decreases the time delay.

2.5.4.2 Loop Test Pushbutton

The loop test pushbutton is used to manually test the loop current output. Pressing the LOOP TEST pushbutton will force the output from 8 mA to 12 mA, 12 mA to 16 mA, or 16 mA to 8 mA. This can be used to manually test the loop output and whatever is connected to the 962. The time delay pot does not affect the operation of the loop test pushbutton.

2.5.4.3 Fault Test Pushbutton

The FAULT TEST pushbutton is used to manually force the 962 to the mA value that is selected at the 22/5 DIP switch. Pressing this pushbutton for 2 seconds will simulate a circuit test failure. This causes the output to go to the selected fault current of either 22 or 5 mA, and all 3 LEDs will go dark. The time delay pot does not affect the operation of the malfunction pushbutton.

NOTE: Fault current will be greater than 21 mA, or less than 3.6 mA.

2.5.4.4 High/Low DIP Switch

The Hi/Lo DIP switch is used to select whether the 962 will be used as high level fail-safe switch or low level fail-safe switch. Normal process level operation produces an 8 mA value, and 16 mA is produced when the unit is in a level alarm state. The table below can be used to assist in configuring the Hi/Lo DIP switch:

High/Low DIP Switch Configuration
(Model 962 Loop-powered)

Hi/Lo DIP	Lower Gap	Upper Gap	8 mA LED	12 mA LED	16 mA LED
Hi	Dry	Dry	Lit	Dark	Dark
Hi	Wet	Dry	Dark	Lit	Dark
Hi	Wet	Wet	Dark	Dark	Lit
Lo	Dry	Dry	Dark	Dark	Lit
Lo	Wet	Dry	Dark	Lit	Dark
Lo	Wet	Wet	Lit	Dark	Dark

2.5.4.5 22/5 DIP Switch

The 22/5 DIP switch is used to select whether the 962 will produce a 22 mA or a 5 mA output when the unit detects a fault condition.

NOTE: Fault current will be greater than 21 mA or less than 3.6 mA.

3.0 Reference Information

3.1 Electronics Specifications

3.1.1 Model 961/962 with Relay Output

Supply Voltage		102 to 265 VAC, or 18 to 32 VDC
Relay Outputs	961:	One DPDT level relay and one SPDT malfunction relay
	962:	Two SPDT level relays and one SPDT malfunction relay
Relay Ratings	DPDT:	5 amps @ 120 VAC, 250 VAC, and 30 VDC, 0.15 amp @ 125 VDC
	SPDT:	5 amps @ 120 VAC, 250 VAC, and 30 VDC, 0.15 amp @ 125 VDC
Fail-safe		Selectable for high or low level
Power Consumption	961/962:	Less than 3 watts
Ambient Temperature		-40° to +160° F (-40° to +71° C)

3.1.2 Model 961/962 with Current Shift Output

Supply Voltage		11 to 35 VDC
Current Shift Output	Normal Operation:	8 mA
	Level Alarm Condition:	16 mA
	Malfunction:	3.6 mA or 22 mA selectable
Loop Resistance		104 ohms with 11 VDC input, 1100 ohms with 35 VDC input
Fail-safe		Selectable for high or low level
Power Consumption	961/962	Less than 1 watt
Ambient Temperature		-40° to +160° F (-40° to +71° C)

3.2 Transducer Specifications

3.2.1 Model 9A1/9M1 Single Point

Transducer Material	Material Code (see page 23)	Operating Temperature Range	Maximum Pressure	Actuation Length
316 Stainless Steel	A, S, N, K	-40° to +325° F (-40° to +163° C)	2000 psi (138 bar)	1" and 2" (3 and 5 cm)
316 Stainless Steel	A, S, N, K	-40° to +325° F (-40° to +163° C)	1500 psi (103 bar)	3" to 130" (6 to 330 cm)
Hastelloy C-276	B	-40° to +325° F (-40° to +163° C)	2000 psi (138 bar)	1" and 2" (3 and 5 cm)
Hastelloy C-276	B	-40° to +325° F (-40° to +163° C)	1500 psi (103 bar)	3" to 130" (6 to 330 cm)
Monel	C	-40° to +325° F (-40° to +163° C)	1200 psi (83 bar)	1" to 130" (3 to 330 cm)
Kynar®	R	-40° to +250° F (-40° to +121° C)	see graphs below	2" to 130" (5 to 330 cm)
CPVC	P	-40° to +180° F (-40° to +82° C)	see graphs below	2" to 130" (5 to 330 cm)

3.2.2 Model 9A2/9M2 Dual Point

Transducer Material	Material Code (see page 24)	Operating Temperature Range	Maximum Pressure	Actuation Length
316 Stainless Steel	A, K	-40° to +325° F (-40° to +163° C)	1500 psi (103 bar)	5" to 130" (13 to 330 cm)
CPVC	P	-40° to +180° F (-40° to +82° C)	see graphs below	5" to 130" (13 to 330 cm)

Kynar Transducer Ratings

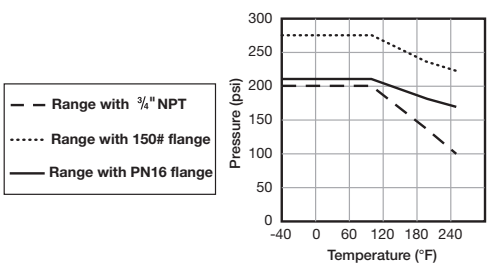

CPVC Transducer Ratings

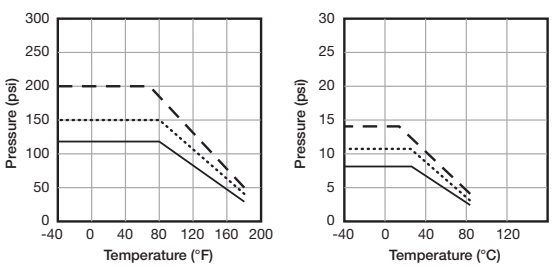

3.3 Performance Specifications

Repeatability		+/- 0.078" (2 mm)
Response Time		½ second typical
Time Delay		Variable 0.5 – 45 seconds on rising and falling levels
Self-Test	Automatic:	Continuously verifies operation of electronics, transducer, piezoelectric crystals, and electrical noise
	Manual:	Pushbutton verifies operation of electronics, transducer, and piezoelectric crystals
Shock Class		ANSI/ISA-S71.03 Class SA1
Vibration Class		ANSI/ISA-S71.03 Class VC2
Humidity		0 – 99%, non-condensing
Electromagnetic Compatibility		Meets CE requirements EN 61326

3.4 Physical Specifications

Housing Material		Cast aluminum A356-T6, or cast 316 stainless steel
Cable Entry		¾" NPT, or M20
Gross Weight	961/962 Electronics:	2.2 lbs. (1.0 kg)
	2" (5 cm) Transducer:	0.6 lbs. (0.3 kg)

3.5 Dimensional Specifications

Inches (mm)

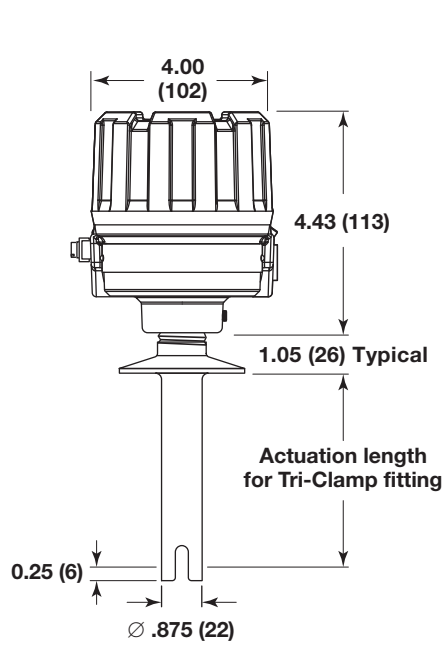

Model 961
with Tri-Clamp® 16 AMP Fitting

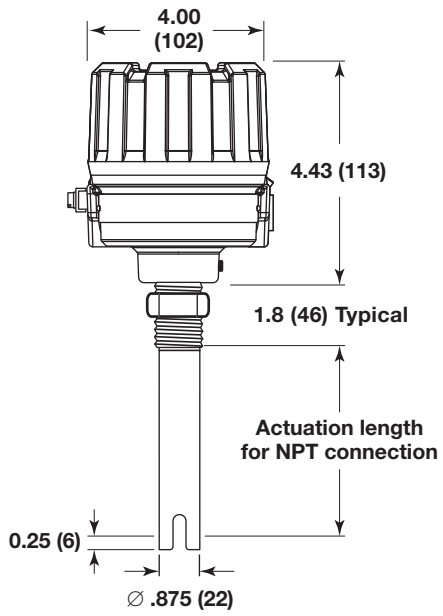

Model 961
with NPT Connection

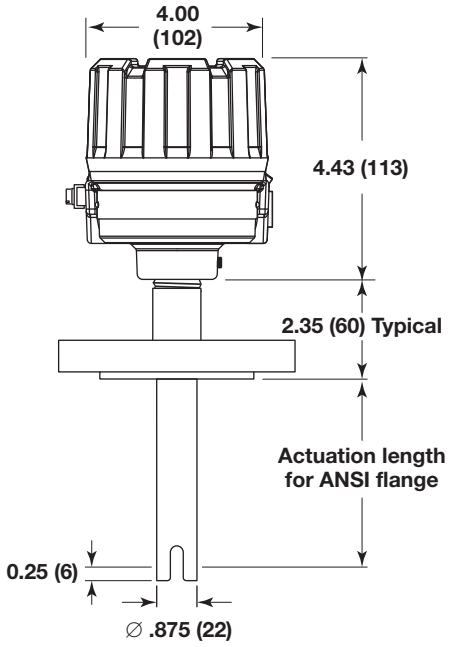

Model 961
with ANSI Flange

3.5 Dimensional Specifications

Inches (mm)

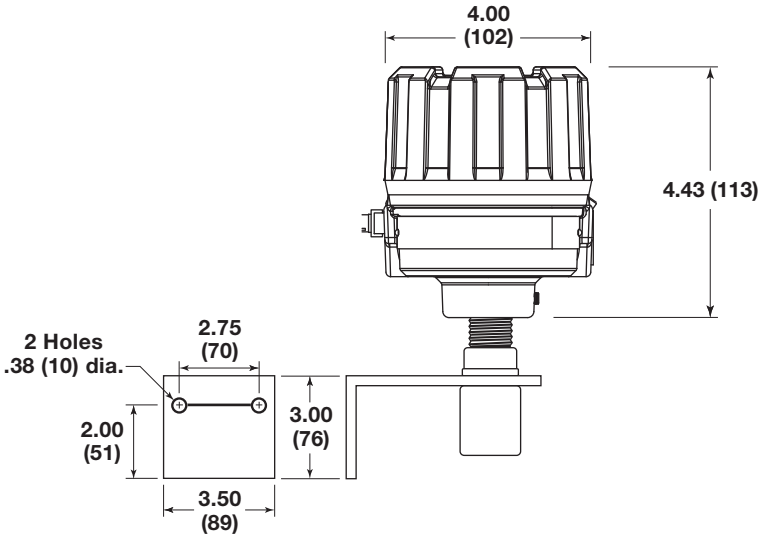

Model 961/962 with Remote Electronics

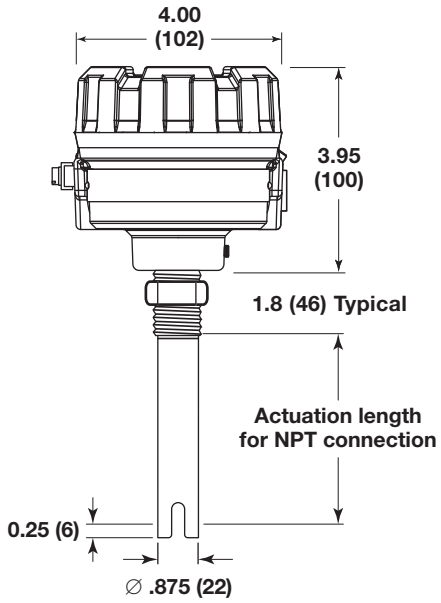

Remote Transducer
with NPT Connection

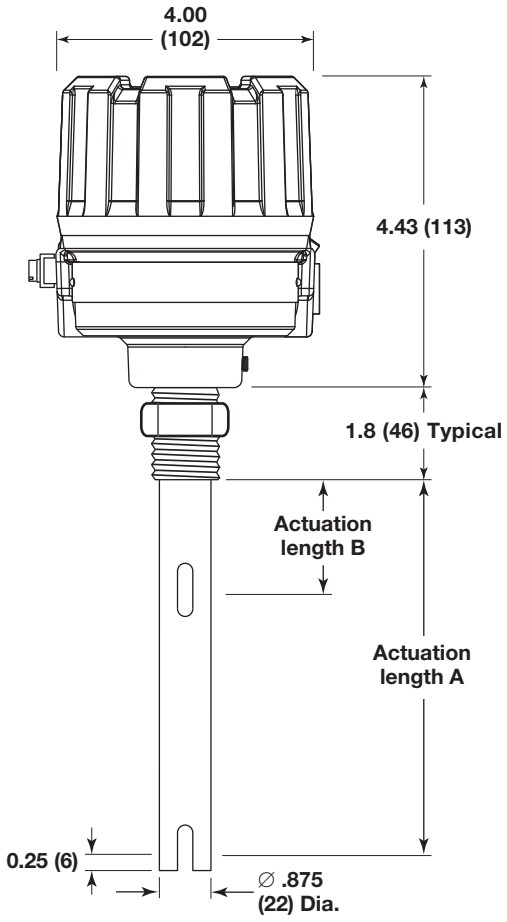

Model 962
with NPT Connection

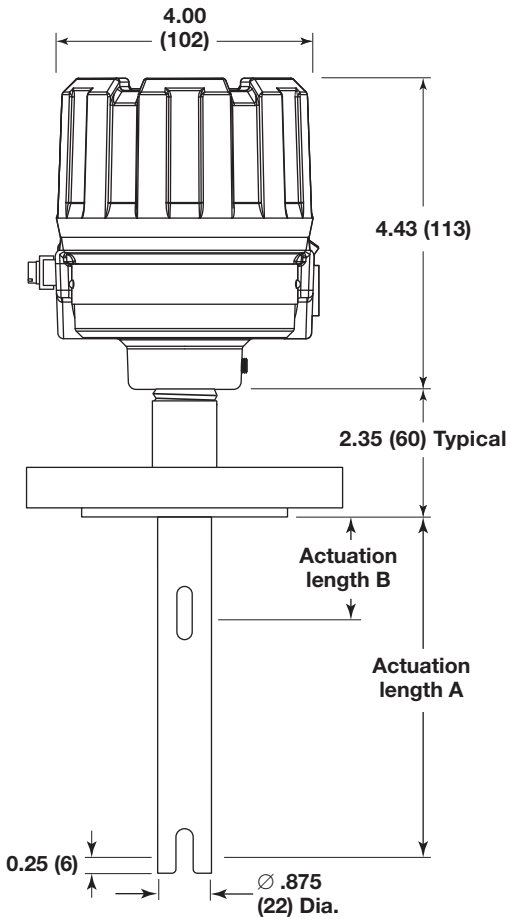

Model 962
with ANSI Flange

3.6 Agency Approvals

AGENCY	APPROVED MODELS	PROTECTION METHOD	AREA CLASSIFICATION
FM 	96X-2DA0-X3X or 96X-7DA0-X3X with transducers 9AX-XXXA-XXX or 9MX-XXXA-XXX	Explosion Proof	Class I, Div. 1,Groups B,C, & D Class II, Div. 1, Groups E,F, & G Class III, NEMA 4X, IP 66, T6
	96X-XDA0-XXX or 96X-XDA0-XXX with transducers 9AX-XXXA-XXX or 9MX-XXXA-XXX	Non-Incendive	Class I, Div. 2,Groups A,B,C, & D Class II, Div. 2, Groups E,F, & G Class III, NEMA 4X, IP 66, T4
	96X-50A0-X1X with transducers 9AX-XXXA-XXX or 9MX-XXXA-XXX	Intrinsically Safe	Class I, Div. 1,Groups A,B,C, & D Class II, Div. 1, Groups E,F, & G Class III, NEMA 4X, IP 66, T6
CSA 	96X-2DA0-X3X or 96X-7DA0-X3X with transducers 9AX-XXXA-XXX or 9MX-XXXA-XXX	Explosion Proof	Class I, Div. 1,Groups B,C, & D Class II, Div. 1, Groups E,F, & G Class III, NEMA 4X, IP 66, T6
	96X-XDA0-XXX or 96X-XDA0-XXX with transducers 9AX-XXXA-XXX or 9MX-XXXA-XXX	Non-Incendive	Class I, Div. 2,Groups A,B,C, & D Class II, Div. 2, Groups E,F, & G Class III, NEMA 4X, IP 66, T4
	96X-50A0-X1X with transducers 9AX-XXXA-XXX or 9MX-XXXA-XXX	Intrinsically Safe	Class I, Div. 1,Groups A,B,C, & D Class II, Div. 1, Groups E,F, & G Class III, NEMA 4X, IP 66, T6
ATEX 	96X-XXAO-XCX with transducers 9XX-AXXA-XXX 9XX-SXXA-XXX 9XX-BXXA-XXX 9XX-CXXA-XXX 9XX-NXXA-XXX 9XX-KXXA-XXX	Explosion Proof	Ex II 1/2 G, EEx d IIC T6
	96X-50A0-XAX with transducers 9XX-AXXA-XXX 9XX-SXXA-XXX 9XX-BXXA-XXX 9XX-CXXA-XXX 9XX-NXXA-XXX 9XX-KXXA-XXX	Intrinsically Safe	Ex II 1 G, EEx ia IIC T5

CE These units have been tested to EN 61326 and are in compliance with the EMC Directive 89/336/EEC.

REVISIONS			
SYM	DESCRIPTION	BY & DATE	CHANGE NO.
A	RELEASED	RC 11-03-05	3188-487

HAZARDOUS LOCATIONS

MODEL 961 / 962 Level Switches
Intrinsically Safe for
CL I, Div. 1, Groups *A B C* D
CL II, Div. 1, Groups E F G
CL III, TYPE 4X / IP66

ENTITY

Vmax = 30 V
Imax = 125 mA
Pmax = 1.0 W
Ci = 15.5 nF
Li = 8.58 µH

NON-HAZARDOUS LOCATIONS

Limiting Values

Voc <= 30.0V Ca >= 15.5 nF
Isc <= 125 mA La >= 8.58 µH

The voltage (Vmax) and current (Imax), which the transmitter can receive, must be equal to or greater than the maximum open circuit voltage (Voc or V+) and the maximum short circuit current (Isc or Ie) which can be delivered by the source device. In addition, the maximum capacitance (Ci) and inductance (Li) of the load and the capacitance and inductance of the interconnecting wiring must be equal to or less than the capacitance (Ca) or the inductance (La), which can be driven by the source device.

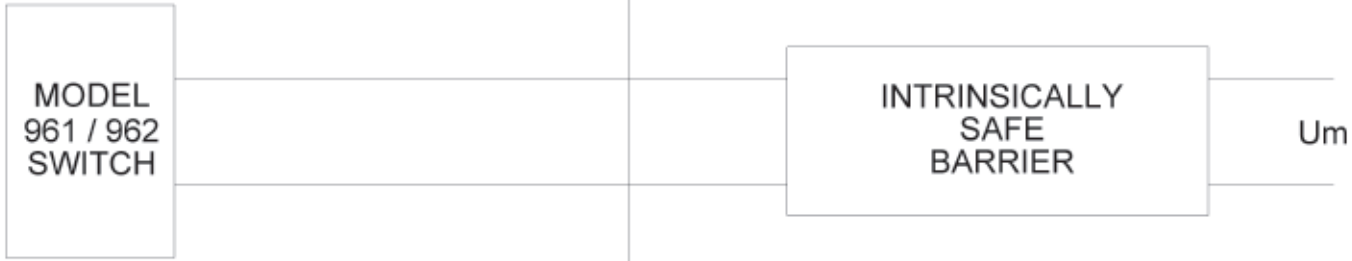

NOTES:

1) Manufacturers installation instructions supplied with the protective barrier. CEC (for CSA) or the NEC and ANSI/ISA RP 12.6 (for FM) must be followed when installing the equipment.
2) Control equipment connected to protective barriers must not use or generate more than 250 Vdc or Vrms.
3) No revisions to this drawing without FMRC and CSA approval.
4) For CSA: Exia Intrinsically Safe / Securite Intrinseque
5) For CSA: Warning – Explosion Hazard – Substitution of components may impair suitability for hazardous locations
   For CSA: Warning – Explosion Hazard – Do not disconnect equipment unless power has been switched off or the area is known to be non-hazardous.
6) For supply connections, use wire suitable for operating temperature. For 71°C ambient, use wire with a minimum temperature rating of 75°C
7) The device can also be installed in
   Class I, Div. 2 Groups A B C D;
   Class II Div. 2, Groups E F & G (F & G only for FMRC);
   Class III Hazardous Locations and does not require connection to a protective barrier when installed per the CEC (for CSA) or the NEC (for FM) and when connected to a power source not exceeding 30 V.

THIRD ANGLE PROJECTION
IN [mm]

THIS DRAWING IS THE EXCLUSIVE PROPERTY OF MAGNETROL INTERNATIONAL. NO USE WHATSOEVER OF THE INFORMATION CONTAINED HEREON, NOR REPRODUCTION IN WHOLE OR IN PART MAY BE MADE WITHOUT THE EXPRESS WRITTEN PERMISSION OF MAGNETROL INTERNATIONAL.

MATERIAL
RAW MATERIAL PART NO.
HEAT FINISH
FINISH

UNLESS OTHERWISE SPECIFIED:
DIMENSIONS ARE IN INCHES
[ ] OR mm DIMENSIONS ARE IN MILLIMETERS
REMOVE ALL BURRS AND SHARP EDGES
RMS ALLOWED .032 [0.81]
INSIDE RADII .032 [0.81]
ALL FINISHES 125 OR BETTER
TOLERANCES
2 PL DECIMAL ±0.010 IN. [0.4mm]
3 PL DECIMAL ±0.005 IN. [0.2mm]
ANGULAR ±2°

TITLE: MODEL 96X

DRAWN	R.CAMPBELL	DATE	11-03-05
CHECKED	T.HOFRICHTER	DATE	11-03-05
APPROVED	P.SNIDER	DATE	11-03-05
PROJECT NO.	3188-487	SKETCH NO.	

Magnetrol
5300 BELMONT ROAD, DOWNERS GROVE
ILLINOIS 60515, AREA CODE 630/969-4000

SCALE: 1:1 SHEET 1 OF 1
SIZE C 099-5065

3.7 Troubleshooting

Caution: In hazardous areas, do not remove the housing cover until power is disconnected and the atmosphere is determined to be safe.

The Model 961/962 has a unique diagnostics feature to assist in troubleshooting should a failure occur. A microprocessor in the electronics continuously monitors all self-test data. Should a fault occur, the microprocessor can determine whether the malfunction is due to the electronics, transducer, piezoelectric crystals, or the presence of environmental noise. A pushbutton and Fault LED is used to assist in troubleshooting the switch:

- One flash of the Fault LED indicates a problem with either the transducer, piezoelectric crystals, or the interconnection wiring
- Two flashes of the Fault LED indicates a problem with one of the electronics boards
- Three flashes of the Fault LED indicates excessive levels of environmental noise

The following shows the pushbuttons and LEDs used for each version of the 961/962 for diagnostic troubleshooting:

Electronics Version	Pushbutton	LED
961 with 5 amp relays	LEVEL TEST	FAULT
961 with current shift	LOOP TEST	FAULT
962 with 5 amp relays	LEVEL TEST	FAULT
962 with current shift	LOOP TEST	16 mA

If the above diagnostic LED flashes once when the pushbutton is pressed, the most common issue is the interconnection wiring between the electronics and the transducer. Check all wiring inside the housing to make sure that all wires are secure in their respective terminal blocks. Make sure that all the terminal block screws are fully tightened. If all wires are secure then contact the factory. A replacement transducer may be needed. See the Model Number section on pages 23 and 24 for proper replacement part numbers.

Two flashes of the LED indicates an issue with the electronics module. Contact the factory for a replacement electronics module. See Section 3.8 for spare electronics boards part numbers.

Environmental noise is the issue if the diagnostic LED flashes three times. Common sources of environmental noise are conducted electrical noise from a VFD (variable frequency drive), radiated electrical interference from a walkie-talkie or radio, or mechanical vibration from some nearby source. This noise could affect the 961/962 and other electrical instrumentation. Check to see if any of the above listed sources may be causing the interference and correct the issue to insure proper operation of the unit.

It is also possible that application related issues may be affecting the proper operation of the 961/962 unit. The table below assists in troubleshooting.

PROBLEM	ACTION
No signal with level change	Check wiring to make sure proper input voltage is supplied.
	Make sure liquid is filling the transducer gap.
	Check for dense foam on surface or dried product in the gap. Unit may not function properly if either condition exists.
No change in output between wet gap or dry gap	Check to see if transducer gap is plugged with solids.
	Check for dense foam in gap.
The switch is chattering	Check for proper input voltage supply.
	Check for turbulence. Relocate switch or isolate from turbulence.
	Check for excessive aeration.

3.8 Replacement Parts

Model 961/962 Common Parts

Item	Description	Part Number
1	Cast Aluminum Cover	004-9192-009
2	O-Ring	012-2201-237
3	Remote Transducer Housing Cover	004-9193-002
4	Bezel	See table below
5	Electronic Boards	See table below
6	Transducer	See Model Number

Model 961 Single Point Electronics

Input Power	Bezel	Power Board	Logic Board
DC line	003-1230-002	030-3592-002	030-3591-001
AC line	003-1230-002	030-3592-001	030-3591-001
DC loop	003-1230-003	030-3590-001	None

Model 962 Dual Point Electronics

Input Power	Bezel	Power Board	Logic Board
DC line	003-1230-002	030-3594-002	030-3595-001
AC line	003-1230-002	030-3594-001	030-3595-001
DC loop	003-1230-003	030-3593-001	None

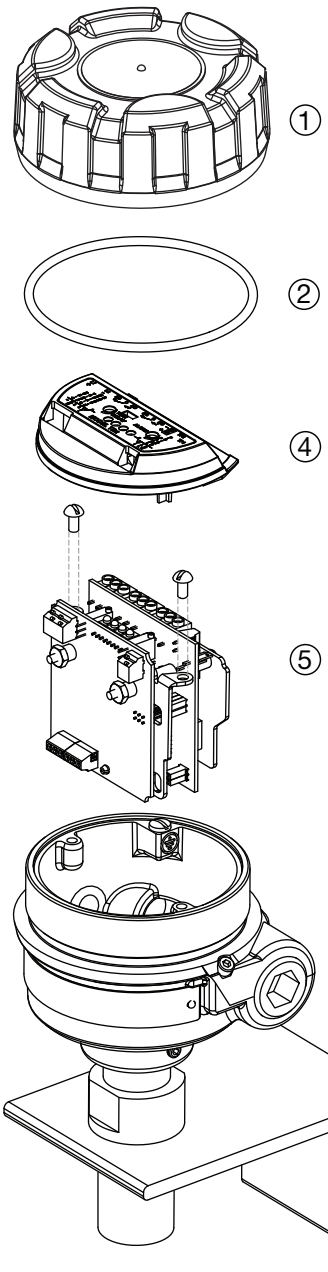

3.9 Model Number

3.9.1 961/962 Electronics

BASIC MODEL NUMBER

961	Single-point electronics
962	Dual-point electronics

INPUT POWER

2	18 to 32 VDC line-powered
5	11 to 35 VDC loop-powered
7	102 to 265 VAC line-powered

OUTPUT SIGNAL

0	mA current shift (available with Input Power code 5)
D	5 amp gold flash relays (available with Input Power codes 2 or 7)

MOUNTING

0	Integral
1	Remote (requires Connecting Cable below)

AGENCY APPROVAL

1	FM/CSA Intrinsically safe & Non-incendive (available with Output Signal code 0)
3	FM/CSA Non-incendive & Explosion proof (available with Output Signal code D)
A	ATEX II 1G EEx ia II C T5, Intrinsically safe
C	ATEX II 1/2G EEx d II C T6, Explosion proof

ELECTRONICS HOUSING

0	Cast aluminum with ¾" NPT dual conduit entries
1	Cast aluminum with M20 dual conduit entries
2	Cast SS with ¾" NPT dual conduit entries
3	Cast SS with M20 dual conduit entries

9	6		—			A	0	—			

3.9.2 Connecting Cable

CABLE LENGTH

Length of cable from remote electronics to transducer in feet
Maximum Length: 150 feet (45 meters)
Example: 12 feet = **012**

0	3	7	—	3	3	1	6	—			

3.9.3 Model 961 Single Point Transducer

TRANSDUCER UNIT OF LENGTH

A	English (length in inches)
M	Metric (length in centimeters)

MATERIALS OF CONSTRUCTION

A	316/316L stainless steel
S	316/316L with 20 Ra sanitary finish (use only with Process Connection codes 3T, 4T, or VV)
B	Hastelloy C-276
C	Monel
R	Kynar (use only with Process Connection codes 11, 23, 33, 43, BA, CA, DA)
P	CPVC (use only with Process Connection codes 11, 23, 33, 43, BA, CA, DA)
N	316/316L stainless steel, NACE construction
K	316/316L stainless steel, ASME B31.1 &B31.3 construction

PROCESS CONNECTIONS

THREADED CONNECTIONS

11	¾" NPT
21	1" NPT
22	1" BSP (G1)

SANITARY CONNECTIONS

3T	1"/1½" Tri-Clamp® 16 AMP fitting
4T	2" Tri-Clamp® 16 AMP fitting
VV	DN65 – Varivent

ANSI RAISED FACE FLANGES

23	1" 150# ANSI RF flange
24	1" 300# ANSI RF flange
25	1" 600# ANSI RF flange
33	1½" 150# ANSI RF flange
34	1½" 300# ANSI RF flange
35	1½" 600# ANSI RF flange
43	2" 150# ANSI RF flange
44	2" 300# ANSI RF flange
45	2" 600# ANSI RF flange

EN/DIN FLANGES

BA	DN 25 PN 16 EN 1092-1 Type A
BB	DN 25 PN 25/40 EN 1092-1 Type A
BC	DN 25 PN 63/100 EN 1092-1 Type B2
CA	DN 40 PN 16 EN 1092-1 Type A
CB	DN 40 PN 25/40 EN 1092-1 Type A
CC	DN 40 PN 63/100 EN 1092-1 Type B2
DA	DN 50 PN 16 EN 1092-1 Type A
DB	DN 50 PN 25/40 EN 1092-1 Type A
DD	DN 50 PN 63 EN 1092-1 Type B2
DE	DN 50 PN 100 EN 1092-1 Type B2

ACTUATION LENGTH (unit of length specified in second digit)

1" to 130" in 1" increments 1" minimum for NPT process connections 2" minimum for BSP, sanitary, and flanged process connections Example: 4 inches = 004
3 cm to 330 cm in 1 cm increments 3 cm minimum for NPT process connections 5 cm minimum for BSP, sanitary, and flanged process connections Example: 6 centimeters = 006

9		1				A			

3.9.4 Model 962 Dual Point Transducer

TRANSDUCER UNIT OF LENGTH

A	English (length in inches)
M	Metric (length in centimeters)

MATERIALS OF CONSTRUCTION

A	316/316L stainless steel
P	CPVC (use only with Process Connection codes 11, 23, 33, 43, BA, CA, DA)
K	316/316L stainless steel, ASME B31.1 &B31.3 construction

PROCESS CONNECTIONS

THREADED CONNECTIONS

11	¾" NPT
21	1" NPT
22	1" BSP (G1)

ANSI RAISED FACE FLANGES

23	1" 150# ANSI RF flange
24	1" 300# ANSI RF flange
25	1" 600# ANSI RF flange
33	1½" 150# ANSI RF flange
34	1½" 300# ANSI RF flange
35	1½" 600# ANSI RF flange
43	2" 150# ANSI RF flange
44	2" 300# ANSI RF flange
45	2" 600# ANSI RF flange

EN/DIN FLANGES

BA	DN 25 PN 16 EN 1092-1 Type A
BB	DN 25 PN 25/40 EN 1092-1 Type A
BC	DN 25 PN 63/100 EN 1092-1 Type B2
CA	DN 40 PN 16 EN 1092-1 Type A
CB	DN 40 PN 25/40 EN 1092-1 Type A
CC	DN 40 PN 63/100 EN 1092-1 Type B2
DA	DN 50 PN 16 EN 1092-1 Type A
DB	DN 50 PN 25/40 EN 1092-1 Type A
DD	DN 50 PN 63 EN 1092-1 Type B2
DE	DN 50 PN 100 EN 1092-1 Type B2

Important:
Use the "A" dimension as the actuation length code. The "B" dimension must also be specified in quote/order.

Example:
For a 962 with an "A" dimension of 18" and a "B" dimension of 7", specify actuation length code 018.

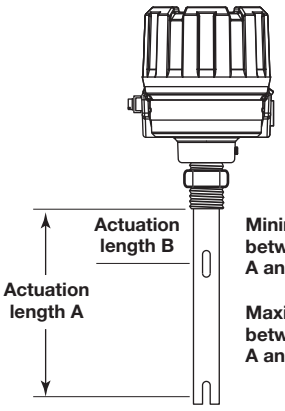

"A" DIMENSION ACTUATION LENGTH (units specified in second digit)

5" to 130" in 1" increments 5" minimum for NPT process connections 6" minimum for BSP, and flanged process connections Example: 5 inches = 005
13 cm to 330 cm in 1 cm increments 13 cm minimum for NPT process connections 15 cm minimum for BSP, and flanged process connections Example: 13 centimeters = 013

9		2				A			

Service Policy

Owners of Magnetrol controls may request the return of a control or any part of a control for complete rebuilding or replacement. They will be rebuilt or replaced promptly. Controls returned under our service policy must be returned by Prepaid transportation. Magnetrol will repair or replace the control at no cost to the purchaser (or owner) other than transportation if:

1. Returned within the warranty period; and
2. The factory inspection finds the cause of the claim to be covered under the warranty.

If the trouble is the result of conditions beyond our control; or, is NOT covered by the warranty, there will be charges for labor and the parts required to rebuild or replace the equipment.

In some cases it may be expedient to ship replacement parts; or, in extreme cases a complete new control, to replace the original equipment before it is returned. If this is desired, notify the factory of both the model and serial numbers of the control to be replaced. In such cases, credit for the materials returned will be determined on the basis of the applicability of our warranty.

No claims for misapplication, labor, direct or consequential damage will be allowed.

Return Material Procedure

So that we may efficiently process any materials that are returned, it is essential that a "Return Material Authorization" (RMA) number be obtained from the factory, prior to the material's return. This is available through Magnetrol's local representative or by contacting the factory. Please supply the following information:

1. Company Name
2. Description of Material
3. Serial Number
4. Reason for Return
5. Application

Any unit that was used in a process must be properly cleaned in accordance with OSHA standards, before it is returned to the factory.

A Material Safety Data Sheet (MSDS) must accompany material that was used in any media.

All shipments returned to the factory must be by prepaid transportation.

All replacements will be shipped F.O.B. factory.

NOTE: See Electrostatic Discharge Handling Procedure on page 2.

Magnetrol®

5300 Belmont Road • Downers Grove, Illinois 60515-4499 • 630-969-4000 • Fax 630-969-9489 • www.magnetrol.com
145 Jardin Drive, Units 1 & 2 • Concord, Ontario Canada L4K 1X7 • 905-738-9600 • Fax 905-738-1306
Heikensstraat 6 • B 9240 Zele, Belgium • 052 45.11.11 • Fax 052 45.09.93
Regent Business Ctr., Jubilee Rd. • Burgess Hill, Sussex RH15 9TL U.K. • 01444-871313 • Fax 01444-871317

STI®

5300 Belmont Road • Downers Grove, Illinois 60515-4499 • 630-969-4028 • Fax 630-969-9489 • www.sticontrols.com

Copyright © 2007 Magnetrol International, Incorporated. All rights reserved. Printed in the USA.

BULLETIN: 51-646.0
EFFECTIVE: January 2006

Kynar® is a registered trademark of Elf Atochem North America, Inc.
Hastelloy® is a registered trademark of HAYNES INTERNATIONAL, INC. (DELAWARE CORPORATION).
Monel® is a registered trademark of the INCO family of companies.

NFBUP, NFBUP-S, NFXUP, NFXUP-S

On/Off, Spring Return, 24 to 240 VAC



Torque min. 90 in-lb, for control of air dampers

Application

For On/Off, fail-safe control of dampers in HVAC systems. Actuator sizing should be done in accordance with the damper manufacturer's specifications. Control is On/Off from an auxiliary contact, or a manual switch.

The actuator is mounted directly to a damper shaft up to 1.05" in diameter by means of its universal clamp. A crank arm and several mounting brackets are available for applications where the actuator cannot be direct coupled to the damper shaft.

Operation

The NFB and NFX series actuators provide true spring return operation for reliable fail-safe application and positive close off on air tight dampers. The spring return system provides constant torque to the damper with, and without, power applied to the actuator.

The NFB and NFX series provides 95° of rotation and is provided with a graduated position indicator showing 0° to 95°.

The actuator may be stalled anywhere in its normal rotation without the need of mechanical end switches.

The NFBUP-S and NFXUP-S versions are provided with two built-in auxiliary switches. These SPDT switches provide safety interfacing or signaling, for example, for fan start-up. The switching function at the fail-safe position is fixed at +10°, the other switch function is adjustable between +10° to +90°. The NFBUP, NFBUP-S, NFXUP and NFXUP-S actuator is shipped at +5° (5° from full fail-safe) to provide automatic compression against damper gaskets for tight shut-off.

Technical Data		NFBUP, NFBUP-S, NFXUP, NFXUP-S
Power supply		24...240 VAC -20% / +10%, 50/60 Hz 24...125 VDC ±10%
Power consumption	running	6 W
	holding	2.5 W
Transformer sizing		6 VA @ 24 VAC (class 2 power source) 6.5 VA @ 120 VAC 9.5 VA @ 240 VAC
Electrical connection		
NFBUP...		3 ft, 18 GA appliance cable, 1/2" conduit connector **-S models:** Two 3 ft, 18 gauge appliance cables with 1/2" conduit connectors
NFXUP...		3 ft [1m], 10 ft [3m] or 16 ft [5m] 18 GA appliance cable, with or without 1/2" conduit connector **-S models:** two 3 ft [1m], 10 ft [3m] or 16 ft [5m] appliance cables with or without 1/2" conduit connectors
Overload protection		electronic throughout 0 to 95° rotation
Control		on/off
Torque		90 in-lb [10 Nm] minimum
Direction of rotation	spring	reversible with CW/CCW mounting
Mechanical angle of rotation		95° (adjustable with mechanical end stop, 35° to 95°)
Running time	motor	< 75 seconds
	spring	20 seconds @ -4°F to 122°F [-20°C to 50°C]; < 60 seconds @ -22°F [-30°C]
Position indication		visual indicator, 0° to 95° (0° is full spring return position)
Manual override		5 mm hex crank (3/16" Allen), supplied
Humidity		max. 95% RH non-condensing
Ambient temperature		-22°F to 122°F [-30°C to 50°C]
Storage temperature		-40°F to 176°F [-40°C to 80°C]
Housing		Nema 2, IP54, Enclosure Type2
Housing material		zinc coated metal and plastic casing
Agency listings †		cULus acc. to UL60730-1A/-2-14, CAN/CSA E60730-1:02, CE acc. to 2004/108/EC & 2006/95/EC
Noise level		<50dB(A) motor @ 75 seconds ≤62dB(A) spring return
Servicing		maintenance free
Quality standard		ISO 9001
Weight		4.15 lbs (1.9 kg), 4.4 lbs (2.0 kg) with switches
† Rated Impulse Voltage 4kV, Type of action 1.AA (1.AA.B for -S version), Control Pollution Degree 3.		
NFBUP-S, NFXUP-S		
Auxiliary switches		2 x SPDT 3A (0.5A) @ 250 VAC, UL approved one set at +10°, one adjustable 10° to 90°

Dimensions (Inches [mm])

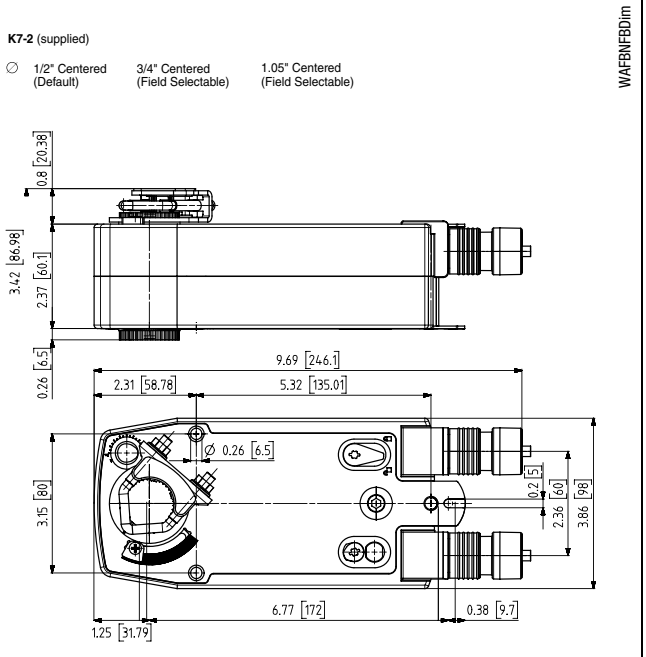

M40024 - 05/10 - Subject to change. © Belimo Aircontrols (USA), Inc.

Accessories

AV 8-25	Shaft extension
IND-AFB	Damper position indicator
K7-2	Universal clamp for up to 1.05" dia jackshafts
KH-AFB	Crank arm
TF-CC US	Conduit fitting
Tool-06	8mm and 10 mm wrench
ZG-100	Universal mounting bracket
ZG-101	Universal mounting bracket
ZG-118	Mounting bracket for Barber Colman® MA 3../4.., Honeywell® Mod III or IV or Johnson® Series 100 replacement or new crank arm type installations
ZG-AFB	Crank arm adaptor kit
ZG-AFB118	Crank arm adaptor kit
ZS-100	Weather shield (metal)
ZS-150	Weather shield (polycarbonate)
ZS-260	Explosion-proof housing
ZS-300	NEMA 4X housing

Note: When using NFBUP, NFBUP-S, NFXUP, NFXUP-S actuators, only use accessories listed on this page.

For actuator wiring information and diagrams, refer to Belimo Wiring Guide.

Typical Specification

On/Off spring return damper actuators shall be direct coupled type which require no crank arm and linkage and be capable of direct mounting to a jackshaft up to a 1.05" diameter. The actuators must be designed so that they may be used for either clockwise or counterclockwise fail-safe operation. Actuators shall be protected from overload at all angles of rotation. If required, two SPDT auxiliary switch shall be provided having the capability of one being adjustable. Actuators with auxiliary switches must be constructed to meet the requirements for Double Insulation so an electrical ground is not required to meet agency listings. Actuators shall be cULus Approved and have a 5 year warranty, and be manufactured under ISO 9001 International Quality Control Standards. Actuators shall be as manufactured by Belimo.

Wiring Diagrams

INSTALLATION NOTES

1 Provide overload protection and disconnect as required.

2 ***CAUTION** Equipment Damage!*
Actuators may be connected in parallel.
Power consumption and input impedance must be observed.

3 No ground connection is required.

4 For end position indication, interlock control, fan startup, etc., NFBUP-S and NFXUP-S incorporates two built-in auxiliary switches: 2 x SPDT, 3A (0.5A) @250 VAC, UL Approved, one switch is fixed at +10°, one is adjustable 10° to 90°.

APPLICATION NOTES

Meets cULus requirements without the need of an electrical ground connection.

***WARNING** Live Electrical Components!*
During installation, testing, servicing and troubleshooting of this product, it may be necessary to work with live electrical components. Have a qualified licensed electrician or other individual who has been properly trained in handling live electrical components perform these tasks. Failure to follow all electrical safety precautions when exposed to live electrical components could result in death or serious injury.

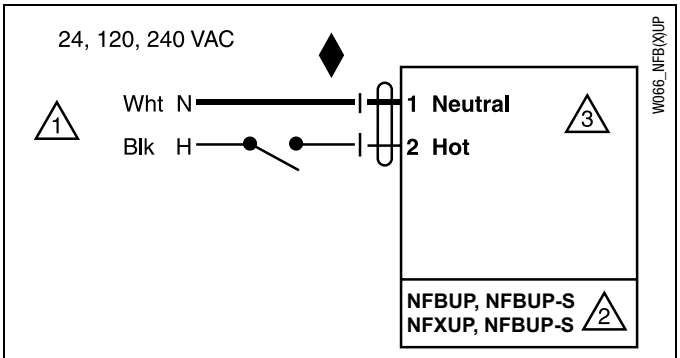

On/Off wiring for NFBUP, NFXUP

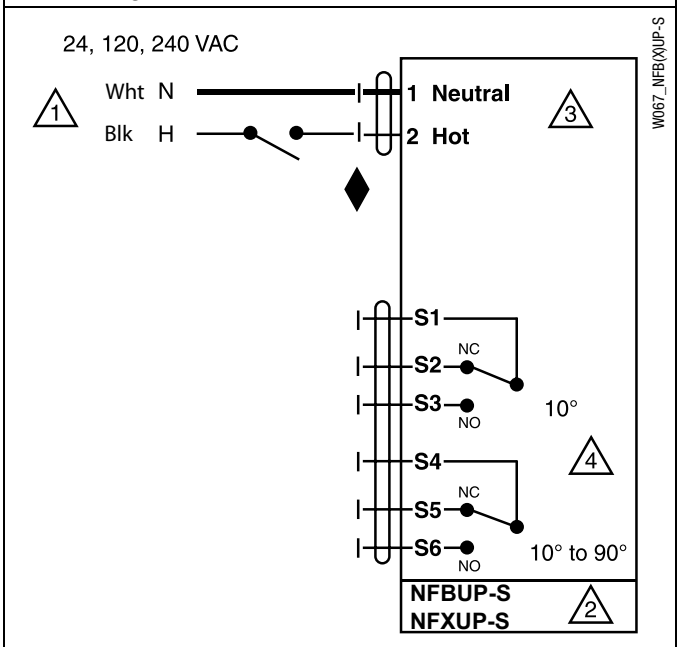

Auxiliary Switches for NFBUP-S, NFXUP-S

M40024 - 05/10 - Subject to change. © Belimo Aircontrols (USA), Inc.

EXPLOSION PROOF DIRECT COUPLED ACTUATOR ENCLOSURE (FOR DAMPERS)

ZS-260

DESCRIPTION

The **Belimo Model ZS-260 explosion proof direct coupled actuator enclosure** is designed for Belimo Models GM, AFB, LF, and NFB direct-mount style actuators installed in a hazardous environment. The **ZS-260 Series** has NEMA 7 and NEMA 9 construction for field-mounted actuators with a drive shaft in front or rear depending on application. The enclosure is a cast aluminum housing with explosion proof ratings for Class I, Division 1, Groups C, D and Class II, Division 1, Groups E, F, G. They are for use with any damper with appropriate linkage.



FEATURES

- ***Class I, Division 1, Groups C, D; Class II, Division 1, Groups E, F, G***
- ***Full range of approved actuators***

SPECIFICATIONS

Conduit Opening	Two, 3/4" FNPT	**Enclosure Rating**	NEMA 7CD, NEMA 9EG
Materials Of Construction	Cast aluminum, bolted cover	**Dimensions**	16" H x 10" W x 9.5" D (40.6 x 25.4 x 24.1 cm)
Drive Shaft	SS, 1/2" dia (1.27 cm), 1.5" L (3.8 cm)	**Approvals**	UL listed File #E171998, CSA
Area	Class I, Division 1, Groups C, D; Class II, Division 1, Groups E, F, G	**Weight**	31 lb (14.1 kg)
Compatible Actuators	AFB, AFX, AF, NFB, NFX, GMB, GMX, AMB, AMX (see actuator specification for torque and control details)	**Warranty**	1 year

CAUTION: Conduit seal MUST be installed within code-required distance from enclosure to maintain explosion proof rating.

WARNING: This device is not listed for use in areas classified as Group A (acetylene) or Group B (hydrogen).

ORDERING INFORMATION

MODEL	DESCRIPTION
ZS-260	Damper actuator enclosure with front or rear drive shaft
(Order linkage and actuator separately)	

	RELATED PRODUCTS	PAGE
KG8-K	Ball joint, 90° angle, use with 5/16" diameter pushrod	**7**
KH8-K	Crank arm for 3/4" shaft, 3-1/2" length, use with KG8-K ball joint	**7**
PR-48	5/16" dia., 48" (1.2m) length push rod	**8**
ZG-109	10-ga galvanized right angle mounting plate, 13"H x 10"W x 6"D (25.4 x 33 x 15.2 cm)	

ZS-260 Explosion-proof Housing

For GM…, AM…, AFB..., AFX…, NFB…, NFX..., LF… Actuators



Application

The ZS-260 explosion-proof housing may be used with the GM…, AM…, NFB…, NFX..., AFB…, AFX…, AF..., LF… series actuators. This housing is not designed for direct coupling. UL and CSA; Class I, Division 1&2, Groups B, C, D, (NEMA 7), Class II, Division 1&2, Groups E, F and G, (NEMA 9), Class III, Hazardous (classified) Locations, outdoor application NEMA 4X.

Operation

The ZS-260 enclosure is designed so that the required actuator may be easily field mounted into the enclosure. The actuator is fastened on to the internal portion of the operating shaft and secured at the end with an anti-rotation strap. A crank-arm, such as the KH8, is mounted to the external portion of the operating shaft for connection to connection to the damper linkage. ZG-109 right angle, and ZG-110 standoff mounting brackets may be used (see back).

The ZS-260 is designed so that the operating shaft can be mounted on either the front or rear side of the housing.

Accessories

KH8	Universal crank arm
KG8	Universal ball joint
KG10	Universal ball joint
ZG-109	Right angle mounting bracket
ZG-110	Stand-off mounting bracket

Technical Data	**ZS-260**
Material Housing	cast, copper-free, aluminum,
Cover Bolts	stainless steel
Operating Shaft	stainless steel
Conduit holes	3/4"–14 NPT (2 supplied), **see NOTE 1**
Operating shaft diameter	1/2 inch [12.7]
Operating shaft location	front or rear side of housing (Field selected)
Approved applications	UL and CSA; Class I, Division 1&2, Groups B, C, D, (NEMA 7), Class II, Division 1&2, Groups E, F and G, (NEMA 9), Class III, Hazardous (classified) Locations, outdoor application NEMA 4X.
Weight	31.0 lb. (14.0 kg) without actuator

NOTE 1: Fittings that meet the requirements of the hazardous location must be used. All applications must comply with applicable local and/or national electric code.

NOTE: Since conditions of use of this product are outside the control of Belimo, the purchaser should determine suitability of the product for their intended use, and assumes all risk and liability in connection therewith.

Dimensions (Inches [mm])

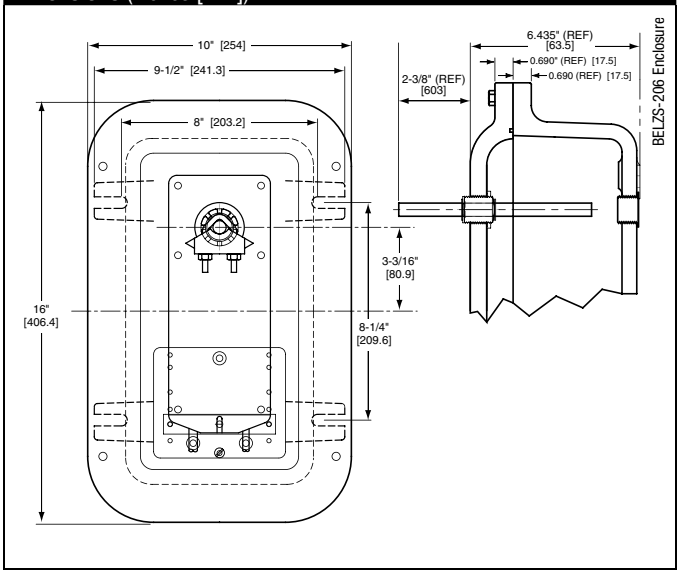

M40024 - 05/10 - Subject to change. © Belimo Aircontrols (USA), Inc.

ZS-260 Explosion-proof Housing

For GM…, AM…, AFB..., AFX…, NFB…, NFX..., LF… Actuators

ZS-260 Shaft Thru Front

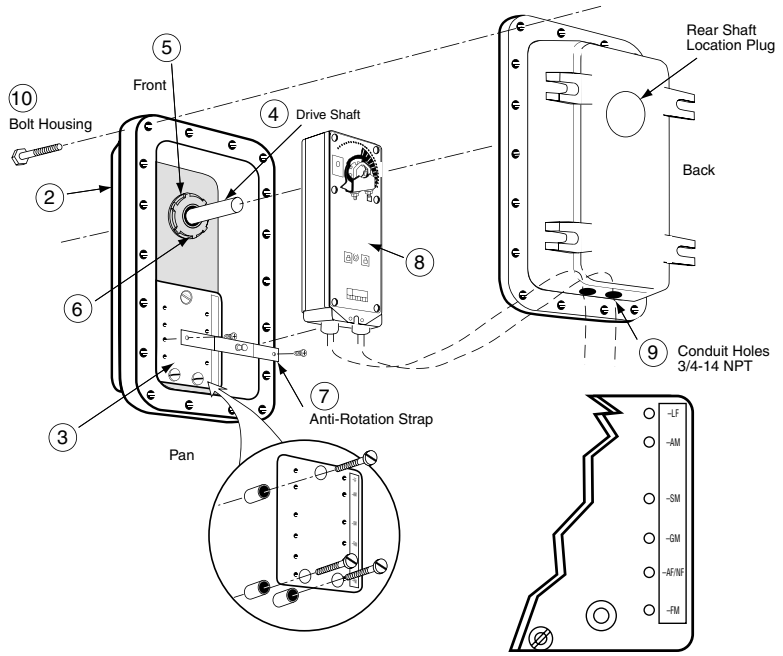

ZS-260 Mounting Instructions

1. Determine proper operating shaft location.
2. Remove threaded plug from the hole in which the operating shaft will be mounted.
3. Install the anti-rotation strap, mounting plate, to the side of the housing where the operating shaft will be mounted.
4. From the inside surface of the housing, insert the operating shaft, short length first, into the mounting hole.
5. Hand tighten the shaft bushing into the housing until the star nut/seal is in contact with the face of the housing.
6. Using a screw driver blade, drive the star nut/seal clockwise until the bushing is locked into place.
7. Install the anti-rotation strap into the mounting plate at the designated holes for the actuator to be used.
8. Install actuator.
9. Wire actuator (per electrical code).
10. Bolt housing together.

Typical ZG-109 Mounting

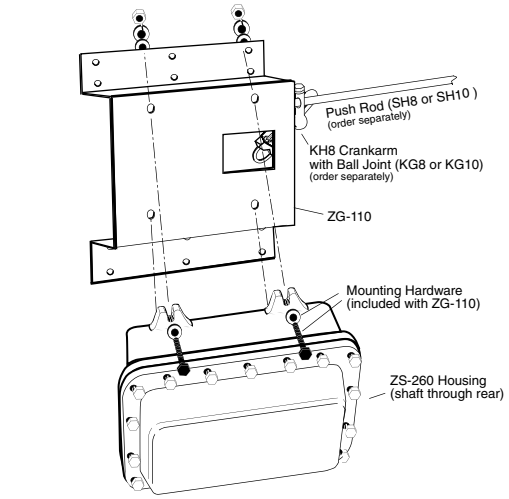

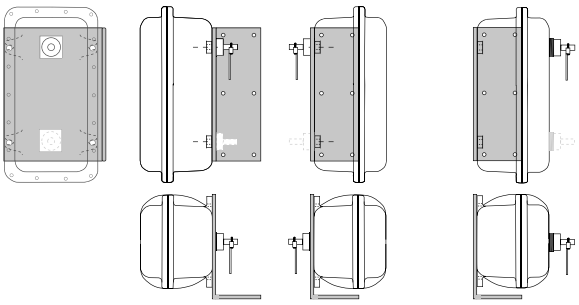

Typical ZG-110 Mounting

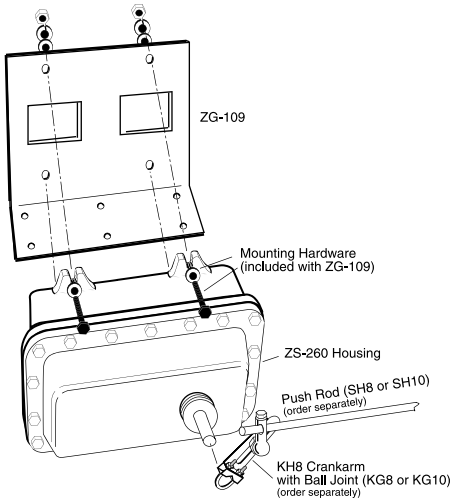

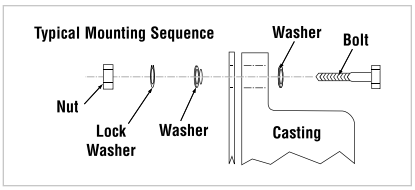

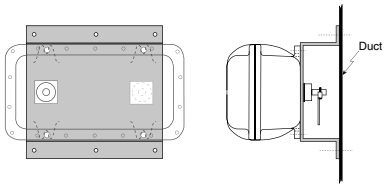

M40024 - 05/10 - Subject to change. © Belimo Aircontrols (USA), Inc.



ZS-300

ZS-300 NEMA 4X Housing

For AMB, GMB, LF, NFB, NFX, AFB, AFX, AF Series Actuators

Application

The ZS-300 (-1) NEMA 4X enclosures may be used with AMB, GMB, LF, NF, and AF Belimo actuators. They are intended for use primarily to provide protection against corrosion, windblown dust and rain, splashing water, hose-directed water; undamaged by the formation of ice on the enclosure. Type 304 stainless steel enclosures resist moisture, dust, salt, and corrosive chemicals, and are easy to keep clean for sanitary applications.

Operation

The ZS-300 enclosures are designed so that the required actuator may be easily mounted in the enclosure. The operating shaft and coupling are inserted from the backside through the rotating shaft seal. The actuator is fastened on the end of the operating shaft and secured at the end with an anti-rotation strap. Adjustable mounting brackets, if supplied, are assembled to the fixed mounting holes at the top and bottom of the enclosure with stainless steel nuts, bolts and lock washers. The direct drive coupling is designed for a 1/2" round or hexagonal shaft and secured with two square head set screws. Mounting brackets are adjusted and secured in place.

Ordering Information

ZS-300	304 stainless steel housing with mounting brackets
ZS-300-1	304 stainless steel housing without mounting brackets
ZS-300-5	316L stainless steel housing with mounting brackets

Accessories

ZS-300-BK	Mounting bracket set
ZS-300-C1	1/2" shaft adaptor (standard with housing)
ZS-300-C2	3/4" shaft adaptor
ZS-300-C3	1" shaft adaptor

Technical Data	ZS-300 (-1) (-5)
Material	All stainless steel housing, door, (with microcellular urethane gasket), shaft, coupling, universal mounting plate, and hardware.
Conduit holes	Field drilled as required. UL listed electrical fittings for NEMA 4X conditions must be used.
Drive shaft/coupler	1/2" by 5 15/16" long stainless steel with integral coupling for direct mounting to 1/2" round or hexagonal drive shafts. Square head set screws are stainless steel.
Rotating shaft seal	6061 aluminium hub with black anodize plating, bronze oilite bearings, 10 PSI, Nitrile, bi-rotational, hydrodynamic, radial lip Wave seal.
Industry standards	The Belimo ZS-300 NEMA 4X enclosure and Belimo model AMB, GMB, LF, NFB(X), AF, and AFB(X) are UL listed. These enclosures conform to the NEMA standard for Type 4X (water-tight, dust-tight and corrosion resistant).
Weight	11 lbs. [5 kg] without actuator or mounting brackets.

Dimensions (Inches [mm])

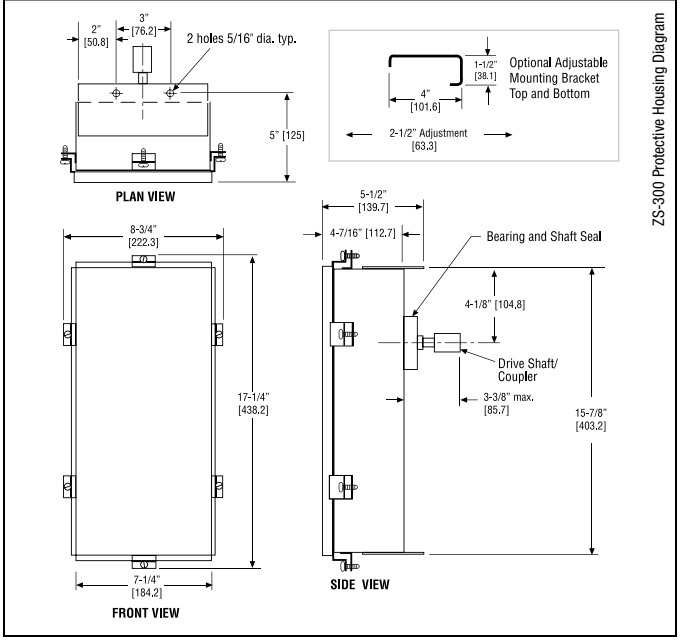

M40024 - 05/10 - Subject to change. © Belimo Aircontrols (USA), Inc.

ZS-300 (-1, -5)

NEMA 4X, stainless steel, corrosion resistant enclosures for AM, GM, NFB, NFX, AFB, AFX and AF actuators

ZS-300 Mounting Instructions

1. The damper operating shaft should extend approximately 1-1/2 inches from the damper assembly or duct side. Mount the drive shaft/coupler ① to the damper operating shaft ②. Fasten the coupler to the damper operating shaft by tightening the two 3/8 inch square head set screws ③.
2. Determine the housing mounting orientation for the application.
3. Locate the housing hole position(s) for the control wiring of the actuator.
4. Make the necessary holes in the housing for the electrical fittings. All fittings must be rated for use in NEMA 4X applications.
5. Install (if ordered with) the 2 mounting brackets ④ to the housing using the four 1/4-20 screws, washers, and nuts ⑤. Do not tighten.
6. Carefully slide the housing over the drive shaft.
7. Place the housing in the desired mounting position. Transfer the mounting hole locations from the mounting bracket to the mounting surface.
8. Drill the 4 holes and fasten the brackets to the surface.
9. Install the anti-rotation strap to the housing in the correct location for the actuator which is being used.
10. Mount the actuator to the drive shaft using the instructions for the actuator being used. Finger tighten the nuts of the universal clamp. Make sure the back of the actuator is parallel to the back of the housing.
11. The operating shaft must pass through the mounting clamp at least 3/8 of an inch. It must not extend beyond the front of the housing. Slide the actuator/housing assembly in the mounting brackets to obtain the proper position.
12. Tighten the mounting brackets to the housing. Verify that the back of the actuator is still parallel to the back of the housing. Tighten the nuts on the universal clamp.
13. Make all of the required electrical connections.
14. Test the actuator/damper operation.
15. Fasten the housing cover ⑥ using the 6 swivel clamps.

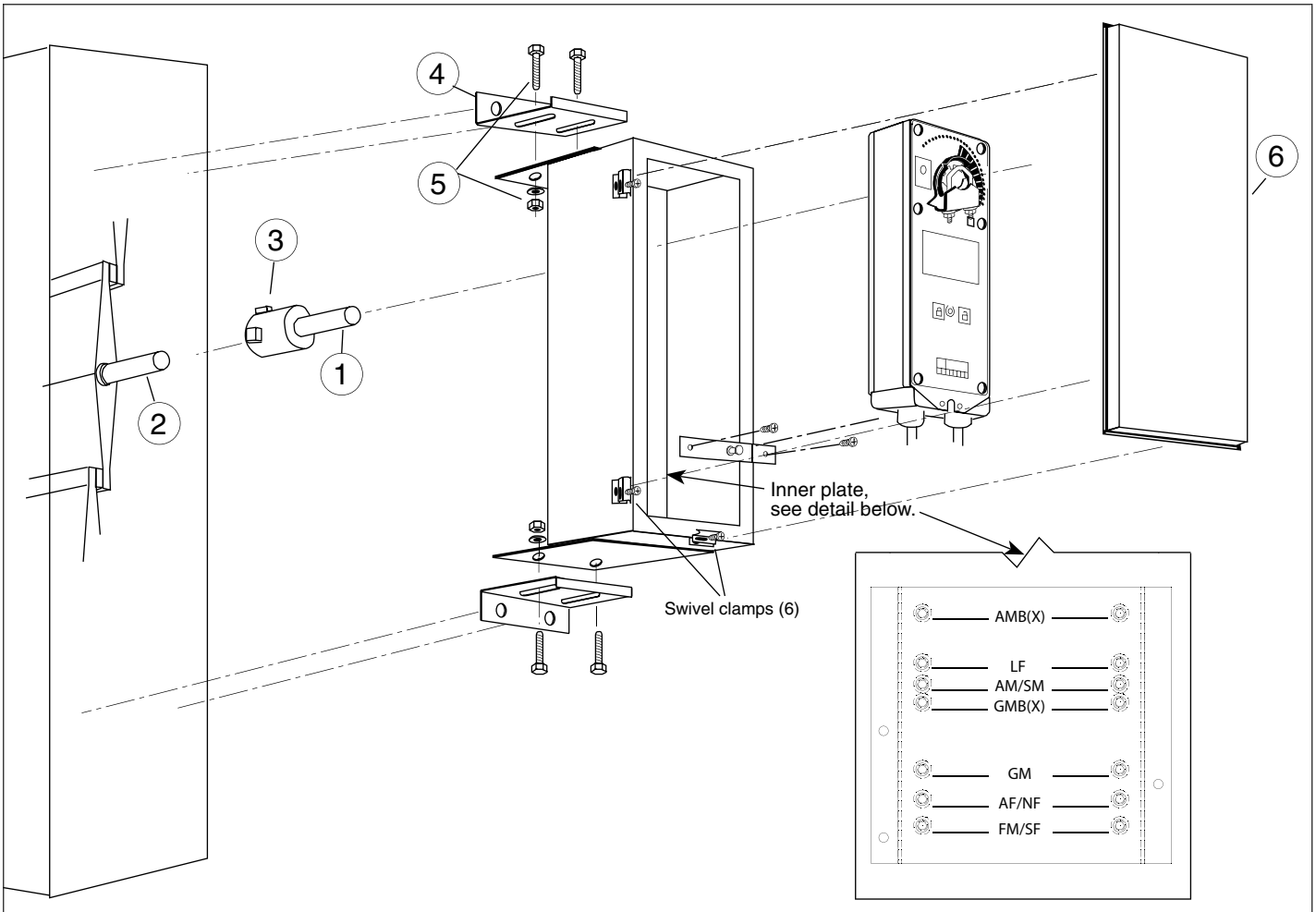

Anti-Rotation Strap Mounting Locations*

*AFB, AFX, NFB and NFX can be installed using GM mounting location without the need of the Z-AF retrofit bracket.

M40024 - 05/10 - Subject to change. © Belimo Aircontrols (USA), Inc.

Explosion-Proof Exhaust Fan

The EFX Explosion-Proof Exhaust Fan is designed for hazardous and general purpose industrial applications. The EFX is constructed with epoxy-coated steel panels and spark resistant aluminum fan blades for ventilation of combustible materials, vapors and hazardous fumes. The EFX is fully assembled for easy installation, has explosion-proof motors that are CSA approved and/or UL listed with fan guards conforming to OSHA specifications.

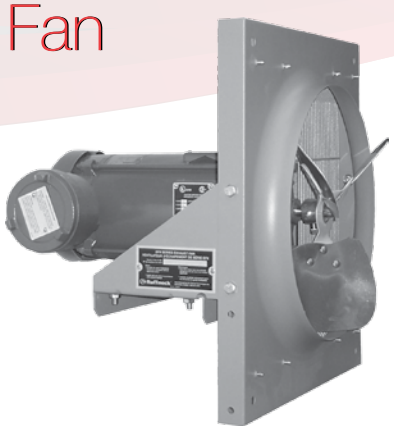

EFX General Specifications

Approvals	Motors are CSA approved and/or UL listed
Hazardous Locations Classifications	Class I, Div. 1 & 2, Groups C, D Class II, Div. 1 & 2, Groups E, F, G Temperature Code: T3B 329°F (165°C)
Motors	CSA approved and/or UL listed permanently lubricated ball bearing type with rigid base. Explosion-proof or totally enclosed construction All standard voltages for 60 and 50 hertz are available
Fan	Aluminum blade. Steel spider and hub with 5/8" (15.875 mm) bore Optional Heresite® coating for corrosive atmospheres
Fan Guard	Split design with close wire spacing, meets OSHA requirements
Mounting	Four 3/8" (9.5 mm) diameter holes Must be mounted to a rigid structure
Frame Material	16-gauge (0.060" / 1.52 mm) epoxy-coated steel Optional stainless-steel or Heresite® coating for corrosive atmospheres

Model		**EFX12**	**EFX16**	**EFX20**	**EFX24**	**EFX30**
Fan Diameter		12" (305 mm)	16" (406 mm)	20" (508 mm)	24" (610 mm)	30" (762 mm)
Motor*		1/2 HP, 60Hz (0.373 kW)	1/2 HP, 60Hz (0.373 kW)	1/2 HP, 60Hz (0.373 kW)	1/2 HP, 60Hz (0.373 kW)	3/4 HP, 60Hz (0.560 kW)
Motor Speed		1725 RPM	1725 RPM	1725 RPM	1725 RPM	1140 RPM
Net Weight		51.0 lbs (23.1 kg)	55.0 lbs (24.9 kg)	59.0 lbs (26.7 kg)	61.0 lbs (27.7 kg)	67.0 lbs (30.4 kg)
Shipping Weight		56.0 lbs (25.4 kg)	61.0 lbs (27.7 kg)	67.0 lbs (30.3 kg)	96.0 lbs (43.5 kg)	114.0 lbs (51.7 kg)
Dimensions	**Width**	16.1"	20.2"	24.2"	28.1"	34.0"
		(410 mm)	(513 mm)	(615 mm)	(715 mm)	(863 mm)
	Height	18.2"	23.1"	27.1"	31.0"	37.1"
		(462 mm)	(588 mm)	(688 mm)	(788 mm)	(942 mm)
	Depth	15.4"	14.9"	16.1"	15.5"	15.6"
		(392 mm)	(378 mm)	(410 mm)	(394 mm)	(397 mm)

Note:
50Hz units also available.

EFX

Model Coding

EFX 12 A 1 A

EXHAUST FAN MODEL	
EFX	EXHAUST FAN

FAN SIZE	
12” (305 mm) DIA	**12**
16” (406 mm) DIA	**16**
20” (508 mm) DIA	**20**
24” (610 mm) DIA	**24**
30” (762 mm) DIA	**30**

CABINET MATERIAL	
EPOXY POWDER COATED CARBON STEEL	**A**
HERESITE® PHENOLIC COATED CARBON STEEL	**B**
Stainless-steel	**C**

	MOTOR ELECTRICAL			
		VOLTS	PHASE	HERTZ
	A	115	1	60
	B	208	1	60
	C	208	3	60
	D	230	1	60
	E	230	3	60
①②	**F**	460	1	60
	G	460	3	60
	H	575	3	60
	I	220	1	50
	J	380	3	50
②	**K**	440	3	50

	MOTOR ENCLOSURE	
	1	TOTALLY ENCLOSED
	2	X-PROOF, GR C, D, E , F & G
②	**3**	WASHDOWN
②	**4**	WASHDOWN Stainless-steel
②	**5**	SPECIAL MOTOR

Note:
① Only available for Class 1 Group D, Class 2 Group F & G.
② Consult factory for motor availability.

Air Flow Rating

MODEL		AIR DELIVERY AT STATIC PRESSURE (INCHES-WATER GAGE)								
		0.00	**0.05**	**0.10**	**0.15**	**0.20**	**0.25**	**0.30**	**0.38**	**0.50**
EFX12	CFM	1543	1498	1450	1389	1313	1215	1098	931	756
	m^3/hr	2622	2544	2464	2359	2231	2065	1866	1582	1284
EFX16	CFM	2320	2249	2172	2101	2022	1936	1815	1558	1420
	m^3/hr	3942	3821	3691	3570	3436	3289	3083	2646	2412
EFX20	CFM	3727	3651	3577	3501	3406	3309	3220	3021	2488
	m^3/hr	6333	6203	6077	5948	5787	5623	5471	5134	4228
EFX24	CFM	4501	4392	4286	4162	4053	3924	3796	3633	3401
	m^3/hr	7647	7463	7281	7071	6885	6667	6450	6173	5779
EFX30	CFM	6635	6205	5929	5634	5377	5149	4925	4563	3976
	m^3/hr	11273	10542	10074	9572	9135	8748	8368	7753	6755

Performance Data for 60 Hertz Motor

60 Hertz EFX Explosion-Proof Exhaust Fan					
Class I, Div. 1 & 2, Groups C,D, Class II, Div. 1 & 2, Groups E,F,G					
Model	Fan Size	Voltage	Phase	Approximate Shipping Weight	
				lbs	kg
EFX-12A-2A	12	115	1	56	26
EFX-12A-2B	12	208	1	56	26
EFX-12A-2C	12	208	3	56	26
EFX-12A-2D	12	240	1	56	26
EFX-12A-2E	12	230	3	56	26
EFX-12A-2G	12	460	3	56	26
EFX-12A-2H	12	575	3	56	26
EFX-16A-2A	16	115	1	61	29
EFX-16A-2B	16	208	1	61	29
EFX-16A-2C	16	208	3	61	29
EFX-16A-2D	16	230	1	61	29
EFX-16A-2E	16	230	3	61	29
EFX-16A-2G	16	460	3	61	29
EFX-16A-2H	16	575	3	61	29
EFX-20A-2A	20	115	1	67	31
EFX-20A-2B	20	208	1	67	31
EFX-20A-2C	20	208	3	67	31
EFX-20A-2D	20	230	1	67	31
EFX-20A-2E	20	230	3	67	31
EFX-20A-2G	20	460	3	67	31
EFX-20A-2H	20	575	3	67	31
EFX-24A-2A	24	115	1	96	44
EFX-24A-2B	24	208	1	96	44
EFX-24A-2C	24	208	3	96	44
EFX-24A-2D	24	230	1	96	44
EFX-24A-2E	24	230	3	96	44
EFX-24A-2G	24	460	3	96	44
EFX-24A-2H	24	575	3	96	44
EFX-30A-2A	30	115	1	114	52
EFX-30A-2B	30	208	1	114	52
EFX-30A-2C	30	208	3	114	52
EFX-30A-2D	30	230	1	114	52
EFX-30A-2E	30	230	3	114	52
EFX-30A-2G	30	460	3	114	52
EFX-30A-2H	30	575	3	114	52

Performance Data for 50 Hertz Motor

50 Hertz EFX Explosion-Proof Exhaust Fan					
Class I, Div. 1 & 2, Groups C,D, Class II, Div. 1 & 2, Groups E,F,G					
Model	Fan Size	Voltage	Phase	Approximate Shipping Weight	
				lbs	kg
EFX-12A-2I	12	220	1	56	26
EFX-12A-2J	12	380	3	56	26
EFX-12A-2K	12	440	3	56	26
EFX-16A-2I	16	220	1	61	29
EFX-16A-2J	16	380	3	61	29
EFX-16A-2K	16	440	3	61	29
EFX-20A-2I	20	220	1	67	31
EFX-20A-2J	20	380	3	67	31
EFX-20A-2K	20	440	3	67	31
EFX-24A-2I	24	220	1	96	44
EFX-24A-2J	24	380	3	96	44
EFX-24A-2K	24	440	3	96	44
EFX-30A-2I	30	220	1	114	52
EFX-30A-2J	30	380	3	114	52
EFX-30A-2K	30	440	3	114	52

EFX Explosion-Proof Exhaust Fan Physical Dimensions

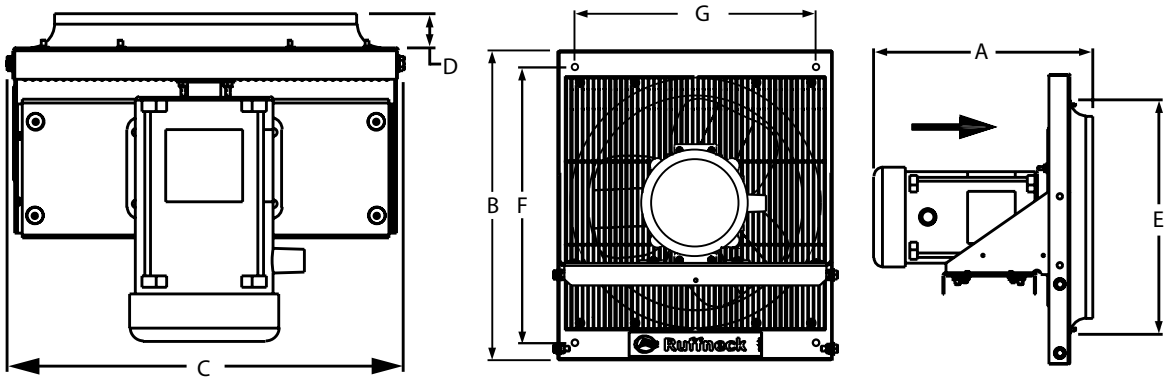

DIMENSION		EFX-12	EFX-16	EFX-20	EFX-24	EFX-30
A	mm	392.1	377.8	409.6	393.7	396.9
	in	15.4	14.9	16.1	15.5	15.6
B	mm	461.9	588	687.9	787.9	942.3
	in	18.2	23.2	27.1	31	37.1
C	mm	410	512.5	614.5	714.5	862.5
	in	16.1	20.2	24.2	28.1	34
D	mm	79.4	57.2	91.7	76.2	88.9
	in	3.1	2.2	3.6	3	3.5
E	mm	373.3	475.6	577.3	677.3	835.3
	in	14.7	18.7	22.7	24.7	32.9
F	mm	411.1	537.2	637.1	737.1	891.5
	in	16.2	21.2	25.1	29	35.1
G	mm	359.2	461.7	563.7	663.7	811.7
	in	14.1	18.2	22.2	26.1	32

Advanced Series Heaters

The Ruffneck™ Advanced Series heaters are designed for rugged industrial applications and are available in 37 models from 6,000 to 1,200,000 BTU/hr. With a maximum operating pressure and temperature rating of 450 psi and 650°F respectively, the Advanced Series is perfect for steam, circulating hot water, and glycol heating systems or liquid cooling applications that include: flash stream condensers, lube oil coolers, and pump seal coolers, etc.

1½" or 2" NPT male inlet and outlet connections for reduced cost and ease of installation. 1½" or 2" 300# RF flanges are available as an option.

Epoxy powder coated 14-gauge (0.075") steel cabinet provides protection and durability. Special Heresite® coatings are available as an option.

Extruded aluminium louvres provide two-way directional control of discharge air.

Bolt-together cabinet offers ease of maintenance and cleaning of heat-exchanger core without disturbing the heater mounting arrangement or electrical connections.

Heavy gauge, embossed, high performance fan blade offers long life and improved air flow.

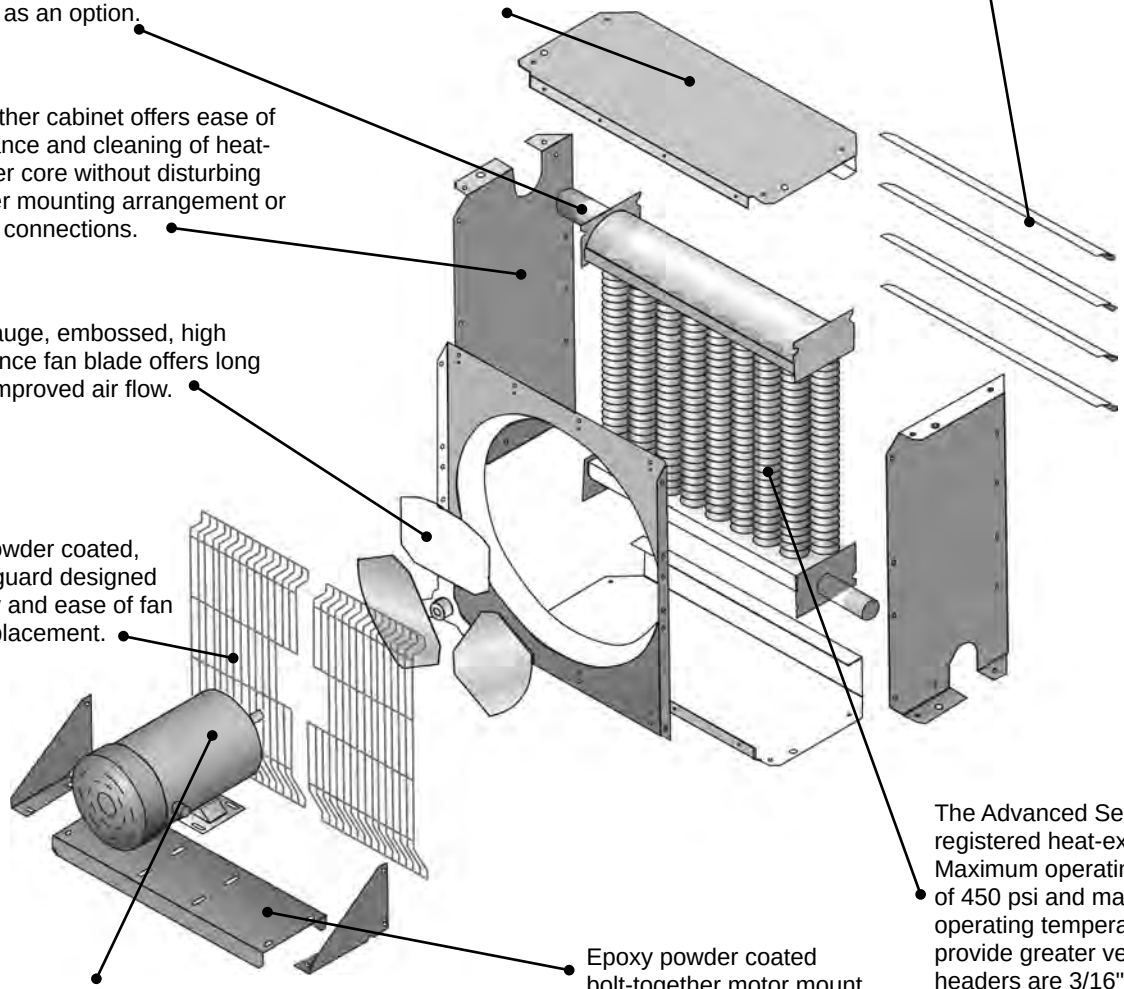

Epoxy powder coated, split fan guard designed for safety and ease of fan blade replacement.

The Advanced Series are CRN registered heat-exchangers. Maximum operating pressure of 450 psi and maximum operating temperature of 650°F provide greater versatility. Steel headers are 3/16" (0.187") thick to ensure ruggedness and long-lasting performance.

Epoxy powder coated bolt-together motor mount provides exceptional vibration handling.

Standard motors are UL listed and/or CSA approved industrial-duty, totally enclosed, 1725 RPM, 56 frame, 1/2 HP. Built for rugged environments, this motor is also available in explosion-proof models for hazardous locations.

AH - Advanced Horizontal Model



The Advanced Horizontal unit heater exchanger can be customised for your application. The heat exchanger is comprised of extruded finned tubing in 10, 9 and 5 fins per inch for varying steam conditions and/or where atmospheric particulate may cause premature fouling of the heater core. Additionally, the AH can handle more pressure than the HP and FR.

AV - Advanced Vertical Model



Ruffneck's Advanced Series unit heaters are designed for rugged industrial applications meeting the most demanding service and long life requirements.

While perfect for steam, circulating hot water or glycol heating systems, the Ruffneck™ Vertical Throw heaters are also suitable for a wide range of other heating fluids. In addition, they can be used for both space heating and liquid cooling applications.

AH - Advanced Horizontal Tandem Model



The 24" Tandem Advanced Horizontal Series is the largest unit in our line-up. Rather than expanding the cabinet and heat exchanger in both height and width, we just doubled the width to produce this unique model. This side-by-side arrangement also produces the lowest mounting profile in its class for a heater of equivalent output.

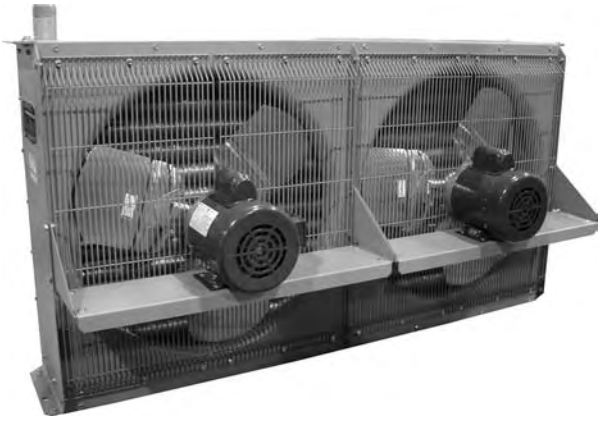

The dual fan arrangement allows for two smaller fans that can be operated at the standard 1725 RPM. Furthermore, dual fans provide for output modulation if separate motor thermostats are used. Separate motor thermostats produce better control of heating during periods of low demand by reducing the output of the heater.

Extruded Finned Tubing Types

5/8" Tension-Wound
Finned Tubing
10 Fins per Inch



Recommended for glycol or water applications, we offer our standard 5/8" outside diameter (16 gauge, 0.065” wall thickness) carbon steel tubes with tension wound aluminum fins (10 per inch). In most cases, the 5/8" tubing will be the most economical choice on a cost per BTU basis.

1" Extruded
Finned Tubing
9 Fins per Inch



Select this configuration of extruded finned tubing for more demanding applications. It utilizes 1" outside diameter (14 gauge, 0.083" wall thickness) carbon steel tubes with extruded aluminum fins (9 per inch).

1" Extruded
Finned Tubing
5 Fins per Inch



For the harshest steam applications and/or where atmospheric particulate may cause premature fouling of the heater core, use the 1" outside diameter (10 gauge, 0.135" wall thickness) carbon steel tubes with extruded aluminum fins (5 per inch).

Advanced Series- General Specifications

Approvals	CRN (Canada) – Steam and HVAC liquids only.
Fan	Three blade aluminum, steel spider and hub with 5/8" bore.
Fan Guard	Two piece design with close wire spacing. 3/8" diameter probe will not enter. Epoxy coated to match cabinet color.
Mounting Holes	9/16" diameter holes, two at top and two at bottom of heater.
Cabinet Material & Nozzle	14-gauge (0.075") epoxy coated steel.
Motors	CSA and/or UL listed 1725 RPM permanently lubricated ball bearing type with rigid base. Explosion-proof or general purpose construction. All 50 and 60 hertz standard voltages are available.
Louvre Blades	Anodized extruded aluminum.
Header Material	3/16" (0.187") carbon steel.
Fluid Connections	1 1/2” or 2” NPT Male or 1 1/2” or 2” 300# RF Flanges.
Max. Operating Press.	450 psi
Max. Operating Temp.	650°F
Finned Tubes	5/8" outside diameter (16-gauge, 0.065" wall thickness) carbon steel tubes. Tension wound aluminum fins @ 10 fins per inch, or 1" outside diameter (14-gauge, 0.083" wall thickness) carbon steel tubes. Extruded aluminum fins @ 9 fins per inch or 1" outside diameter (10-gauge, 0.135" wall thickness) carbon steel tubes. Extruded aluminum fins @ 5 fins per inch.

AH Series – Model Specifications

BASE MODEL	AIR DELIVERY*	AIR THROW AT 15 PSI STREAM	MOTOR† REQUIREMENTS	TUBE PASSES	NET WEIGHT‡	SHIPPING WEIGHT‡	AIR VELOCITY (FT/MIN)	MAX. MOUNTING HEIGHT
AH-12A-A_	1150 CFM	28' (8.5 m)	1/2 HP	1 or 3	102 lbs.	146 lbs.	1441	12’
AH-12A-B_	1160 CFM	28' (8.5m)	1/2 HP	1 or 3	107 lbs.	151 lbs.	1454	12’
AH-12A-C1	1030 CFM	28' (8.5m)	1/2 HP	1	118 lbs.	164 lbs.	1291	12’
AH-16A-A_	1840 CFM	40' (12.2m)	1/2 HP	1, 3 or 5	127 lbs.	174 lbs.	1301	16’
AH-16A-B_	1780 CFM	40' (12.2m)	1/2 HP	1, 3 or 5	138 lbs.	177 lbs.	1259	16’
AH-16A-C1	1840 CFM	40' (12.2m)	1/2 HP	1	153 lbs.	199 lbs.	1301	16’
AH-20A-A_	2930 CFM	40' (12.2m)	1/2 HP	1, 3 or 5	155 lbs.	209 lbs.	1499	18’
AH-20A-B_	2700 CFM	40' (12.2m)	1/2 HP	1, 3 or 5	170 lbs.	209 lbs.	1382	18’
AH-20A-C1	3000 CFM	40' (12.2m)	1/2 HP	1	195 lbs.	242 lbs.	1535	18’
AH-24A-A_	3890 CFM	40' (12.2m)	1/2 HP	1, 3, 5 or 7	189 lbs.	247 lbs.	1288	20’
AH-24A-B_	3640 CFM	40' (12.2m)	1/2 HP	1, 3, 5 or 7	212 lbs.	251 lbs.	1205	20’
AH-24A-C1	3490 CFM	40' (12.2m)	1/2 HP	1	258 lbs.	293 lbs.	1115	20’
AH-24B-A_	7650 CFM	65' (19.8m)	2½ HP	1, 3, 5 or 7	313 lbs.	361 lbs.		20’
AH-24B-B_	7420 CFM	65' (19.8m)	2½ HP	1, 3, 5 or 7	376 lbs.	424 lbs.		20’
AH-24B-C1	6690 CFM	65' (19.8m)	2½ HP	1	440 lbs.	488 lbs.		20’

See page 59 for model coding.

* at 70°F at sea level.

† CCI Thermal reserves the right to substitute motors of higher horsepower.

‡ Add 12 lbs. to flanged units.

AV Series – Model Specifications

BASE MODEL	AIR DELIVERY*	AIR THROW AT 15 PSI STREAM	MOTOR† REQUIREMENTS	TUBE PASSES	NET WEIGHT‡	SHIPPING WEIGHT‡	AIR VELOCITY (FT/MIN)	MAX. MOUNTING HEIGHT
AV-12A-A_	1150 CFM	28' (8.5 m)	1/2 HP	1 or 3	102 lbs.	146 lbs.	1441	12’
AV-12A-B_	1160 CFM	28' (8.5m)	1/2 HP	1 or 3	107 lbs.	151 lbs.	1454	12’
AV-12A-C1	1030 CFM	28' (8.5m)	1/2 HP	1	118 lbs.	164 lbs.	1291	12’
AV-16A-A_	1840 CFM	40' (12.2m)	1/2 HP	1, 3 or 5	127 lbs.	174 lbs.	1301	16’
AV-16A-B_	1780 CFM	40' (12.2m)	1/2 HP	1, 3 or 5	138 lbs.	177 lbs.	1259	16’
AV-16A-C1	1840 CFM	40' (12.2m)	1/2 HP	1	153 lbs.	199 lbs.	1301	16’
AV-20A-A_	2930 CFM	40' (12.2m)	1/2 HP	1, 3 or 5	155 lbs.	209 lbs.	1499	18’
AV-20A-B_	2700 CFM	40' (12.2m)	1/2 HP	1, 3 or 5	170 lbs.	209 lbs.	1382	18’
AV-20A-C1	3000 CFM	40' (12.2m)	1/2 HP	1	195 lbs.	242 lbs.	1535	18’
AV-24A-A_	3890 CFM	40' (12.2m)	1/2 HP	1, 3, 5 or 7	189 lbs.	247 lbs.	1288	20’
AV-24A-B_	3640 CFM	40' (12.2m)	1/2 HP	1, 3, 5 or 7	212 lbs.	251 lbs.	1205	20’
AV-24A-C1	3490 CFM	40' (12.2m)	1/2 HP	1	258 lbs.	293 lbs.	1115	20’

See page 69 for model coding.

* at 70°F at sea level.

† CCI Thermal reserves the right to substitute motors of higher horsepower.

‡ Add 12 lbs. to flanged units.

AH Physical Dimensions

DIM.		AH-12A	AH-16A	AH-20A	AH-24A
A	in.	15 13/16	19 13/16	23 13/16	27 7/8
	mm.	401	503	605	707
B	in.	19 7/16	23 1/2	27 1/2	31 1/2
	mm.	494	596	698	800
C	in.	4 3/16	4 3/16	4 3/16	4 3/16
	mm.	107	107	107	107
D	in.	7 15/16	7 9/16	7 3/16	6 7/8
	mm.	201	192	183	174
E	in.	23 5/8	23 5/8	23 5/8	23 5/8
	mm.	600	600	600	600
F	in.	18 3/16	22 3/16	26 3/16	30 3/16
	mm.	462	564	665	766
G	in.	9/16	9/16	9/16	9/16
	mm.	14.3	14.3	14.3	14.3
H	in.	23 7/8	27 7/8	31 7/8	35 7/8
	mm.	606.5	708.5	809.5	911.5
I	in.	1 9/16	1 9/16	1 9/16	1 9/16
	mm.	39	39	39	39
J	in.	5/8	5/8	5/8	5/8
	mm.	16	16	16	16

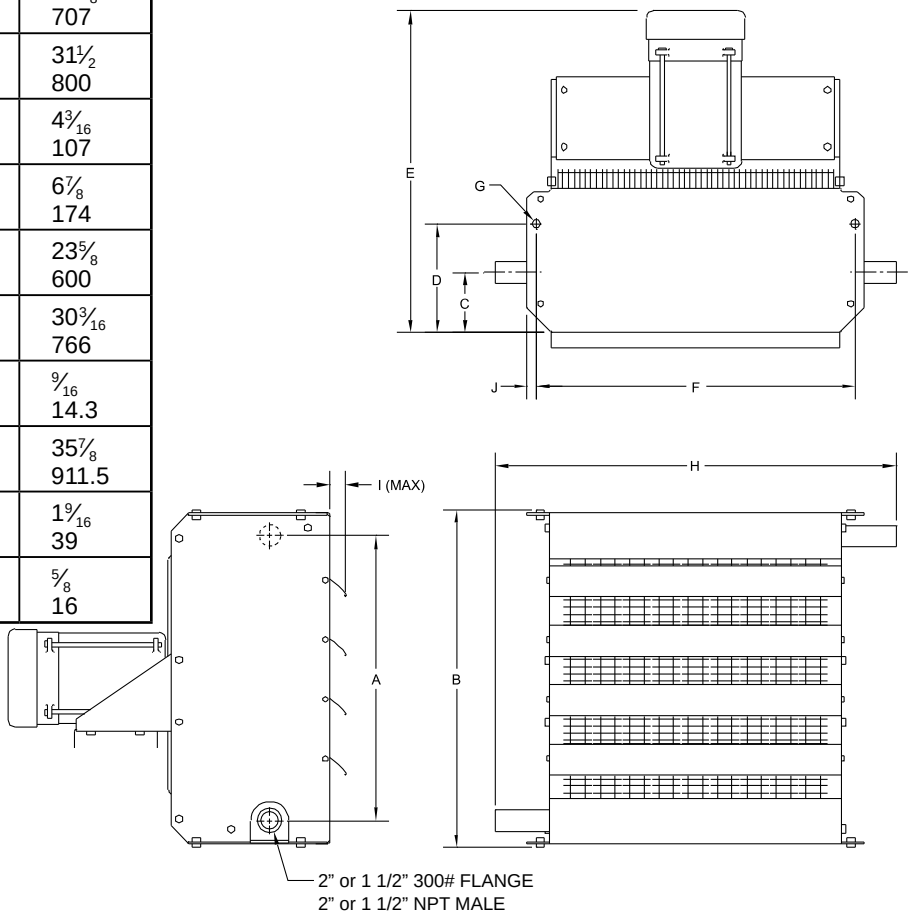

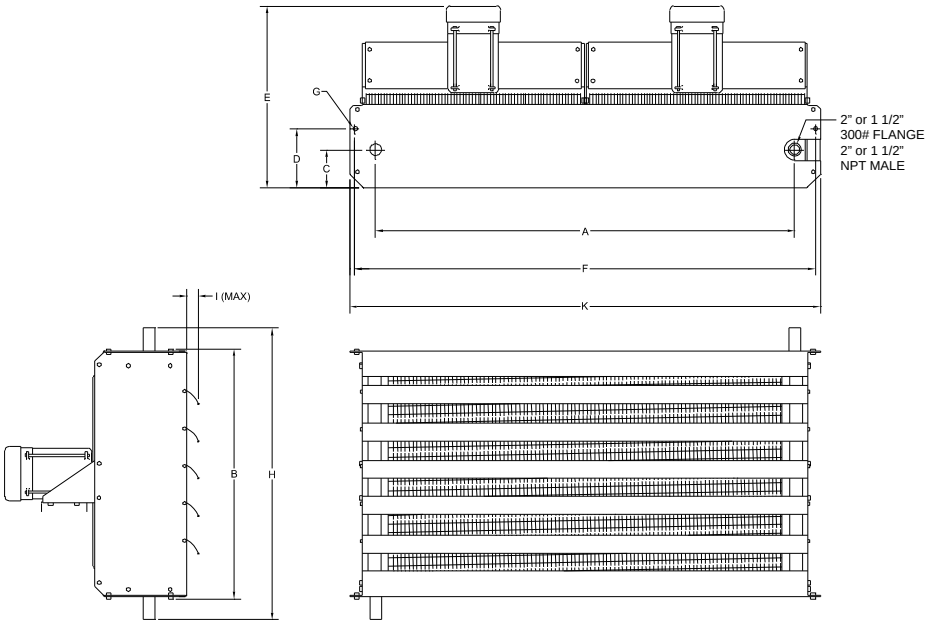

DIM.		AH-24B TANDEM
A	in.	52 1/2
	mm.	1345
B	in.	31 1/2
	mm.	800
C	in.	4 13/16
	mm.	122
D	in.	7 7/16
	mm.	189
E	in.	24 3/16
	mm.	615
F	in.	58 1/4
	mm.	1480
G	in.	9/16
	mm.	14.3
H	in.	36 7/8
	mm.	937
I	in.	2 1/16
	mm.	53
J	in.	5/8
	mm.	16
K	in.	59 1/2
	mm.	1512

AV Physical Dimensions

DIM.		AV-12A	AV-16A	AV-20A	AV-24A
A	in.	15 13/16	19 13/16	23 13/16	27 7/8
	mm.	401	503	605	707
B	in.	19 7/16	23 1/2	27 1/2	31 1/2
	mm.	494	596	698	800
C	in.	4 3/16	4 3/16	4 3/16	4 3/16
	mm.	107	107	107	107
D	in.	7 15/16	7 9/16	7 3/16	6 7/8
	mm.	201	192	183	174
E	in.	23 5/8	23 5/8	23 5/8	23 5/8
	mm.	600	600	600	600
F	in.	18 3/16	22 3/16	26 3/16	30 3/16
	mm.	462	564	665	766
G	in.	9/16	9/16	9/16	9/16
	mm.	14.3	14.3	14.3	14.3
H	in.	23 7/8	27 7/8	31 7/8	35 7/8
	mm.	606.5	708.5	809.5	911.5
I	in.	1 9/16	1 9/16	1 9/16	1 9/16
	mm.	39	39	39	39
J	in.	5/8	5/8	5/8	5/8
	mm.	16	16	16	16
K	in.	11 13/16	11 13/16	15 11/16	15 11/16
	mm.	300	300	398	398
L	in.	4 15/16	4 15/16	4 15/16	4 15/16
	mm.	122	122	122	122

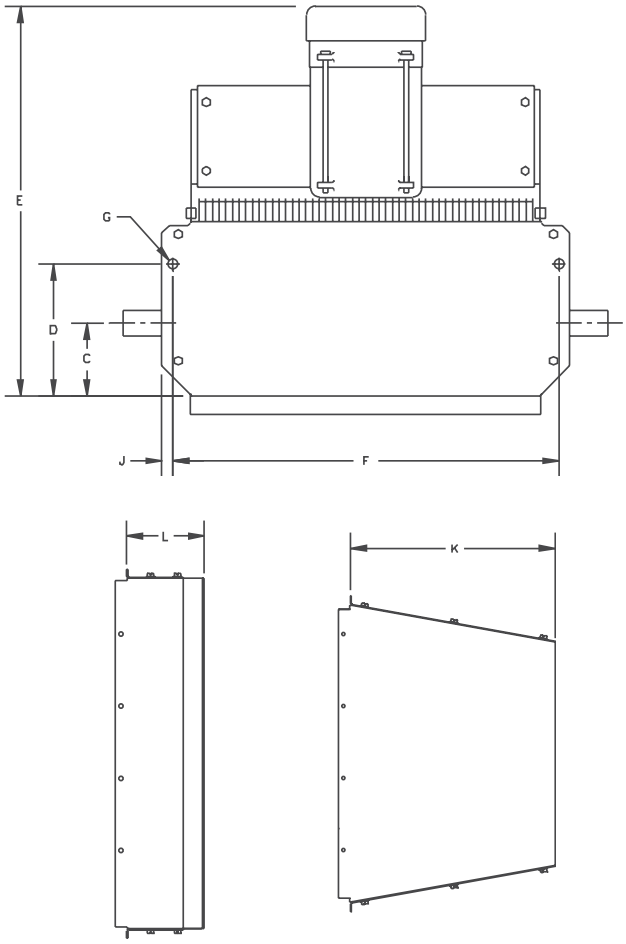

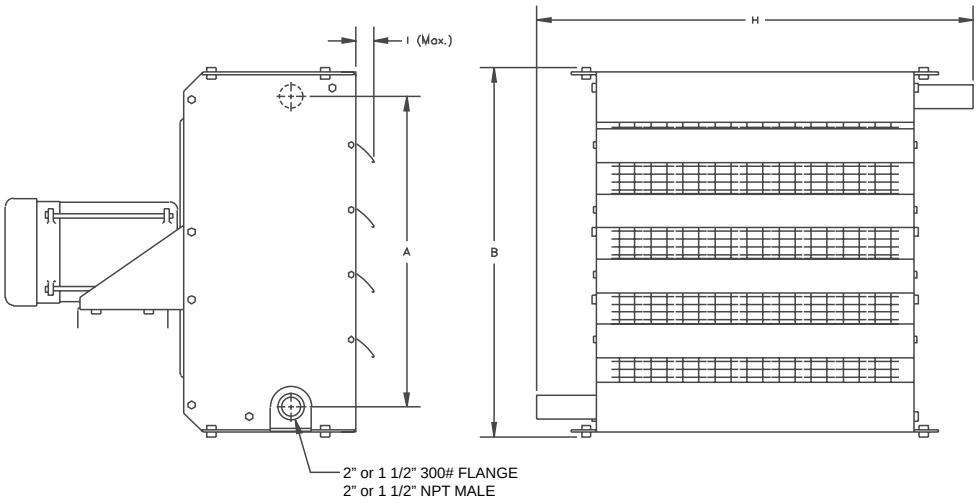

Model Coding

BASE MODEL

SERIES	FAN	HEAT EXCHANGER				CABINET		MOTOR	
AH	- 12A	- A	1	A	1	- A	1	- 1	A

SERIES	
Horizontal	**AH**
Vertical	**AV**

FAN		
12"	**12A**	
16"	**16A**	
20"	**20A**	
24"	**24A**	
24" tandem	**24B**	⑥

A = Standard single fan
B = Standard dual fan

FINNED TUBING						
TUBING	WALL THICKNESS	ROWS	FINNING			
			FINS/ INCH	MATERIAL	TYPE	
5/8"	.065"	3	10	AL	TW	**A**
1"	.083"	2	9	AL	EX	**B**
1"	.135"	2	5	AL	EX	**C**

TW = Tension Wound
EX = Extruded AL = Aluminum

TUBESIDE PASSES		
1 Pass	**1**	
3 Passes	**3**	
5 Passes	**5**	⑧
7 Passes	**7**	⑨

CONNECTIONS	
1½" NPT Male Sch. 40	**A**
1½" 300# RF flange	**B**
2" NPT Male Sch. 80	**C**
2" 300# RF flange	**D**

EXCHANGER COATINGS		
Heat resistant aluminum paint	**1**	
Heresite® phenolic coating	**2**	①

④ MOTOR ELECTRICAL SPECIFICATIONS	VOLTS	PHASE	HERTZ
A	115	1	60
⑤ **B**	208	1	60
⑤ **C**	208	3	60
D	230	1	60
E	230	3	60
③ **F**	460	1	60
G	460	3	60
H	575	3	60
I	220	1	50
J	380	3	50
③ **K**	440	3	50

MOTOR ENCLOSURE	
1	Totally enclosed
⑦ **2**	X-proof, groups C, D, E, F, & G

DISCHARGE TYPE	
1	2-way aluminum louvres
2	Nozzle
3	4-way aluminum louvres

CABINET MATERIAL	
A	Epoxy powder coated carbon steel
①,② **B**	Heresite® phenolic coated carbon steel

Note: CCI units utilize a standard motor. Specifying any other O.E.M Motor may result in longer lead times.

① Heresite® coated exchangers and cabinets: contact factory for quote.
② Louvres and fan blades are also Heresite® coated.
③ Contact factory for shipping lead time.
④ Motor designed to be used at rated voltage with tolerances of ±15%.
⑤ Motor may be marked 230 volts, but is suitable for 208 volt operation.
⑥ Tandem configuration not available on AV models.
⑦ 460 1 phase motors are only certified for groups D, F & G
⑧ Only available in 16" and larger units
⑨ Only available in 24" and larger units

5/8" Tension-Wound Finned Tubing (10 fins/inch) — AH-16A-A1 Single Pass



Operating Pressure		Entering Air Temperature (°F) –10	0	20	40	60	70	80
2	OUTPUT (MBH)	194.3	184.5	165.3	146.7	128.6	119.7	111.0
	COND. (lbs./hr.)	199.0	188.9	169.3	150.2	131.7	122.6	113.7
	FAT (°F)	75.9	83.0	97.0	110.6	123.8	130.4	138.8
50	OUTPUT (MBH)	267.6	257.0	236.4	216.4	197.0	187.6	17802
	COND. (lbs./hr.)	290.0	278.6	256.2	234.5	213.5	203.2	193.0
	FAT (°F)	109.2	116.6	131.0	145.0	158.6	165.3	171.9
100	OUTPUT (MBH)	305.0	294.0	272.7	252.1	232.1	222.3	212.7
	COND. (lbs./hr.)	341.7	329.4	305.5	282.3	259.9	248.9	283.1
	FAT (°F)	126.4	133.9	148.5	162.8	176.6	183.4	190.1
200	OUTPUT (MBH)	351.5	340.2	318.0	296.6	275.9	265.7	255.7
	COND. (lbs./hr.)	412.6	399.2	373.2	348.0	323.6	311.6	299.9
	FAT (°F)	148.0	155.6	170.6	185.1	199.3	206.2	213.0

1" Extruded Finned Tubing (9 fins/inch) — AH-16A-B1 Single Pass



Operating Pressure		Entering Air Temperature (°F) –10	0	20	40	60	70	80
2	OUTPUT (MBH)	182.5	173.3	155.2	137.7	120.7	112.4	104.2
	COND. (lbs./hr.)	186.8	177.4	158.9	141.0	123.5	115.0	106.6
	FAT (°F)	73.2	80.4	94.5	108.3	121.8	128.4	135.0
50	OUTPUT (MBH)	251.5	241.5	222.1	203.3	185.0	176.1	167.3
	COND. (lbs./hr.)	272.4	261.6	240.5	220.1	200.3	190.6	181.1
	FAT (°F)	105.4	112.8	127.4	141.6	155.4	162.2	168.9
100	OUTPUT (MBH)	286.7	276.4	256.3	236.9	218.0	208.8	199.8
	COND. (lbs./hr.)	321.0	309.4	286.9	265.1	243.9	233.6	233.4
	FAT (°F)	122.0	129.6	144.4	158.8	172.8	179.7	186.5
200	OUTPUT (MBH)	330.6	319.9	299.0	278.8	259.2	249.7	240.3
	COND. (lbs./hr.)	387.7	375.1	350.5	326.8	303.8	292.6	281.5
	FAT (°F)	142.9	150.6	165.6	180.3	194.7	201.7	208.6

1" Extruded Finned Tubing (5 fins/inch) — AH-16A-C1 Single Pass



Operating Pressure		Entering Air Temperature (°F) –10	0	20	40	60	70	80
2	OUTPUT (MBH)	146.4	139.1	124.7	110.8	97.2	90.6	84.0
	COND. (lbs./hr.)	149.5	142.0	127.3	113.1	99.2	92.4	85.7
	FAT (°F)	54.1	61.9	77.5	92.8	107.8	115.3	122.6
50	OUTPUT (MBH)	201.4	193.5	178.2	163.3	148.8	141.7	134.7
	COND. (lbs./hr.)	217.4	208.9	192.3	176.2	160.6	152.9	145.4
	FAT (°F)	78.5	86.6	102.5	118.2	133.6	141.1	148.7
100	OUTPUT (MBH)	229.5	221.4	205.5	190.2	175.3	168.0	160.8
	COND. (lbs./hr.)	256.0	247.0	229.3	212.1	195.5	187.3	179.3
	FAT (°F)	91.1	99.3	115.4	131.3	146.8	154.5	162.1
200	OUTPUT (MBH)	264.5	256.1	239.7	223.8	208.4	200.8	193.4
	COND. (lbs./hr.)	309.1	299.2	280.0	261.3	243.3	234.4	225.7
	FAT (°F)	106.9	115.2	131.6	147.7	163.5	171.3	179.0

For 50 Hz power supply, derate output by 10%. For model coding, refer to page 69. Above figures are based on calculations att sea level.
COND. = Condensate Flow. **FAT** = Final Air Temperature.

5/8" Tension-wound Finned Tubing (10 fins/inch) — AH-12A-A1 Single Pass



Operating Pressure		Entering Air Temperature (°F) –10	0	20	40	60	70	80
2	OUTPUT (MBH)	117.6	111.6	100.1	88.8	77.9	72.5	67.3
	COND. (lbs./hr.)	120.1	114.0	102.2	90.7	79.5	74.1	68.7
	FAT (°F)	72.9	80.2	94.4	108.2	121.7	128.4	134.9
50	OUTPUT (MBH)	162.0	155.7	143.2	131.2	119.5	113.7	108.1
	COND. (lbs./hr.)	175.1	168.2	154.7	141.7	129.0	122.8	116.7
	FAT (°F)	105.2	112.6	127.2	141.5	155.4	162.2	168.9
100	OUTPUT (MBH)	184.7	178.1	165.3	152.8	140.8	134.9	129.0
	COND. (lbs./hr.)	206.3	198.9	184.5	170.6	157.1	150.5	143.9
	FAT (°F)	121.8	129.4	144.2	158.7	172.8	179.7	186.5
200	OUTPUT (MBH)	213.0	206.2	192.8	179.9	167.4	161.2	155.2
	COND. (lbs./hr.)	249.1	241.1	225.4	210.3	195.6	188.4	181.3
	FAT (°F)	142.6	150.4	165.5	180.3	194.7	201.7	208.7

1" Extruded Finned Tubing (9 fins/inch) — AH-12A-B1 Single Pass



Operating Pressure		Entering Air Temperature (°F) –10	0	20	40	60	70	80
2	OUTPUT (MBH)	110.0	104.5	93.7	83.2	73.0	68.0	63.0
	COND. (lbs./hr.)	112.2	160.6	95.6	84.9	74.5	69.4	64.3
	FAT (°F)	66.9	74.3	88.9	103.2	117.2	124.1	130.9
50	OUTPUT (MBH)	151.7	145.8	134.2	123.0	112.0	106.7	101.4
	COND. (lbs./hr.)	163.8	157.8	144.8	132.7	120.9	115.1	109.4
	FAT (°F)	96.8	104.4	119.4	134.1	148.4	155.4	162.4
100	OUTPUT (MBH)	173.1	166.9	155.0	143.4	132.1	126.6	121.1
	COND. (lbs./hr.)	193.1	186.2	172.8	159.8	147.2	141.1	135.0
	FAT (°F)	112.2	119.9	135.1	150.0	164.5	171.7	178.7
200	OUTPUT (MBH)	199.7	193.3	180.9	168.8	157.1	151.4	145.8
	COND. (lbs./hr.)	233.3	225.8	211.2	197.1	183.4	176.7	170.1
	FAT (°F)	131.5	139.4	154.9	170.1	184.8	192.1	199.3

1" Extruded Finned Tubing (5 fins/inch) — AH-12A-C1 Single Pass



Operating Pressure		Entering Air Temperature (°F) –10	0	20	40	60	70	80
2	OUTPUT (MBH)	88.2	83.8	75.1	66.7	58.5	54.5	50.5
	COND. (lbs./hr.)	89.7	85.1	76.3	67.8	59.4	55.4	51.3
	FAT (°F)	59.1	66.8	82.0	96.9	111.5	118.7	125.9
50	OUTPUT (MBH)	121.4	116.7	107.4	98.4	89.6	85.3	81.1
	COND. (lbs./hr.)	130.5	125.4	115.4	105.7	96.3	91.7	87.7
	FAT (°F)	85.6	93.5	109.1	124.3	139.3	146.7	154.0
100	OUTPUT (MBH)	138.4	133.5	123.9	114.6	105.6	101.2	96.9
	COND. (lbs./hr.)	153.7	148.3	137.6	127.2	117.2	112.3	107.4
	FAT (°F)	99.2	107.3	123.0	138.5	153.7	161.1	168.5
200	OUTPUT (MBH)	159.6	154.5	144.6	135.0	125.6	121.1	116.6
	COND. (lbs./hr.)	185.6	179.7	168.1	156.8	145.9	140.6	135.6
	FAT (°F)	116.3	124.5	140.6	156.3	171.7	179.3	186.8

For 50 Hz power supply, derate output by 10%. For model coding, refer to page 69. Above figures are based on calculations att sea level.
COND. = Condensate Flow. **FAT** = Final Air Temperature.

5/8" Tension-Wound Finned Tubing (10 fins/inch) — AH-20A-A1 Single Pass



Operating Pressure		Entering Air Temperature (°F) –10	0	20	40	60	70	80
2	OUTPUT (MBH)	285.6	271.2	243.1	215.9	189.3	176.3	163.5
	COND. (lbs./hr.)	293.0	278.3	249.5	221.5	194.2	180.9	167.7
	FAT (°F)	69.4	76.8	91.3	105.4	119.2	126.0	132.7
50	OUTPUT (MBH)	392.5	377.1	347.0	317.9	289.5	275.7	262.0
	COND. (lbs./hr.)	426.3	409.5	376.8	345.1	314.3	299.2	284.4
	FAT (°F)	100.0	107.6	122.5	137.0	151.2	158.2	165.1
100	OUTPUT (MBH)	447.1	431.2	400.1	370.0	340.8	326.6	312.5
	COND. (lbs./hr.)	501.9	484.0	449.1	415.3	382.5	366.4	350.6
	FAT (°F)	115.8	123.5	138.6	153.4	167.8	174.8	181.8
200	OUTPUT (MBH)	514.9	498.4	466.2	435.0	404.8	390.0	375.4
	COND. (lbs./hr.)	605.8	586.3	548.3	511.5	475.9	458.5	441.3
	FAT (°F)	135.5	143.4	158.8	173.9	188.6	195.8	202.9

1" Extruded Finned Tubing (9 fins/inch) — AH-20A-B1 Single Pass



Operating Pressure		Entering Air Temperature (°F) –10	0	20	40	60	70	80
2	OUTPUT (MBH)	283.4	269.0	240.8	213.5	187.1	174.1	161.4
	COND. (lbs./hr.)	209.8	276.0	247.1	219.1	191.9	178.6	165.6
	FAT (°F)	74.8	81.9	96.0	109.7	123.0	129.6	136.1
50	OUTPUT (MBH)	390.6	375.0	344.6	315.2	286.8	272.9	259.2
	COND. (lbs./hr.)	424.1	407.2	374.1	342.2	311.3	296.2	281.3
	FAT (°F)	107.6	115.0	129.4	143.5	157.3	164.0	170.6
100	OUTPUT (MBH)	445.3	429.2	397.7	367.3	337.9	323.6	309.4
	COND. (lbs./hr.)	499.9	481.7	446.4	412.2	379.2	363.0	347.2
	FAT (°F)	124.5	132.0	146.7	161.0	175.0	181.8	188.6
200	OUTPUT (MBH)	513.5	496.7	464.0	432.4	401.8	386.9	372.2
	COND. (lbs./hr.)	604.1	584.2	545.6	508.4	472.3	454.8	437.5
	FAT (°F)	145.7	153.4	168.4	183.0	197.2	204.2	211.1

1" Extruded Finned Tubing (5 fins/inch) — AH-20A-C1 Single Pass



Operating Pressure		Entering Air Temperature (°F) –10	0	20	40	60	70	80
2	OUTPUT (MBH)	224.9	213.6	191.7	170.3	149.5	139.3	129.2
	COND. (lbs./hr.)	230.2	218.7	196.2	174.3	153.0	142.5	132.2
	FAT (°F)	50.6	58.6	74.4	90.0	105.3	112.9	120.4
50	OUTPUT (MBH)	309.2	297.2	273.7	250.9	228.7	217.9	207.2
	COND. (lbs./hr.)	334.9	321.8	296.4	271.6	247.6	235.9	224.2
	FAT (°F)	73.7	81.9	98.1	114.0	129.7	137.4	145.0
100	OUTPUT (MBH)	352.2	339.8	315.6	292.2	269.4	258.2	247.2
	COND. (lbs./hr.)	394.3	380.4	353.3	326.9	301.4	288.9	276.5
	FAT (°F)	85.6	93.9	110.3	126.4	142.2	150.0	157.8
200	OUTPUT (MBH)	405.9	393.0	368.0	343.7	320.1	308.6	297.2
	COND. (lbs./hr.)	476.0	460.9	431.4	402.8	375.1	361.6	348.2
	FAT (°F)	100.5	108.9	125.6	141.9	158.0	165.9	173.8

For 50 Hz power supply, derate output by 10%. For model coding, refer to page 69. Above figures are based on calculations att sea level.
COND. = Condensate Flow. **FAT** = Final Air Temperature.

5/8" Tension-Wound Finned Tubing (10 fins/inch) — AH-24A-A1 Single Pass



Operating Pressure		Entering Air Temperature (°F) –10	0	20	40	60	70	80
2	OUTPUT (MBH)	390.0	370.4	332.0	294.6	258.4	240.6	223.0
	COND. (lbs./hr.)	399.6	379.4	340.0	301.8	264.6	246.4	228.4
	FAT (°F)	71.5	78.8	93.1	107.0	120.7	127.4	134.0
50	OUTPUT (MBH)	536.0	514.9	473.7	433.8	395.0	376.1	357.4
	COND. (lbs./hr.)	581.1	558.2	513.4	470.1	428.1	407.5	387.2
	FAT (°F)	102.8	110.3	125.1	139.4	153.4	160.3	167.1
100	OUTPUT (MBH)	610.5	588.7	546.2	505.0	465.0	445.4	426.2
	COND. (lbs./hr.)	684.1	659.6	611.8	565.6	520.8	498.9	477.3
	FAT (°F)	119.0	126.6	141.6	156.2	170.4	177.4	184.3
200	OUTPUT (MBH)	703.1	680.5	636.4	593.7	552.3	532.1	512.1
	COND. (lbs./hr.)	825.5	798.8	746.9	696.6	647.9	624.1	600.7
	FAT (°F)	139.2	147.0	162.3	177.2	191.7	198.8	205.9

1" Extruded Finned Tubing (9 fins/inch) — AH-24A-B1 Single Pass



Operating Pressure		Entering Air Temperature (°F) –10	0	20	40	60	70	80
2	OUTPUT (MBH)	353.9	336.0	300.9	266.9	233.9	217.8	202.8
	COND. (lbs./hr.)	362.2	343.8	307.9	273.1	239.3	222.8	206.5
	FAT (°F)	68.4	75.7	90.3	104.5	118.3	125.2	131.9
50	OUTPUT (MBH)	486.6	467.3	429.6	393.2	357.9	340.6	323.6
	COND. (lbs./hr.)	526.9	505.9	465.1	425.6	387.3	368.6	350.1
	FAT (°F)	98.4	106.0	120.9	135.5	149.8	156.8	163.7
100	OUTPUT (MBH)	554.4	534.4	495.5	457.9	421.4	403.6	386.1
	COND. (lbs./hr.)	620.5	598.0	554.4	512.2	471.3	451.4	431.7
	FAT (°F)	113.8	121.5	136.7	151.5	166.0	173.1	180.1
200	OUTPUT (MBH)	638.9	618.1	577.7	538.6	500.8	482.3	464.2
	COND. (lbs./hr.)	749.0	724.6	677.0	631.1	586.7	565.0	543.6
	FAT (°F)	133.2	141.1	156.5	171.6	186.4	193.6	200.8

1" Extruded Finned Tubing (5 fins/inch) — AH-24A-C1 Single Pass



Operating Pressure		Entering Air Temperature (°F) –10	0	20	40	60	70	80
2	OUTPUT (MBH)	290.8	276.2	247.6	219.9	192.9	179.6	166.6
	COND. (lbs./hr.)	296.9	281.9	252.7	224.4	196.8	183.3	170.0
	FAT (°F)	57.2	65.0	80.3	95.3	110.1	117.4	124.6
50	OUTPUT (MBH)	399.3	383.6	353.1	323.4	294.7	280.6	266.7
	COND. (lbs./hr.)	431.1	414.1	381.1	349.1	318.0	302.8	287.7
	FAT (°F)	82.7	90.7	106.4	121.8	136.9	144.4	151.8
100	OUTPUT (MBH)	454.6	438.5	407.0	376.5	346.9	332.4	318.1
	COND. (lbs./hr.)	507.3	489.2	453.9	419.8	386.7	370.5	354.6
	FAT (°F)	95.9	103.9	119.9	135.5	150.8	158.3	165.8
200	OUTPUT (MBH)	523.6	506.9	474.2	442.7	412.0	397.0	382.3
	COND. (lbs./hr.)	611.9	592.3	554.0	516.9	481.0	463.5	446.2
	FAT (°F)	112.3	120.5	136.7	152.6	168.1	175.8	183.4

For 50 Hz power supply, derate output by 10%. For model coding, refer to page 69. Above figures are based on calculations att sea level.
COND. = Condensate Flow. **FAT** = Final Air Temperature.

5/8" Tension-Wound Finned Tubing (10 fins/inch) — AH-24B-A1 Single Pass



Operating Pressure		Entering Air Temperature (°F) –10	0	20	40	60	70	80
2	OUTPUT (MBH)	694.1	659.3	591.1	524.8	460.4	428.8	397.6
	COND. (lbs./hr.)	713.3	677.5	607.4	539.3	473.1	440.6	408.5
	FAT (°F)	63.8	71.3	86.2	100.8	115.0	122.1	129.0
50	OUTPUT (MBH)	951.4	914.1	841.3	770.7	702.2	668.6	635.4
	COND. (lbs./hr.)	1035.0	994.4	915.2	838.3	763.7	727.1	691.0
	FAT (°F)	91.9	99.7	114.9	129.9	144.6	151.8	158.9
100	OUTPUT (MBH)	1082.5	1044.1	969.1	896.4	825.8	791.3	757.2
	COND. (lbs./hr.)	1217.6	1174.3	1089.8	1007.9	928.5	889.6	851.2
	FAT (°F)	106.3	114.2	129.7	144.9	159.8	167.1	174.3
200	OUTPUT (MBH)	1245.6	1205.7	1128.1	1052.8	979.9	944.2	909.0
	COND. (lbs./hr.)	1468.2	1421.1	1329.4	1240.5	1154.4	1112.3	1070.7
	FAT (°F)	124.4	132.5	148.3	163.8	178.9	186.4	193.7

1" Extruded Finned Tubing (9 fins/inch) — AH-24B-B1 Single Pass



Operating Pressure		Entering Air Temperature (°F) –10	0	20	40	60	70	80
2	OUTPUT (MBH)	637.6	605.5	542.8	481.8	422.6	393.6	364.9
	COND. (lbs./hr.)	654.9	621.9	557.4	494.8	434.0	404.2	374.7
	FAT (°F)	59.7	67.4	82.5	97.4	112.0	119.2	126.3
50	OUTPUT (MBH)	874.3	839.9	772.9	707.9	644.8	614.0	583.5
	COND. (lbs./hr.)	950.4	913.0	840.1	769.4	700.8	667.2	634.1
	FAT (°F)	86.2	94.1	109.6	124.8	139.8	147.1	154.4
100	OUTPUT (MBH)	994.9	959.5	890.4	823.5	758.5	726.8	695.5
	COND. (lbs./hr.)	1118.2	1078.3	1000.5	925.2	852.2	816.4	781.2
	FAT (°F)	99.8	107.8	123.5	139.0	154.1	161.6	169.0
200	OUTPUT (MBH)	1147.2	1108.4	1036.8	967.5	900.3	867.5	835.1
	COND. (lbs./hr.)	1348.7	1305.3	1220.8	1139.0	1059.8	1021.1	982.9
	FAT (°F)	116.8	125.0	141.0	156.7	172.1	179.7	187.2

1" Extruded Finned Tubing (5 fins/inch) — AH-24B-C1 Single Pass



Operating Pressure		Entering Air Temperature (°F) –10	0	20	40	60	70	80
2	OUTPUT (MBH)	499.4	474.3	425.3	377.7	331.4	308.7	286.3
	COND. (lbs./hr.)	511.8	486.1	435.8	387.1	339.6	316.3	293.4
	FAT (°F)	50.3	58.3	74.1	89.7	105.5	112.6	120.1
50	OUTPUT (MBH)	683.6	656.8	604.7	554.1	504.9	480.9	457.1
	COND. (lbs./hr.)	741.3	712.2	655.6	600.7	547.4	521.2	495.5
	FAT (°F)	73.0	81.2	97.4	113.3	128.9	136.7	144.4
100	OUTPUT (MBH)	777.5	750.5	696.3	644.2	593.7	569.0	544.6
	COND. (lbs./hr.)	871.5	840.6	780.3	721.9	665.2	637.4	610.1
	FAT (°F)	84.6	92.9	109.3	125.4	141.3	149.1	156.9
200	OUTPUT (MBH)	894.4	865.9	810.4	756.6	704.4	678.9	653.8
	COND. (lbs./hr.)	1050.4	1016.9	951.5	888.1	826.8	796.7	767.1
	FAT (°F)	99.1	107.6	124.2	140.6	156.7	164.6	172.5

For 50 Hz power supply, derate output by 10%. For model coding, refer to page 69. Above figures are based on calculations att sea level.
COND. = Condensate Flow. **FAT** = Final Air Temperature.

5/8" Tension-Wound Finned Tubing (10 fins/inch)

50% Ethylene Glycol – 60°F EAT

		ENTERING GLYCOL TEMPERATURE											
		180°F				200°F				220°F			
MODEL	ΔT F°	OUTPUT MBH	FLOW USGPM	FAT °F	PD PSI	OUTPUT MBH	FLOW USGPM	FAT °F	PD PSI	OUTPUT MBH	FLOW USGPM	FAT °F	PD PSI
AH-12A-A1* *One pass*	10	17.6	3.69	73.3	0.00	21.5	4.45	76.3	0.00	33.6	6.95	85.8	0.01
	20	13.0	1.35	69.7	0.00	16.1	1.65	72.0	0.00	19.3	1.95	74.4	0.00
	40	8.9	0.45	66.4	0.00	11.2	0.56	68.1	0.00	13.6	0.68	69.9	0.00
AH-12A-A3 *Three pass*	10	43.0	9.26	93.7	0.31	56.5	12.0	104.5	0.52	68.1	14.3	113.7	0.73
	20	19.0	2.00	74.4	0.02	34.0	3.59	86.3	0.05	48.8	5.12	98.1	0.10
	40	13.3	0.69	69.9	0.00	16.7	0.86	72.5	0.00	20.4	1.04	75.3	0.01
AH-16A-A1* *One pass*	10	32.1	6.82	75.4	0.01	54.3	11.5	86.4	0.01	80.0	16.8	99.2	0.03
	20	24.0	2.53	71.4	0.00	29.6	3.09	74.1	0.00	35.4	3.65	76.9	0.00
	40	15.8	0.82	67.3	0.00	20.7	1.06	69.6	0.00	25.1	1.28	71.7	0.00
AH-16A-A3 *Three pass*	10	80.3	17.4	99.5	0.74	99.2	21.2	109.0	1.08	118.1	24.9	118.5	1.48
	20	48.6	5.23	83.6	0.08	72.5	7.73	95.5	0.16	97.3	10.3	107.9	0.27
	40	24.3	1.29	71.5	0.01	30.6	1.61	74.6	0.01	37.2	1.93	77.7	0.01
AH-16A-A5 *Five pass*	10	88.0	19.1	103.4	3.96	106.7	22.8	112.8	5.60	125.3	26.5	122.2	7.46
	20	69.0	7.46	93.8	0.65	90.9	9.73	104.8	1.08	109.9	11.6	114.3	1.52
	40	28.6	1.53	73.7	0.03	49.5	2.63	84.0	0.09	74.5	3.94	96.4	0.19
AH-20A-A1* *One pass*	10	61.1	13.1	78.7	0.01	101.6	21.7	91.3	0.03	134.4	28.4	101.6	0.05
	20	40.7	4.34	72.3	0.00	50.1	5.28	75.2	0.00	59.9	6.24	78.1	0.00
	40	25.0	1.32	67.4	0.00	35.0	1.83	70.4	0.00	43.1	2.23	72.9	0.00
AH-20A-A3 *Three pass*	10	123.0	26.7	98.2	1.09	150.4	32.2	106.8	1.56	177.7	37.6	115.5	3.09
	20	86.9	9.41	86.8	0.15	118.5	12.7	96.7	0.26	151.7	16.07	107.2	0.41
	40	40.8	2.19	72.3	0.01	51.3	2.72	75.5	0.02	79.8	4.21	84.4	0.03
AH-20A-A5 *Five pass*	10	132.3	28.7	101.2	5.58	159.4	34.2	109.7	7.77	186.4	39.5	118.2	10.3
	20	111.6	12.1	94.6	1.07	139.3	14.9	103.3	1.59	166.8	17.7	112.0	2.18
	40	49.4	2.66	75.0	0.06	91.1	4.89	88.0	0.19	123.6	6.57	98.2	0.33
AH-24A-A1* *One pass*	10	110.2	23.7	85.4	0.03	156.3	33.3	96.3	0.06	205.1	43.2	107.8	0.09
	20	60.0	6.37	73.6	0.00	73.8	7.75	76.7	0.00	87.7	9.01	79.9	0.01
	40	35.1	1.83	67.8	0.00	49.2	2.56	71.0	0.00	64.0	3.30	74.3	0.00
AH-24A-A3 *Three pass*	10	173.0	37.4	100.4	1.68	210.1	44.9	109.1	2.37	247.1	52.2	117.9	3.15
	20	131.7	14.2	90.5	0.27	177.5	19.0	101.3	0.46	215.4	22.8	110.3	0.64
	40	59.8	3.20	73.6	0.02	74.0	3.91	76.8	0.03	137.5	7.26	91.7	0.08
AH-24A-A5 *Five pass*	10	183.8	39.8	103.0	8.39	220.5	47.2	111.7	11.6	—	—	—	—
	20	158.3	17.2	96.9	1.68	195.7	21.0	105.7	2.45	233.0	24.7	114.5	3.32
	40	93.2	5.04	81.4	0.17	139.6	7.48	92.3	0.35	187.1	9.94	103.5	0.59
AH-24A-A7 *Seven pass*	10	—	—	—	—	—	—	—	—	—	—	—	—
	20	167.2	18.1	99.0	4.98	204.3	21.9	107.8	7.09	241.3	25.6	116.5	9.48
	40	118.1	6.41	87.3	0.69	163.6	8.80	98.0	1.25	201.6	10.7	107.0	1.80
AH-24B-A1* *One pass Tandem*	10	286.4	62.1	94.0	0.25	352.4	75.6	101.9	0.36	418.1	88.6	109.9	0.48
	20	173.8	18.8	80.5	0.03	260.1	27.9	90.8	0.06	335.6	35.6	99.8	0.09
	40	69.2	3.69	67.9	0.00	96.7	5.12	71.2	0.00	156.0	8.22	78.2	0.01
AH-24B-A3 *Three pass Tandem*	10	330.2	71.7	99.3	7.73	394.6	84.7	107.1	10.4	458.8	97.3	114.9	13.5
	20	290.2	31.6	94.5	1.67	355.7	38.3	102.3	2.35	420.8	44.7	110.2	3.12
	40	194.0	10.6	82.9	0.22	269.8	14.6	91.9	0.39	348.2	18.6	101.4	0.61
AH-24B-A5 *Five pass Tandem*	10	—	—	—	—	—	—	—	—	—	—	—	—
	20	308.7	33.6	96.7	8.14	373.4	40.2	104.5	11.12	437.9	46.6	112.3	14.7
	40	239.5	13.1	88.3	1.41	312.2	16.9	97.1	2.23	378.3	20.2	105.0	3.07
AH-24B-A7 *Seven pass Tandem*	10	—	—	—	—	—	—	—	—	—	—	—	—
	20	—	—	—	—	—	—	—	—	—	—	—	—
	40	261.0	14.3	90.9	4.35	326.9	17.7	98.9	6.37	392.4	21.0	106.7	8.65

* Single-pass heaters are not recommended for liquid service. In many cases, a smaller multi-pass model would be a more economical choice. For 50 Hz power supply, derate output by 10%. For complete model coding, refer to page 69. Above figures are based on calculations at sea level.

1" Extruded Finned Tubing (9 fins/inch)

50% Ethylene Glycol – 60°F EAT

		ENTERING GLYCOL TEMPERATURE											
		180°F				200°F				220°F			
MODEL	ΔT F°	OUTPUT MBH	FLOW USGPM	FAT °F	PD PSI	OUTPUT MBH	FLOW USGPM	FAT °F	PD PSI	OUTPUT MBH	FLOW USGPM	FAT °F	PD PSI
AH-12A-B1* *One pass*	10	9.1	1.83	66.6	0.00	11.2	2.22	68.0	0.00	13.3	2.61	69.6	0.00
	20	6.6	0.64	64.6	0.00	8.2	0.78	65.6	0.00	9.7	0.93	66.8	0.00
	40	4.4	0.21	62.9	0.00	5.6	0.26	63.7	0.00	6.8	0.31	64.5	0.00
AH-12A-B3 *Three pass*	10	26.7	5.68	80.4	0.05	42.0	8.88	92.4	0.11	53.1	11.1	101.2	0.17
	20	10.1	1.03	67.3	0.00	12.5	1.25	69.1	0.00	14.6	1.47	70.6	0.00
	40	6.8	0.34	64.8	0.00	8.6	0.42	66.0	0.00	10.5	0.51	67.4	0.00
AH-16A-B1* *One pass*	10	17.4	3.61	68.4	0.00	21.4	4.37	70.3	0.00	25.4	5.13	72.3	0.00
	20	12.6	1.27	65.9	0.00	15.5	1.56	67.3	0.00	18.6	1.84	68.8	0.00
	40	8.4	0.41	63.8	0.00	10.6	0.51	64.8	0.00	12.9	0.62	65.9	0.00
AH-16A-B3 *Three pass*	10	57.2	12.3	88.9	0.13	78.6	16.8	99.9	0.23	96.7	20.4	109.2	0.34
	20	19.2	2.01	69.3	0.00	32.9	3.44	76.2	0.01	59.6	6.24	89.9	0.03
	40	13.0	0.66	66.1	0.00	16.4	0.83	67.8	0.00	20.0	1.00	69.5	0.00
AH-16A-B5 *Five pass*	10	72.5	15.7	96.8	0.91	90.3	19.3	106.0	1.37	108.1	22.8	115.2	1.91
	20	44.1	4.73	82.1	0.09	68.6	7.31	94.7	0.21	86.9	9.16	104.1	0.32
	40	15.8	0.82	67.6	0.00	20.0	1.03	69.6	0.00	24.3	1.24	71.7	0.01
AH-20A-B1* *One pass*	10	29.2	6.14	69.4	0.00	36.1	7.43	71.5	0.00	80.3	16.8	86.5	0.01
	20	21.0	2.18	66.7	0.00	26.3	2.66	68.2	0.00	31.1	3.15	69.9	0.00
	40	14.0	0.71	64.3	0.00	18.0	0.88	65.4	0.00	21.5	1.06	66.6	0.00
AH-20A-B3 *Three pass*	10	102.9	22.2	94.3	0.28	130.8	28.0	103.8	0.43	158.6	33.5	113.2	0.62
	20	32.1	3.37	70.4	0.01	79.3	8.45	86.3	0.04	119.2	12.6	99.7	0.09
	40	21.7	1.13	66.9	0.00	27.5	1.42	68.7	0.00	33.4	1.71	70.6	0.00
AH-20A-B5 *Five pass*	10	118.6	25.7	99.7	1.65	146.0	31.3	109.0	2.43	173.3	36.7	118.3	3.32
	20	83.0	8.98	87.6	0.22	116.5	12.5	98.9	0.41	144.6	15.3	108.4	0.60
	40	26.4	1.39	68.5	0.01	33.4	1.74	70.7	0.01	78.1	4.12	85.7	0.05
AH-24A-B1* *One pass*	10	43.6	9.14	70.4	0.00	79.4	16.7	79.3	0.01	127.2	26.6	91.8	0.01
	20	31.9	3.29	67.5	0.00	39.4	4.02	69.2	0.00	47.2	4.76	71.1	0.00
	40	21.4	1.08	64.9	0.00	27.1	1.35	66.2	0.00	32.9	1.63	67.5	0.00
AH-24A-B3 *Three pass*	10	136.2	29.4	93.7	0.35	170.4	36.4	102.3	0.53	204.5	43.1	110.8	0.74
	20	74.3	7.94	78.1	0.03	117.7	12.5	88.9	0.07	162.3	17.1	100.1	0.12
	40	32.7	1.70	67.7	0.00	41.3	2.13	69.7	0.00	50.2	2.56	71.8	0.00
AH-24A-B5 *Five pass*	10	152.5	33.0	97.8	1.99	186.1	39.8	106.3	2.86	219.7	46.4	114.7	3.86
	20	119.9	13.0	89.6	0.33	154.3	16.5	98.2	0.52	188.7	19.9	106.8	0.75
	40	39.2	2.06	69.3	0.01	73.8	3.90	77.9	0.03	119.7	6.31	89.3	0.08
AH-24A-B7 *Seven pass*	10	160.2	34.6	99.8	5.90	193.5	41.4	108.1	8.34	226.9	47.9	116.5	11.2
	20	133.1	14.4	92.9	1.07	167.2	17.9	101.4	1.63	201.2	21.3	110.0	2.28
	40	65.9	3.53	76.0	0.07	109.4	5.84	86.8	0.19	153.1	8.11	97.8	0.35
AH-24B-B1* *One pass Tandem*	10	202.8	43.9	84.7	0.04	277.9	59.5	93.9	0.07	339.4	71.8	101.5	0.10
	20	81.3	8.66	69.7	0.00	117.0	12.4	74.0	0.00	214.9	22.7	86.0	0.01
	40	44.1	2.30	65.1	0.00	65.6	3.42	67.7	0.00	85.3	4.41	70.0	0.00
AH-24B-B3 *Three pass Tandem*	10	282.8	61.4	94.6	1.81	342.5	73.4	102.0	2.53	402.1	85.2	109.4	3.36
	20	231.7	25.2	88.3	0.33	292.7	31.4	95.8	0.50	353.6	37.5	103.3	0.70
	40	81.9	4.39	69.7	0.01	176.6	9.47	81.4	0.05	249.3	13.3	90.3	0.10
AH-24B-B5 *Five pass Tandem*	10	298.9	64.9	96.6	8.94	358.1	76.8	104.0	12.3	—	—	—	—
	20	259.7	28.2	91.7	1.82	319.9	34.3	99.2	2.63	379.9	40.3	106.6	3.55
	40	173.1	9.42	81.0	0.23	247.4	13.3	90.1	0.44	309.1	16.5	97.8	0.64
AH-24B-B7 *Seven pass Tandem*	10	—	—	—	—	—	—	—	—	—	—	—	—
	20	273.0	29.7	93.4	5.33	332.7	35.8	100.8	7.56	392.2	41.7	108.2	10.1
	40	208.3	11.4	85.4	0.86	269.7	14.6	92.9	1.36	330.7	17.6	100.5	1.95

* Single-pass heaters are not recommended for liquid service. In many cases, a smaller multi-pass model would be a more economical choice. For 50 Hz power supply, derate output by 10%. For complete model coding, refer to page 69. Above figures are based on calculations at sea level.

5/8" Tension-wound Finned Tubing (10 fins/inch)

Water – 60°F EAT

		ENTERING WATER TEMPERATURE											
		180°F				200°F				220°F			
MODEL	ΔT F°	OUTPUT MBH	FLOW USGPM	FAT °F	PD PSI	OUTPUT MBH	FLOW USGPM	FAT °F	PD PSI	OUTPUT MBH	FLOW USGPM	FAT °F	PD PSI
AH-12A-A1* *One pass*	10	37.6	7.29	89.4	0.01	50.4	9.75	99.5	0.01	64.3	12.4	110.6	0.02
	20	18.9	1.79	74.4	0.00	23.6	2.23	78.0	0.00	37.2	3.55	88.7	0.00
	40	13.2	0.61	69.8	0.00	16.9	0.79	72.7	0.00	20.9	0.97	75.7	0.00
AH-12A-A3 *Three pass*	10	53.7	10.5	102.3	0.35	64.9	12.6	111.3	0.51	76.1	14.7	120.3	0.69
	20	42.5	4.13	93.3	0.06	55.6	5.39	103.7	0.10	67.0	6.48	112.8	0.14
	40	18.6	0.88	74.2	0.00	31.7	1.52	84.4	0.01	46.0	2.21	95.8	0.02
AH-16A-A1* *One pass*	10	72.3	14.1	95.5	0.02	94.2	18.3	106.5	0.03	113.0	21.9	115.9	0.04
	20	34.2	3.28	76.4	0.00	58.2	5.62	88.3	0.00	81.7	7.89	100.0	0.01
	40	24.0	1.14	71.4	0.00	30.8	1.46	74.7	0.00	38.0	1.80	78.1	0.00
AH-16A-A3 *Three pass*	10	91.7	17.9	105.3	0.69	110.1	21.4	114.5	0.98	128.5	25.0	123.8	1.32
	20	78.2	7.63	98.5	0.13	96.9	9.43	107.8	0.20	115.6	11.2	117.2	0.28
	40	44.0	2.13	81.3	0.01	67.0	3.25	92.7	0.03	87.9	4.26	103.2	0.04
AH-16A-A5 *Five pass*	10	95.6	18.7	107.3	3.37	113.9	22.2	116.5	4.73	132.2	25.7	125.7	6.30
	20	85.1	8.31	102.0	0.70	103.6	10.1	111.2	1.02	122.1	11.9	120.5	1.39
	40	62.2	3.03	90.4	0.10	83.8	4.08	101.2	0.18	102.7	4.98	110.7	0.26
AH-20A-A1* *One pass*	10	117.1	22.9	96.3	0.03	144.4	28.1	104.9	0.04	171.6	33.4	113.5	0.06
	20	68.1	6.61	72.2	0.00	103.4	10.0	91.9	0.01	134.6	13.1	101.7	0.01
	40	40.3	1.93	72.2	0.00	51.4	2.47	75.6	0.00	63.2	3.02	79.2	0.00
AH-20A-A3 *Three pass*	10	136.7	26.7	102.5	0.95	163.4	31.9	111.0	1.34	190.2	37.0	119.5	1.79
	20	119.3	11.7	97.0	0.19	146.4	14.3	105.6	0.28	173.5	16.9	114.1	0.39
	40	78.4	3.82	84.1	0.02	109.2	5.31	93.7	0.04	142.0	6.90	104.1	0.07
AH-20A-A5 *Five pass*	10	141.4	27.7	104.0	4.58	168.0	32.8	112.5	6.37	194.6	37.9	120.9	8.45
	20	127.6	12.5	99.6	0.98	154.4	15.1	108.1	1.41	181.3	17.6	116.6	1.91
	40	100.7	4.92	91.2	0.17	128.2	6.25	99.8	0.26	155.6	7.57	108.4	0.37
AH-24A-A1* *One pass*	10	165.9	32.4	98.7	0.04	202.9	39.5	107.4	0.07	239.9	46.6	116.2	0.09
	20	113.2	11.0	86.2	0.01	156.3	15.2	96.3	0.01	196.9	19.1	105.9	0.02
	40	59.0	2.82	73.4	0.00	75.2	3.59	77.1	0.00	92.2	4.40	81.0	0.00
AH-24A-A3 *Three pass*	10	188.8	36.9	104.2	1.42	225.2	43.9	112.8	1.98	261.6	50.8	121.4	2.63
	20	167.3	16.3	99.0	0.30	204.1	19.9	107.7	0.43	240.9	23.4	116.4	0.59
	40	118.7	5.77	87.4	0.04	159.0	7.73	96.9	0.07	201.3	9.77	106.9	0.11
AH-24A-A5 *Five pass*	10	194.4	38.0	105.5	6.73	230.6	44.9	114.1	9.32	266.7	51.8	122.7	12.3
	20	176.9	17.3	101.3	1.47	213.4	20.8	110.0	2.09	249.9	24.3	118.6	2.82
	40	142.8	6.97	93.2	0.26	180.0	8.76	102.0	0.40	217.2	10.6	110.8	0.57
AH-24A-A7 *Seven pass*	10	—	—	—	—	—	—	—	—	—	—	—	—
	20	181.5	17.7	102.4	4.13	217.8	21.2	111.0	5.85	254.2	24.7	119.7	7.85
	40	150.6	7.35	95.0	0.77	187.7	9.14	103.8	1.16	224.7	10.91	112.6	1.62
AH-24B-A1* *One pass Tandem*	10	323.2	63.3	98.5	0.22	387.5	75.7	106.2	0.30	451.7	88.0	114.0	0.40
	20	278.4	27.3	93.0	0.05	343.6	33.6	100.9	0.07	408.7	39.8	108.7	0.09
	40	155.7	7.58	78.3	0.00	239.4	11.7	88.3	0.01	313.4	15.2	97.1	0.02
AH-24B-A3 *Three pass Tandem*	10	345.6	67.8	101.2	5.92	409.2	80.0	108.9	8.09	472.7	92.2	116.6	10.6
	20	317.3	31.1	97.8	1.35	381.4	37.3	105.5	1.89	445.4	43.4	113.2	2.51
	40	261.4	12.8	91.0	0.26	326.7	16.0	98.8	0.39	391.8	19.1	106.7	0.54
AH-24B-A5 *Five pass Tandem*	10	—	—	—	—	—	—	—	—	—	—	—	—
	20	326.7	32.0	98.9	6.26	390.5	38.2	106.6	8.72	454.2	44.3	114.3	11.5
	40	277.8	13.6	93.0	1.26	342.7	16.8	100.8	1.83	407.3	19.9	108.6	2.50
AH-24B-A7 *Seven pass Tandem*	10	—	—	—	—	—	—	—	—	—	—	—	—
	20	—	—	—	—	—	—	—	—	—	—	—	—
	40	285.5	14.0	93.9	3.48	350.2	17.1	101.7	5.03	414.6	20.2	109.5	6.88

* Single-pass heaters are not recommended for liquid service. In many cases, a smaller multi-pass model would be a more economical choice. For 50 Hz power supply, derate output by 10%. For complete model coding, refer to page 69. Above figures are based on calculations at sea level.

1" Extruded Finned Tubing (9 fins/inch)

Water – 60°F EAT

MODEL	ΔT F°	ENTERING WATER TEMPERATURE											
		180°F				200°F				220°F			
		OUTPUT MBH	FLOW USGPM	FAT °F	PD PSI	OUTPUT MBH	FLOW USGPM	FAT °F	PD PSI	OUTPUT MBH	FLOW USGPM	FAT °F	PD PSI
AH-12A-B1* *One pass*	10	13.8	2.55	70.2	0.00	31.5	6.03	84.1	0.00	44.3	8.48	94.1	0.00
	20	10.2	0.93	67.4	0.00	12.8	1.17	69.3	0.00	15.6	1.43	71.4	0.00
	40	6.8	0.30	64.8	0.00	8.8	0.39	66.2	0.00	10.9	0.49	67.7	0.00
AH-12A-B3 *Three pass*	10	44.5	8.64	94.6	0.09	55.2	10.7	103.0	0.14	65.9	12.7	111.5	0.20
	20	28.3	2.72	81.7	0.01	42.4	4.09	92.8	0.02	53.3	5.13	101.4	0.03
	40	10.3	0.47	67.5	0.00	13.2	0.61	69.7	0.00	18.1	0.84	73.4	0.00
AH-16A-B1* *One pass*	10	46.8	9.06	83.5	0.00	67.2	13.0	93.9	0.00	89.2	17.2	105.3	0.01
	20	19.3	1.82	69.4	0.00	24.3	2.28	71.8	0.00	29.4	2.70	74.3	0.00
	40	13.0	0.60	66.1	0.00	16.8	0.77	68.0	0.00	20.8	0.96	69.9	0.00
AH-16A-B3 *Three pass*	10	78.3	15.3	99.8	0.17	95.7	18.6	108.8	0.25	113.2	22.0	117.9	0.35
	20	60.5	5.88	90.6	0.03	78.2	7.59	99.7	0.04	96.0	9.29	108.8	0.07
	40	19.5	0.92	69.5	0.00	32.5	1.55	76.0	0.00	57.3	2.75	88.7	0.01
AH-16A-B5 *Five pass*	10	84.5	16.5	103.0	0.91	101.8	19.8	112.0	1.31	119.1	23.1	121.0	1.78
	20	70.9	69.1	96.0	0.17	88.5	8.60	105.0	0.25	106.1	10.3	114.1	0.36
	40	40.4	1.95	80.2	0.01	60.6	2.93	90.5	0.03	81.9	3.96	101.5	0.06
AH-20A-B1* *One pass*	10	87.6	17.1	89.1	0.01	120.9	23.5	100.4	0.01	148.6	28.8	109.8	0.02
	20	32.3	3.07	70.4	0.00	41.0	3.89	73.3	0.00	88.4	8.52	89.2	0.00
	40	21.7	1.01	66.9	0.00	28.0	1.31	68.9	0.00	34.7	1.62	71.1	0.00
AH-20A-B3 *Three pass*	10	126.0	24.6	102.2	0.30	153.0	29.8	111.4	0.44	179.9	35.0	120.6	0.60
	20	101.6	9.92	93.9	0.05	129.0	12.6	103.2	0.08	156.4	15.2	112.5	0.12
	40	31.7	1.52	70.3	0.00	74.8	3.62	84.7	0.01	106.7	5.16	95.4	0.01
AH-20A-B5 *Five pass*	10	134.1	26.2	105.0	1.54	160.8	31.4	114.1	2.20	187.5	36.5	123.2	2.97
	20	115.3	11.3	98.6	0.30	142.5	13.9	107.8	0.44	169.6	16.5	117.0	0.62
	40	75.4	3.67	85.0	0.03	108.1	5.26	96.0	0.07	135.8	6.59	105.4	0.10
AH-24A-B1* *One pass*	10	126.2	24.5	91.2	0.01	160.0	31.1	99.6	0.01	193.9	37.5	108.1	0.02
	20	47.5	4.50	71.4	0.00	90.1	8.65	81.9	0.00	132.5	12.7	92.5	0.00
	40	32.5	1.51	67.6	0.00	41.8	1.95	69.9	0.00	51.8	2.41	72.2	0.00
AH-24A-B3 *Three pass*	10	160.2	31.3	99.8	0.35	193.3	37.6	108.1	0.51	226.5	43.9	116.4	0.69
	20	133.5	13.0	93.0	0.06	167.1	16.2	101.4	0.10	200.8	19.5	109.9	0.14
	40	68.2	3.28	76.6	0.00	109.6	5.29	86.9	0.01	153.3	7.40	97.8	0.02
AH-24A-B5 *Five pass*	10	168.5	32.9	101.9	1.77	201.4	39.2	110.1	2.50	234.3	45.5	118.4	3.35
	20	147.8	14.4	96.6	0.35	181.1	17.6	105.0	0.52	214.4	20.8	113.3	0.72
	40	108.8	5.29	86.8	0.05	142.7	6.92	95.2	0.09	176.7	8.55	103.7	0.13
AH-24A-B7 *Seven pass*	10	172.4	33.7	102.9	5.01	205.2	40.0	111.1	7.02	238.0	46.2	119.4	9.37
	20	154.6	15.1	98.3	1.04	187.7	18.3	106.7	1.51	220.8	21.4	115.0	20.7
	40	120.3	5.86	89.7	0.17	154.1	7.48	98.1	0.27	187.8	9.10	106.6	0.39
AH-24B-B1* *One pass Tandem*	10	272.2	53.3	93.3	0.05	331.8	64.8	100.7	0.07	391.3	76.2	108.1	0.10
	20	203.2	19.8	84.7	0.01	275.0	26.8	93.6	0.01	335.5	32.6	101.1	0.02
	40	80.9	3.89	69.6	0.00	112.1	5.39	73.4	0.00	204.3	9.88	84.7	0.00
AH-24B-B3 *Three pass Tandem*	10	306.5	60.0	97.6	1.51	365.1	71.3	104.8	2.10	243.7	82.5	112.1	2.79
	20	273.1	26.7	93.4	0.32	332.4	32.5	100.7	0.46	391.6	38.1	108.1	0.63
	40	209.4	10.2	85.5	0.05	269.8	13.2	92.9	0.08	330.2	16.1	100.4	0.12
AH-24B-B5 *Five pass Tandem*	10	314.7	61.7	98.6	7.13	373.1	72.9	105.8	9.86	431.5	84.0	113.1	13.0
	20	287.5	28.2	95.2	1.56	346.3	33.8	102.5	2.23	405.2	39.5	109.8	3.00
	40	234.1	11.5	88.6	0.28	294.0	14.4	95.9	0.34	353.9	17.2	103.4	0.61
AH-24B-B7 *Seven pass Tandem*	10	—	—	—	—	—	—	—	—	—	—	—	—
	20	294.2	28.8	96.0	4.39	352.9	34.5	103.3	6.21	411.5	40.1	110.6	8.31
	40	245.8	12.0	90.0	0.82	305.5	14.9	97.4	1.23	365.0	17.8	104.8	1.72

* Single-pass heaters are not recommended for liquid service. In many cases, a smaller multi-pass model would be a more economical choice. For 50 Hz power supply, derate output by 10%. For complete model coding, refer to page 69. Above figures are based on calculations at sea level.

Ruffneck™
Heaters for the Harshest Environments

ISO 9001

Owner's Manual

Advanced Horizontal Series

Heat-Exchanger Unit Heaters

APPROVED LOCATIONS

The Forced Air Heaters are CSA listed, certified for the following locations:

Class I, Divisions 1 & 2, Groups C & D;
Class II, Division 1 & 2, Groups E, F, & G;
Class III, Division 1 & 2;
Temperature Code T3B 329˚F (165˚C)
(On Applicable Models Only)

For details of hazardous locations with potential for explosion, refer to the Canadian Electrical Code, Part 1, Section 18 or National Electrical Code articles 500-516.



This manual covers installations, maintenance, repair and replacement parts.

WARNING!
READ ALL IMPORTANT NOTICES ON PAGE 3.
PLEASE ADHERE TO INSTRUCTIONS PUBLISHED IN THIS MANUAL.
Failure to do so may be dangerous and may void certain provisions of your warranty.

Ruffneck™ is a key brand of CCI Thermal Technologies Inc.
Copyright © 2014. All rights reserved.

5475.Rev.9.00

Issue Date: January 2014
Printed in Canada

Photocopy this page for reuse.

HEATER MAINTENANCE CHECKLIST

For Heat-Exchanger Unit Heaters

Heater Model:_____ Serial No.: _____

Date of Maintenance: _____ Maintenance Done By: _____

Comments: _____

_____

WARNING!
Heater should only be serviced by qualified personnel with heating equipment experience. Disconnect heater from power supply before servicing heater. Lock the switch in the "OFF" (open) position and/or tag the switch to prevent unexpected power application.

PERIODIC (before and as required during heating season)

1. CLEAN
- ☐ Finned Tubes
- ☐ Fan
- ☐ Fan Guard
- ☐ Motor
- ☐ Louvers

2. CHECK
- ☐ Motor for smooth, quiet operation
- ☐ Louvers for proper angle and tightness
- ☐ Electrical junction box cover for tightness

Remove dust using compressed air. Do not spray with water or solvents.

ANNUAL (before heating season)

1. ELECTRICAL

☐ **Check all terminal connections and conductors.** Tighten loose connections. Conductors with damaged insulation must be replaced.

2. MECHANICAL

☐ **Check for fluid leakage.** If any fluid leakage occurs from the heater, remove it from service and have the heat exchanger replaced. A factory supplied heat exchanger can be shipped in less than a week from stock. Refer to the "Repair and Replacement" section for details.

☐ **Electrical junction box.** Inside of enclosure must be clean, dry, and free of foreign materials. Cover must be completely on and tight.

☐ **Check motor shaft bearing play.** Replace motor if play is excessive or if motor does not run quietly and smoothly. Motor bearings are permanently lubricated.

☐ **Check fan.** Replace immediately if cracked or damaged.

☐ **Check louvers.** Louver screws should be tight. Louvers are not to be closed more than 75˚ from horizontal.

☐ **Check the tightness of all hardware.** All nuts and bolts, including mounting hardware, must be tight.

☐ **TURN HEATER MOTOR ON FOR A MINIMUM OF 15 MINUTES.** Check for air exiting heater through louvers and smooth running of fan motor.

IMPORTANT NOTICES

WARNING!
Read and adhere to the following. Failure to do so may result in severe or fatal injury.

1. Read and follow the instructions in this manual.
2. Heater to be used only in the hazardous locations indicated on the heater's data plate.
3. Heater is for dry indoor use only. Do not immerse in water. Do not store or use in areas exposed to rain or snow.
4. Heater is to be connected and serviced only by a qualified electrician experienced with hazardous location equipment.
5. Installation, piping, and wiring of he heater must adhere to all applicable codes.
6. It is essential that any unit heater that will be used in a hazardous (classified) location is equipped with a electric motor approved for such service, and the temperature of the heat transfer medium is below the ignition temperature of the atmosphere. Refer to applicable electrical codes for additional information.
7. Disconnect heater from power supply at integral disconnect or fuse box before opening enclosures or servicing heater. Lock the switch in the "OFF" (open) position and/or tag the switch to prevent unexpected power application. IF INTEGRAL DISCONNECT IS BEING SERVICED, verify that power has been disconnected at fuse box or main panel. Lock the switch in the "OFF" (open) position and/or tag the switch to prevent unexpected power application.
8. Do not operate heater in atmospheres which are corrosive to steel or aluminum, unless it has been coated with a factory approved protective coating.
9. For steam service use only single-pass models. Refer to model coding (page 7) for number of passes in heat exchanger.
10. Refer to heat exchanger data plate for pressure and temperature limits.
11. Heater must be kept clean. When operating in a dirty environment, regularly clean the finned tubes, fan and fan guard. Follow the recommended maintenance procedures. Refer to the "Heater Maintenance Checklist" section for details.
12. Use factory approved replacement parts only.
13. If there are any questions or concerns regarding the heater, contact the factory. Refer to the last page of this manual for details.
14. HVAC fluids must be non-flammable, non-compressable, non-explosive & non-toxic.
15. Do not operate the heater with any of the louvers fully closed or overriding their stops.
16. Do not operate heater in ambient temperatures above 104°F (40°C).
17. See applicable electrical codes for seal requirements in field installed conduits. Factory installed conduits require no further sealing.
18. Base of the heater is to be mounted a minimum of 7.9 ft (2.4 m) above the floor. Refer to the "Installation" section for details.

WARRANTY WILL BE VOID
IF INSTRUCTIONS ARE NOT FOLLOWED

INSTALLATION

The installation instructions provide a general guideline for the installation and wiring of the heater. All applicable codes must be adhered to.

MECHANICAL

LOCATION

1. For optimum heating, the heaters should be installed as follows:
   a. There are no obstructions that may impede the heater's air inlet or discharge.
   b. The air discharge is directed into open areas and not at occupants.
   c. The air discharge is not directed at a thermostat.
   d. The air discharge is directed across areas of heat loss, such as doors and windows (see Figure 1).
   e. The air discharge is directed along, and at a slight angle towards, exterior walls (see Figure 1).
   f. If equipment freeze protection is important, direct air discharge at equipment.
   g. Air discharge streams support each other and create a circular air flow. It is not required that the heater's air throw reaches the next heater.
   h. For warehouses or large workshops it may be acceptable to use fewer, larger heaters.

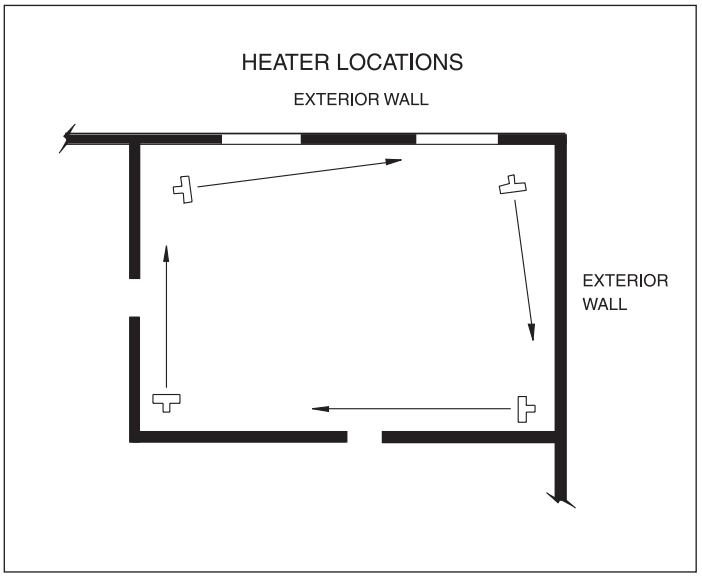

FIGURE 1

MOUNTING

1. The unit heater is designed to be installed in an upright and level position. However, it may be installed in any position provided that for steam service the inlet is above the outlet and the bottom of the heat exchanger drains towards the outlet.
2. Heater cabinets are designed to be mounted from the top or bottom using 1/2” (14 mm) bolts. For heater dimensions, see Figure 2 for single fan or Figure 3 for 24” tandem.

DIM		AH-12A	AH-16A	AH-20A	AH-24A
A	in	15-13/16	19-13/16	23-13/16	27-7/8
	mm	401	503	605	707
B	in	19-7/16	23-1/2	27-1/2	31-1/2
	mm	494	596	698	800
C	in	4-3/16	4-3/16	4-3/16	4-3/16
	mm	107	107	107	107
D	in	7-15/16	7-9/16	7-3/16	6-7/8
	mm	201	192	183	174
E	in	23-5/8	23-5/8	23-5/8	23-5/8
	mm	600	600	600	600
F	in	18-3/16	22-3/16	26-3/16	30-3/16
	mm	462	564	665	766
G	in	9/16	9/16	9/16	9/16
	mm	14.3	14.3	14.3	14.3
H	in	23-7/8	27-7/8	31-7/8	35-7/8
	mm	606.5	708.5	809.5	911.5
I	in	1-9/16	1-9/16	1-9/16	1-9/16
	mm	39	39	39	39
J	in	5/8	5/8	5/8	5/8
	mm	16	16	16	16
K	in	27-1/2	31-5/8	35-1/2	39-5/8
	mm	698.5	802.5	903	1005

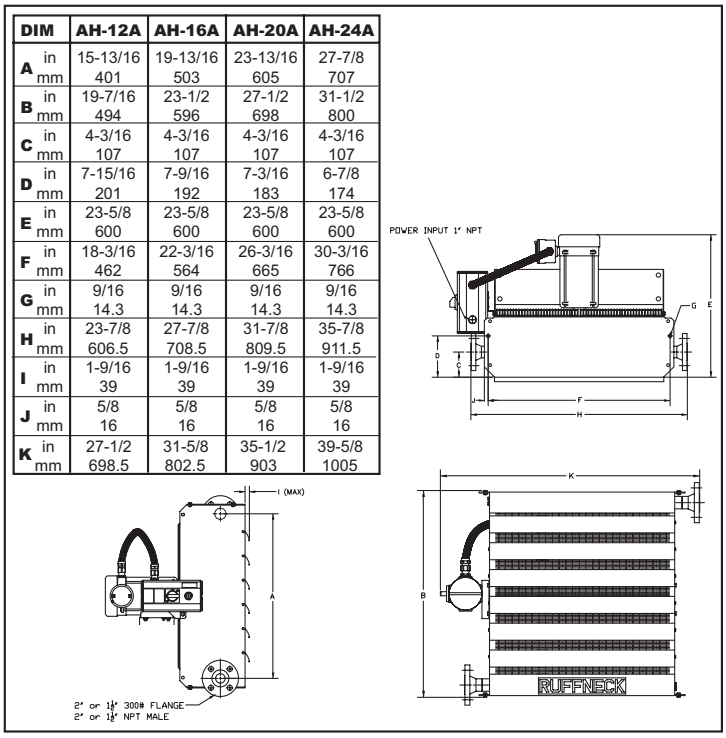

FIGURE 2

AH-24B Tandem		
A	in.	52-15/16
	mm	1345
B	in.	31-1/2
	mm	800
C	in.	4-13/16
	mm	122
D	in.	7-7/16
	mm	189
E	in.	24-3/16
	mm	615
F	in.	58-1/4
	mm	1480
G	in.	9/16
	mm	14.3
H	in.	36-7/8
	mm	937
I	in.	2-1/16
	mm	53
J	in.	5/8
	mm	16
K	in.	59-1/2
	mm	1512
L	in.	65-1/2
	mm	1662.5

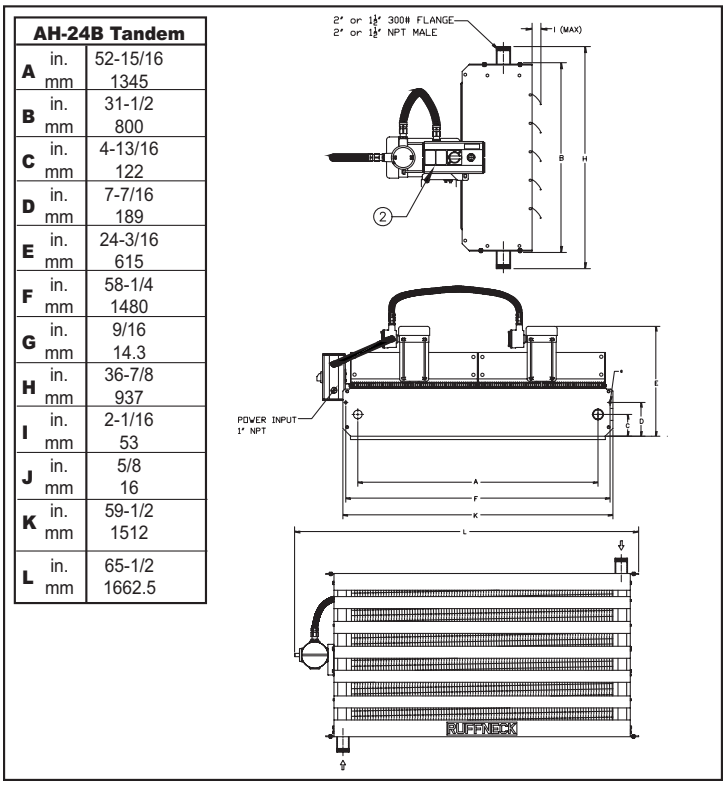

FIGURE 3

3. The mounting structure must be strong enough to:
   a. support the heater’s weight (refer to the specification section),
   b. provide sufficient stiffness to prevent excessive vibration, and
   c. withstand abusive situations such as transportable installations.
4. For ease of installation, a variety of mounting kits are available from the factory.

MOUNTING HEIGHTS

1. The base of the heater is to be elevated a minimum of 7.9 ft (2.4 m) above the floor.
2. Heaters maybe mounted at higher elevations and still provide warm air at the floor level. The maximum elevation at which warm air will still reach the floor depends on site and operation conditions.
3. Louvers can be adjusted to provide greater downward deflection of the discharge air. It is recommended that louvers not be closed more than 75° from full open.

MOUNTING CLEARANCES

1. Leave at least 20” (500 mm) clearance between the rear of the motor and the nearest obstruction.
2. Clearance equal to the height of the heater cabinet above, or beneath, the cabinet is required for easy fan or motor replacement.

TEMPERATURE CONTROL

1. If required, the unit heater’s output may be thermostatically controlled by the following:
   a. Airflow through the heat exchanger can be turned on and off by thermostatically controlling the fan motor. Usually the flow of the heat transfer medium is allowed to pass through the heat exchanger without interruption. This is the most economical method of controlling the heater.
   b. Heat transfer medium flow may be controlled by a thermostatic valve, while allowing the fan motor to run continuously to circulate room air.
   c. Absolute control of the heater output from the heat exchanger will require that the fan and heat transfer medium be shut off. Such control of the heater output is possible by a thermostatic valve control in combination with the thermostatic fan control.

FINAL INSPECTION

1. Before application of electrical power:
   a. Check that all connections are secured and comply with the applicable wiring diagram (see Figure 7) and code requirements.
   b. Confirm the power supply is compatible with the data plate rating on motor.
   c. Remove any foreign objects from heater.
   d. Ensure all electrical covers are well secured.
   e. Ensure the fan rotates freely, ensure air exits through louvers and the fan rotates counterclockwise when viewed from the rear of the heater.

PIPING APPLICATIONS

1. For steam service use only single-pass heaters. Refer to Model Coding Section for tube-side pass designation.
2. Refer to figures 4-6 for typical piping applications.
3. To prevent condensate from entering the heater, slope steam supply lines toward the steam main. In long supply lines, drip traps may be needed.
4. For steam systems, use properly sized continuously draining steam traps, such as float or thermostatic types. Traps must be sized to handle start up and operational flows.
5. If the condensate return main is above the heater outlet or is pressurized, install a check valve after the steam trap and a drain valve at the strainer to drain the system during the off season.
6. Allow for efficient condensate drainage and subcooling by maintaining the outlet pipe size between the heater and steam trap. Provide at least a 10 inch (254 mm) drop leg at condensate outlet.
7. In horizontal steam and condensate lines use eccentric reducers only.
8. Allow for pipe expansion.
9. Eliminate pipe stress by adequately supporting all piping. Do not rely on heater to support piping.
10. All piping must be properly sized for expected flow rates.
11. For more piping information, consult industrial piping handbooks.
12. Comply with all applicable piping codes.

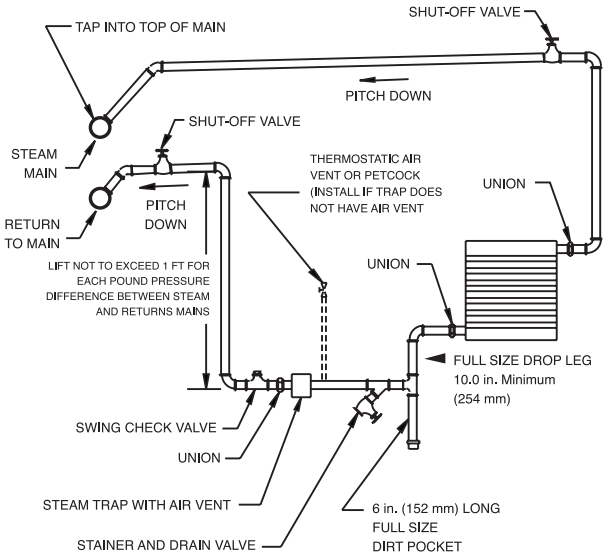

NOTES: 1. This piping arrangement is only for two-position-type control. Modulating steam control may not provide sufficient pressure to lift condensate to return main.
2. Do not use with fluids corrosive to steel.
3. Install using proper piping practices.
4. In horizontal pipe runs, use eccentric reducers only.
5. Use a properly sized steam trap.

Unit heater connections to overhead steam and return mains.

FIGURE 4

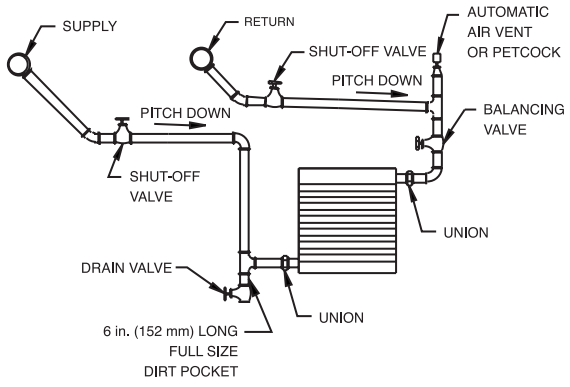

NOTES: 1. Do not use with fluids corrosive to steel.
2. Install using proper piping practices.

Unit heater connections to overhead liquid mains

FIGURE 5

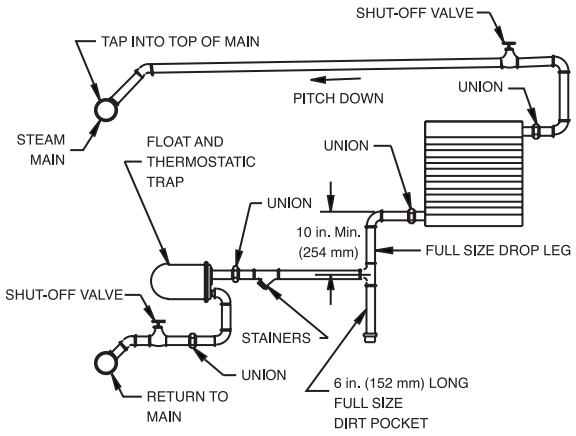

NOTES: 1. For medium to high pressure systems a bucket or float trap must be used.
2. Do not use with fluids corrosive to steel.
3. Install using proper piping practices.
4. In horizontal pipe runs, use eccentric reducers only.
5. Use a properly sized steam trap.

Unit heater connection for low-pressure steam, open gravity or vacuum return system.

FIGURE 6

MOTOR WIRING DIAGRAMS

CAUTION

Installation must be done by qualified personnel, and comply with local electrical codes.

For internal wiring of control devices and starters, consult device manufacturer. The thermostat must have an electrical rating equal to or exceeding the rating of the control device. For wiring of the fan motor, refer to diagram on the motor. These wires must be connected in series with the motor control circuit.

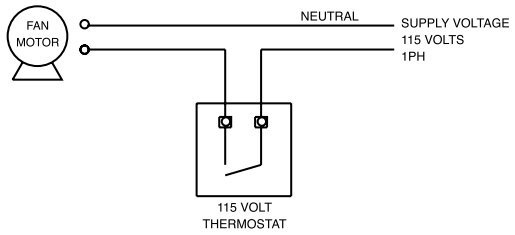

THERMOSTATIC CONTROL FOR
115 VOLTS, 1 PHASE MOTORS

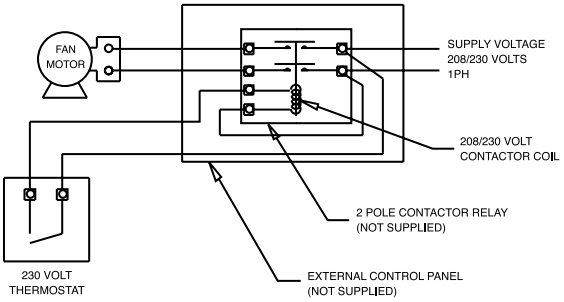

THERMOSTATIC CONTROL FOR
208/230 VOLTS, 1 PHASE MOTORS

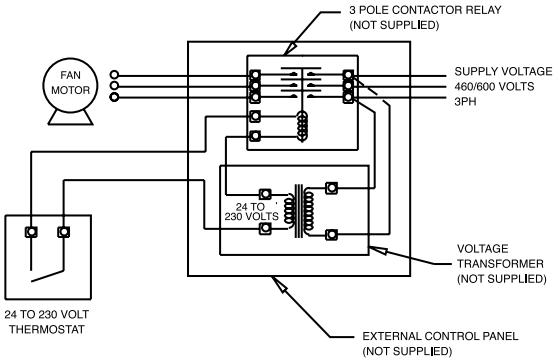

THERMOSTATIC CONTROL FOR
460/600 VOLTS, 3 PHASE MOTORS

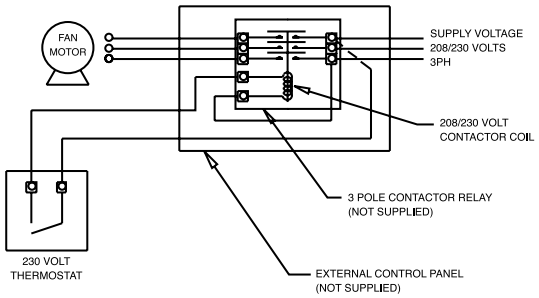

THERMOSTATIC CONTROL FOR
208/230 VOLTS, 3 PHASE MOTORS

WIRING DIAGRAM FOR BUILT-IN DISCONNECT SWITCH HEATERS

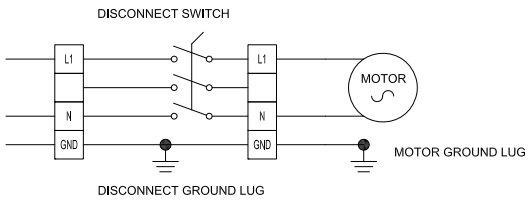

SINGLE PHASE

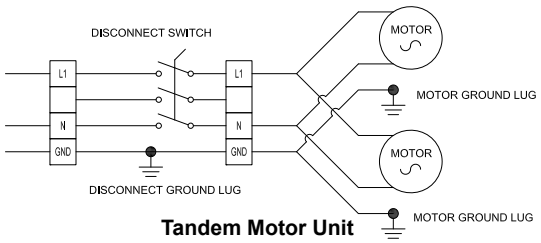

Tandem Motor Unit
SINGLE PHASE

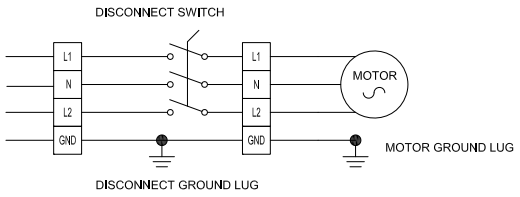

Single Motor Unit
THREE PHASE

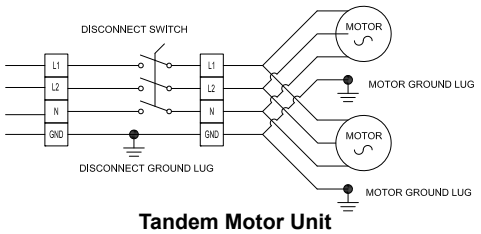

Tandem Motor Unit
THREE PHASE

MODEL CODING

Base Model

Series	Fan	Heat Exchanger				Cabinet		Motor			
AH	–	12A	–	A	1	A	1	–	A	1	–	1	A	–	D

FAN SIZE	
12” (305 mm) DIA	12A
16” (406 mm) DIA	16A
20” (508 mm) DIA	20A
24” (610 mm) DIA	24A
24” (610 mm) tandem	24B ⑥
A = Standard single fan B = Standard dual fan	

FAN SIZE						
TUBING	WALL THICKNESS	ROWS	FINNING			
			FINS/ INCH	MATERIAL	TYPE	
5/8” (16 mm)	.065” (1.7 mm)	3	10	AL	TW	**A**
1” (25 mm)	.083” (21 mm)	2	9	AL	EX	**B**
1” (25 mm)	.135” (3.4 mm)	2	5	AL	EX	**C**
TW = Tension Wound EX = Extruded				AL = Aluminum		

PASSES	
1 Pass	1
3 Passes	3
5 Passes	5 ⑧
7 Passes	7 ⑨

CONNECTIONS	
1½” NPT Male Sch. 40	A
1½” (40 mm) 300# RF flange	B
2” NPT Male Sch. 80	C
2” (50 mm) 300# RF flange	D

EXCHANGER COATINGS		
Heat resistant aluminum paint	1	
Heresite® phenolic coating	2	①

④ MOTOR ELECTRICAL SPECIFICATIONS			
	VOLTS	PHASE	HERTZ
A	115	1	60
⑤ B	208	1	60
⑤ C	208	3	60
D	230	1	60
E	230	3	60
③ F	460	1	60
G	460	3	60
H	575	3	60
③ I	220	1	60
③ J	380	3	60
③ K	440	3	60

⑩ Built-in Disconnect Switch

HEATER CERTIFICATION	
1	General Purpose
⑦ 2	X-proof Motor Only, groups C, D, E, F, & G
3	CSA Certified Heater

DISCHARGE TYPE	
1	2-way aluminum louvres
2	Nozzle
3	4-way aluminum louvres

CABINET MATERIAL	
A	Epoxy powder coated carbon steel
①② B	Heresite® phenolic coated carbon steel

NOTE:
Ruffneck™ utilizes Doerr/Emerson/Baldor as our standard motor. Specifying any other O.E.M. motor may result in longer lead times. All heat exchangers are registered to CRN OH10951.2C.
They are approved for use in all provinces and territories in Canada.

① Heresite® coated exchangers and cabinets: contact factory for quote.
② Louvres and fan blades are also Heresite® coated.
③ Contact factory for shipping lead time.
④ Motor designed to be used at rated voltage with tolerances of ±15%.
⑤ Motor may be marked 230V, but is suitable for 208V operation.
⑥ Tandem configuration not available on AV models.
⑦ 460 1 phase motors are only certified for groups D, F & G
⑧ Only available in 16” (406 mm) and larger units
⑨ Only available in 24” (610 mm) and larger units
⑩ Built-in Disconnect only available with CSA Certified heater

REPAIR & REPLACEMENT

WARNING

Heater should only be serviced by qualified personnel with heating equipment experience. Disconnect heater from power supply before repairing heater. Lock the switch in the off (open) position and/or tag the switch to prevent unexpected power application. Heater surfaces may be hot.

1. After repairing any component:
   a. Check that electrical connections are correct and secure.
   b. Remove any foreign material from enclosures,
   c. Install and secure all covers.
   d. Ensure that all fasteners are tight.
   e. Remove all foreign objects from heater.
   f. Ensure air exits through louvers and fan rotates counterclockwise when viewed from rear of heater (see Figure 9).

MOTOR, FAN, AND FAN GUARD

1. Remove bolts holding motor to the motor mount.
2. Remove the two piece fan guard assembly (see Figure 10).
3. Lift the motor assembly off the motor mount.
4. Before removing the fan, measure and record the location of the fan hub on the motor shaft (see Figure 11). If fan is difficult to remove, use a gear puller on the fan hub.
5. To reassemble, position fan on motor shaft and tighten set screws.
6. Place motor assembly onto motor mount and fasten the fan guard to cabinet.
7. Center fan in shroud opening. Leave approximately 1/16” to 3/16” (1.6 to 4.8 mm) gap between the motor and fan guard. (see Figure 8).
8. Bolt motor to motor mount. Manually spin the fan blade to ensure it rotates freely before applying power.
9. Air must exit through louvers and fan must rotate counterclockwise when viewing from the rear of the heater (see Figure 9).

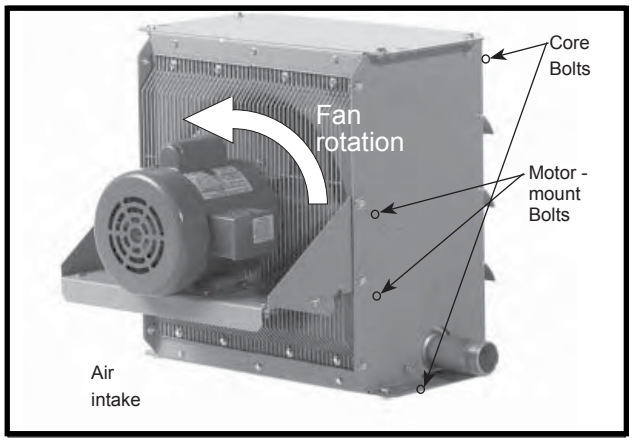

FIGURE 9

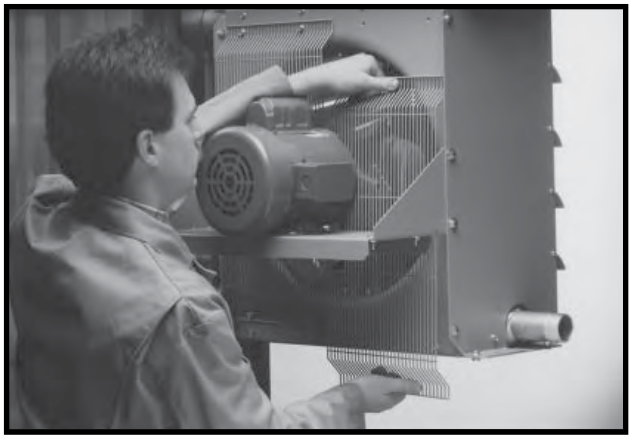

FIGURE 10



FIGURE 11

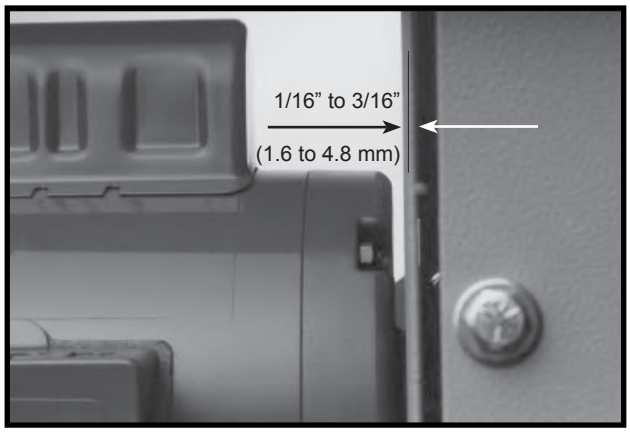

FIGURE 8

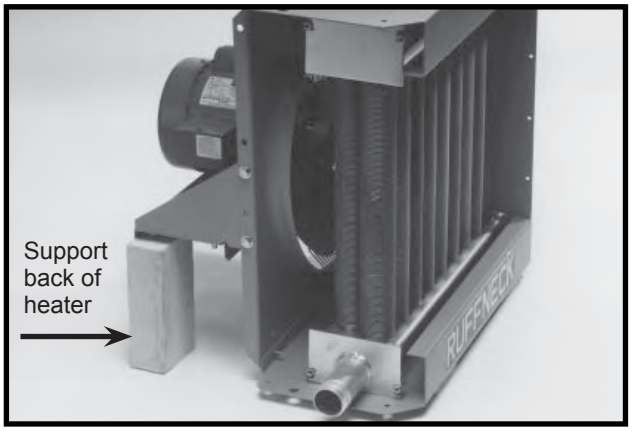

FIGURE 12

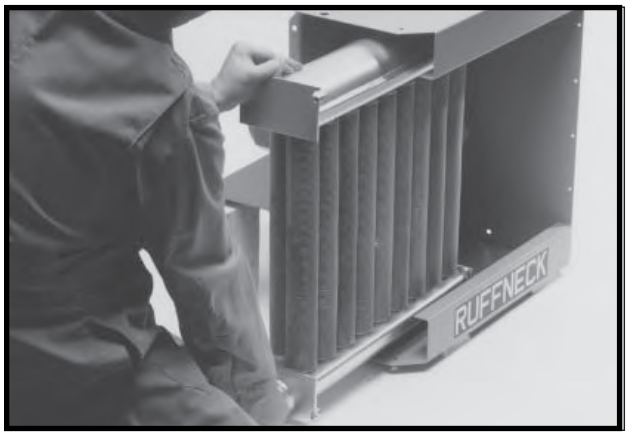

FIGURE 13

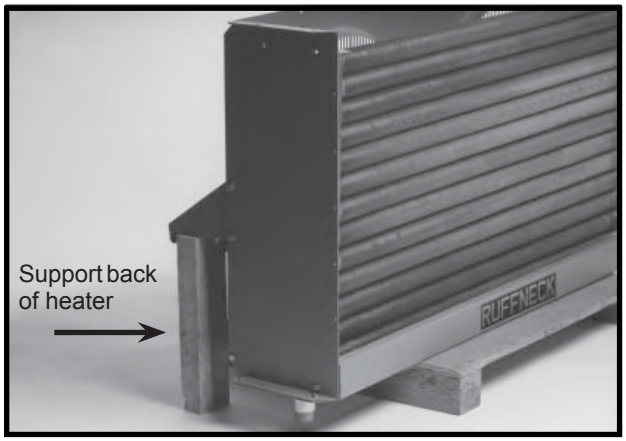

FIGURE 14



FIGURE 15



FIGURE 16

HEAT EXCHANGER REMOVAL OF SINGLE- MOTOR UNIT HEATER

1. Remove unit heater from its mounted location and lower to a stable working surface.
2. Remove all louver blades from the front of the cabinet.
3. Remove the left fan guard and left cabinet side panel as described below. If the heat exchanger has flanged connections, also remove the top cabinet panel.
4. Support the weight of the heat exchanger by the piping connection while removing the four core bolts that fasten the heat exchanger to the cabinet. (See figure 9). Allow heat exchanger to rest on the bottom of the cabinet.
5. Remove the two bolts holding the motor mount to the left side of the cabinet. Support motor mount while removing these two bolts. Once cabinet side has been removed, reinsert the bolts in the motor mount. Place a support under the motor mount to prevent the cabinet from rolling over during heat exchanger removal (see Figure 12).
6. With the cabinet side removed and motor mount supported, slide heat exchanger out of the cabinet. (see Figure 13). On larger units, assistance may be necessary due to the weight of the heat exchanger.
7. To install heat exchanger into cabinet, reverse order of heat exchanger removal procedure.

HEAT EXCHANGER REMOVAL OF DOUBLE-MOTOR UNIT HEATER

(Due to the weight of the heat exchanger, an assistant is recommended to help with the following procedure.)

1. Remove unit heater from its mounted location and lower to a stable work surface. To prevent damage to the bottom piping connection, do not rest heater on connection while servicing.
2. Remove all louvers from the front of the cabinet.
3. Remove the top cabinet panel by removing the four bolts in the corners of the top panel and the fasteners along the top of the shrouds (see Figure 14).
4. Have an assistant support the weight of the heat exchanger while removing the eight bolts that fasten the heat exchanger to the cabinet (see Figure 15). Once the bolts on one side are removed, lower that side of the heat exchanger to rest on the bottom of the cabinet. Place a support under the motor mount of the cabinet to prevent the cabinet from rolling over during heat exchanger removal (see Figure 14).
5. Loosen cabinet side panel fasteners but do not remove. If the heat exchanger has flanged connections also remove the left side panel.
6. Lift the heat exchanger up and out through the front of the cabinet (see Figure 16).
7. To install heat exchanger procedure, reverse the order of heat exchanger removal procedure.

PARTS LIST

AH - 12A, - 16A, - 20A, and - 24A

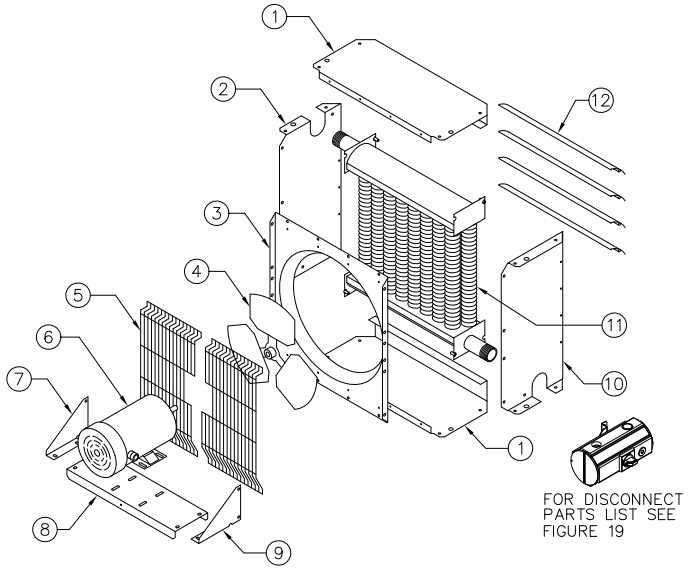

FIGURE 17

ITEM	AH-12A	AH-16A	AH - 20A	AH-24A	AH-24B	DESCRIPTION
1	5378	5382	5386	5390	5394	Panel,AH Top/Bottom
2	5376	5380	5384	5388	5392	Panel, AH Right Side
3	5379	5383	5387	5391	5391	Panel, AH Shroud
4	5448	5449	5450	5451	5451	Fan
5	4087	4088	4089	5396	5396	Fan Guard (half)
6	***	***	***	***	***	Motor
7	3789	3789	3789	3789	3789	Bracket, Motor Mount Right
8	3785	3787	3787	5433	5433	Channel, Motor Mount
9	3788	3788	3788	3788	3788	Bracket, Motor Mount Left
10	5377	5381	5385	5389	5393	Panel, AH Left Side
11	**	**	**	**	**	Heat Exchanger
12	4075	4076	4077	5741	5742	Kit, Louver (c/w screws)

** Provide complete model and serial number of heater when ordering replacement heat exchanger.
*** Provide motor voltage, phase, horsepower and service classification when ordering replacement motor.
Note: For items not shown, contact factory.

AH - 24B

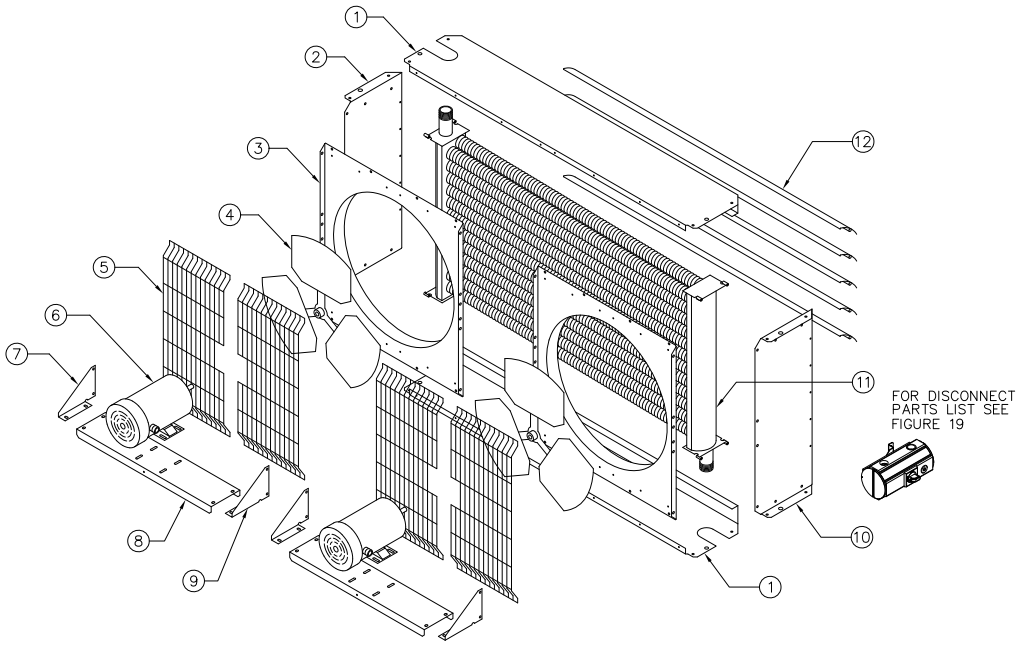

FIGURE 18

XS40 Disconnect

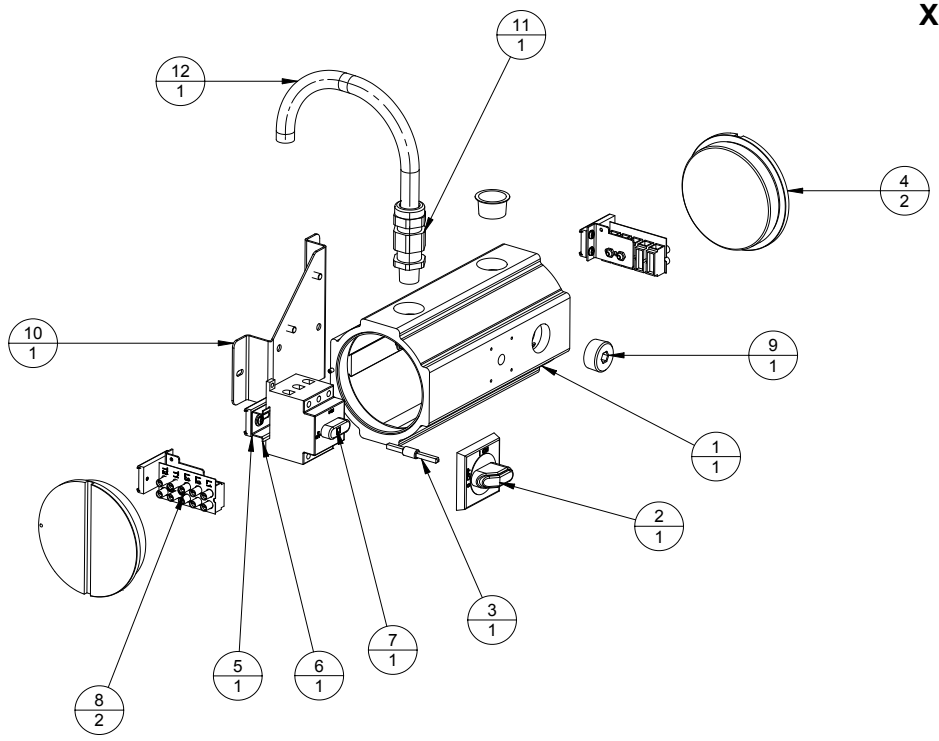

FIGURE 19

ITEM	Part Number	DESCRIPTION	QUANTITY
1	B16229-03	Terminal Box, X-max Series 2	1
2	12147	Disconnect Switch Handle	1
3	12241-02	Operating Shaft	1
4	B12334-01	Terminal Box Cover	2
5	B12676-07	Trolley, Disconnect Switch	1
6	11362	Bracket, Din Rail	1
7	12112	Switch, Disconnect	1
8	B12676-07	Terminal Block Ass'y	2
9	XHP100	Dry Seal Plug 1" NPT	1
10	11650	Mounting Bracket	1
11	Contact Manufacturer	Cable, Teck-90HL	1
12	Contact Manufacturer	Fitting, Teck Cable	1

GENERAL SPECIFICATIONS

Approvals	Class I, Division 1 & 2, Groups C and D; Class II, Division 1 & 2, Groups E, F, G CRN (Canada) - Steam and HVAC liquids only. - CRN OH10951.2C
Fan	Three blade aluminum, steel spider and hub with 5/8” bore.
Fan Guard	Two piece design with close wire spacing. 3/8” diameter probe will not enter. Epoxy coated to match cabinet color.
Mounting Holes	9/16” diameter holes, two at top and two at bottom of heater.
Cabinet Material	14 gauge (0.075”) steel. Epoxy coated with five-stage pretreatment, including iron phosphate.
Motors	CSA and/or UL listed 1725 RPM permanently lubricated ball bearing type with rigid base. Explosion-proof or general purpose construction. All 50 and 60 hertz, standard voltages available.
Louver Blades	Anodized extruded aluminum.
Header Material	3/16” (0.187”) carbon steel.
Fluid Connections	1-1/2” NPT male Sch. 40, 1-1/2” 300# RF flanges, 2” NPT Male Sch. 80 or 2” 300# RF flange
Max. Operating Press.	450 psi. Refer to Model Specifications below for restrictions.
Max. Operating Temp.	650˚F.
Finned Tubes	• 5/8” outside diameter (16 gauge, 0.065” wall thickness) carbon steel tubes. Tension wound aluminum fins @ 10 fins per inch, or • 1” outside diameter (14 gauge, 0.083” wall thickness) carbon steel tubes. Extruded aluminum fins @ 9 fins per inch, or • 1” outside diameter (10 gauge, 0.135” wall thickness) carbon steel tubes. Extruded aluminum fins @ 5 fins per inch.
Optional Disconnect	XS40 Disconnect Switch suitable for single and three phase motors.

MODEL SPECIFICATIONS

Base Model	Air Delivery**	Air Throw at 15 psi steam	Motor*** Requirements	Tube Passes	Max Allowable Pressure for Steam Units†	Net Weight Δ	Shipping Weight Δ	Net Weight Δ with Disconnect Switch	Shipping Weight Δ with Disconnect Switch
AH-12A-A__	1150 CFM	28’ (8.5m)	1/2 HP	1 or 3	150 psi	102 lbs.	142 lbs.	117 lbs.	167 lbs.
AH-12A-B__	1160 CFM	28’ (8.5m)	1/2 HP	1 or 3	200 psi	107 lbs.	147 lbs.	122 lbs.	172 lbs.
AH-12A-C1	1030 CFM	28’ (8.5m)	1/2 HP	1	300 psi	118 lbs.	158 lbs.	133 lbs.	183 lbs.
AH-16A-A__	1840 CFM	40’ (12.2m)	1/2 HP	1, 3 or 5	135 psi	127 lbs.	167 lbs.	142 lbs.	192 lbs.
AH-16A-B__	1780 CFM	40’ (12.2m)	1/2 HP	1, 3 or 5	150 psi	138 lbs.	178 lbs.	153 lbs.	203 lbs.
AH-16A-C1	1840 CFM	40’ (12.2m)	1/2 HP	1	395 psi	153 lbs.	193 lbs.	168 lbs.	218 lbs.
AH-20A-A__	2930 CFM	40’ (12.2m)	1/2 HP	1, 3 or 5	180 psi	155 lbs.	205 lbs.	180 lbs.	230 lbs.
AH-20A-B__	2700 CFM	40’ (12.2m)	1/2 HP	1, 3 or 5	140 psi	170 lbs.	220 lbs.	195 lbs.	245 lbs.
AH-20A-C1	3000 CFM	40’ (12.2m)	1/2 HP	1	450 psi	195 lbs.	245 lbs.	210 lbs.	270 lbs.
AH-24A-A__	3890 CFM	40’ (12.2m)	1/2 HP	1, 3, 5 or 7	165 psi	189 lbs.	249 lbs.	204 lbs.	274 lbs.
AH-24A-B__	3640 CFM	40’ (12.2m)	1/2 HP	1, 3, 5 or 7	190 psi	212 lbs.	272 lbs.	227 lbs.	297 lbs.
AH-24A-C1	3490 CFM	40’ (12.2m)	1/2 HP	1	335 psi	258 lbs.	318 lbs.	273 lbs.	343 lbs.
AH-24B-A__	7650 CFM	65’ (19.8m)	(2) 1/2 HP	1, 3, 5 or 7	235 psi	313 lbs.	413 lbs.	338 lbs.	438 lbs.
AH-24B-B__	7420 CFM	65’ (19.8m)	(2) 1/2 HP	1, 3, 5 or 7	295 psi	376 lbs.	476 lbs.	391 lbs.	501 lbs.
AH-24B-C1	6690 CFM	65’ (19.8m)	(2) 1/2 HP	1	450 psi	440 lbs.	540 lbs.	455 lbs.	565 lbs.

* See page 7 for model coding.
** At 70˚F and sea level.
*** Ruffneck reserves the right to substitute motors of higher horsepower.
Δ Add 12 lbs to flanged units.
† Pressure restrictions are for CSA Certified heaters only.

NOTES

LIMITED 1-YEAR WARRANTY

CCI Thermal Technologies Inc. warrants all Ruffneck™ Advanced Horizontal Series Unit Heaters against defects in materials and workmanship for a period of one (1) year from date of purchase on the following terms:

1. We will provide replacement parts free of charge as necessary to restore any unit to normal operating condition, provided that the inoperative parts be returned to us freight prepaid and that the replacement parts be accepted freight collect.
2. The complete heater may be returned to our plant for repair or replacement (at our discretion), provided that all related freight costs be borne by the customer.
3. Corrosion and contamination by dirt, dust, etc. will not be considered as defects and, therefore, are not warrantable.
4. The heater must not be modified in any way.
5. The heater must be installed, used and stored only in accordance with the owner's manual and placarded information. This warranty shall be limited to the actual equipment involved and, under no circumstances, shall include or extend to installation or removal costs, or to consequential losses or damages.

PLEASE ADHERE TO INSTRUCTIONS PUBLISHED IN THIS MANUAL.
Failure to do so may be dangerous and may void certain provisions of your warranty.
For further assistance, please call:

24-Hour Hotline: 1-800-661-8529

(U.S. and Canada)

Please have model and serial numbers available before calling.

Ruffneck™
Heaters for the Harshest Environments

CCI Thermal Technologies INC.
Heating and Filtration Solutions

5918 Roper Road
Edmonton, Alberta T6B 3E1 Canada
Phone: (780) 466-3178
Fax: (780) 468-5904
www.ccithermal.com

Ruffneck[MC]

Chauffages pour les environnements les plus rigoureux

ISO 9001

Guide d'utilisation
Aérothermes à échangeur de chaleur
Série AH
Advanced Horizontal

EMPLACEMENTS APPROUVÉS

Les systèmes de chauffage à air chaud pulsé sont homologués CSA pour les emplacements suivants :

Catégorie I, divisions 1 et 2, groupes C et D;
Catégorie II, divisions 1 et 2, groupes E, F et G;
Catégorie III, divisions 1 et 2;
Classe de température T3B 329 ˚F (165 ˚C)
(Uniquement sur les modèles applicables)

Pour plus de détails endroits dangereux avec des risques d'explosion, se référer au Code canadien de l'électricité, Partie 1, Section 18 ou des articles 500 à 516 du Code électrique national.



Ce guide traite de l'installation, de la maintenance, de la réparation et des pièces.

AVERTISSEMENT
LIRE TOUS LES AVIS IMPORTANTS À LA PAGE 3.
RESPECTER LES DIRECTIVES DU PRÉSENT GUIDE
pour éviter tout danger ainsi que l'annulation de certaines dispositions de la garantie.

Ruffneck™ est une marque déposée. Copyright © 2013. Tous droits réservés.

N° de pièce 5475.Rev.9.00

Date d'émission : Janvier 2014
Imprimé au Canada

Photocopier cette page pour la réutiliser.

LISTE DE CONTRÔLE DE MAINTENANCE DE L'AÉROTHERME

Pour aérothermes à échangeur de chaleur

Modèle d'aérotherme : _____ N° de série : _____

Date de maintenance : _____ Maintenance faite par : _____

Commentaires : _____

_____

AVERTISSEMENT

Seul un personnel qualifié et expérimenté avec les appareils de chauffage peut effectuer la maintenance de cet aérotherme. Couper l'alimentation électrique de l'aérotherme avant d'effectuer la maintenance de l'aérotherme. Régler l'interrupteur à la position OFF (arrêt) ou l'étiqueter pour empêcher tout branchement accidentel.

PÉRIODIQUE (avant ou, au besoin, pendant la période de chauffe)

1. NETTOYER

- ☐ Tuyaux à ailettes
- ☐ Ventilateur
- ☐ Grille de protection
- ☐ Moteur
- ☐ Lames déflectrices

2. VÉRIFIER

- ☐ Fonctionnement silencieux du moteur
- ☐ L'angle et le serrage des lames déflectrices
- ☐ L'étanchéité du couvercle de la boîte de jonction électrique

Enlever la poussière au jet d'air comprimé. Ne pas vaporiser d'eau ni de solvants.

ANNUELLE (avant la période de chauffe)

1. ENTRETIEN ÉLECTRIQUE

☐ **Vérifier tous les conducteurs et les bornes de connexion.** Serrer les connexions lâches. Remplacer les conducteurs dont l'isolation est endommagée.

2. ENTRETIEN MÉCANIQUE

☐ **Vérifier s'il y a des fuites de fluide.** S'il y a des fuites de fluide de l'aérotherme, le retirer du système et remplacer l'échangeur de chaleur. Les échangeurs de chaleur tenus en inventaire peuvent être expédiés en moins d'une semaine. Pour plus de détails, consulter la section « Réparation et remplacement ».

☐ **Boîte de jonction électrique.** L'intérieur de la boîte de jonction doit être propre, sec et exempt de corps étrangers. Le couvercle doit être complètement fermé et étanche.

☐ **Vérifier les roulements de l'arbre du moteur.** Remplacer le moteur s'il y a jeu excessif des roulements d'arbre du moteur ou si le moteur ne tourne pas silencieusement. Les roulements du moteur sont lubrifiés en permanence.

☐ **Vérifier le ventilateur.** Si le ventilateur est fissuré ou endommagé, le remplacer immédiatement.

☐ **Vérifier les lames déflectrices.** Les vis des lames déflectrices doivent être serrées. L'angle de fermeture des lames déflectrices ne doit pas dépasser 75° à partir de l'horizontale.

☐ **Vérifier le serrage de toutes les attaches.** Tous les boulons, écrous, vis et pièces d'assemblage, doivent être bien serrés.

☐ **FAIRE FONCTIONNER LE MOTEUR DE L'AÉROTHERME PENDANT AU MOINS 15 MINUTES.** S'assurer que l'air sort par les lames déflectrices et que le moteur tourne silencieusement.

AVIS IMPORTANTS

AVERTISSEMENT :

Lire et respecter les directives suivantes afin d'éviter tout risque de blessure grave ou mortelle.

1. Veiller à lire et suivre les instructions du présent manuel.
2. Le système de chauffage ne doit être utilisé que dans les emplacements dangereux indiqués sur la plaque signalétique du système.
3. Le système de chauffage est destiné exclusivement à un usage à l'intérieur, dans un endroit sec. Ne pas immerger dans l'eau. Ne pas stocker ou utiliser dans des zones exposées à la pluie ou à la neige.
4. Le système de chauffage ne doit être branché et entretenu que par un électricien qualifié et expérimenté en matière de matériel destiné à des emplacements dangereux.
5. L'installation, la mise en place de la tuyauterie et le câblage du système de chauffage doivent être conformes à tous les codes applicables.
6. Il est essentiel que tout aérotherme destiné à être utilisé dans des emplacements dangereux (classés) soit équipé d'un moteur électrique homologué pour une utilisation de ce type, et que la température du fluide caloporteur soit inférieure à la température d'inflammation de l'atmosphère. Se référer aux codes de l'électricité applicables pour obtenir des renseignements complémentaires.
7. Débrancher le système de chauffage de la source d'alimentation électrique au niveau du sectionneur intégré ou du coffret à fusibles avant d'ouvrir les coffrets ou de réparer le système de chauffage. Verrouiller l'interrupteur en position « ARRÊT » (ouvert) et/ou étiqueter ce dernier pour empêcher toute mise sous tension inattendue. SI LE SECTIONNEUR INTÉGRÉ FAIT L'OBJET D'UNE RÉPARATION, vérifier que l'alimentation a été coupée au niveau du coffret à fusibles ou du panneau principal. Verrouiller l'interrupteur en position « ARRÊT » (ouvert) et/ou étiqueter ce dernier pour empêcher toute mise sous tension inattendue.
8. Ne pas utiliser le système de chauffage dans des atmosphères qui ont un effet corrosif sur l'acier ou l'aluminium, sauf s'il a été recouvert d'un revêtement protecteur approuvé par le fabricant.
9. Pour une utilisation avec de la vapeur, utiliser exclusivement les modèles à un passage. Se référer au codage du modèle (page 7) pour connaître le nombre de passages de l'échangeur thermique.
10. Consulter la plaque signalétique de l'échangeur thermique pour connaître les limites de pression et de température.
11. Le système de chauffage doit être propre en permanence. Lorsque le système de chauffage est utilisé dans un environnement sale, nettoyer régulièrement les tuyaux à ailettes, le ventilateur et la grille de protection. Suivre les recommandations en matière de procédures d'entretien. Consulter la partie intitulée « Liste de contrôle de l'entretien du système de chauffage » pour obtenir de l'information détaillée.
12. Utiliser uniquement les pièces de rechange approuvées par le fabricant.
13. Pour toute question ou inquiétude concernant ce système de chauffage, contacter le fabricant. Se reporter à la dernière page du présent manuel pour obtenir des renseignements détaillés.
14. Les fluides de chauffage, de ventilation et de conditionnement d'air doivent être non inflammables, non compressibles, non explosifs et non toxiques.
15. Ne pas utiliser le système de chauffage si l'une des grilles d'aération est entièrement fermée ou dépasse sa butée.
16. Ne pas utiliser le système de chauffage à des températures ambiantes supérieures à 104 °F (40 °C).
17. Consulter les codes de l'électricité applicables pour connaître les exigences en matière d'étanchéité dans les conduits installés sur place. Les conduits installés en usine ne requièrent aucune mesure d'étanchéité supplémentaire.
18. La base du système de chauffage doit être installée à une hauteur minimale de 7,9 pi (2,4 m) au-dessus du sol. Se reporter à la partie intitulée « Installation » pour obtenir des renseignements détaillés.

LA GARANTIE SERA ANNULÉE
SI CES DIRECTIVES NE SONT PAS SUIVIES

INSTALLATION

Les directives d'installation donnent une idée générale de l'installation et du câblage de l'aérotherme. Se conformer à tous les codes en vigueur.

INSTALLATION MÉCANIQUE

POSITIONNEMENT

1. Pour un chauffage optimal, installer l'aérotherme comme suit :
   a. S'assurer qu'il n'y a aucune obstruction nuisant à l'arrivée d'air ou à la sortie d'air de l'aérotherme.
   b. Diriger la sortie d'air vers les espaces ouverts et non vers les personnes.
   c. Ne pas diriger la sortie d'air vers un thermostat.
   d. Diriger la sortie d'air vers les zones de déperdition thermique, comme les portes ou les fenêtres (voir la figure 1).
   e. Diriger la sortie d'air sur un petit angle le long des murs extérieurs (voir la figure 1).
   f. Pour protéger un équipement contre le gel, la sortie d'air doit être dirigée vers cet équipement.
   g. Les sorties d'air doivent être complémentaires et créer un courant circulaire. Il n'est pas nécessaire que le jet d'air d'un aérotherme atteigne le prochain aérotherme.
   h. Pour les entrepôts ou ateliers à grande surface, on peut utiliser des aérothermes plus gros et moins nombreux.

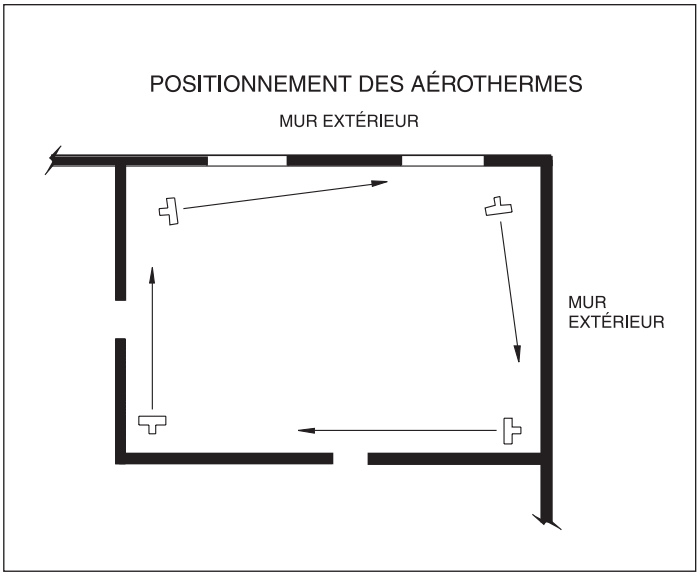

FIGURE 1

INSTALLATION

1. Cet aérotherme est conçu pour être installé en position verticale et de niveau. Cependant, il peut être installé dans n'importe quelle position, pourvu qu'en utilisant la vapeur, l'entrée soit située au-dessus de la sortie, et que le bas de l'échangeur de chaleur puisse drainer vers la sortie.
2. Le boîtier d'aérotherme doit être vissé par le haut ou par le bas, en utilisant des boulons de 1/2 po (14 mm). Pour les dimensions d'aérotherme, voir la figure 2 (unités à un seul ventilateur) ou la figure 3 (unités de 24 po en tandem).
3. La structure de la surface d'installation doit être suffisamment solide pour :
   a. supporter le poids de l'aérotherme (voir la section « Spécifications »);
   b. offrir suffisamment de rigidité pour éviter les vibrations excessives; et
   c. résister aux chocs comme ceux subis dans les installations mobiles des réchauffeurs.
4. Afin de faciliter l'installation, plusieurs types de trousses de montage sont disponibles auprès du fabricant.

DIM		AH-12A	AH-16A	AH-20A	AH-24A
A	po	15-13/16	19-13/16	23-13/16	27-7/8
	mm	401	503	605	707
B	po	19-7/16	23-1/2	27-1/2	31-1/2
	mm	494	596	698	800
C	po	4-3/16	4-3/16	4-3/16	4-3/16
	mm	107	107	107	107
D	po	7-15/16	7-9/16	7-3/16	6-7/8
	mm	201	192	183	174
E	po	23-5/8	23-5/8	23-5/8	23-5/8
	mm	600	600	600	600
F	po	18-3/16	22-3/16	26-3/16	30-3/16
	mm	462	564	665	766
G	po	9/16	9/16	9/16	9/16
	mm	14.3	14.3	14.3	14.3
H	po	23-7/8	27-7/8	31-7/8	35-7/8
	mm	606.5	708.5	809.5	911.5
I	po	1-9/16	1-9/16	1-9/16	1-9/16
	mm	39	39	39	39
J	po	5/8	5/8	5/8	5/8
	mm	16	16	16	16
K	po	27-1/2	31-5/8	35-1/2	39-5/8
	mm	698.5	802.5	903	1005

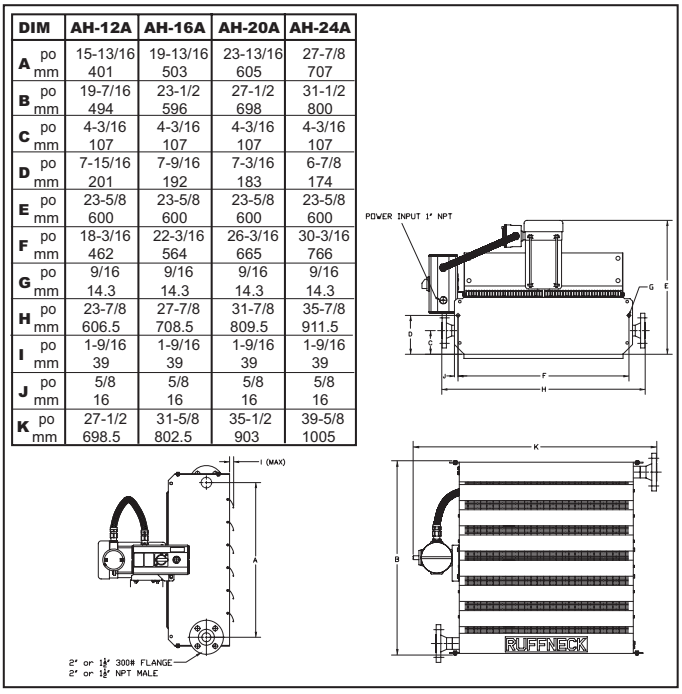

FIGURE 2

AH-24B Tandem		
A	po	52-15/16
	mm	1345
B	po	31-1/2
	mm	800
C	po	4-13/16
	mm	122
D	po	7-7/16
	mm	189
E	po	24-3/16
	mm	615
F	po	58-1/4
	mm	1480
G	po	9/16
	mm	14.3
H	po	36-7/8
	mm	937
I	po	2-1/16
	mm	53
J	po	5/8
	mm	16
K	po	59-1/2
	mm	1512
L	po	65-1/2
	mm	1662.5

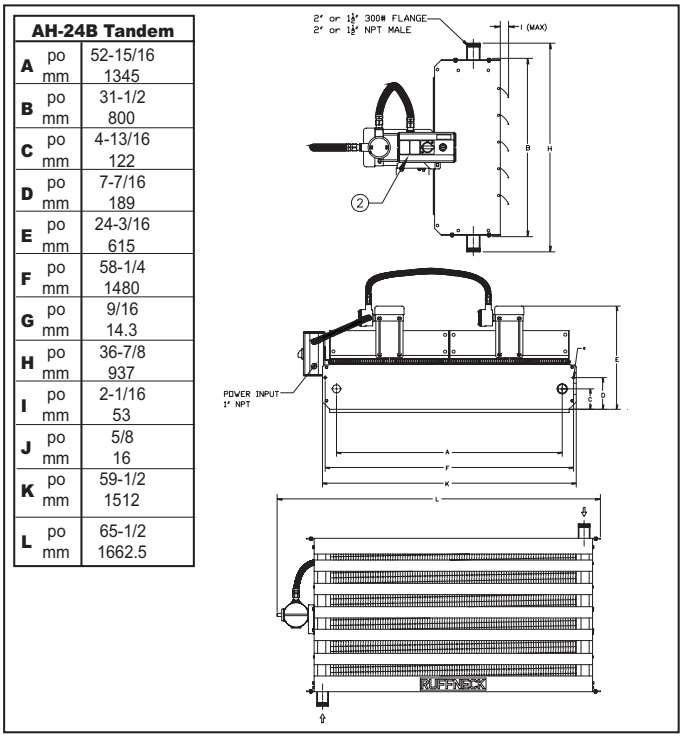

FIGURE 3

HAUTEUR D'INSTALLATION

1. La base du système de chauffage doit être installée à une hauteur minimale de 7,9 pi (2,4 m) au-dessus du sol.
2. Les aérothermes peuvent être installés plus haut et fournir quand même un apport d'air chaud au niveau du plancher. La hauteur maximale à laquelle l'air chaud peut atteindre le plancher dépend du lieu et des conditions de fonctionnement.
3. Les lames déflectrices peuvent être ajustées pour projeter l'air davantage vers le plancher. L'angle de fermeture des lames déflectrices ne doit pas dépasser 75° à partir de l'horizontale.

DÉGAGEMENT AUTOUR DE L'AÉROTHERME

1. Laisser un dégagement minimal de 20 po (500 mm) entre l'arrière du moteur et l'obstacle le plus proche. 2. Un dégagement équivalent à la hauteur totale de l'aérotherme est requis, en haut ou en bas de l'aérotherme, pour permettre un remplacement facile du ventilateur ou du moteur.

RÉGULATION DE TEMPÉRATURE

1. Au besoin, la régulation de température de l'aérotherme peut être faite par thermostat, comme suit :
   a. Le débit d'air à travers l'échangeur de chaleur peut être coupé ou rétabli par commande thermostatique du moteur de ventilateur. Habituellement, on laisse circuler le fluide caloporteur dans l'échangeur de chaleur sans interruption. C'est la méthode de régulation d'aérotherme la plus économique.
   b. Le débit de fluide caloporteur peut être commandé par soupape thermostatique, permettant un fonctionnement continuel du moteur de ventilateur pour maintenir la circulation d'air dans le local.
   c. Pour une régulation absolue de température de sortie de l'aérotherme à partir de l'échangeur de chaleur, on doit pouvoir arrêter le ventilateur et couper le débit de fluide caloporteur. Pour ce faire, on utilise une commande à soupape thermostatique combinée à la régulation thermostatique du ventilateur.

INSPECTION FINALE

1. Avant de mettre sous tension :
   a. S'assurer que toutes les connexions sont serrées et que l'installation est conforme au schéma de câblage pertinent (voir la figure 7) et aux exigences des codes.
   b. S'assurer que l'alimentation électrique est compatible avec la puissance nominale de l'aérotherme, indiquée sur la plaque signalétique du moteur.
   c. Retirer tout corps étranger de l'intérieur de l'aérotherme.
   d. S'assurer que tous les couvercles des boîtiers électriques sont bien fermés.
   e. S'assurer que le ventilateur tourne librement, que l'air sort par les lames déflectrices et que le ventilateur tourne en sens inverse des aiguilles d'une montre, vu de l'arrière de l'aérotherme.

INSTALLATION DE TUYAUTERIE

1. Pour utilisation sur système de vapeur, n'utiliser que des aérothermes à une seule passe. Se référer à la section « Codage de modèle » pour connaître le nombre de passestube.
2. Les installations typiques de tuyauterie sont illustrées aux figures 4 à 6.
3. Pour empêcher que le condensat n'entre dans l'aérotherme, diriger la pente descendante du tuyau d'alimentation de vapeur vers la conduite de vapeur principale. Pour les longs tuyaux d'alimentation, des clapets d'évacuation peuvent être requis.
4. Pour les systèmes de vapeur, utiliser des purgeurs de vapeur à drainage continu (ex. à flotteur ou thermostatiques), dimensionnés selon les débits de vapeur en service et au démarrage.
5. Si la conduite principale de retour du condensat est pressurisée ou située plus haut que la sortie de l'aérotherme, installer un clapet de non-retour après le purgeur de vapeur, et un robinet de vidange à la crépine pour drainer le système en période d'inutilisation.
6. Assurer un sous-refroidissement et drainage du condensat efficaces en conservant le plein diamètre du tuyau de sortie entre l'aérotherme et le purgeur de vapeur. Prévoir une chute de hauteur minimale de 10 po (25,4 cm) à la sortie du condensat de l'aérotherme.
7. Pour les conduites horizontales de vapeur et de condensat, utiliser seulement des raccords réducteurs excentrés. 8. Prévoir de l'espace en raison de l'élargissement de la tuyauterie.
9. Prévoir des supports adéquats pour réduire les contraintes dans la tuyauterie. L'aérotherme ne doit pas servir de support.
10. Toute la tuyauterie doit être dimensionnée adéquatement en fonction des débits prévus.
11. Pour plus de renseignements sur la tuyauterie, consulter les manuels techniques de tuyauterie industrielle.
12. Respecter tous les codes de tuyauterie en vigueur.

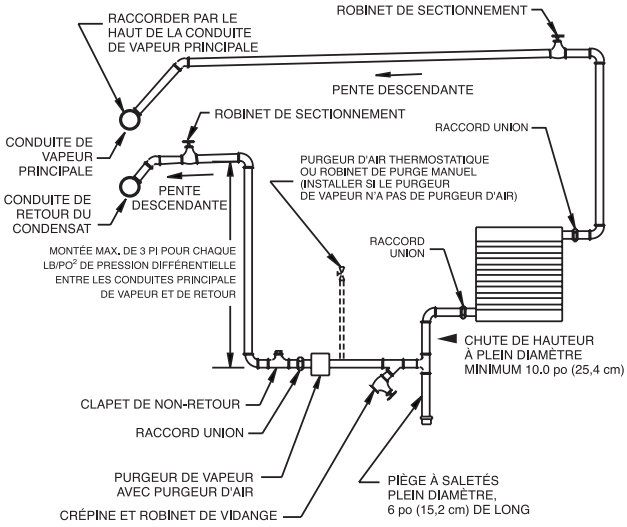

REMARQUES : 1. Cet arrangement de tuyauterie est seulement pour la ommande par tout ou rien. Avec une régulation modulante de vapeur, la pression de vapeur pourrait être insuffisante pour faire monter le condensat dans la conduite principale de retour.
2. Ne pas utiliser avec des fluides corrosifs pour l'acier.
3. Suivre les normes d'installation de tuyauterie appropriées.
4. Pour les sections de tuyauterie horizontales, utiliser seulement des raccords réducteurs excentrés.
5. Utiliser un purgeur de vapeur de dimension adéquate.

Connexions de l'aérotherme aux conduites suspendues de liquide caloporteur

FIGURE 4

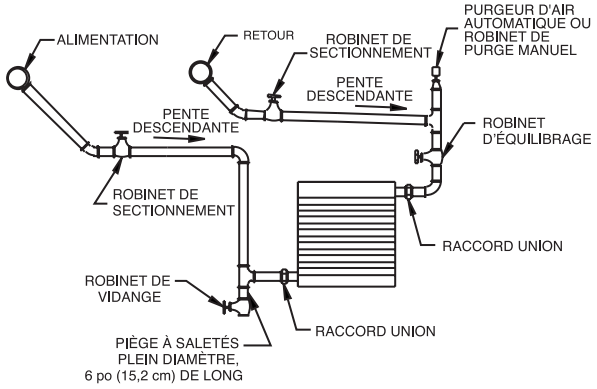

REMARQUES : 1. Ne pas utiliser avec des fluides corrosifs pour l'acier.
2. Suivre les normes d'installation de tuyauterie appropriées.

Connexions de l'aérotherme aux conduites suspendues de liquide caloporteur

FIGURE 5

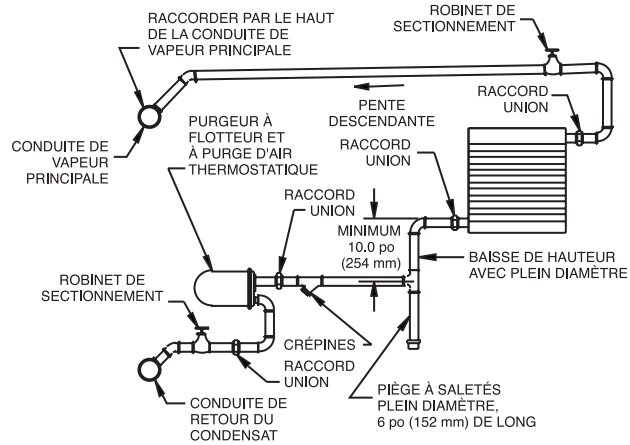

REMARQUES : 1. Pour les systèmes de moyenne à haute pression, un purgeur à flotteur (ouvert ou fermé) doit être utilisé.
2. Ne pas utiliser avec des fluides corrosifs pour l'acier.
3. Suivre les normes d'installation de tuyauterie appropriées.
4. Pour les sections de tuyauterie horizontales, n'utiliser que des raccords réducteurs excentrés.
5. Utiliser un purgeur de vapeur de dimension adéquate.

Connexions de l'aérotherme aux systèmes de vapeur basse pression, atmosphérique à gravité ou à retour sous vide

FIGURE 6

SCHÉMAS DE CÂBLAGE DU MOTEUR

AVERTISSEMENT

L'installation de l'aérotherme doit être effectuée par un personnel qualifié et doit être conforme à tous les codes électriques locaux. Pour le filage et câblage interne des appareils de régulation et démarreurs, consulter les fabricants de ces appareils.

Le thermostat doit avoir des caractéristiques électriques équivalentes ou supérieures à celles des appareils de régulation. Pour le câblage du moteur de ventilateur, se référer à la plaque signalétique du moteur. Ces câbles et fils doivent être connectés en série avec l'unité de commande du moteur.

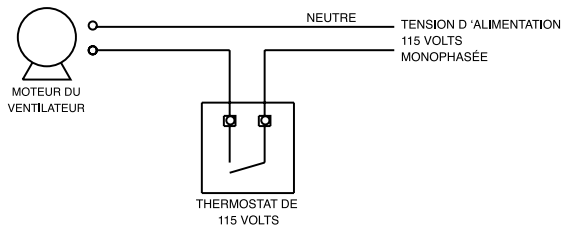

RÉGULATION THERMOSTATIQUE POUR MOTEURS MONOPHASÉS DE 115 VOLTS

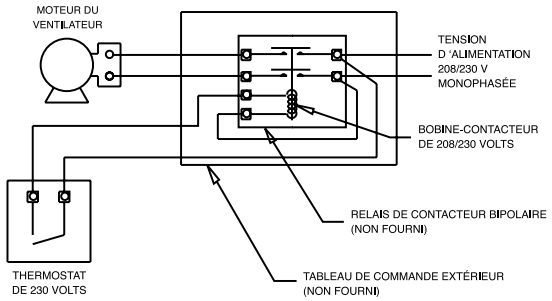

RÉGULATION THERMOSTATIQUE POUR MOTEURS MONOPHASÉS DE 208/230 VOLTS

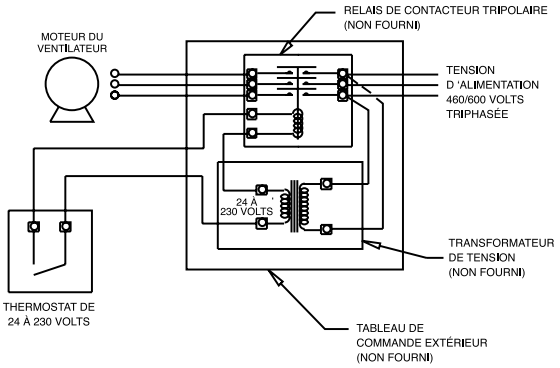

RÉGULATION THERMOSTATIQUE POUR MOTEURS TRIPHASÉS DE 460/600 VOLTS

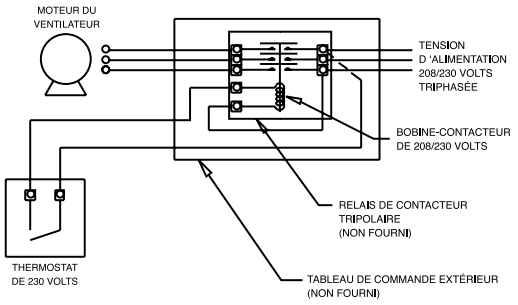

RÉGULATION THERMOSTATIQUE POUR MOTEURS TRIPHASÉS DE 208/230 VOLTS

SCHÉMA DE CÂBLAGE DES SYSTÈMES DE CHAUFFAGE AVEC SECTIONNEUR INTÉGRÉ

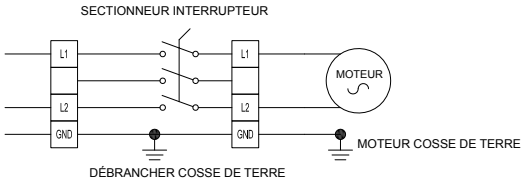

MONOPHASÉ

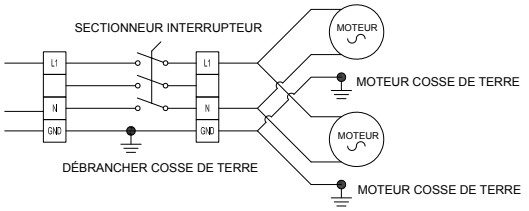

Appareil à moteur tandem
MONOPHASÉ

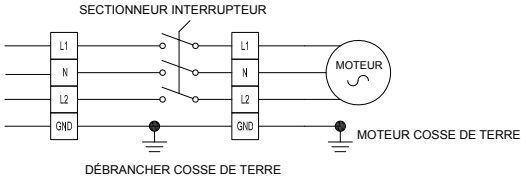

Appareil à moteur seul
TRIPHASÉ

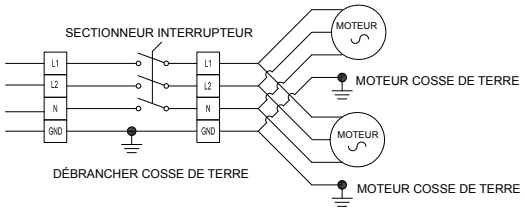

Appareil à moteur tandem
TRIPHASÉ

CODAGE DE MODÈLE

Modèle de base

Série	Ventilateur	Échangeur de chaleur				Boîtier		Moteur			
AH	–	12A	–	A	1	A	1	–	A	1	–	1	A	–	D

VENTILATEUR	
12 po	12A
16 po	16A
20 po	20A
24 po	24A
24 po tandem	24B ⑥
A = Ventilateur simple standard B = Ventilateur double standard	

TUYAUX À AILETTES Voir la page 5						
TUBE	ÉPAISSEUR DE PAROI	RANGÉES	AILETTES			
			AILETTES POUCE	MATÉRIAU	TYPE	
5/8 po	.065 po	3	10	AL	TW	**A**
1 po	.083 po	2	9	AL	EX	**B**
1 po	.135 po	2	5	AL	EX	**C**
TW = Ailettes tensionnées (« Tension Wound ») EX = Extrudé AL = Aluminum						

TUBE	
1 Passé	1
3 Passes	3
5 Passes	5 ⑧
7 Passes	7 ⑨

RACCORDS	
Vissé mâle 1 1/2 po NPT Sch. 40	A
Bride RF 1 1/2 po, 300 lb/po² (RF = face surélevée)	B
Vissé mâle 2 po NPT Sch. 80 C	C
Bride RF 2 po, 300 lb/po² (RF = face surélevée)	D

REVÊTEMENT DE L'ÉCHANGEUR		
Peinture à l'aluminum résistante à la chaleur	1	
Revêtement phénolique Heresite®	2	①

	SPÉCIFICATIONS ÉLECTRIQUES DU MOTEUR			
		VOLTS	PHASES	HERTZ
	A	115	1	60
⑤	B	208	1	60
⑤	C	208	3	60
	D	230	1	60
	E	230	3	60
③	F	460	1	60
	G	460	3	60
	H	575	3	60
	I	220	1	60
	J	380	3	60
③	K	440	3	60

④

⑩ Sectionneur intégré

HOMOLOGATION DU SYSTÈME DE CHAUFFAGE	
1	Usage général
⑦ 2	Antidéflagrante, groupes C, D, E, F et G
3	Système de chauffage homologué CSA

PROJECTION D'AIR	
1	Lames déflectrices en aluminum bidirectionnelles

MATÉRIAU DU BOÎTIER	
A	Acier au carbone à revêtement en poudre d'époxy
①② B	Acier au carbone à revêtement phénolique Heresite®

REMARQUE:
Ruffneck[MC] utiliser Doerr/Emerson/Baldor comme moteur standard. L'utilisation d'une autre marque de moteur prolongerait les délais d'approvisionnement. Tous les échangeurs de chaleur ont un numéro d'enregistrement canadien OH10951.2C. Leur utilisation est autorisée dans toutes les provinces et territoires du Canada.

① Contacter l'usine pour devis pour les échangeurs et les boîtiers à revêtement en Heresite®.
② Les lames déflectrices et les pales de ventilateur ont aussi un revêtement en Heresite®.
③ Communiquer avec le fabricant pour les délais d'approvisionnement.
④ Moteur conçu pour fonctionner à la tension nominale (limites de ± 15 %.)
⑤ Même si la plaque du moteur indique 230 volts, il peut être utilisé à 208 volts.
⑥ Configuration Tandem n'est pas disponible sur les modèles AV.
⑦ Les moteurs 460V 1Ø sont seulement certifiés pour les groupes D, F et G
⑧ Seulement disponible en 16 "(406 mm) et les plus grandes unités
⑨ Seulement disponible en 24 "(610 mm) et les plus grandes unités
⑩ Interrupteur principal intégré seulement disponible avec les réchauffeurs Certifié CSA

RÉPARATION ET REMPLACEMENT

AVERTISSEMENT

Seul un personnel qualifié et expérimenté avec les appareils de chauffage peut effectuer la maintenance de cet aérotherme. Couper l'alimentation électrique de l'aérotherme avant d'effectuer la maintenance de l'aérotherme. Régler l'interrupteur à la position OFF (arrêt) ou l'étiqueter pour empêcher tout branchement accidentel. Les surfaces de l'aérotherme peuvent être chaudes.

1. Après avoir réparé un composant
   a. Vérifier la qualité et le serrage des connexions électriques.
   b. Retirer tout corps étranger de l'intérieur des boîtiers.
   c. Installer et bien fixer tous les couvercles.
   d. S'assurer que toutes les attaches soient bien serrées.
   e. Retirer tout corps étranger de l'intérieur de l'aérotherme.
   f. S'assurer que l'air sort par les lames déflectrices et que les pales du ventilateur tournent dans le sens inverse des aiguilles d'une montre lorsqu'on regarde de l'arrière de l'aérotherme (voir la figure 9).

MOTEUR, VENTILATEUR ET GRILLE DE PROTECTION

1. Retirer les boulons retenant le moteur au support du moteur.
2. Retirer la grille de protection en deux parties (voir la figure 10).
3. Soulever et retirer le moteur du support de moteur.
4. Avant de retirer le ventilateur, mesurer et noter la position du moyeu du ventilateur sur l'arbre du moteur (voir la figure 11). Si le ventilateur est difficile à enlever, utiliser un extracteur d'engrenage sur le moyeu de l'hélice.
5. Pour réinstaller, placer le ventilateur sur l'arbre du moteur et serrer les vis de retenue.
6. Placer le moteur sur son support et fixer la grille de protection au boîtier.
7. Centrer le ventilateur dans l'ouverture de l'enveloppe. Laisser un écart d'environ 1/16 po à 3/16 po (1,6 mm à 4,8 mm) entre le moteur et la grille de protection (voir la figure 8).
8. Boulonner le moteur à son support. Avant de rétablir l'alimentation électrique, faire tourner à la main les pales du ventilateur pour s'assurer qu'elles tournent librement.
9. L'air doit sortir par les lames déflectrices et le ventilateur doit tourner dans le sens inverse des aiguilles d'une montre lorsqu'on regarde de l'arrière de l'aérotherme (voir la figure 9).

DÉMONTAGE DE L'ÉCHANGEUR - AÉROTHERMES À 1 MOTEUR

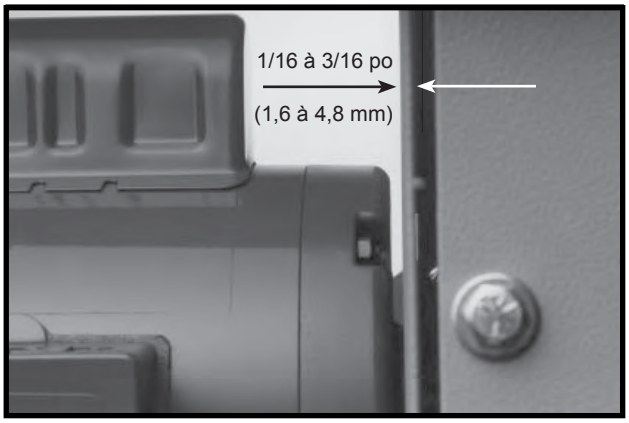

FIGURE 8

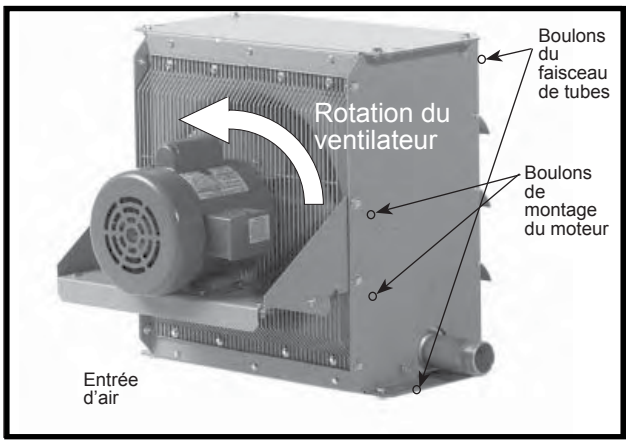

FIGURE 9

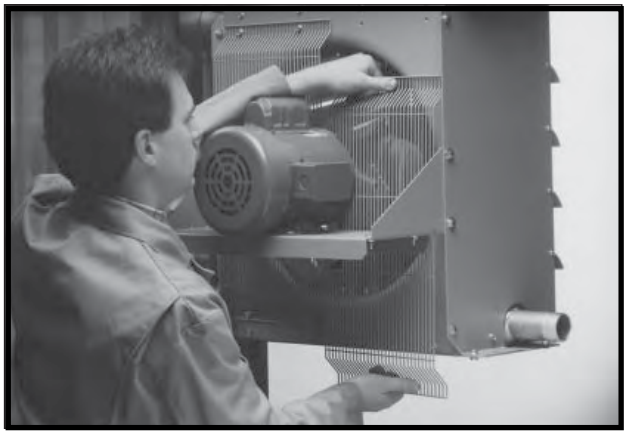

FIGURE 10

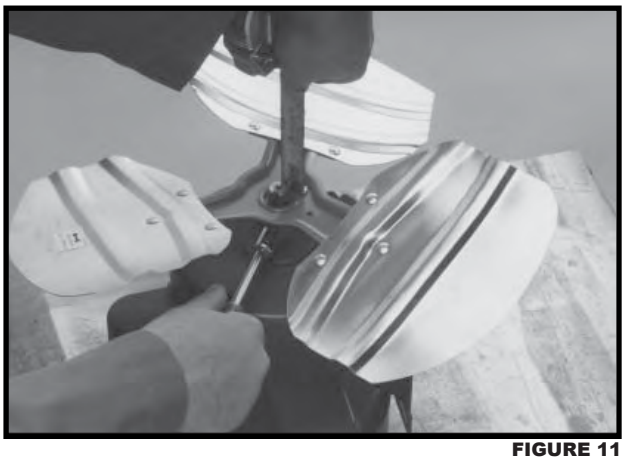

FIGURE 11

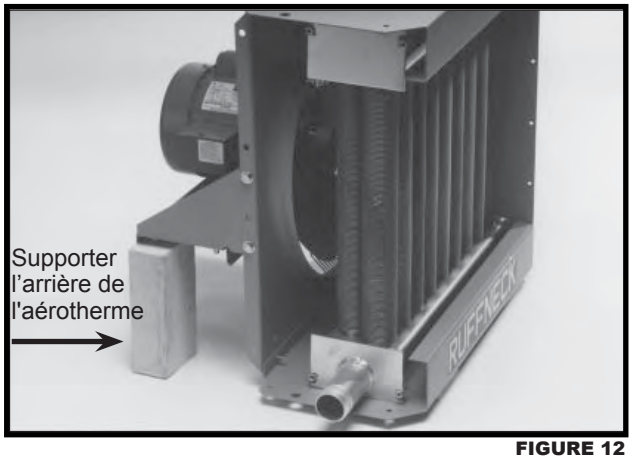

FIGURE 12

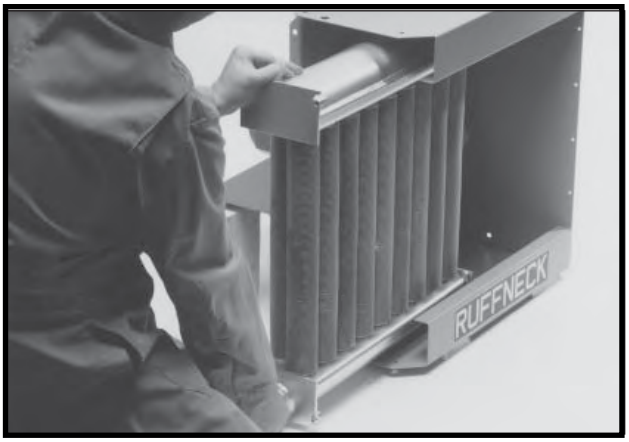

FIGURE 13



FIGURE 14



FIGURE 15



FIGURE 16

DÉMONTAGE DE L'ÉCHANGEUR - AÉROTHERMES À 1 MOTEURS

1. Enlever l'aérotherme de sa position d'utilisation et le poser sur une surface de travail stable.
2. Retirer toutes les lames déflectrices à l'avant du boîtier.
3. Retirer la grille de protection gauche du ventilateur et le panneau latéral gauche du boîtier tel que décrit ci-après. Si l'échangeur de chaleur a des raccords à brides, retirer aussi le panneau supérieur du boîtier.
4. Tout en supportant le poids de l'échangeur de chaleur par le raccord de tuyauterie, retirer les 4 boulons du faisceau retenant l'échangeur au boîtier (voir la figure 9). Déposer l'échangeur de chaleur sur le fond du boîtier.
5. Tout en supportant la base du moteur, retirer les deux boulons retenant la base du moteur au panneau latéral gauche du boîtier. Après avoir retiré ce panneau, réinsérer les boulons dans la base du moteur. Placer un support sous la base du moteur pour empêcher le boîtier de basculer lors du démontage de l'échangeur de chaleur (voir la figure 12).
6. Quand le panneau latéral du boîtier est enlevé, supporter la base du moteur pour sortir l'échangeur de chaleur du boîtier en le glissant (voir la figure 13). Pour les gros aérothermes, l'aide d'une autre personne peut être nécessaire à cause du poids de l'échangeur.
7. Pour réinstaller l'échangeur de chaleur dans le boîtier, inverser l'ordre de la procédure de démontage.

DÉMONTAGE DE L'ÉCHANGEUR - AÉROTHERMES À 2 MOTEURS(

(En raison du poids de l'échangeur de chaleur, il est recommandé d'avoir un assistant pour effectuer la procédure suivante.)

1. Enlever l'aérotherme de sa position d'utilisation et le poser sur une surface de travail stable. Pour éviter d'endommager les raccords de tuyauterie du bas, ne pas déposer l'échangeur de chaleur sur ces raccords.
2. Retirer toutes les lames déflectrices à l'avant de l'aérotherme.
3. Enlever le panneau supérieur du boîtier en retirant les boulons aux quatre coins ainsi que les attaches au haut de l'enveloppe (voir la figure 14).
4. Demander à un assistant de supporter le poids de l'échangeur de chaleur au moment de retirer les 8 boulons retenant l'échangeur au boîtier (voir la figure 15). Après avoir retiré les boulons d'un côté, déposer ce côté de l'échangeur sur le fond du boîtier. Placer un support sous la base du moteur pour empêcher le boîtier de basculer lors du démontage de l'échangeur (voir la figure 14).
5. Desserrer les attaches du panneau latéral du boîtier, mais sans les retirer. Si l'échangeur de chaleur a des raccords à brides, retirer aussi le panneau latéral gauche.
6. Soulever l'échangeur de chaleur pour le sortir par l'avant du boîtier (voir la figure 16).
7. Pour réinstaller l'échangeur de chaleur dans le boîtier, inverser l'ordre de la procédure de démontage.

PARTS LIST

AH - 12A, - 16A, - 20A, et - 24A

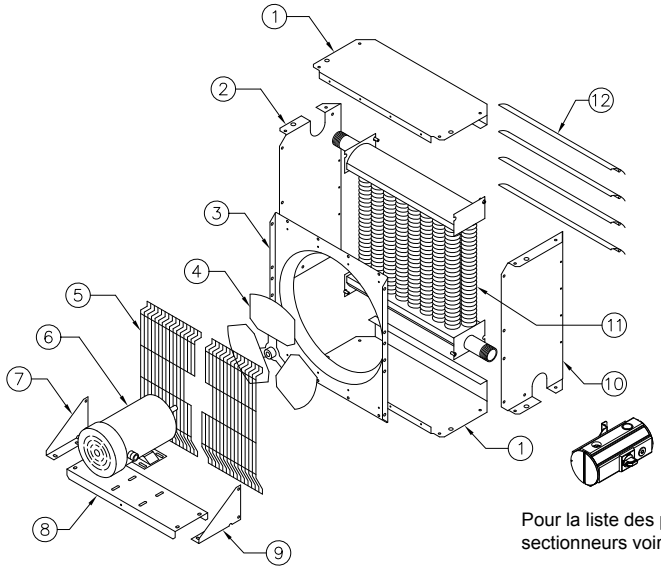

Pour la liste des pièces sectionneurs voir figure 19

FIGURE 17

ARTICLE	AH-12A	AH-16A	AH - 20A	AH-24A	AH-24B	DESCRIPTION
1	5378	5382	5386	5390	5394	Panneau AH, supérieur/inférieur
2	5376	5380	5384	5388	5392	Panneau AH, côté droit
3	5379	5383	5387	5391	5391	Panneau AH, enveloppe
4	5448	5449	5450	5451	5451	Ventilateur
5	4087	4088	4089	5396	5396	Grille de protection (moitié)
6	***	***	***	***	***	Moteur
7	3789	3789	3789	3789	3789	Cornière, base du moteur, droite
8	3785	3787	3787	5433	5433	Profilé en U, base du moteur
9	3788	3788	3788	3788	3788	Cornière, base du moteur, gauche
10	5377	5381	5385	5389	5393	Panneau AH, côté gauche
11	**	**	**	**	**	Échangeur de chaleur
12	4075	4076	4077	5741	5742	Lames déflectrices et vis

** Pour commander un échangeur de chaleur de rechange, spécifier les numéros de modèle et de série de l'aérotherme.
*** Pour commander un moteur de rechange, spécifier la tension, le nombre de phases, la puissance (HP) et la classe d'utilisation.
Remarque : Pour les articles non montrés, communiquer avec le fabricant.

AH - 24B

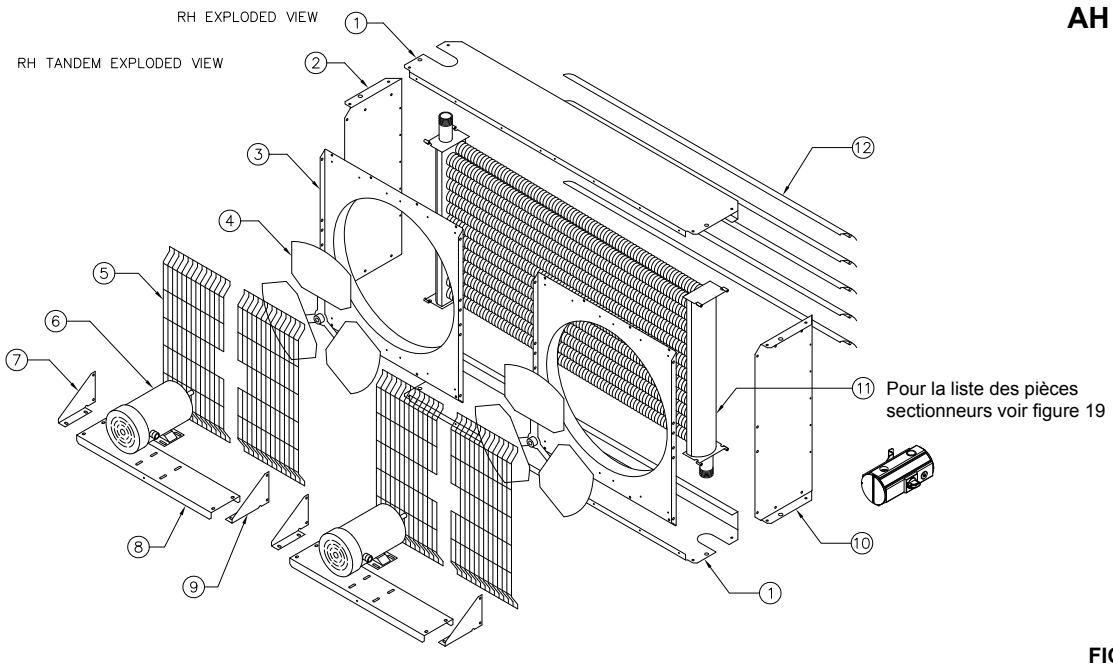

Pour la liste des pièces sectionneurs voir figure 19

FIGURE 18

Sectionneur XS40

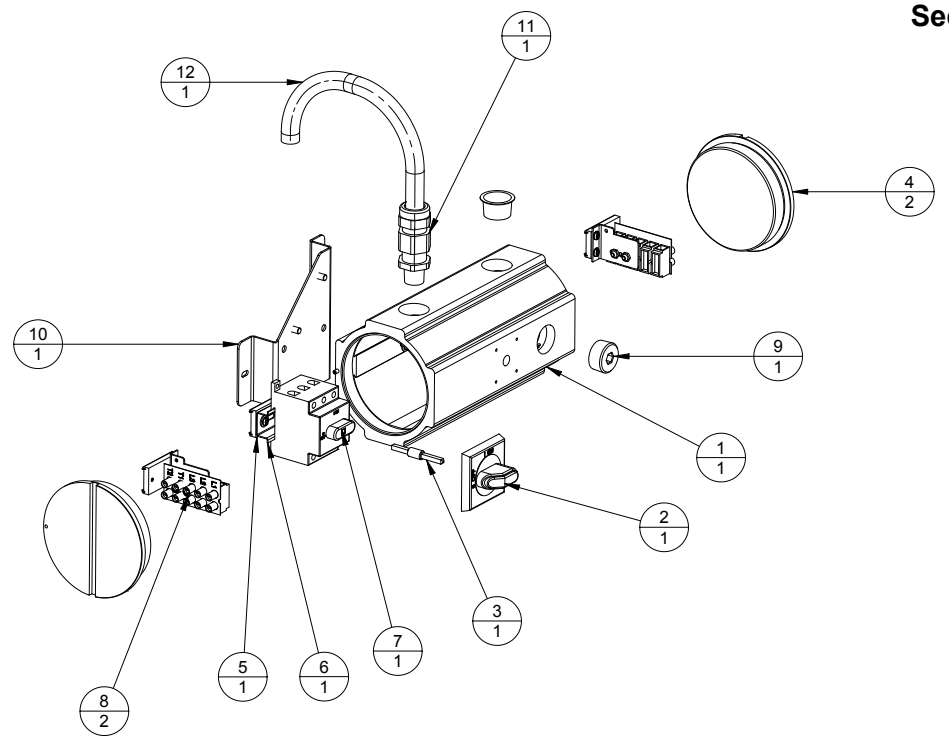

FIGURE 19

ITEM	NUMÉRO DE PIÈCE	DESCRIPTION	QUANTITÉ
1	B16229-03	Boîte à bornes, X-max Series 2	1
2	12147	Poignée du sectionneur	1
3	12241-02	Arbre d’entraînement	1
4	B12334-01	Couvercle de la boîte à bornes	2
5	B12676-07	Trolley, sectionneur	1
6	11362	Console, rail DIN	1
7	12112	Interrupteur, sectionneur	1
8	B12676-07	Assemblage du bloc de jonction	2
9	XHP100	Fiche à joint sec 1 po NPT	1
10	11650	Support de fixation	1
11	Contact Manufacturer	Câble, Teck-90HL	1
12	Contact Manufacturer	Raccord, câble Teck	1

SPÉCIFICATIONS GÉNÉRALES

Certification	Catégorie I, divisions 1 et 2, groupes C et D; Catégorie II, divisions 1 et 2, groupes E, F et G CRN (Canada) – Vapeur et liquides pour climatiseurs seulement - CRN OH10951.2C
Ventilateur	Trois pales en aluminium. Porte-pales en acier et moyeu à alésage de 5/8 pouce.
Grille de protection	Modèle deux pièces à mailles rapprochées. Retient tout objet de 3/8 po de diamètre. Revêtement époxyde aux couleurs du boîtier.
Trous de montage	Trous de 9/16 po de diamètre, deux trous au haut et deux trous au bas de l'aérotherme
Matériau du boîtier	Acier de calibre 14 (0.075 po). Revêtement époxyde avec prétraitement en cinq étapes, dont au phosphate de fer.
Moteur(s)	Homologué ACNOR et/ou UL, 1725 tr/min, roulements à billes à lubrification permanente avec base rigide. Antidéflagrant ou de construction d'usage général. Toutes tensions standard disponibles pour 50 et 60 Hertz.
Lames déflectrices	Aluminium anodisé extrudé.
Matériau du collecteur	Acier au carbone de 3/16 po (0.187 po).
Raccords de tuyauterie	Filetage mâle NPT 1 1/2 po, Sch. 40 ou brides RF à face surélevée 1 1/2 po, 300 lb/po^2 Max.
Pression utilisation max.	450 lb/po2. Consulter la partie dédiée aux spécifications du modèle ci-dessous pour prendre connaissance des restrictions.
Temp. utilisation max.	650˚F
Temp. utilisation max.	• Tubes en acier carb., diam. ext. 5/8 po (calibre 16, épaisseur 0.065 po). Ailettes en aluminium tensionnées (« Tension Wound ») à 10 ailettes par pouce, ou • Tubes en acier carb., diam. ext. 1 po (calibre 14, épaisseur 0.083 po). Ailettes en aluminium extrudé à 9 ailettes par pouce; ou • Tubes en acier carb., diam. ext. 1 po (calibre 10, épaisseur 0.135 po). Ailettes en aluminium extrudé à 5 ailettes par pouce.
Sectionneur en option	Sectionneur XS40 compatible avec les moteurs monophasés et triphasés.

Spécifications de modèle

Modèle de base*	Débit d'air**	Portée du jet d'air à vapeur 15 lb/po^2	Puissance de moteur requise***	Passes de tube	Pression maximale autorisée pour les appareils à vapeur †	Poids net Δ	Poids à lèxpédition Δ	Variation du poids net avec sectionneur	Variation du poids d'embarquement avec sectionneur
AH-12A-A__	1 150 pi^3/min	28 pi (8,5m)	1/2 HP	1 ou 3	150 psi	102 lb	142 lb	117 lbs.	167 lbs.
AH-12A-B__	1 160 pi^3/min	28 pi (8,5m)	1/2 HP	1 ou 3	200 psi	107 lb	147 lb	122 lbs.	172 lbs.
AH-12A-C1	1 030 pi^3/min	28 pi (8,5m)	1/2 HP	1	300 psi	118 lb	158 lb	133 lbs.	183 lbs.
AH-16A-A__	1 840 pi^3/min	40 pi (12,2m)	1/2 HP	1, 3 ou 5	135 psi	127 lb	167 lb	142 lbs.	192 lbs.
AH-16A-B__	1 780 pi^3/min	40 pi (12,2m)	1/2 HP	1, 3 ou 5	150 psi	138 lb	178 lb	153 lbs.	203 lbs.
AH-16A-C1	1 840 pi^3/min	40 pi (12,2m)	1/2 HP	1	395 psi	153 lb	193 lb	168 lbs.	218 lbs.
AH-20A-A__	2 930 pi^3/min	40 pi (12,2m)	1/2 HP	1, 3 ou 5	180 psi	155 lb	205 lb	180 lbs.	230 lbs.
AH-20A-B__	2 700 pi^3/min	40 pi (12,2m)	1/2 HP	1, 3 ou 5	140 psi	170 lb	220 lb	195 lbs.	245 lbs.
AH-20A-C1	3 000 pi^3/min	40 pi (12,2m)	1/2 HP	1	450 psi	195 lb	245 lb	210 lbs.	270 lbs.
AH-24A-A__	3 890 pi^3/min	40 pi (12,2m)	1/2 HP	1, 3, 5 ou 7	165 psi	189 lb	249 lb	204 lbs.	274 lbs.
AH-24A-B__	3 640 pi^3/min	40 pi (12,2m)	1/2 HP	1, 3, 5 ou 7	190 psi	212 lb	272 lb	227 lbs.	297 lbs.
AH-24A-C1	3 490 pi^3/min	40 pi (12,2m)	1/2 HP	1	335 psi	258 lb	318 lb	273 lbs.	343 lbs.
AH-24B-A__	7 650 pi^3/min	65 pi (19,8m)	(2) 1/2 HP	1, 3, 5 ou 7	235 psi	313 lb	413 lb	338 lbs.	438 lbs.
AH-24B-B__	7 420 pi^3/min	65 pi (19,8m)	(2) 1/2 HP	1, 3, 5 ou 7	295 psi	376 lb	476 lb	391 lbs.	501 lbs.
AH-24B-C1	6 690 pi^3/min	65 pi (19,8m)	(2) 1/2 HP	1	450 psi	440 lb	540 lb	455 lbs.	565 lbs.

* Voir page 7 pour le codage de modèle.
** À 70 °F et au niveau de la mer.
*** Ruffneck se réserve le droit d'installer des moteurs de plus grande puissance (HP).
Δ Ajouter 12 lb pour les aérothermes avec raccords à brides.
† Des restrictions de pression sont certifiés CSA pour les chauffe seulement.

REMARQUES

GARANTIE LIMITÉE DE 1 AN

Les aérothermes à échangeur de chaleur de série AH (Advanced Horizontal) sont garantis contre tout défaut de fabrication et de main-d'oeuvre pour une période d'un (1) an à partir de la date d'achat, selon les modalités suivantes :

1. Nous fournirons, à nos frais, les pièces de rechange requises pour remettre tout aérotherme en état de fonctionnement, à condition que les pièces défectueuses nous soient retournées fret payé d'avance et que les pièces de rechange soient acceptées avec port dû.
2. L'aérotherme complet peut être retourné à notre usine pour être réparé ou remplacé (selon notre décision), à condition que tous les frais d'expédition impliqués soient assumés par le client.
3. La corrosion et la contamination dues à la saleté, à la poussière ou autres, ne sont pas considérées comme des défectuosités et ne sont donc pas couvertes par la garantie.
4. L'aérotherme ne doit être modifié d'aucune façon.
5. L'aérotherme doit être installé, utilisé et entreposé conformément aux directives du guide d'utilisation et aux directives des étiquettes et plaquettes signalétiques. La présente garantie se limite à cet équipement et, en aucun cas, ne couvre les coûts d'installation ou de démontage, ou tout dommage ou perte encourus.

CLASSIFICATION

Les aérothermes AH RuffneckTM peuvent tous être livrés avec un moteur antidéflagrant homologué ACNOR ou UL pour utilisation dans des endroits dangereux. Moteurs de divisions 1 et 2, classe I, groupes C et D et classe II, groupes E, F et G ou usage général. S'assurer que le moteur est conforme aux exigences de classification.

RESPECTER LES DIRECTIVES DU PRÉSENT GUIDE
pour éviter tout danger et l'annulation de certaines dispositions de la garantie.
Pour toute assistance supplémentaire, composer ce numéro :

Ligne sans frais (24 h) : 1-800-661-8529

(Canada et É.-U.)

Avant d'appeler, vérifier les numéros de modèle et de série.

Ruffneck[MC]
Chauffages pour les environnements les plus rigoureux

CCI Thermal Technologies INC.
Solutions de chauffage et de filtration

5918 Roper Road
Edmonton, Alberta T6B 3E1 Canada
Téléphone : (780) 466-3178
Télécopieur : (780) 468-5904
www.ccithermal.com

Ruffneck™
Heaters for the Harshest Environments

Certified System™
ISO 9001

Owner's Manual

EFX

Explosion-Proof Exhaust Fan

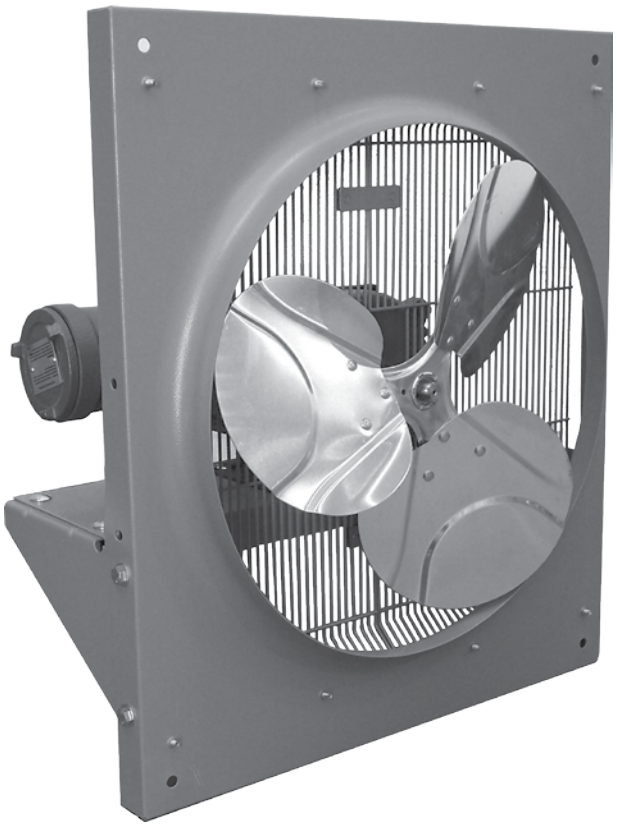

This manual covers installations, maintenance, repair and replacement parts.

WARNING!
READ ALL IMPORTANT NOTICES ON PAGE 3.
PLEASE ADHERE TO INSTRUCTIONS PUBLISHED IN THIS MANUAL.
Failure to do so may be dangerous and may void certain provisions of your warranty.

Ruffneck™ is a key brand of CCI Thermal Technologies Inc.
Copyright © 2013. All rights reserved.

Part No. **10356.Rev.1.02**

Printed in Canada

Photocopy this page for reuse

FAN MAINTENANCE CHECKLIST

For Explosion-Proof Exhaust Fan

WARNING

Fan should only be serviced by qualified personnel with HVAC equipment experience. Disconnect fan from power supply before servicing fan. Lock the switch in the "OFF" (open) position and/or tag the switch to prevent unexpected power application.

PERIODIC (before and as required during heating season)

1. **CLEAN**
   - Fan
   - Fan Guard
   - Motor
   - Backdraft Dampers
   - Stormhood

2. **CHECK**
   - Motor for smooth, quiet operation
   - Dampers for proper angle and tightness

Remove dust using compressed air. Do not spray with water or solvents.

ANNUAL (before heating season)

1. ELECTRICAL

Check all terminal connections and conductors. Tighten loose connections. Conductors with damaged insulation must be replaced.

2. MECHANICAL

Check motor shaft bearing play. Replace motor if play is excessive or motor does not run quietly and smoothly. Motor bearings are permanently lubricated.

Check fan. Replace immediately if cracked or damaged.

Check the tightness of all hardware. All nuts and bolts, including mounting hardware, must be tight.

TURN FAN ON FOR A MINIMUM OF 15 MINUTES. Check for air exiting fan through dampers and smooth running of fan motor.

Ruffneck™
Heaters for the Harshest Environments

For assistance, please call
Toll Free: 1-800-661-8529 (24 hrs)
U.S. & Canada

IMPORTANT NOTICES

WARNING:

Read and adhere to the following. Failure to do so may result in severe or fatal injury.

1. Read and follow the instructions in this manual.
2. Fan(s) are to be installed and serviced only by qualified personnel experienced in electrical and HVAC work.
3. Installation and wiring of the fan must adhere to all applicable codes.
4. It is essential that any fan, that will be used in a hazardous (classified) location, is equipped with an electric motor approved for such service.
5. Do not operate fan in atmospheres which are corrosive to steel or aluminum, unless it has been coated with a factory approved protective coating.
6. Fan must be kept clean. When operating in a dirty environment, regularly clean fan and fan guard. Follow the recommended maintenance procedures. Refer to the “Fan Maintenance Checklist” section for details.
7. Use factory approved replacement parts only.
8. If there are any questions or concerns regarding the fan, contact the factory. Refer to the last page of this manual for details.

WARRANTY WILL BE VOID IF INSTRUCTIONS ARE NOT FOLLOWED

INSTALLATION

The installation instructions provide a general guideline for the installation and wiring of the exhaust fan. All applicable codes must be adhered to.

LOCATION

1. For optimum air exhaust, the fan(s) should be installed as follows:
   a. There are no obstructions that may impede the fans air inlet or discharge.
   b. The air discharge is directed away from building.
   c. The air discharge is not directed at a thermostat.
   d. For warehouses or large workshops it may be acceptable to use fewer, larger fans.
2. This unit can exhaust warm or cool air depending on customer conditions. Be aware of problems each can produce.

MOUNTING

1. The Exhaust Fan is designed to be installed in an upright and level position.
2. Fan(s) are designed to be mounted from the rear using four 3/8” holes. For fan dimensions, see Figure 2.
3. The mounting structure must be strong enough to:
   a. Support the fans weight (refer to the specification section).
   b. Provide sufficient stiffness to prevent excessive vibration.
   c. Withstand abusive situations such as transportable installations.
   d. If Exhaust Fan is installed on a wall thinner than 4”, customer will need to install shims to bring face of fan away from mounting surface.

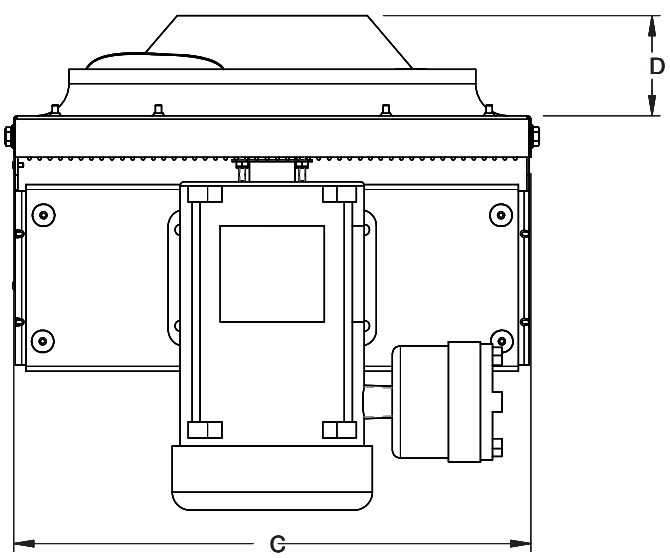

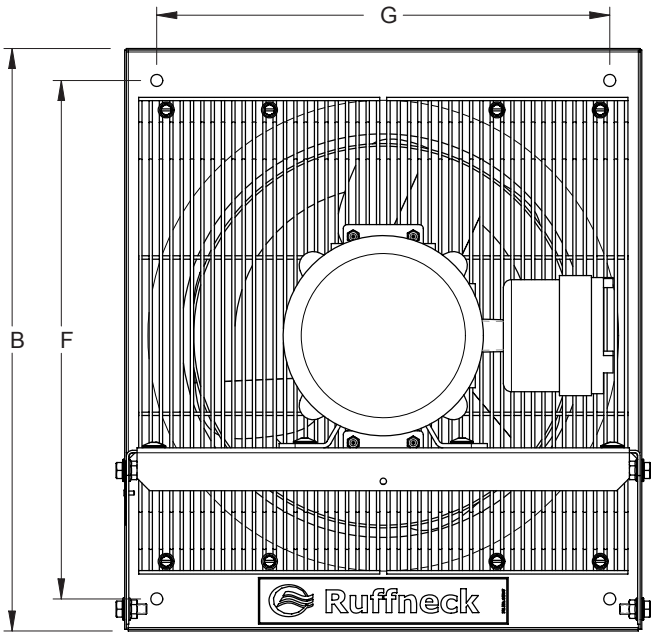

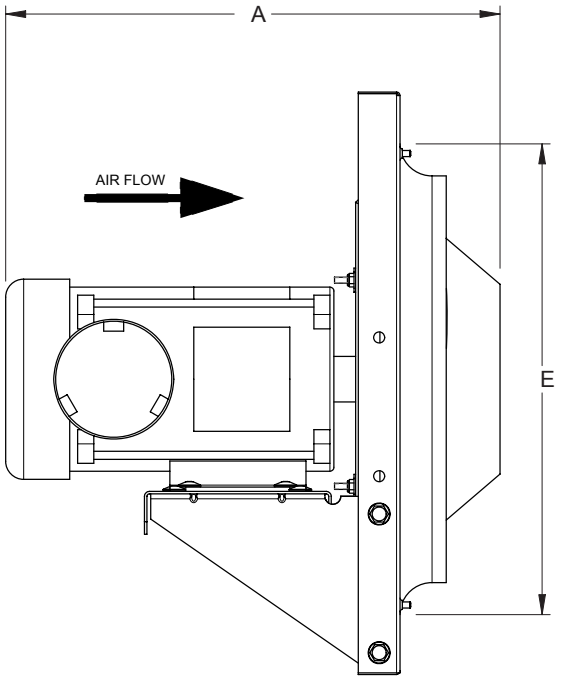

DIMENSION		EFX-12	EFX-16	EFX-20	EFX-24	EFX-30
A	mm	392.1	377.8	409.6	393.7	396.9
	in	15.4	14.9	16.1	15.5	15.6
B	mm	461.9	588	687.9	787.9	942.3
	in	18.2	23.2	27.1	31	37.1
C	mm	410	512.5	614.5	714.5	862.5
	in	16.1	20.2	24.2	28.1	34
D	mm	79.4	57.2	91.7	76.2	88.9
	in	3.1	2.2	3.6	3	3.5
* E	mm	373.3	475.6	577.3	677.3	835.3
	in	14.7	18.7	22.7	24.7	32.9
F	mm	411.1	537.2	637.1	737.1	891.5
	in	16.2	21.2	25.1	29	35.1
G	mm	359.2	461.7	563.7	663.7	811.7
	in	14.1	18.2	22.2	26.1	32

* This dimension is the minimum square opening size

FIGURE 2

MOUNTING CLEARANCES

1. Leave at least 20” (500mm) clearance between the rear of the motor and the nearest obstruction.
2. Clearance equal to the height of the fan shroud above, or beneath is required for easy fan or motor replacement.

TEMPERATURE CONTROL

1. If required, the fan output may be thermostatically controlled by a remotely mounted thermostat.

FINAL INSPECTION

1. Before application of electrical power:
   a. Check that all connections are secured and comply with the applicable wiring diagram and code requirements
   b. Confirm the power supply is compatible with the data plate rotating on motor.
   c. Remove any foreign objects from fan.
   d. Ensure all electrical covers are well secured.
   e. Ensure the fan rotates freely counterclockwise when viewed from the rear of the fan and air exits through the dampers.

EFX Explosion-Proof Exhaust Fan
Model Coding

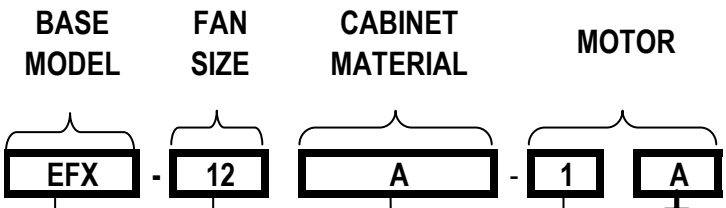

	MOTOR ELECTRICAL SPECS		
	VOLTS	PHASE	HERTZ
A	115	1	60
B	208	1	60
C	208	3	60
D	230	1	60
E	230	3	60
①,② F	460	1	60
G	460	3	60
H	575	3	60
I	220	1	50
② J	380	3	50
② K	440	3	50

MOTOR ENCLOSURE	
1	TOTALLY ENCLOSED
2	X-PROOF, GR C, D, E, F & G
3	WASHDOWN
4	WASHDOWN STAINLESS STEEL
5	SPECIAL MOTOR

CABINET MATERIAL	
A	EPOXY POWDER COATED CARBON STEEL
B	HERESITE PHENOLIC COATED CARBON STEEL
C	STAINLESS STEEL

FAN SIZE	
12	12" DIA
16	16" DIA
20	20" DIA
24	24" DIA
30	30" DIA

EXHAUST FAN MODEL	
EFX	EXHAUST FAN

① **Only available for Class I Group D, Class II Group F & G.**
② **Consult factory for motor availability.**

REPAIR & REPLACEMENT

WARNING

Fan should only be serviced by qualified personnel with HVAC equipment experience.
Disconnect fan from power supply before servicing fan. Lock the switch in the "OFF" (open) position and/or tag the switch to prevent unexpected power application.

1. After repairing any component:
   a. Check that electrical connections are correct and secure.
   b. Remove any foreign material from enclosures.
   c. Install and secure all covers.
   d. Ensure that all fasteners are tight.
   e. Remove all foreign objects from fan.
   f. Ensure air exits through dampers and fan rotates counterclockwise when viewed from rear of fan (see Figure 8).

MOTOR, FAN, AND FAN GUARD

1. Remove the (8) screws and washers that are holding the fan grills to the shroud (see Figure 9).
2. Remove the (4) bolts and nuts that are holding the motor to the motor mount (see Figure 10).
3. Remove the motor, fan and grills from the frame by lifting the motor (see Figure 11).
4. Before removing the fan, measure and record the location of the fan hub on the motor shaft (see Figure 12). If fan is difficult to remove, use a gear puller on the fan hub.
5. To reassemble, place grills with grill clips onto motor (see Figure 12) then position fan on motor shaft and tighten set screws.
6. Place motor assembly onto motor mount and fasten the fan guard to cabinet.
7. Center fan in shroud opening. Leave approximately 1/16" to 3/16" (1.6 to 4.8mm) gap between the motor and fan guard. (see Figure 13).
8. Bolt motor to motor mount. Manually spin the fan blade to ensure it rotates freely before applying power.
9. Air must exit through dampers and fan must rotate counter clockwise when viewing from the rear of the fan (see Figure 9).

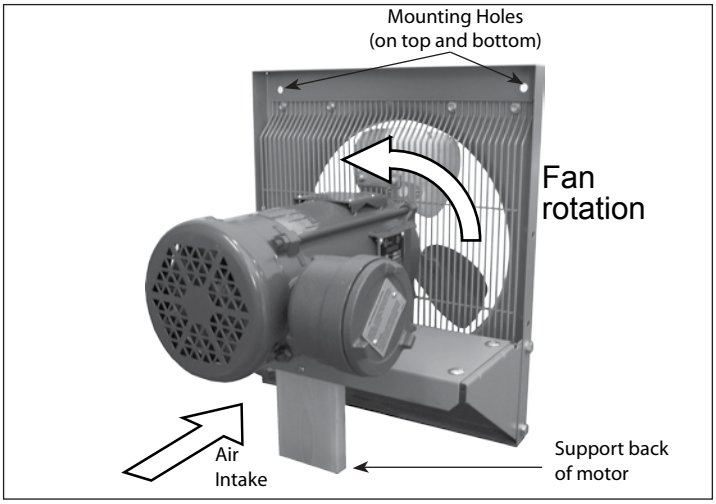

FIGURE 8

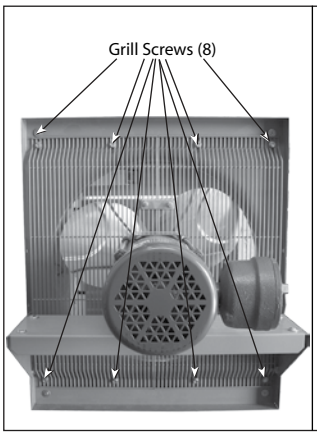

FIGURE 9

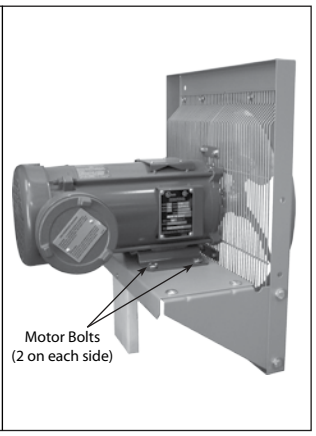

FIGURE 10

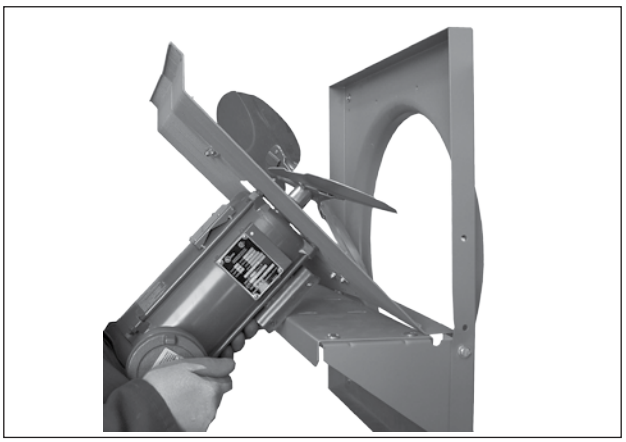

FIGURE 11

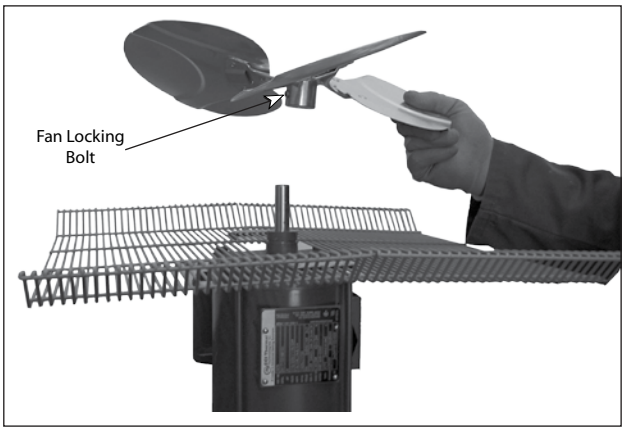

FIGURE 12

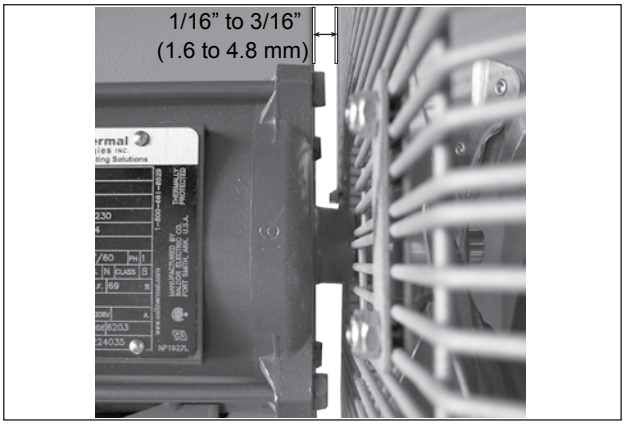

FIGURE 13

PARTS LIST

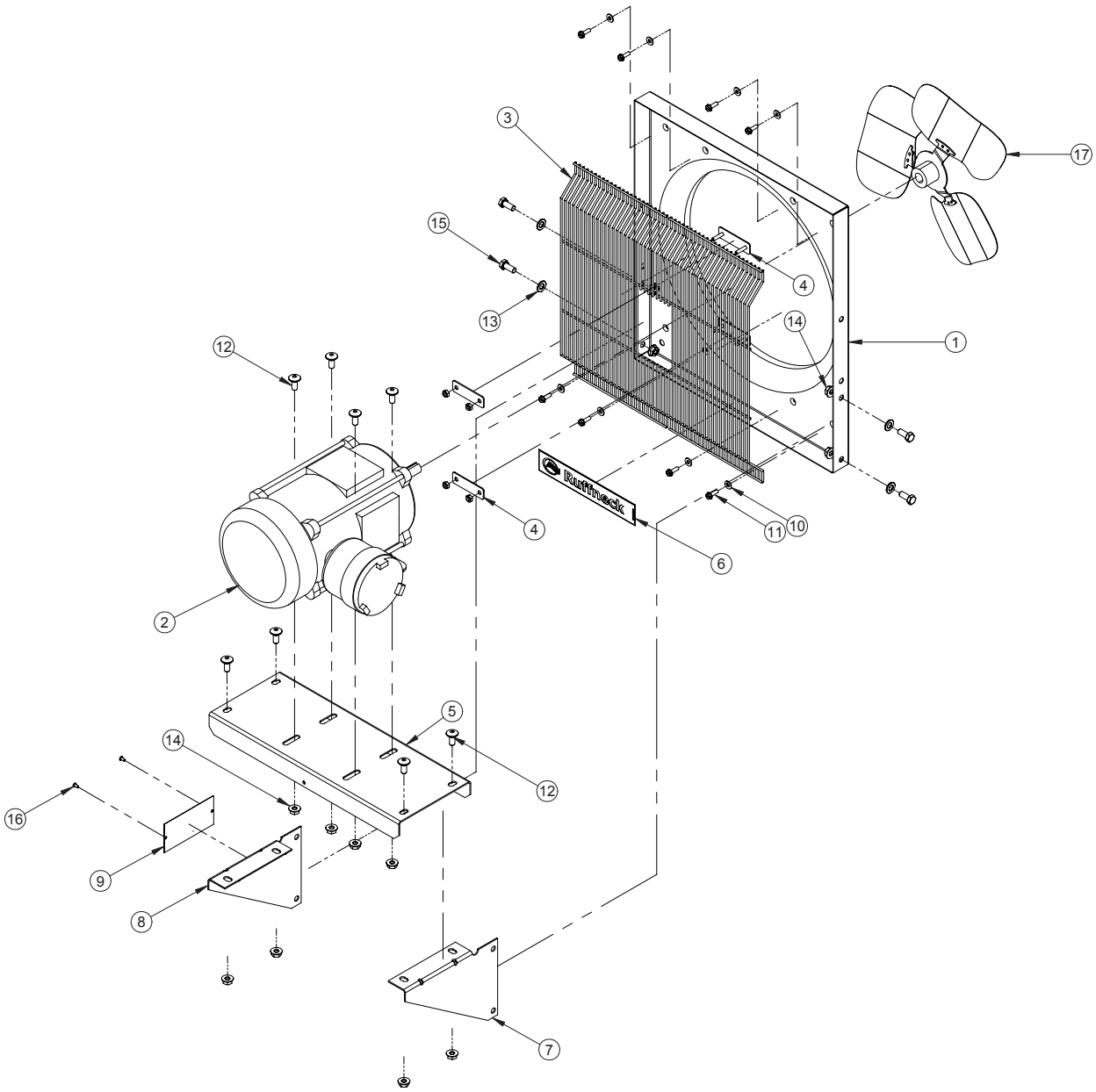

ITEM	EFX-12	EFX-16	EFX-20	EFX-24	EFX-30	DESCRIPTION	QTY.
1	10192	10193	10194	10195	10196	Panel, Shroud	1
2			*			Motor	1
3	5456	5457	5458	5459	5460	Fan Guard	2
4			9671			Grill Connector	2
5	3785	3786	3787	5433	9639	Channel, Motor Mount	1
6			1176			Label Ruffneck	1
7			3789		9638	Bracket, Motor Mount, Right	1
8			3788		9637	Bracket, Motor Mount, Left	1
9			10204			Label EFX	1
10			3258			Washer #10 SAE Flat	8
11			3257			Screw, 10-24, 5/8"Lg, Cutting	8
12			1521			Bolt, 5/16 NC, 3/4" Lg	8
13			1518			Washer 5/16 SAE	4
14			3382			Nut, 5/16 NC Hex Flange Locking	12
15			1517			Bolt, 5/16 -18 UNC x 3/4"Lg	4
16			1456			Rivet 1/8	2
17	5448	1378	1382	1389	1386	Fan	1

* Provide motor voltage, phase, horsepower and service classification when ordering replacement motor.

GENERAL SPECIFICATIONS

Hazardous Location Classifications	Class I, Div 1&2, Groups C,D Class II, Div 1&2, Groups E,F,G Temperature Code: T3B 165°C (329°F)
Approvals	Motors are CSA approved and/or UL listed.
Fan	Aluminum blade. Steel spider and hub with 5/8 in. (15.875mm) bore. Optional Heresite® coating for corrosive atmospheres.
Fan Guard	Split design with close wire spacing, meets OSHA requirements.
Motors	CSA approved and/or UL listed permanently lubricated ball bearing type with rigid base. Explosion-proof or totally enclosed construction. All standard voltages for 60 and 50 hertz are available.
Frame Material	16ga. (0.060 in. or 1.52mm) epoxy-coated steel. Optional stainless steel or Heresite® coating for corrosive atmospheres.
Mounting	Four 3/8 in. (9.5mm) diameter holes. Must be mounted to a rigid structure.

Model		**EFX12**	**EFX16**	**EFX20**	**EFX24**	**EFX30**
Fan Diameter		12 in. (305mm)	16 in. (406mm)	20 in. (508mm)	24 in. (610mm)	30 in. (762mm)
Motor*		1/2 HP, 60Hz (0.373kW)	1/2 HP, 60Hz (0.373kW)	1/2 HP, 60Hz (0.373kW)	1/2 HP, 60Hz (0.373kW)	3/4 HP, 60Hz (0.560kW)
Air Flow Rating @70°F (21°C)		850 CFM (1444 m^3/hr.)	1825 CFM (3101m^3/hr.)	3760 CFM (6388 m^3/hr.)	4180 CFM (7102 m^3/hr.)	4759 CFM (8086 m^3/hr.)
Motor Speed		1725 RPM	1725 RPM	1725 RPM	1725 RPM	1140 RPM
Net Weight		48.0 lbs. (21.8 kg)	52.0 lbs. (23.6 kg)	56.0 lbs. (25.4 kg)	61.0 lbs. (27.7 kg)	67.0 lbs. (30.4 kg)
Shipping Weight		56.0 lbs. (25.4 kg)	62.0 lbs. (28.1 kg)	68.0 lbs. (30.8 kg)	81.0 lbs. (36.7 kg)	87.0 lbs. (39.5 kg)
Dimensions	Width	16.1 in. (410mm)	20.2 in. (513mm)	24.2 in. (615mm)	28.1 in. (715mm)	34.0 in. (863mm)
	Height	18.2 in. (462mm)	23.1 in. (588mm)	27.1 in. (688mm)	31.0 in. (788mm)	37.1 in. (942mm)
	Depth	15.4 in. (392mm)	14.9 in. (378mm)	16.1 in. (410mm)	15.5 in. (394mm)	15.6 in. (397mm)

*Note: 50Hz units also available

NOTES

NOTES

NOTES

Ruffneck™
Heaters for the Harshest Environments
5918 Roper Road, Edmonton, Alberta, Canada T6B 3E1
Phone: (780) 466-3178 Fax: (780) 468-5904

PLEASE ADHERE TO INSTRUCTIONS PUBLISHED IN THIS MANUAL.
Failure to do so may be dangerous and may void certain provisions of your warranty.
For further assistance, please call:

24 Hr. Hotline: 1-800-661-8529

(U.S.A. and Canada)

Please have model and serial numbers available before calling.

WARRANTY: Under normal use the Company warrants to the purchaser that defects in material or workmanship will be repaired or replaced without charge for a period of 18 months from date of shipment, or 12 months from the start date of operation, whichever expires first. Any claim for warranty must be reported to the sales office where the product was purchased for authorized repair or replacement within the terms of this warranty.

Subject to State or Provincial law to the contrary, the Company will not be responsible for any expense for installation, removal from service, transportation, or damages of any type whatsoever, including damages arising from lack of use, business interruptions, or incidental or consequential damages.

The Company cannot anticipate or control the conditions of product usage and therefore accepts no responsibility for the safe application and suitability of its products when used alone or in combination with other products. Tests for the safe application and suitability of the products are the sole responsibility of the user.

This warranty will be void if, in the judgment of the Company, the damage, failure or defect is the result of:

- vibration, radiation, erosion, corrosion, process contamination, abnormal process conditions, temperature and pressures, unusual surges or pulsation, fouling, ordinary wear and tear, lack of maintenance, incorrectly applied utilities such as voltage, air, gas, water, and others or any combination of the aforementioned causes not specifically allowed for in the design conditions or
- any act or omission by the Purchaser, its agents, servants or independent contractors which for greater certainty, but not so as to limit the generality of the foregoing, includes physical, chemical or mechanical abuse, accident, improper installation of the product, improper storage and handling of the product, improper application or the misalignment of parts.

No warranty applies to paint finishes except for manufacturing defects apparent within 30 days from the date of installation.

The Company neither assumes nor authorizes any person to assume for it any other obligation or liability in connection with the product(s).

The Purchaser agrees that all warranty work required after the initial commissioning of the product will be provided only if the Company has been paid by the Purchaser in full accordance with the terms and conditions of the contract.

The Purchaser agrees that the Company makes no warranty or guarantee, express, implied or statutory, **(INCLUDING ANY WARRANTY OF MERCHANTABILITY OR WARRANTY OF FITNESS FOR A PARTICULAR PURPOSE)** written or oral, of the Article or incidental labour, except as is expressed or contained in the agreement herein.

LIABILITY: Technical data contained in the catalog or on the website is subject to change without notice. The Company reserves the right to make dimensional and other design changes as required. The Purchaser acknowledges the Company shall not be obligated to modify those articles manufactured before the formulation of the changes in design or improvements of the products by the Company.

The Company shall not be liable to compensate or indemnify the Purchaser, end user or any other party against any actions, claims, liabilities, injury, loss, loss of use, loss of business, damages, indirect or consequential damages, demands, penalties, fines, expenses (including legal expenses), costs, obligations and causes of action of any kind arising wholly or partly from negligence or omission of the user or the misuse, incorrect application, unsafe application, incorrect storage and handling, incorrect installation, lack of maintenance, improper maintenance or improper operation of products furnished by the Company.

Edmonton	Oakville	Orillia	Greensburg	Houston	Denver
Head Office	1-800-410-3131	1-877-325-3473	1-800-473-2402	1-855-219-2101	1-855-244-3128
1-800-661-8529	(905) 829-4422	(705) 325-3473	(812) 663-4141	(281) 506-2310	(303) 979-7339
(780) 466-3178	F 905-829-4430	F 705-325-2106	F 812-663-4202	F 281-506-2316	F 303-979-7350
F 780-468-5904					

Product Data Sheet
April 2014
00813-0100-4728, Rev TA

Rosemount® 644 Temperature Transmitter



The most versatile temperature transmitter

Reduce complexity and simplify the day to day operations of your diverse temperature applications with the versatile Rosemount 644 family of temperature transmitters. Make better decisions for your process with the new and easy to use Rosemount 644 transmitter capabilities including: diagnostics, safety certification, integral transient protection and display options.

ROSEMOUNT

EMERSON.
Process Management

Rosemount 644 family of transmitters



Fit your needs within one model family with a customizable transmitter design

- DIN Head mount and Rail mount form factors
- 4-20 mA /HART® with Selectable Revisions, FOUNDATION™ fieldbus or Profibus PA Protocol support
- SIL 2 certified to IEC 61508
- Enhanced Display with Local Operator Interface
- LCD Display
- Integral Transient Protection
- Enhanced Accuracy and Stability
- Transmitter-Sensor Matching with Callendar Van Dusen constants
- Variety of enclosures

Rosemount 644 Selection Guide

Rosemount 644 HART transmitters



HART head mount

- Single or Dual sensor inputs for RTD, Thermocouple, mV and Ohm
- DIN A Head mount transmitter
- SIL 2 certified to IEC 61508
- LCD Display
- Enhanced Display with Local Operator Interface
- Integral Transient Protection
- Diagnostic Suite
- Enhanced Accuracy and Stability
- Transmitter-Sensor Matching with Callendar Van Dusen constants



HART rail mount

- Single sensor input for RTD, Thermocouple, mV and Ohm
- Custom Alarm and Saturation Levels
- Transmitter-Sensor Matching with Callendar Van Dusen constants
- Hardware Alarm Switch

Contents

Ordering information . . . . . page 4
Specifications . . . . . page 13
Product Certifications . . . . . page 36
Rosemount 644 Dimensional Drawings . . . . . page 23
Specifications and reference data for 644 HART (device revision 7 or previous) . . . . . page 33

Rosemount 644 FOUNDATION fieldbus



- Single sensor input for RTD, Thermocouple, mV and Ohm
- DIN A Head mount transmitter
- Standard function blocks: 2 Analog Inputs, 1 PID and 1 Backup Link Active Scheduler (LAS)
- LCD Display
- ITK 5.01 Compliant
- Transmitter Sensor Matching with Callendar Van Dusen constants

Rosemount 644 Profibus PA



- Single sensor input for RTD, Thermocouple, mV and Ohm
- DIN A Head mount transmitter
- Standard function blocks: 1 physical, 1 Transducer, and 1 Analog Out
- LCD Display
- Compliant to Profibus PA Profile 3.02
- Transmitter-Sensor Matching with Callendar Van Dusen constants

Easy to use human-centered designs to make your job simple

- Diagnostic information and process health at your finger tips with intuitive Device Dashboards.
- Communication clips are easily accessible when an LCD display is attached.
- Easy wiring practices with captive sensor screw terminals and optimized wiring diagram.

Optimize plant efficiency and increase visibility into the process with an expansive diagnostic offering

- Keep your process up and running with Hot Backup™ where if your primary sensor fails, a second sensor seamlessly takes over and prevents the measurement failure.
- Tighten control with Sensor Drift Alert that detects drifting sensors and pro-actively notifies the user.
- Enable predictive maintenance practices with Thermocouple Degradation Diagnostic that monitors the health of the thermocouple loop.
- Improve quality with Minimum and Maximum Temperature Tracking that records temperature extremes of the process and the ambient environment.

Ordering information

The Rosemount 644 is a versatile temperature transmitter that delivers field reliability and advanced accuracy and stability to meet demanding process needs.



Transmitter features include:

- HART/4-20 mA with Selectable Revision 5 and 7 selectable (Option Code A), FOUNDATION fieldbus (Option Code F) or PROFIBUS PA (Option Code W)
- DIN A Head mount or Rail Mount transmitter styles
- Dual Sensor Input (Option Code S)
- SIS SIL 2 Safety Certification (Option Code QT)
- LCD Display (Option Code M5)
- Local Operator Interface (Option Code M4)
- Advanced Diagnostics (Option Codes DC and DA1)
- Enhanced Transmitter Accuracy and Stability (Option Code P8)
- Transmitter-Sensor Matching (Option Code C2)

Table 1. Rosemount 644 Smart Temperature Transmitter ordering information

★ The Standard offering represents the most common models and options. These options should be selected for best delivery.
The Expanded offering is manufactured after receipt of order and is subject to additional delivery lead time.

● = Available
– = Not Available

Model	Product description					
644	Temperature Transmitter					
Transmitter Type						
Standard						**Standard**
H	DIN A Head Mount - Single Sensor Input					★
R	Rail Mount - Single Sensor Input					★
S	DIN A Head Mount - Dual Sensor Input (HART only)					★
Output		**Head**			**Rail**	
Standard						**Standard**
A	4–20 mA with digital signal based on HART protocol	●			●	★
F	FOUNDATION fieldbus digital signal (includes 2 AI function blocks and Backup Link Active Scheduler)	●			–	★
W	Profibus PA digital signal	●			–	★
Product certifications		**Head**			**Rail**	
Hazardous locations certificates (consult factory for availability[(1)])		A	F	W	**A**	
Standard						**Standard**
NA	No approval	●	●	●	●	★
E5	FM Explosion-proof; Dust Ignition-proof	●	●	●	–	★

Table 1. Rosemount 644 Smart Temperature Transmitter ordering information

★ The Standard offering represents the most common models and options. These options should be selected for best delivery.
The Expanded offering is manufactured after receipt of order and is subject to additional delivery lead time.

● = Available
– = Not Available

		Head			Rail	
		A	F	W	A	
Standard						**Standard**
I5	FM Intrinsically Safe; Non-incendive	●	●	●	●	★
K5	FM Explosionproof; Intrinsically Safe; Non-incendive; Dust Ignition-proof	●	●	●	–	★
NK	IECEx Dust	●	–	–	–	★
KC	FM and CSA Intrinsically Safe and Non-incendive	–	–	–	●	★
KB	FM and CSA: Explosionproof; Intrinsically Safe; Non-incendive; Dust Ignition-proof	●	–	–	–	★
KD	FM, CSA and ATEX Explosionproof, Intrinsically Safe	●	●	●		★
I6	CSA Intrinsically Safe	●	●	●	●	★
K6	CSA Explosionproof; Intrinsically Safe; Non-incendive; Dust Ignition-proof	●	●	●	–	★
I3	China Intrinsic Safety	●	–	–	–	★
E3	China Flameproof	●	●	●	–	★
N3	Chine Type n	●	–	–	–	★
E1	ATEX Flameproof	●	●	●	–	★
N1	ATEX Type n	●	●	●	–	★
NC	ATEX Type n Component	●	●	●	●	★
K1	ATEX Flameproof; Intrinsic Safety; Type n; Dust	●	●	●		★
ND	ATEX Dust Ignition–Proof	●	●	●	–	★
KA	CSA and ATEX: Explosionproof; Intrinsically Safe; Non-incendive	●	–	–	–	★
I1	ATEX Intrinsic Safety	●	●	●	●	★
E7	IECEx Flameproof	●	●	●	–	★
I7	IECEx Intrinsic Safety	●	●	●	●	★
N7	IECEx Type n	●	●	●	–	★
NG	IECEx Type n Component	●	●	●	●	★
K7	IECEx Flameproof; Intrinsic Safety; Type n; Dust	●	–	–	–	★
I2	INMETRO Intrinsic Safety	●	–	–	–	★
E4	TIIS Flameproof	●	●	–	–	★
E2	INMETRO Flameproof	●	●	●	–	★

Options

		Head			Rail	
		A	F	W	A	
PlantWeb™ control functionality						
Standard						**Standard**
A01	FOUNDATION fieldbus Advanced Control Function Block Suite	–	●	–	–	★
PlantWeb standard diagnostic functionality						
Standard						**Standard**
DC	Diagnostics: Hot Backup and Sensor Drift Alert	●	–	–	–	★

Table 1. Rosemount 644 Smart Temperature Transmitter ordering information

★ **The Standard offering represents the most common models and options. These options should be selected for best delivery.**

The Expanded offering is manufactured after receipt of order and is subject to additional delivery lead time.

● = Available
– = Not Available

PlantWeb advanced diagnostic functionality									
Standard									**Standard**
DA1	HART Sensor and Process Diagnostic Suite: Thermocouple Diagnostic and Min/Max Tracking				●	–	–	–	★
Enclosure options					**Head**			**Rail**	
					A	F	W	**A**	
Standard									**Standard**
	Housing style	**Material**	**Entry size**	**Diameter**					
J5[2][3]	Universal Junction Box, 2 entries	Aluminum	M20 X 1.5	3 in (76 mm)	●	●	●	–	★
J6[3]	Universal Junction Box, 2 entries	Aluminum	1/2–14 NPT	3 in (76 mm)	●	●	●	–	★
R1	Rosemount Connection Head, 2 entries	Aluminum	M20 X 1.5	3 in (76 mm)	●	●	●	–	★
R2	Rosemount Connection Head, 2 entries	Aluminum	1/2–14 NPT	3 in (76 mm)	●	●	●	–	★
J1[2]	Universal Junction Box, 3 entries	Aluminum	M20 X 1.5	3.5 in (89 mm)	●	●	●	–	★
J2	Universal Junction Box, 3 entries	Aluminum	1/2–14 NPT	3.5 in (89 mm)	●	●	●	–	★
Expanded									
J3[2]	Universal Junction Box, 3 entries	Cast SST	M20 X 1.5	3.5 in (89 mm)	●	●	●	–	
J4	Universal Junction Box, 3 entries	Cast SST	1/2–14 NPT	3.5 in (89 mm)	●	●	●	–	
J7[2][3]	Universal Junction Box, 2 entries	Cast SST	M20 X 1.5	3 in (76 mm)	●	●	●	–	
J8[3]	Universal Junction Box, 2 entries	Cast SST	1/2–14 NPT	3 in (76 mm)	●	●	●	–	
R3	Rosemount Connection Head, 2 entries	Cast SST	M20 X 1.5	3 in (76 mm)	●	●	●	–	
R4	Rosemount Connection Head, 2 entries	Cast SST	1/2–14 NPT	3 in (76 mm)	●	●	●	–	
S1	Connection Head, 2 entries	Polished SST	1/2–14 NPT	3 in (76 mm)	●	●	●	–	
S2	Connection Head, 2 entries	Polished SST	1/2–14 NPSM	3 in (76 mm)	●	●	●	–	
S3	Connection Head, 2 entries	Polished SST	M20 X 1.5	3 in (76 mm)	●	●	●	–	
S4	Connection Head, 2 entries	Polished SST	M20 X 1.5, M24 X 1.4	3 in (76 mm)	●	●	●	–	
Mounting bracket									
Standard									**Standard**
B4[4]	316 SST U-bolt Mounting Bracket, 2-in pipe mount				●	●	●	–	★
B5[4]	"L" Mounting Bracket for 2-inch pipe or panel mounting				●	●	●	–	★
Display and interface options									
Standard									**Standard**
M4	LCD Display with Local Operator Interface				●	–	–	–	★
M5	LCD Display				●	●	●	–	★
Software configuration									
Standard									**Standard**
C1	Custom Configuration of Date, Descriptor and Message (Requires CDS with order)				●	●	●	●	★

Table 1. Rosemount 644 Smart Temperature Transmitter ordering information

★ **The Standard offering represents the most common models and options. These options should be selected for best delivery.**
The Expanded offering is manufactured after receipt of order and is subject to additional delivery lead time.

● = Available
– = Not Available

Enhanced performance						
Standard						**Standard**
P8[5]	Enhanced Transmitter Accuracy and Stability	●	–	–	–	★
Alarm level configuration						
Standard						**Standard**
A1	NAMUR alarm and saturation levels, high alarm	●	–	–	●	★
CN	NAMUR alarm and saturation levels, low alarm	●	–	–	●	★
C8	Low Alarm (Standard Rosemount Alarm and Saturation Values)	●	–	–	●	★
Line filter		**Head**			**Rail**	
Standard						**Standard**
F5	50 Hz Line Voltage Filter	●	●	●	●	★
F6	60 Hz Line Voltage Filter	●	●	●	●	★
Sensor Trim						
		A	F	W	**A**	
Standard						**Standard**
C2	Transmitter-Sensor Matching - Trim to Specific Rosemount RTD Calibration Schedule (CVD constants)	●	●	●	●	★
5-point calibration option						
Standard						**Standard**
C4	5-point calibration. *Use option code Q4 to generate a calibration certificate*	●	●	●	●	★
Calibration certificate						
Standard						**Standard**
Q4	Calibration certificate. *3-Point calibration with certificate*	●	●	●	●	★
QP	Calibration Certification & Tamper Evident Seal	●	●	●	–	★
Quality certification for safety						
Standard						**Standard**
QT	Safety Certified to IEC 61508 with certificate of FMEDA data	●	–	–	–	★
Shipboard certification						
SBS	American Bureau of Shipping (ABS) Type Approval	●	●	●	–	★
SBV	Bureau Veritas (BV) Type Approval	●	●	●	–	★
SDN	Det Norske Veritas (DNV) Type Approval	●	●	●	–	★
SLL	Lloyd's Register (LR) Type Approval	●	●	●	–	★

Table 1. Rosemount 644 Smart Temperature Transmitter ordering information

★ **The Standard offering represents the most common models and options. These options should be selected for best delivery.**
The Expanded offering is manufactured after receipt of order and is subject to additional delivery lead time.

● = Available
– = Not Available

External ground						
Standard						**Standard**
G1	External ground lug assembly (see "External ground screw assembly" on page 10)	●	●	●	–	★
Transient protection						
Standard						**Standard**
T1(6)	Integral Transient Protector	●	–	–	–	★
Cable gland option						
Standard						**Standard**
G2	Cable gland (7.5 mm - 11.99 mm)	●	●	●	–	★
G7	Cable gland, M20x1.5, Ex e, Blue Polyamide (5 mm - 9 mm)	●	●	●	–	★
Cover chain option						
Standard						**Standard**
G3	Cover chain	●	●	●	–	★
Conduit electrical connector						
Standard						**Standard**
GE(7)	M12, 4-pin, Male Connector (eurofast®)	●	●	●	–	★
GM(7)	A size Mini, 4-pin, Male Connector (minifast®)	●	●	●	–	★
External label						
Standard						**Standard**
EL	External label for ATEX Intrinsic Safety	●	●	●	–	★
HART revision configuration		**Head**			**Rail**	
		A	F	W	**A**	
Standard						**Standard**
HR5	Configured for HART Revision 5	●	–	–	–	★
HR7 (8)	Configured for HART Revision 7	●	–	–	–	★
Assemble to options						
Standard						**Standard**
XA	Sensor Specified Separately and Assembled to Transmitter	●	●	●	–	★
Typical rail mount model number: 644 R A I5 **Typical head mount model number: 644 S A I5 DC DA1 J5 M5**						

(1) See Table 2 for the validity of enclosures with individual approval options.

(2) When ordered with XA, 1/2-in. NPT enclosure will come equipped with an M20 adapter with the sensor installed as a process ready.

(3) Enclosure ships equipped with 50.8 mm (2-in) SST pipe bracket for mounting.

(4) Bracket assembly only available with 3-Conduit housings J1 and J2.

(5) See Table 10 for Enhanced Accuracy specifications.

(6) Transient Protection option requires the use of J1, J2, J3, or J4.

(7) Available with Intrinsically Safe approvals only. For FM Intrinsically Safe or non-incendive approval (option code I5), install in accordance with Rosemount drawing 03151-1009.

(8) Configures the HART output to HART Revision 7. The device can be field configured to HART Revision 5 if needed.

Note
For additional options (e.g. "K" codes), please contact your local Emerson Process Management representative.

Table 2. 644 Enclosure options valid with individual approval codes

Code	Hazardous location approval description	Enclosure options valid with approval
NA	No approval	J1, J2, J3, J4, R1, R2, R3, R4, J5, J6, J7, J8, S1, S2, S3, S4
E5	FM Explosionproof; Dust Ignition-proof	J1, J2, J3, J4, R1, R2, R3, R4, J5, J6, J7, J8
I5	FM Intrinsically Safe; Non-incendive	J1, J2, J3, J4, R1, R2, R3, R4, J5, J6, J7, J8
K5	FM Explosionproof; Intrinsically Safe; Non-incendive; Dust Ignition-proof	J1, J2, J3, J4, R1, R2, R3, R4, J5, J6, J7, J8
NK	IECEx Dust	J1, J2, J3, J4, R1, R2, R3, R4, J5, J6, J7, J8
KC	FM and CSA Intrinsically Safe and Non-incendive	Only available with Rail mount device
KB	FM and CSA: Explosionproof; Intrinsically Safe; Non-incendive; Dust Ignition-proof	J2, J4, R2, R4, J6, J8
KD	FM, CSA and ATEX Explosionproof, Intrinsically Safe	J2, J4, R2, R4, J6, J8
I6	CSA Intrinsically Safe	J1, J2, J3, J4, R1, R2, R3, R4, J5, J6, J7, J8
K6	CSA Explosionproof; Intrinsically Safe; Non-incendive; Dust Ignition-proof	J2, J4, R2, R4, J6, J8
I3	China Intrinsic Safety	J1, J2, J3, J4, R1, R2, R3, R4, J5, J6, J7, J8
E3	China Flameproof	R1, R2, R3, R4, J5, J6, J7, J8
N3	China Type n	R1, R2, R3, R4, J5, J6, J7, J8
E1	ATEX Flameproof	J1, J2, J3, J4, R1, R2, R3, R4, J5, J6, J7, J8
N1	ATEX Type n	J1, J2, J3, J4, R1, R2, R3, R4, J5, J6, J7, J8
NC	ATEX Type n Component	None
K1	ATEX Flameproof; Intrinsic Safety; Type n; Dust	J1, J2, J3, J4, R1, R2, R3, R4, J5, J6, J7, J8
ND	ATEX Dust Ignition-Proof	J1, J2, J3, J4, R1, R2, R3, R4, J5, J6, J7, J8
KA	CSA and ATEX: Explosionproof; Intrinsically Safe; Non-incendive	J2, J4, R2, R4, J6, J8
I1	ATEX Intrinsic Safety	J1, J2, J3, J4, R1, R2, R3, R4, J5, J6, J7, J8, S1, S2, S3, S4
E7	IECEx Flameproof	J1, J2, J3, J4, R1, R2, R3, R4, J5, J6, J7, J8
I7	IECEx Intrinsic Safety	J1, J2, J3, J4, R1, R2, R3, R4, J5, J6, J7, J8, S1, S2, S3, S4
N7	IECEx Type n	J1, J2, J3, J4, R1, R2, R3, R4, J5, J6, J7, J8
NG	IECEx Type n Component	None
K7	IECEx Flameproof; Intrinsic Safety; Type n; Dust	J1, J2, J3, J4, R1, R2, R3, R4, J5, J6, J7, J8
I2	INMETRO Intrinsic Safety	J1, J2, J3, J4, R1, R2, R3, R4, J5, J6, J7, J8
E4	TIIS Flameproof	J6
E2	INMETRO Flameproof	R1, R2, R3, R4, J5, J6, J7, J8
K2	INMETRO Flameproof, Intrinsic Safety	R1, R2, R3, R4, J5, J6, J7, J8

Tagging

Hardware

- 13 characters total
- Tags are adhesive labels
- Tag is permanently attached to transmitter

Software

- The transmitter can store up to 13 characters for FOUNDATION fieldbus and Profibus PA or 8 for HART protocol. If no characters are specified, the first 8 characters of the hardware tag are the default. An optional 32 character Long Software Tag is available when option code HR7 is ordered.

Considerations

External ground screw assembly

The external ground screw assembly can be ordered by specifying code G1 when an enclosure is specified. However, some approvals include the ground screw assembly in the transmitter shipment, hence it is not necessary to order code G1. The table below identifies which approval options include the external ground screw assembly and which do not.

Option code	External ground screw assembly included?
E5, I1, I2, I5, I6, I7, K5, K6, NA, I3, KB	No–Order option code G1
E1, E2, E3, E4, E7, K7, N1, N7, ND, K1, K2, KA, NK, N3, KD, T1	Yes

Table 3. Enclosure Spares

Description	Part number
Universal Head, Aluminum, Standard cover, 2-conduit - M20 entries	00644-4420-0002
Universal Head, Aluminum, Display cover, 2-conduit - M20 entries	00644-4420-0102
Universal Head, Aluminum, Standard cover, 2-conduit - 1/2 - 14 NPT entries	00644-4420-0001
Universal Head, Aluminum, Display cover, 2-conduit - 1/2 - 14 NPT entries	00644-4420-0101
Universal Head, SST, Standard cover, 2-conduit - M20 entries	00644-4433-0002
Universal Head, SST, Display cover, 2-conduit - M20 entries	00644-4433-0102
Universal Head, SST, Standard cover, 2-conduit - 1/2 - 14 NPT entries	00644-4433-0001
Universal Head, SST, Display cover, 2-conduit - 1/2 - 14 NPT entries	00644-4433-0101
Connection Head, Aluminum, Standard cover, 2-conduit - M20 x 1/2 ANPT entries	00644-4410-0021
Connection Head, Aluminum, Display cover, 2-conduit - M20 x 1/2 ANPT entries	00644-4410-0121
Connection Head, Aluminum, Standard cover, 2-conduit - 1/2 - 14 NPT x 1/2 ANPT entries	00644-4410-0011
Connection Head, Aluminum, Display cover, 2-conduit - 1/2 - 14 NPT x 1/2 ANPT entries	00644-4410-0111
Connection Head, SST, Standard cover, 2-conduit - M20 X 1/2 ANPT entries	00644-4411-0021
Connection Head, SST, Display cover, 2-conduit - M20 X 1/2 ANPT entries	00644-4411-0121
Connection Head, SST, Standard cover, 2-conduit - 1/2 - 14 NPT x 1/2 ANPT entries	00644-4411-0011
Connection Head, SST, Display cover, 2-conduit - 1/2 - 14 NPT x 1/2 ANPT entries	00644-4411-0111
Connection Head, Polished SST, Standard cover, 2-conduit - M20 x 1.5 entries	00079-0312-0033
Connection Head, Polished SST, Display cover, 2-conduit - M20 x 1.5 entries	00079-0312-0133
Connection Head, Polished SST, Standard cover, 2-conduit - M20 x 1.5 / M24 x 1.5 entries	00079-0312-0034
Connection Head, Polished SST, Display cover, 2-conduit - M20 x 1.5 / M24 x 1.5 entries	00079-0312-0134
Connection Head, Polished SST, Standard cover, 2-conduit -1/2 -14 NPT entries	00079-0312-0011
Connection Head, Polished SST, Display cover, 2-conduit - 1/2 -14 NPT entries	00079-0312-0111
Connection Head, Polished SST, Standard cover, 2-conduit - 1/2 -14 NPSM entries	00079-0312-0022
Connection Head, Polished SST, Display cover, 2-conduit - 1/2 -14 NPSM entries	00079-0312-0122
Universal Head, Aluminum, Standard cover, 3-conduit - M20 entries	00644-4439-0001
Universal Head, Aluminum, Display cover, 3-conduit - M20 entries	00644-4439-0101
Universal Head, Aluminum, Standard cover, 3-conduit - 1/2 - 14 NPT entries	00644-4439-0002
Universal Head, Aluminum, Display cover, 3-conduit - 1/2 - 14 NPT entries	00644-4439-0102
Universal Head, SST, Standard cover, 3-conduit - M20 entries	00644-4439-0003

Table 3. Enclosure Spares

Description	Part number
Universal Head, SST, Display cover, 3-conduit - M20 entries	00644-4439-0103
Universal Head, SST, Standard cover, 3-conduit - 1/2 - 14 NPT entries	00644-4439-0004
Universal Head, SST, Display cover, 3-conduit - 1/2 - 14 NPT entries	00644-4439-0104

Table 4. Display Kit Spares

Description	Part number
Display only	
644 HART LCD Display (option M5)	00644-7630-0001
644 HART Local Operator Interface (option M4)	00644-7630-1001
644 FOUNDATION Fieldbus LCD Display (option M5)	00644-4430-0002
644 Profibus PA LCD Display (option M5)	00644-4430-0002
644 HART Legacy display Kit (option M5 - Device Rev 7)	00644-4430-0002
Display with aluminum meter cover	
Rosemount 644 HART LCD Display (option M5)(1)	00644-7630-0011
Rosemount 644 HART LCD Display (option M5)(2)	00644-7630-0111
Display with aluminum cover	
Rosemount 644 HART Local Operator Interface (option M4)(1)	00644-7630-1011
Rosemount 644 HART Local Operator Interface (option M4)(2)	00644-7630-1111
Rosemount 644 FOUNDATION Fieldbus LCD Display (option M5)(1)	00644-4430-0001
Rosemount 644 Profibus PA LCD Display (option M5)(1)	00644-4430-0001
Rosemount 644 HART Legacy display Kit (option M5)(1)	00644-4430-0001
Display with SST meter cover	
Rosemount 644 HART LCD Display (option M5)(1)	00644-7630-0021
Rosemount 644 HART LCD Display (option M5)(2)	00644-7630-0121
Rosemount 644 HART Local Operator Interface (option M4)(1)	00644-7630-1021
Rosemount 644 HART Local Operator Interface (option M4)(2)	00644-7630-1121
Rosemount 644 FOUNDATION Fieldbus LCD Display (option M5)(1)	00644-4430-0011
Rosemount 644 Profibus PA LCD Display (option M5)(1)	00644-4430-0011
Rosemount 644 HART Legacy display Kit (option M5)(1)	00644-4430-0011

(1) Covers provided are compatible with the 3-in (76 mm) Universal Junction Box and Rosemount Connection Head enclosure styles.

(2) Cover provided is compatible with the 3.5-in (89 mm) Universal Junction Box enclosure style.

Table 5. Transient Protection Spares

Description	Part number
Transient Protector without Enclosure	00644-4437-0001
Transient Protector with Universal Head, Aluminum, Standard cover, 3-conduit - M20	00644-4438-0001
Transient Protector with Universal Head, Aluminum, Display cover, 3-conduit - M20	00644-4438-0101
Transient Protector with Universal Head, Aluminum, Standard cover, 3-conduit - 1/2 NPT	00644-4438-0002
Transient Protector with Universal Head, Aluminum, Display cover, 3-conduit - 1/2 NPT	00644-4438-0102
Transient Protector with Universal Head, SST, Standard cover, 3-conduit - M20	00644-4438-0003

Description	Part number
Transient Protector with Universal Head, SST, Display cover, 3-conduit - M20	00644-4438-0103
Transient Protector with Universal Head, SST, Standard cover, 3-conduit - 1/2 NPT	00644-4438-0004
Transient Protector with Universal Head, SST, Display cover, 3-conduit - 1/2 NPT	00644-4438-0104

Table 6. Miscellaneous Accessories

Description	Part number
Ground Screw Assembly Kit	00644-4431-0001
Mounting Screws and Springs	00644-4424-0001
Hardware Kit for mounting a Rosemount 644 Head mount to a DIN rail (includes clips for symmetrical and asymmetrical rails)	00644-5301-0010
U-Bolt mounting Kit for Universal Housing	00644-4423-0001
Universal Clip for Rail or Wall Mount	03044-4103-0001
24 Inches of Symmetric (Top Hat) Rail	03044-4200-0001
24 Inches of Asymmetric (G) Rail	03044-4201-0001
Ground Clamp for symmetric or asymmetric rail	03044-4202-0001
Snap Rings Kit (used for assembly to a DIN sensor)	00644-4432-0001
Cover Clamp Assembly	00644-4434-0001
Terminal Block, 13mm M4 Mounting Screws	00065-0305-0001
U-bolt Mounting Bracket, 2-in pipe mount (option B4)	00644-7610-0001
L - Mounting Bracket for 2-inch pipe or panel mounting (option B5)	00644-7611-0001

Specifications

HART, FOUNDATION fieldbus, and Profibus PA

Functional specifications

Inputs
User-selectable; sensor terminals rated to 42.4 Vdc. See "Accuracy" on page 18 for sensor options.

Output
Single 2-wire device with either 4–20 mA/HART, linear with temperature or input; or completely digital outputs with FOUNDATION fieldbus communication (ITK 5.01 compliant), or PROFIBUS PA (compliant with profile 3.02).

Isolation
Input/output isolation tested to 600 Vrms.

Local display options

LCD display
An optional 11 digit, 2 line integral LCD display operates with a floating or fixed decimal point. It displays engineering units (°F, °C, °R, K, Ohms and mV), mA, and percent of range. The display can be configured to alternate between selected display options. Display settings are pre-configured at the factory according to the standard transmitter configuration. They can be re-configured in the field using either HART, FOUNDATION fieldbus, or Profibus PA communications.

LCD display with local operator interface
An optional 14 digit, 2 line integral LCD display operates with a floating or fixed decimal point. The LOI includes all features and functionality available in the regular display with an added 2-button configuration capability directly at the display interface. The LOI also has optional Password Protection for secure operations. The LOI is only available on the 644 HART Head mount product.

For more information on the LOI configuration options or further functionality that the LOI offers, see Appendix D: Local Operator Interface (LOI) in the Rosemount 644 Temperature Transmitter Product Manual (00809-0200-4728), available on Rosemount.com.

Humidity limits
0–95% relative humidity

Update time
≤ 0.5 sec. Per Sensor

Accuracy (default configuration) PT 100
HART Standard: ±0.15 °C
HART Enhanced: ±0.1 °C
FOUNDATION fieldbus: ±0.15 °C
Profibus PA: ±0.15 °C

Physical specifications

Electrical connections

Model	Power and sensor terminals
644 Head (HART)	Captivated screw terminals permanently fixed to terminal block
644 Head (FF/Profibus)	Compression screw terminals permanently fixed to the terminal block
644 Rail (HART)	Compression screw permanently fixed to front panel

Field communicator connections

Communication terminals	
644 Head	Clips permanently fixed to terminal block
644 Rail	Clips permanently fixed to front panel

Materials of construction

Electronics housing and terminal block	
644 Head mount	*Noryl*® glass reinforced
644 Rail mount	*Lexan*® polycarbonate
Enclosure (options J1, J2, J5, J6, R1, and R2)	
Housing	Low-copper aluminum
Paint	Polyurethane
Cover O-ring	Buna-N

Materials of construction (stainless steel housing for biotechnology, pharmaceutical industries, and sanitary applications)

Housing and standard meter cover

- 316 SST

Cover O-ring

- Buna-N

Mounting
The 644R attaches directly to a wall or a DIN rail. The 644H installs in a connection head or universal head mounted directly on a sensor assembly, apart from a sensor assembly using a universal head, or to a DIN rail using an optional mounting clip.

Special mounting considerations

See "Mounting kits for 644H" on page 24 for the special hardware that is available to:

- Mount a 644H to a DIN rail. (see Table 3 on page 10)
- Retrofit a new 644H to replace an existing 644H transmitter in an existing threaded sensor connection head. (see Table 3 on page 10)

Weight

Code	Options	Weight
644H	HART, Head Mount Transmitter	95 g (3.39 oz)
644H	FOUNDATION fieldbus, Head Mount Transmitter	92 g (3.25 oz)
644H	Profibus PA Head Mount Transmitter	92 g (3.25 oz)
644R	HART, Rail Mount Transmitter	174 g (6.14 oz)
M5	LCD Display	35 g (1.34 oz)
M4	LCD Display with Local Operator Interface	35g (1.34 oz)
J1, J2	Universal Head, 3-conduits, Standard Cover	200 g (7.05 oz)
J1, J2	Universal head, 3-conduits, Meter Cover	307 g (10.83 oz)
J3, J4	Cast SST Universal head, 3-conduits, Standard Cover	2016 g (71.11 oz)
J3, J4	Cast SST Universal head, 3-conduits, Meter Cover	2122 g (74.85 oz)
J5, J6	Aluminum 2-conduits, Universal Head, Standard Cover	577 g (20.35 oz)
J5, J6	Aluminum 2-conduits, Universal Head, Meter Cover	667 g (23.53 oz)
J7, J8	Cast SST Universal Head 2-conduits, Standard, Cover	1620 g (57.14 oz)
J7, J8	Cast SST Universal Head 2-conduits, Meter Cover	1730 g (61.02 oz)
R1, R2	Aluminum Connection Head, Standard Cover	523 g (18.45 oz)
R1, R2	Aluminum Connection Head, Meter Cover	618 g (21.79 oz)
R3, R4	Cast SST Connection Head, Standard Cover	1615 g (56.97 oz)
R3, R4	Cast SST Connection Head, Meter Cover	1747 g (61.62 oz)

Weight (stainless steel housing for biotechnology, pharmaceutical industries, and sanitary applications)

Option code	Standard cover	Meter cover
S1	840 g (27 oz)	995 g (32 oz)
S2	840 g (27 oz)	995 g (32 oz)
S3	840 g (27 oz)	995 g (32 oz)
S4	840 g (27 oz)	995 g (32 oz)

Enclosure ratings (644H)

All available enclosures are Type 4X, IP66, and IP68.

Sanitary housing surface

Surface finish is polished to 32 RMA. Laser etched product marking on housing and standard covers.

Performance Specifications

EMC (ElectroMagnetic Compatibility) NAMUR NE 21 Standard

The 644H HART meets the requirements for NAMUR NE 21 Rating.

Susceptibility	Parameter	Influence
		HART
ESD	■ 6 kV contact discharge ■ 8 kV air discharge	None
Radiated	■ 80 – 1000 MHz at 10 V/m AM	< 1.0%
Burst	■ 1 kV for I.O.	None
Surge	■ 0.5 kV line–line ■ 1 kV line–ground (I.O. tool)	None
Conducted	■ 10 kHz to 80 MHz at 10 V	< 1.0%

CE electromagnetic compatibility compliance testing

The 644 is compliant with Directive 2004/108/EC. Meets the criteria under IEC 61326:2006, IEC 61326-2-3:2006.

Power supply effect

Less than ±0.005% of span per volt

Stability

RTDs and thermocouples have a stability of ±0.15% of output reading or 0.15 °C (whichever is greater) for 24 months

When ordered with the P8 option code:

- RTDs: ±0.25% of reading or 0.25 °C, whichever is greater, for 5 years
- Thermocouples: ±0.5% of reading or 0.5 °C, whichever is greater, for 5 years

Self calibration

The analog-to-digital measurement circuitry automatically self-calibrates for each temperature update by comparing the dynamic measurement to extremely stable and accurate internal reference elements.

Vibration effect

The 644 HART is tested to the following specifications with no effect on performance per IEC 60770-1, 2010:

Frequency	Vibration
10 to 60 Hz	0.35 mm displacement
60 to 1000 Hz	5 g (50 m/s^2) peak acceleration

The 644 Fieldbus and Profibus are tested to the following specifications with no effect on performance per IEC 60770-1: 1999:

Frequency	Vibration
10 to 60 Hz	0.21 mm displacement
60 to 2000 Hz	3 g peak acceleration

Rosemount 644 Sensor connections diagrams

* Rosemount Inc. provides 4-wire sensors for all single element RTDs. You can use these RTDs in 3-wire configurations by leaving the unneeded leads disconnected and insulated with electrical tape.

HART head mount





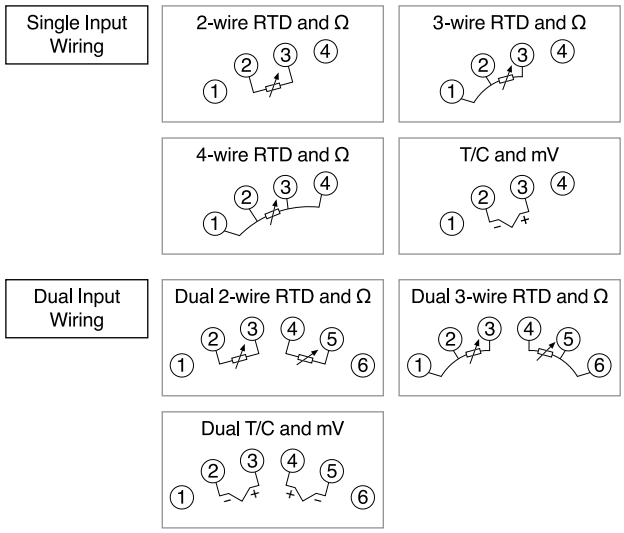

- HART rail mount
- Fieldbus
- Profibus





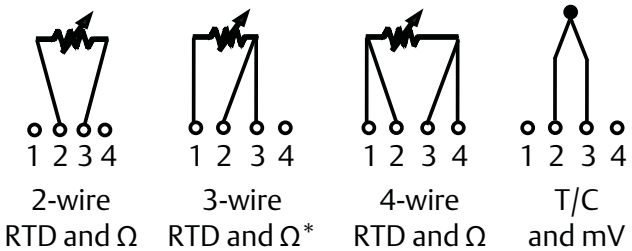

FOUNDATION fieldbus specifications

Function blocks

Resource block

- The resource block contains physical transmitter information including available memory, manufacture identification, device type, software tag, and unique identification.

Transducer block

- The transducer block contains the actual temperature measurement data, including sensor 1 and terminal temperature. It includes information about sensor type and configuration, engineering units, linearization, reranging, damping, temperature correction, and diagnostics.

LCD display block

- The LCD block is used to configure the local display, if an LCD Display is being used.

Analog input (AI)

- Processes the measurement and makes it available on the fieldbus segment.
- Allows filtering, alarming, and engineering unit changes.

PID block

- The transmitter provides control functionality with one PID function block in the transmitter. The PID block can be used to perform single loop, cascade, or feedforward control in the field.

Block	Execution Time (milliseconds)
Resource	–
Transducer	–
LCD Block	–
Analog Input 1	45
Analog Input 2	45
PID 1	60

Turn-on time

Performance within specifications in less than 20 seconds after power is applied, when damping value is set to 0 seconds.

Status

If self-diagnostics detect a sensor burnout or a transmitter failure, the status of the measurement will be updated accordingly. Status may also send the AI output to a safe value.

Power supply

Powered over FOUNDATION fieldbus with standard fieldbus power supplies. The transmitter operates between 9.0 and 32.0 Vdc, 12 mA maximum.

Alarms

The AI function block allows the user to configure the alarms to HI-HI, HI, LO, or LO-LO with hysteresis settings.

Backup link active scheduler (LAS)

The transmitter is classified as a device link master, which means it can function as a Link Active Scheduler (LAS) if the current link master device fails or is removed from the segment.

The host or other configuration tool is used to download the schedule for the application to the link master device. In the absence of a primary link master, the transmitter will claim the LAS and provide permanent control for the H1 segment.

FOUNDATION fieldbus parameters

Schedule Entries	25
Links	16
Virtual Communications Relationships (VCR)	12

Profibus PA specifications

Function blocks

Physical block

- The Physical Block contains physical transmitter information including manufacturer identification, device type, software tag, and unique identification.

Transducer block

- The Transducer Block contains the actual temperature measurement data, including sensor 1 and terminal temperature. It includes information about sensor type and configuration, engineering units, linearization, re-ranging, damping, temperature correction, and diagnostics.

Analog input block (AI)

- The Analog Input Block processes the measurement and makes it available on the Profibus segment. Allows filtering, alarming, and engineering unit changes.

Turn on time

Performance within specifications in less than 20 seconds after power is applied, when damping value is set to 0 seconds.

Power supply

Powered over Profibus with standard fieldbus power supplies. The transmitter operates between 9.0 and 32.0 Vdc,12 mA maximum.

Alarms

The AI function block allows the user to configure the alarms to HI-HI, HI, LO, or LO-LO with hysteresis settings.

4–20 mA / HART Specifications

Power supply

External power supply required. Transmitters operate on 12.0 to 42.4 Vdc transmitter terminal voltage (with 250 ohm load, 18.1 Vdc power supply voltage is required). Transmitter power terminals rated to 42.4 Vdc.

Load limitations

Maximum Load = 40.8 X (Supply Voltage - 12.0)(1)

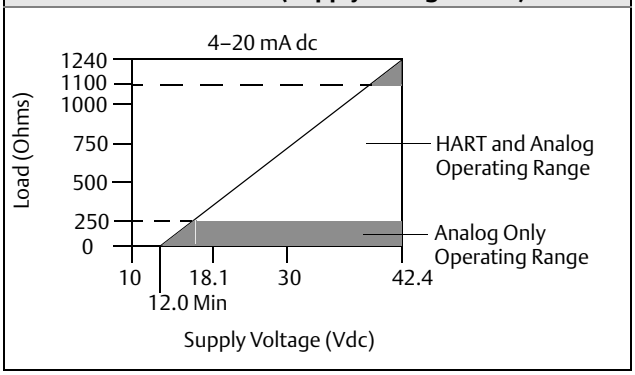

(1) Without transient protection (optional).

Note
HART Communication requires a loop resistance between 250 and 1100 ohms. Do not communicate with the transmitter when power is below 12 Vdc at the transmitter terminals.

Temperature limits

	Operating limit	Storage limit
With LCD(1)	–40 to 185 °F –40 to 85 °C	–50 to 185 °F –45 to 85 °C
Without LCD	–40 to 185 °F –40 to 85 °C	–60 to 248 °F –50 to 120 °C

(1) LCD may not be readable and display updates will be slower at temperatures below -22 °F (-30 °C).

Hardware and software failure mode

The 644 features software driven alarm diagnostics and an independent circuit which is designed to provide backup alarm output if the microprocessor software fails. The alarm direction (HI/LO) is user-selectable using the failure mode switch. If failure occurs, the position of the switch determines the direction in which the output is driven (HI or LO). The switch feeds into the digital-to-analog (D/A) converter, which drives the proper alarm output even if the microprocessor fails. The values at which the transmitter software drives its output in failure mode depends on whether it is configured to standard, custom, or NAMUR-compliant (NAMUR recommendation NE 43, June 1997) operation. Table 7 shows the configuration alarm ranges.

Table 7. Available Alarm Range(1)

	Standard	NAMUR- NE 43 compliant
Linear Output:	$3.9 \leq I^{(2)} \leq 20.5$	$3.8 \leq I \leq 20.5$
Fail High:	$21.75 \leq I \leq 23$	$21.5 \leq I \leq 23$
Fail Low:	$3.5 \leq I \leq 3.75$	$3.5 \leq I \leq 3.6$

(1) Measured in mA.

(2) I = Process Variable (current output).

Custom alarm and saturation level

Custom factory configuration of alarm and saturation level is available with option code C1 for valid values. These values can also be configured in the field using a Field Communicator.

Turn-on time

Performance within specifications in less than 5.0 seconds after power is applied, when damping value is set to 0 seconds.

External transient protection

The Rosemount 470 Transient Protector prevents damage from transients induced by lightning, welding, or heavy electrical equipment. For more information, refer to the Rosemount 470 Transient Protector Product Data Sheet (document number 00813-0100-4191).

Transient protection (option code T1)

The transient protector helps to prevent damage to the transmitter from transients induced on the loop wiring by lightning, welding, heavy electrical equipment, or switch gears. The transient protection electronics are contained in an add-on assembly that attaches to the standard transmitter terminal block. The external ground lug assembly (code G1) is included with the Transient Protector. The transient protector has been tested per the following standard:

- IEEE C62.41-1991 (IEEE 587)/ Location Categories B3. 6kV/3kA peak (1.2 50 Ωs Wave 8 20 Ωs Combination Wave) 6kV/0.5kA peak (100 kHz Ring Wave) EFT, 4kVpeak, 2.5kHz, 5*50nS
- Loop resistance added by protector: 22 ohms max.
- Nominal clamping voltages: 90 V (common mode), 77 V (normal mode)

Accuracy

Table 8. Rosemount 644 Transmitter Accuracy

Sensor options	Sensor reference	Input ranges		Recommended min. span[1]		Digital accuracy[2]		D/A accuracy[3]
2-, 3-, 4-wire RTDs		°C	°F	°C	°F	°C	°F	
Pt 100 (α = 0.00385)	IEC 751	–200 to 850	–328 to 1562	10	18	± 0.15	± 0.27	±0.03% of span
Pt 200 (α = 0.00385)	IEC 751	–200 to 850	–328 to 1562	10	18	± 0.15	± 0.27	±0.03% of span
Pt 500 (α = 0.00385)	IEC 751	–200 to 850	–328 to 1562	10	18	± 0.19	± 0.34	±0.03% of span
Pt 1000 (α = 0.00385)	IEC 751	–200 to 300	–328 to 572	10	18	± 0.19	± 0.34	±0.03% of span
Pt 100 (α = 0.003916)	JIS 1604	–200 to 645	–328 to 1193	10	18	± 0.15	± 0.27	±0.03% of span
Pt 200 (α = 0.003916)	JIS 1604	–200 to 645	–328 to 1193	10	18	± 0.27	± 0.49	±0.03% of span
Ni 120	Edison Curve No. 7	–70 to 300	–94 to 572	10	18	± 0.15	± 0.27	±0.03% of span
Cu 10	Edison Copper Winding No. 15	–50 to 250	–58 to 482	10	18	±1.40	± 2.52	±0.03% of span
Pt 50 (α = 0.00391)	GOST 6651-94	–200 to 550	–328 to 1022	10	18	± 0.30	± 0.54	±0.03% of span
Pt 100 (α = 0.00391)	GOST 6651-94	–200 to 550	–328 to 1022	10	18	± 0.15	± 0.27	±0.03% of span
Cu 50 (α = 0.00426)	GOST 6651-94	–50 to 200	–58 to 392	10	18	±1.34	± 2.41	±0.03% of span
Cu 50 (α = 0.00428)	GOST 6651-94	–185 to 200	–301 to 392	10	18	±1.34	± 2.41	±0.03% of span
Cu 100 (α = 0.00426)	GOST 6651-94	–50 to 200	–58 to 392	10	18	±0.67	± 1.20	±0.03% of span
Cu 100 (α = 0.00428)	GOST 6651-94	–185 to 200	–301 to 392	10	18	±0.67	± 1.20	±0.03% of span
Thermocouples[4]								
Type B[5]	NIST Monograph 175, IEC 584	100 to 1820	212 to 3308	25	45	± 0.77	± 1.39	±0.03% of span
Type E	NIST Monograph 175, IEC 584	–200 to 1000	–328 to 1832	25	45	± 0.20	± 0.36	±0.03% of span
Type J	NIST Monograph 175, IEC 584	–180 to 760	–292 to 1400	25	45	± 0.35	± 0.63	±0.03% of span
Type K[6]	NIST Monograph 175, IEC 584	–180 to 1372	–292 to 2501	25	45	± 0.50	± 0.90	±0.03% of span
Type N	NIST Monograph 175, IEC 584	–200 to 1300	–328 to 2372	25	45	± 0.50	± 0.90	±0.03% of span
Type R	NIST Monograph 175, IEC 584	0 to 1768	32 to 3214	25	45	± 0.75	± 1.35	±0.03% of span
Type S	NIST Monograph 175, IEC 584	0 to 1768	32 to 3214	25	45	± 0.70	± 1.26	±0.03% of span
Type T	NIST Monograph 175, IEC 584	–200 to 400	–328 to 752	25	45	± 0.35	± 0.63	±0.03% of span
DIN Type L	DIN 43710	–200 to 900	–328 to 1652	25	45	± 0.35	± 0.63	±0.03% of span
DIN Type U	DIN 43710	–200 to –600	–328 to 1112	25	45	± 0.35	± 0.63	±0.03% of span
Type W5Re/W26Re	ASTM E 988-96	0 to 2000	32 to 3632	25	45	± 0.70	± 1.26	±0.03% of span
GOST Type L	GOST R 8.585-2001	–200 to 800	–328 to 1472	25	45	± 1.00	± 1.26	±0.03% of span
Other input types								
Millivolt Input		–10 to 100 mV				±0.015 mV		±0.03% of span
2-, 3-, 4-wire Ohm Input		0 to 2000 ohms				±0.45 ohm		±0.03% of span

(1) No minimum or maximum span restrictions within the input ranges. Recommended minimum span will hold noise within accuracy specification with damping at zero seconds.

(2) The published digital accuracy applies over the entire sensor input range. Digital output can be accessed by HART or FOUNDATION fieldbus Communications or Rosemount control system.

(3) Total Analog accuracy is the sum of digital and D/A accuracies. This is not applicable for FOUNDATION fieldbus.

(4) Total digital accuracy for thermocouple measurement: sum of digital accuracy +0.5 °C. (cold junction accuracy).

(5) Digital accuracy for NIST Type B T/C is ±3.0 °C (±5.4 °F) from 100 to 300 °C (212 to 572 °F).

(6) Digital accuracy for NIST Type K T/C is ±0.70 °C (±1.26 °F) from –180 to –90 °C (–292 to –130 °F).

Accuracy example (HART devices)

When using a Pt 100 (α = 0.00385) sensor input with a 0 to 100 °C span:

- Digital accuracy = ±0.15 °C
- D/A accuracy = ±0.03% of 100 °C or ±0.03 °C
- Total accuracy = ±0.18 °C

Accuracy example (FOUNDATION fieldbus and Profibus PA devices)

When using a Pt 100 (α = 0.00385) sensor input:

- Total accuracy = ±0.15 °C
- No D/A accuracy effects apply.

Ambient temperature effect

Table 9. Ambient Temperature Effect

Sensor options	Sensor reference	Input range (°C)	Temperature effects per 1.0 °C (1.8 °F) change in ambient temperature[1]	Range	D/A effect[2]
2-, 3-, 4-wire RTDs					
Pt 100 (α = 0.00385)	IEC 751	-200 to 850	0.003 °C (0.0054 °F)	Entire Sensor Input Range	0.001% of span
Pt 200 (α = 0.00385)	IEC 751	-200 to 850	0.004 °C (0.0072 °F)	Entire Sensor Input Range	0.001% of span
Pt 500 (α = 0.00385)	IEC 751	-200 to 850	0.003 °C (0.0054 °F)	Entire Sensor Input Range	0.001% of span
Pt 1000 (α = 0.00385)	IEC 751	-200 to 300	0.003 °C (0.0054 °F)	Entire Sensor Input Range	0.001% of span
Pt 100 (α = 0.003916)	JIS 1604	-200 to 645	0.003 °C (0.0054 °F)	Entire Sensor Input Range	0.001% of span
Pt 200 (α = 0.003916)	JIS 1604	-200 to 645	0.004 °C (0.0072 °F)	Entire Sensor Input Range	0.001% of span
Ni 120	Edison Curve No. 7	-70 to 300	0.003 °C (0.0054 °F)	Entire Sensor Input Range	0.001% of span
Cu 10	Edison Copper Winding No. 15	-50 to 250	0.03 °C (0.054 °F)	Entire Sensor Input Range	0.001% of span
Pt 50 (α = 0.00391)	GOST 6651-94	-200 to 550	0.004 °C (0.0072 °F)	Entire Sensor Input Range	0.001% of span
Pt 100 (α = 0.00391)	GOST 6651-94	-200 to 550	0.003 °C (0.0054 °F)	Entire Sensor Input Range	0.001% of span
Cu 50 (α = 0.00426)	GOST 6651-94	-50 to 200	0.008 °C (0.0144 °F)	Entire Sensor Input Range	0.001% of span
Cu 50 (α = 0.00428)	GOST 6651-94	-185 to 200	0.008 °C (0.0144 °F)	Entire Sensor Input Range	0.001% of span
Cu 100 (α = 0.00426)	GOST 6651-94	-50 to 200	0.004 °C (0.0072 °F)	Entire Sensor Input Range	0.001% of span
Cu 100 (α = 0.00428)	GOST 6651-94	-185 to 200	0.004 °C (0.0072 °F)	Entire Sensor Input Range	0.001% of span
Thermocouples					
Type B	NIST Monograph 175, IEC 584	100 to 1820	0.014 °C	T ≥ 1000 °C	0.001% of span
			0.032 °C – (0.0025% of (T – 300))	300 °C ≤ T < 1000 °C	0.001% of span
			0.054 °C – (0.011% of (T – 100))	100 °C ≤ T < 300 °C	0.001% of span
Type E	NIST Monograph 175, IEC 584	-200 to 1000	0.005 °C + (0.0043% of T)	All	0.001% of span
Type J	NIST Monograph 175, IEC 584	-180 to 760	0.0054 °C + (0.00029%of T)	T ≥ 0 °C	0.001% of span
			0.0054 °C + (0.0025% of absolute value T)	T < 0 °C	0.001% of span
Type K	NIST Monograph 175, IEC 584	-180 to 1372	0.0061 °C + (0.0054% of T)	T ≥ 0 °C	0.001% of span
			0.0061 °C + (0.0025% of absolute value T)	T < 0 °C	0.001% of span
Type N	NIST Monograph 175, IEC 584	-200 to 1300	0.0068 °C + (0.00036% of T)	All	0.001% of span
Type R	NIST Monograph 175, IEC 584	0 to 1768	0.016 °C	T ≥ 200 °C	0.001% of span
			0.023 °C – (0.0036% of T)	T < 200 °C	0.001% of span
Type S	NIST Monograph 175, IEC 584	0 to 1768	0.016 °C	T ≥ 200 °C	0.001% of span
			0.023 °C – (0.0036% of T)	T < 200 °C	0.001% of span
Type T	NIST Monograph 175, IEC 584	-200 to 400	0.0064 °C	T ≥ 0 °C	0.001% of span
			0.0064 °C +(0.0043% of absolute value T)	T < 0 °C	0.001% of span
DIN Type L	DIN 43710	-200 to 900	0.0054 °C + (0.00029% of T)	T ≥ 0 °C	0.001% of span
			0.0054 °C + (0.0025% of absolute value T)	T < 0 °C	0.001% of span

Table 9. Ambient Temperature Effect

Sensor options	Sensor reference	Input range (°C)	Temperature effects per 1.0 °C (1.8 °F) change in ambient temperature[1]	Range	D/A effect[2]
DIN Type U	DIN 43710	-200 to 600	0.0064 °C	T ≥ 0 °C	0.001% of span
			0.0064 °C + (0.0043% of absolute value T)	T < 0 °C	0.001% of span
Type W5Re/W26Re	ASTM E 988-96	0 to 2000	0.016 °C	T ≥ 200 °C	0.001% of span
			0.023 °C – (0.0036% of T)	T < 200 °C	0.001% of span
GOST Type L	GOST R 8.585-2001	-200 to 800	0.007 °C	T ≥ 0 °C	0.001% of span
			0.007 °C – (0.003% of absolute value T)	T < 0 °C	0.001% of span
Other input types					
Millivolt Input		-10 to 100 mV	0.0005 mV	Entire Sensor Input Range	0.001% of span
2-, 3-, 4-wire Ohm		0 to 2000 Ω	0.0084 Ω	Entire Sensor Input Range	0.001% of span

(1) Change in ambient is with reference to the calibration temperature of the transmitter 68 °F (20 °C) from factory.

(2) Does not apply to FOUNDATION fieldbus.

Temperature effects example (HART devices)

When using a Pt 100 (α = 0.00385) sensor input with a 0–100 °C span at 30 °C ambient temperature:

- Digital Temperature Effects: 0.003 °C x (30 - 20) = 0.03 °C
- D/A Effects: [0.001% of 100] x (30 - 20) = 0.01 °C
- Worst Case Error: Digital + D/A + Digital Temperature Effects + D/A Effects = 0.15 °C + 0.03 °C + 0.03 °C + 0.01 °C = 0.22 °C
- Total Probable Error: $\sqrt{0.15^2 + 0.03^2 + 0.03^2 + 0.01^2} = 0.16°C$

Temperature effects examples (FOUNDATION fieldbus devices and Profibus PA)

When using a Pt 100 (α = 0.00385) sensor input at 30 °C span at 30 °C ambient temperature:

- Digital Temperature Effects: 0.003 °C x (30 - 20) = 0.03 °C
- D/A Effects: No D/A effects apply.
- Worst Case Error: Digital + Digital Temperature Effects = 0.15 °C + 0.03 °C = 0.18 °C
- Total Probable Error: $\sqrt{0.15^2 + 0.03^2} = 0.153°C$

Table 10. Transmitter accuracy when ordered with option code P8

Sensor options	Sensor reference	Input ranges		Minimum span[1]		Digital accuracy[2]		D/A accuracy[3][4]
2-, 3-, 4-wire RTDs		°C	°F	°C	°F	°C	°F	
Pt 100 (α = 0.00385)	IEC 751	–200 to 850	–328 to 1562	10	18	± 0.10	± 0.18	±0.02% of span
Pt 200 (α = 0.00385)	IEC 751	–200 to 850	–328 to 1562	10	18	± 0.22	± 0.40	±0.02% of span
Pt 500 (α = 0.00385)	IEC 751	–200 to 850	–328 to 1562	10	18	± 0.14	± 0.25	±0.02% of span
Pt 1000 (α = 0.00385)	IEC 751	–200 to 300	–328 to 572	10	18	± 0.10	± 0.18	±0.02% of span
Pt 100 (α = 0.003916)	JIS 1604	–200 to 645	–328 to 1193	10	18	± 0.10	± 0.18	±0.02% of span
Pt 200 (α = 0.003916)	JIS 1604	–200 to 645	–328 to 1193	10	18	± 0.22	± 0.40	±0.02% of span
Ni 120	Edison Curve No. 7	–70 to 300	–94 to 572	10	18	± 0.08	± 0.14	±0.02% of span
Cu 10	Edison Copper Winding No. 15	–50 to 250	–58 to 482	10	18	±1.00	± 1.80	±0.02% of span
Pt 50 (α=0.00391)	GOST 6651-94	–200 to 550	–328 to 1022	10	18	±0.20	±0.36	±0.02% of span
Pt 100 (α=0.00391)	GOST 6651-94	–200 to 550	–328 to 1022	10	18	±0.10	±0.18	±0.02% of span
Cu 50 (α=0.00426)	GOST 6651-94	–50 to 200	–58 to 392	10	18	±0.34	±0.61	±0.02% of span
Cu 50 (α=0.00428)	GOST 6651-94	–185 to 200	–301 to 392	10	18	±0.34	±0.61	±0.02% of span
Cu 100 (α=0.00426)	GOST 6651-94	–50 to 200	–58 to 392	10	18	±0.17	±0.31	±0.02% of span
Cu 100 (α=0.00428)	GOST 6651-94	–185 to 200	–301 to 392	10	18	±0.17	±0.31	±0.02% of span
Thermocouples[5]								
Type B[6]	NIST Monograph 175, IEC 584	100 to 1820	212 to 3308	25	45	± 0.75	± 1.35	±0.02% of span
Type E	NIST Monograph 175, IEC 584	–200 to 1000	–328 to 1832	25	45	± 0.20	± 0.36	±0.02% of span
Type J	NIST Monograph 175, IEC 584	–180 to 760	–292 to 1400	25	45	± 0.25	± 0.45	±0.02% of span
Type K[7]	NIST Monograph 175, IEC 584	–180 to 1372	–292 to 2501	25	45	± 0.25	± 0.45	±0.02% of span
Type N	NIST Monograph 175, IEC 584	–200 to 1300	–328 to 2372	25	45	± 0.40	± 0.72	±0.02% of span
Type R	NIST Monograph 175, IEC 584	0 to 1768	32 to 3214	25	45	± 0.60	± 1.08	±0.02% of span
Type S	NIST Monograph 175, IEC 584	0 to 1768	32 to 3214	25	45	± 0.50	± 0.90	±0.02% of span
Type T	NIST Monograph 175, IEC 584	–200 to 400	–328 to 752	25	45	± 0.25	± 0.45	±0.02% of span
DIN Type L	DIN 43710	–200 to 900	–328 to 1652	25	45	± 0.35	± 0.63	±0.02% of span
DIN Type U	DIN 43710	–200 to 600	–328 to 1112	25	45	± 0.35	± 0.63	±0.02% of span
Type W5Re/W26Re	ASTM E 988-96	0 to 2000	32 to 3632	25	45	± 0.70	± 1.26	±0.02% of span
GOST Type L	GOST R 8.585-2001	–200 to 800	–392 to 1472	25	45	± 0.25	± 0.45	±0.02% of span
Other input types								
Millivolt Input		–10 to 100 mV		3 mV		±0.015 mV		±0.02% of span
2-, 3-, 4-wire Ohm Input		0 to 2000 ohms		20 ohm		±0.35 ohm		±0.02% of span

(1) No minimum or maximum span restrictions within the input ranges. Recommended minimum span will hold noise within accuracy specification with damping at zero seconds.

(2) Digital accuracy: Digital output can be accessed by the Field Communicator.

(3) Total Analog accuracy is the sum of digital and D/A accuracies.

(4) Applies to HART / 4-20 mA devices.

(5) Total digital accuracy for thermocouple measurement: sum of digital accuracy +0.25 °C (0.45 °F) (cold junction accuracy).

(6) Digital accuracy for NIST Type B is ±3.0 °C (±5.4 °F) from 100 to 300 °C (212 to 572 °F).

(7) Digital accuracy for NIST Type K is ±0.50 °C (±0.9 °F) from –180 to –90 °C (–292 to –130 °F).

Reference accuracy example (HART only)

When using a Pt 100 (α = 0.00385) sensor input with a 0 to 100 °C span: Digital Accuracy would be ±0.10 °C, D/A accuracy would be ±0.02% of 100 °C or ±0.02 °C, Total = ±0.12 °C.

Differential capability exists between any two sensor types (dual-sensor option)

For all differential configurations, the input range is X to Y where:

- X = Sensor 1 minimum – Sensor 2 maximum *and*
- Y = Sensor 1 maximum – Sensor 2 minimum.

Rosemount 644 Dimensional Drawings

644H (DIN A Head Mount)

HART device shown with captivated screw terminals

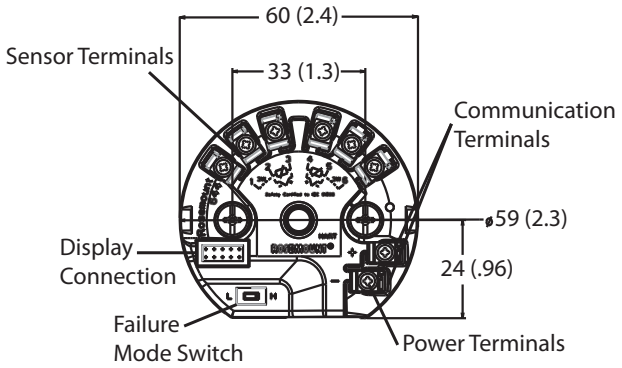

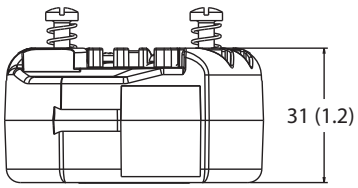

FOUNDATION fieldbus and Profibus device shown with standard compression screw terminals

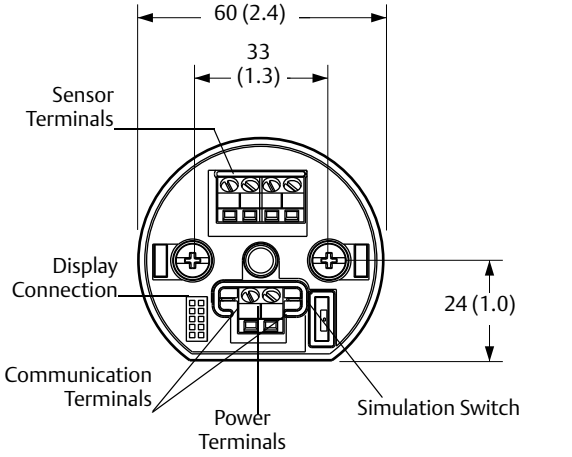

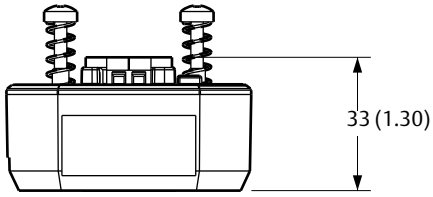

Dimensions are in millimeters (inches).

644 Rail Mount

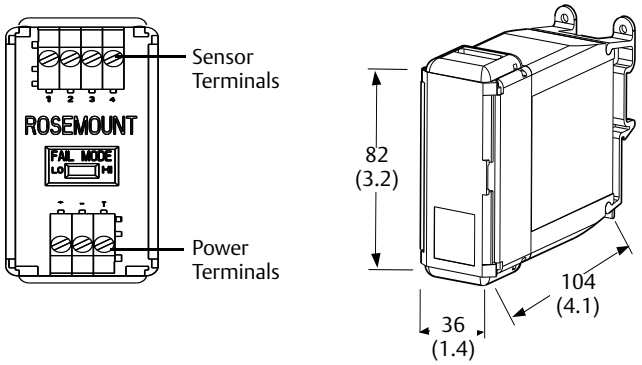

Dimensions are in millimeters (inches).

Mounting kits for 644H

644R rail & walls clips

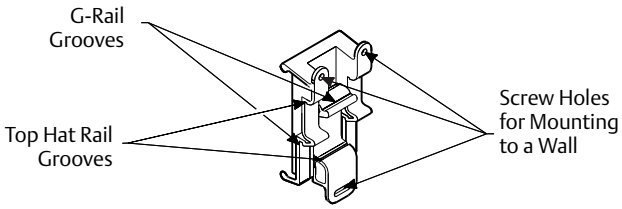

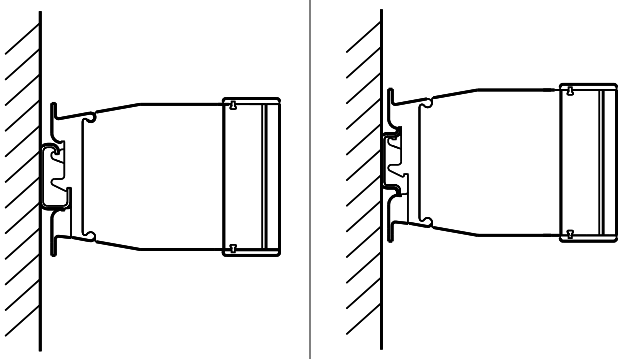

(part number 03044-4103-0001)

644H rail clips

G-rail (asymmetric)	Top hat rail (symmetric)
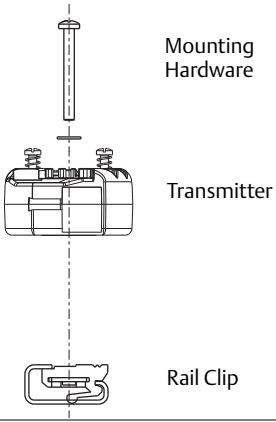	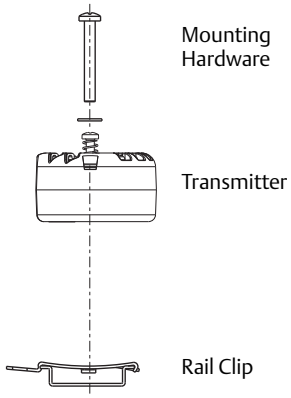

Note: Kit (part number 00644-5301-0010) includes mounting hardware and both types of rail kits.

644H retrofit kit

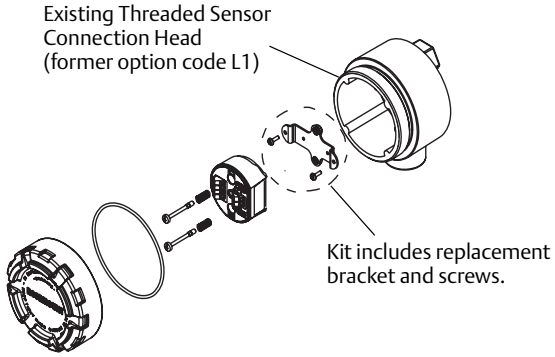

Note: Kit (part number 00644-5321-0010) includes a new mounting bracket and the hardware necessary to facilitate the installation.

Threaded-sensor universal head (option code J5, J6, J7 or J8)

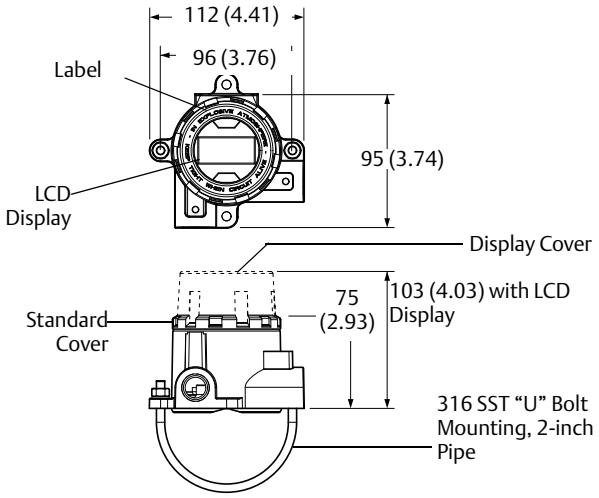

DIN style sensor connection head (option code R1, R2, R3 or R4)

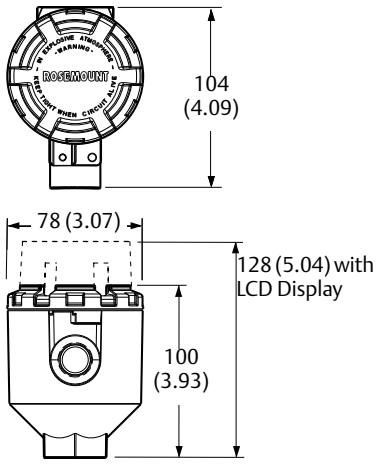

Note: A "U" Bolt is shipped with each head unless assembly option XA is ordered.

Dimensions are in millimeters (inches).

Threaded sensor universal head, 3-conduit (option code J1 or J2)

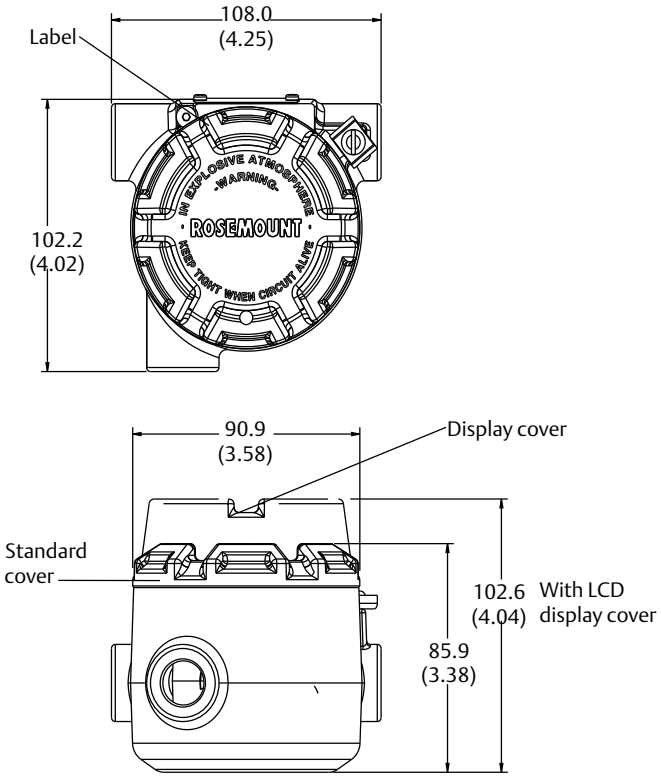

Rosemount 644 with transient protector (option code T1)

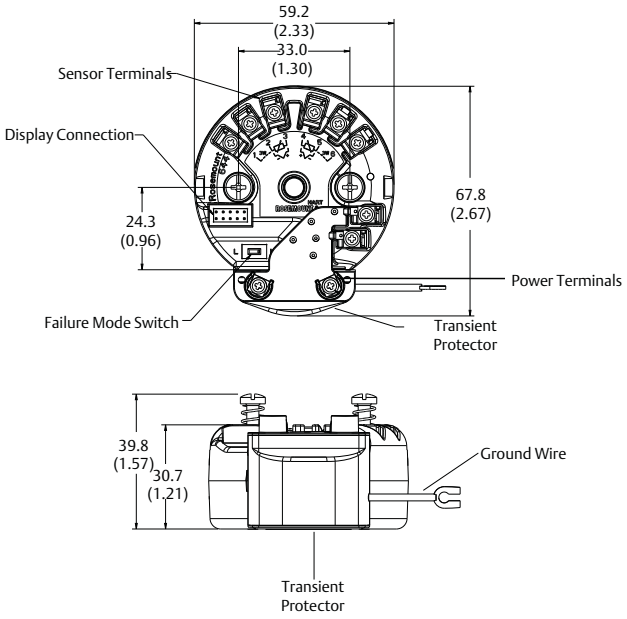

Note: Option code T1 requires the use of J1, J2, J3 or J4 enclosure option.

Dimensions are in millimeters (inches).

Accessory dimensional drawings

Stainless steel housing for biotechnology, pharmaceutical industries, and sanitary applications

Sanitary housing (Option Code S1, S2, S3, S4)

Standard cover

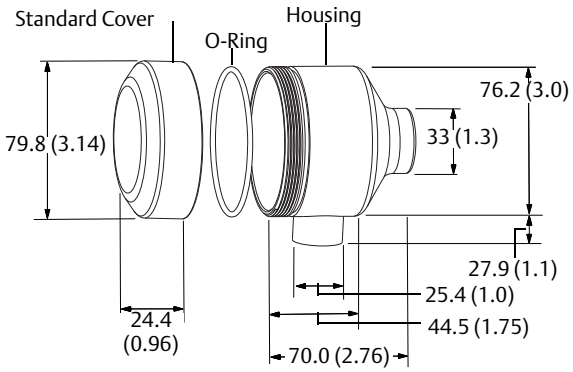

LCD display cover

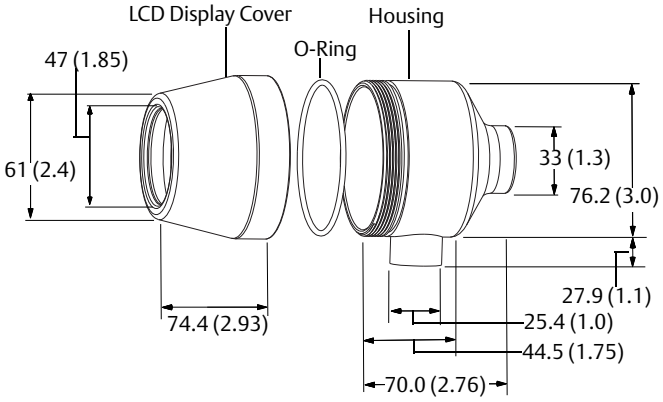

Dimensions are in millimeters (inches).

Display drawings

LCD display	Enhanced display with local operator interface
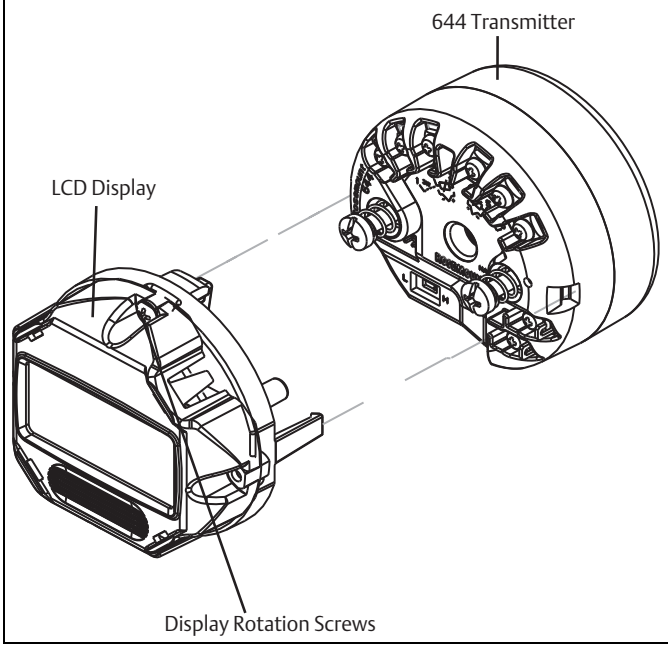	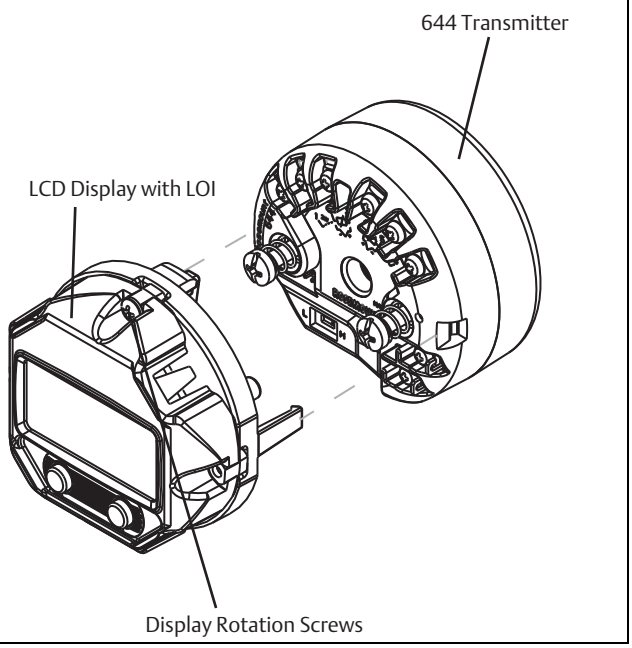

Optional mounting brackets

Optional transmitter mounting brackets

Option code B4 bracket

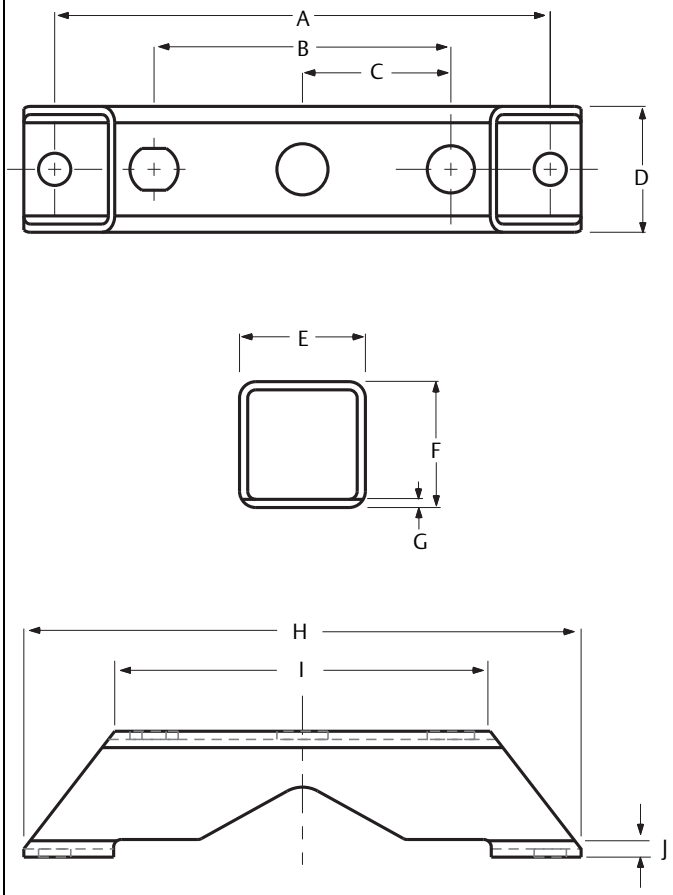

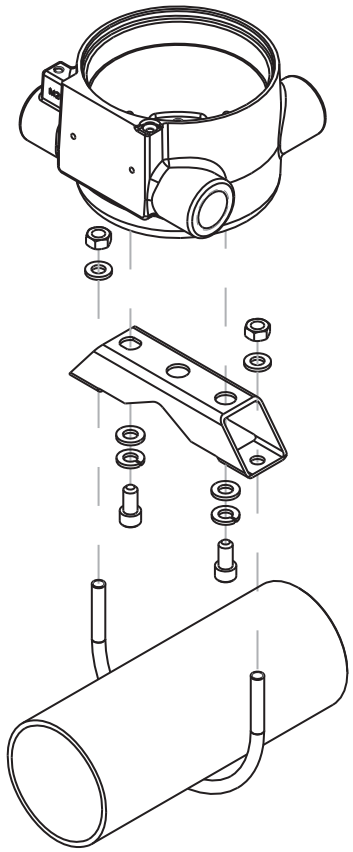

A. 100.00 (3.94)
B. 59.89 (2.358)
C. 29.95 (1.18)
D. 25.4 (1.00)
E. 25.4 (1.00)
F. 25.4 (1.00)
G. 1.65 (0.065)
H. 112.45 (4.43)
I. 75.77 (2.98)
J. 3.56 (0.14)

Dimensions are in millimeters (inches).

Option code B5 bracket

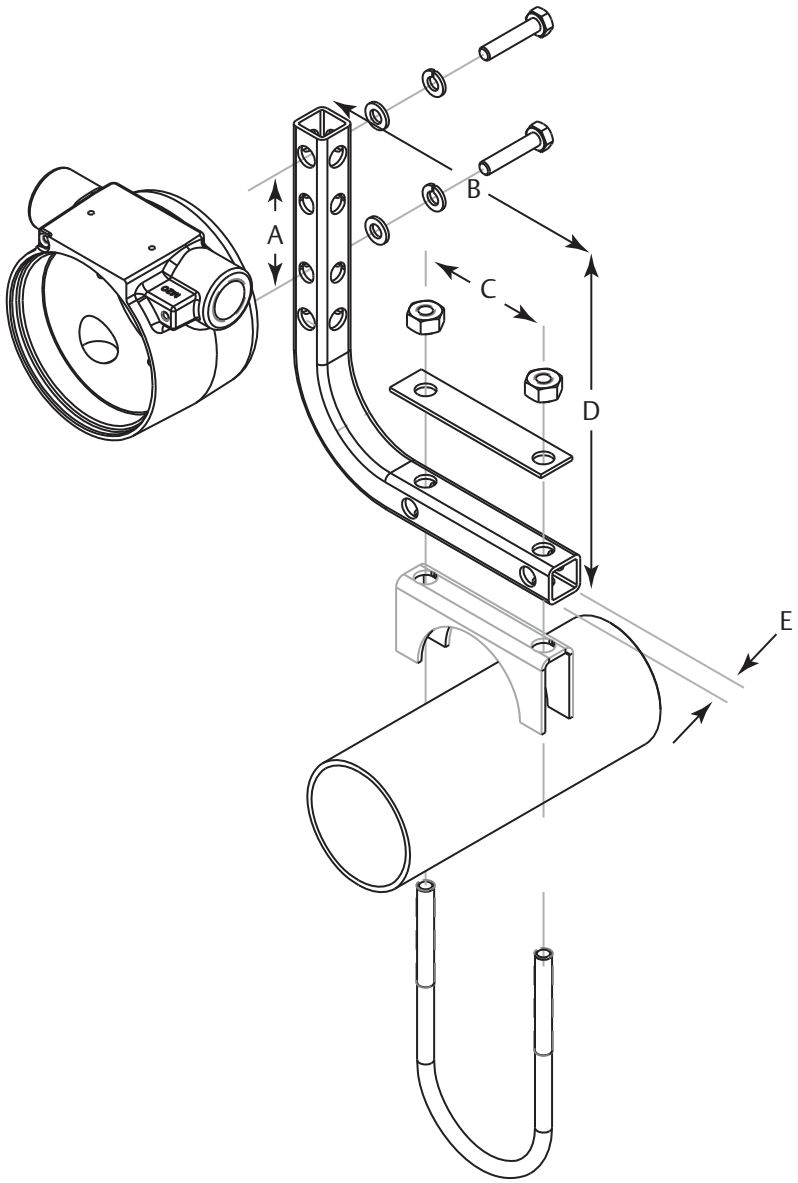

A. 59.89 (2.358)
B. 156.2 (6.15)
C. 71.4 (2.81)
D. 175.3 (6.9)
E. 19.05 (.75)

Dimensions are in millimeters (inches).

Configuration

Transmitter configuration

The transmitter is available with standard configuration setting for either HART (see Standard HART configuration), FOUNDATION fieldbus (see Standard Foundation fieldbus configuration) or Profibus PA (see Standard Profibus PA configuration). The configuration settings and block configuration may be changed in the field with Emerson's DeltaV®, AMS™ Suite, Handheld Field Communicator or other host or configuration tool.

Standard HART configuration

Unless specified, the transmitter will be shipped as follows:

Sensor Type	RTD, Pt 100 (α=0.00385, 4-wire)
4 mA Value	0 °C
20 mA Value	100 °C
Output	Linear with temperature
Saturation Levels	3.9 / 20.5 mA
Damping	5 sec.
Line Voltage Filter	50 Hz
Alarm	High (21.75 mA)
LCD (when installed)	Engineering Units and mA
Tag	See "Tagging" on page 10

Standard FOUNDATION fieldbus configuration

Unless otherwise specified, the transmitter will be shipped as follows:

Sensor Type: RTD, Pt 100 (α=0.00385, 4-wire)
Damping: 5 sec.
Units of Measurement: °C
Line Voltage Filter: 50 Hz
Software Tag: See Tagging
Function Blocks Tags: ■ Resource Block: Resource ■ Transducer Block: Transducer ■ LCD Block: LCD ■ Analog Input Blocks: AI 1300, AI 1400 ■ PID Block: PID 1500
Alarm Limits of AI 1300, AI 1400 ■ HI-HI: Infinity ■ HI: Infinity ■ LO: Infinity ■ LO-LO: Infinity
Local Display (when installed): Engineering Units of Temperature

Standard block configuration

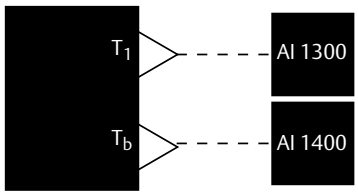

Note:
T_1 = Sensor Temperature
T_b = Terminal Temperature

Final station

AI Blocks are scheduled for 1 second. AI Blocks are linked as shown above.

Standard Profibus PA configuration

Unless specified, the transmitter will be shipped as follows:

Device Address: 126
Sensor Type: RTD, Pt 100 (α=0.00385, 4-wire)
Damping: 5 sec.
Units of Measurement: °C
Line Voltage Filter: 50 Hz
Software Tag: See Tagging
Alarm Limits: ■ HI-HI: Infinity ■ HI: Infinity ■ LO: - Infinity ■ LO-LO: Infinity
Local Display (when installed): Engineering Units of Temperature

Custom configuration

Custom configurations are to be specified when ordering. This configuration must be the same for all sensors. The following table lists the necessary requirements to specify a custom configuration.

	Option code	Customization available
HART	**C1**: Factory Configuration Data (CDS required) Also needs option code: **...DC** **...DC** **...M4 or M5**	■ **Date**: day/month/year ■ **Descriptor**: 8 alphanumeric characters ■ **Message**: 32 alphanumeric characters ■ **Hardware Tag**: 13 Characters ■ **Software Tag**: 8 Characters ■ Sensor Type and Connection ■ Measurement Range and Units ■ Damping Value ■ **Failure Mode:** High or Low ■ **Hot Backup:** Mode and PV ■ **Sensor Drift Alert:** Mode, Limit and Units ■ **Display Configuration**: Choose what will be shown on the LCD display ■ **Custom Alarm and saturation levels**: Choose custom High and Low Alarm and Saturation levels ■ **Security information:** Write Protection, HART Lock and Local Operator Interface Password
	C2:Transmitter – Sensor Matching	■ The transmitters are designed to accept Callendar-Van Dusen constants from a calibrated RTD. Using these constants, the transmitter generates a custom curve to match the sensor-specific curve. Specify a Series 65, 65, or 78 RTD sensor on the order with a special characterization curve (V or X8Q4 option). These constants will be programmed into the transmitter with this option.
	A1, CN, or C8: Alarm Level Configuration	■ **A1:** NAMUR Alarm and Saturation Levels, with High Alarm configured ■ **CN:** NAMUR Alarm and Saturation Levels, with Low Alarm configured ■ **C8:** Low Alarm (Standard Rosemount Alarm and Saturation Values)
	Q4: Three-Point Calibration with Certificate	■ Calibration certificate. Three-Point calibration at 0, 50 and 100% with certificate.
	C4: Five-Point Calibration	■ Will include five-point calibration at 0, 25, 50, 75, and 100% analog and digital output points. Use with Calibration Certificate Q4
	HR7: HART Revision configuration	■ Your 644 Head mount device is HART revision selectable. Order the HR7 code to configure your device to operate in HART Revision 7 mode. Your device is also configurable in the field. Refer to the 644 Quick Installation Guide or Reference Manual for more instructions. ■ **Long Software Tag:** 32 Characters

	Option code	Requirements/specification
FOUNDATION fieldbus	C1: Factory Configuration Data (CDS required)	Date: day/month/year Descriptor: 16 alphanumeric characters Message: 32 alphanumeric characters
	C2:Transmitter – Sensor Matching	The transmitters are designed to accept Callendar-Van Dusen constants from a calibrated RTD. Using these constants, the transmitter generates a custom curve to match the sensor-specific curve. Specify a Series 65, 65, or 78 RTD sensor on the order with a special characterization curve (V or X8Q4 option). These constants will be programmed into the transmitter with this option.
	C4: Five-Point Calibration	Will include five-point calibration at 0, 25, 50, 75, and 100% analog and digital output points. Use with Calibration Certificate Q4.
	Q4: Three-Point Calibration with Certificate	Calibration certificate. *Three-Point calibration with certificate.*

	Option code	Requirements/specification
Profibus PA	C1: Factory Configuration Data (CDS required)	Date: day/month/year Descriptor: 16 alphanumeric characters Message: 32 alphanumeric characters
	C2:Transmitter – Sensor Matching	The transmitters are designed to accept Callendar-Van Dusen constants from a calibrated RTD. Using these constants, the transmitter generates a custom curve to match the sensor-specific curve. Specify a Series 65, or 78 RTD sensor on the order with a special characterization curve (V or X8Q4 option). These constants will be programmed into the transmitter with this option.
	C4: Five-Point Calibration	Will include five-point calibration at 0, 25, 50, 75, and 100% analog and digital output points. Use with Calibration Certificate Q4.
	Q4: Three-Point Calibration with Certificate	Calibration certificate. *Three-Point calibration with certificate.*

Specifications and reference data for 644 HART (device revision 7 or previous)

Functional specifications

Inputs
User-selectable; sensor terminals rated to 42.4 Vdc. See "Accuracy" on page 18 for sensor options.

Output
Single 2-wire device with either 4-20 mA/HART, linear with temperature or input. Device supports protocol revision HART 5.

Isolation
Input/output isolation tested to 600 Vrms.

Local display
The optional five-digit integral LCD Display includes a floating or fixed decimal point. It can also display engineering units (°F, °C, °R, K, Ω, and mV), mA, and percent of span. The display can be configured to alternate between selected display options. Display settings are preconfigured at the factory according to the standard transmitter configuration. They can be reconfigured in the field using a compliant field communicator.

Humidity limits
0–95% relative humidity

Update time
≤ 0.5 sec.

Accuracy (default configuration) PT 100
HART (0-100 °C): ±0.18 °C

Table 11. 644 HART legacy display kits

	Kit part number
Display Only	00644-4430-0002
Display and Aluminum, Housing Cover(1)	00644-4430-0001
Display and SST Housing Cover(1)	00644-4430-0011

(1) Covers provided are compatible with the 3 in (76mm) Universal Junction Box and Rosemount Connection Head enclosure styles.

Physical specifications

Electrical connections

Model	Power and sensor terminals
644H	Compression screws permanently fixed to terminal block

Field communicator connections

Communication terminals	
644H	Clips permanently fixed to terminal block

Materials of construction

Electronics housing and terminal block	
644H	*Noryl*® glass reinforced
Enclosure (options J5, J6)	
Housing	Low-copper aluminum
Paint	Polyurethane
Cover O-ring	Buna-N

Materials of constructions (stainless steel housing for biotechnology, pharmaceutical industries, and sanitary applications)
Housing and Standard Meter Cover

- 316 SST

Cover O-Ring

- Buna-N

Mounting
The 644H installs in a connection head or universal head mounted directly on a sensor assembly, apart from a sensor assembly using a universal head, or to a DIN rail using an optional mounting clip.

Special mounting considerations
See "Mounting kits for 644H" on page 24 for the special hardware that is available to:

- Mount a 644H to a DIN rail. (see page 23)
- Retrofit a new 644H to replace an existing 644H transmitter in an existing threaded sensor connection head.(see Table 3 on page 10)

Weight

Code	Options	Weight
644H	HART, Head Mount Transmitter	95 g (3.39 oz)
644H	FOUNDATION fieldbus, Head Mount Transmitter	92 g (3.25 oz)
644H	Profibus PA Head Mount Transmitter	92 g (3.25 oz)
644R	HART, Rail Mount Transmitter	174 g (6.14 oz)
M5	LCD Display	35 g (1.34 oz)
J5, J6	Universal Head, Standard Cover	577 g (20.35 oz)
J5, J6	Universal Head, Meter Cover	667 g (23.53 oz)
J7, J8	SST Universal Head, Std. Cover	1620 g (57.14 oz)
J7, J8	SST Universal Head, Meter Cover	1730 g (61.02 oz)

Weight (stainless steel housing for biotechnology, pharmaceutical industries, and sanitary applications)

Option code	Standard cover	Meter cover
S1	840 g (27 oz)	995 g (32 oz)
S2	840 g (27 oz)	995 g (32 oz)
S3	840 g (27 oz)	995 g (32 oz)
S4	840 g (27 oz)	995 g (32 oz)

Enclosure ratings (644H)

All available enclosures are Type 4X, IP66, and IP68.

Sanitary housing surface

Surface finish is polished to 32 RMA. Laser etched product marking on housing and standard covers.

Performance specifications

EMC (electromagnetic compatibility) NAMUR NE 21 Standard

The 644H HART meets the requirements for NAMUR NE 21 Rating.

Susceptibility	Parameter	Influence
		HART
ESD	■ 6 kV contact discharge ■ 8 kV air discharge	None
Radiated	■ 80 – 1000 MHz at 10 V/m AM	< 1.0%
Burst	■ 1 kV for I.O.	None
Surge	■ 0.5 kV line–line ■ 1 kV line–ground (I.O. tool)	None
Conducted	■ 100 kHz to 80 MHz at 10 V	< 1.0%

CE electromagnetic compatibility compliance testing

The 644 is compliant with Directive 2004/108/EC. Meets the criteria under IEC 61326:2006

Power supply effect

Less than ±0.005% of span per volt

Stability

RTDs and thermocouples have a stability of ±0.15% of output reading or 0.15 °C (whichever is greater) for 24 months

Self calibration

The analog-to-digital measurement circuitry automatically self-calibrates for each temperature update by comparing the dynamic measurement to extremely stable and accurate internal reference elements.

Vibration effect

The 644 is tested to the following specifications with no effect on performance per IEC 60770-1, 1999:

Frequency	Vibration
10 to 60 Hz	0.21 mm displacement
60 to 2000 Hz	3 g peak acceleration

Sensor connections

644 Sensor connections diagram

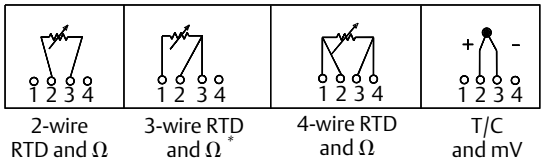

* Rosemount Inc. provides 4-wire sensors for all single element RTDs. You can use these RTDs in 3-wire configurations by leaving the unneeded leads disconnected and insulated with electrical tape.

Tagging

Hardware

- 13 characters total
- Tags are adhesive labels affixed to the side of the transmitter
- Permanently attached to transmitter
- Character height is 1/16-in (1.6 mm)

Software

- The transmitter can store up to 8 characters for the HART protocol
- Order Software Tag with C1 option code

4–20 mA / HART specifications

Power supply

External power supply required. Transmitters operate on 12.0 to 42.4 Vdc transmitter terminal voltage (with 250 ohm load, 18.1 Vdc power supply voltage is required). Transmitter power terminals rated to 42.4 Vdc.

Load limitations

Maximum load = 40.8 X (supply voltage - 12.0)(1)

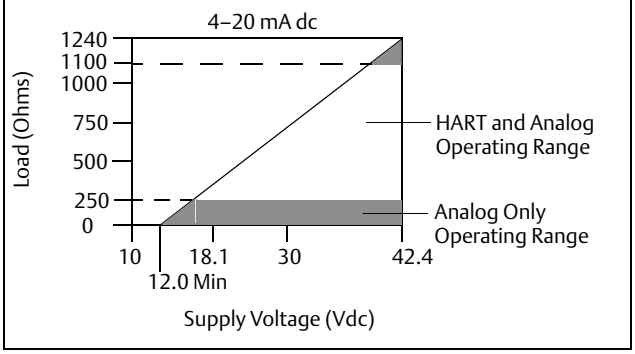

(1) Without transient protection (optional).

Note
HART Communication requires a loop resistance between 250 and 1100 ohms. Do not communicate with the transmitter when power is below 12 Vdc at the transmitter terminals.

Temperature limits

	Operating limit	Storage limit
With LCD(1)	–40 to 185 °F –40 to 85 °C	–50 to 185 °F –45 to 85 °C
Without LCD	–40 to 185 °F –40 to 85 °C	–60 to 248 °F –50 to 120 °C

(1) LCD may not be readable and display updates will be slower at temperatures below -4 °F (-20 °C).

Hardware and software failure mode

The 644 features software driven alarm diagnostics and an independent circuit which is designed to provide backup alarm output if the microprocessor software fails. The alarm direction (HI/LO) is user-selectable using the failure mode switch. If failure occurs, the position of the switch determines the direction in which the output is driven (HI or LO). The switch feeds into the digital-to-analog (D/A) converter, which drives the proper alarm output even if the microprocessor fails. The values at which the transmitter software drives its output in failure mode depends on whether it is configured to standard, custom, or NAMUR-compliant (NAMUR recommendation NE 43, June 1997) operation. Table 7 shows the configuration alarm ranges.

Table 12. Available Alarm Range(1)

	Standard	NAMUR- NE 43 compliant
Linear Output:	$3.9 \leq I^{(2)} \leq 20.5$	$3.8 \leq I \leq 20.5$
Fail High:	$21.75 \leq I \leq 23$	$21.5 \leq I \leq 23$
Fail Low:	$3.5 \leq I \leq 3.75$	$3.5 \leq I \leq 3.6$

(1) Measured in mA.

(2) I = Process Variable (current output).

Custom alarm and saturation level

Custom factory configuration of alarm and saturation level is available with option code C1 for valid values. These values can also be configured in the field using a Field Communicator.

Turn-on time

Performance within specifications in less than 5.0 seconds after power is applied, when damping value is set to 0 seconds.

Transient protection

The Rosemount 470 Transient Protector prevents damage from transients induced by lightning, welding, or heavy electrical equipment. For more information, refer to the Rosemount 470 Transient Protector Product Data Sheet (document number 00813-0100-4191).

Accuracy

For complete accuracy tables by sensor type, see Table 8 on page 18. For ambient temperature effects by sensor type, see Table 9 on page 19. For Enhanced Accuracy specifications, see Table 10 on page 21.

Configuration

For standard and custom configuration information, see “Configuration” on page 30.

Product Certifications

European Directive Information

A copy of the EC Declaration of Conformity can be found at the end of the Quick Start Guide. The most recent revision of the EC Declaration of Conformity can be found at www.rosemount.com.

Ordinary Location Certification from FM Approvals

As standard, the transmitter has been examined and tested to determine that the design meets the basic electrical, mechanical, and fire protection requirements by FM Approvals, a nationally recognized test laboratory (NRTL) as accredited by the Federal Occupational Safety and Health Administration (OSHA).

North America

E5 FM Explosionproof, Dust-Ignitionproof
Certificate: 3006278
Standards Used: FM Class 3600: 2011, FM Class 3615: 2006, FM Class 3616: 2011, FM Class 3810: 2005, NEMA-250: 250: 2003, ANSI/IEC 60529: 2004
Markings: **XP** CL I, DIV 1, GP B, C, D; **DIP** CL II / III, GP E, F, G; T5(-50 °C ≤ Ta ≤ +85 °C); Type 4X, IP66

I5 FM Intrinsic Safety and Nonincendive
Certificate: 3008880 [Fieldbus/Profibus]
Standards Used: FM Class 3600: 1998, FM Class 3610: 2010, FM Class 3611: 2004, FM Class 3810: 2005, NEMA - 250: 1991
Markings: **IS** CL I / II / III, DIV I, GP A, B, C, D, E, F, G; T4A(-50 °C ≤ Ta ≤ +60 °C); **NI** CL I, DIV 2, GP A, B, C, D; T6(-50 °C ≤ Ta ≤ 70 °C), T5(-50 °C ≤ Ta ≤ 85 °C); when installed per Rosemount drawing 00644-2075;

Special Conditions for Safe Use (X):

1. When no enclosure option is selected, the Model 644 Temperature Transmitter shall be installed in an enclosure meeting the requirements of ANSI/ISA S82.01 and S82.03 or other applicable ordinary location standards.
2. FM combination option code K5 is only applicable with Rosemount J5 Universal Head (M20 x 1.5) or Rosemount J6 Universal Head (1/2-14 NPT) enclosure.
3. Enclosure option has to be selected to maintain a Type 4X rating.

Certificate: 3044581 [HART 5, HART 7]
Standards Used: FM Class 3600: 2011, FM Class 3610: 2010, FM Class 3611: 2004, FM Class 3810: 2005, ANSI/NEMA - 250: 1991; ANSI/IEC 60529: 2004; ANSI/ISA 60079-0: 2009; ANSI/ISA 60079-11: 2009
Markings: **IS** CL I / II / III, DIV I, GP A, B, C, D, E, F, G; **IS** Class I, Zone 0 A Ex ia IIC; T4(-50 °C ≤ Ta ≤ +80 °C); T5(-50 °C ≤ Ta ≤ +40 °C); **NI** CL I, DIV 2, GP A, B, C, D; T5(-50 °C ≤ Ta ≤ 80 °C), T6(-50 °C ≤ Ta ≤ 40 °C); when installed per Rosemount drawing 00644-2071; Type 4X; IP68

Special Conditions for Safe Use (X):

1. When no enclosure option is selected, the Model 644 Temperature Transmitter shall be installed in a final enclosure meeting type of protection IP20 and meeting the requirements of ANSI/ISA 61010-1 and ANSI/ISA 60079-0.
2. The Model 644 optional housings may contain aluminum and is considered a potential risk of ignition by impact or friction. Care must be taken into account during installation and use to prevent impact and friction.

I6 CSA Intrinsic Safety and Division 2
Certificate: 1091070
Standards Used: CAN/CSA C22.2 No. 0-M10, CSA Std C22.2 No. 25-1966, CAN/CSA-C22.2 No. 94-M91, CSA Std C22.2 No. 142-M1987, CAN/CSA-C22.2 No. 157-92, CSA Std C22.2 No. 213-M1987, C22.2 No 60529-05
Markings [Fieldbus]: **IS** CL I DIV 1, GP A, B, C, D; T4 (-50 °C ≤ Ta ≤ +60 °C), (-50 °C ≤ Ta ≤ +80 °C); when installed per Rosemount drawing 00644-2076; **CL I DIV 2** GP A, B, C, D; T5(-50 °C ≤ Ta ≤ +85 °C)
Markings [HART 5/HART 7]: **IS** CL I GP A, B, C, D; T4(-50 °C ≤ Ta ≤ +80 °C), T5(-50 °C ≤ Ta ≤ +40 °C), T5(-50 °C ≤ Ta ≤ +50 °C), T6(-50 °C ≤ Ta ≤ +40 °C); **CL I, DIV 2** GP A, B, C, D; when installed per Rosemount drawing 00644-2072

K6 CSA Explosionproof, Dust-Ignitionproof, Intrinsic Safety and Division 2
Certificate: 1091070
Standards Used: CAN/CSA C22.2 No. 0-M10, CSA Std C22.2 No. 25-1966, CSA Std. C22.2 No. 30-M1986, CAN/CSA-C22.2 No. 94-M91, CSA Std C22.2 No. 142-M1987, CAN/CSA-C22.2 No. 157-92, CSA Std C22.2 No. 213-M1987, C22.2 No 60529-05
Markings: **XP** CL I, DIV 1, GP B, C, D; **DIP** CL II / III, DIV 1, GP E, F, G; T5(-50 °C ≤ Ta ≤ +85 °C); Type 4X, IP 66/68
Markings [Fieldbus/Profibus]: **IS** CL I DIV 1, GP A, B, C, D; T4(-50 °C ≤ Ta ≤ +60 °C), (-50 °C ≤ Ta ≤ +80 °C); when installed per Rosemount drawing 00644-2076; **CL I DIV 2** GP A, B, C, D; T5(-50 °C ≤ Ta ≤ +85 °C)
Markings [HART 5/HART 7]: **IS** CL I GP A, B, C, D; T4(-50 °C ≤ Ta ≤ +80 °C), T5(-50 °C ≤ Ta ≤ +40 °C), T5(-50 °C ≤ Ta ≤ +50 °C), T6(-50 °C ≤ Ta ≤ +40 °C); **CL I, DIV 2** GP A, B, C, D; when installed per Rosemount drawing 00644-2072

Europe

E1 ATEX Flameproof
Certificate: FM12ATEX0065X
Standards Used: EN 60079-0: 2012, EN 60079-1: 2007, EN 60529:1991 +A1:2000

Markings: ⟨Ex⟩ II 2 G Ex d IIC T6...T1 Gb, T6(-50 °C ≤ Ta ≤ +40 °C), T5...T1(-50 °C ≤ Ta ≤ +60 °C);
See Table 13 at the end of the Product Certifications section for Process Temperatures.

Special Conditions for Safe Use (X):

1. See certificate for ambient temperature range.
2. The non-metallic label may store an electrostatic charge and become a source of ignition in Group III environments.
3. Guard the LCD cover against impact energies greater than 4 joules.
4. Consult the manufacturer if dimensional information on the flameproof joints is necessary.

I1 ATEX Intrinsic Safety
Certificate: Baseefa03ATEX0499X [Fieldbus/Profibus]; BAS00ATEX1033X [HART 5]; Baseefa12ATEX0101X [HART 7]
Standards Used: EN 60079-0: 2012 (2011 for HART 7); EN 60079-11:2012;

Markings: ⟨Ex⟩ II 1 G Ex ia IIC T4 Ga [Fieldbus/Profibus]; ⟨Ex⟩ II 1 G Ex ia IIC T6...T4 Ga [HART 5/HART 7]
See Table 14 at the end of the Product Certifications section for Entity Parameters and Temperature Classifications.

Special Condition for Safe Use (X):

1. The equipment must be installed in an enclosure which affords it a degree of protection of at least IP20 in accordance with the requirements of IEC 60529. Non-metallic enclosures must have a surface resistance of less than 1GΩ; light alloy or zirconium enclosures must be protected from impact and friction when installed in a Zone 0 environment.

N1 ATEX Type n - with enclosure
Certificate: BAS00ATEX3145
Standards Used: EN 60079-0:2012, EN 60079-15:2010

Markings: ⟨Ex⟩ II 3 G Ex nA IIC T5 Gc (-40 °C ≤ Ta ≤ +70 °C);

NC ATEX Type n - no enclosure
Certificate: Baseefa13ATEX0093X [Fieldbus/Profibus/HART 5], Baseefa12ATEX0102U [HART 7]
Standards Used: EN60079-0:2012 (2011 for HART 7), EN60079-15:2010

Markings: ⟨Ex⟩ II 3 G Ex nA IIC T5 Gc [Fieldbus/Profibus/HART 5]; T5(-40 °C ≤ Ta ≤ +70 °C)
⟨Ex⟩ II 3 G Ex nA IIC T6...T5 Gc [HART 7]; T6(-60 °C ≤ Ta ≤ +40 °C); T5(-60 °C ≤ Ta ≤ +85 °C)

Special Condition for Safe Use (X):

1. The Model 644 Temperature Transmitter must be installed in a suitably certified enclosure such that it is afforded a degree of protection of at least IP54 in accordance with IEC 60529 and EN 60079-15

ND ATEX Dust
Certificate: FM12ATEX0065X
Standards Used: EN 60079-0: 2012, EN 60079-31: 2009, EN 60529:1991 +A1:2000

Markings: ⟨Ex⟩ II 2 D Ex tb IIIC T130°C Db, (-40 °C ≤ Ta ≤ +70 °C); IP66
See Table 13 at the end of the Product Certifications section for Process Temperatures.

Special Conditions for Safe Use (X):

1. See certificate for ambient temperature range.
2. The non-metallic label may store an electrostatic charge and become a source of ignition in Group III environments.
3. Guard the LCD cover against impact energies greater than 4 joules.
4. Consult the manufacturer if dimensional information on the flameproof joints is necessary.

International

E7 IECEx Flameproof
Certificate: IECEx FMG 12.0022X
Standards Used: IEC 60079-0:2011, IEC 60079-1:2007-04, IEC 60079-31:2008
Markings: Ex d IIC T6...T1 Gb, T6(-50 °C ≤ Ta ≤ +40 °C), T5...T1(-50 °C ≤ Ta ≤ +60 °C);
Ex tb IIIC T130°C Db, (-40 °C ≤ Ta ≤ +70 °C); IP66;
See Table 13 at the end of the Product Certifications section for Process Temperatures.

Special Conditions for Safe Use (X):

1. See certificate for ambient temperature range.
2. The non-metallic label may store an electrostatic charge and become a source of ignition in Group III environments.
3. Guard the LCD cover against impact energies greater than 4 joules.
4. Consult the manufacturer if dimensional information on the flameproof joints is necessary.

I7 IECEx Intrinsic Safety
Certificate: IECEx BAS 07.0053X [Fieldbus/Profibus/HART 5]; IECEx BAS 12.0069X [HART 7];

Standards Used: IEC 60079-0: 2011; IEC 60079-11: 2011;
Standards Used: IEC 60079-0: 2011; IEC 60079-11: 2011;
Markings: Ex ia IIC T6...T4 Ga
See Table 14 at the end of the Product Certifications section for Entity Parameters and Temperature Classifications.

Special Condition for Safe Use (X):

1. The equipment must be installed in an enclosure which affords it a degree of protection of at least IP20 in accordance with the requirements of IEC 60529. Non-metallic enclosures must have a surface resistance of less than 1GΩ; light alloy or zirconium enclosures must be protected from impact and friction when installed in a Zone 0 environment.

N7 IECEx Type n - with enclosure
Certificate: IECEx BAS 07.0055
Standards Used: IEC 60079-0:2011, IEC 60079-15:2010
Markings: Ex nA IIC T5/T6 Gc; T5(-60 °C ≤ Ta ≤ +80 °C), T6(-60 °C ≤ Ta ≤ +60 °C)

NG IECEx Type n - no enclosure
Certificate: IECEx BAS 13.0053X [Fieldbus/Profibus/HART 5], IECEx BAS 12.0070U [HART 7]
Standards Used: IEC 60079-0:2011, IEC 60079-15:2010
Markings: Ex nA IIC T5 Gc [Fieldbus/Profibus/HART 5]; T5(-40 °C ≤ Ta ≤ +70 °C)
Ex nA IIC T6...T5 Gc [HART 7]; T6(-60 °C ≤ Ta ≤+40 °C); T5(-60 °C ≤ Ta ≤ +85 °C)

Special Condition for Safe Use (X):

1. The component must be installed in a suitably certified enclosure such that it is afforded a degree of protection of at least IP54 in accordance with IEC 60529, IEC 60079-0 & IEC 60079-15.

NK IECEx Dust
Certificate: IECEx FMG 12.0022X
Standards Used: IEC 60079-0:2011, IEC 60079-1:2007-04, IEC 60079-31:2008
Markings: Ex d IIC T6...T1 Gb, T6(-50 °C ≤ Ta ≤ +40 °C), T5...T1(-50 °C ≤ Ta ≤ +60 °C);
Ex tb IIIC T130°C Db, (-40 °C ≤ Ta ≤ +70 °C); IP66;
See Table 13 at the end of the Product Certifications section for Process Temperatures

Special Conditions for Safe Use (X):

1. See certificate for ambient temperature range.
2. The non-metallic label may store an electrostatic charge and become a source of ignition in Group III environments.
3. Guard the LCD cover against impact energies greater than 4 joules.
4. Consult the manufacturer if dimensional information on the flameproof joints is necessary.

Brazil

E2 INMETRO Flameproof
Certificate: CEPEL 02.0095X
Standards Used: ABNT NBR IEC 60079-0:2008, ABNT NBR IEC 60079-1:2009, ABNT NBR IEC 60529:2009
Markings: Ex d IIC T* Gb
See Table 13 at the end of the Product Certifications section for Process Temperatures.

Special Conditions for Safe Use (X):

1. When installing the temperature transmitter 644H, an adapter should be used to install the temperature sensor, as per Rosemount drawing 00644-1047.
2. The equipment must be installed with adequate insulation at high temperatures when the maximum ambient temperature at the place of installation is greater than 60 °C, and the cable insulation having a temperature of at least 90 °C, to be compatible with the operating temperature of the equipment.

I2 INMETRO Intrinsic Safety
Certificate: CEPEL 02.0096X
Standards Used: ABNT NBR IEC 60079-0:2008, ABNT NBR IEC 60079-11:2009, ABNT NBR IEC 60079-26:2008, ABNT NBR IEC 60529:2009
Markings: Ex ia IIC T* Ga IP66W
See Table 14 at the end of the Product Certifications section for Entity Parameters and Temperature Classifications.

Special Conditions for Safe Use (X):

1. The apparatus must be installed in an enclosure which affords it a degree of protection of at least IP20.
2. Light allow or zirconium enclosures must be protected from impact and friction when installed.
3. When the maximum ambient temperature at the place of installation is greater than 50 °C, the equipment shall be installed with adequate insulation cables the minimum temperature of 90 °C.

China

E3 China Flameproof
Certificate: GYJ111385
Standards Used: GB3836.1-2000, GB3836.2-2000, GB12476.1-2000
Markings: Ex d IIC T6

Special Conditions for Safe Use (X):

1. Temperature Assembly using temperature sensor type 65, 68, 75, 183, 185 are certified.
2. The ambient temperature range is:

Gas/Dust	Ambient Temperature
Gas	-40 °C ≤ Ta ≤ +65 °C
Dust	-40 °C ≤ Ta ≤ +85 °C

3. The earth connection facility in the enclosure should be connected reliably.
4. During installation, use and maintain in explosive gas atmospheres, observe the warning "Do not open when energized". During installation, use and maintain in explosive dust atmosphere, observe the warning "Do not open when an explosive dust atmosphere is present".
5. During installation, there should be no mixture harmful to flameproof housing.
6. During installation in hazardous location, cable glands, conduits and blanking plugs, certified by state-appointed inspection bodies with Ex d II C, DIP A20 IP66 degree, should be used.
7. Maintenance should be done in a non-hazardous location.
8. During installation, use and maintain in explosive dust atmosphere, product enclosure should be cleaned to avoid dust accumulation, but compressed air should not be used.
9. End users is not permitted to change any components inside, but to settle the problem in conjunction with manufacturer to avoid damage to the product.
10. During installation, use and maintenance of this product, observe the following standards:

    GB3836.13-1997 "Electrical apparatus for explosive gas atmospheres Part 13: Repair and overhaul for apparatus used in explosive gas atmospheres"

    GB3836.15-2000 "Electrical apparatus for explosive gas atmospheres Part 15: Electrical installations in hazardous area (other than mines)"

    GB3836.16-2006 "Electrical apparatus for explosive gas atmospheres Part 16: Inspection and maintenance of electrical installation (other than mines)"

    GB50257-1996 "Code for construction and acceptance of electric device for explosion atmospheres and fire hazard electrical equipment installation engineering".

    GB15577-1995 "Safe regulation for explosive dust atmospheres"

    GB12476.2-2006 "Electrical apparatus for use in the presence of combustible dust Part 1-2: Electrical apparatus protected by enclosures and surface temperature limitation-Selection, installation and maintenance"

I3 China Intrinsic Safety
Certificate: GYJ111384X
Standards Used: GB3836.1-2000, GB3836.4-2000
Markings: Ex ia IIC T4/T5/T6

Special Conditions for Safe Use (X):

1. The ambient temperature range is:

When Options do not select Enhance Performance:

Transmitter Output	Maximum Input Power: (W)	T code	Ambient Temperature
A	0.67	T6	-60 °C ≤ Ta ≤ +40 °C
	0.67	T5	-60 °C ≤ Ta ≤ +50 °C
	1	T5	-60 °C ≤ Ta ≤ +40 °C
	1	T4	-60 °C ≤ Ta ≤ +80 °C
F or W	1.3	T4	-50 °C ≤ Ta ≤ +60 °C
	5.32	T4	-50 °C ≤ Ta ≤ +60 °C

When Options select Enhanced Performance:

Maximum Input Power: (W)	T code	Ambient Temperature
0.67	T6	-60 °C ≤ Ta ≤ +40 °C
0.67	T5	-60 °C ≤ Ta ≤ +50 °C
0.80	T5	-60 °C ≤ Ta ≤ +40 °C
0.80	T4	-60 °C ≤ Ta ≤ +80 °C

2.Parameters:

When Options do not select Enhanced Performance

Terminals of power supply (+, -)

Transmitter Output	Maximum Input Voltage: U_i (V)	Maximum Input Current: I_i (mA)	Maximum Input Power: P_i (W)	Maximum Internal Parameters:	
				C_i (nF)	L_i (mH)
A	30	200	0.67/1	10	0
F, W	30	300	1.3	2.1	0
F, W (FISCO)	17.5	380	5.32	2.1	0

Terminals of sensor (1,2,3,4)

Transmitter Output	Maximum Output Voltage: U_o (V)	Maximum Output Current: I_o (mA)	Maximum Output Power: P_o (W)	Maximum Internal Parameters:	
				C_o (nF)	L_o (mH)
A	13.6	80	0.08	75	0
F, W	13.9	23	0.079	7.7	0

When Options select Enhanced Performance:

Terminals of power supply (+, -)

Maximum Input Voltage: U_i (V)	Maximum Input Current: I_i (mA)	Maximum Input Power: P_i (W)	Maximum Internal Parameters:	
			C_i (nF)	L_i (mH)
30	150 (Ta ≤ +80 °C)	0.67/0.8	3.3	0
	170 (Ta ≤ +70 °C)			
	190 (Ta ≤ +60 °C)			

Terminals of sensor (1,2,3,4)

Maximum Output Voltage: U_o (V)	Maximum Output Current: I_o (mA)	Maximum Output Power: P_o (W)	Gas Group	Maximum Internal Parameters:	
				C_o (nF)	L_o (mH)
13.6	80	0.08	IIC	0.816	5.79
			IIB	5.196	23.4
			IIA	18.596	48.06

3.This product complies to the requirements for FISCO field devices specified in IEC60079-27: 2008. For the connection of an intrinsically safe circuit in accordance FISCO model, FISCO parameters of this product are as above.

4.The product should be used with Ex-certified associated apparatus to establish explosion protection system that can be used in explosive gas atmospheres. Wiring and terminals should comply with the instruction manual of the product and associated apparatus.

5.The cables between this product and associated apparatus should be shielded cables (the cables must have insulated shield). The shielded has to be grounded reliably in non-hazardous area.

6.End users are not permitted to change any components insides, but to settle the problem in conjunction with manufacturer to avoid damage to the product.

7.During installation, use and maintenance of this product, observe the following standards:

GB3836.13-1997 "Electrical apparatus for explosive gas atmospheres Part 13: Repair and overhaul for apparatus used in explosive gas atmospheres"

GB3836.15-2000 "Electrical apparatus for explosive gas atmospheres Part 15: Electrical installations in hazardous area (other than mines)"

GB3836.16-2006 "Electrical apparatus for explosive gas atmospheres Part 16: Inspection and maintenance of electrical installation (other than mines)"

GB50257-1996 "Code for construction and acceptance of electric device for explosion atmospheres and fire hazard electrical equipment installation engineering".

N3 China Type n
Certificate: GYJ101421
Standards Used: GB3836.1-2000, GB3836.8-2003
Markings: Ex nA nL IIC T5/T6

Special Conditions for Safe Use (X):

1.The relation among T code, ambient temperature range is as following:

When Options do not select Enhanced Performance:

T code	Ambient Temperature
T5	-40 °C ≤ Ta ≤ +70 °C

When Options select Enhanced Performance:

T code	Ambient Temperature
T6	-60 °C ≤ Ta ≤ +40 °C
T5	-60 °C ≤ Ta ≤ +85 °C

2. Maximum input voltage: 42.4V.

3. Cable glands, conduit or blanking plugs, certified by NEPSI with Ex e or Ex n protection type and appropriate thread type and IP54 degree, should be used on external connections and redundant cable entries.

4. Maintenance should be done in non-hazardous location.

5.End users are not permitted to change any components inside, but to settle the problem in conjunction with manufacturer to avoid damage to the product.

6.During installation, use and maintenance of this product, observe the following standards:

GB3836.13-1997 "Electrical apparatus for explosive gas atmospheres Part 13: Repair and overhaul for apparatus used in explosive gas atmospheres"

GB3836.15-2000 "Electrical apparatus for explosive gas atmospheres Part 15: Electrical installations in hazardous area (other than mines)"

GB3836.16-2006 "Electrical apparatus for explosive gas atmospheres Part 16: Inspection and maintenance of electrical installation (other than mines)"

GB50257-1996 "Code for construction and acceptance of electric device for explosion atmospheres and fire hazard electrical equipment installation engineering"

Japan

E4 Japan Flameproof
Certificate: TC15744 (w/ meter, w/o TC), TC15745 (w/o meter, w/o sensor)
Markings: Ex d IIC T6

Certificate: TC15910 (w/o meter, w/ TC), TC15911 (w/ meter, w/ TC), TC15912 (w/o meter, w/ sensor), TC1593 (w/ meter, w/ sensor)
Markings: Ex d IIB + H2 T4

Combinations

K1 combination of E1, I1, N1, NC, and ND
K2 combination of E2 and I2
K5 combination of E5 and I5
K7 combination of E7, I7, N7, NG, and NK
KA combination of K1 and K6
KB combination of K5 and K6
KC combination of I5 and I6
KD combination of E1, E5, K6, I1, I5, and I6
KD combination of E1, E5, K6, I1, I5, and I6

Tables

Table 13. Process Temperatures

Temperature Class	Ambient Temperature	Process Temperature w/o LCD Cover (°C)			
		No ext.	3”	6”	9”
T6	-50 °C to +40 °C	55	55	60	65
T5	-50 °C to +60 °C	70	70	70	75
T4	-50 °C to +60 °C	100	110	120	130
T3	-50 °C to +60 °C	170	190	200	200
T2	-50 °C to +60 °C	280	300	300	300
T1	-50 °C to +60 °C	440	450	450	450

Table 14. Entity Parameters

	Fieldbus/Profibus	HART 5	HART 7
Voltage U_i (V)	30	30	30
Current I_i (mA)	300	200	150 for Ta ≤ 80 °C 170 for Ta ≤ 70 °C 190 for Ta ≤ 60 °C
Power P_i (W)	1.3 @ T4(-50 °C ≤ Ta ≤ +60 °C)	.67 @ T6(-60 °C ≤ Ta ≤ +40 °C) .67 @ T5(-60 °C ≤ Ta ≤ +50 °C) 1.0 @ T5(-60 °C ≤ Ta ≤ +40 °C) 1.0 @ T4(-60 °C ≤ Ta ≤ +80 °C)	.67 @ T6(-60 °C ≤ Ta ≤ +40 °C) .67 @ T5(-60 °C ≤ Ta ≤ +50 °C) .80 @ T5(-60 °C ≤ Ta ≤ +40 °C) .80 @ T4(-60 °C ≤ Ta ≤ +80 °C)
Capacitance C_i (nF)	2.1	10	3.3
Inductance L_i (mH)	0	0	0

Emerson Process Management
Rosemount Inc.
8200 Market Boulevard
Chanhassen, MN 55317 USA
T (U.S.) 1-800-999-9307
T (International) (952) 906-8888
F (952) 906-8889
www.rosemount.com

Emerson Process Management
Blegistrasse 23
P.O. Box 1046
CH 6341 Baar
Switzerland
T +41 (0) 41 768 6111
F +41 (0) 41 768 6300
www.rosemount.com

Emerson Process Management
Asia Pacific Pte Ltd
1 Pandan Crescent
Singapore 128461
T +65 6777 8211
F +65 6777 0947
Service Support Hotline: +65 6770 8711
Email: Enquiries@AP.EmersonProcess.com
www.rosemount.com

Emerson Process Management
Latin America
1300 Concord Terrace, Suite 400
Sunrise Florida 33323 USA
Tel + 1 954 846 5030

Standard Terms and Conditions of Sale can be found at www.rosemount.com\terms_of_sale
The Emerson logo is a trade mark and service mark of Emerson Electric Co.
Rosemount and the Rosemount logotype are registered trademarks of Rosemount Inc.
PlantWeb is a registered trademark of one of the Emerson Process Management group of companies.
HART and WirelessHART are registered trademarks of the HART Communication Foundation
Modbus is a trademark of Modicon, Inc.
All other marks are the property of their respective owners.
© 2014 Rosemount Inc. All rights reserved.

ROSEMOUNT

EMERSON.
Process Management

Quick Start Guide
00825-0200-4728, Rev BA
June 2013

Rosemount 644H Temperature Transmitter

with 4-20 mA HART (Revision 5 and 7) Protocol



Note:
Before installing the transmitter, confirm the correct Device Driver is loaded on the host systems. See page 3 for System Readiness.

ROSEMOUNT

EMERSON.
Process Management

NOTICE

This installation guide provides basic guidelines for Rosemount 644 transmitters. It does not provide instructions for configuration, diagnostics, maintenance, service, troubleshooting, Explosion-proof, Flameproof, or intrinsically safe (I.S.) installations. Refer to the Rosemount 644 reference manual (document number 00809-0100-4728) for more instruction.
This manual is also available electronically on www.rosemount.com.

WARNING

Explosions could result in death or serious injury:

Installation of this transmitter in an explosive environment must be in accordance with the appropriate local, national, and international standards, codes, and practices. Please review the approvals section of the 644 reference manual for any restrictions associated with a safe installation.

- Before connecting a HART-based communicator in an explosive atmosphere, make sure the instruments in the loop are installed in accordance with intrinsically safe or non-incendive field wiring practices.

Electrical shock can result in death or serious injury.

- Avoid contact with the leads and the terminals. High voltage that may be present on leads can cause electrical shock.

Conduit/Cable Entries

- Unless marked, the conduit/cable entries in the transmitter housing use a $^{1}/_{2}$-14 NPT thread form. Entries marked "M20" are M20 x 1.5 thread form. On devices with multiple conduit entries, all entries will have the same thread form. Only use plugs, adapters, glands, or conduit with a compatible thread form when closing these entries.
- When installing in a Hazardous Location, use only appropriately listed or Ex certified plugs, adapters, or glands in cable/conduit entries.

Contents

System readiness 3
Confirm HART revision capability 3
Confirm correct device driver 3
Transmitter installation 4
Step 1: Set the alarm switch 4
Step 2: Verify configuration 4
Step 3: Mount the transmitter 10
Step 4: Wire And Apply Power 12
Step 5: Perform a loop test 16
Safety Instrumented Systems 17
Product Certifications 18

System readiness

Confirm HART revision capability

- If using HART based control or asset management systems, please confirm the HART capability of those systems prior to transmitter installation. Not all systems are capable of communicating with HART Revision 7 protocol. This transmitter can be configured for either HART Revision 5 or 7.
- For instructions on how to change the HART revision of your transmitter, see Step 2: Verify configuration on page 4.

Confirm correct device driver

- Verify the latest Device Driver files are loaded on your systems to ensure proper communications.
- Download the latest Device Driver at www.emersonprocess.com.en-US/documentation/deviceinstallkits/Pages/AboutDeviceInstallKits.aspx or http://www.hartcomm.org/protocol/products/products.html

Rosemount 644 device revisions and files

Table 1 provides the information necessary to ensure you have the correct Device Driver files and Documentation for your device.

Table 1. Rosemount 644 Device Revisions and Files

Software Date	Identify Device		Find Device Driver Files		Review Instructions	Review Functionality
Date	NAMUR Software Revision	HART Software Revision	HART Universal Revision[1]	Device Revision[2]	Manual Document Number	Changes to Software[3]
June 2012	1.1.1	01	5	8	00809-0100-4728	See footnote 3 for list of changes.
			7	9		

1. *NAMUR Software Revision is located on the hardware tag of the device. HART Software Revision can be read using a HART communication tool.*
2. *Device Driver file names use Device and DD Revision, e.g. 10_01. HART Protocol is designed to enable legacy device driver revisions to continue to communicate with new HART devices. To access new functionality, the new Device Driver must be downloaded. It is recommended to download new Device Driver files to ensure full functionality.*
3. *HART Revision 5 and 7 Selectable, Dual Sensor support, Safety Certified, Advanced Diagnostics (if ordered), Enhanced Accuracy and Stability (if ordered).*

Transmitter installation

Step 1: Set the alarm switch

Set the 644 Alarm Switch before putting the device into operation.

Without a LCD Display

1. Set the loop to manual (if applicable) and disconnect the power.
2. Remove the housing cover.
3. Set the switch to the desired position. H indicates High, L indicates Low. Then reattach the housing cover.
4. Apply power and set the loop to automatic control.

Figure 1. Placement of Alarm Switch

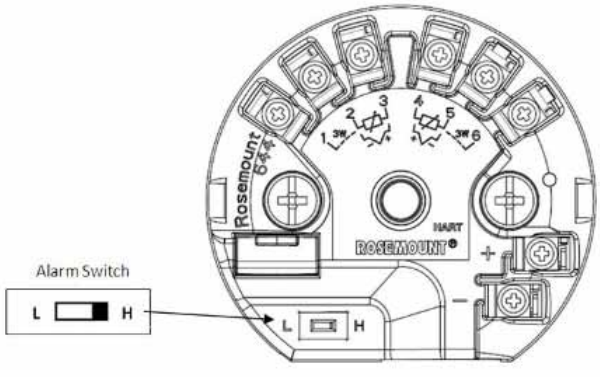

Note

If using an LCD Display, first remove the display by detaching it from the top of the device, set the switch to the desired position and reattach the LCD Display.

Step 2: Verify configuration

Verify the configuration of the Rosemount 644 device upon receiving your transmitter using any HART compliant configuration tool. See the Rosemount 644 Reference Manual (00809-0200-4728) for configuration instructions using AMS Device Manager.

The 644 communicates using the Field Communicator (communication requires a loop resistance between 250 and 1100 ohms). Do not operate when power is below 12 Vdc at the transmitter terminal. Refer to the 644 Reference Manual (document number 00809-0200-4728) and the Field Communicator Reference Manual for more information.

Verify configuration with a field communicator

A Rosemount 644 DD must be installed on the Field communicator to verify the configuration. Fast key sequences for the latest DD are shown in Table 2 on page 6. For fast key sequences using legacy DD's, contact your local Emerson Process Management representative.

Perform the following steps to determine if an upgrade is required.

1. Connect the sensor (see the wiring diagram located on the device's top label).
2. Connect the bench power supply to the power terminals ("+" or "–").
3. Connect a Field Communicator to the loop across a loop resistor or at the power/signal terminals on the transmitter.
4. The following message will appear if the communicator has a previous version of the device descriptors (DDs):

Device Description Not Installed...The Device Description for manufacturer 0x26 model 0x2618 dev rev 8/9 is not installed on the System Card...see Programming Utility for details on Device Description updates...Do you wish to proceed in forward compatibility mode?

If this notice does not appear, the latest DD is installed. If the latest version is not available, the communicator will communicate properly, however, when the transmitter is configured to utilize the advanced features of the transmitter, the user will experience trouble communicating and will be prompted to turn the communicator off. To prevent this from happening, upgrade to the latest DD or answer NO to the question and default to the generic transmitter functionality.

Note
Emerson recommends installing the latest DD to access the complete functionality. Visit *www.fieldcommunicator.com* for information on updating the DD Library.

Field communicator user interface

Two user interfaces are available to configure this device.

The Device Revision 8 and 9 (HART 5 and 7), DD Revision 1 Fast Key Sequence in Table 2 may be used for transmitter configuration and startup.

Figure 2. Device Dashboard Field Communicator Interface

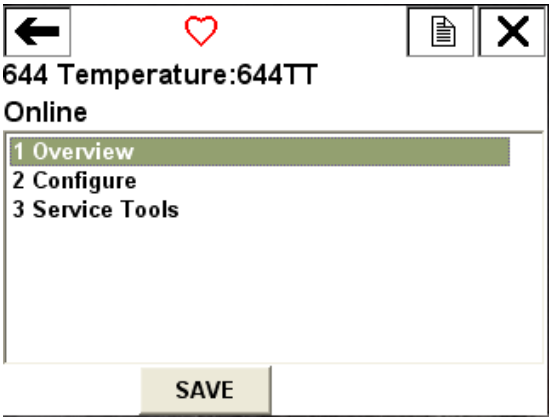

Table 2. Device Revision 8 and 9 (HART 5 and 7), DD Revision 1 Fast Key Sequence

Function	HART 5	HART 7
Alarm Values	2, 2, 5, 6	2, 2, 5, 6
Analog Calibration	3, 4, 5	3, 4, 5
Analog Output	2, 2, 5, 1	2, 2, 5, 1
Average Temperature Setup	2, 2, 3, 3	2, 2, 3, 3
Burst Mode	2, 2, 8, 4	2, 2, 8, 4
Comm Status		1, 2
Configure additional messages		2, 2, 8, 4, 7
Configure Hot Backup	2, 2, 4, 1, 3	2, 2, 4, 1, 3
D/A Trim	3, 4, 4, 1	3, 4, 4, 1
Damping Values	2, 2, 1, 5	2, 2, 1, 6
Date	2, 2, 7, 1, 2	2, 2, 7, 1, 3
Display Setup	2, 1, 4	2, 1, 4
Descriptor	2, 2, 7, 1, 4	2, 2, 7, 1, 5
Device Information	1, 8, 1	1, 8, 1
Differential Temperature Setup	2, 2, 3, 1	2, 2, 3, 1
Drift Alert	2, 2, 4, 2	2, 2, 4, 2

Function	HART 5	HART 7
Filter 50/60 Hz	2, 2, 7, 4, 1	2, 2, 7, 4, 1
First Good Temperature Setup	2, 2, 3, 2	2, 2, 3, 2
Hardware Revision	1, 8, 2, 3	1, 8, 2, 3
HART Lock		2, 2, 9, 2
Intermittent Sensor Detect	2, 2, 7, 4, 2	2, 2, 7, 4, 2
Loop Test	3, 5, 1	3, 5, 1
Locate Device		3, 4, 6, 2
Lock Status		1, 8, 3, 8
LRV (Lower Range Value)	2, 2, 5, 5, 3	2, 2, 5, 5, 3
LSL (Lower Sensor Limit)	2, 2, 1, 7, 2	2, 2, 1, 8, 2
Message	2, 2, 7, 1, 3	2, 2, 7, 1, 4
Open Sensor Holdoff	2, 2, 7, 3	2, 2, 7, 3
Percent Range	2, 2, 5, 2	2, 2, 5, 2
Sensor 1 Configuration	2, 1, 1	2, 1, 1
Sensor 2 Configuration	2, 1, 1	2, 1, 1
Sensor 1 Serial Number	2, 2, 1, 6	2, 2, 1, 7
Sensor 2 Serial Number	2, 2, 2, 7	2, 2, 2, 8
Sensor 1 Type	2, 2, 1, 2	2, 2, 1, 3
Sensor 2 Type	2, 2, 2, 2	2, 2, 2, 3
Sensor 1 Unit	2, 2, 1, 4	2, 2, 1, 5
Sensor 2 Unit	2, 2, 2, 4	2, 2, 2, 5
Sensor 1 Status		2, 2, 1, 2
Sensor 2 Status		2, 2, 2, 2
Simulate Digital Signal		3, 5, 2
Software Revision	1, 8, 2, 4	1, 8, 2, 4
Tag	2, 2, 7, 1, 1	2, 2, 7, 1, 1
Long Tag		2, 2, 7, 1, 2
Terminal Temperature	2, 2, 7, 1	2, 2, 8, 1
URV (Upper Range Value)	2, 2, 5, 5, 2	2, 2, 5, 5, 2
USL (Upper Sensor Limit)	2, 2, 1, 7, 2	2, 2, 1, 8, 2
Variable Mapping	2, 2, 8, 5	2, 2, 8, 5
2-wire Offset Sensor 1	2, 2, 1, 9	2, 2, 1, 10
2-wire Offset Sensor 2	2, 2, 2, 9	2, 2, 2, 10

Input or verify Callendar Van-Dusen constants

If sensor matching is being used with this combination of a transmitter and sensor, verify the constants input.

1. From the HOME screen, select 2 Configure, 2 Manual Setup, 1 Sensor. Set the control loop to manual and select OK.
2. Select Cal VanDusen at the ENTER SENSOR TYPE prompt.
3. Select the appropriate number of wires at the ENTER SENSOR CONNECTION prompt.
4. Enter the Ro, Alpha, Delta, and Beta values from the stainless steel tag attached to the special-order sensor when prompted.
5. Return the control loop to automatic control and select OK.
6. To disable the transmitter-sensor matching feature from the HOME screen select 2 Configure, 2 Manual Setup, 1 Sensor, 10 SensorMatching-CVD. Choose the appropriate sensor type from the ENTER SENSOR TYPE prompt.

Verifying configuration with Local Operator Interface (LOI)

The optional LOI can be used for commissioning the device. The LOI is a two button design. To activate the LOI push any button. LOI button functionality is shown on the bottom corners of the display. See Table 3 and Figure 4 for button operation and menu information.

Figure 3. Local Operator Interface



Table 3. LOI Button Operation

Button	EXIT MENU? NO YES	EXIT MENU ↓ ↵
Left	No	SCROLL
Right	Yes	ENTER

Figure 4. LOI Menu

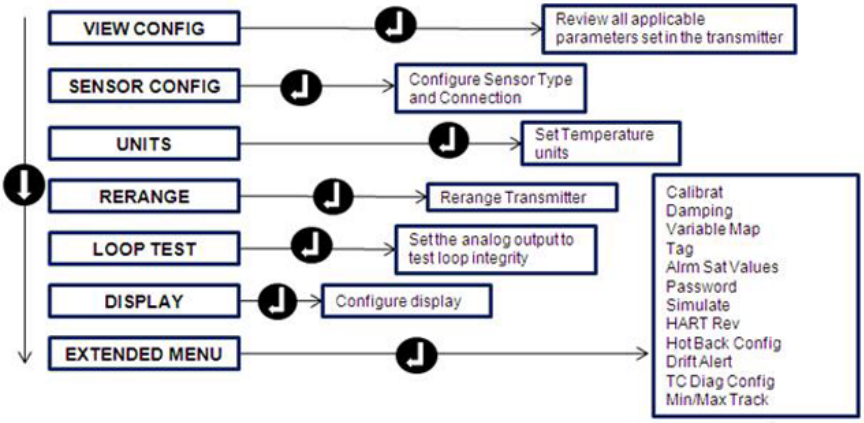

Switch HART revision mode

Not all systems are capable of communicating with HART Revision 7 protocol. This transmitter can be configured for either HART Revision 5 or 7 using a HART capable configuration tool.

Updated configuration menus include a HART Universal Revision parameter that can be configured to 5 or 7 if accessible by your system. See Table 2 for the fast key sequence.

If the HART configuration tool is not capable of communicating with HART Revision 7, the configuration menus in Table 2 will not be available. To switch the HART Universal Revision parameter from generic mode, follow the instructions below.

Go to Configure>Manual Setup>Device Information>Identification>Message

a. To change your device to HART Revision 7, Enter: "HART7" in the Message field
b. To change your device to HART Revision 5, Enter: "HART5" in the Message field

Note
See Table 2 on page 6 to change HART revision when the correct Device Driver is loaded.

Step 3: Mount the transmitter

Mount the transmitter at a high point in the conduit run to prevent moisture from draining into the transmitter housing.

Typical connection head installation

Head mount transmitter with DIN plate style sensor

1. Attach the thermowell to the pipe or process container wall. Install and tighten the thermowell before applying process pressure.
2. Verify the transmitter failure mode switch position.
3. Assemble the transmitter to the sensor. Push the transmitter mounting screws through the sensor mounting plate.
4. Wire the sensor to the transmitter (see Step 4: Wire And Apply Power).
5. Insert the transmitter-sensor assembly into the connection head. Thread the transmitter mounting screw into the connection head mounting holes. Assemble the extension to the connection head. Insert the assembly into the thermowell.
6. If using a cable gland, properly attach the cable gland to a housing conduit entry.
7. Insert the shielded cable leads into the connection head through the cable entry.
8. Connect the shielded power cable leads to the transmitter power terminals. Avoid contact with sensor leads and sensor connections. Connect and tighten the cable gland.
9. Install and tighten the connection head cover. Enclosure covers must be fully engaged to meet explosion-proof requirements.

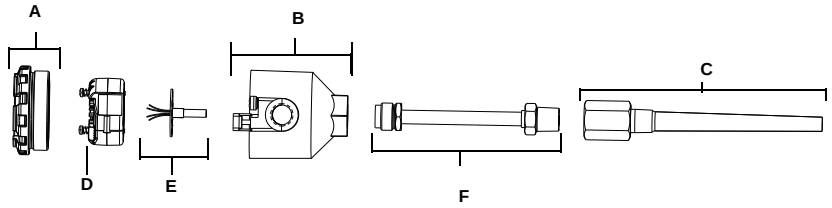

A = Connection Head Cover

B = Connection Head

C = Thermowell

D = Transmitter Mounting Screws

E = Integral Mount Sensor with Flying Leads

F = Extension

Typical universal head installation

Head mount transmitter with threaded sensor (2 or 3 conduit entries)

1. Attach the thermowell to the pipe or process container wall. Install and tighten thermowells before applying process pressure.
2. Attach necessary extension nipples and adapters to the thermowell. Seal the nipple and adapter threads with silicone tape.
3. Screw the sensor into the thermowell. Install drain seals if required for severe environments or to satisfy code requirements.
4. Verify the transmitter failure mode switch is in the desired position.
5. To verify the correct installation of Integral Transient Protection (option code T1) on the 644 device, confirm the following steps have been completed:
   a. Ensure the transient protector unit is firmly connected to the transmitter puck assembly.
   b. Ensure the transient protector power leads are adequately secured under the transmitter power terminal screws.
   c. Verify the transient protector's ground wire is secured to the internal ground screw found within the universal head.

Note
The transient protector requires the use of an enclosure of at least 3.5 in (89 mm) in diameter.

6. Pull the sensor wiring leads through the universal head and transmitter center hole. Mount the transmitter in the universal head by threading the transmitter mounting screws into the universal head mounting holes.
7. Mount the transmitter-sensor assembly into the thermowell, or remote mount if desired. Seal adapter threads with silicone tape.
8. Pull the field wiring leads through the conduit into the universal head. Attach the sensor and power leads to the transmitter. Avoid contact with other terminals.
9. Install and tighten the universal head cover. Enclosure covers must be fully engaged to meet explosion-proof requirements.

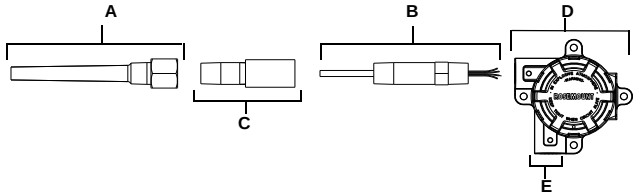

A = Threaded Thermowell

B = Threaded Style Sensor

C = Standard Extension

D = Universal Head (transmitter inside)

E = Conduit Entry

Step 4: Wire And Apply Power

Wire the sensor to the Transmitter

- The Wiring diagram is located on the device's top label below the terminal screws

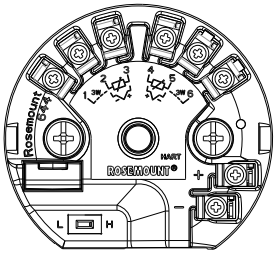

Figure 5. 644 Single and Dual Input Wiring Diagrams

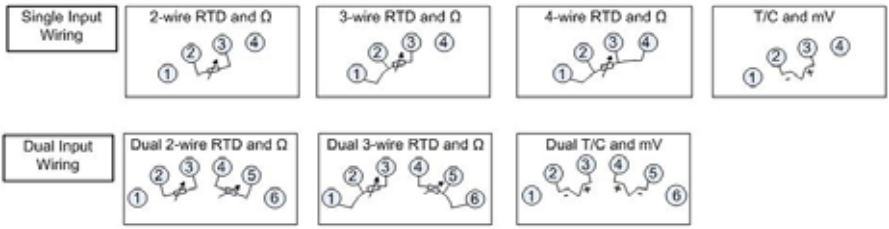

*The transmitter must be configured for at least a 3-wire RTD in order to recognize an RTD with a compensation loop.

** Rosemount Inc. provides a 4-wire sensors for all single element RTDs. Use these RTDs in 3-wire configurations by leaving the unneeded leads disconnected and insulated with electrical tape.

Power the transmitter

1. An external power supply is required to operate the transmitter.
2. Remove the housing cover (if applicable).
3. Connect the positive power lead to the "+" terminal. Connect the negative power lead to the "–" terminal.
   - If a transient protector is being used, the power leads will now be connected to the top of the transient protector unit. See the transient label for indication of "+" and "-" terminal connections.
4. Tighten the terminal screws. When tightening the sensor and power wires, the max torque is 6 in.-lbs (0.7 N-m).
5. Reattach and tighten the cover (if applicable).
6. Apply power (12 – 42 Vdc).

Load limitation

The power required across the transmitter power terminals is 12 to 42.4 Vdc (the power terminals are rated to 42.4 Vdc). To prevent damaging the transmitter, do not allow terminal voltage to drop below 12.0 Vdc when changing the configuration parameters.

Ground the transmitter

To ensure proper grounding, it is important that the instrument cable shield be:

- trimmed close and insulated from touching the transmitter housing
- connected to the next shield if cable is routed through a junction box
- connected to a good earth ground at the power supply end

Note
Shielded twisted pair cable should be used for best results. Use 24 AWG or larger wire and do not exceed 5,000 feet (1500 meters).

Ungrounded thermocouple, mV, and RTD/Ohm inputs

Each process installation has different requirements for grounding. Use the grounding options recommended by the facility for the specific sensor type, or begin with grounding Option 1: (the most common).

Option 1:

1. Connect sensor wiring shield to the transmitter housing.
2. Ensure the sensor shield is electrically isolated from surrounding fixtures that may be grounded.
3. Ground signal wiring shield at the power supply end.

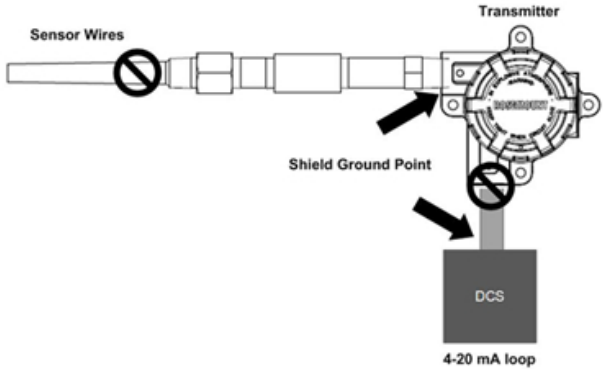

Option 2:

1. Connect signal wiring shield to the sensor wiring shield.
2. Ensure the two shields are tied together and electrically isolated from the transmitter housing.
3. Ground shield at the power supply end only.
4. Ensure that the sensor shield is electrically isolated from the surrounding grounded fixtures.

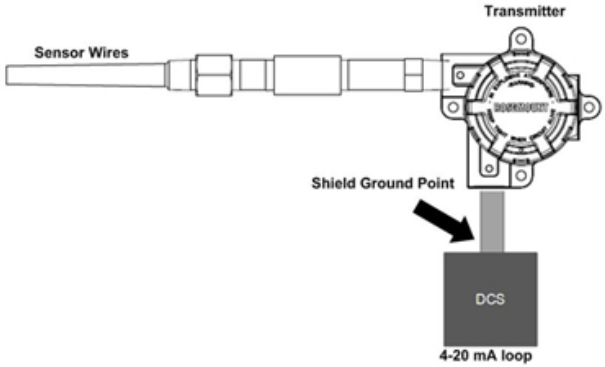

Connect shields together, electrically isolated from the transmitter.

Option 3:

1. Ground sensor wiring shield at the sensor, if possible.
2. Insure that the sensor wiring and signal wiring shields are electrically isolated from the transmitter housing.
3. Do not connect the signal wiring shield to the sensor wiring shield.
4. Ground signal wiring shield at the power supply end.

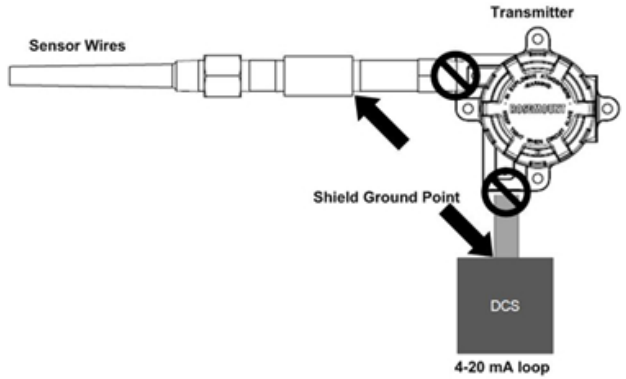

Grounded thermocouple inputs

Option 1:

1. Ground sensor wiring shield at the sensor.
2. Ensure that the sensor wiring and signal wiring shields are electrically isolated from the transmitter housing.
3. Do not connect the signal wiring shield to the sensor wiring shield.
4. Ground signal wiring shield at the power supply end.

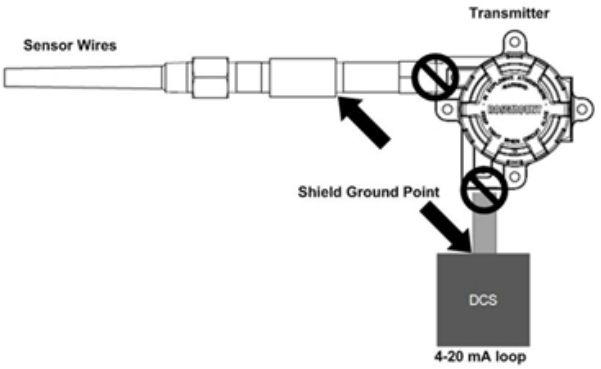

Step 5: Perform a loop test

The Loop Test command verifies transmitter output, loop integrity, and operation of any recorders or similar devices installed in the loop.

Performing a loop test using a Field Communicator

Initiate a loop test:

1. Connect an external ampere meter in series with the transmitter loop (so the power to the transmitter goes through the meter at some point in the loop).
2. From the home screen, enter the fast key sequence

Device Dashboard Fast Keys	3, 5, 1

3. In the test loop, check that the transmitter's actual mA output and the HART mA reading are the same value. If the readings do not match, either the transmitter requires an output trim or the meter is malfunctioning. After completing the test, the display returns to the loop test screen and allows the user to choose another output value. To end the Loop Test, select End and Enter.

Performing a loop test using AMS Device Manager

Right click on the device and select **Service Tools**.

1. In the left navigation pane choose **Simulate**.
2. On the Simulate Tab find the **Perform Loop Test** button in the **Analog Output Verification** group box.
3. Follow the guided instructions and click **Apply** when complete.

Performing a loop test using the Local Operator Interface

Please reference the figure below to find the path to the Loop Test in the LOI menu.

Figure 6. Configuring the Tag with LOI

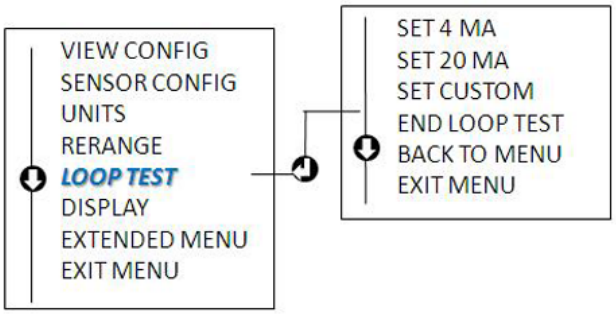

Safety Instrumented Systems

For Safety Certified installations, please refer to the Rosemount 644 reference manual (document number 00809-0200-4728). The manual is available electronically on www.rosemount.com or by contacting an Emerson Process Management representative.

Product Certifications

European Union Directive Information

The EC declaration of conformity for all applicable European directives for this product can be found on page 25. The latest revision of the Declaration is available at www.emersonprocess.com.

Ordinary Location Certification from FM Approvals

As standard, the transmitter has been examined and tested to determine that the design meets basic electrical, mechanical, and fire protection requirements by FM Approvals, a nationally recognized testing laboratory (NRTL) as accredited by the Federal Occupational Safety and Health Administration (OSHA).

Hazardous Locations Certifications

North American Certifications

FM Approvals

I5 Intrinsically Safe and Non-Incendive
Certificate No: 3044581
Applicable Standards: FM 3600:2011, FM 3610:2010, FM 3611:2004, FM 3810:2005, ANSI/NEMA 250:1991, ANSI/IEC 60529:2004, ANSI/ISA 60079-0:2009, ANSI/ISA 60079-11:2009

Markings (without enclosure):
INT. SAFE CL I, GP ABCD, T4
IS CL I Zone 0, AEX ia IIC; T4 Ga
NI CL I, DIV.2, GP ABCD
INSTALL PER DRAWINGS 00644-2071

Markings (with enclosure):
IS CL I,II,III, GP ABCDEFG T4
IS CL I Zone 0, AEX ia IIC; T4
NI CL I, DIV.2, GP ABCD
INSTALL PER DRAWINGS 00644-2071
ENCLOSURE TYPE 4X

Special Conditions for Safe Use (X)

- The Model 644 Temperature Transmitter shall be installed in a final enclosure meeting type of protection IP20 and meeting the requirements of ANSI/ISA 61010-1 and ANSI/ISA 60079-0
- The Model 644 optional enclosures may contain aluminum and are considered a potential risk of ignition by impact or friction. Care must be taken into account during installation and use to prevent impact and friction.

E5 Explosion-Proof and Dust Ignition Proof
Certificate No: 3006278
Applicable Standards: FM 3600:2011, FM 3611:2004, FM 3615:2006, FM 3810:2005, ANSI/NEMA 250:2005, ANSI/IEC 60529:2004

Markings:EXPLOSIONPROOF FOR CL. I, DIV. 1, GP BCD
DUST-IGNITIONPROOF FOR CL. II & III, DIV. 1, GP EFG
NON-INCENDIVE FOR CL. I, DIV 2, GP ABCD
WHEN INSTALLED PER ROSEMOUNT DRAWING 00644-1049
CONDUIT SEAL REQUIRED WITHIN 18 INCHES OF THE ENCLOSURE AT AMBIENT TEMPERATURES BELOW -40 °C;
ENCLOSURE TYPE 4X, IP66

CSA International

I6 Intrinsically Safe
Certificate No.: 1091070
Applicable Standards: CSA Std. C22.2 No. 142 – M1987, CSA Std. C22.2 No. 157 – 92, ANSI/ISA 12.27.02-2003

Markings (without enclosure):
Ex ia
CLASS I (GRPS A, B, C, D) CLASS I, ZONE 0, IIC
SUITABLE FOR CLASS I DIV 2, GROUPS A, B, C, D
INSTALL PER DRAWING 00644-2072.

Markings (with enclosure):
Ex ia
CLASS I, GRPS A,B,C,D, T4/T6, CLASS I, ZONE 0, IIC
WHEN INSTALL PER DRAWING 00644-1064 or 0644-2072
SUITABLE CLASS I DIV 2, WITH NON-INCENDIVE OUTPUT WHEN INSTALL PER DRAWING 00644-2072
ENCLOSURE TYPE 4X

K6 Explosion-Proof, Dust Ignition Proof, Intrinsically Safe and Suitable for Class I Division 2
Certificate No.: 1091070
Applicable Standards: CSA Std. C22.2 No. 142 – M1987, CSA Std. C22.2 No. 30 – M1986, CSA Std. C22.2 No. 213 – M1987, ANSI/ISA 12.27.02-2003

Markings:CL I, DIV. 1, GRPS. B,C,D;
DUST-IGNITION PROOF, CL II, GRPS E,F, CL. III;
SUITABLE FOR CL I, DIV. 2, GROUPS A,B,C,D
INSTALL PER DRAWING 00644-1059
ENCLOSURE TYPE 4X; CONDUIT SEAL NOT REQUIRED,

Ex ia
INTRINSICALLY SAFE, CLASS I, GROUPS A, B, C, D, T4/T5/T6CLASS I, ZONE 0, IIC.
INSTALL PER DRAWING 00644-1064 or 00644-2072.
SUITABLE FOR CLASS I DIV 2, GROUPS A, B, C, D
INSTALL PER DRAWING 00644-2072.

European Certifications

I1 ATEX Intrinsic Safety
Certificate No.: Baseefa 12ATEX0101X
Applicable Standards: IEC 60079-0: 2011, EN60079-11: 2012
Markings:  II 1 G, Ex ia IIC T6...T4 Ga;

Special Conditions for Safe Use (X)

The apparatus must be installed in an enclosure which affords a degree of protection of at least IP20.

Non-metallic enclosures must have a surface resistance of less than 1GΩ. Light alloy or zirconium enclosures must be protected from impact and friction when installed.

Table 4. Input Parameters

Loop	
U_i = 30 V	
I_i = 150 mA	Ta < 80° C
= 170 mA	Ta < 70° C
= 190 mA	Ta < 60° C
Pi = 0.67 W	T6 (-60 °C ≤ Ta ≤ 40 °C), T5 (-60 °C ≤ Ta ≤ 50 °C)
= 0.8 W	T5 (-60 °C ≤ Ta ≤ 40 °C), T4 (-60 °C ≤ Ta ≤ 80 °C)
Ci = 3.3 nF	
Li = 0	
Sensor	
U_o = 13.6 V	
I_o = 80 mA	
P_o = 80 mW	
C_i = 0.44 nF	C_o = 0.816 µF Group IIC
	C_o= 5.196 µF Group IIB
	C_o = 18.596 µF Group IIA
L_i = 0	L_o = 5.79 mH Group IIC
	L_o = 23.4 mH Group IIB
	L_o= 48.06 mH Group IIA

N1 ATEX Type n (with enclosure)
Certification No.: BAS 00ATEX3145
Applicable Standards: EN 60079-0: 2006, EN60079-15: 2005
Markings: ⟨Ex⟩ II 3 G, Ex nL IIC T5 Gc (-40 °C ≤ Ta ≤ 70 °C)

NC ATEX Type n (without enclosure)
Certificate No.: Baseefa12ATEX0102U
Applicable Standards: IEC 60079-0: 2011, EN60079-15: 2005
Markings: ⟨Ex⟩ II 3 G, Ex nA IIC T6...T5 Gc
V_{max} = 45 volts max

Temperature limitations – T6 (-60 °C ≤ Ta ≤ 40 °C), T5 (-60 °C ≤ Ta ≤ 85 °C)

Special Conditions for safe use (x):

The component must be installed in a suitably certified enclosure such that it is afforded a degree of protection of at least IP54 in accordance with IEC 60529, IEC 60079-0 & EN 60079-15.

E1 ATEX Flameproof
Certificate No.:FM12ATEX0065X
Applicable Standards: EN60079-0:2009, EN60079-1:2007
Markings: ⟨Ex⟩ II 2 G, Ex d IIC T6...T1 Gb
T6 (–50 °C ≤ Ta ≤ 40 °C)
T5...T1 (–50 °C ≤ Ta ≤ 60 °C)

ND ATEX Dust
Certificate No.:FM12ATEX0065X
Applicable Standards: EN60079-0:2009, EN60079-31:2009
Markings: ⟨Ex⟩ II 2 D, Ex tb IIIC T95°C (–40 °C ≤ Ta ≤ 70 °C) Db

Special Conditions for Safe Use (X):

1. See certificate for ambient temperature limits
2. The non-metallic label may store an electrostatic charge and become a source of ignition in Group III environments.
3. Guard the LCD cover against impact energies greater than 4 joules.
4. Consult the manufacturer if dimensional information on the flameproof joints is necessary.

Table 5. Process Temperature Limits when assembled to a sensor:

Transmitter with LCD Cover	Process Temperature [° C]			
	Gas			Dust
	T6	T5	T4...T1	T130 ° C
No Extension	55	70	95	95
3" Extension	55	70	100	100
6" Extension	60	70	100	100
9" Extension	65	75	110	110

Transmitter without LCD Cover	Process Temperature [° C]						
	Gas						Dust
	T6	T5	T4	T3	T2	T1	T130 ° C
No Extension	55	70	100	170	280	440	100
3" Extension	55	70	110	190	300	450	110
6" Extension	60	70	120	200	300	450	110
9" Extension	65	75	130	200	300	450	120

IECEx Certifications

I7 IECEX Intrinsic Safety
Certificate No.: IECEx BAS 12.0069X
Applicable Standards: IEC 60079-0: 2011, IEC 60079-11: 2007
Markings: Ex ia IIC T6...T4 Ga

Input Parameters

Loop	
U_i = 30 V	
I_i = 150 mA	Ta < 80° C
= 170 mA	Ta < 70° C
= 190 mA	Ta < 60° C
Pi = 0.67 W	T6 (-60 °C ≤ Ta ≤ 40 °C), T5 (-60 °C ≤ Ta ≤ 50 °C)
= 0.8 W	T5 (-60 °C ≤ Ta ≤ 40 °C), T4 (-60 °C ≤ Ta ≤ 80 °C)
Ci = 3.3 nF	
Li = 0	

Sensor	
U_o = 13.6 V	
I_o = 80 mA	
P_o = 80 mW	
C_i = 0.44 nF	C_o = 0.816 µF Group IIC
	C_o = 5.196 µF Group IIB
	C_o = 18.596 µF Group IIA
L_i = 0	L_o = 5.79 mH Group IIC
	L_o = 23.4 mH Group IIB
	L_o = 48.06 mH Group IIA

Special Conditions for Safe Use (X)

The apparatus must be installed in an enclosure which affords a degree of protection of at least IP20

Non-metallic enclosures must have a surface resistance of less than 1Gohm

Light alloy or zirconium enclosures must be protected from impact and friction when installed

N7 IECEX Type n (with enclosure)
Certification No.: IECEx BAS 07.0055
Applicable Standards: IEC 60079-0: 2004, EN60079-15: 2005
Markings: Ex nA nL IIC T5 Gc (-40 °C ≤ Ta ≤ 70 °C)

NG IECEX Type n (without enclosure)
Certificate No.: IECEx BAS 12.0070U
Applicable Standards: IEC 60079-0: 2011, IEC 60079-15: 2010
Markings: Ex nA IIC T6...T5 Gc
Vmax = 45 volts max

Temperature limitations – T6 (-60 °C ≤ Ta ≤ 40 °C), T5 (-60 °C ≤ Ta ≤ 85 °C)

Schedule of Limitations:

The component must be installed in a suitable certified enclosure such that it is afforded a degree of protection of at least IP54 in accordance with IEC 60529, IEC 600790, and IEC 60079-15.

E7 IECEx Flameproof
Certificate No.:IECEx FMG12.0022X
Applicable Standards: IEC60079-0:2011, IEC60079-1:2007
Markings: Ex d IIC T6...T1 Gb
T6 (–50 °C ≤ Ta ≤ 40 °C)
T5...T1 (–50 °C ≤ Ta ≤ 60 °C)

NK IECEx Dust
Certificate No.:IECEx FMG12.0022X
Applicable Standards: IEC60079-0:2011, IEC60079-31:2008
Markings: Ex tb IIIC T130°C (–40 °C ≤ Ta ≤ 70 °C) Db

Special Conditions for Safe Use (X):

1. See certificate for ambient temperature limits
2. The non-metallic label may store an electrostatic charge and become a source of ignition in Group III environments.
3. Guard the LCD cover against impact energies greater than 4 joules.
4. Consult the manufacturer if dimensional information on the flameproof joints is necessary.

Table 6. Process Temperature Limits when assembled to a sensor:

Transmitter with LCD Cover	Process Temperature [° C]			
	Gas			Dust
	T6	T5	T4...T1	T130 ° C
No Extension	55	70	95	95
3" Extension	55	70	100	100
6" Extension	60	70	100	100
9" Extension	65	75	110	110

Transmitter without LCD Cover	Process Temperature [° C]						
	Gas						Dust
	T6	T5	T4	T3	T2	T1	T130 ° C
No Extension	55	70	100	170	280	440	100
3" Extension	55	70	110	190	300	450	110
6" Extension	60	70	120	200	300	450	110
9" Extension	65	75	130	200	300	450	120

Combinations of Certifications

Stainless steel certification tag is provided when optional approval is specified. Once a device labeled with multiple approval types is installed, it should not be reinstalled using any other approval types. Permanently mark the approval label to distinguish it from unused approval types.

K1 Combination of E1, I1, N1, and ND

K5 Combination of E5 and I5

K6 Combination of E6 and I6

K7 Combination of E7, I7, NK, and N7

KA Combination of E1, I1, E6, and I6

KB Combination of E5, I5, I6, and E6

KC Combination of E5, E1, I5, and I1

KD Combination of E5, I5, E6, I6, E1, and I1

Brazilian Certifications

E2 INMETRO Flameproof
Certificate No: CEPEL 02.0095X
Ex d IIC T6 Gb (-40 °C ≤ Ta ≤ +65 °C)
Enclosure Rating: IP66W

Special Conditions for Safe Use (X):

1. See certificate for ambient temperature limits

2. The non-metallic label may store an electrostatic charge and become a source of ignition in Group III environments.
3. Guard the LCD cover against impact energies greater than 4 joules.
4. Consult the manufacturer if dimensional information on the flameproof joints is necessary.

I2 INMETRO Intrinsic Safety
Certificate No: CEPEL 02.0096X
Ex ia IIC T* Ga

Special Conditions for Safe Use (X):

1. See certificate for ambient temperature limits
2. The non-metallic label may store an electrostatic charge and become a source of ignition in Group III environments.
3. Guard the LCD cover against impact energies greater than 4 joules.
4. Consult the manufacturer if dimensional information on the flameproof joints is necessary.

Other Certifications

Shipboard

SBS American Bureau of Shipping (ABS)
Certificate No.: 00-HS145383/1-PDA
Applicable Standards: ABS Rules:2008 Steel Vessels Rules 1-1-4/7.7, 4-8-3/1.7
Intended Service: Measurement of Pressure, Flow and Level for Liquid, Gas and Vapor Applications on ABS Classed Vessels, Marine and Offshore Installations

Figure 7. Rosemount 644 EC Declaration of Conformity

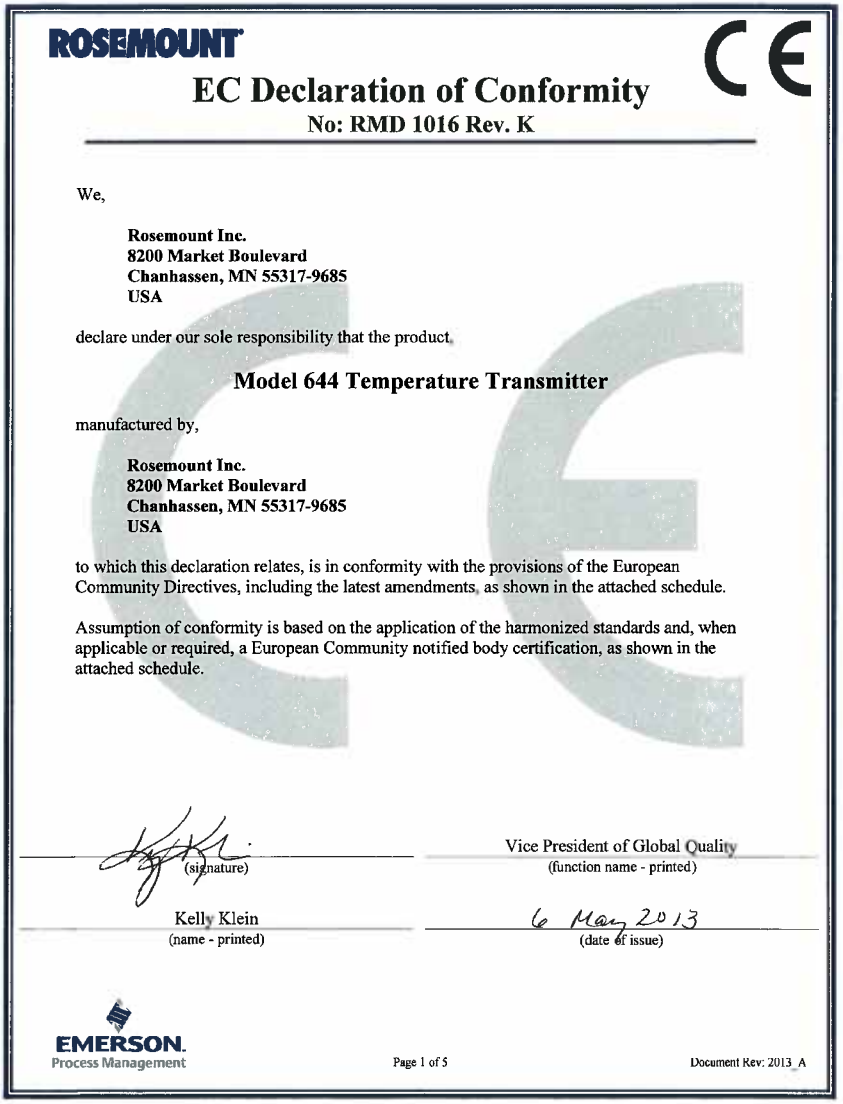

ROSEMOUNT

EC Declaration of Conformity

No: RMD 1016 Rev. K

We,

Rosemount Inc.
8200 Market Boulevard
Chanhassen, MN 55317-9685
USA

declare under our sole responsibility that the product

Model 644 Temperature Transmitter

manufactured by,

Rosemount Inc.
8200 Market Boulevard
Chanhassen, MN 55317-9685
USA

to which this declaration relates, is in conformity with the provisions of the European Community Directives, including the latest amendments, as shown in the attached schedule.

Assumption of conformity is based on the application of the harmonized standards and, when applicable or required, a European Community notified body certification, as shown in the attached schedule.

(signature)

Vice President of Global Quality
(function name - printed)

Kelly Klein
(name - printed)

6 May 2013
(date of issue)

EMERSON. Process Management

Page 1 of 5

Document Rev: 2013_A

ROSEMOUNT

EC Declaration of Conformity

No: RMD 1016 Rev. K

EMC Directive (2004/108/EC)

All Models

Harmonized Standards: EN61326-1:2006, EN61326-2-3: 2006

ATEX Directive (94/9/EC)

Model 644 Enhanced DIN A Head Mount Temperature Transmitter (Analog/HART Output)

Baseefa12ATEX0101X – Intrinsic Safety Certificate

Equipment Group II, Category 1 G (Ex ia IIC T6…T4 Ga)
Harmonized Standards:
EN60079-11:2012
Other Standards:
IEC60079-0:2011

Baseefa12ATEX0102U – Type n Component Certificate

Equipment Group II, Category 3 G (Ex nA IIC T6…T5 Gc)
Harmonized Standards:
EN60079-15:2010
Other Standards:
IEC60079-0:2011

Model 644 Legacy DIN A Head Mount Temperature Transmitter (Analog/HART Output)

Baseefa00ATEX1033X – Intrinsic Safety Certificate

Equipment Group II, Category 1 G (Ex ia IIC)
Harmonized Standards:
EN60079-11: 2007
Other Standards:
EN60079-0:2006 (A review against EN60079-0:2009, which is harmonized, shows no significant changes relevant to this equipment so EN60079-0:2006 continues to represent "State of the Art")

EMERSON. Process Management

Page 2 of 5

Document Rev. 2013_A

ROSEMOUNT

EC Declaration of Conformity

No: RMD 1016 Rev. K

BAS00ATEX3145 – Type n Certificate
Equipment Group II, Category 3 G (Ex nL IIC)
Harmonized Standards:
EN60079-15:2005
Other Standards:
EN60079-0: 2006 (A review against EN60079-0:2009, which is harmonized, shows no significant changes relevant to this equipment so EN60079-0:2006 continues to represent "State of the Art")

BAS99ATEX3084U – Type n Component Certificate
Equipment Group II, Category 3 G (Ex nL IIC)
Harmonized Standards:
EN60079-15:2005
Other Standards:
EN60079-0:2006 (A review against EN60079-0:2009, which is harmonized, shows no significant changes relevant to this equipment so EN60079-0:2006 continues to represent "State of the Art")

Model 644 DIN A Head Mount Temperature Transmitter (Fieldbus Output)

Baseefa03ATEX0499X – Intrinsic Safety Certificate
Equipment Group II, Category 1 G (Ex ia IIC)
Harmonized Standards:
EN60079-11:2007
Other Standards:
EN60079-0:2006 (A review against EN60079-0:2009, which is harmonized, shows no significant changes relevant to this equipment so EN60079-0:2006 continues to represent "State of the Art")

BAS99ATEX3084U – Type n Component Certificate
Equipment Group II, Category 3 G (Ex nL IIC)
Harmonized Standards:
EN60079-15: 2005
Other Standards:
EN60079-0:2006 (A review against EN60079-0:2009, which is harmonized, shows no significant changes relevant to this equipment so EN60079-0:2006 continues to represent "State of the Art")

EMERSON. Process Management

Page 3 of 5

Document Rev 2013_A

ROSEMOUNT

EC Declaration of Conformity

No: RMD 1016 Rev. K

Model 644 DIN A Head Mount Temperature Transmitter (all output protocols)

FMG12ATEX0065X – Flameproof Certificate
Equipment Group II, Category 2 G (Ex d IIC T6 Gb)
Harmonized Standards:
EN60079-0:2012, EN60079-1:2007

FMG12ATEX0065X – Dust Certificate
Equipment Group II, Category 2 D (Ex tb IIIC T130°C Db)
Harmonized Standards:
EN60079-0:2012, EN60079-31:2009

Models 644R Rail Mount Temperature Transmitters (Hart)

Baseefa00ATEX1033X – Intrinsic Safety Certificate
Equipment Group II, Category 1 G (Ex ia IIC)
Harmonized Standards:
EN60079-11:2007
Other Standards:
EN60079-0:2006 (A review against EN60079-0:2009, which is harmonized, shows no significant changes relevant to this equipment so EN60079-0:2006 continues to represent "State of the Art")

BAS99ATEX3084U – Type n Component Certificate
Equipment Group II, Category 3 G (Ex nL IIC)
Harmonized Standards:
EN60079-15:2005
Other Standards:
EN60079-0:2006 (A review against EN60079-0:2009, which is harmonized, shows no significant changes relevant to this equipment so EN60079-0:2006 continues to represent "State of the Art")

EMERSON.
Process Management

Page 4 of 5

Document Rev: 2013_A

ROSEMOUNT

EC Declaration of Conformity

No: RMD 1016 Rev. K

ATEX Notified Bodies for EC Type Examination Certificates

FM Approvals Ltd. [Notified Body Number: 1725]
1 Windsor Dials
Windsor, Berkshire, SL4 1RS
United Kingdom

Baseefa Limited [Notified Body Number: 1180]
Rockhead Business Park Staden Lane
SK17 9RZ Buxton
United Kingdom

ATEX Notified Body for Quality Assurance

Baseefa Limited [Notified Body Number: 1180]
Rockhead Business Park Staden Lane
SK17 9RZ Buxton
United Kingdom

EMERSON.
Process Management

Document Rev. 2013_A

Quick Start Guide
00825-0200-4728, Rev BA
June 2013

Rosemount Inc.
8200 Market Boulevard
Chanhassen, MN USA 55317
T (US) (800) 999-9307
T (Intnl) (952) 906-8888
F (952) 906-8889

Emerson Process Management Asia Pacific Private Limited
1 Pandan Crescent
Singapore 128461
T (65) 6777 8211
F (65) 6777 0947/65 6777 0743

Emerson Process Management GmbH & Co. OHG
Argelsrieder Feld 3
82234 Wessling Germany
T 49 (8153) 9390, F49 (8153) 939172

Beijing Rosemount Far East Instrument Co., Limited
No. 6 North Street, Hepingli,
Dong Cheng District
Beijing 100013, China
T (86) (10) 6428 2233
F (86) (10) 6422 8586

Emerson Process Management (India) Private Ltd.
Delphi Building, B Wing, 6th Floor
Hiranandani Gardens, Powai
Mumbai 400076, India
T (91) 22 6662-0566
F (91) 22 6662-0500

Emerson Process Management, Brazil
Av. Hollingsworth, 325 - Iporanga
Sorocaba, SP – 18087-000, Brazil
T (55) 15 3238-3788
F (55) 15 3228-3300

Emerson Process Management, Russia
29 Komsomolsky prospekt
Chelyabinsk, 454138
Russia
T (7) 351 798 8510
F (7) 351 741 8432

Emerson Process Management, Dubai
Emerson FZE
P.O. Box 17033,
Jebel Ali Free Zone - South 2
Dubai, U.A.E.
T (971) 4 8118100
F (971) 4 8865465

Emerson Process Management Latin America
1300 Concord Terrace, Suite 400
Sunrise Florida 33323 USA
Tel + 1 954 846 5030

© 2013 Rosemount Inc. All rights reserved. All marks property of owner.
The Emerson logo is a trade mark and service mark of Emerson Electric Co
Rosemount and the Rosemount logotype are registered trademarks of Rosemount Inc.

ROSEMOUNT

EMERSON.
Process Management

Reference Manual
00809-0200-4728, Rev PA
November 2013

Rosemount 644 Temperature Transmitter with HART® Protocol



ROSEMOUNT

EMERSON.
Process Management

Rosemount 644 Temperature Transmitter

Rosemount 644 Hardware Revision	30	1	1
Device Revision	7	8	9
HART® Revision	5	5	7

⚠ CAUTION

Read this manual before working with the product. For personal and system safety, and for optimum product performance, make sure to thoroughly understand the contents before installing, using, or maintaining this product.

The United States has two toll-free assistance numbers and one international number.

Customer Central
1-800-999-9307 (7:00 a.m. to 7:00 p.m. CST)

National Response Center
1-800-654-7768 (24 hours a day)
Equipment service needs

International
1-(952)-906-8888

⚠ CAUTION

The products described in this document are NOT designed for nuclear-qualified applications.

Using non-nuclear qualified products in applications that require nuclear-qualified hardware or products may cause inaccurate readings.

For information on Rosemount nuclear-qualified products, contact a Emerson Process Management Sales Representative.

Contents

Section 1: Introduction

1.1 Safety Messages 1
1.2 Overview 2
1.2.1 Manual 2
1.2.2 Transmitter overview 3
1.3 Considerations 3
1.3.1 General 3
1.3.2 Commissioning 4
1.3.3 Mechanical 4
1.3.4 Electrical 4
1.3.5 Environmental 4
1.4 Return of Materials 5
1.5 Transmitter Security 6
1.5.1 Available Security Options 6

Section 2: Configuration

2.1 Overview 7
2.2 Safety Messages 7
2.3 System readiness 9
2.3.1 Confirm correct device driver 9
2.3.2 Surges/Transients 9
2.4 Configuration Methods 10
2.4.1 Configuring on the bench 10
2.4.2 Choosing a configuration tool 11
2.4.3 Setting the Loop to Manual 13
2.4.4 Failure Mode 14
2.4.5 HART Software Lock 14
2.5 Verify configuration 14
2.5.1 Verify and review configuration with Field Communicator 14
2.5.2 Verify and review configuration with AMS Device Manager 15
2.5.3 Verify and review configuration with Local Operator Interface 15
2.5.4 Checking transmitter output 15
2.6 Basic Configuration of the transmitter 16
2.6.1 Mapping the HART® Variables 17
2.6.2 Configuring the Sensor(s) 18
2.6.3 Setting Output Units 20

2.7 Configure Dual Sensor Options 22
2.7.1 Differential Temperature Configuration 22
2.7.2 Average Temperature Configuration 23
2.7.3 Hot Backup Configuration. 25
2.7.4 Sensor Drift Alert Configuration. 27
2.8 Configure Device Outputs 28
2.8.1 Rerange the transmitter 28
2.8.2 Damping. 29
2.8.3 Configure Alarm and Saturation Levels. 31
2.8.4 Configuring the LCD Display. 33
2.9 Inputting device information. 35
2.9.1 Tag,date, descriptor and message 35
2.10Configure measurement filtering. 37
2.10.150/60 Hz filter 37
2.10.2Resetting the device 37
2.10.3Intermittent sensor detection 38
2.10.4Open sensor holdoff. 39
2.11Diagnostics and service 39
2.11.1Performing a loop test. 39
2.11.2Simulate digital signal (Digital Loop Test) 40
2.11.3Thermocouple Degradation Diagnostic. 41
2.11.4Minimum/Maximum tracking diagnostic 43
2.12Establishing multidrop communication 44
2.12.1Changing a transmitter address 45
2.13Using the transmitter with the HART Tri-Loop. 45
2.13.1Set the transmitter to Burst Mode. 45
2.13.2Set Process Variable Output Order 46

Section 3: Hardware installation

3.1 Overview 49
3.2 Safety Messages. 49
3.3 Considerations 51
3.3.1 Installation considerations 51
3.3.2 Environmental considerations 51
3.4 Installation procedures 52
3.4.1 Set the Alarm switch 52
3.4.2 Mount the transmitter. 54

3.4.3 Install the device 55
3.4.4 Multichannel installations 59
3.4.5 LCD Display Installation 59

Section 4: Electrical Installation

4.1 Overview 61
4.2 Safety Messages 61
4.3 Wiring and powering the transmitter 62
4.3.1 Sensor connections 62
4.3.2 Power the transmitter 64
4.3.3 Ground the transmitter 66
4.3.4 Wiring with a Rosemount 333 HART Tri-Loop (HART / 4–20 mA only) . . . 69

Section 5: Operation and maintenance

5.1 Overview 71
5.2 Safety messages 71
5.3 Calibration overview 72
5.3.1 Trimming 72
5.4 Sensor input trim 73
5.4.1 Recall Factory Trim—Sensor trim 75
5.4.2 Active Calibrator and EMF Compensation 75
5.5 Trim the analog output 76
5.5.1 Analog output trim or Scaled Analog Output Trim 76
5.5.2 Analog output trim 76
5.5.3 Performing a scaled output trim 77
5.6 Transmitter-Sensor Matching 78
5.7 Switching HART Revision 80
5.7.1 Switching HART revision using the Generic Menu 80
5.7.2 Switching HART revision using a Field Communicator 80
5.7.3 Switching HART revision with AMS Device Manager 80
5.7.4 Switching HART revision with Local Operator Interface 80

Section 6: Troubleshooting

6.1 Overview 83
6.2 Safety messages 83
6.3 Troubleshooting the 4-20 mA/HART output 85
6.4 Diagnostic messages 86

6.4.1 Diagnostic messages: Failed 87
6.4.2 Diagnostic messages: Warning 89
6.4.3 Other LCD messages 90

Section 7: Safety Instrumented Systems (SIS) Certification

7.1 Safety Instrumented Systems (SIS) certification 93
7.2 644 safety certified identification 93
7.3 Installation 94
7.4 Commissioning 94
7.5 Configuration 94
7.5.1 Damping 95
7.6 Alarm and saturation levels 95
7.7 644 SIS operation and maintenance 96
7.7.1 Proof Test 96
7.7.2 Abbreviated proof test 96
7.7.3 Extended proof test 97
7.8 Specifications 98
7.8.1 Failure rate data 98
7.8.2 Failure values 98
7.8.3 Product life 99

Appendix A: Specifications and Reference Data

A.1 Specifications 101
A.1.1 Functional 101
A.1.2 Physical 102
A.1.3 Performance 104
A.2 4–20 mA / HART Specifications 107
A.3 Dimensional Drawings 114
A.4 Ordering Information 119
A.4.1 Configuration 127
A.4.2 Tagging 127
A.4.3 Considerations 128
A.5 Specifications and Reference Data for 644 HART Head Mount 130
A.5.1 Functional Specifications 130
A.5.2 Physical Specifications 131
A.5.3 Performance Specifications 133
A.5.4 4–20 mA / HART Specifications 135

Appendix B: Product Certifications

B.1 Approved manufacturing locations 137
B.2 European Directive Information 137
B.2.1 Ordinary Location Certification from FM Approvals 137
B.2.2 Hazardous Locations Certifications 137

Appendix C: Field Communicator Menu Trees and Fast Keys

C.1 Field Communicator menu trees 161
C.2 Field Communicator fast keys 167

Appendix D: Local Operator Interface (LOI)

D.1 Number entry 169
D.2 Text entry 170
D.2.1 Scrolling 170
D.3 Timeout 171
D.4 Saving and canceling 171
D.5 LOI menu tree 173
D.6 LOI menu tree – extended menu 174

Section 1 Introduction

Safety Messages . . . . . page 1
Overview . . . . . page 2
Considerations . . . . . page 3
Return of Materials . . . . . page 5

1.1 Safety Messages

Instructions and procedures in this section may require special precautions to ensure the safety of the personnel performing the operations. Information that potentially raises safety issues is indicated by a warning symbol (⚠). Please refer to the following safety messages before performing an operation preceded by this symbol.

Warnings

⚠ WARNING

Failure to follow these installation guidelines could result in death or serious injury.

- Make sure only qualified personnel perform the installation.

Explosions could result in death or serious injury.

- Do not remove the connection head cover in explosive atmospheres when the circuit is live.
- Before connecting HART in an explosive atmosphere, make sure the instruments in the loop are installed in accordance with intrinsically safe or non-intrinsic field wiring practices.
- Verify that the operating atmosphere of the transmitter is consistent with the appropriate hazardous locations certifications.
- All connection head covers must be fully engaged to meet explosion-proof requirements.

Process leaks could result in death or serious injury.

- Do not remove the thermowell while in operation.
- Install and tighten thermowells and sensors before applying pressure.

Electrical shock could cause death or serious injury.

- Use extreme caution when making contact with the leads and terminals.

1.2 Overview

1.2.1 Manual

This manual is designed to assist in the installation, operation, and maintenance of Rosemount 644 head mount and 644 rail mount transmitters with the HART protocol.

Section 2: Configuration

This section provides instruction on the commissioning and operating of the Rosemount 644 HART transmitter. The information explains how to configure software functions and many configuration parameters on an Asset Management System, a Field Communicator, and the Local Operator Interface display option.

Section 3: Hardware installation

This section contains mechanical installation instructions for the transmitter.

Section 4: Electrical Installation

This section contains electrical installation instructions and considerations for the transmitter.

Section 5: Operation and maintenance

This section contains common operation and maintenance techniques for the transmitter.

Section 6: Troubleshooting

This section provides troubleshooting techniques for the most common transmitter operating problems.

Section 7: Safety Instrumented Systems (SIS) Certification

This section provides identification, installation, configuration, operation and maintenance, and inspection information for Safety Instrumented Systems as it pertains to the Rosemount 644 Head mount Temperature Transmitter.

Appendix A: Specifications and Reference Data

This section supplies transmitter specifications and reference data as well as transmitter ordering information.

Appendix B: Product Certifications

This section contains the approved manufacturing locations, Hazardous Location Product Certification information, European Union Directive information and Installation Drawings.

Appendix C: Field Communicator Menu Trees and Fast Keys

This section contains Field Communicator menu trees and Field Communicator fast keys.

Appendix D: Local Operator Interface (LOI)

This section contains instructions for number entry, text entry, as well as the LOI menu tree and LOI extended menu tree.

1.2.2 Transmitter overview

The Rosemount 644 Head mount Temperature Transmitter supports the follow features:

- HART configuration with Selectable HART revision capability (Revisions 5 or 7)
- Accepts either 1 or 2 inputs from a wide variety of sensor types (2, 3, and 4-wire RTD, Thermocouple, mV and Ohm)
- A compact transmitter size with electronics completely encapsulated in protective silicone and enclosed in a plastic housing ensuring long-term transmitter reliability
- Optional Safety Certification Option (IEC 61508 SIL 2)
- Optional Enhanced accuracy and stability performance
- Optional LCD Display with extended temperature ratings of -40 °C to 85 °C
- Optional advanced LCD display with local operator interface (LOI) with extended temperature ratings of -40 °C to 80 °C
- Two housing materials (Aluminum and SST) and various housing style options that allow for mounting flexibility in a variety of environmental conditions
- Special dual-sensor features include Hot Backup®, Sensor Drift Alert, first good, differential and average temperature measurements, and four simultaneous measurement variable outputs in addition to the analog output signal
- Additional advanced features include: Thermocouple Degradation Diagnostic, which monitors thermocouple health, and process and transmitter Minimum/Maximum Temperature Tracking

The Rosemount 644 Rail mount Temperature Transmitter supports the following features:

- 4-20mA/HART protocol (Revision 5)
- Accepts 1 sensor input from a wide variety of sensor types (2, 3, and 4-wire RTD, Thermocouple, mV and Ohm)
- Completely encapsulated electronics to ensure long term transmitter reliabilty

Refer to the following literature for a full range of compatible connection heads, sensors, and thermowells provided by Emerson Process Management.

- Temperature Sensors and Assemblies Product Data Sheet, Volume 1 (document number 00813-0100-2654)
- Temperature Sensors and Assemblies Product Data Sheet, Volume 2 (document number 00813-0200-2654)

1.3 Considerations

1.3.1 General

Electrical temperature sensors such as RTDs and thermocouples produce low-level signals proportional to their sensed temperature. The 644 converts the low-level sensor signal to a standard 4–20 mA DC or digital HART signal that is relatively insensitive to lead length and electrical noise. This signal is then transmitted to the control room via two wires.

1.3.2 Commissioning

The transmitter can be commissioned before or after installation. It may be useful to commission it on the bench, before installation, to ensure proper operation and to become familiar with its functionality. Make sure the instruments in the loop are installed in accordance with intrinsically safe, or non-incendive field wiring practices.

1.3.3 Mechanical

Location

When choosing an installation location and position, take into account the need for access to the transmitter.

Special Mounting

Special mounting hardware is available for mounting a 644 head mount transmitter to a DIN rail or assembling a new 644 head mount to an existing threaded sensor connection head (former option code L1).

1.3.4 Electrical

Proper electrical installation is necessary to prevent errors due to sensor lead resistance and electrical noise. For best results, shielded cable should be used in electrically noisy environments.

Make wiring connections through the cable entry in the side of the housing. Be sure to provide adequate clearance for cover removal.

1.3.5 Environmental

The transmitter electronics module is permanently sealed within a plastic enclosure, resisting moisture and corrosive damage. Verify that the operating atmosphere of the transmitter is consistent with the appropriate hazardous locations certifications.

Temperature Effects

The transmitter will operate within specifications for ambient temperatures between –40 and 185 °F (–40 and 85 °C). Heat from the process is transferred from the thermowell to the transmitter housing. If the expected process temperature is near or beyond specification limits, consider the use of additional thermowell lagging, an extension nipple, or a remote mounting configuration to isolate the transmitter from the process.

Figure 1-1 provides an example of the relationship between transmitter housing temperature rise and extension length.

Figure 1-1. 644 head mount Transmitter Connection Head Temperature Rise vs. Extension Length

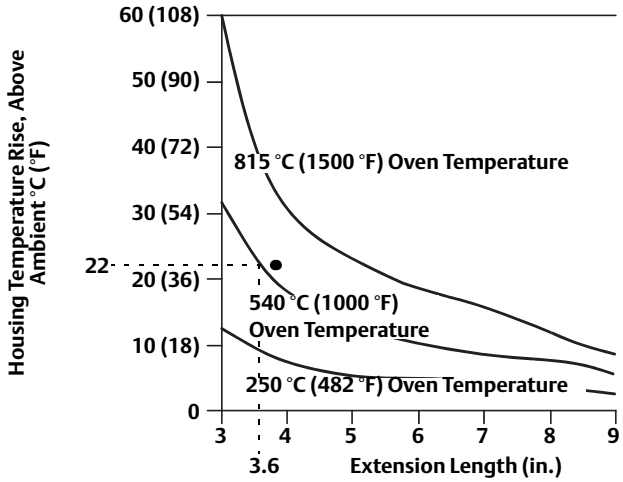

Example

The maximum permissible housing temperature rise (T) can be calculated by subtracting the maximum ambient temperature (A) from the transmitter's ambient temperature specification limit (S). For instance, if A = 40 °C.

$$T = S - A$$
$$T = 85\ °C - 40\ °C$$
$$T = 45\ °C$$

For a process temperature of 540 °C (1004 °F), an extension length of 3.6 inches (91.4 mm) yields a housing temperature rise (R) of 22 °C (72 °F), providing a safety margin of 23 °C (73 °F). A 6.0 inch (152.4 mm) extension length (R = 10 °C (50 °F)) offers a higher safety margin (35 °C (95 °F)) and reduces temperature-effect errors but would probably require extra transmitter support. Gauge the requirements for individual applications along this scale. If a thermowell with lagging is used, the extension length may be reduced by the length of the lagging.

1.4 Return of Materials

To expedite the return process in North America, call the Emerson Process Management National Response Center toll-free at 800-654-7768. This center, available 24 hours a day, will assist you with any needed information or materials.

⚠ The center will ask for the following information:

- Product model
- Serial numbers
- The last process material to which the product was exposed

The center will provide

- A Return Material Authorization (RMA) number
- Instructions and procedures that are necessary to return goods that were exposed to hazardous substances

For other locations, please contact an Emerson Process Management sales representative.

Note
If a hazardous substance is identified, a Material Safety Data Sheet (MSDS), required by law to be available to people exposed to specific hazardous substances, must be included with the returned materials.

1.5 Transmitter Security

1.5.1 Available Security Options

There are three security methods to utilize with the Rosemount 644 transmitter.

- Software Security Switch (Write Protect)
- HART Lock
- LOI Password

The **Write Protect** feature allows you to protect the transmitter data from accidental or unwarranted configuration changes. To enable the write protect feature, perform the following procedures.

Configuring Write Protect, HART Lock and LOI Password with a Field Communicator

From the *HOME* screen, enter the fast key sequence

Device Dashboard Fast Keys-Write Protect	2, 2, 9, 1
Device Dashboard Fast Keys-HART Lock	2, 2, 9, 2
Device Dashboard Fast Keys- LOI Password	2, 2, 9, 3

Configuring Write Protect, HART Lock and LOI Password with AMS Device Manager

Right click on the device and select the **Configure** menu.

1. In the left navigation pane choose **Manual Setup** then chose the **Security tab**.
2. All three parameters can be configured from this screen.
3. Click **Apply** when complete.

Section 2 Configuration

Overview . . . . . page 7
System readiness . . . . . page 9
Configuration Methods . . . . . page 10
Basic Configuration of the transmitter . . . . . page 16
Configure Dual Sensor Options . . . . . page 22
Configure Device Outputs . . . . . page 28
Inputting device information . . . . . page 35
Configure measurement filtering . . . . . page 37
Diagnostics and service . . . . . page 39
Establishing multidrop communication . . . . . page 44
Using the transmitter with the HART Tri-Loop . . . . . page 45

2.1 Overview

This section contains information on commissioning and tasks that should be performed on the bench prior to installation. Field Communicator, AMS Device Manager, and Local Operator Interface (LOI) instructions are given to perform configuration functions. For convenience, Field Communicator fast key sequences are labeled “Fast Keys,” and abbreviated LOI menus are provided for each function below. The Local Operator Interface is only available on the 644 Head mount design and the configuration instructions referencing the interface will not apply to the Rail mount form factor.

Full Field Communicator menu trees and fast key sequences are available in Appendix C: Field Communicator Menu Trees and Fast Keys. Local Operator Interface menu trees are available in Appendix D: Local Operator Interface (LOI).

2.2 Safety Messages

Instructions and procedures in this section may require special precautions to ensure the safety of the personnel performing the operations. Information that potentially raises safety issues is indicated by a warning symbol (⚠). Please refer to the following safety messages before performing an operation preceded by this symbol.

Warnings

⚠ WARNING

Failure to follow these installation guidelines could result in death or serious injury.

- Make sure only qualified personnel perform the installation.

Explosions could result in death or serious injury.

- Do not remove the connection head cover in explosive atmospheres when the circuit is live.
- Before connecting a Field Communicator in an explosive atmosphere, make sure the instruments in the loop are installed in accordance with intrinsically safe or non-incendive field wiring practices.
- Verify that the operating atmosphere of the transmitter is consistent with the appropriate hazardous locations certifications.
- All connection head covers must be fully engaged to meet explosion-proof requirements.

Process leaks could result in death or serious injury.

- Do not remove the thermowell while in operation.
- Install and tighten thermowells and sensors before applying pressure.

Electrical shock could cause death or serious injury.

- Use extreme caution when making contact with the leads and terminals.

2.3 System readiness

Confirm HART revision capability

- If using HART based control or asset management systems, please confirm the HART capability of those systems prior to transmitter installation. Not all systems are capable of communicating with HART Revision 7 protocol. This transmitter can be configured for either HART Revision 5 or 7.
- For instructions on how to change the HART revision of your transmitter, see "Switching HART Revision" on page 82.

2.3.1 Confirm correct device driver

- Verify the latest Device Driver files are loaded on your systems to ensure proper communications.
- Download the latest Device Driver at www.emersonprocess.com or www.hartcomm.org

Table 2-1. Rosemount 644 Device Revisions and Files

Software Date	Identify Device		Find Device Driver Files		Review Instructions	Review Functionality
Date	NAMUR Software Revision	HART Software Revision	HART Universal Revision(1)	Device Revision(2)	Manual Document Number	Changes to Software(3)
June 2012	1.1.1	01	5	8	00809-0100-4728	See footnote 3 for list of changes
			7	9		

(1) NAMUR Software Revision is located on the hardware tag of the device. HART Software Revision can be read using a HART communication tool.

(2) Device Driver file names use Device and DD Revision, e.g. 10_01. HART Protocol is designed to enable legacy device driver revisions to continue to communicate with new HART devices. To access new functionality, the new Device Driver must be downloaded. It is recommended to download the new Device Driver files to ensure full functionality

(3) HART Revision 5 and 7 Selectable. Dual Sensor support, Safety Certified, Advanced Diagnostics (if ordered), Enhanced Accuracy and Stability (if ordered).

2.3.2 Surges/Transients

The transmitter will withstand electrical transients of the energy level encountered in static discharges or induced switching transients. However, high-energy transients, such as those induced in wiring from nearby lightning strikes, welding, heavy electrical equipment, or switching gears, can damage both the transmitter and the sensor. To protect against high-energy transients, install the transmitter into a suitable connection head with the integral transient protector, option T1. Refer to the 644 Data Sheet for more information.

2.4 Configuration Methods

⚠ CAUTION

Set all transmitter hardware adjustments during commissioning to avoid exposing the transmitter electronics to the plant environment after installation.

The Rosemount 644 can be configured either before or after installation. Configuring the transmitter on the bench using either a Field Communicator, AMS Device Manager, or Local Operator Interface (LOI) ensures all transmitter components are in working order prior to installation.

The 644 transmitter can be configured either on-line or off-line using a Field Communicator, AMS Device Manager or the optional Local Operator Interface (LOI) (Head mount only). During on-line configuration, the transmitter is connected to a Field communicator. Data is entered in the working register of the communicator and sent directly to the transmitter.

Off-line configuration consists of storing configuration data in a Field Communicator while it is not connected to a transmitter. Data is stored in nonvolatile memory and can be downloaded to the transmitter at a later time.

2.4.1 Configuring on the bench

To configure on the bench, required equipment includes a power supply, a digital multimeter (DMM), and a Field Communicator, AMS Device Manager, or a Local Operator Interface (LOI – Option M4).

Connect the equipment as shown in Figure 2-1. Connect HART Communication leads at any termination point in the signal loop. To ensure successful HART communication, a resistance of at least 250 ohms must be present between the transmitter and the power supply. Connect the Field Communicator leads to the clips behind the power (+,-) terminals on the top of the device. Avoid exposing the transmitter electronics to the plant environment after installation by setting all transmitter jumpers during the commissioning stage on the bench.

Figure 2-1. Powering the transmitter for Bench Configuration

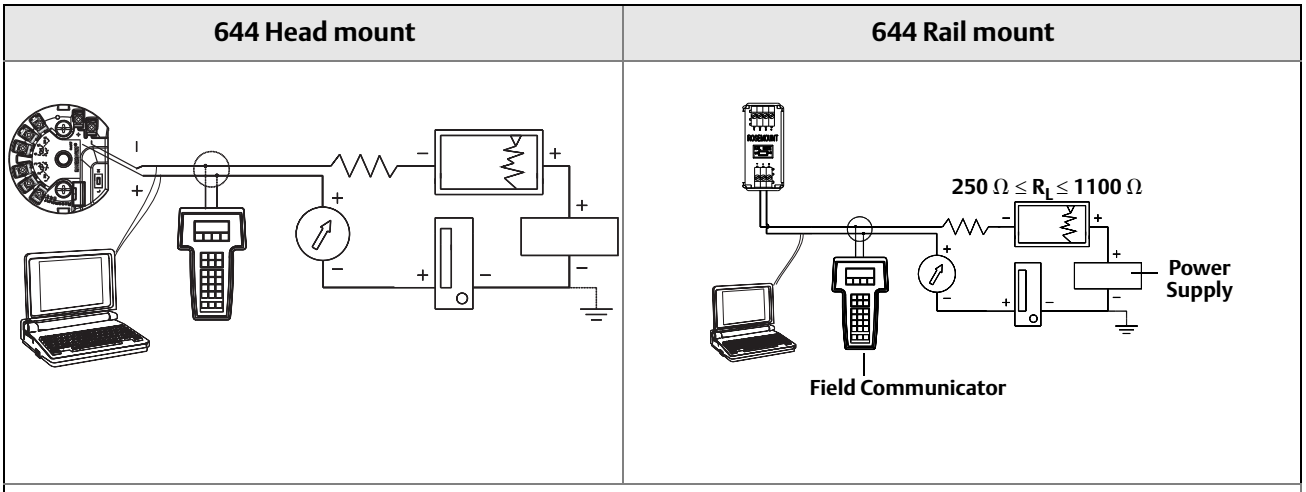

Note: Signal loop may be grounded at any point or left ungrounded.
Note: A Field Communicator may be connected at any termination point in the signal loop. The signal loop must have between 250 and 1100 ohms load for communications.
Note: Max torque is 6 in.-lbs (0/7 N-m)

2.4.2 Choosing a configuration tool

Configuring with a Field Communicator

The Field Communicator is a handheld device that exchanges information with the transmitter from the control room, the instrument site, or any wiring termination point in the loop. To facilitate communication, connect the Field Communicator, shown in this manual, in parallel with the transmitter (see Figure 2-1). Use the loop connection ports on the rear panel of the Field Communicator. The connections are non-polarized. Do not make connections to the serial port or the NiCad recharger jack in explosive atmospheres. Before connecting the Field Communicator in an explosive atmosphere make sure the instruments in the loop are installed in accordance with intrinsically safe or non-incendive field wiring practices.

There are two interfaces available with the Field Communicator: Traditional and Dashboard interfaces. All steps using a Field Communicator will be using Dashboard interfaces. Figure 2-2 shows the Device Dashboard interface. As stated in "System readiness" on page 9, it is critical that the latest DD's are loaded into the Field Communicator for optimal transmitter performance.

Visit www.emersonprocess.com to download latest DD library.

Turn on the Field Communicator by pressing the ON/OFF key. The Field Communicator will search for a HART-compatible device and indicate when the connection is made. If the Field Communicator fails to connect, it indicates that no device was found. If this occurs, refer to Section 6: Troubleshooting.

Figure 2-2. Field Communicator Device Dashboard Interface

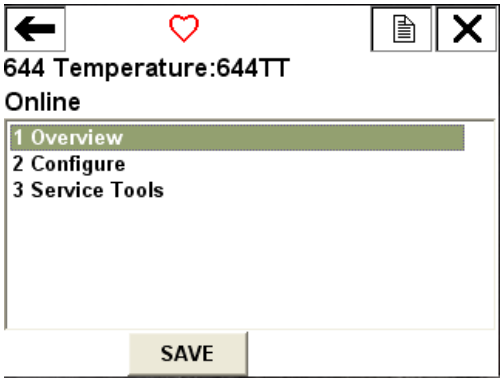

Field Communicator menu trees and fast keys are available in Appendix C: Field Communicator Menu Trees and Fast Keys Configuring with AMS Device Manager

With an AMS Device Manager software package, you can commission and configure instruments, monitor status and alerts, troubleshoot from the control room, perform advanced diagnostics, manage calibration, and automatically document activities with a single application.

Full configuration capability with AMS Device Manager requires loading the most current Device Descriptor (DD) for this device. Download the latest DD at www.emersonprocess.com, or www.hartcomm.org.

Note
All steps listed in this product manual using AMS Device Manager assume the use Version 11.5.

Configuring with a Local Operator Interface

The LOI requires option code M4 to be ordered. To activate the LOI push either configuration button. Configuration buttons are located on the LCD Display (must remove housing cover to access the interface. See Table 2-2 for configuration button functionality and Figure 2-3 for configuration button location. When using the LOI for configuration, several features require multiple screens for a successful configuration. Data entered will be saved on a screen-by-screen basis; the LOI will indicate this by flashing “SAVED” on the LCD Display each time.

Note
Entering into the LOI menu effectively disables the ability to write to the device by any other host or configuration tool. Please make sure this is communicated to necessary personnel before using the LOI for device configuration.

Figure 2-3. LOI configuration buttons

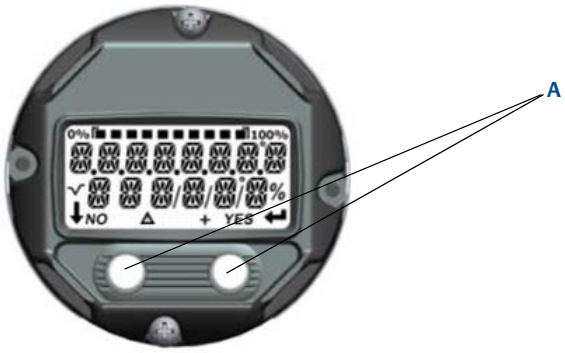

A. Configuration Buttons

Table 2-2. LOI Button Operation

Button	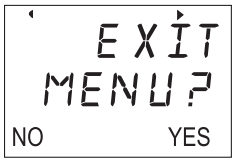	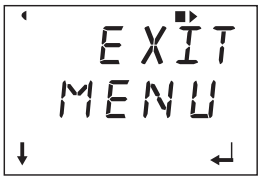
Left	No	SCROLL
Right	Yes	ENTER

Local Operator Interface Password

A Local Operator Interface Password can be entered and enabled to prevent review and modification of device configuration via the LOI. This does not prevent configuration from HART or through the control system. The LOI password is a 4 digit code that is to be set by the user. If the password is lost or forgotten the master password is “9307”. The LOI password can be configured and enabled/disabled by HART communication via a Field Communicator, AMS Device Manager, or the LOI.

Local Operator Interface menu trees are available in Appendix D: Local Operator Interface (LOI).

2.4.3 Setting the Loop to Manual

⚠ When sending or requesting data that would disrupt the loop or change the output of the transmitter, set the process application loop to manual. The Field Communicator, AMS Device Manager or LOI will prompt you to set the loop to manual when necessary. Acknowledging this prompt does not set the loop to manual. **The prompt is only a reminder; set the loop to manual as a separate operation.**

2.4.4 Failure Mode

As part of normal operation, each transmitter continuously monitors its own performance. This automatic diagnostics routine is a timed series of checks repeated continuously. If diagnostics detect an input sensor failure or a failure in the transmitter electronics, the transmitter drives its output to low or high depending on the position of the failure mode switch. If the sensor temperature is outside the range limits, the transmitter saturates its output to 3.9 mA for standard configuration on the low end (3.8 mA if configured for NAMUR-compliant operation) and 20.5 mA on the high end (or NAMUR-compliant). These values are also custom configurable by the factory or using the Field Communicator.The values to which the transmitter drives its output in failure mode depend on whether it is configured to standard, NAMUR-compliant, or custom operation. See "Hardware and Software Failure Mode" on page 108 for standard and NAMUR-compliant operation parameters.

2.4.5 HART Software Lock

The HART Software Lock prevents changes to the transmitter configuration from all sources; all changes requested via HART by the Field Communicator, AMS Device manager or the LOI will be rejected. The HART Lock can only be set via HART communication, and is only available in HART Revision 7 mode. The HART Lock can be enabled or disabled with a Field Communicator or AMS Device Manager.

Configuring HART Lock using a Field Communicator

From the *HOME* screen, enter the fast key sequence

Device Dashboard Fast Keys	3, 2, 1

Configuring HART Lock using AMS Device Manager

1. Right click on the device and select **Configure**.
2. Under *Manual Setup* select the **Security** tab.
3. Click **Lock/Unlock** button under *HART Lock (Software)* and follow the screen prompts.

2.5 Verify configuration

It is recommended that various configuration parameters are verified prior to installation into the process. The various parameters are detailed out for each configuration tool. Depending on what configuration tool(s) are available follow the steps listed relevant to each tool.

2.5.1 Verify and review configuration with Field Communicator

Configuration parameters listed in Figure 2-3 below are the basic parameters that should be reviewed prior to transmitter installation. A full list of configuration parameters that can be reviewed and configured using a Field Communicator are located in Appendix C: Field Communicator Menu Trees and Fast Keys. A Rosemount 644 Device Descriptor (DD) must be installed on the Field Communicator to verify configuration.

1. Verify device configuration using fast key sequences in Figure 2-3.
   a. From the *HOME* screen, enter the fast key sequences listed in Figure 2-3.

Table 2-3. 644 Device Dashboard Fast Key sequences

	Fast Key Sequence	
Function	**HART 5**	**HART 7**
Alarm Values	2, 2, 5, 6	2, 2, 5, 6
Damping Values	2, 2, 1, 5	2, 2, 1, 6
Lower Range Value (LRV)	2, 2, 5, 5, 3	2, 2, 5, 5, 3
Upper Range Value (URV)	2, 2, 5, 5, 2	2, 2, 5, 5, 2
Primary Variable	2, 2, 5, 5, 1	2, 2, 5, 5, 1
Sensor 1 Configuration	2, 1, 1	2, 1, 1
Sensor 2 Configuration(1)	2, 1, 1	2, 1, 1
Tag	2, 2, 7, 1, 1	2, 2, 7, 1, 1
Units	2, 2, 1, 5	2, 2, 1, 4

(1) Available only if option code (S) is ordered.

2.5.2 Verify and review configuration with AMS Device Manager

Right click on the device and select **Configuration Properties** from the menu. Navigate the tabs to review the transmitter configuration data.

2.5.3 Verify and review configuration with Local Operator Interface

Press any configuration button to activate the LOI. Select **VIEW CONFIG** to review the below parameters. Use the configuration buttons to navigate through the menu. The parameters to be reviewed prior to installation include:

- Tag
- Sensor Configuration
- Units
- Alarm and Saturation Levels
- Primary Variable
- Range Values
- Damping

2.5.4 Checking transmitter output

Before performing other transmitter on-line operations, review the 644 digital output parameters to ensure that the transmitter is operating properly and is configured to the appropriate process variables.

Checking or setting process variables

The **Process Variables** menu displays process variables, including sensor temperature, percent of range, analog output, and terminal temperature. These process variables are continuously updated. The default primary variable is Sensor 1. The secondary variable is the transmitter terminal temperature by default.

Checking process variables with a Field Communicator

From the *HOME* screen, enter the fast key sequence

Device Dashboard Fast Keys	3, 2, 1

Checking process variables with AMS Device Manager

Right click on the device and select **Service Tools** from the menu. The *Variables* tab displays the following process variables:

- Primary, Second, Third and Fourth variables, as well as the Analog Output.

Checking process variables with Local Operator Interface

To check the process variables from the LOI, the user must first configure the display to show the desired variables (see "Configuring the LCD Display" on page 33). Once the desired device variables are chosen, simply EXIT the LOI menu and view the alternating values on the display screen.

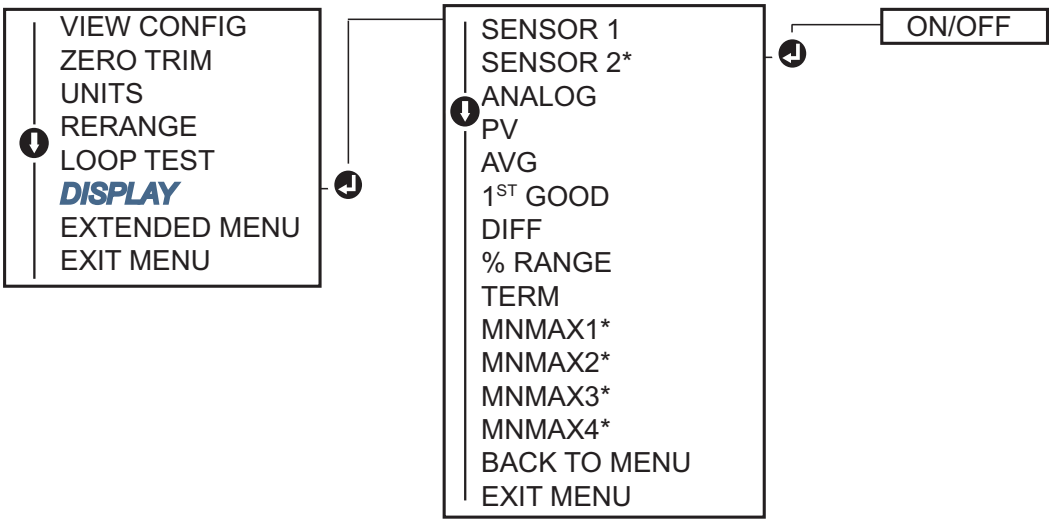

2.6 Basic Configuration of the transmitter

The 644 must be configured for certain basic variables in order to be operational. In many cases, all of these variables are pre-configured at the factory. Configuration may be required if the transmitter is not configured or if the configuration variables need revision.

2.6.1 Mapping the HART® Variables

Mapping the HART® Variables with a Field Communicator

The Variable Mapping menu displays the sequence of the process variables. Select the sequence below to change this configuration. The 644 single sensor input configuration screens allow selection of the primary variable (PV) and the secondary variable (SV). When the Select PV screen appears Snsr 1 must be selected.

The 644 dual-sensor option configuration screens allow selection of the primary variable (PV), secondary variable (SV), tertiary variable (TV), and quaternary variable (QV). Variable choices are Sensor 1, Sensor 2, Differential Temperature, Average Temperature, Terminal Temperature, and Not Used. The 4-20 mA analog signal represents the Primary Variable.

From the *HOME* screen, enter the fast key sequence

Device Dashboard Fast Keys	2, 2, 8, 6

Mapping the HART® Variables with AMS Device Manager

Right click on the device and select the **Configure** menu.

1. In the left navigation pane choose **Manual Setup** then on the **HART tab**.
2. Map each variable individually or use the **Re-map Variables** method to guide you through the re-mapping process.
3. Click **Apply** when complete.

Mapping the HART® Variables with the Local Operator Interface

Follow flow chart to select the desired mapped variables. Use the **SCROLL** and **ENTER** buttons to select each variable. Save by selecting **SAVE** as indicated on the LCD screen when prompted. See Figure 2-4 on page 17 for an example of a mapped variable with the LOI.

Figure 2-4. Mapping Variables with LOI

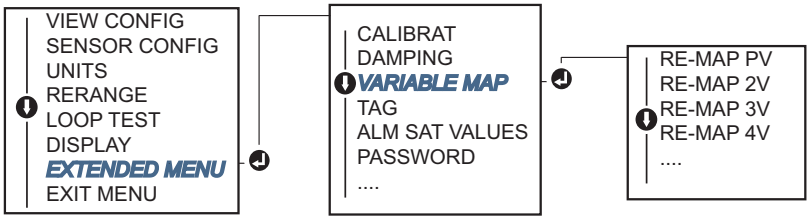

2.6.2 Configuring the Sensor(s)

Sensor configuration includes setting the information for:

- Sensor Type
- Connection Type
- Units
- Damping values
- Sensor Serial Number
- RTD 2-Wire Offset

Configuring the Sensor(s) with a Field Communicator

The Configure Sensors method will guide you through the configuration of all necessary settings associated with configuring a sensor including:

For a full list of Sensor Types available with the 644 and their associated levels of accuracy, please see Table A-2 on page 110.

From the *HOME* screen, enter the fast key sequence

Device Dashboard Fast Keys	2, 1, 1

Configuring Sensor(s) with AMS Device Manager

Right click on the device and select **Configure**.

1. In the left navigation pane choose **Manual Setup** and choose the **Sensor 1** or **Sensor 2** tab depending on the need.
2. Individually select the Sensor Type, Connection, Units and other sensor related information as desired from the drop down menus on the screen.
3. Click **Apply** when complete.

Configuring the Sensor(s) with the Local Operator Interface

Reference the below image for guidance on where to find Sensor Configuration in the LOI menu.

Figure 2-5. Configuring Sensors with LOI

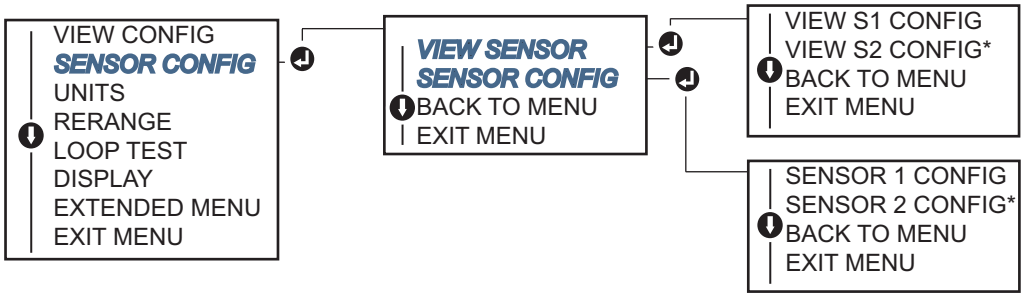

* Available only if option code (S) is ordered.

Contact a Emerson Process Management representative for information on the temperature sensors, thermowells, and accessory mounting hardware that is available through Emerson Process Management.

2-Wire RTD Offset

The 2-wire Offset feature allows the measured lead wire resistance to be input and corrected for, which results in the transmitter adjusting its temperature measurement for the error caused by this added resistance. Because of a lack of lead wire compensation within the RTD, temperature measurements made with a 2-wire RTD are often inaccurate.

This feature can be configured as a subset of the **Sensor Configuration** process in the Field Communicator, AMS Device Manager, and the Local Operator Interface.

To utilize this feature properly perform the following steps:

1. Measure the lead wire resistance of both RTD leads after installing the 2-Wire RTD and 644.
2. Navigate to the 2-Wire RTD Offset parameter:
3. Enter the total measured resistance of the two RTD leads at the *2-Wire Offset* prompt to ensure proper adjustment. The transmitter will adjust its temperature measurement to correct the error caused by lead wire resistance.

Enter 2-Wire Offset with Field Communicator:

From the *HOME* screen, enter the fast key sequence

Device Dashboard Fast Keys	2, 1, 1

Enter 2-Wire Offset with AMS Device Manager:

Right click on the device and select **Configure**.

1. In the left navigation pane choose **Manual Setup** and choose the **Sensor 1** or **Sensor 2** tab depending on the need. Find the 2-Wire Offset text field and enter the value.
2. Click **Apply** when complete.

2.6.3 Setting Output Units

The Units can be configured for a number of different parameters in the 644. Individual Units can be configured for:

- Sensor 1
- Sensor 2
- Terminal Temperature
- Differential Temperature
- Average Temperature
- First Good Temperature

Each of the base parameters and calculated outputs from those values can have a Unit of measure associated with it. Set the transmitter output to one of the following engineering units:

- Degrees Celsius
- Degrees Fahrenheit
- Degrees Rankine
- Kelvin
- Ohms
- Millivolts

Setting Output Units with a Field Communicator

From the *HOME* screen, enter the fast key sequence	HART 5	HART 7
Device Dashboard Fast Keys	2, 2, 1, 4	2, 2, 1, 5

Setting Output Units with AMS Device Manager

Right click on the device and select **Configure**.

1. In the left navigation pane choose **Manual Setup**. The unit fields for various variables are spread over the Manual Setup tabs, please click through the tabs and change the desired units.

2. Click **Apply** when complete.

Setting Output Units with the Local Operator Interface

Reference the below image for where to find the **Units** configuration in the LOI menu.

Figure 2-6. Configuring Units with LOI

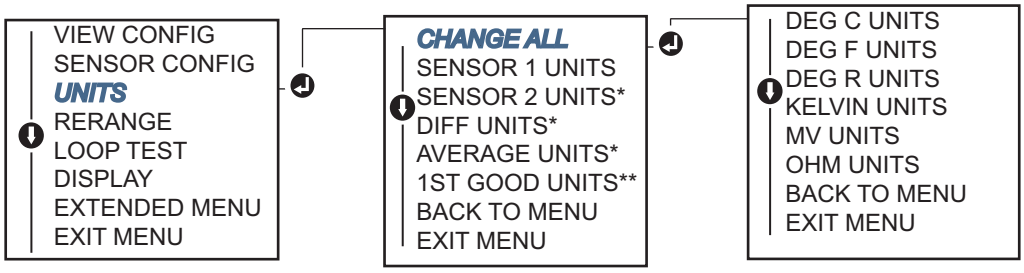

* Available only if option code (S) is ordered.

** Available only if option Codes (S) and (DC) are both ordered.

Note
The list of choices available for Units after the primary menu is dependent on your Sensor configuration settings.

2.7 Configure Dual Sensor Options

Dual-sensor configuration deals with the functions that can be used with a transmitter ordered with Dual Sensor inputs. In the Rosemount 644 these functions include:

- Differential Temperature
- Average Temperature
- Hot Backup and Sensor Drift Alert Diagnostics (requires option code DC)
  - First Good Temperature (requires options S and DC)

2.7.1 Differential Temperature Configuration

The 644 ordered and configured for dual-sensors can accept any two inputs then display the differential temperature between them. Use the following procedures to configure the transmitter to measure differential temperature.

Note
This procedure assumes the Differential Temperature is a calculated output of the device but does not re-assign it as the Primary Variable. If it desired for Differential to be the transmitter's primary variable please see Section 2.6.1 Mapping the HART® Variables to set it to PV.

Differential Temperature Configuration with Field Communicator

From the *HOME* screen, enter the fast key sequence

Device Dashboard Fast Keys	2, 2, 3, 1

Differential Temperature Configuration with AMS Device Manager

Right click on the device and select **Configure**.

1. In the left navigation pane choose **Manual Setup**.
2. On the **Calculated Output Tab** find the **Differential Temperature** group box.
3. Choose Units and Damping settings then click **Apply** when complete.

Differential Temperature Configuration with Local Operator Interface

To configure the Differential Temperature on the Local Operator Interface you will have to set the Units and Damping values separately. Reference Figure 2-7 and Figure 2-8 below for where to find these in the menu.

Figure 2-7. Configuring Differential Units with LOI

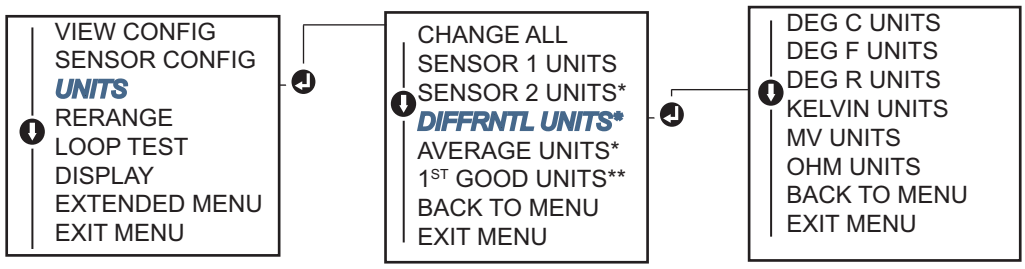

* Available only if option code (S) is ordered.

** Available only if option codes (S) and (DC) are both ordered.

Figure 2-8. Configuring Differential Damping with LOI

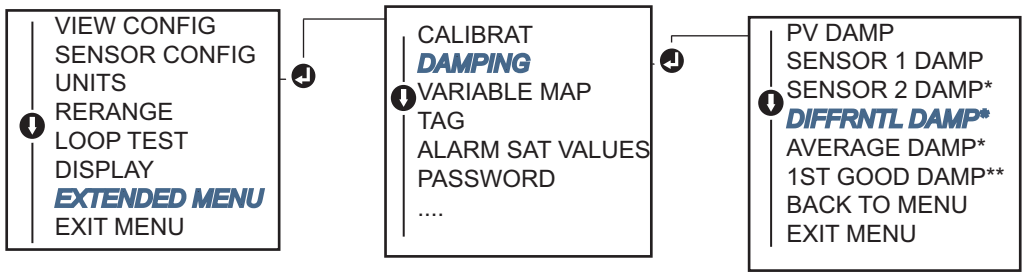

* Available only if option code (S) is ordered.

** Available only if option codes (S) and (DC) are both ordered.

2.7.2 Average Temperature Configuration

The 644 transmitter ordered and configured for dual-sensors can output and display the Average temperature of any two inputs. Use the following procedures to configure the transmitter to measure the Average temperature:

Note
This procedure assumes the Average Temperature is a calculated output of the device but does not re-assign it as the Primary Variable. If it is desired for Average to be the transmitter's primary variable please see "Mapping the HART® Variables" on page 17 to set it to PV.

Average Temperature Configuration with a Field Communicator

From the *HOME* screen, enter the fast key sequence

Device Dashboard Fast Keys	2, 2, 3, 3

Average Temperature Configuration with AMS Device Manager

Right click on the device and select **Configure**.

1. In the left navigation pane choose **Manual Setup**.
2. On the **Calculated Output Tab** find the *Average Temperature* group box.
3. Choose Units and Damping settings then click **Apply** when complete.

Average Temperature Configuration with Local Operator Interface

To configure Average Temperature on the Local Operator Interface you will have to set the Units and Damping values separately. Reference Figure 2-9 and Figure 2-10 below for where to find these in the menu.

Figure 2-9. Configuring Average Units with LOI

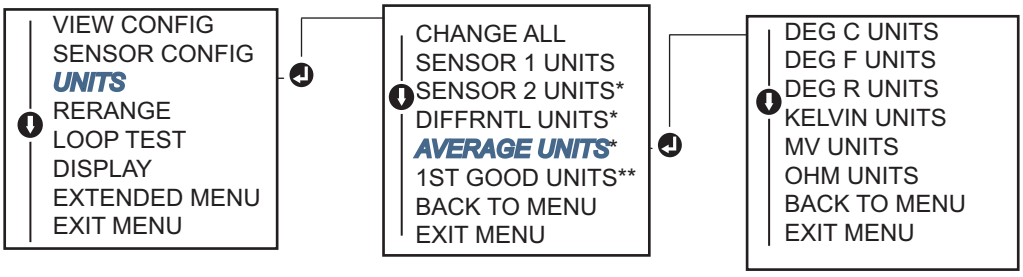

* Available only if option code (S) is ordered.

** Available only if option codes (S) and (DC) are both ordered.

Figure 2-10. Configuring Average Damping with LOI

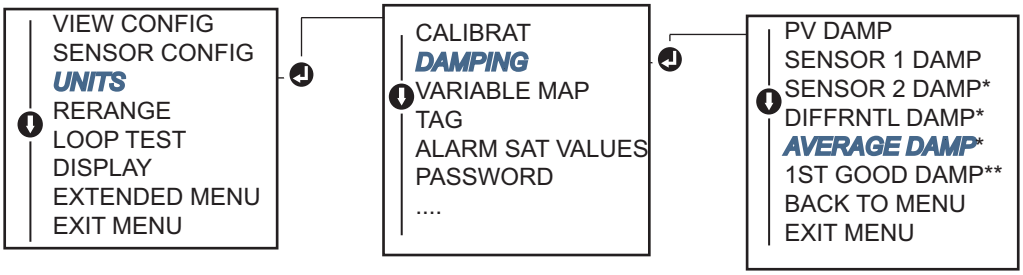

* Available only if option code (S) is ordered.

** Available only if option codes (S) and (DC) are both ordered

Note
If Sensor 1 and/or Sensor 2 should fail while PV is configured for average temperature and Hot Backup is not enabled, the transmitter will go into alarm. For this reason, it is recommended when PV is Sensor Average, that Hot Backup be enabled when dual-element sensors are used, or when two temperature measurements are taken from the same point in the process. If a sensor failure occurs when Hot Backup is enabled, while PV is Sensor Average, three scenarios could result:

- If Sensor 1 fails, the average will only be reading from Sensor 2, the working sensor
- If Sensor 2 fails, the average will only be reading from Sensor 1, the working sensor
- If both sensors fail simultaneously, the transmitter will go into alarm and the status available (via HART) states that both Sensor 1 and Sensor 2 have failed

In the first two scenarios, the 4-20 mA signal is not disrupted and the status available to the control system (via HART) specifies which sensor has failed.

2.7.3 Hot Backup Configuration

The Hot Backup feature configures the transmitter to automatically use Sensor 2 as the primary sensor if Sensor 1 fails. With Hot Backup enabled, the primary variable (PV) must either be First Good or Average. See the “NOTE” directly above for details on using Hot Backup when the PV is set to Average.

Sensors 1 or 2 can be mapped as the secondary variable (SV), tertiary variable (TV), or quaternary variable (QV). In the event of a primary variable (Sensor 1) failure, the transmitter enters Hot Backup mode and Sensor 2 becomes the PV. The 4–20 mA signal is not disrupted, and a status is available to the control system through HART that Sensor 1 has failed. An LCD display, if attached, displays the failed sensor status.

While configured to Hot Backup, if Sensor 2 fails but Sensor 1 is still operating properly, the transmitter continues to report the PV 4–20 mA analog output signal, while a status is available to the control system through HART that Sensor 2 has failed.

Resetting Hot Backup:

In Hot Backup mode, if Sensor 1 does fail and Hot Backup is initiated, the transmitter will not revert back to Sensor 1 to control the 4–20 mA analog output until the Hot Backup mode is reset by re-enabling through HART, re-setting it through the LOI or by briefly powering down the transmitter.

Hot Backup Configuration with a Field Communicator

The field communicator will walk you through a method to correctly configure the necessary elements of the Hot Backup feature.

From the *HOME* screen, enter the fast key sequence

Device Dashboard Fast Keys	2, 1, 5

Hot Backup Configuration with AMS Device Manager

Right click on the device and select **Configure**.

1. In the left navigation pane choose **Manual Setup**.
2. On the *Diagnostics Tab* find the **Hot Backup** group box.
3. Choose the button “Configure Hot Backup” or “Reset Hot Backup” depending on the desired function and walk through the guided steps.
4. Click **Apply** when complete.

Hot Backup Configuration with Local Operator Interface

To configure Hot Backup on the Local Operator Interface, you will have to Enable the Mode and set the PV values. Reference Figure 2-11 below for where to find these in the menu.

Figure 2-11. Configuring Hot Backup with LOI

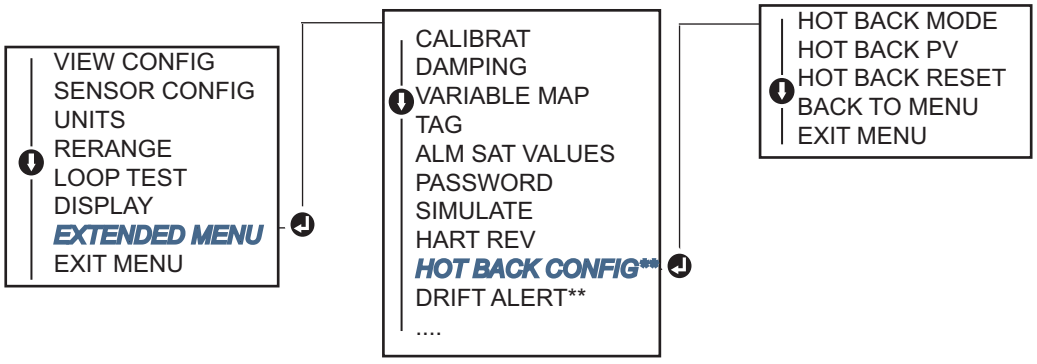

* Available only if option code (S) is ordered.

** Available only if option Codes (S) and (DC) are both ordered.

For information on using Hot Backup in conjunction with the HART Tri-Loop see “Using the transmitter with the HART Tri-Loop” on page 45.

2.7.4 Sensor Drift Alert Configuration

The Sensor Drift Alert command allows the transmitter to set a warning flag (through HART), or go into analog alarm when the temperature difference between Sensor 1 and Sensor 2 exceeds a user-defined limit.

This feature is useful when measuring the same process temperature with two sensors, ideally when using a dual-element sensor. When Sensor Drift Alert mode is enabled, the user sets the maximum allowable difference, in engineering units, between Sensor 1 and Sensor 2. If this maximum difference is exceeded, a Sensor Drift Alert warning flag will be set.

Though it defaults to WARNING, when configuring the transmitter for Sensor Drift Alert, the user also has the option of specifying that the analog output of the transmitter go into ALARM when sensor drifting is detected.

Note
Using dual sensor configuration in the 644, the temperature transmitter supports the configuration and simultaneous use of Hot Backup and Sensor Drift Alert. If one sensor fails, the transmitter switches output to use the remaining good sensor. Should the difference between the two sensor readings exceed the configured threshold, the AO will go to alarm indicating the sensor drift condition. The combination of Sensor Drift Alert and Hot Backup improves sensor diagnostic coverage while maintaining a high level of availability. Refer to the 644 FMEDA report for the impact on safety.

Sensor Drift Alert Configuration with a Field Communicator

The field communicator will walk you through a method to correctly configure the necessary elements of a Sensor Drift Alert feature.

From the *HOME* screen, enter the fast key sequence

Device Dashboard Fast Keys	2, 1, 6

Sensor Drift Alert Configuration with AMS Device Manager

1. Right click on the device and select **Configure**.
2. On the **Diagnostics Tab** find the **Sensor Drift Alert** group box.
3. Choose to **Enable** the **Mode** and fill in the **Units**, **Threshold** and **Damping** values from the drop downs provided or click the "**Configure Sensor Drift Alert**" button and walk through the guided steps.
4. Click **Apply** when complete.

Sensor Drift Alert Configuration with Local Operator Interface

To configure Sensor Drift Alert on the Local Operator Interface you will have to Enable the Mode, set the PV, set the Drift Limit and set a value for Drift Alert Damping all separately. Reference Figure 2-12 below for where to find these in the menu.

Figure 2-12. Configuring sensor drift alert with LOI

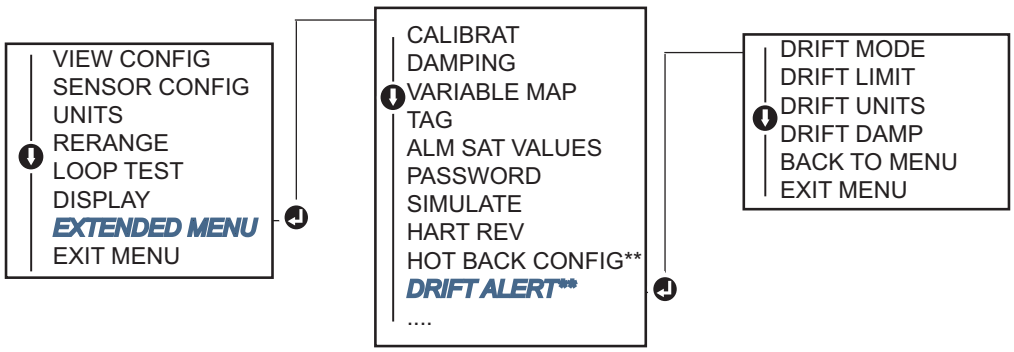

* Available only if option code (S) is ordered.

** Available only if option Codes (S) and (DC) are both ordered.

Note
Enabling the Drift Alert Option to WARNING will set a flag (through the HART communications) whenever the maximum acceptable difference between Sensor 1 and Sensor 2 has been exceeded. For the transmitter's analog signal to go into ALARM when Drift Alert is detected, select Alarm during the configuration process.

2.8 Configure Device Outputs

2.8.1 Rerange the transmitter

⚠ Reranging the transmitter sets the measurement range to the limits of the expected readings for a certain application. Setting the measurement range to the limits of expected readings maximizes transmitter performance; the transmitter is most accurate when operated within the expected temperature range for the application.

The range of expected readings is defined by the Lower Range Value (LRV) and Upper Range Value (URV). The transmitter range values can be reset as often as necessary to reflect changing process conditions. For a complete listing of Range & Sensor limits, refer to Table A-2 on page 110.

Note
The rerange functions should not be confused with the trim functions. Although the rerange function matches a sensor input to a 4–20 mA output, as in conventional calibration, it does not affect the transmitter's interpretation of the input.

Select from one of the methods below to rerange the transmitter.

Rerange the transmitter with a Field Communicator

From the *HOME* screen, enter the fast key sequence	Lower Range Value	Upper Range Value
Device Dashboard Fast Keys	2, 2, 5, 5, 3	2, 2, 5, 5, 2

Rerange the transmitter with AMS Device Manager

Right click on the device and select **Configure**.

1. In the left navigation pane choose **Manual Setup**.
2. On the **Analog Output Tab** find the Primary Variable Configuration group box.
3. Change the **Upper Range Value** and **Lower Range Value** to their desired settings.
4. Click **Apply** when complete.

Rerange the transmitter with Local Operator Interface

Please reference the image below to find the Range Value configuration path on the LOI.

Figure 2-13. Reranging the transmitter with LOI



2.8.2 Damping

The Damping function changes the response time of the transmitter to smooth variations in output readings caused by rapid changes in input. Determine the appropriate damping setting based on the necessary response time, signal stability, and other requirements of the loop dynamics of the system. The default damping value is 5.0 seconds and can be reset to any value between 1 and 32 seconds.

The value chosen for damping affects the response time of the transmitter. When set to zero (disabled), the damping function is off and the transmitter output reacts to changes in input as quickly as the intermittent sensor algorithm allows. Increasing the damping value increases transmitter response time.

With damping enabled, if the temperature change is within 0.2% of the sensor limits, the transmitter measures the change in input every 500 milliseconds (for a single sensor device) and outputs values according to the following relationship:

$$\text{Damped Value} = (N - P) \times \left(\frac{2T - U}{2T + U}\right) + P$$

P =previous damped value

N =new sensor value

T = damping time constant

U =update rate

At the value to which the damping time constant is set, the transmitter output is at 63% of the input change and it continues to approach the input according to the damping equation above.

For example, as illustrated in Figure 2-14, if the temperature undergoes a step change—within 0.2% of the sensor limits—from 100 degrees to 110 degrees, and the damping is set to 5.0 seconds, the transmitter calculates and reports a new reading every 500 milliseconds using the damping equation. At 5.0 seconds, the transmitter outputs 106.3 degrees, or 63% of the input change, and the output continues to approach the input curve according to the equation above.

For information regarding the damping function when the input change is greater than 0.2% of the sensor limits, refer to "Intermittent sensor detection" on page 38.

Figure 2-14. Change in Input vs. Change in Output with Damping Set to 5 Seconds

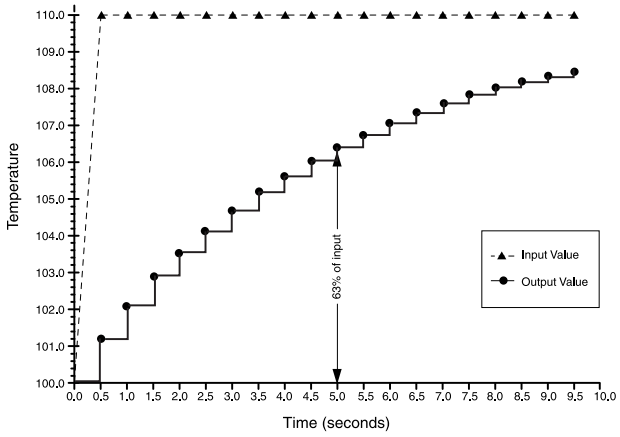

Damping can be applied to a number of parameters in the 644 transmitter. Variables that can be damped are:

- Primary Variable (PV)
- Sensor 1
- Sensor 2
- Differential Temperature
- Average Temperature
- 1st Good Temperature

Note
The instructions below only refer to the damping of the Primary Variable (PV).

Damping the transmitter with a Field Communicator

From the *HOME* screen, enter the fast key sequence	HART 5	HART 7
Device Dashboard Fast Keys	2, 2, 1, 5	2, 2, 1, 6

Damping the transmitter with AMS Device Manager

Right click on the device and select **Configure**.

1. In the left navigation pane choose **Manual Setup**.
2. On the **Sensor 1** Tab find the Setup group box.
3. Change the **Damping Value** to the desired setting.
4. Click **Apply** when complete.

Damping the transmitter with Local Operator Interface

Please reference the figure below to find the Damping configuration path on the LOI.

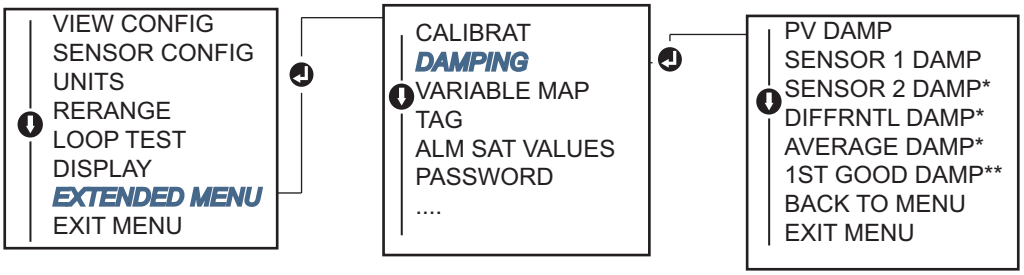

2.8.3 Configure Alarm and Saturation Levels

In normal operation, the transmitter will drive the output in response to measurements between the lower to upper saturation points. If the temperature goes outside the sensor limits, or if the output would be beyond the saturation points, the output will be limited to the associated saturation point.

The 644 transmitter automatically and continuously performs self-diagnostic routines. If the self-diagnostic routines detect a failure, the transmitter drives the output to configured alarm value based on the position of the alarm switch. The Alarm and Saturation settings allow the alarm settings (Hi or Low) and saturation values to be viewed and changed.

Failure mode alarm and saturation levels can be configured using a Field Communicator, AMS Device Manager, and the LOI. The following limitations exist for custom levels:

- The low alarm value must be less than the Low Saturation level.
- The high alarm value must be higher than the High Saturation level.
- Alarm and Saturation levels must be separated by at least 0.1 mA

The configuration tool will provide an error message if the configuration rule is violated.

Please see Table 2-4, Table 2-5, and Table 2-6 below for the common Alarm and Saturation levels.

Table 2-4. Rosemount alarm and saturation values

Level	4–20 mA saturation	4–20 mA alarm
Low	3.9 mA	≤ 3.75 mA
High	20.5 mA	≥ 21.75 mA

Table 2-5. NAMUR-Compliant alarm and saturation values

Level	4–20 mA saturation	4–20 mA alarm
Low	3.8 mA	≤ 3.6 mA
High	20.5 mA	≥22.5 mA

Table 2-6. Custom Alarm and Saturation Values

Level	4–20 mA saturation	4–20 mA alarm
Low	3.7 mA - 3.9 mA	3.6 mA - 3.8 mA
High	20.1 mA - 22.9 mA	20.2 mA - 23.0 mA

Note
Transmitters set to HART multidrop mode send all saturation and alarm information digitally; saturation and alarm conditions will not affect the analog output.

Configuring Alarm and Saturation Levels with a Field Communicator

From the *HOME* screen, enter the fast key sequence

Device Dashboard Fast Keys	2, 2, 5, 6

Configuring Alarm and Saturation Levels with AMS Device Manager

Right click on the device and select **Configure**.

1. In the left navigation pane choose **Manual Setup**.
2. On the **Analog Output** Tab find the Alarm and Saturation Levels group box.
3. Enter the High Alarm, High Saturation, Low Saturation and Low Alarm levels to the desired vales.
4. Click **Apply** when complete.

Configuring Alarm and Saturation Levels with the Local Operator Interface

Please reference the figure below to find the Alarm and Saturation value configuration path on the LOI.

Figure 2-15. Configuring Alarm and Saturation Values with LOI

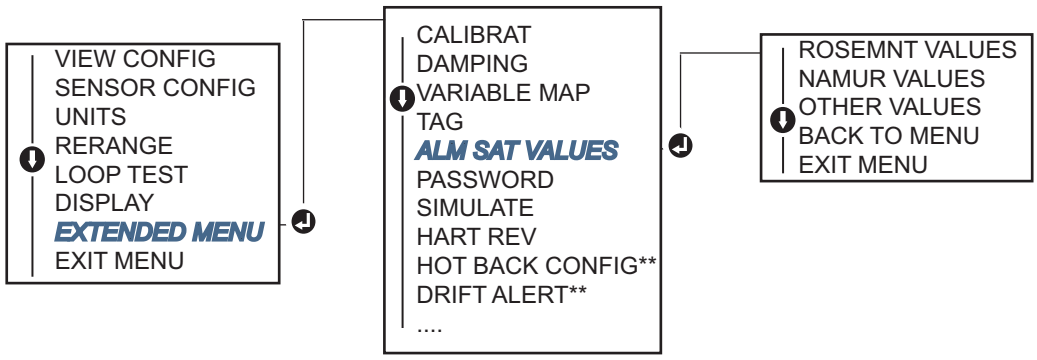

* Available only if option code (S) is ordered.

** Available only if option Codes (S) and (DC) are both ordered.

2.8.4 Configuring the LCD Display

The LCD Display configuration command allows customization of the LCD to suit application requirements. The LCD will alternate between the selected items with each item displaying for a 3 second interval.

- Sensor 1
- Sensor 2
- Analog Output
- Primary Variable
- Average Temperature
- First Good Temperature
- Differential Temperature
- Percent of Range
- Terminal Temperature
- Min and Max 1
- Min and Max 2
- Min and Max 3
- Min and Max 4

Reference Figure 2-16 to view the differences between the LCD and Local Operator Interface display options available with the 644.

Figure 2-16. LCD Display and Local Operator Interface Display

LCD Display	LOI Display
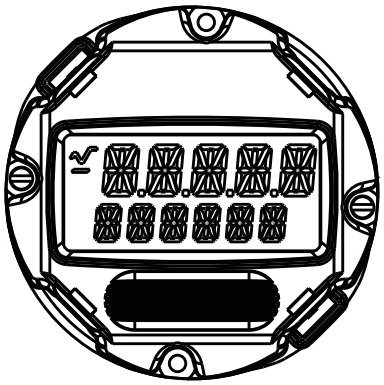	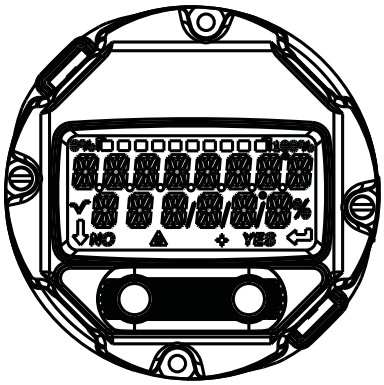

Configuring LCD Display with a Field Communicator

From the *HOME* screen, enter the fast key sequence

Device Dashboard Fast Keys	2, 1, 4

Configuring LCD Display with AMS Device Manager

Right click on the device and select **Configure**.

1. In the left navigation pane choose **Manual Setup**.
2. On the **Display** Tab there will be a group box with all available variables that can be displayed.
3. Check and un-check the desired display variables, with a checked box indicating that the variable will be displayed.
4. Click **Apply** when complete.

Configuring LCD Display with the Local Operator Interface

Please reference the figure below to find the LCD Display value configuration path on the LOI.

Figure 2-17. Configuring the LCD Display with the LOI

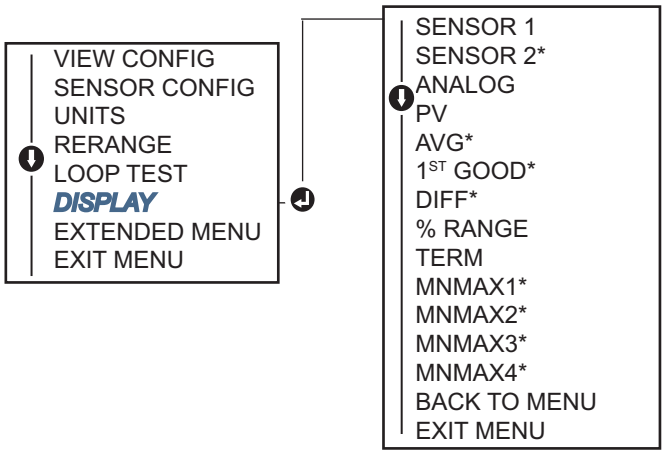

* Available only if option code (S) is ordered.

2.9 Inputting device information

Access the transmitter information variables online using the Field Communicator or other suitable communications device. The following is a list of transmitter information variables, including device identifiers, factory-set configuration variables, and other information.

2.9.1 Tag,date, descriptor and message

The *Tag*, *Date*, *Descriptor* and *Message* are parameters that provide transmitter identification in large installations. See below for a description and a process to enter these pieces of configurable device information.

The **Tag** variable is the easiest way to identify and distinguish between different transmitters in multi-transmitter environments. It is used to label transmitters electronically according to the requirements of the application. The defined Tag is automatically displayed when a HART-based communicator establishes contact with the transmitter at power-up. The Tag is up to 8 characters and the Long Tag (a parameter introduced with the HART 6 and 7 protocol) was extended to 32 characters long. Neither parameter has any impact on the primary variable readings of the transmitter, it is only for information.

The **Date** is a user-defined variable that provides a place to save the date of the last revision of configuration information. It has no impact on the operation of the transmitter or the HART-based communicator.

The **Descriptor** variable provides a longer user-defined electronic label to assist with more specific transmitter identification than is available with tag. The descriptor may be up to 16 characters long and has no impact on the operation of the transmitter or the HART-based communicator.

The **Message** variable provides the most specific user-defined means for identifying individual transmitters in multi-transmitter environments. It allows for 32 characters of information and is stored with the other configuration data. The message variable has no impact on the operation of the transmitter or the HART-based communicator.

Configuring Device Information with a Field Communicator

From the *HOME* screen, enter the fast key sequence

Device Dashboard Fast Keys	1, 8

Configuring Device Information with AMS Device Manager

Right click on the device and select **Configure**.

1. In the left navigation pane choose **Manual Setup**.
2. On the **Device** Tab there will be a group box called Identification, in the box find the fields **Tag**, **Date**, **Descriptor** and **Message**, and enter the desired characters.
3. Click **Apply** when complete.

Configuring Tag with the Local Operator Interface

Please reference the figure below to find the Tag configuration path in the LOI.

Figure 2-18. Configuring the Tag with LOI

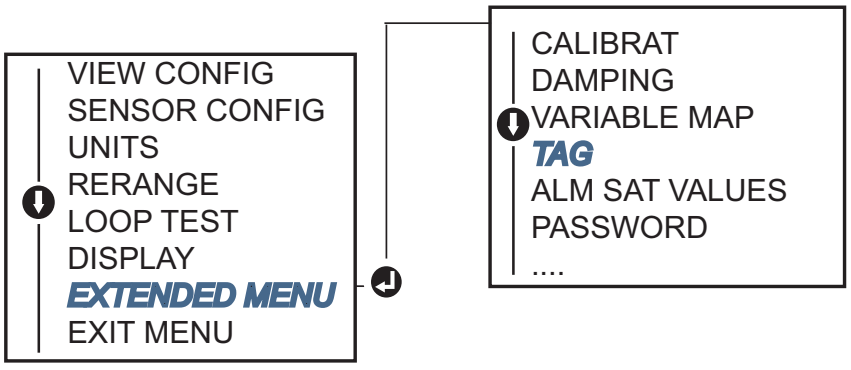

2.10 Configure measurement filtering

2.10.1 50/60 Hz filter

The 50/60 Hz Filter (also known as Line Voltage Filter or AC Power Filter) function sets the transmitter electronic filter to reject the frequency of the AC power supply in the plant. The 60 Hz or 50 Hz mode can be chosen. The factory default for this setting is 60 Hz.

Note
In high noise environments, normal mode is recommended.

Configuring 50/60 Hz filter with a Field Communicator

From the *HOME* screen, enter the fast key sequence

Device Dashboard Fast Keys	2, 2, 7, 4, 1

Configuring 50/60 Hz filter with AMS Device Manager

Right click on the device and select **Configure**.

1. In the left navigation pane choose **Manual Setup**.
2. On the **Device** Tab there will be a group box called **Noise Rejection**, in the box **AC Power Filter** choose from the drop down menu.
3. Click **Apply** when complete.

2.10.2 Resetting the device

Processor Reset function resets the electronics without actually powering down the unit. It does not return the transmitter to the original factory configuration.

Performing a Processor Reset with a Field Communicator

From the *HOME* screen, enter the fast key sequence

Device Dashboard Fast Keys	3, 4, 6, 1

Performing a Processor Reset AMS Device Manager

Right click on the device and select **Service Tools**.

1. In the left navigation pane choose **Maintenance**.
2. On the **Reset/Restore** Tab click the **Processor Reset** button.
3. Click **Apply** when complete.

2.10.3 Intermittent sensor detection

The **Intermittent Sensor Detection** feature (also known as the Transient Filter) is designed to guard against erratic process temperature readings caused by intermittent open sensor conditions. An intermittent sensor condition is an open sensor condition that lasts less than one update. By default, the transmitter is shipped with the Intermittent Sensor Detection feature switched **ON** and the threshold value set at 0.2% of sensor limits. The Intermittent Sensor Detect feature can be switched **ON** or **OFF** and the threshold value can be changed to any value between 0 and 100% of the sensor limits with a Field Communicator.

When the Intermittent Sensor Detection feature is switched **ON**, the transmitter can eliminate the output pulse caused by intermittent open sensor conditions. Process temperature changes (T) within the threshold value will be tracked normally by the transmitter's output. A (T) greater than the threshold value will activate the intermittent sensor algorithm. True open sensor conditions will cause the transmitter to go into alarm.

The threshold value of the 644 should be set at a level that allows the normal range of process temperature fluctuations; too high and the algorithm will not be able to filter out intermittent conditions; too low and the algorithm will be activated unnecessarily. The default threshold value is 0.2% of the sensor limits.

When the Intermittent Sensor Detection feature is switched **OFF**, the transmitter tracks all process temperature changes, even from an intermittent sensor. (The transmitter in effect behaves as though the threshold value had been set at 100%.) The output delay due to the intermittent sensor algorithm will be eliminated.

Configure Intermittent Sensor Detection with a Field Communicator

The following steps indicate how to turn the Intermittent Sensor Detect or Transient Filter) feature **ON** or **OFF**. When the transmitter is connected to a Field Communicator, use the fast key sequence and choose **ON** (normal setting) or **OFF**.

From the *HOME* screen, enter the fast key sequence

Device Dashboard Fast Keys	2, 2, 7, 4, 2

The threshold value can be changed from the default value of 0.2%. Turning the Intermittent Sensor Detect feature **OFF** or leaving it **ON** and increasing the threshold value above the default does not affect the time needed for the transmitter to output the correct alarm signal after detecting a true open sensor condition. However, the transmitter may briefly output a false temperature reading for up to one update in either direction up to the threshold value (100% of sensor limits if Intermittent Sensor Detect is **OFF**). Unless a rapid response rate is necessary, the suggested setting is **ON** with 0.2% threshold.

Configure Intermittent Sensor Detection with AMS Device Manager

Right click on the device and select **Configure**.

1. In the left navigation pane choose **Manual Setup**.
2. On the **Device** Tab there will be a group box called Noise Rejection, in the box **Transient Filter Threshold**, enter the desired percent.
3. Click **Apply** when complete.

2.10.4 Open sensor holdoff

The **Open Sensor Holdoff** option, at the normal setting, enables the 644 to be more robust under heavy EMI conditions. This is accomplished by the software having the transmitter perform additional verification of the open sensor status prior to activating the transmitter alarm. If the additional verification shows that the open sensor condition is not valid, the transmitter will not go into alarm.

For users of the 644 that desire a more vigorous open sensor detection, the Open Sensor Holdoff option can be changed to a fast setting where the transmitter will report an open sensor condition without additional verification of whether or not the open condition is valid.

Configure open sensor hold off with a Field Communicator

From the *HOME* screen, enter the fast key sequence

Device Dashboard Fast Keys	2, 2, 7, 3

Configure Open Sensor Hold Off with AMS Device Manager

Right click on the device and select **Configure**.

1. In the left navigation pane choose **Manual Setup**.
2. On the **Device** Tab there will be a group box called Open Sensor Hold Off. Change the Mode to either **Normal** or **Fast**.
3. Click **Apply** when complete.

2.11 Diagnostics and service

2.11.1 Performing a loop test

The Analog **Loop Test** verifies the output of the transmitter, the integrity of the loop, and the operations of any recorders or similar devices installed in the loop. To initiate a loop test, follow the steps below.

The host system may provide a current measurement for the 4-20 mA HART output. If not, connect a reference meter to the transmitter by either connecting the meter to the test terminals on the terminal block, or shunting transmitter power through the meter at some point in the loop.

Performing a loop test with a Field Communicator

From the *HOME* screen, enter the fast key sequence

Device Dashboard Fast Keys	3, 5, 1

Performing a loop test with AMS Device Manager

Right click on the device and select **Service Tools**.

1. In the left navigation pane choose **Simulate**.
2. On the **Simulate** Tab find the **Perform Loop Test** button in the **Analog Output Verification** group box.
3. Follow the guided instructions and click **Apply** when complete.

Performing a loop test with the Local Operator Interface

Please reference the figure below to find the path to the Loop Test in the LOI menu.

Figure 2-19. Performing a Loop Test with the LOI

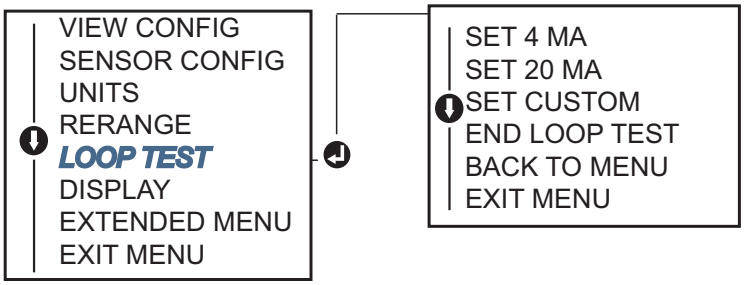

2.11.2 Simulate digital signal (Digital Loop Test)

The **Simulate Digital Signal** function adds to the analog loop test by confirming the HART output values are outputting correctly. Digital Loop Test is only available in HART Revision 7 mode.

Simulate digital signal with a Field Communicator

From the *HOME* screen, enter the fast key sequence

Device Dashboard Fast Keys	3, 5, 2

Simulate digital signal with AMS Device Manager

Right click on the device and select **Service Tools**.

1. In the left navigation window select **Simulate.**
2. In the group box labeled **Device Variables** choose the variable to simulate.
   a. Sensor 1 Temperature
   b. Sensor 2 Temperature (only available with option S)
3. Follow the screen prompts to simulate selected digital value.

Simulate digital signal with the Local Operator Interface

Please reference the figure below to find the path to the Simulate Digital Signal in the LOI menu.

Figure 2-20. Simulating the Digital Signal with LOI

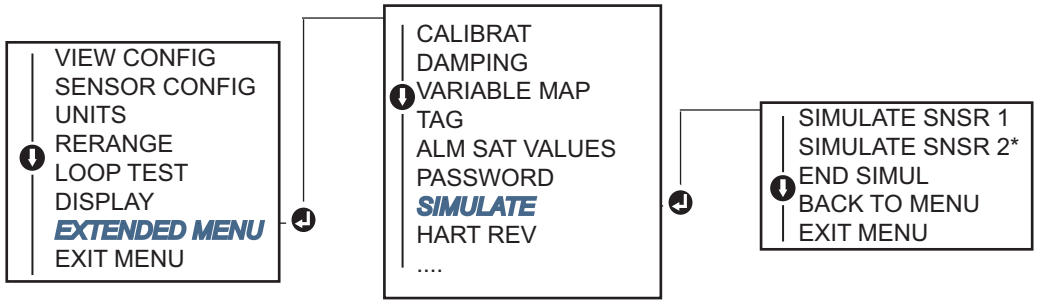

* Available only if option code (S) is ordered.

2.11.3 Thermocouple Degradation Diagnostic

Thermocouple Degradation Diagnostic acts as a gauge of the general health of the thermocouple and is indicative of any major changes in the status of the thermocouple or the thermocouple loop. The transmitter monitors the resistance of the thermocouple loop to detect drift conditions or wiring condition changes. The transmitter uses a baseline and threshold Trigger value and reports the suspected status of the thermocouple based off the difference between these values. This feature is not intended to be a precise measurement of thermocouple status, but is a general indicator of thermocouple and thermocouple loop health.

Thermocouple diagnostic must be Enabled as well as connected and configured to read a thermocouple type sensor. Once the diagnostic has been activated, a Baseline Resistance value is calculated. Then a Trigger threshold must be selected, which can be two, three, or four times the Baseline resistance, or the default of 5000 ohms. If the thermocouple loop resistance reaches the Trigger Level, a maintenance alert is generated.

⚠ CAUTION

The Thermocouple Degradation Diagnostic monitors the health of the entire thermocouple loop, including wiring, terminations, junctions, and the sensor itself. Therefore, it is imperative that the diagnostic baseline resistance be measured with the sensor fully installed and wired in the process, and not on the bench.

Note
The thermocouple resistance algorithm does not calculate resistance values while the active calibrator mode is enabled.

Configure T/C Diagnostic with a Field Communicator

From the *HOME* screen, enter the fast key sequence

Device Dashboard Fast Keys	2, 2, 4, 3, 4

Configure T/C Diagnostic with AMS Device Manager

Right click on the device and select **Configure**.

1. In the left navigation window select **Manual Setup.**
2. On the Diagnostics tab, there is a group box labeled **Sensor and Process Diagnostics**; choose the button for **Configure Thermocouple Diagnostic**.
3. Follow the screen prompts to Enable and set the values for the diagnostic.

Glossary of AMS Terms

Resistance: This is the existing resistance reading of the thermocouple loop.

Resistance Threshold Exceeded: The check box indicates if the sensor resistance has passed the Trigger Level.

Trigger Level: Threshold resistance value for the thermocouple loop. The Trigger Level may be set for 2, 3, or 4 x Baseline or the default of 5000 Ohms. If the resistance of the thermocouple loop surpasses the Trigger Level, a maintenance alert will be generated.

Baseline Resistance: The resistance of the thermocouple loop obtained after installation, or after resetting the Baseline value. The Trigger Level may be calculated from the Baseline Value.

Reset Baseline Resistance: Launches a method to recalculate the Baseline value (which may take several seconds).

TC Diagnostic Mode Sensor 1or 2: This field will read either Enabled or Disabled indicating when the Thermocouple Degradation Diagnostic is on or off for that sensor.

Configure T/C Diagnostic with the Local Operator Interface

Please reference the figure below to find the path to the Thermocouple Diagnostic in the LOI menu.

Figure 2-21. Configuring T/C Diagnostic with LOI

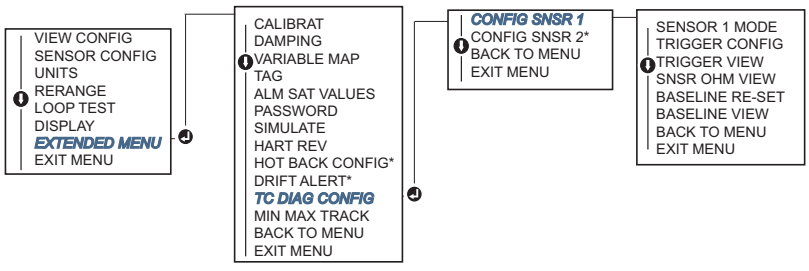

* Available only if option code (S) is ordered.

2.11.4 Minimum/Maximum tracking diagnostic

Minimum and Maximum Temperature Tracking (Min/Max Tracking) when enabled records minimum and maximum temperatures with date and time stamps on Rosemount 644 HART Head mount Temperature Transmitters. This feature records values for Sensor 1, Sensor 2, Differential, Average, First Good and Terminal temperatures. Min/Max Tracking only records temperature maxima and minima obtained since the last reset, and is not a logging function.

To track maximum and minimum temperatures, Min/Max Tracking must be enabled using a Field Communicator, AMS Device Manager, Local Operator Interface, or other communicator. While enabled, this feature allows for a reset of information at any time, and all variables can be reset simultaneously. Additionally, each of the individual parameter's minimum and maximum values may be reset individually. Once a particular field has been reset, the previous values are overwritten.

Configure min/max tracking with a Field Communicator

From the *HOME* screen, enter the fast key sequence

Device Dashboard Fast Keys	2, 2, 4, 3, 5

Configure min/max tracking with a AMS Device Manager

Right click on the device and select **Configure**.

1. In the left navigation window select **Manual Setup.**
2. On the Diagnostics tab, there is a group box labeled **Sensor and Process Diagnostics**; choose the button for **Configure Min/Max Tracking**.
3. Follow the screen prompts to Enable and configure the settings for the diagnostic.

Configure Min/Max with the Local Operator Interface

Please reference the figure below to find the path to Configure Min/Max in the LOI menu.

Figure 2-22. Configuring Min/Max Tracking with LOI

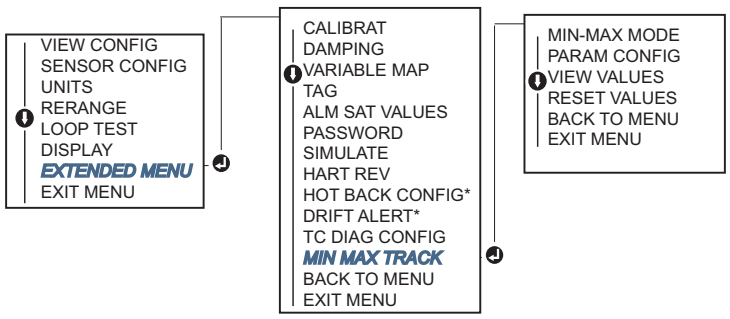

* Available only if option code (S) is ordered.

2.12 Establishing multidrop communication

Multidropping refers to the connection of several transmitters to a single communications transmission line. Communication between the host and the transmitters takes place digitally with the analog output of the transmitters deactivated.

Many Rosemount transmitters can be multidropped. With the HART communications protocol, up to 15 transmitters can be connected on a single twisted pair of wires or over leased phone lines.

A Field Communicator can test, configure, and format a multidropped 644 transmitter in the same way as in a standard point-to-point installation. The application of a multidrop installation requires consideration of the update rate necessary from each transmitter, the combination of transmitter models, and the length of the transmission line. Each transmitter is identified by a unique address (1–15) and responds to the commands defined in the HART protocol. A HART-based communicator can test, configure, and format a multidropped 644 transmitter the same as in a standard point-to-point installation.

Note
Multidrop is not suitable for safety-certified applications and installations.

Figure 2-23. Typical Multidropped Network

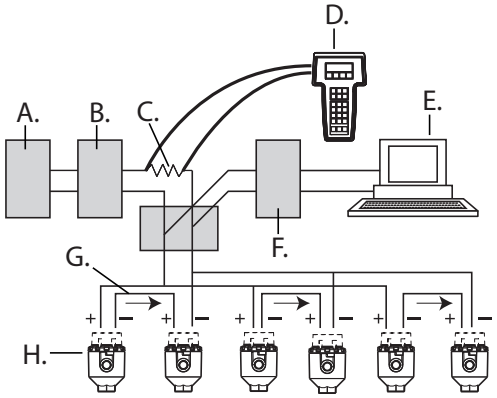

A. Power supply
B. Power supply impedance
C. 250 Ω
D. Handheld terminal
E. Computer or DCS
F. HART Interface
G. 4-20 mA
H. 644 HART transmitter

Note
644 transmitters are set to address 0 at the factory, allowing them to operate in the standard point-to-point manner with a 4–20 mA output signal. To activate multidrop communication, the transmitter address must be changed to a number between 1 and 15. This change deactivates the 4–20 mA analog output, sending it to 4 mA. The failure mode current also is disabled.

2.12.1 Changing a transmitter address

To activate multidrop communication, the transmitter poll address must be assigned a number from 1 to 15 for HART Revision 5, and 1-63 for HART Revision 7. Each transmitter in a multidropped loop must have a unique poll address.

Changing transmitter address with a Field Communicator

From the *HOME* screen, enter the fast key sequence

Device Dashboard Fast Keys	1, 2, 1

Changing transmitter address with AMS Device Manager

Right click on the device and select **Configuration Properties** from the menu.

1. In HART Revision 5 mode:
   a. In the HART tab, enter poll address into the **Polling Address** box, click **Apply**.
2. In HART Revision 7 mode:
   a. In the HART tab, click the **Change Polling Address** button.

2.13 Using the transmitter with the HART Tri-Loop

To prepare the 644 transmitter with dual-sensor option for use with a Rosemount 333 HART Tri-Loop, the transmitter must be configured to Burst Mode and the process variable output order must be set. In Burst Mode, the transmitter provides digital information for the four process variables to the HART Tri-Loop. The HART Tri-Loop divides the signal into separate 4–20 mA loops for up to three of the following choices:

- Primary Variable (PV)
- Secondary Variable (SV)
- Tertiary Variable (TV)
- Quaternary Variable (QV)

When using the 644 transmitter with dual-sensor option in conjunction with the HART Tri-Loop, consider the configuration of the differential, average, first good temperatures, Sensor Drift Alert, and Hot Backup features (if applicable).

Note
The procedures are to be used when the sensors and transmitters are connected, powered, and functioning properly. Also, a Field Communicator must be connected and communicating to the transmitter control loop. For communicator usage instructions, see "Configuring with a Field Communicator" on page 11.

2.13.1 Set the transmitter to Burst Mode

To set the transmitter to burst mode, follow the steps below with the Fast Key sequence:

Setting the Burst Mode with a Field Communicator

From the *HOME* screen, enter the fast key sequence	HART 5	HART 7
Device Dashboard Fast Keys	2, 2, 8, 4	2, 2, 8, 5

Setting the Burst Mode with AMS Device Manager

Right click on the device and select **Configure**.

1. In the left navigation window select **Manual Setup.**
2. On the **HART** tab find the Burst Mode Configuration group box and fill in the necessary content.
3. Click **Apply** when complete.

2.13.2 Set Process Variable Output Order

To set the process variable output order, follow the steps in one of the methods outlined in "Mapping the HART® Variables" on page 17.

Note
Take careful note of the process variable output order. The HART Tri-Loop must be configured to read the variables in the same order.

Special Considerations

To initiate operation between a 644 transmitter with dual-sensor option and the HART Tri-Loop, consider the configuration of both the differential, average and first good temperatures, Sensor Drift Alert, and Hot Backup features (if applicable).

Differential Temperature Measurement

To enable the differential temperature measurement feature of a dual-sensor 644 operating in conjunction with the HART Tri-Loop, adjust the range end points of the corresponding channel on the HART Tri-Loop to include zero. For example, if the secondary variable is to report the differential temperature, configure the transmitter accordingly (see "Mapping the HART® Variables" on page 17) and adjust the corresponding channel of the HART Tri-Loop so one range end point is negative and the other is positive.

Hot Backup

To enable the Hot Backup feature of a 644 transmitter with dual-sensor option operating in conjunction with the HART Tri-Loop, ensure that the output units of the sensors are the same as the units of the HART Tri-Loop. Use any combination of RTDs or thermocouples as long as the units of both match the units of the HART Tri-Loop.

Using the Tri-Loop to Detect Sensor Drift Alert

The dual-sensor 644 transmitter sets a failure flag (through HART) whenever a sensor failure occurs. If an analog warning is required, the HART Tri-Loop can be configured to produce an analog signal that can be interpreted by the control system as a sensor failure.

Use these steps to set up the HART Tri-Loop to transmit sensor failure alerts.

1. Configure the dual-sensor 644 variable map as shown.

Variable	Mapping
PV	Sensor 1 or Sensor Average
SV	Sensor 2
TV	Differential Temperature
QV	As Desired

2. Configure Channel 1 of the HART Tri-Loop as TV (differential temperature). If either sensor should fail, the differential temperature output will be +9999 or –9999 (high or low saturation), depending on the position of the Failure Mode Switch (see "Set the Alarm switch" on page 52).

3. Select temperature units for Channel 1 that match the differential temperature units of the transmitter.

4. Specify a range for the TV such as –100 to 100 °C. If the range is large, then a sensor drift of a few degrees will represent only a small percent of range. If Sensor 1 or Sensor 2 fails, the TV will be +9999 (high saturation) or –9999 (low saturation). In this example, zero is the midpoint of the TV range. If a ΔT of zero is set as the lower range limit (4 mA), then the output could saturate low if the reading from Sensor 2 exceeds the reading from Sensor 1. By placing a zero in the middle of the range, the output will normally stay near 12 mA, and the problem will be avoided.

5. Configure the DCS so that TV < –100 °C or TV > 100 °C indicates a sensor failure and, for example, TV ≤ –3 °C or TV ≥ 3 °C indicates a drift alert. See Figure 2-24.

Figure 2-24. Tracking Sensor Drift and Sensor Failure with Differential Temperature

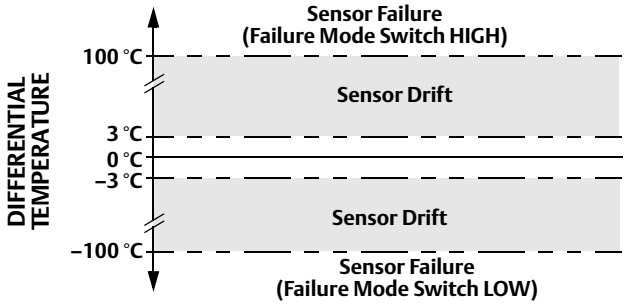

Section 3 Hardware installation

Safety Messages . . . . . page 49
Considerations . . . . . page 51
Installation procedures . . . . . page 52

Note
Each transmitter is marked with a tag indicating the approvals. Install the transmitter according to all applicable installation codes, and approval and installation drawings (see Appendix B Product Certifications). Verify that the operating atmosphere of the transmitter is consistent with the hazardous location certifications. Once a device labeled with multiple approval types is installed, it should not be reinstalled using any of the other labeled approval types. To ensure this, the approval label should be permanently marked to distinguish the approval type(s) used.

3.1 Overview

The information in this section covers installation considerations for the Rosemount 644 Temperature Transmitter with HART protocol. A Quick Installation Guide (document number 00825-0200-4728) is shipped with every transmitter to describe recommended mounting and wiring procedures for initial installation. Dimensional drawings for 644 mounting configurations are included in Appendix A: Specifications and Reference Data.

3.2 Safety Messages

Instructions and procedures in this section may require special precautions to ensure the safety of the personnel performing the operations. Information that potentially raises safety issues is indicated by a warning symbol (⚠). Please refer to the following safety messages before performing an operation preceded by this symbol.

Warnings

⚠ WARNING

Failure to follow these installation guidelines could result in death or serious injury.

- Make sure only qualified personnel perform the installation.

Explosions could result in death or serious injury.

- Do not remove the connection head cover in explosive atmospheres when the circuit is live.
- Before connecting a Field Communicator in an explosive atmosphere, make sure the instruments in the loop are installed in accordance with intrinsically safe or non-incendive field wiring practices.
- Verify that the operating atmosphere of the transmitter is consistent with the appropriate hazardous locations certifications.
- All connection head covers must be fully engaged to meet explosion-proof requirements.

Process leaks could result in death or serious injury.

- Do not remove the thermowell while in operation.
- Install and tighten thermowells and sensors before applying pressure.

Electrical shock could cause death or serious injury.

- Use extreme caution when making contact with the leads and terminals.

3.3 Considerations

3.3.1 Installation considerations

Measurement accuracy depends upon proper installation of the transmitter. Mount the transmitter close to the process and use minimum wiring to achieve best accuracy. Keep in mind the need for easy access, personnel safety, practical field calibration, and a suitable transmitter environment. Install the transmitter to minimize vibration, shock, and temperature fluctuation.

3.3.2 Environmental considerations

Best practice is to mount the transmitter in an environment that has minimal ambient temperature change. The transmitter electronics temperature operating limits are –40 to 185 °F (–40 to 85 °C). Refer to Appendix A: Specifications and Reference Data for sensing element operating limits. Mount the transmitter so that it is not susceptible to vibration and mechanical shock and does not have external contact with corrosive materials.

3.4 Installation procedures

Figure 3-1. Installation Flowchart

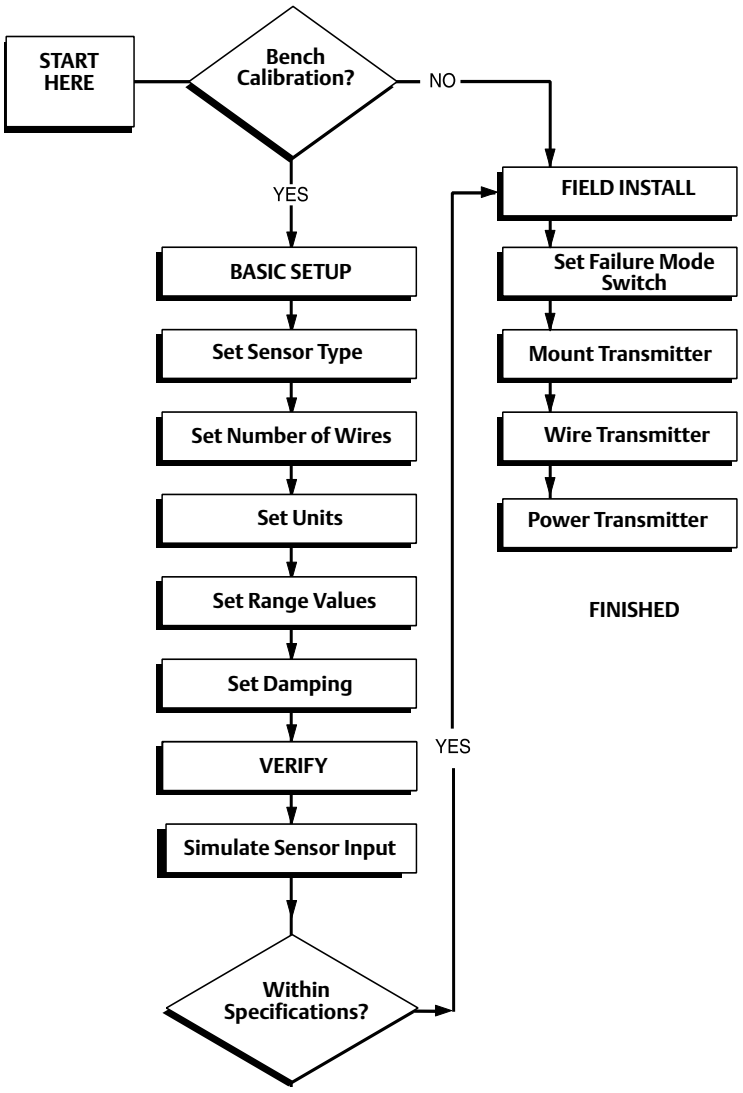

3.4.1 Set the Alarm switch

Make certain that the Alarm Switch is set to the desired position before putting the device into operation to ensure correct function in the instance of a failure.

Without a LCD Display

1. Set the loop to manual (if applicable) and disconnect the power.
2. Remove the housing cover.
3. Set the physical hardware alarm switch to the desired position. **H** indicates High, **L** indicates Low. Then reattach the housing cover. Please see Figure 3-2 below for alarm switch location.
4. Apply power and set the loop to automatic control.

Figure 3-2. Failure switch location

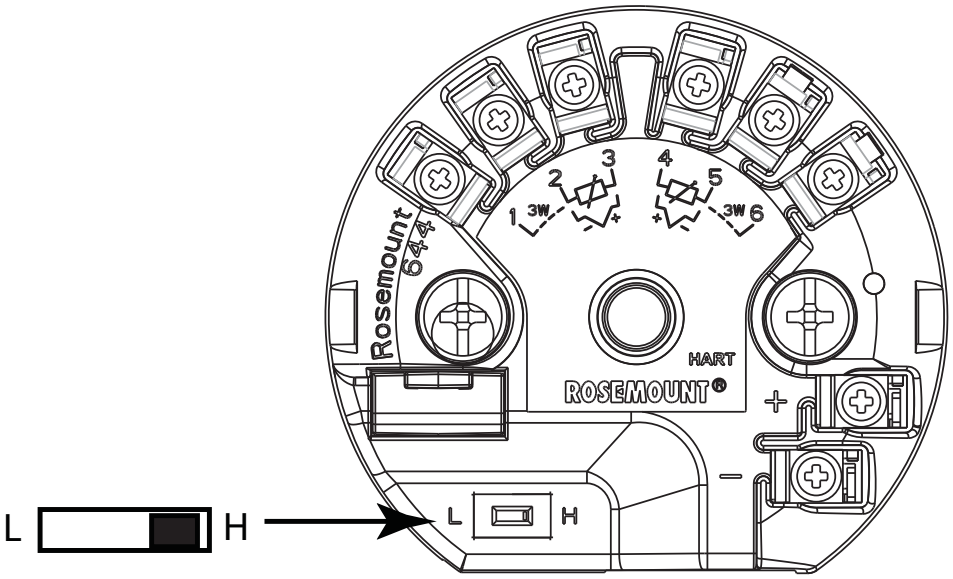

Note
If using an LCD Display or Local Operator Interface, first remove the display by detaching it from the top of the 644 device, set the switch to the desired position and reattach the display. See Figure 3-3. Display Connection for proper display orientation.

Figure 3-3. Display connection

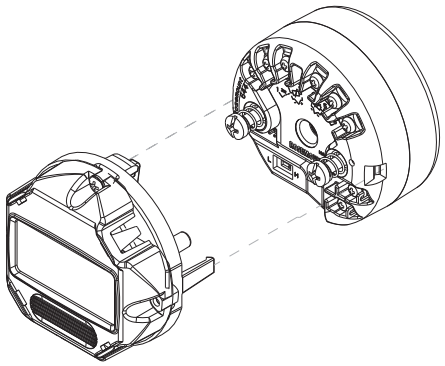

3.4.2 Mount the transmitter

Mount the transmitter at a high point in the conduit run to prevent moisture from draining into the transmitter housing.

The 644 head mount installs

- In a connection head or universal head mounted directly on a sensor assembly.
- Apart from a sensor assembly using a universal head.
- To a DIN rail using an optional mounting clip.

The 644 rail mount attaches directly to a wall or to a DIN rail.

Mounting a 644 to a DIN Rail

To attach a head mount transmitter to a DIN rail, assemble the appropriate rail mounting kit (part number 00644-5301-0010) to the transmitter as shown in Figure 3-4. Follow the procedure under "Rail Mount Transmitter and Sensor".

Figure 3-4. Assembling Rail Clip Hardware to a 644

G-Rail (asymmetric)	Top Hat Rail (symmetric)
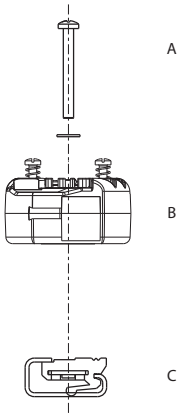	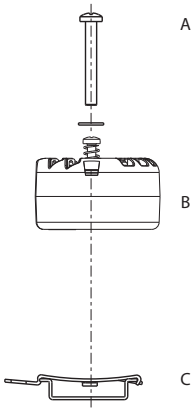

Note: Kit (part number 00644-5301-0010) includes mounting hardware and both types of rail kits.

A. Mounting hardware
B. Transmitter
C. Railclip

3.4.3 Install the device

Typical connection head installation

Head Mount Transmitter with DIN Plate Style Sensor

⚠ 1. Attach the thermowell to the pipe or process container wall. Install and tighten the thermowell before applying process pressure.

2. Verify the transmitter failure mode switch position.

3. Assemble the transmitter to the sensor(1). Push the transmitter mounting screws through the sensor mounting plate.

4. Wire the sensor to the transmitter (see "Wiring and powering the transmitter" on page 64).

5. Insert the transmitter-sensor assembly into the connection head. Thread the transmitter mounting screw into the connection head mounting holes. Assemble the extension to the connection head by tightening the threaded connections of the extension to the housing. Insert the assembly into the thermowell and tighten the threaded connections.

6. If using a cable gland for power wiring, properly attach the cable gland to a housing conduit entry.

7. Insert the shielded cable leads into the connection head through the conduit entry.

⚠ 8. Connect the shielded power cable leads to the transmitter power terminals. Avoid contact with sensor leads and sensor connections. Connect and tighten the cable gland.

⚠ 9. Install and tighten the connection head cover. Enclosure covers must be fully engaged to meet explosion-proof requirements.

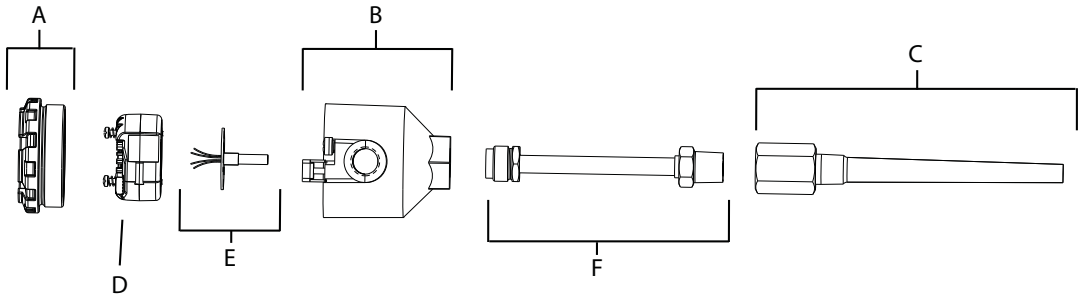

A = Connection Head cover
B = Connection Head
C = Thermowell
D = 644 Transmitter
E = Integral Mount Sensor with Flying Leads
F = Extension

(1) If using a Threaded type sensor with a connection head, Please reference steps 1-6 below in "Head Mount Transmitter with Threaded Sensor" on page 56.

Typical Universal Head Installation

Head Mount Transmitter with Threaded Sensor

⚠ 1. Attach the thermowell to the pipe or process container wall. Install and tighten thermowells before applying process pressure.

2. Attach necessary extension nipples and adapters to the thermowell. Seal the nipple and adapter threads with silicone tape.

3. Screw the sensor into the thermowell. Install drain seals if required for severe environments or to satisfy code requirements.

4. Verify the transmitter failure mode switch is in the desired position.

5. To verify the correct installation of Integral Transient Protection (option code T1) on the Rosemount 644 device, confirm the following steps have been completed:

   a. Ensure the transient protector unit is firmly connected to the transmitter puck assembly.

   b. Ensure the transient protector power leads are adequately secured under the transmitter power terminal screws.

   c. Verify the transient protector's ground wire is secured to the internal ground screw found within the universal head.

Note
The transient protector requires the use of an enclosure of at least 3.5 in (89 mm) in diameter.

6. Pull the sensor wiring leads through the universal head and transmitter. Mount the transmitter in the universal head by threading the transmitter mounting screws into the universal head mounting holes.

7. Seal adapter threads with thread sealant.

8. Pull the field wiring leads through the conduit into the universal head. Wire the sensor and power leads to the transmitter (see "Wiring and powering the transmitter" on page 64). Avoid contact with other terminals.

⚠ 9. Install and tighten the universal head cover. Enclosure covers must be fully engaged to meet explosion-proof requirements.

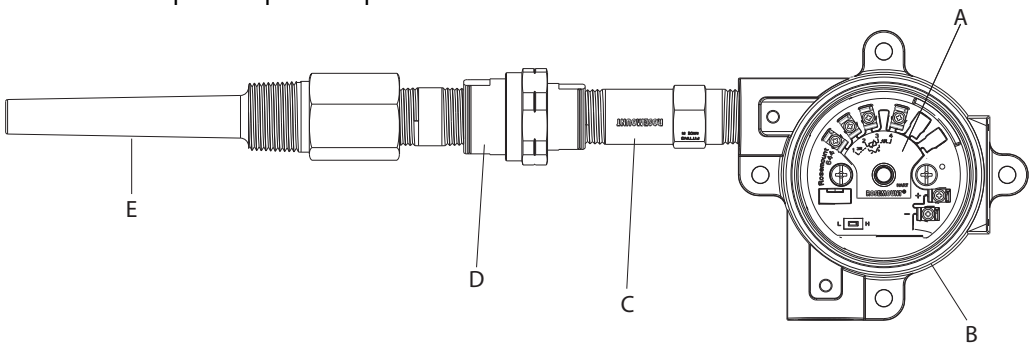

A = 644 Transmitter	D = Extension
B = Universal Junction Box	E = Threaded Thermowell
C = Threaded Style Sensor	

Rail Mount Transmitter and Sensor

⚠ 1. Attach the transmitter to a suitable rail or panel.

2. Attach the thermowell to the pipe or process container wall. Install and tighten the thermowell, according to plant standards, before applying pressure.

3. Attach the sensor to the connection head and mount the entire assembly to the thermowell.

4. Attach and connect sufficient lengths of sensor lead wire from the connection head to the sensor terminal block.

⚠ 5. Tighten the connection head cover. Enclosure covers must be fully engaged to meet explosion-proof requirements.

6. Run sensor lead wires from the sensor assembly to the transmitter.

7. Verify the transmitter failure mode switch.

⚠ 8. Attach the sensor wires to the transmitter.

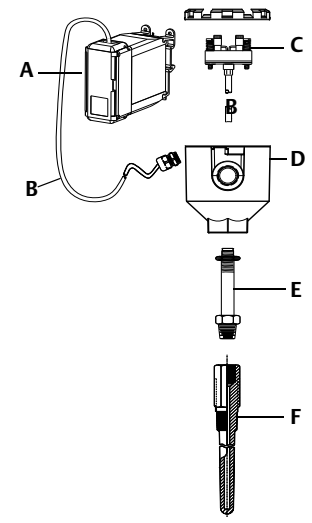

A = Rail Mount Transmitter
B = Sensor Leads with Cable Glands
C = Integral Mount Sensor with Terminal Block
D = Connection Head
E = Standard Extension
F = Threaded Thermowell

Rail Mount Transmitter with Threaded Sensor

⚠ 1. Attach the transmitter to a suitable rail or panel.

2. Attach the thermowell to the pipe or process container wall. Install and tighten the thermowell before applying pressure.

3. Attach necessary extension nipples and adapters. Seal the nipple and adapter threads with thread sealant.

4. Screw the sensor into the thermowell. Install drain seals if required for severe environments or to satisfy code requirements.

5. Screw the connection head to the sensor.

6. Attach the sensor lead wires to the connection head terminals.

7. Attach additional sensor lead wires from the connection head to the transmitter.

⚠ 8. Attach and tighten the connection head cover. Enclosure covers must be fully engaged to meet explosion-proof requirements.

9. Set the transmitter failure mode switch.

⚠ 10. Attach the sensor wires to the transmitter.

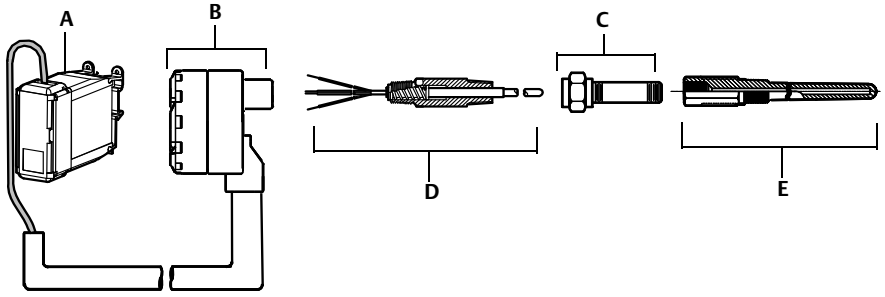

A = Rail Mount Transmitter	C = Standard Extension
B = Threaded Sensor Connection Head	D = Threaded Style Sensor
	E = Threaded Thermowell

3.4.4 Multichannel installations

In a HART installation, several transmitters can be connected to a single master power supply, as shown in Figure 3-5. In this case, the system may be grounded only at the negative power supply terminal. In multichannel installations where several transmitters depend on one power supply and the loss of all transmitters would cause operational problems, consider an uninterrupted power supply or a back-up battery. The diodes shown in Figure 3-5 prevent unwanted charging or discharging of the back-up battery.

Figure 3-5. Multichannel Installations

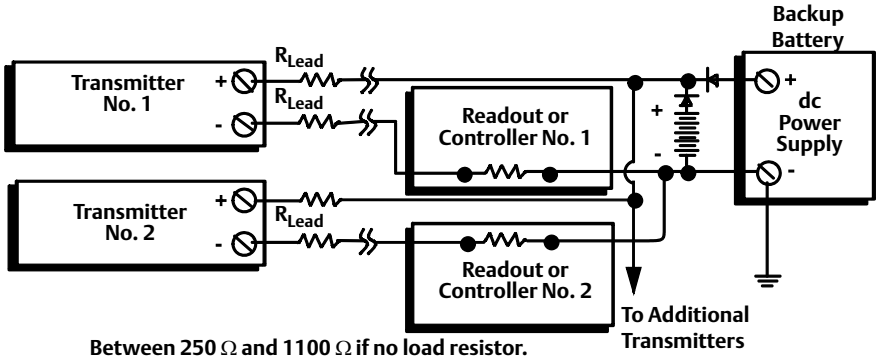

3.4.5 LCD Display Installation

The LCD display provides local indication of the transmitter output and abbreviated diagnostic messages governing transmitter operation. Transmitters ordered with the LCD display are shipped with the meter installed. After-market installation of the meter can be performed. After-market installation requires the meter kit (part number 00644-7630-0011), which includes:

- LCD display assembly (includes LCD display, meter spacer, and 2 screws)
- Meter cover with O-ring in place

Figure 3-6. Installing the LCD Display

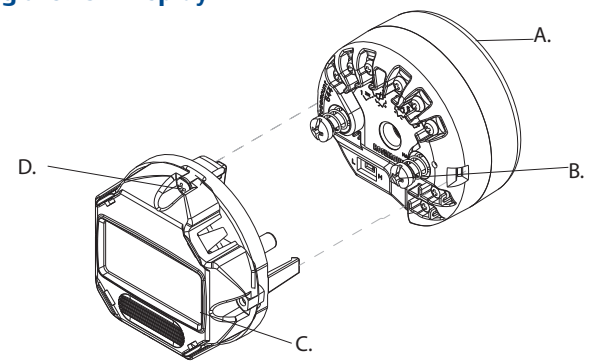

A. 644 Transmitter
B. Mounting Screws and springs
C. LCD Display
D. LCD Rotation Screws

Use the following procedure to install the meter.

1. If the transmitter is installed in a loop, secure the loop and disconnect the power. If the transmitter is installed in an enclosure, remove the cover from the enclosure.
2. Decide meter orientation (the meter can be rotated in 90° increments). To change meter orientation, remove the screws located above and below the display screen. Lift the meter off the meter spacer. Rotate the display top and re-insert it in the location that will result in the desired viewing orientation.
3. Reattach the meter to the meter spacer using the screws. If the meter was rotated 90° from its original position it will be necessary to remove the screws from their original holes and re-insert them in the adjacent screws holes.
4. Line up the connector with the pin socket and push the meter into the transmitter until it snaps into place.
5. Attach the meter cover. The cover must be fully engaged to meet explosion-proof requirements.
6. Use a Field Communicator, AMS software tool to configure the meter to the desired display. Refer to "LCD Meter Options (644H Only)" for information on configuring the LCD display.

Note
Observe the following LCD display temperature limits:
Operating: –4 to 185 °F (–20 to 85 °C)
Storage: –50 to 185 °F (–45 to 85 °C)

Section 4 Electrical Installation

Overview . . . . . page 61
Safety Messages . . . . . page 61
Wiring and powering the transmitter . . . . . page 62

4.1 Overview

The information in this section covers installation considerations for the Rosemount 644. A Quick Installation Guide is shipped with every transmitter to describe mounting, wiring, and basic configuration procedures for initial installation.

4.2 Safety Messages

Instructions and procedures in this section may require special precautions to ensure the safety of the personnel performing the operations. Information that potentially raises safety issues is indicated by a warning symbol (⚠). Please refer to the following safety messages before performing an operation preceded by this symbol.

Warnings

⚠ WARNING

Explosions could result in death or serious injury:

Installation of this transmitter in an explosive environment must be in accordance with the appropriate local, national, and international standards, codes, and practices. Please review the approvals section of the this manual for any restrictions associated with a safe installation.

- In an Explosion-Proof/Flameproof installation, do not remove the transmitter covers when power is applied to the unit.

Process leaks may cause harm or result in death.

- Install and tighten process connectors before applying pressure.

Electrical shock can result in death or serious injury.

- Avoid contact with the leads and terminals. High voltage that may be present on leads can cause electrical shock.

4.3 Wiring and powering the transmitter

All power to the transmitter is supplied over the signal wiring. Use ordinary copper wire of sufficient size to ensure that the voltage across the transmitter power terminals does not drop below 12.0 Vdc.

If the sensor is installed in a high-voltage environment and a fault condition or installation error occurs, the sensor leads and transmitter terminals could carry lethal voltages. Use extreme caution when making contact with the leads and terminals.

Note
Do not apply high voltage (e.g., ac line voltage) to the transmitter terminals. Abnormally high voltage can damage the unit. (Sensor and transmitter power terminals are rated to 42.4 Vdc. A constant 42.4 volts across the sensor terminals may damage the unit.)

For multichannel HART installations, see above. The transmitters will accept inputs from a variety of RTD and thermocouple types. Refer to Figure 2-6 on page 19 when making sensor connections.

The sensor Wiring Diagram is located on the device's top label below the terminal screws. See Figure 4-1 and Figure 4-2 for where to find and how to correctly wire all sensor types to the 644 transmitter.

Figure 4-1. Wiring Diagram Location

644H – Single Input	644S – Dual Inputs
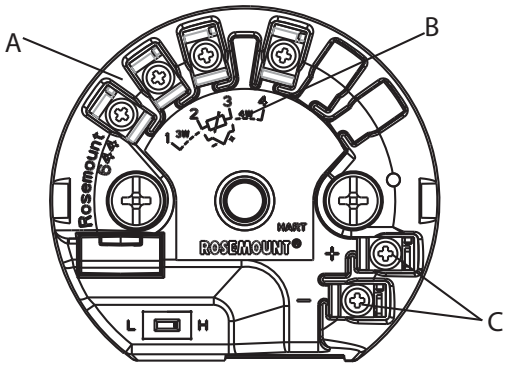	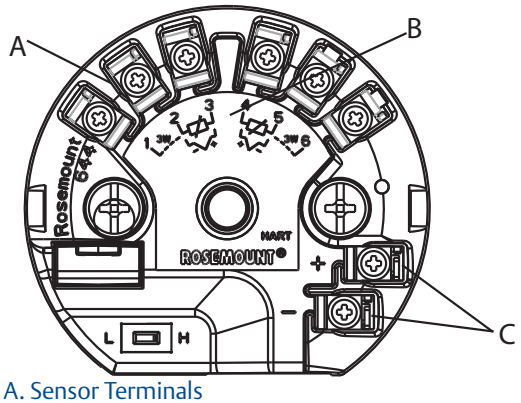
A. Sensor Terminals B. Single Input Wiring Diagram C. Power Terminals	A. Sensor Terminals B. Dual Input Wiring Diagram C. Power Terminals

4.3.1 Sensor connections

⚠ The 644 is compatible with a number of RTD and thermocouple sensor types. Figure 2-8 shows the correct input connections to the sensor terminals on the transmitter. To ensure a proper sensor connection, anchor the sensor lead wires into the appropriate captive terminals and tighten the screws.

Figure 4-2. Sensor Wiring Diagrams

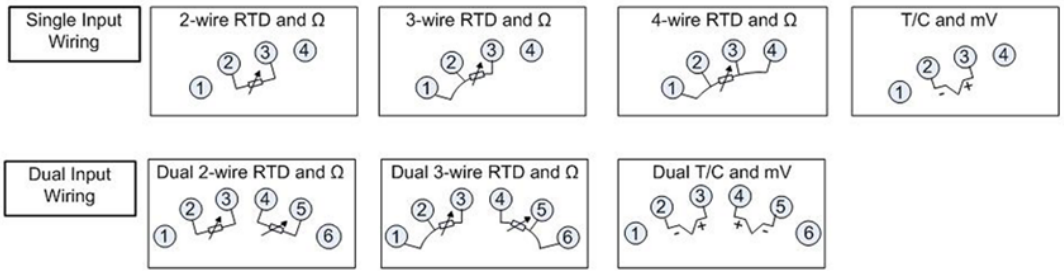

**The transmitter must be configured for at least a 3-wire RTD in order to recognize an RTD with a compensation loop.*
*** Rosemount Inc. provides a 4-wire sensors for all single element RTDs. Use these RTDs in 3-wire configurations by leaving the unneeded leads disconnected and insulated with electrical tape.*

Thermocouple or Millivolt Inputs

The thermocouple can be connected directly to the transmitter. Use appropriate thermocouple extension wire if mounting the transmitter remotely from the sensor. Make millivolt inputs connections with copper wire. Use shielding for long runs of wire.

RTD or Ohm Inputs

The transmitters will accept a variety of RTD configurations, including 2-wire, 3-wire or 4-wire. If the transmitter is mounted remotely from a 3-wire or 4-wire RTD, it will operate within specifications, without recalibration, for lead wire resistances of up to 60 ohms per lead (equivalent to 6,000 feet of 20 AWG wire). In this case, the leads between the RTD and transmitter should be shielded. If using only two leads, both RTD leads are in series with the sensor element, so significant errors can occur if the lead lengths exceed three feet of 20 AWG wire (approximately 0.05 °C/ft). For longer runs, attach a third or fourth lead as described above.

Sensor Lead Wire Resistance Effect– RTD Input

When using a 4-wire RTD, the effect of lead resistance is eliminated and has no impact on accuracy. However, a 3-wire sensor will not fully cancel lead resistance error because it cannot compensate for imbalances in resistance between the lead wires. Using the same type of wire on all three lead wires will make a 3-wire RTD installation as accurate as possible. A 2-wire sensor will produce the largest error because it directly adds the lead wire resistance to the sensor resistance. For 2- and 3-wire RTDs, an additional lead wire resistance error is induced with ambient temperature variations. The table and the examples shown below help quantify these errors.

Note
For HART transmitters, the use of two grounded thermocouples with a dual option Rosemount 644 transmitter is not recommended. For applications in which the use of two thermocouples is desired, connect either two ungrounded thermocouples, one grounded and one ungrounded thermocouple, or one dual element thermocouple.

4.3.2 Power the transmitter

1. An external power supply is required to operate the transmitter.
2. Remove the housing cover (if applicable).
3. Connect the positive power lead to the "+" terminal. Connect the negative power lead to the "–" terminal.
   - If a transient protector is being used, the power leads will now be connected to the top of the transient protector unit. See the transient label for indication of "+" and "-" terminal connections.
4. Tighten the terminal screws. When tightening the sensor and power wires, the max torque is 6.5 in.-lbs (0.73 N-m).
5. Reattach and tighten the cover (if applicable).
6. Apply power (12 – 42 Vdc).

644 (DIN A Head Mount)

HART device shown with captivated screw terminals

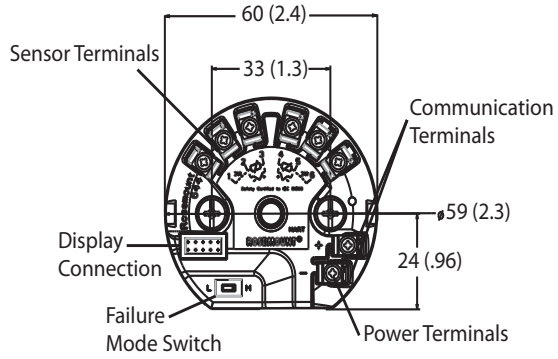

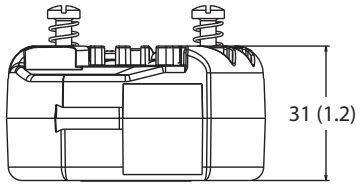

Dimensions are in millimeters (inches)

644 Rail Mount

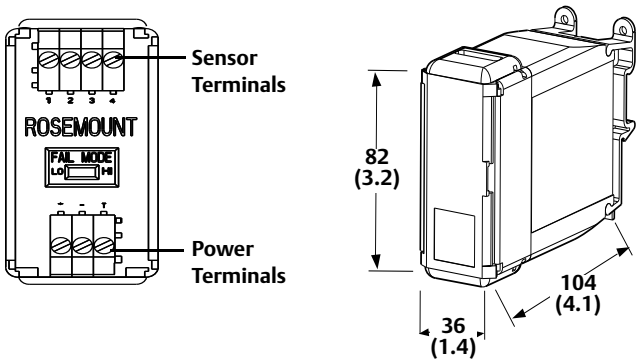

Figure 4-3. Powering the transmitter for Bench Configuration

644 Head mount	644 Rail mount
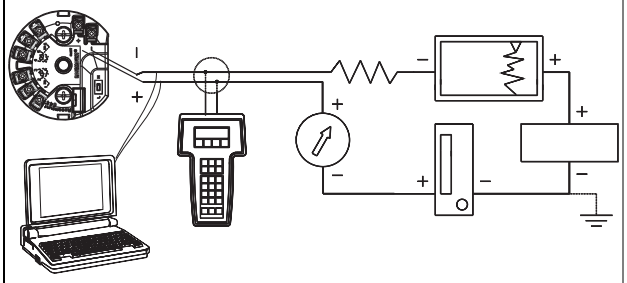	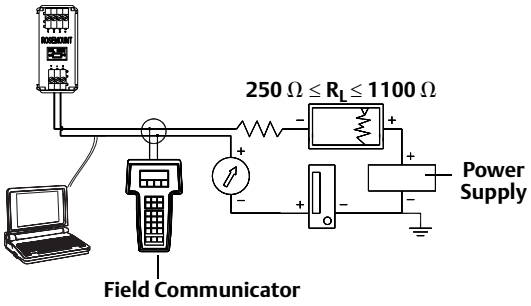

Note: Signal loop may be grounded at any point or left ungrounded.
Note: A Field Communicator may be connected at any termination point in the signal loop. The signal loop must have between 250 and 1100 ohms load for communications.
Note: Max torque is 6 in.-lbs (0/7 N-m)

Load limitation

The power required across the transmitter power terminals is 12 to 42.4 Vdc (the power terminals are rated to 42.4 Vdc). To prevent damaging the transmitter, do not allow terminal voltage to drop below 12.0 Vdc when changing the configuration parameters.

4.3.3 Ground the transmitter

Sensor Shielding

The currents in the leads induced by electromagnetic interference can be reduced by shielding. Shielding carries the current to ground and away from the leads and electronics. If the ends of the shields are adequately grounded, only a small amount of current will actually enter the transmitter. If the ends of the shield are left ungrounded, voltage is created between the shield and the transmitter housing and also between the shield and earth at the element end. The transmitter may not be able to compensate for this voltage, causing it to lose communication and/or go into alarm. Instead of the shield carrying the currents away from the transmitter, the currents will now flow through the sensor leads into the transmitter circuitry where it will interfere with the circuit operation.

Shielding Recommendations

The following are recommended practices from API Standard 552 (Transmission Standard) section 20.7, and from field and laboratory testing. If more than one recommendation is given for a sensor type, start with the first technique shown or the technique that is recommended for the facility by its installation drawings. If the technique does not eliminate the transmitter alarms, try another technique. If all of the techniques do not eliminate or prevent the transmitter alarms because of high EMI, contact an Emerson Process Management representative.

To ensure proper grounding, it is important that the instrument cable shield be:

- Trimmed close and insulated from touching the transmitter housing
- Connected to the next shield if cable is routed through a junction box
- Connected to a good earth ground at the power supply end

Ungrounded Thermocouple, mV, and RTD/Ohm Inputs

Each process installation has different requirements for grounding. Use the grounding options recommended by the facility for the specific sensor type, or begin with grounding **Option 1:** (the most common).

Option 1:

1. Connect sensor wiring shield to the transmitter housing.
2. Ensure the sensor shield is electrically isolated from surrounding fixtures that may be grounded.
3. Ground signal wiring shield at the power supply end.

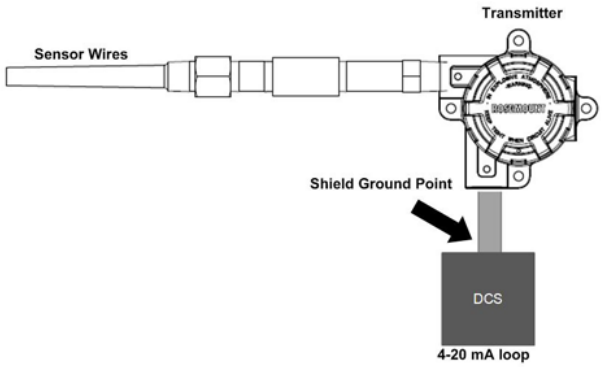

Option 2:

1. Connect signal wiring shield to the sensor wiring shield.
2. Ensure the two shields are tied together and electrically isolated from the transmitter housing.
3. Ground shield at the power supply end only.
4. Ensure that the sensor shield is electrically isolated from the surrounding grounded fixtures.

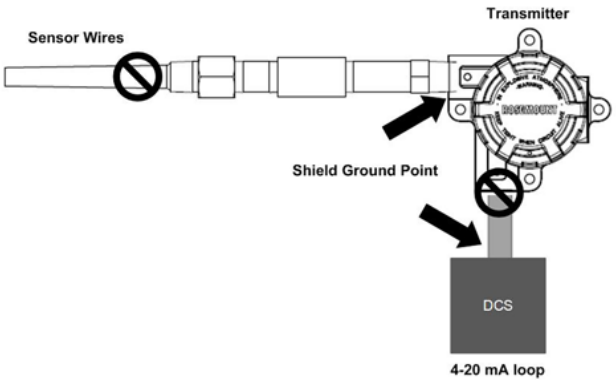

Connect shields together, electrically isolated from the transmitter.

Option 3:

1. Ground sensor wiring shield at the sensor, if possible.
2. Ensure that the sensor wiring and signal wiring shields are electrically isolated from the transmitter housing.
3. Do not connect the signal wiring shield to the sensor wiring shield.
4. Ground signal wiring shield at the power supply end.

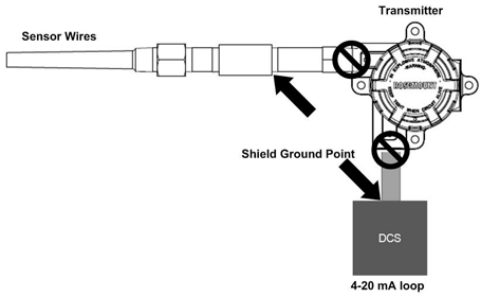

Grounded thermocouple inputs

Option 1:

1. Ground sensor wiring shield at the sensor.
2. Ensure that the sensor wiring and signal wiring shields are electrically isolated from the transmitter housing.
3. Do not connect the signal wiring shield to the sensor wiring shield.
4. Ground signal wiring shield at the power supply end.

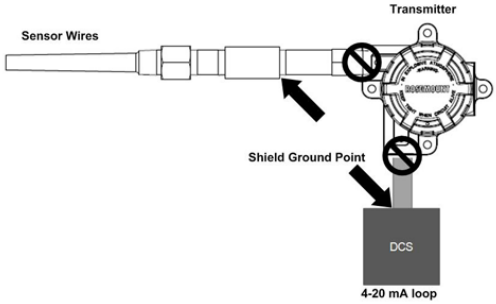

4.3.4 Wiring with a Rosemount 333 HART Tri-Loop (HART / 4–20 mA only)

Use the dual-sensor option 644 transmitter that is operating with two sensors in conjunction with a 333 HART Tri-Loop® HART-to-Analog Signal Converter to acquire an independent 4–20 mA analog output signal for each sensor input. The 644 transmitter can be configured to output four of the six following digital process variables:

- Sensor 1
- Sensor 2
- Differential temperature
- Average temperature
- First good temperature
- Transmitter terminal temperature

The HART Tri-Loop reads the digital signal and outputs any or all of these variables into as many as three separate 4–20 mA analog channels. Refer to Figure 2-6 on page 19 for basic installation information. Refer to the 333 HART Tri-Loop HART-to-Analog Signal Converter Reference Manual (document number 00809-0100-4754) for complete installation information.

Power supply

An external power supply is required to operate the 644 and is not included. The input voltage range of the transmitter is 12 to 42.4 Vdc. This is the power required across the transmitter power terminals. The power terminals are rated to 42.4 Vdc. With 250 ohms of resistance in the loop, the transmitter requires a minimum of 18.1 Vdc for communication.

The power supplied to the transmitter is determined by the total loop resistance and should not drop below the lift-off voltage. The lift-off voltage is the minimum supply voltage required for any given total loop resistance. If the power drops below the lift-off voltage while the transmitter is being configured, the transmitter may output incorrect information.

The DC power supply should provide power with less than 2% ripple. The total resistance load is the sum of the resistance of the signal leads and the load resistance of any controller, indicator, or related piece of equipment in the loop. Note that the resistance of intrinsic safety barriers, if used, must be included.

Note
Permanent damage to the transmitter could result if the voltage drops below 12.0 Vdc at the power terminals, when changing transmitter configuration parameters.

Figure 4-4. Load limits

Maximum Load = 40.8 X (Supply Voltage - 12.0)

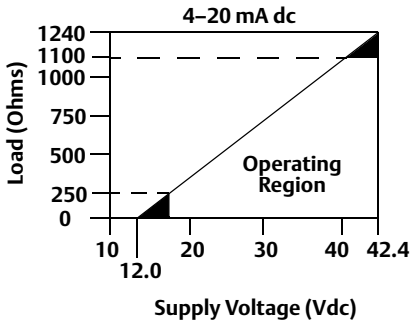

Section 5 Operation and maintenance

Overview ..... page 71
Safety messages ..... page 71
Calibration overview ..... page 72
Sensor input trim ..... page 73
Trim the analog output ..... page 76
Transmitter-Sensor Matching ..... page 78
Switching HART Revision ..... page 80

5.1 Overview

This section contains information on calibrating Rosemount 644 Temperature Transmitter. Field Communicator, AMS, and Local Operator Interface (LOI) instructions are given to perform all functions.

5.2 Safety messages

Instructions and procedures in this section may require special precautions to ensure the safety of the personnel performing the operations. Information that potentially raises safety issues is indicated by a warning symbol (⚠). Please refer to the following safety messages before performing an operation preceded by this symbol.

Warnings

⚠ WARNING

Failure to follow these installation guidelines could result in death or serious injury.

- Make sure only qualified personnel perform the installation.

Explosions could result in death or serious injury.

- Do not remove the connection head cover in explosive atmospheres when the circuit is live.
- Before connecting a Field Communicator in an explosive atmosphere, make sure the instruments in the loop are installed in accordance with intrinsically safe or non-incendive field wiring practices.
- Verify that the operating atmosphere of the transmitter is consistent with the appropriate hazardous locations certifications.
- All connection head covers must be fully engaged to meet explosion-proof requirements.

Process leaks could result in death or serious injury.

- Do not remove the thermowell while in operation.
- Install and tighten thermowells and sensors before applying pressure.

Electrical shock could cause death or serious injury.

- Use extreme caution when making contact with the leads and terminals.

5.3 Calibration overview

Calibrating the transmitter increases the measurement precision by allowing corrections to be made to the factory-stored characterization curve by digitally altering the transmitter's interpretation of the sensor input.

To understand calibration, it is necessary to understand that smart transmitters operate differently from analog transmitters. An important difference is that smart transmitters are factory-characterized, meaning that they are shipped with a standard sensor curve stored in the transmitter firmware. In operation, the transmitter uses this information to produce a process variable output, in engineering units, dependent on the sensor input.

Calibration of the 644 may include the following procedures:

- **Sensor Input Trim**: digitally alter the transmitter's interpretation of the input signal
- **Transmitter Sensor Matching**: generates a special custom curve to match that specific sensor curve, as derived from the Callendar-Van Dusen constants
- **Output Trim**: calibrates the transmitter to a 4–20 mA reference scale
- **Scaled Output Trim**: calibrates the transmitter to a user-selectable reference scale.

5.3.1 Trimming

The trim functions should not be confused with the rerange functions. Although the rerange command matches a sensor input to a 4–20 mA output—as in conventional calibration—it does not affect the transmitter's interpretation of the input.

One or more of the trim functions may be used when calibrating. The trim functions are as follows:

- Sensor Input Trim
- Transmitter-Sensor Matching
- Output Trim
- Output Scaled Trim

5.4 Sensor input trim

The Sensor Trim command allows for alteration of the transmitter's interpretation of the input signal. The sensor trim command trims, in engineering (°F, °C, °R, K) or raw (ohms, mV) units, the combined sensor and transmitter system to a site standard using a known temperature source. Sensor trim is suitable for validation procedures or for applications that require profiling the sensor and transmitter together.

Perform a sensor trim if the transmitter's digital value for the primary variable does not match the plant's standard calibration equipment. The sensor trim function calibrates the sensor to the transmitter in temperature units or raw units. Unless the site-standard input source is NIST-traceable, the trim functions will not maintain the NIST-traceability of your system.

Figure 5-1. Trim

Application: Linear Offset

Solution: Single-Point Trim

Method:

1. Connect sensor to transmitter. Place sensor in bath between range points.
2. Enter known bath temperature using the Field Communicator.

Application: Linear Offset and Slope Correction

Solution: Two-Point Trim

Method:

1. Connect sensor to transmitter. Place sensor in bath at low range point.
2. Enter known bath temperature using the Field Communicator.
3. Repeat at high range point.

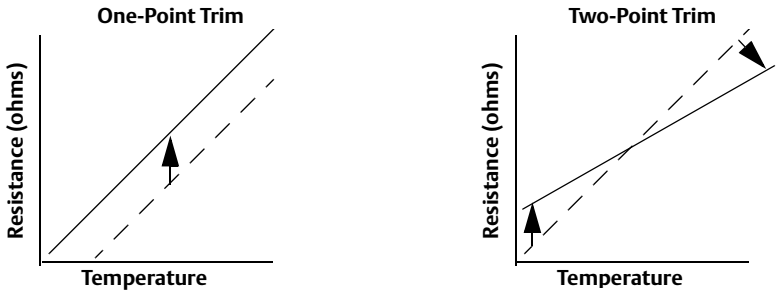

Use the following procedures to perform a sensor trim on the 644:

Performing a Sensor Trim using a Field Communicator

1. Connect the calibration device or sensor to the transmitter. (If using an active calibrator, please see "Active Calibrator and EMF Compensation" on page 75)

2. Connect the communicator to the transmitter loop.

From the *HOME* screen, enter the fast key sequence

Device Dashboard Fast Keys	3, 4, 4, 1

The communicator will ask "Are you using an active calibrator?"

a. Select "**No**" if a sensor is connected to the transmitter

b. Select "**Yes**" if using a calibration device. By selecting yes, the transmitter will switch into active calibration mode (see "Active Calibrator and EMF Compensation"). This is critical if the calibrator requires constant sensor current for calibration. If using a calibration device that can accept pulsed current, select "No."

Performing a Sensor Trim using AMS Device Manager

1. Right click on the device and select **Overview**.

2. On the main Overview tab, click on the **Calibrate Sensor(s)** button near the bottom of the window.

3. Follow the screen prompts that will guide you through the Sensor Trimming process.

Performing a Sensor Trim using the Local Operator Interface

Reference the below image for guidance on where to find Sensor Calibration in the LOI menu.

Figure 5-2. Trimming the sensor with the LOI

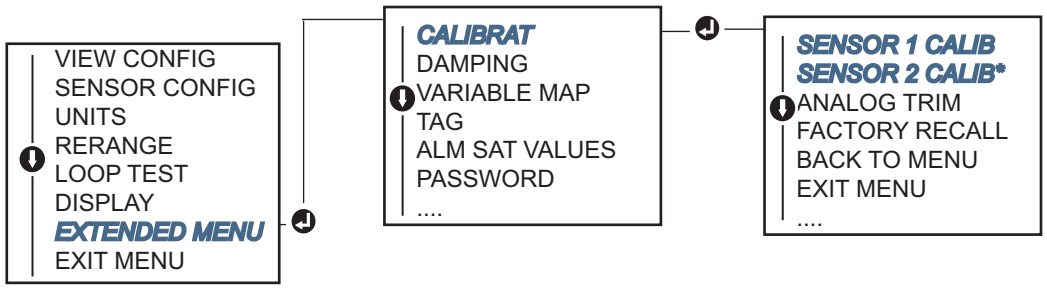

5.4.1 Recall Factory Trim—Sensor trim

The Recall Factory Trim—Sensor Trim feature allows the restoration of the as-shipped factory settings of the analog output trim. This command can be useful for recovering from an inadvertent trim, incorrect Plant Standard or faulty meter.

Recall Factory Trim – Sensor, using a Field Communicator

From the *HOME* screen, enter the fast key sequence and follow the steps within the Field Communicator to complete the Sensor Trim.

Device Dashboard Fast Keys	3, 4, 4, 2

Recall Factory Trim – Sensor, using AMS Device Manager

1. Right click on the device and select **Service Tools**.
2. On the Sensor Calibration tab, click on the **Restore Factory Calibration**.
3. Follow the screen prompts that will guide you through the restoring of the calibration settings.

Recall Factory Trim – Sensor, using the Local Operator Interface

Reference the below image for where to find Recall Sensor Trim in the LOI menu.

Figure 5-3. Recalling the Sensor Trim with the LOI

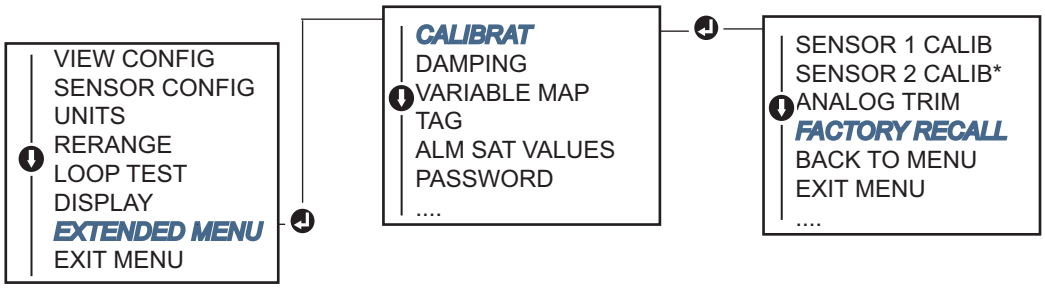

5.4.2 Active Calibrator and EMF Compensation

The transmitter operates with a pulsating sensor current to allow EMF compensation and detection of open sensor conditions. Because some calibration equipment requires a steady sensor current to function properly, the “Active Calibrator Mode” feature should be used when an Active Calibrator is connected. Enabling this mode temporarily sets the transmitter to provide steady sensor current unless two sensor inputs are configured.

Disable this mode before putting the transmitter back into the process to set the transmitter back to pulsating current. “Active Calibrator Mode” is volatile and will automatically be disabled when a Master Reset is performed (through HART) or when the power is cycled.

EMF compensation allows the transmitter to provide sensor measurements that are unaffected by unwanted voltages, typically due to thermal EMFs in the equipment connected to the transmitter, or by some types of calibration equipment. If this equipment also requires steady sensor current, the transmitter must be set to “Active Calibrator Mode.” However, the steady current does not allow the transmitter to perform EMF compensation and as a result, a difference in readings between the Active Calibrator and actual sensor may exist.

If a reading difference is experienced and is greater than the plant’s accuracy specification allows, perform a sensor trim with “Active Calibrator Mode” disabled. In this case, an active calibrator capable of tolerating pulsating sensor current must be used or the actual sensors must be connected to the transmitter. When the Field Communicator, AMS or the LOI asks if an Active Calibrator is being used when the sensor trim routine is entered, select **No** to leave the “Active Calibrator Mode” disabled.

5.5 Trim the analog output

5.5.1 Analog output trim or Scaled Analog Output Trim

Perform an Output Trim or a Scaled Output Trim if the digital value for the primary variable matches the plant’s standards but the transmitter’s analog output does not match the reading on the output device. The output trim function calibrates the transmitter to a 4–20 mA reference scale; the scaled output trim function calibrates to a user-selectable reference scale. To determine the need for an output trim or a scaled output trim, perform a loop test (“Performing a loop test” on page 39).

Figure 5-4. Measurement Dynamics of a Smart Temperature transmitter

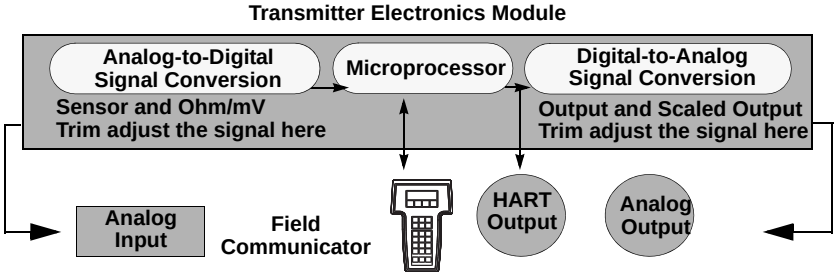

5.5.2 Analog output trim

The *Analog Output Trim* allows the transmitter’s conversion of the input signal to a 4–20 mA output to be altered (Figure 5-4). Adjust the analog output signal at regular intervals to maintain measurement precision. To perform a digital-to-analog trim, perform the following procedure with Traditional Fast Key sequence:

Performing a Analog Output Trim using a Field Communicator

1. Connect an accurate reference meter to the transmitter at the **CONNECT REFERENCE METER** prompt by shunting the power to the transmitter through the reference meter at some point in the loop.

From the *HOME* screen, enter the fast key sequence

Device Dashboard Fast Keys	3, 4, 5, 1

Performing a Analog Output Trim using AMS Device Manager

1. Right click on the device and select **Service Tools**.
2. In the left navigation pane click on **Maintenance**.
3. Find the **Analog Calibration** tab and click on the **Analog Trim** button.
4. Follow the screen prompts that will guide you through the Analog Trimming process.

Performing an Analog Output Trim using the Local Operator Interface

Reference the below image for guidance on where to find Analog Trim in the LOI menu.

Figure 5-5. Trimming the Analog Output with the LOI

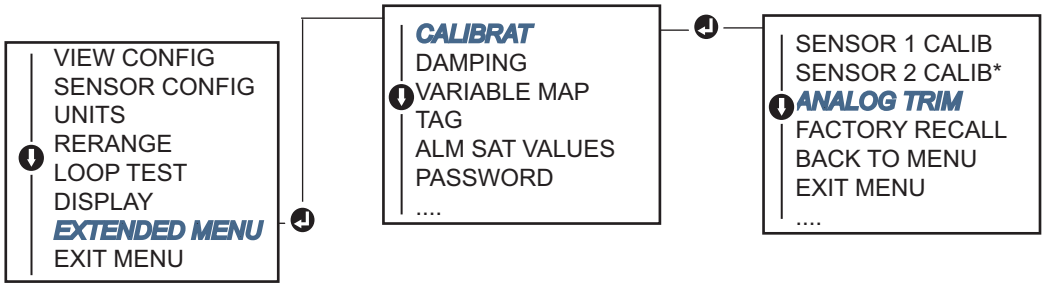

5.5.3 Performing a scaled output trim

The *Scaled Output Trim* matches the 4 and 20mA points to a user-selectable reference scale other than 4 and 20 mA (2–10 volts, for example). To perform a scaled D/A trim, connect an accurate reference meter to the transmitter and trim the output signal to scale as outlined in the "Trim the analog output" procedure.

Performing a Analog Output Trim using a Field Communicator

1. Connect an accurate reference meter to the transmitter at the **CONNECT REFERENCE METER** prompt by shunting the power to the transmitter through the reference meter at some point in the loop.

From the *HOME* screen, enter the fast key sequence

Device Dashboard Fast Keys	3, 4, 5, 2

Performing a Analog Output Trim using AMS Device Manager

1. Right click on the device and select **Service Tools.**
2. In the left navigation pane click on **Maintenance**.
3. Find the **Analog Calibration** tab and click on the **Scaled Trim** button.
4. Follow the screen prompts that will guide you through the Analog Trimming process.

5.6 Transmitter-Sensor Matching

Use *Transmitter-Sensor Matching* to enhance the temperature measurement accuracy of the system and if you have a sensor with Callendar-Van Dusen constants. When ordered from Emerson Process Management, sensors with Callendar-Van Dusen constants are NIST-traceable.

The 644 accepts Callendar-Van Dusen constants from a calibrated RTD schedule and generates a special custom curve to match that specific sensor Resistance vs. Temperature performance. Figure 5-6.

Figure 5-6. Standard vs. Actual sensor curve

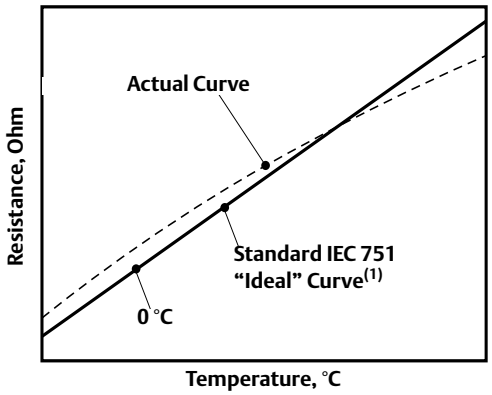

(1) The Actual Curve is identified from the Callendar-Van Dusen equation.

Matching the specific sensor curve with the transmitter significantly enhances the temperature measurement accuracy. See the comparison below in Table 5-1.

Table 5-1. Standard RTD vs. RTD with matched CVD constants with standard transmitter accuracy

System Accuracy Comparison at 150 °C Using a PT 100 (α=0.00385) RTD with a Span of 0 to 200 °C			
Standard RTD		Matched RTD	
644H	±0.15 °C	644H	±0.15 °C
Standard RTD	±1.05 °C	Matched RTD	±0.18 °C
Total System(1)	±1.06 °C	Total System(1)	±0.23 °C

(1) Calculated using root-summed-squared (RSS) statistical method

$$TotalSystemAccuracy = \sqrt{(TransmitterAccuracy)^2 + (SensorAccuracy)^2}$$

Table 5-2. Standard RTD vs. RTD with matched CVD constants with Enhanced transmitter accuracy option P8

System Accuracy Comparison at 150 °C Using a PT 100 (α=0.00385) RTD with a Span of 0 to 200 °C			
Standard RTD		Matched RTD	
644	±0.10 °C	644	±0.10 °C
Standard RTD	±1.05 °C	Matched RTD	±0.18 °C
Total System(1)	±1.05 °C	Total System(1)	±0.21 °C

(1) Calculated using root-summed-squared (RSS) statistical method

$$\text{TotalSystemAccuracy} = \sqrt{(\text{TransmitterAccuracy})^2 + (\text{SensorAccuracy})^2}$$

Callendar-Van Dusen equation:

The following input variables, included with specially-ordered Rosemount temperature sensors, are required:

$$R_t = R_o + R_o\alpha\,[t - \delta(0.01t-1)(0.01t) - \beta(0.01t - 1)(0.01t)^3]$$

R0 = Resistance at Ice Point
Alpha = Sensor Specific Constant
Beta = Sensor Specific Constant
Delta = Sensor Specific Constant

To input Callendar-Van Dusen constants, perform one the following procedures:

Entering CVD Constants using a Field Communicator

From the *HOME* screen, enter the fast key sequence

Device Dashboard Fast Keys	2, 2, 1, 9

Entering CVD Constants using AMS Device Manager

Right click on the device and select **Configure**.

1. In the left navigation pane choose **Manual Setup** and choose the **Sensor 1** or **Sensor 2** tab depending on the need.
2. Find the **Transmitter Sensor Matching (CVD)** group box and enter in the required CVD constants. Or click the “Set CVD Coefficients” button to be guided through steps. You may also click on the “Show CVD Coefficients” button to see the current coefficients loaded into the device.
3. Click **Apply** when complete.

Note
When the transmitter-senor matching is disabled, the transmitter reverts to either user or factory trim, whichever was used previously. Make certain the transmitter engineering units default correctly before placing the transmitter into service.

5.7 Switching HART Revision

Some systems are not capable of communicating with HART Revision 7 devices. The following procedures list how to change HART revisions between HART Revision 7 and HART Revision 5.

5.7.1 Switching HART revision using the Generic Menu

If the HART configuration tool is not capable of communicating with a HART Revision 7 device, it should load a Generic Menu with limited capability. The following procedures allow for switching between HART Revision 7 and HART Revision 5 from a Generic Menu in any HART compliant configuration tool.

1. Locate “Message” field
   a. To change to HART Revision 5, Enter: **HART5** in the message field
   b. To change to HART Revision 7, Enter: **HART7** in the message field

5.7.2 Switching HART revision using a Field Communicator

From the HOME screen, enter the fast key sequence and follow steps within the FieldCommunicator to complete the HART revision change.

From the *HOME* screen, enter the fast key sequence

Device Dashboard Fast Keys	2, 2, 8, 3

5.7.3 Switching HART revision with AMS Device Manager

Right click on the device and select **Configure**.

1. In the left navigation pane choose **Manual Setup** and click on the **HART** tab.
2. Click on the **Change HART Revision** button and follow the prompts.

Note
HART Revision 7 is only compatible with AMS Device Manager 10.5, and greater. AMS Device Manager version 10.5 requires a software patch to be compatible.

5.7.4 Switching HART revision with Local Operator Interface

Reference the below image for where to find HART Rev in the LOI menu.

Figure 5-7. Switching the HART Revision with the LOI

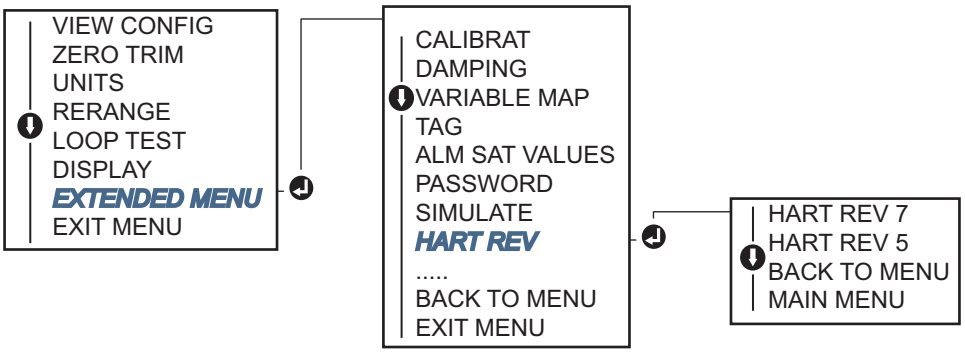

Section 6 Troubleshooting

Overview . . . . . page 83
Safety messages . . . . . page 83
Troubleshooting the 4-20 mA/HART output . . . . . page 85
Diagnostic messages . . . . . page 86

6.1 Overview

Table 6-1 on page 85 provides summarized maintenance and troubleshooting suggestions for the most common operating problems.

If you suspect malfunction despite the absence of any diagnostic messages on the Field Communicator display, follow the procedures described in Table 6-1 on page 85 to verify that transmitter hardware and process connections are in good working order. Under each of four major symptoms, specific suggestions are offered for solving problems. Always deal with the most likely and easiest-to-check conditions first.

6.2 Safety messages

Procedures and instructions in this section may require special precautions to ensure the safety of the personnel performing the operations. Information that raises potential safety issues is indicated by a warning symbol (⚠). Refer to the following safety messages before performing an operation preceded by this symbol.

⚠ WARNING

Explosions could result in death or serious injury:

Installation of this transmitter in an explosive environment must be in accordance with the appropriate local, national, and international standards, codes, and practices. Please review the approvals section of this reference manual for any restrictions associated with a safe installation.

- Before connecting a Field Communicator in an explosive atmosphere, ensure the instruments in the loop are installed in accordance with intrinsically safe or non-incendive field wiring practices.
- In an Explosion-Proof/Flameproof installation, do not remove the transmitter covers when power is applied to the unit.

Process leaks may cause harm or result in death.

- Install and tighten process connectors before applying pressure.

Electrical shock can result in death or serious injury.

- Avoid contact with the leads and terminals. High voltage that may be present on leads can cause electrical shock.

6.3 Troubleshooting the 4-20 mA/HART output

Table 6-1. Rosemount 644 troubleshooting table for 4-20 mA output

Symptom or Issue	Potential Source	Corrective Action
Transmitter Does Not Communicate with Field Communicator	Loop Wiring	■ Check the revision level of the transmitter device descriptors (DDs) stored in your communicator. The communicator should report Dev v4, DD v1 (improved), or reference "Field Communicator" on page 3-2 for previous versions. Contact Emerson Process Management Customer Central for assistance. ■ Check for a minimum of 250 ohms resistance between the power supply and Field Communicator connection. ■ Check for adequate voltage to the transmitter. If a Field Communicator is connected and 250 ohms resistance is properly in the loop, then the transmitter requires a minimum of 12.0 V at the terminals to operate (over entire 3.5 to 23.0 mA operating range), and 12.5 V minimum to communicate digitally. ■ Check for intermittent shorts, open circuits, and multiple grounds.
High Output	Sensor Input Failure or Connection	■ Connect a Field Communicator and enter the transmitter test mode to check for a sensor failure. ■ Check for a sensor open or short circuit. ■ Check the process variable to see if it is out of range.
	Loop Wiring	■ Check for dirty or defective terminals, interconnecting pins, or receptacles
	Power Supply	■ Check the output voltage of the power supply at the transmitter terminals. It should be 12.0 to 42.4 Vdc (over entire 3.75 to 23 mA operating range).
	Electronics	■ Connect a Field Communicator and enter the transmitter status mode to isolate module failure. ■ Connect a Field Communicator and check the sensor limits to ensure calibration adjustments are within the sensor range.
Erratic Output	Loop Wiring	■ Check for adequate voltage to the transmitter. It should be 12.0 to 42.4 Vdc at the transmitter terminals (over entire 3.75 to 23 mA operating range). ■ Check for intermittent shorts, open circuits, and multiple grounds. ■ Connect a Field Communicator and enter the Loop test mode to generate signals of 4 mA, 20 mA, and user-selected values.
	Electronics	■ Connect a Field Communicator and enter the transmitter test mode to isolate module failure.

Symptom or Issue	Potential Source	Corrective Action
Low or No Output	Sensor Element	■ Connect a Field Communicator and enter the Transmitter test mode to isolate a sensor failure. ■ Check the process variable to see if it is out of range.
	Loop Wiring	■ Check for adequate voltage to the transmitter. It should be 12.0 to 42.4 Vdc (over entire 3.75 to 23 mA operating range). ■ Check for shorts and multiple grounds. ■ Check for proper polarity at the signal terminal. ■ Check the loop impedance. ■ Connect a Field Communicator and enter the Loop test mode. ■ Check wire insulation to detect possible shorts to ground.
	Electronics	■ Connect a Field Communicator and check the sensor limits to ensure calibration adjustments are within the sensor range.

6.4 Diagnostic messages

Listed in the below sections are detailed tables of the possible messages that will appear on either the LCD/LOI Display, a Field Communicator, or an AMS system. Use the tables below to diagnose particular status messages.

- Failed
- Maintenance
- Advisory

6.4.1 Diagnostic messages: Failed

Table 6-2. Status: Failed – Fix now

Alert Name	LCD Screen	LOI Screen	Problem	Recommended Action
Electronics Failure	ALARM DEVICE . . . ALARM FAIL	ALARM DEVICE . . . ALARM FAIL	If diagnostics indicate and electronics failure, essential electronics in the device have failed. For example, the transmitter may have experienced an electronics failure while attempting to store information.	1. Restart the transmitter. 2. If condition persists, replace the transmitter. Contact the nearest Emerson Process Management Field Service Center if necessary.
Sensor Open[1]	ALARM SNSR 1 . . ALARM FAIL	ALARM SNSR 1 . . ALARM FAIL	This message indicates that the transmitter has detected an open sensor condition. The sensor may be disconnected, connected improperly, or malfunctioning.	1. Verify the sensor connection and wiring. Refer to the wiring diagrams found on the transmitter label to ensure proper wiring. 2. Verify the integrity of the sensor and sensor lead wires. If the sensor is faulty, repair or replace the sensor.
Sensor Short[1]	ALARM SNSR 1 . . ALARM FAIL	ALARM SNSR 1 . . ALARM FAIL	This message indicates that the transmitter has detected a shorted sensor condition. The sensor may be disconnected, connected improperly, or malfunctioning.	1. Verify the process temperature is within the specified sensor's range. Use the Sensor Information button to compare with the process temperature. 2. Verify the sensor is properly wired and connected to the terminals. 3. Verify the integrity of the sensor and sensor lead wires. If the sensor is faulty, repair or replace the sensor.
Terminal Temperature Failure	ALARM TERM . . ALARM FAIL	ALARM TERM . . ALARM FAIL	The Terminal Temperature is outside the internal RTD's specified operating range.	1. Verify the ambient temperature is within the device specified operating range using the Terminal Temperature Information Button.

Alert Name	LCD Screen	LOI Screen	Problem	Recommended Action
Invalid Configuration	CONFG SNSR 1 . . WARN ERROR	CONFG SNSR 1 . . WARN ERROR	The Sensor Configuration (type and/or connection) does not match the sensor output and is invalid.	1. Verify sensor type and number of wires matched the Sensor Configuration of the device. 2. Reset the device. 3. If error persists, download the transmitter configuration. 4. If error still present, replace the transmitter.
Field Device Malfunction	ALARM DEVICE . . . ALARM FAIL	ALARM DEVICE . . . ALARM FAIL	The device has malfunctioned or needs immediate attention.	1. Perform a processor reset. 2. View other alerts to see if the transmitter indicates a specific problem. 3. If the condition persists, replace the device.

(1) Sensor 1 is used here as an example. If Dual Sensors are ordered this alert can apply to either sensor.

6.4.2 Diagnostic messages: Warning

Alert Name	LCD Screen	LOI Screen	Problem	Recommended Action
Hot Backup Active	HOT BU SNSR 1 . . HOT BU FAIL	HOT BU SNSR 1 . . HOT BU FAIL	Sensor 1 has failed (open or shorted) and Sensor 2 is now the primary process variable output.	1. Replace Sensor 1 at you earliest convenience. 2. Reset Hot Backup feature in the device software.
Sensor Drift Alert Active (1)	WARN DRIFT . . WARN ALERT	WARN DRIFT . . WARN ALERT	The difference between Sensor 1 and 2 has gone beyond the user-configured Drift Alert Threshold.	1. Verify sensor connections are valid on the transmitter. 2. If necessary, check calibration of each sensor. 3. Verify process conditions match sensor outputs. 4. If calibration fails, one of the sensors has failed. Replace it at your earliest convenience.
Sensor Degraded(1)	WARN SNSR 1 . . DEGRA SNSR 1	WARN SNSR 1 . . DEGRA SNSR 1	The resistance of the thermocouple loop has exceeded the configured threshold. This could be caused by excess EMF.	1. Check terminal connections on the 644 terminal screws for corrosion. 2. Check the thermocouple loop for any signs of corrosion in terminal blocks, wire thinning, wire breaks, or faulty connections. 3. Verify the integrity of the sensor itself. Harsh process conditions may cause long-term sensor failures.
Calibration Error	[none]	[none]	The value entered for the user trim point was not acceptable.	1. Re-trim the device, make sure the user entered calibration points are close to the applied calibration temperature.

Alert Name	LCD Screen	LOI Screen	Problem	Recommended Action
Sensor Out of Operating Limits(1)	SAT SNSR 1 . . XX.XXX °C	SAT SNSR 1 . . XX.XXX °C	Sensor # readings are outside the sensor's specified range.	1. Verify the process temperature is within the specified sensor's range. Use the Sensor Information button to compare with the process temperature. 2. Verify the sensor is properly wired and connected to the terminals. 3. Verify the integrity of the sensor and sensor lead wires. If the sensor is faulty, repair or replace the sensor.
Terminal Temperature Out of Operating Limits	SAT TERM . . DEGRA WARN	SAT TERM . . DEGRA WARN	The Terminal Temperature is outside the on-board RTD specified operating range	1. Verify the ambient temperature is within the device specified operating range using the Terminal Temperature Information Button.

(1) Sensor 1 is used here as an example. If Dual Sensors are ordered this alert can apply to either sensor.

6.4.3 Other LCD messages

Alert Name	LCD Screen	LOI Screen	Problem	Recommended Action
LCD is not displaying correctly or at all	644 HART 7	644 HART 7	The display may not be functioning or it may be stuck on Home screen	If the meter does not appear to function, make sure the transmitter is configured for the meter option you desire. The meter will not function if the LCD Display option is set to Not Used.
Analog Output Fixed	WARN LOOP . . WARN FIXED	WARN LOOP . . WARN FIXED	The analog output is set to a fixed value and is not currently tracking the HART Primary Variable.	1. Verify that it was intended for the transmitter to be operating in “Fixed Current Mode.” 2. Disable “Fixed Current Mode” in Service Tools to have the analog output operate normally.

Alert Name	LCD Screen	LOI Screen	Problem	Recommended Action
Simulation Active	[none]	[none]	The device is in simulation mode and may not be reporting actual information.	1. Verify that simulation is no longer required. 2. Disable simulation mode in service tools. 3. Perform a Device Reset.

Section 7 Safety Instrumented Systems (SIS) Certification

Safety Instrumented Systems (SIS) certification . . . . . page 93
644 safety certified identification . . . . . page 93
Installation . . . . . page 94
Commissioning . . . . . page 94
Configuration . . . . . page 94
Alarm and saturation levels . . . . . page 95
644 SIS operation and maintenance . . . . . page 96
Specifications . . . . . page 98

7.1 Safety Instrumented Systems (SIS) certification

The 644 Temperature transmitter is a two wire, 4-20 mA smart device. For safety instrumented systems usage it is assumed that the 4-20 mA output is used as the primary safety variable. The transmitter can be equipped with or without the display. The 644 Temperature transmitter is classified as a Type B device according to IEC61508, having a hardware fault tolerance of 0.

The 644 HART Head Mount transmitter is certified to IEC 61508 for single transmitter use in Safety Instrumented Systems up to SIL 2 and redundant transmitter use in Safety Instrumented Systems up to SIL 3.

7.2 644 safety certified identification

All 644 HART Head mount transmitters must be identified as safety certified before installing into SIS systems.

To identify a safety certified 644, make sure the device satisfies number 1 below as well as at least one of the options in 2, 3 or 4.

1. Verify the transmitter was ordered with Output Option code “A”. This signifies that it is a 4-20mA/HART device.
   a. For Example: MODEL 644HA.....
2. See a Yellow Tag affixed to the top of the transmitter face, a yellow Tag affixed to the outside of the enclosure if preassembled, or the option code QT in the transmitter model string.

3. Check the Namur Software Revision located on the adhesive transmitter tag. "SW _._._".
   If the Device label software revision is 1.1.1 or higher, the device is safety certified.

Namur Software Revision Number	
SW(1)	1.1.x

(1) Namur Software Revision: Located on the adhesive device tag.

4. You can also identify a certified 644 by its Device Revision which can be found using any HART compliant communicator.

   For the 644, certified device revisions are as follows:

   – Device Revision 8.x (HART 5)
   – Device Revision 9.x (HART 7)

7.3 Installation

No special installation is required in addition to the standard installation practices outlined in this document. Always ensure a proper seal by installing the electronics housing cover(s) so that metal contacts metal.

The loop should be designed so the terminal voltage does not drop below 12 Vdc when the transmitter output is 24.5 mA.

Environmental limits are available in the 644 Product Data Sheet (Document No. 00813-0100-4728). This document can be found at http://www2.emersonprocess.com/en-US/documentation/Pages/DocSearch.aspx.

7.4 Commissioning

The 644 Safety Certified Transmitter can be commissioned by a person with average knowledge of Rosemount temperature transmitters and the configuration device being used. Please refer to "System readiness" on page 9 to confirm your system's HART Revision capability and to confirm the installation of the correct device drivers (separate drivers required for HART 5 and HART 7).

To commission the 644 Safety Certified Transmitter using a 375/475 Field Communicator, use the Table C-1 on page 155.

For more information on the Field Communicator visit http://www2.emersonprocess.com/en-US/brands/fieldcommunicator/Pages/fieldcommunicators.aspx.

7.5 Configuration

Use any HART capable configuration tool or the optional Local Operator Interface to communicate with and verify the initial configuration or any configuration changes made to the 644 prior to operating in Safety Mode. All configuration methods outlined in Section 3 are the same for the safety certified 644 temperature transmitter with any differences noted.

Software Lock must be used in order to prevent unwanted changes to the transmitter configuration.

Note
Transmitter output is not safety-rated during the following: Configuration changes, Multidrop operation, Simulation, Active Calibrator mode, and loop tests. Alternative means should be used to ensure process safety during transmitter configuration and maintenance activities.

7.5.1 Damping

User-adjustable damping affects the transmitter's ability to respond to changes in the applied process. The ***damping value*** + ***response time*** should not exceed the loop requirements.

If using a Thermowell assembly, please make sure to also take into account the added response time due to thermowell material.

7.6 Alarm and saturation levels

The 644 features software driven alarm diagnostics. The independent circuit is designed to provide backup alarm output if the microprocessor software fails. The transmitter will go to a high or low output current for internally detected failures. The connected PLC must monitor the transmitter current for the high and low output current values beyond the normal range. The alarm directions (HI/LO) are user-selectable using the failure mode hardware switch found on the top face of the device. If failure occurs, the position of the switch determines the direction in which the output is driven (HI or LO). The switch feeds into the digital-to-analog (D/A) converter, which drives the proper alarm output even if the microprocessor fails. The values at which the transmitter drives its output in failure mode depends on whether it is configured to Standard, Custom, or NAMUR-compliant (NAMUR recommendation NE 43, June 1997) operation. Figure 7-1 on page 96 shows the alarm ranges available for the device to be configured to. The DCS, or safety logic solver, should be configured to match transmitter configuration.

Setting the alarm values is a two step process:

1. With a Field Communicator, select the alarm and saturation levels using the following Fast key sequence 1, 3, 4, 2.
2. Position the Alarm switch to the required HI or LO position.

Figure 7-1. Alarm levels

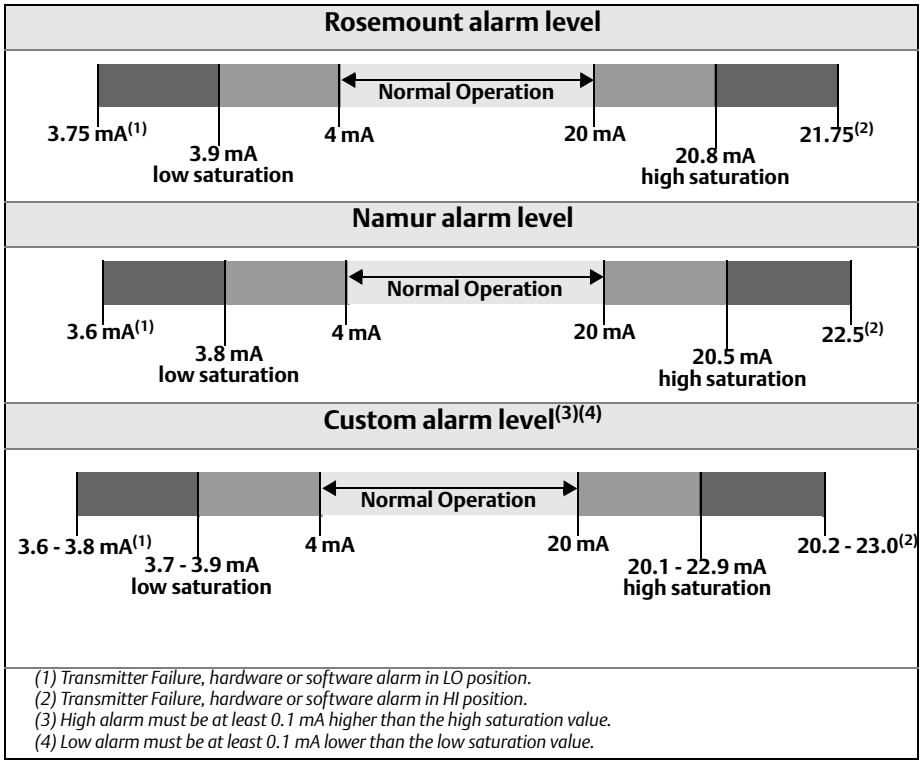

(1) Transmitter Failure, hardware or software alarm in LO position.
(2) Transmitter Failure, hardware or software alarm in HI position.
(3) High alarm must be at least 0.1 mA higher than the high saturation value.
(4) Low alarm must be at least 0.1 mA lower than the low saturation value.

7.7 644 SIS operation and maintenance

7.7.1 Proof Test

The following proof tests are recommended. In the event that an error is found in the safety functionality, proof test results and corrective actions taken must be documented at www.rosemount.com/safety. Use Table C-1 on page 155 to perform Loop Test, Review – Device Variables, and view Status.

The required proof test intervals depends upon the transmitter configuration and the temperature sensor(s) in use. Guidance is available in Table 7-1 on page 98. Refer to the Rosemount 644 FMEDA report for further information.

7.7.2 Abbreviated proof test

Conducting the Abbreviated Proof Test detects approximately 63% of transmitter DU failures, and approximately 90% of temperature sensor(s) DU failures, not detected by the 644 safety-certified automatic diagnostics, for a typical overall assembly coverage of 67%.

1. Bypass the safety PLC or take other appropriate action to avoid a false trip.
2. Using Loop Test, enter the milliampere value representing a high alarm state.
3. Check the reference meter to verify the mA output corresponds to the entered value. This tests for compliance voltage problems such as a low loop power supply voltage or increased wiring resistance. This also tests for other possible failures.
4. Using Loop Test, enter the milliampere value representing a low alarm state. This tests for possible dormant current related failures.
5. Check the reference meter to verify the mA output corresponds to the entered value.
6. Use a Field Communicator to view detailed device status to ensure no alarms or warnings are present in the transmitter.
7. Check that sensor value(s) are reasonable in comparison to a basic process control system (BPCS) value.
8. Restore the loop to full operation. Remove the bypass from the safety PLC or otherwise restore normal operation.
9. Document the test results per the plant's requirements.

7.7.3 Extended proof test

Conducting the Extended Proof Test, which includes the Abbreviated Proof Test, detects approximately 96% of transmitter DU failures and approximately 99% of temperature sensor(s) DU failures, not detected by the 644 safety-certified automatic diagnostics, for a typical overall assembly coverage of 96%.

1. Bypass the safety PLC or take other appropriate action to avoid a false trip.
2. Execute the Abbreviated Proof Test.
3. Perform a minimum two point sensor verification check. If two sensors are used, repeat for each sensor. If calibration is required for the installation, it may be done in conjunction with this verification.
4. Verify that the housing temperature value is reasonable.
5. Restore the loop to full operation. Remove the bypass from the safety PLC or otherwise restore normal operation.
6. Document the test results per the plant's requirements.

Table 7-1. Proof test intervals

Sensors	Abbreviated Proof Test	Extended Proof Test
4-wire RTD	10 years	10 years
Thermocouple	1 year	10 years
	2 years	2 years
Dual Thermocouple	10 years	10 years
Dual 3-wire RTD	10 years	10 years
Thermocouple & 3-wire RTD	10 years	10 years

Proof test intervals are based on sensor failure rates from the "***Electrical and Mechanical Component Reliability Handbook, Second Edition", exida, 2008***. A low stress environment is assumed, with 30% of SIL 2 PFDavg limit budgeted for the transmitter and sensor element. See the FMEDA report for additional details or references.

Visual Inspection

Not required

Special Tools

Not required

Product Repair

The 644 is repairable by replacement only.

All failures detected by the transmitter diagnostics or by the proof-test must be reported. Feedback can be submitted electronically at http://www.emersonprocess.com/rosemount/safety/safetyCertTemp.htm (Contact Us button).

7.8 Specifications

The 644 must be operated in accordance to the functional and performance specifications provided in the Rosemount 644 Product Data Sheet (document number 00813-0100-4728).

7.8.1 Failure rate data

The FMEDA report includes failure rates and common cause Beta factor estimates.

The report is available at http://www2.emersonprocess.com/en-US/brands/rosemount/Safety-Products/Pages/index.aspx.

7.8.2 Failure values

Safety accuracy: ±2.0 percent
Transmitter response time: 1.5 second
Self-diagnostics Test: At least once every 60 minutes

7.8.3 Product life

50 years - based on worst case component wear-out mechanisms - not based on wear-out of process sensors.

Report any safety related product information at: http://rosemount.d1asia.ph/rosemount/safety/ReportAFailure_newweb.asp

Appendix A Specifications and Reference Data

Specifications . . . . . page 101
4–20 mA / HART Specifications . . . . . page 107
Dimensional Drawings . . . . . page 114
Ordering Information . . . . . page 119
Specifications and Reference Data for 644 HART Head Mount . . . . . page 130

A.1 Specifications

A.1.1 Functional

Inputs

User-selectable; sensor terminals rated to 42.4 Vdc. See"Accuracy" on page 109 for sensor options.

Output

Single 2 wire device with 4-20 mA/HART (Revision 5 or 7 Selectable), linear with temperature or input.

Isolation

Input/output isolation tested to 620 Vrms (876.8 Vpp) at 50/60 Hz

Local Display

The optional five-digit integral LCD Display includes a floating or fixed decimal point. It can also display engineering units (°F, °C, °R, K, Ω, and millivolts), mA, and percent of span. The display can be configured to alternate between selected display options. Display settings are preconfigured at the factory according to the standard transmitter configuration. They can be reconfigured in the field using HART communications.

LCD display with Local Operator Interface

An optional 14 digit, 2 line integral LCD display operates with a floating or fixed decimal point. The LOI includes all features and functionality available in the regular display with an added 2-button configuration capability directly at the display interface. The LOI also has optional Password Protection for secure operations. The LOI is only available on the 644 HART Head mount product.

For more information on the LOI configuration options or further functionality that the LOI offers, see Appendix D Local Operator Interface (LOI).

Humidity Limits

0–95% relative humidity

Update Time

≤ 0.5 seconds per sensor

Accuracy (default configuration) PT 100

HART (0-100 °C): ±0.18 °C

±0.1 °C (when ordered with option P8)

A.1.2 Physical

Electrical Connections

Model	Power and Sensor Terminals
644H	Captivated screw terminals permanently fixed to terminal block
644R	Compression screw permanently fixed to front panel

Field Communicator Connections

Communication Terminals	
644H	Clips permanently fixed to terminal block
644R	Clips permanently fixed to front panel

Materials of Construction

Electronics Housing and Terminal Block	
644H	*Noryl*® glass reinforced
644R	*Lexan*® polycarbonate
Enclosure (Options J5, J6, R1, and R2)	
Housing	Low-copper aluminum
Paint	Polyurethane
Cover O-ring	Buna-N

Materials of Constructions (Stainless Steel Housing for Biotechnology, Pharmaceutical Industries, and Sanitary Applications)

Housing and Standard Meter Cover

- 316 SST

Cover O-Ring

- Buna-N

Mounting

The 644R attaches directly to a wall or a DIN rail. The 644H installs in a connection head or universal head mounted directly on a sensor assembly, apart from a sensor assembly using a universal head, or to a DIN rail using an optional mounting clip.

Weight

Code	Options	Weight
644H	HART, Head Mount Transmitter	95 g (3.39 oz)
644H	FOUNDATION fieldbus, Head Mount Transmitter	92 g (3.25 oz)
644H	Profibus PA Head Mount Transmitter	92 g (3.25 oz)
644R	HART, Rail Mount Transmitter	174 g (6.14 oz)
M5	LCD Display	35 g (1.34 oz)
M4	LCD Display with Local Operator Interface	35g (1.34 oz)
J1, J2	Universal Head, 3-conduits, Standard Cover	200 g (7.05 oz)
J1, J2	Universal head, 3-conduits, Meter Cover	307 g (10.83 oz)
J3, J4	Cast SST Universal head, 3-conduits, Standard Cover	2016 g (71.11 oz)
J3, J4	Cast SST Universal head, 3-conduits, Meter Cover	2122 g (74.85 oz)
J5, J6	Aluminum 2-conduits, Universal Head, Standard Cover	577 g (20.35 oz)
J5, J6	Aluminum 2-conduits, Universal Head, Meter Cover	667 g (23.53 oz)
J7, J8	Cast SST Universal Head 2-conduits, Standard, Cover	1620 g (57.14 oz)
J7, J8	Cast SST Universal Head 2-conduits, Meter Cover	1730 g (61.02 oz)
R1, R2	Aluminum Connection Head, Standard Cover	523 g (18.45 oz)
R1, R2	Aluminum Connection Head, Meter Cover	618 g (21.79 oz)
R3, R4	Cast SST Connection Head, Standard Cover	1615 g (56.97 oz)
R3, R4	Cast SST Connection Head, Meter Cover	1747 g (61.62 oz)

Weight (Stainless Steel Housing for Biotechnology, Pharmaceutical Industries, and Sanitary Applications)

Option Code	Standard Cover	Meter Cover
S1	840 g (27 oz)	995 g (32 oz)
S2	840 g (27 oz)	995 g (32 oz)
S3	840 g (27 oz)	995 g (32 oz)
S4	840 g (27 oz)	995 g (32 oz)

Enclosure Ratings (644H)

All available enclosures are Type 4X, IP66, and IP68.

Sanitary Housing Surface

Surface finish is polished to 32 RMA. Laser etched product marking on housing and standard covers.

A.1.3 Performance

EMC (ElectroMagnetic Compatibility)

NAMUR NE 21 Standard

The Rosemount 644 meets the requirements for the NAMUR NE 21 rating.

Susceptibility	Parameter	Influence
		HART
ESD	■ 6 kV contact discharge ■ 8 kV air discharge	None
Radiated	■ 80 MHz to 2.7 GHz at 10 V/m	< 1.0%
Burst	■ 1 kV for I.O.	None
Surge	■ 1 kV line–ground	None
Conducted	■ 10 kHz to 80 MHz at 10 V	< 1.0%

CE Electromagnetic Compatibility Compliance Testing

The 644 is compliant with Directive 2004/108/EC. Meets the criteria under IEC 61326:2006.

Power Supply Effect

Less than ±0.005% of span per volt

Stability

RTDs and thermocouples have a stability of ±0.15% of output reading or 0.15 °C (whichever is greater) for 24 months.

When ordered with the P8 option code:

- RTDs: ±0.25% of reading or 0.25 °C, whichever is greater, for 5 years
- Thermocouples: ±0.5% of reading or 0.5 °C, whichever is greater, for 5 years

Self Calibration

The analog-to-digital measurement circuitry automatically self-calibrates for each temperature update by comparing the dynamic measurement to extremely stable and accurate internal reference elements.

Vibration Effect

The 644 HART is tested to the following specifications with no effect on performance per IEC 60770-1, 2010:

Frequency	Vibration
10 to 60 Hz	0.35 mm displacement
60 to 1000 Hz	5 g (50 m/s^2) peak acceleration

Sensor Connections

644 Sensor Connection Diagram: 644 HART Head mount

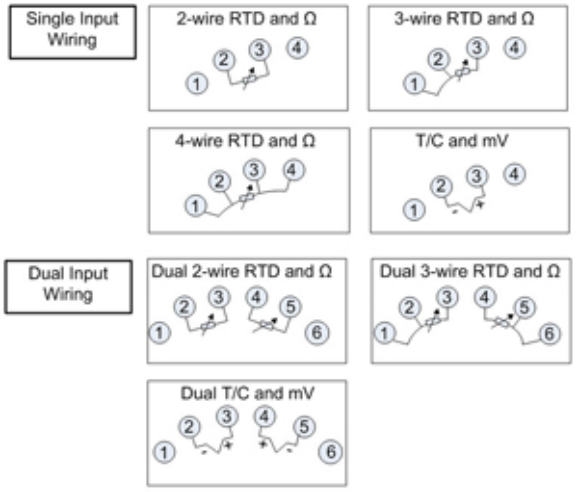

644 Sensor Connection Diagram: 644 Fieldbus and Profibus PA Head mount and 644 Rail mount

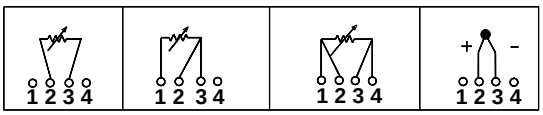

2-wire RTD and Ω | **3-wire RTD and Ω*** | **4-wire RTD and Ω** | **T/C and mV**

* Rosemount Inc. provides 4-wire sensors for all single element RTDs. You can use these RTDs in 3-wire configurations by leaving the unneeded leads disconnected and insulated with electrical tape.

Rosemount Conformance to Specifications

A Rosemount product not only meets its published specifications, but most likely exceeds them. Advanced manufacturing techniques and the use of Statistical Process Control provide specification conformance to at least ± 3σ[(1)]. Our commitment to continual improvement ensures that product design, reliability, and performance will improve annually.

For example, the Reference Accuracy distribution for the 644 is shown to the right. Our Specification Limits are ± 0.15 °C, but, as the shaded area shows, approximately 68% of the units perform three times better than the limits. Therefore, it is very likely that you will receive a device that performs much better than our published specifications.

Conversely, a vendor who "grades" product without using Process Control, or who is not committed to ± 3σ performance, will ship a higher percentage of units that are barely within advertised specification limits.

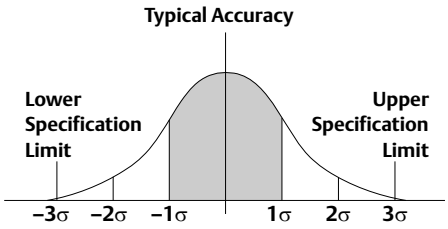

Accuracy distribution shown is for the 644, Pt 100 RTD sensor, Range 0 to 100 °C

(1) Sigma (σ) is a statistical symbol to designate the standard deviation from the mean value of a normal distribution.

A.2 4–20 mA / HART Specifications

Communication Requirements

Transmitter power terminals are rated to 42.4 Vdc. A Field Communicator requires a loop resistance between 250 – 1100 ohms. The 644 HART device does not communicate when power is below 12 Vdc at the transmitter terminals.

Power Supply

An external power supply is required for HART devices. The transmitter operates on 12.0 to 42.4 Vdc transmitter terminal voltage with load resistance between 250 and 660 ohms. A minimum of 17.75 Vdc power supply is required with a load of 250 ohms. Transmitter power terminals are rated to 42.4 Vdc.

Maximum Load = 40.8 x (Supply Voltage – 12.0)

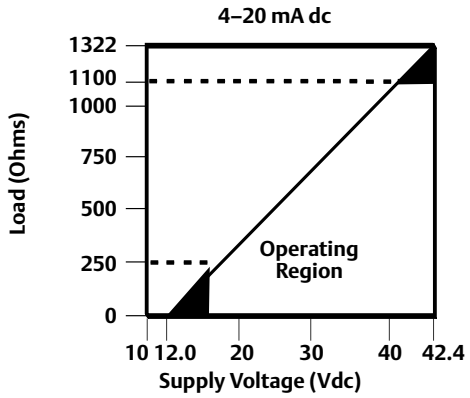

Temperature Limits

	Operating Limit	Storage Limit
With LCD Display(1)	–40 to 185 °F –40 to 85 °C	–50 to 185 °F –45 to 85 °C
Without LCD Display	–40 to 185 °F –40 to 85 °C	–60 to 248 °F –50 to 120 °C

(1) LCD may not be readable and display updates will be slower at temperature below -4 °F (-20 °C).

Hardware and Software Failure Mode

The 644 features software driven alarm diagnostics. The independent circuit is designed to provide backup alarm output if the microprocessor software fails. The alarm directions (HIGH/LO) are user-selectable using the failure mode switch. If failure occurs, the position of the switch determines the direction in which the output is driven (HI or LO). The switch feeds into the digital-to-analog (D/A) converter, which drives the proper alarm output even if the microprocessor fails. The values at which the transmitter drives its output in failure mode depends on whether it is configured to standard, custom, or NAMUR-compliant (NAMUR recommendation NE 43, June 1997) operation. Table A-1 shows the alarm ranges available for the device to be configured to.

Table A-1. Available Alarm Range(1)

	Standard	NAMUR- NE 43 Compliant
Linear Output:	3.9 ≤ I(2) ≤ 20.5	3.8 ≤ I ≤ 20.5
Fail High:	21 ≤ I ≤ 23	21 ≤ I ≤ 23
Fail Low:	3.5 ≤ I ≤ 3.75	3.5 ≤ I ≤ 3.6

(1) Measured in milliamperes.
(2) I = Process Variable (current output).

Custom Alarm and Saturation Level

Custom factory configuration of alarm and saturation level is available with option code C1 for valid values. These values can also be configured in the field using a Field Communicator.

Turn-on Time

Performance within specifications in less than 6.0 seconds after power is applied, when damping value is set to 0 seconds.

External Transient Protection

The Rosemount 470 prevents damage from transients induced by lightning, welding, or heavy electrical equipment. For more information, refer to the 470 Product Data Sheet (document number 00813-0100-4191).

Integral Transient Protection (option code T1)

The transient protector helps to prevent damage to the transmitter from transients induced on the loop wiring by lightning, welding, heavy electrical equipment, or switch gears. The transient protection electronics are contained in an add-on assembly that attaches to the standard transmitter device face. The external ground lug assembly (code G1) is included with the Transient Protector. The transient protector has been tested per the following standard:

- IEEE C62.41-1991 (IEEE 587)/ Location Categories B3.
  6kV/3kA peak (1.2 50 Ωs Wave 8 20 Ωs Combination Wave)
  6kV/0.5kA peak (100 kHz Ring Wave) EFT, 4kVpeak, 2.5kHz,
  5*50nS
- Loop resistance added by protector: 22 ohms max.
- Nominal clamping voltages: 90 V (common mode), 77 V (normal mode)

Accuracy

Table A-2. Rosemount 644 Input Options and Accuracy

Sensor Options	Sensor Reference	Input Ranges		Recommended Min. Span[1]		Digital Accuracy[2]		D/A Accuracy[3]
2-, 3-, 4-wire RTDs		°C	°F	°C	°F	°C	°F	
Pt 100 (α = 0.00385)	IEC 751	–200 to 850	–328 to 1562	10	18	± 0.15	± 0.27	±0.03% of span
Pt 200 (α = 0.00385)	IEC 751	–200 to 850	–328 to 1562	10	18	± 0.15	± 0.27	±0.03% of span
Pt 500 (α = 0.00385)	IEC 751	–200 to 850	–328 to 1562	10	18	± 0.19	± 0.34	±0.03% of span
Pt 1000 (α = 0.00385)	IEC 751	–200 to 300	–328 to 572	10	18	± 0.19	± 0.34	±0.03% of span
Pt 100 (α = 0.003916)	JIS 1604	–200 to 645	–328 to 1193	10	18	± 0.15	± 0.27	±0.03% of span
Pt 200 (α = 0.003916)	JIS 1604	–200 to 645	–328 to 1193	10	18	± 0.27	± 0.49	±0.03% of span
Ni 120	Edison Curve No. 7	–70 to 300	–94 to 572	10	18	± 0.15	± 0.27	±0.03% of span
Cu 10	Edison Copper Winding No. 15	–50 to 250	–58 to 482	10	18	±1.40	± 2.52	±0.03% of span
Pt 50 (α = 0.00391)	GOST 6651-94	–200 to 550	–328 to 1022	10	18	± 0.30	± 0.54	±0.03% of span
Pt 100 (α = 0.00391)	GOST 6651-94	–200 to 550	–328 to 1022	10	18	± 0.15	± 0.27	±0.03% of span
Cu 50 (α = 0.00426)	GOST 6651-94	–50 to 200	–58 to 392	10	18	±1.34	± 2.41	±0.03% of span
Cu 50 (α = 0.00428)	GOST 6651-94	–185 to 200	–301 to 392	10	18	±1.34	± 2.41	±0.03% of span
Cu 100 (α = 0.00426)	GOST 6651-94	–50 to 200	–58 to 392	10	18	±0.67	± 1.20	±0.03% of span
Cu 100 (α = 0.00428)	GOST 6651-94	–185 to 200	–301 to 392	10	18	±0.67	± 1.20	±0.03% of span
Thermocouples[4]								
Type B[5]	NIST Monograph 175, IEC 584	100 to 1820	212 to 3308	25	45	± 0.77	± 1.39	±0.03% of span
Type E	NIST Monograph 175, IEC 584	–50 to 1000	–58 to 1832	25	45	± 0.20	± 0.36	±0.03% of span
Type J	NIST Monograph 175, IEC 584	–180 to 760	–292 to 1400	25	45	± 0.35	± 0.63	±0.03% of span
Type K[6]	NIST Monograph 175, IEC 584	–180 to 1372	–292 to 2501	25	45	± 0.50	± 0.90	±0.03% of span
Type N	NIST Monograph 175, IEC 584	–200 to 1300	–328 to 2372	25	45	± 0.50	± 0.90	±0.03% of span
Type R	NIST Monograph 175, IEC 584	0 to 1768	32 to 3214	25	45	± 0.75	± 1.35	±0.03% of span
Type S	NIST Monograph 175, IEC 584	0 to 1768	32 to 3214	25	45	± 0.70	± 1.26	±0.03% of span
Type T	NIST Monograph 175, IEC 584	–200 to 400	–328 to 752	25	45	± 0.35	± 0.63	±0.03% of span
DIN Type L	DIN 43710	–200 to 900	–328 to 1652	25	45	± 0.35	± 0.63	±0.03% of span
DIN Type U	DIN 43710	–200 to 900	–328 to 1112	25	45	± 0.35	± 0.63	±0.03% of span
Type W5Re/W26Re	ASTM E 988-96	0 to 2000	32 to 3632	25	45	± 0.70	± 1.26	±0.03% of span
GOST Type L	GOST R 8.585-2001	–200 to 800	–328 to 1472	25	45	± 1.00	± 1.26	±0.03% of span
Other Input Types								
Millivolt Input		–10 to 100 mV				±0.015 mV		±0.03% of span
2-, 3-, 4-wire Ohm Input		0 to 2000 ohms				±0.45 ohm		±0.03% of span

(1) No minimum or maximum span restrictions within the input ranges. Recommended minimum span will hold noise within accuracy specification with damping at zero seconds.
(2) The published digital accuracy applies over the entire sensor input range. Digital output can be accessed by HART or FOUNDATION fieldbus Communications or Rosemount control system.
(3) Total Analog accuracy is the sum of digital and D/A accuracies. This is not applicable for FOUNDATION fieldbus.
(4) Total digital accuracy for thermocouple measurement: sum of digital accuracy +0.5 °C. (cold junction accuracy).
(5) Digital accuracy for NIST Type B T/C is ±3.0 °C (±5.4 °F) from 100 to 300 °C (212 to 572 °F).
(6) Digital accuracy for NIST Type K T/C is ±0.70 °C (±1.26 °F) from –180 to –90 °C (–292 to –130 °F).

Accuracy Example

When using a Pt 100 (α = 0.00385) sensor input with a 0 to 100 °C span:

- Digital accuracy = ±0.15 °C
- D/A accuracy = ±0.03% of 100 °C or ±0.03 °C
- Total accuracy = ±0.18 °C.

Table A-3. Ambient Temperature Effect

Sensor Options	Sensor Reference	Input Range (°C)	Temperature Effects per 1.0 °C (1.8 °F) Change in Ambient Temperature[1]	Range	D/A Effect[2]
2-, 3-, 4-wire RTDs					
Pt 100 (α = 0.00385)	IEC 751	-200 to 850	0.003 °C (0.0054 °F)	Entire Sensor Input Range	0.001% of span
Pt 200 (α = 0.00385)	IEC 751	-200 to 850	0.004 °C (0.0072 °F)	Entire Sensor Input Range	0.001% of span
Pt 500 (α = 0.00385)	IEC 751	-200 to 850	0.003 °C (0.0054 °F)	Entire Sensor Input Range	0.001% of span
Pt 1000 (α = 0.00385)	IEC 751	-200 to 300	0.003 °C (0.0054 °F)	Entire Sensor Input Range	0.001% of span
Pt 100 (α = 0.003916)	JIS 1604	-200 to 645	0.003 °C (0.0054 °F)	Entire Sensor Input Range	0.001% of span
Pt 200 (α = 0.003916)	JIS 1604	-200 to 645	0.004 °C (0.0072 °F)	Entire Sensor Input Range	0.001% of span
Ni 120	Edison Curve No. 7	-70 to 300	0.003 °C (0.0054 °F)	Entire Sensor Input Range	0.001% of span
Cu 10	Edison Copper Winding No. 15	-50 to 250	0.03 °C (0.054 °F)	Entire Sensor Input Range	0.001% of span
Pt 50 (α = 0.00391)	GOST 6651-94	-200 to 550	0.004 °C (0.0072 °F)	Entire Sensor Input Range	0.001% of span
Pt 100 (α = 0.00391)	GOST 6651-94	-200 to 550	0.003 °C (0.0054 °F)	Entire Sensor Input Range	0.001% of span
Cu 50 (α = 0.00426)	GOST 6651-94	-50 to 200	0.008 °C (0.0144 °F)	Entire Sensor Input Range	0.001% of span
Cu 50 (α = 0.00428)	GOST 6651-94	-185 to 200	0.008 °C (0.0144 °F)	Entire Sensor Input Range	0.001% of span
Cu 100 (α = 0.00426)	GOST 6651-94	-50 to 200	0.004 °C (0.0072 °F)	Entire Sensor Input Range	0.001% of span
Cu 100 (α = 0.00428)	GOST 6651-94	-185 to 200	0.004 °C (0.0072 °F)	Entire Sensor Input Range	0.001% of span
Thermocouples					
Type B	NIST Monograph 175, IEC 584	100 to 1820	0.014 °C	T ≥ 1000 °C	0.001% of span
			0.032 °C – (0.0025% of (T – 300)	300 °C ≤ T < 1000 °C	0.001% of span
			0.054 °C – (0.011% of (T – 100)	100 °C ≤ T < 300 °C	0.001% of span
Type E	NIST Monograph 175, IEC 584	-200 to 1000	0.005 °C + (0.0043% of T)	All	0.001% of span

Table A-3. Ambient Temperature Effect

Sensor Options	Sensor Reference	Input Range (°C)	Temperature Effects per 1.0 °C (1.8 °F) Change in Ambient Temperature[1]	Range	D/A Effect[2]
Thermocouples					
Type J	NIST Monograph 175, IEC 584	-180 to 760	0.0054 °C + (0.00029%of T)	T ≥ 0 °C	0.001% of span
			0.0054 °C + (0.0025% of absolute value T)	T < 0 °C	0.001% of span
Type K	NIST Monograph 175, IEC 584	-180 to 1372	0.0061 °C + (0.0054% of T)	T ≥ 0 °C	0.001% of span
			0.0061 °C + (0.0025% of absolute value T)	T < 0 °C	0.001% of span
Type N	NIST Monograph 175, IEC 584	-200 to 1300	0.0068 °C + (0.00036% of T)	All	0.001% of span
Type R	NIST Monograph 175, IEC 584	0 to 1768	0.016 °C	T ≥ 200 °C	0.001% of span
			0.023 °C – (0.0036% of T)	T < 200 °C	0.001% of span
Type S	NIST Monograph 175, IEC 584	0 to 1768	0.016 °C	T ≥ 200 °C	0.001% of span
			0.023 °C – (0.0036% of T)	T < 200 °C	0.001% of span
Type T	NIST Monograph 175, IEC 584	-200 to 400	0.0064 °C	T ≥ 0 °C	0.001% of span
			0.0064 °C +(0.0043% of absolute value T)	T < 0 °C	0.001% of span
DIN Type L	DIN 43710	-200 to 900	0.0054 °C + (0.00029% of T)	T ≥ 0 °C	0.001% of span
			0.0054 °C + (0.0025% of absolute value T)	T < 0 °C	0.001% of span
DIN Type U	DIN 43710	-200 to 600	0.0064 °C	T ≥ 0 °C	0.001% of span
			0.0064 °C + (0.0043% of absolute value T)	T < 0 °C	0.001% of span
Type W5Re/W26Re	ASTM E 988-96	0 to 2000	0.016 °C	T ≥ 200 °C	0.001% of span
			0.023 °C – (0.0036% of T)	T < 200 °C	0.001% of span
GOST Type L	GOST R 8.585-2001	-200 to 800	0.007 °C	T ≥ 0 °C	0.001% of span
			0.007 °C – (0.003% of absolute value T)	T < 0 °C	0.001% of span
Other Input Types					
Millivolt Input		-10 to 100 mV	0.0005 mV	Entire Sensor Input Range	0.001% of span
2-, 3-, 4-wire Ohm		0 to 2000 Ω	0.0084 Ω	Entire Sensor Input Range	0.001% of span

(1) Change in ambient is with reference to the calibration temperature of the transmitter 68 °F (20 °C) from factory.
(2) Does not apply to FOUNDATION fieldbus.

Table A-4. Transmitter Accuracy when ordered with option code P8

Sensor Options	Sensor Reference	Input Ranges		Minimum Span[1]		Digital Accuracy[2]		D/A Accuracy[3][4]
2-, 3-, 4-wire RTDs		°C	°F	°C	°F	°C	°F	
Pt 100 (α = 0.00385)	IEC 751	–200 to 850	–328 to 1562	10	18	± 0.10	± 0.18	±0.02% of span
Pt 200 (α = 0.00385)	IEC 751	–200 to 850	–328 to 1562	10	18	± 0.22	± 0.40	±0.02% of span
Pt 500 (α = 0.00385)	IEC 751	–200 to 850	–328 to 1562	10	18	± 0.14	± 0.25	±0.02% of span
Pt 1000 (α = 0.00385)	IEC 751	–200 to 300	–328 to 572	10	18	± 0.10	± 0.18	±0.02% of span
Pt 100 (α = 0.003916)	JIS 1604	–200 to 645	–328 to 1193	10	18	± 0.10	± 0.18	±0.02% of span
Pt 200 (α = 0.003916)	JIS 1604	–200 to 645	–328 to 1193	10	18	± 0.22	± 0.40	±0.02% of span
Ni 120	Edison Curve No. 7	–70 to 300	–94 to 572	10	18	± 0.08	± 0.14	±0.02% of span
Cu 10	Edison Copper Winding No. 15	–50 to 250	–58 to 482	10	18	±1.00	± 1.80	±0.02% of span
Pt 50 (α=0.00391)	GOST 6651-94	–200 to 550	–328 to 1022	10	18	±0.20	±0.36	±0.02% of span
Pt 100 (α=0.00391)	GOST 6651-94	–200 to 550	–328 to 1022	10	18	±0.10	±0.18	±0.02% of span
Cu 50 (α=0.00426)	GOST 6651-94	–50 to 200	–58 to 392	10	18	±0.34	±0.61	±0.02% of span
Cu 50 (α=0.00428)	GOST 6651-94	–185 to 200	–301 to 392	10	18	±0.34	±0.61	±0.02% of span
Cu 100 (α=0.00426)	GOST 6651-94	–50 to 200	–58 to 392	10	18	±0.17	±0.31	±0.02% of span
Cu 100 (α=0.00428)	GOST 6651-94	–185 to 200	–301 to 392	10	18	±0.17	±0.31	±0.02% of span
Thermocouples[5]								
Type B[6]	NIST Monograph 175, IEC 584	100 to 1820	212 to 3308	25	45	± 0.75	± 1.35	±0.02% of span
Type E	NIST Monograph 175, IEC 584	–200 to 1000	–328 to 1832	25	45	± 0.20	± 0.36	±0.02% of span
Type J	NIST Monograph 175, IEC 584	–180 to 760	–292 to 1400	25	45	± 0.25	± 0.45	±0.02% of span
Type K[7]	NIST Monograph 175, IEC 584	–180 to 1372	–292 to 2501	25	45	± 0.25	± 0.45	±0.02% of span
Type N	NIST Monograph 175, IEC 584	–200 to 1300	–328 to 2372	25	45	± 0.40	± 0.72	±0.02% of span
Type R	NIST Monograph 175, IEC 584	0 to 1768	32 to 3214	25	45	± 0.60	± 1.08	±0.02% of span
Type S	NIST Monograph 175, IEC 584	0 to 1768	32 to 3214	25	45	± 0.50	± 0.90	±0.02% of span
Type T	NIST Monograph 175, IEC 584	–200 to 400	–328 to 752	25	45	± 0.25	± 0.45	±0.02% of span
DIN Type L	DIN 43710	–200 to 900	–328 to 1652	25	45	± 0.35	± 0.63	±0.02% of span
DIN Type U	DIN 43710	–200 to 600	–328 to 1112	25	45	± 0.35	± 0.63	±0.02% of span

Sensor Options	Sensor Reference	Input Ranges		Minimum Span[8]		Digital Accuracy[9]		D/A Accuracy[10][11]
Thermocouples[12]								
Type W5Re/W26Re	ASTM E 988-96	0 to 2000	32 to 3632	25	45	± 0.70	± 1.26	±0.02% of span
GOST Type L	GOST R 8.585-2001	–200 to 800	–392 to 1472	25	45	± 0.25	± 0.45	±0.02% of span
Other Input Types								
Millivolt Input		–10 to 100 mV		3 mV		±0.015 mV		±0.02% of span
2-, 3-, 4-wire Ohm Input		0 to 2000 ohms		20 ohm		±0.35 ohm		±0.02% of span

(1) No minimum or maximum span restrictions within the input ranges. Recommended minimum span will hold noise within accuracy specification with damping at zero seconds.
(2) Digital accuracy: Digital output can be accessed by the Field Communicator.
(3) Total Analog accuracy is the sum of digital and D/A accuracies.
(4) Applies to HART / 4-20 mA devices.
(5) Total digital accuracy for thermocouple measurement: sum of digital accuracy +0.25 °C (0.45 °F) (cold junction accuracy).
(6) Digital accuracy for NIST Type B is ±3.0 °C (±5.4 °F) from 100 to 300 °C (212 to 572 °F).
(7) Digital accuracy for NIST Type K is ±0.50 °C (±0.9 °F) from –180 to –90 °C (–292 to –130 °F).
(8) No minimum or maximum span restrictions within the input ranges. Recommended minimum span will hold noise within accuracy specification with damping at zero seconds.
(9) Digital accuracy: Digital output can be accessed by the Field Communicator.
(10) Total Analog accuracy is the sum of digital and D/A accuracies.
(11) Applies to HART / 4-20 mA devices.
(12) Total digital accuracy for thermocouple measurement: sum of digital accuracy +0.25 °C (0.45 °F) (cold junction accuracy).

A.3 Dimensional Drawings

644 (DIN A Head Mount)

HART device shown with captivated screw terminals

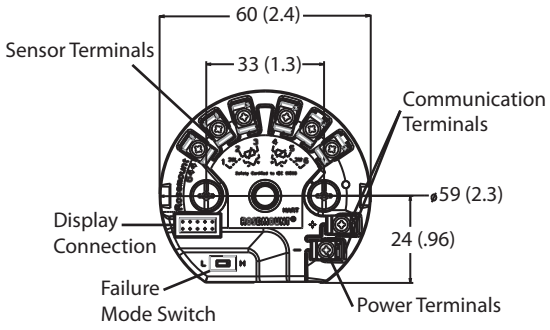

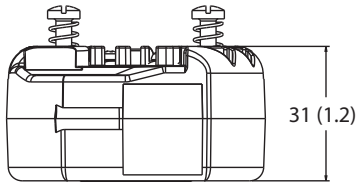

Dimensions are in millimeters (inches)

LCD Display	Enhanced Display with Local Operator Interface
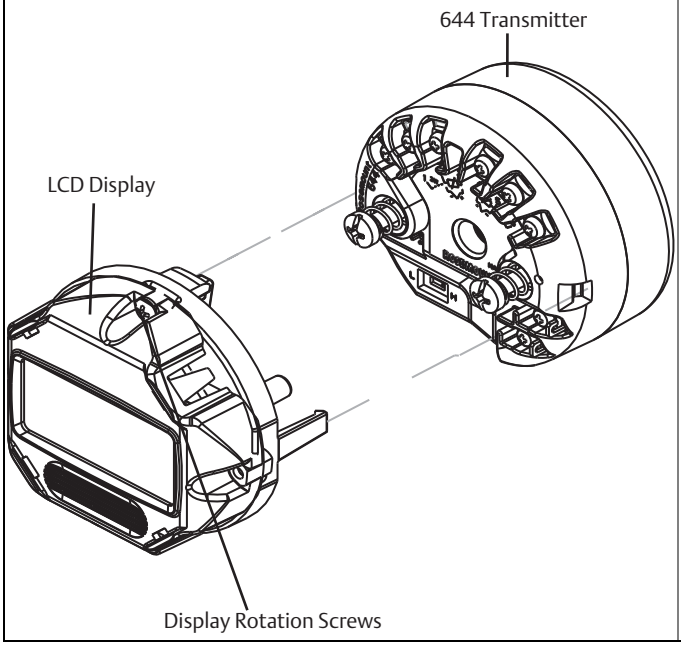	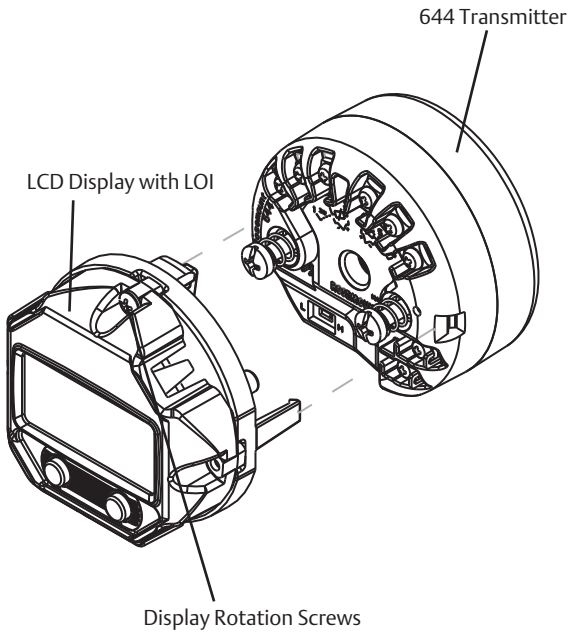

644 Rail Mount

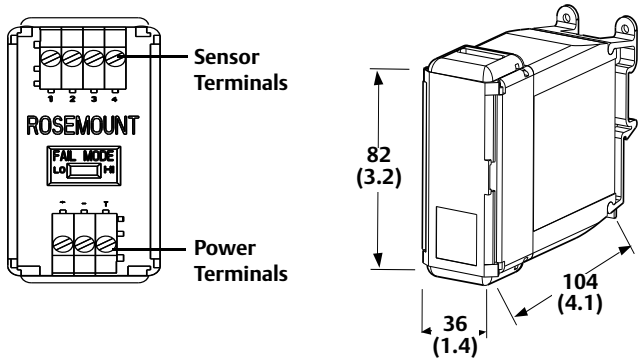

Mounting Kits for 644 Head Mount

644R Rail & Walls Clips

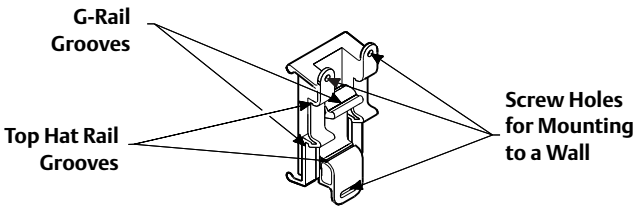

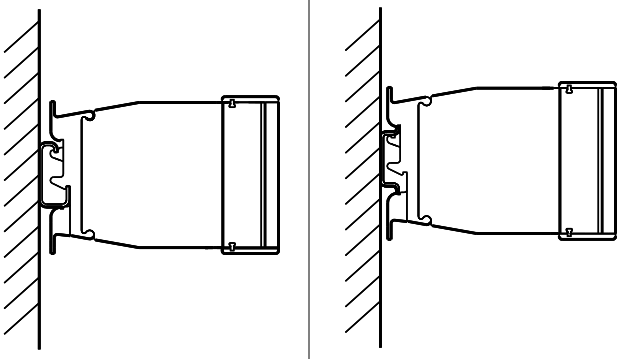

(part number 03044-4103-0001)

644H Rail Clips

G-Rail (asymmetric)	Top Hat Rail (symmetric)
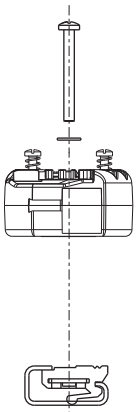	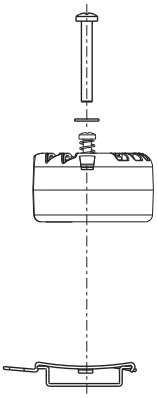

Note: Kit (part number 00644-5301-0010) includes mounting hardware and both types of rail kits.

Threaded-Sensor Universal Head (Option code J5, J6, J7 or J8)

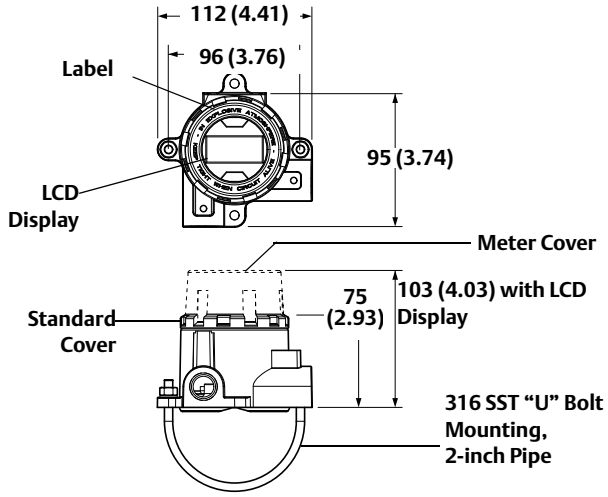

DIN Style Sensor Connection Head (Option code R1, R2, R3 or R4)

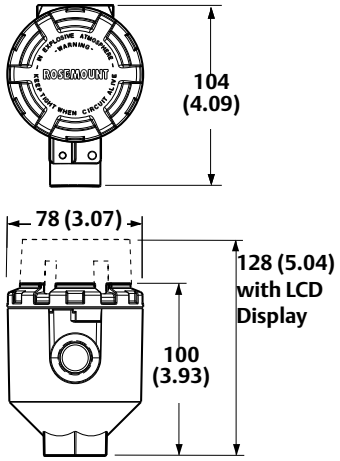

Note: A "U" Bolt is shipped with each universal head unless assembly option XA is ordered.

Dimensions are in millimeters (inches)

Threaded Sensor Universal Head, 3-conduit (Option code J1 or J2)

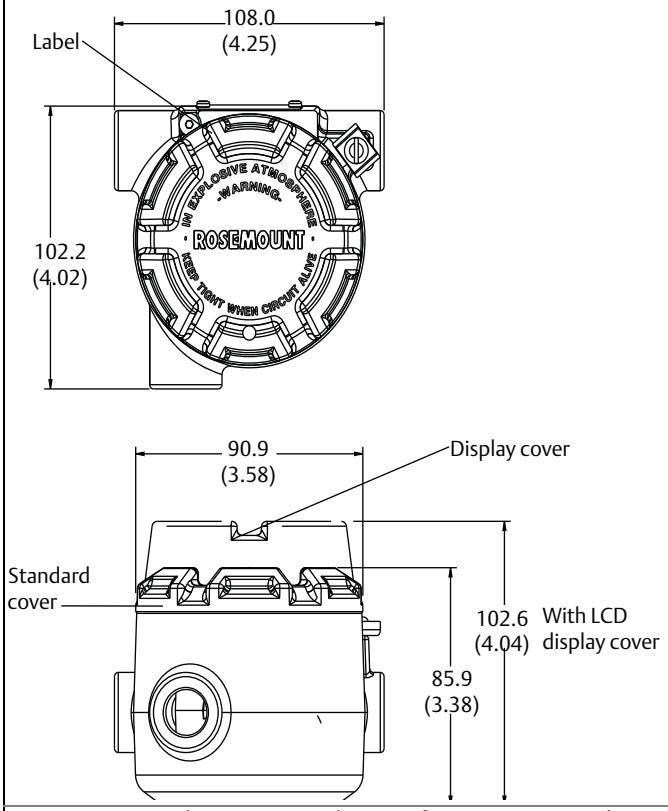

Rosemount 644 with Transient Protector (Option code T1)

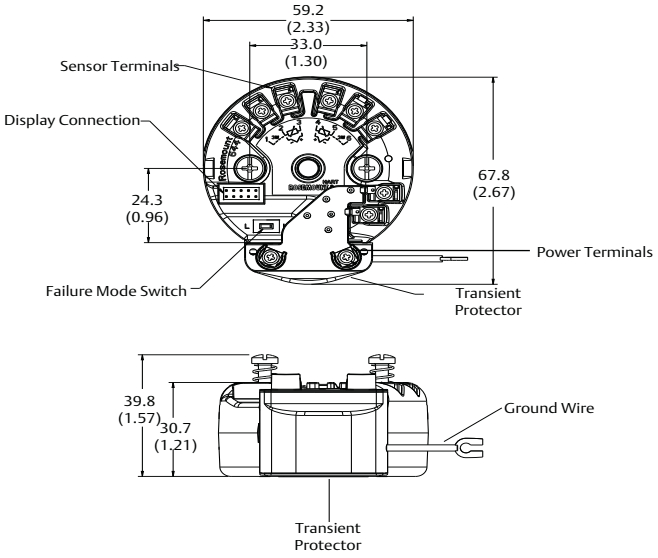

Note: Option code T1 requires the use of J1, J2, J3 or J4 enclosure option.

Dimensions are in millimeters (inches)

Stainless Steel Housing for Biotechnology, Pharmaceutical Industries, and Sanitary Applications

Sanitary Housing (Option Code S1, S2, S3, S4)

Standard Cover

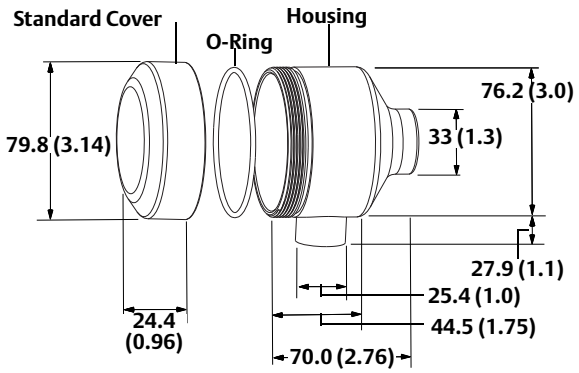

LCD Display Cover

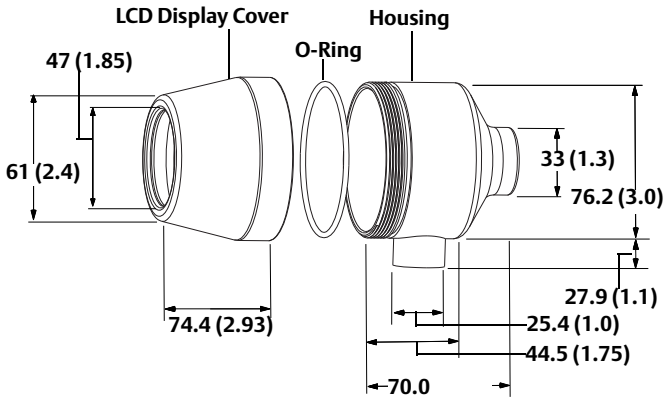

Dimensions are in millimeters (inches)

A.4 Ordering Information

The Rosemount 644 is a versatile temperature transmitter that delivers field reliability and advanced accuracy and stability to meet demanding process needs.



Transmitter features include:

- HART/4-20 mA with Selectable Revisions 5 and 7 (Option Code A), FOUNDATION fieldbus (Option Code F) or PROFIBUS PA (Option Code W)
- DIN A or Rail Mount mounting styles
- Dual Sensor Input (Option Code S)
- SIS SIL 2 Safety Certification (Option Code QT)
- LCD display suite
  - Local Operator Interface (Option Code M4)
  - LCD Display (Option Code M5)
- Advanced Diagnostics (Option Codes DC and DA1)
- Enhanced Transmitter Accuracy and Stability (Option Code P8)
- Transmitter-Sensor Matching (Option Code C2)
- Integral Transient Protection

Table A-5. Rosemount 644 Smart Temperature Transmitter Ordering Information

★ The Standard offering represents the most common models and options. These options should be selected for best delivery. The Expanded offering is manufactured after receipt of order and is subject to additional delivery lead time.

● = Available
– = Not Available

Model	Product Description					
644	Temperature Transmitter					
Transmitter Type						
Standard						Standard
H	DIN A Head Mount - Single Sensor Input					★
R	Rail Mount - Single Sensor Input					★
S	DIN A Head Mount - Dual Sensor Input (HART only)					★
Output		Head			Rail	
Standard						Standard
A	4–20 mA with digital signal based on HART protocol	●			●	★
F	FOUNDATION fieldbus digital signal (includes 2 AI function blocks and Backup Link Active Scheduler)	●			–	★
W	Profibus PA digital signal	●			–	★
Product Certifications		Head			Rail	
Hazardous Locations Certificates (consult factory for availability[1])		A	F	W	A	
Standard						Standard
NA	No approval	●	●	●	●	★
E5	FM Explosion-proof; Dust Ignition-proof	●	●	●	–	★

Table A-5. Rosemount 644 Smart Temperature Transmitter Ordering Information

★ The Standard offering represents the most common models and options. These options should be selected for best delivery. The Expanded offering is manufactured after receipt of order and is subject to additional delivery lead time.

● = Available
– = Not Available

Model	Product Description					
Product Certifications		Head			Rail	
		A	F	W	A	
Standard						Standard
I5	FM Intrinsically Safe; Non-incendive	●	●	●	●	★
K5	FM Explosion-proof; Intrinsically Safe; Non-incendive; Dust Ignition-proof	●	●	●	–	★
NK	IECEx Dust	●	–	–	–	★
KC	FM and CSA Intrinsically Safe and Non-incendive	–	–	–	●	★
KB	FM and CSA: Explosion-proof; Intrinsically Safe; Non-incendive; Dust Ignition-proof	●	–	–	–	★
KD	FM, CSA and ATEX Explosion-proof, Intrinsically Safe	●	●	●		★
I6	CSA Intrinsically Safe	●	●	●	●	★
K6	CSA Explosion-proof; Intrinsically Safe; Non-incendive; Dust Ignition-proof	●	●	●	–	★
I3	China Intrinsic Safety	●	–	–	–	★
E3	China Flameproof	●	●	●	–	★
N3	Chine Type n	●	–	–	–	★
E1	ATEX Flameproof	●	●	●	–	★
N1	ATEX Type n	●	●	●	–	★
NC	ATEX Type n Component	●	●	●	●	★
K1	ATEX Flameproof; Intrinsic Safety; Type n; Dust	●	●	●		★
ND	ATEX Dust Ignition–Proof	●	●	●	–	★
KA	CSA and ATEX: Explosion-proof; Intrinsically Safe; Non-incendive	●	–	–	–	★
I1	ATEX Intrinsic Safety	●	●	●	●	★
E7	IECEx Flameproof	●	●	●	–	★
I7	IECEx Intrinsic Safety	●	●	●	●	★
N7	IECEx Type n	●	●	●	–	★
NG	IECEx Type n Component	●	●	●	●	★
K7	IECEx Flameproof; Intrinsic Safety; Type n; Dust	●	–	–	–	★
I2	INMETRO Intrinsic Safety	●	–	–	–	★
E4	TIIS Flameproof	●	●	–	–	★
E2	INMETRO Flameproof	●	●	●	–	★

Options

		Head			Rail	
		A	F	W	A	
PlantWeb Control Functionality						
Standard						Standard
A01	FOUNDATION fieldbus Advanced Control Function Block Suite	–	●	–	–	★
PlantWeb Standard Diagnostic Functionality						
Standard						Standard
DC	Diagnostics: Hot Backup and Sensor Drift Alert	●	–	–	–	★

Table A-5. Rosemount 644 Smart Temperature Transmitter Ordering Information

★ The Standard offering represents the most common models and options. These options should be selected for best delivery. The Expanded offering is manufactured after receipt of order and is subject to additional delivery lead time.

● = Available
– = Not Available

PlantWeb Advanced Diagnostic Functionality									
Standard									Standard
DA1	HART Sensor and Process Diagnostic Suite: Thermocouple Diagnostic and Min/Max Tracking				●	–	–	–	★
Enclosure Options					Head			Rail	
					A	F	W	A	
Standard									Standard
	Housing Style	**Material**	**Entry Size**	**Diameter**					
J5 [2] [3]	Universal Junction Box, 2 entries	Aluminum	M20 X 1.5	3 in (76 mm)	●	●	●	–	★
J6[3]	Universal Junction Box, 2 entries	Aluminum	1/2–14 NPT	3 in (76 mm)	●	●	●	–	★
R1	Rosemount Connection Head, 2 entries	Aluminum	M20 X 1.5	3 in (76 mm)	●	●	●	–	★
R2	Rosemount Connection Head, 2 entries	Aluminum	1/2–14 NPT	3 in (76 mm)	●	●	●	–	★
J1[2]	Universal Junction Box, 3 entries	Aluminum	M20 X 1.5	3.5 in (89 mm)	●	●	●	–	★
J2	Universal Junction Box, 3 entries	Aluminum	1/2–14 NPT	3.5 in (89 mm)	●	●	●	–	★
Expanded									
J3[2]	Universal Junction Box, 3 entries	Cast SST	M20 X 1.5	3.5 in (89 mm)	●	●	●	–	
J4	Universal Junction Box, 3 entries	Cast SST	1/2–14 NPT	3.5 in (89 mm)	●	●	●	–	
J7[2][3]	Universal Junction Box, 2 entries	Cast SST	M20 X 1.5	3 in (76 mm)	●	●	●	–	
J8[3]	Universal Junction Box, 2 entries	Cast SST	1/2–14 NPT	3 in (76 mm)	●	●	●	–	
R3	Rosemount Connection Head, 2 entries	Cast SST	M20 X 1.5	3 in (76 mm)	●	●	●	–	
R4	Rosemount Connection Head, 2 entries	Cast SST	1/2–14 NPT	3 in (76 mm)	●	●	●	–	
S1	Connection Head, 2 entries	Polished SST	1/2–14 NPT	3 in (76 mm)	●	●	●	–	
S2	Connection Head, 2 entries	Polished SST	1/2–14 NPSM	3 in (76 mm)	●	●	●	–	
S3	Connection Head, 2 entries	Polished SST	M20 X 1.5	3 in (76 mm)	●	●	●	–	
S4	Connection Head, 2 entries	Polished SST	M20 X 1.5, M24 X 1.4	3 in (76 mm)	●	●	●	–	
Mounting Bracket									
Standard									Standard
B4[4]	316 SST U-bolt Mounting Bracket, 2-in pipe mount, 2g vibration rating with SST enclosure				●	●	●	–	★
B5[4]	“L” Mounting Bracket for 2-inch pipe or panel mounting, SST, 2g vibration rating				●	●	●	–	★
Display and Interface Options									
Standard									Standard
M4	LCD Display with Local Operator Interface				●	–	–	–	★
M5	LCD Display				●	●	●	–	★
Software Configuration									
Standard									Standard
C1	Custom Configuration of Date, Descriptor and Message (Requires CDS with order)				●	●	●	●	★
Enhanced Performance									
Standard									Standard
P8[5]	Enhanced Transmitter Accuracy and Stability				●	–	–	–	★

Table A-5. Rosemount 644 Smart Temperature Transmitter Ordering Information

★ The Standard offering represents the most common models and options. These options should be selected for best delivery. The Expanded offering is manufactured after receipt of order and is subject to additional delivery lead time.

● = Available
– = Not Available

Alarm Level Configuration						
Standard						Standard
A1	NAMUR alarm and saturation levels, high alarm	●	–	–	●	★
CN	NAMUR alarm and saturation levels, low alarm	●	–	–	●	★
C8	Low Alarm (Standard Rosemount Alarm and Saturation Values)	●	–	–	●	★
Line Filter		Head			Rail	
Standard						Standard
F5	50 Hz Line Voltage Filter	●	●	●	●	★
F6	60 Hz Line Voltage Filter	●	●	●	●	★
Sensor Trim						
		A	F	W	A	
Standard						Standard
C2	Transmitter-Sensor Matching - Trim to Specific Rosemount RTD Calibration Schedule (CVD constants)	●	●	●	●	★
5-Point Calibration Option						
Standard						Standard
C4	5-point calibration. *Use option code Q4 to generate a calibration certificate*	●	●	●	●	★
Calibration Certificate						
Standard						Standard
Q4	Calibration certificate. *3-Point calibration with certificate*	●	●	●	●	★
QP	Calibration Certification & Tamper Evident Seal	●	●	●	–	★
Quality Certification for Safety						
Standard						Standard
QT	Safety Certified to IEC 61508 with certificate of FMEDA data	●	–	–	–	★
Shipboard Certification						
SBS	American Bureau of Shipping (ABS) Type Approval	●	●	●	–	★
SBV	Bureau Veritas (BV) Type Approval	●	●	●	–	★
SDN	Det Norske Veritas (DNV) Type Approval	●	●	●	–	★
SLL	Lloyd's Register (LR) Type Approval	●	●	●	–	★
External Ground						
Standard						Standard
G1	External ground lug assembly (see "External Ground Screw Assembly" on page 128)	●	●	●	–	★
Transient Protection						
Standard						Standard
T1[(6)]	Integral Transient Protector	●	–	–	–	★
Cable Gland Option						
Standard						Standard
G2	Cable gland (7.5 mm - 11.99 mm)	●	●	●	–	★
G7	Cable gland, M20x1.5, Ex e, Blue Polyamide (5 mm - 9 mm)	●	●	●	–	★

Table A-5. Rosemount 644 Smart Temperature Transmitter Ordering Information

★ The Standard offering represents the most common models and options. These options should be selected for best delivery.
The Expanded offering is manufactured after receipt of order and is subject to additional delivery lead time.

● = Available
– = Not Available

Cover Chain Option						
Standard						Standard
G3	Cover chain	●	●	●	–	★
Conduit Electrical Connector						
Standard						Standard
GE(7)	M12, 4-pin, Male Connector (eurofast®)	●	●	●	–	★
GM(7)	A size Mini, 4-pin, Male Connector (minifast®)	●	●	●	–	★
External Label						

(1) See Table A-6 for the validity of enclosures with individual approval options.

(2) When ordered with XA, 1/2-in. NPT enclosure will come equipped with an M20 adapter with the sensor installed as a process ready.
(3) Enclosure ships equipped with 50.8 mm (2-in) SST pipe bracket for mounting.
(4) Bracket assembly only available with 3-Conduit housings J1 and J2.
(5) See Table A-4 on page A-112 for Enhanced Accuracy specifications.
(6) Transient Protection option requires the use of J1, J2, J3, or J4.
(7) Available with Intrinsically Safe approvals only. For FM Intrinsically Safe or non-incendive approval (option code I5), install in accordance with Rosemount drawing 03151-1009.

Table A-6. 644 Enclosure options valid with individual approval codes.

Code	Hazardous Location Approval Description	Enclosure options valid with approval
NA	No approval	J1, J2, J3, J4, R1, R2, R3, R4, J5, J6, J7, J8, S1, S2, S3, S4
E5	FM Explosion-proof; Dust Ignition-proof	J1, J2, J3, J4, R1, R2, R3, R4, J5, J6, J7, J8
I5	FM Intrinsically Safe; Non-incendive	J1, J2, J3, J4, R1, R2, R3, R4, J5, J6, J7, J8
K5	FM Explosion-proof; Intrinsically Safe; Non-incendive; Dust Ignition-proof	J1, J2, J3, J4, R1, R2, R3, R4, J5, J6, J7, J8
NK	IECEx Dust	J1, J2, J3, J4, R1, R2, R3, R4, J5, J6, J7, J8
KC	FM and CSA Intrinsically Safe and Non-incendive	Only available with Rail mount device
KB	FM and CSA: Explosion-proof; Intrinsically Safe; Non-incendive; Dust Ignition-proof	J2, J4, R2, R4, J6, J8
KD	FM, CSA and ATEX Explosion-proof, Intrinsically Safe	J2, J4, R2, R4, J6, J8
I6	CSA Intrinsically Safe	J1, J2, J3, J4, R1, R2, R3, R4, J5, J6, J7, J8
K6	CSA Explosion-proof; Intrinsically Safe; Non-incendive; Dust Ignition-proof	J2, J4, R2, R4, J6, J8
I3	China Intrinsic Safety	J1, J2, J3, J4, R1, R2, R3, R4, J5, J6, J7, J8
E3	China Flameproof	R1, R2, R3, R4, J5, J6, J7, J8
N3	China Type n	R1, R2, R3, R4, J5, J6, J7, J8
E1	ATEX Flameproof	J1, J2, J3, J4, R1, R2, R3, R4, J5, J6, J7, J8
N1	ATEX Type n	J1, J2, J3, J4, R1, R2, R3, R4, J5, J6, J7, J8
NC	ATEX Type n Component	None
K1	ATEX Flameproof; Intrinsic Safety; Type n; Dust	J1, J2, J3, J4, R1, R2, R3, R4, J5, J6, J7, J8
ND	ATEX Dust Ignition-Proof	J1, J2, J3, J4, R1, R2, R3, R4, J5, J6, J7, J8
KA	CSA and ATEX: Explosion-proof; Intrinsically Safe; Non-incendive	J2, J4, R2, R4, J6, J8
I1	ATEX Intrinsic Safety	J1, J2, J3, J4, R1, R2, R3, R4, J5, J6, J7, J8, S1, S2, S3, S4
E7	IECEx Flameproof	J1, J2, J3, J4, R1, R2, R3, R4, J5, J6, J7, J8
I7	IECEx Intrinsic Safety	J1, J2, J3, J4, R1, R2, R3, R4, J5, J6, J7, J8, S1, S2, S3, S4
N7	IECEx Type n	J1, J2, J3, J4, R1, R2, R3, R4, J5, J6, J7, J8
NG	IECEx Type n Component	None
K7	IECEx Flameproof; Intrinsic Safety; Type n; Dust	J1, J2, J3, J4, R1, R2, R3, R4, J5, J6, J7, J8
I2	INMETRO Intrinsic Safety	J1, J2, J3, J4, R1, R2, R3, R4, J5, J6, J7, J8
E4	TIIS Flameproof	J6
E2	INMETRO Flameproof	R1, R2, R3, R4, J5, J6, J7, J8
K2	INMETRO Flameproof, Intrinsic Safety	R1, R2, R3, R4, J5, J6, J7, J8

Table A-7. Enclosure Spares

Description	Part Number
Universal Head, Aluminum, Standard cover, 2-conduit - M20 entries	00644-4420-0002
Universal Head, Aluminum, Display cover, 2-conduit - M20 entries	00644-4420-0102
Universal Head, Aluminum, Standard cover, 2-conduit - 1/2 - 14 NPT entries	00644-4420-0001
Universal Head, Aluminum, Display cover, 2-conduit - 1/2 - 14 NPT entries	00644-4420-0101
Universal Head, SST, Standard cover, 2-conduit - M20 entries	00644-4433-0002
Universal Head, SST, Display cover, 2-conduit - M20 entries	00644-4433-0102
Universal Head, SST, Standard cover, 2-conduit - 1/2 - 14 NPT entries	00644-4433-0001
Universal Head, SST, Display cover, 2-conduit - 1/2 - 14 NPT entries	00644-4433-0101
Connection Head, Aluminum, Standard cover, 2-conduit - M20 x 1/2 ANPT entries	00644-4410-0021
Connection Head, Aluminum, Display cover, 2-conduit - M20 x 1/2 ANPT entries	00644-4410-0121
Connection Head, Aluminum, Standard cover, 2-conduit - 1/2 - 14 NPT x 1/2 ANPT entries	00644-4410-0011
Connection Head, Aluminum, Display cover, 2-conduit - 1/2 - 14 NPT x 1/2 ANPT entries	00644-4410-0111
Connection Head, SST, Standard cover, 2-conduit - M20 X 1/2 ANPT entries	00644-4411-0021
Connection Head, SST, Display cover, 2-conduit - M20 X 1/2 ANPT entries	00644-4411-0121
Connection Head, SST, Standard cover, 2-conduit - 1/2 - 14 NPT x 1/2 ANPT entries	00644-4411-0011
Connection Head, SST, Display cover, 2-conduit - 1/2 - 14 NPT x 1/2 ANPT entries	00644-4411-0111
Connection Head, Polished SST, Standard cover, 2-conduit - M20 x 1.5 entries	00079-0312-0033
Connection Head, Polished SST, Display cover, 2-conduit - M20 x 1.5 entries	00079-0312-0133
Connection Head, Polished SST, Standard cover, 2-conduit - M20 x 1.5 / M24 x 1.5 entries	00079-0312-0034
Connection Head, Polished SST, Display cover, 2-conduit - M20 x 1.5 / M24 x 1.5 entries	00079-0312-0134
Connection Head, Polished SST, Standard cover, 2-conduit -1/2 -14 NPT entries	00079-0312-0011
Connection Head, Polished SST, Display cover, 2-conduit - 1/2 -14 NPT entries	00079-0312-0111
Connection Head, Polished SST, Standard cover, 2-conduit - 1/2 -14 NPSM entries	00079-0312-0022
Connection Head, Polished SST, Display cover, 2-conduit - 1/2 -14 NPSM entries	00079-0312-0122
Universal Head, Aluminum, Standard cover, 3-conduit - M20 entries	00644-4439-0001
Universal Head, Aluminum, Display cover, 3-conduit - M20 entries	00644-4439-0101
Universal Head, Aluminum, Standard cover, 3-conduit - 1/2 - 14 NPT entries	00644-4439-0002
Universal Head, Aluminum, Display cover, 3-conduit - 1/2 - 14 NPT entries	00644-4439-0102
Universal Head, SST, Standard cover, 3-conduit - M20 entries	00644-4439-0003
Universal Head, SST, Display cover, 3-conduit - M20 entries	00644-4439-0103
Universal Head, SST, Standard cover, 3-conduit - 1/2 - 14 NPT entries	00644-4439-0004
Universal Head, SST, Display cover, 3-conduit - 1/2 - 14 NPT entries	00644-4439-0104

Table A-8. Display Kit Spares

Description	Part Number
Display only	
644 HART LCD Display (option M5)	00644-7630-0001
644 HART Local Operator Interface (option M4)	00644-7630-1001
644 FOUNDATION Fieldbus LCD Display (option M5)	00644-4430-0002
644 Profibus PA LCD Display (option M5)	00644-4430-0002
644 HART Legacy display Kit (option M5 - Device Rev 7)	00644-4430-0002
Display with Aluminum Meter Cover	
Rosemount 644 HART LCD Display (option M5)(1)	00644-7630-0011
Rosemount 644 HART LCD Display (option M5)(2)	00644-7630-0111

Table A-8. Display Kit Spares

Display with Aluminum Cover	
Rosemount 644 HART Local Operator Interface (option M4)(1)	00644-7630-1011
Rosemount 644 HART Local Operator Interface (option M4)(2)	00644-7630-1111
Rosemount 644 FOUNDATION Fieldbus LCD Display (option M5)(1)	00644-4430-0001
Rosemount 644 Profibus PA LCD Display (option M5)(1)	00644-4430-0001
Rosemount 644 HART Legacy display Kit (option M5)(1)	00644-4430-0001
Display with SST Meter Cover	
Rosemount 644 HART LCD Display (option M5)(1)	00644-7630-0021
Rosemount 644 HART LCD Display (option M5)(2)	00644-7630-0121
Rosemount 644 HART Local Operator Interface (option M4)(1)	00644-7630-1021
Rosemount 644 HART Local Operator Interface (option M4)(2)	00644-7630-1121
Rosemount 644 FOUNDATION Fieldbus LCD Display (option M5)(1)	00644-4430-0011
Rosemount 644 Profibus PA LCD Display (option M5)(1)	00644-4430-0011
Rosemount 644 HART Legacy display Kit (option M5)(1)	00644-4430-0011

(1) Covers provided are compatible with the 3-in (76 mm) Universal Junction Box and Rosemount Connection Head enclosure styles.

(2) Cover provided is compatible with the 3.5-in (89 mm) Universal Junction Box enclosure style.

Table A-9. Transient Protection Spares

Description	Part Number
Transient Protector without Enclosure	00644-4437-0001
Transient Protector with Universal Head, Aluminum, Standard cover, 3-conduit - M20	00644-4438-0001
Transient Protector with Universal Head, Aluminum, Display cover, 3-conduit - M20	00644-4438-0101
Transient Protector with Universal Head, Aluminum, Standard cover, 3-conduit - $^1/_2$ NPT	00644-4438-0002
Transient Protector with Universal Head, Aluminum, Display cover, 3-conduit - $^1/_2$ NPT	00644-4438-0102
Transient Protector with Universal Head, SST, Standard cover, 3-conduit - M20	00644-4438-0003
Transient Protector with Universal Head, SST, Display cover, 3-conduit - M20	00644-4438-0103
Transient Protector with Universal Head, SST, Standard cover, 3-conduit - $^1/_2$ NPT	00644-4438-0004
Transient Protector with Universal Head, SST, Display cover, 3-conduit - $^1/_2$ NPT	00644-4438-0104

Table A-10. Miscellaneous Accessories

Description	Part Number
Ground Screw Assembly Kit	00644-4431-0001
Mounting Screws and Springs	00644-4424-0001
Hardware Kit for mounting a Rosemount 644 Head mount to a DIN rail (includes clips for symmetrical and asymmetrical rails)	00644-5301-0010
U-Bolt mounting Kit for Universal Housing	00644-4423-0001
Universal Clip for Rail or Wall Mount	03044-4103-0001
24 Inches of Symmetric (Top Hat) Rail	03044-4200-0001
24 Inches of Asymmetric (G) Rail	03044-4201-0001
Ground Clamp for symmetric or asymmetric rail	03044-4202-0001
Snap Rings Kit (used for assembly to a DIN sensor)	00644-4432-0001
Cover Clamp Assembly	00644-4434-0001
Terminal Block, 13mm M4 Mounting Screws	00065-0305-0001
U-bolt Mounting Bracket, 2-in pipe mount, 2g vibration rating with SST enclosure - 316 SST (option B4)	00644-7610-0001
L - Mounting Bracket for 2-inch pipe or panel mounting, SST, 2g vibration rating (option B5)	00644-7611-0001

Note
For additional options (e.g. “K” codes), please contact your local Emerson Process Management representative.

A.4.1 Configuration

Transmitter Configuration

The transmitter is available with standard configuration settings for HART. The configuration settings may be changed in the field with DeltaV®, with AMS Device Manager, or with any field communicator.

Standard HART Configuration

Unless specified, the transmitter will be shipped as follows:

Sensor Type	RTD, Pt 100 (α=0.00385, 4-wire)
4 mA Value	0 °C
20 mA Value	100 °C
Output	Linear with temperature
Saturation Levels	3.9 / 20.5 mA
Damping	5 sec.
Line Voltage Filter	50 Hz
Alarm	High (21.75 mA)
LCD (when installed)	Engineering Units and mA
Tag	See “Tagging” on page 127.
HART Revision	5

A.4.2 Tagging

Hardware Tag

- 13 characters total
- Tags are located on adhesive labels permanently affixed to the transmitter

Software Tag

HART Revision 5

A HART Revision 5 transmitter can store up to 8 characters for the HART software tag and defaults to the first 8 characters of the Hardware Tag.

HART Revision 7

A HART Revision 7 transmitter can store the same 8 character tag as the Revision 5 but has a additional and separate Long Software Tag that can be configured for up to 32 characters. Long Software Tag is available when option code HR7 is ordered.

A.4.3 Considerations

Special Mounting Considerations

See "Mounting Kits for 644 Head Mount" on page 116 for the special hardware that is available to:

- Mount a 644H to a DIN rail.
- Retrofit a new 644H to replace an existing 644H transmitter in an existing threaded sensor connection head.

External Ground Screw Assembly

The external ground screw assembly can be ordered by specifying code G1 when an enclosure is specified. However, some approvals include the ground screw assembly in the transmitter shipment, hence it is not necessary to order code G1. The table below identifies which approval options include the external ground screw assembly and which do not.

Option Code	External Ground Screw Assembly Included?
E5, I1, I2, I5, I6, I7, K5, K6, NA, I3, KB	No–Order option code G1
E1, E2, E3, E4, E7, K7, N1, N7, ND, K1, K2, KA, NK, N3, KD, T1	Yes

Custom Configuration

Custom configurations are to be specified when ordering. This configuration must be the same for all sensors. The following table lists the necessary requirements to specify a custom configuration.

	Option Code	Customization Available
HART	**C1**: Factory Configuration Data (CDS required) Also needs option code: **...DC** **...DC** **...M4 or M5**	■ **Date**: day/month/year ■ **Descriptor**: 8 alphanumeric characters ■ **Message**: 32 alphanumeric characters ■ **Hardware Tag**: 13 Characters ■ **Software Tag**: 8 Characters ■ Sensor Type and Connection ■ Measurement Range and Units ■ Damping Value ■ **Failure Mode:** High or Low ■ **Hot Backup:** Mode and PV ■ **Sensor Drift Alert:** Mode, Limit and Units ■ **Display Configuration**: Choose what will be shown on the LCD display ■ **Custom Alarm and saturation levels**: Choose custom High and Low Alarm and Saturation levels ■ **Security information:** Write Protection, HART Lock and Local Operator Interface Password
	C2:Transmitter – Sensor Matching	■ The transmitters are designed to accept Callendar-Van Dusen constants from a calibrated RTD. Using these constants, the transmitter generates a custom curve to match the sensor-specific curve. Specify a Series 65, 65, or 78 RTD sensor on the order with a special characterization curve (V or X8Q4 option). These constants will be programmed into the transmitter with this option.
	A1, CN, or C8: Alarm Level Configuration	■ **A1:** NAMUR Alarm and Saturation Levels, with High Alarm configured ■ **CN:** NAMUR Alarm and Saturation Levels, with Low Alarm configured ■ **C8:** Low Alarm (Standard Rosemount Alarm and Saturation Values)
	Q4: Three-Point Calibration with Certificate	■ Calibration certificate. Three-Point calibration at 0, 50 and 100% with certificate.
	C4: Five-Point Calibration	■ Will include five-point calibration at 0, 25, 50, 75, and 100% analog and digital output points. Use with Calibration Certificate Q4
	HR7: HART Revision configuration	■ Your 644 Head mount device is HART revision selectable. Order the HR7 code to configure your device to operate in HART Revision 7 mode. Your device is also configurable in the field. Refer to the 644 Quick Installation Guide or Reference Manual for more instructions. ■ **Long Software Tag:** 32 Characters

A.5 Specifications and Reference Data for 644 HART Head Mount

(Device Revision 7 or previous)

A.5.1 Functional Specifications

Inputs

User-selectable; sensor terminals rated to 42.4 Vdc. See “Accuracy” on page 109 for sensor options.

Output

Single 2-wire device with either 4-20 mA/HART, linear with temperature or input. Device supports protocol revision HART 5.

Isolation

Input/output isolation tested to 600 Vrms.

Local Display

The optional five-digit integral LCD Display includes a floating or fixed decimal point. It can also display engineering units (°F, °C, °R, K, W, and mV), mA, and percent of span. The display can be configured to alternate between selected display options. Display settings are preconfigured at the factory according to the standard transmitter configuration. They can be reconfigured in the field using a compliant Field Communicator.

Humidity Limits

0–95% relative humidity

Update Time

≤ 0.5 sec.

Accuracy (default configuration) PT 100

HART (0-100 °C): ±0.18 °C

A.5.2 Physical Specifications

Electrical Connections

Model	Power and Sensor Terminals
644H	Compression screws permanently fixed to terminal block

Field Communicator Connections

Communication Terminals	
644H	Clips permanently fixed to terminal block

Materials of Construction

Electronics Housing and Terminal Block	
644H	*Noryl*® glass reinforced
Enclosure (Options J5, J6)	
Housing	Low-copper aluminum
Paint	Polyurethane
Cover O-ring	Buna-N

Materials of Constructions (Stainless Steel Housing for Biotechnology, Pharmaceutical Industries, and Sanitary Applications)

Housing and Standard Meter Cover

- 316 SST

Cover O-Ring

- Buna-N

Mounting

The 644H installs in a connection head or universal head mounted directly on a sensor assembly, apart from a sensor assembly using a universal head, or to a DIN rail using an optional mounting clip.

Special Mounting Considerations

See "Mounting Kits for 644 Head Mount" on page 116 for the special hardware that is available to:

- Mount a 644H to a DIN rail. (see page 114)
- Retrofit a new 644H to replace an existing 644H transmitter in an existing threaded sensor connection head.

Weight

Code	Options	Weight
644H	HART, Head Mount Transmitter	95 g (3.39 oz)
644H	FOUNDATION fieldbus, Head Mount Transmitter	92 g (3.25 oz)
644H	Profibus PA Head Mount Transmitter	92 g (3.25 oz)
644R	HART, Rail Mount Transmitter	174 g (6.14 oz)
M5	LCD Display	35 g (1.34 oz)
J5, J6	Universal Head, Standard Cover	577 g (20.35 oz)
J5, J6	Universal Head, Meter Cover	667 g (23.53 oz)
J7, J8	SST Universal Head, Std. Cover	1620 g (57.14 oz)
J7, J8	SST Universal Head, Meter Cover	1730 g (61.02 oz)

Weight (Stainless Steel Housing for Biotechnology, Pharmaceutical Industries, and Sanitary Applications)

Option Code	Standard Cover	Meter Cover
S1	840 g (27 oz)	995 g (32 oz)
S2	840 g (27 oz)	995 g (32 oz)
S3	840 g (27 oz)	995 g (32 oz)
S4	840 g (27 oz)	995 g (32 oz)

Enclosure Ratings (644H)

All available enclosures are Type 4X, IP66, and IP68.

Sanitary Housing Surface

Surface finish is polished to 32 RMA. Laser etched product marking on housing and standard covers.

A.5.3 Performance Specifications

EMC (ElectroMagnetic Compatibility) NAMUR NE 21 Standard

The 644H HART meets the requirements for NAMUR NE 21 Rating.

Susceptibility	Parameter	Influence
		HART
ESD	■ 6 kV contact discharge ■ 8 kV air discharge	None
Radiated	■ 80 – 1000 MHz at 10 V/m AM	< 1.0%
Burst	■ 1 kV for I.O.	None
Surge	■ 0.5 kV line–line ■ 1 kV line–ground (I.O. tool)	None
Conducted	■ 100 kHz to 80 MHz at 10 V	< 1.0%

CE Electromagnetic Compatibility Compliance Testing

The 644 is compliant with Directive 2004/108/EC. Meets the criteria under IEC 61326:2006

Power Supply Effect

Less than ±0.005% of span per volt

Stability

RTDs and thermocouples have a stability of ±0.15% of output reading or 0.15 °C (whichever is greater) for 24 months

Self Calibration

The analog-to-digital measurement circuitry automatically self-calibrates for each temperature update by comparing the dynamic measurement to extremely stable and accurate internal reference elements.

Vibration Effect

The 644 is tested to the following specifications with no effect on performance per IEC 60770-1, 1999:

Frequency	Vibration
10 to 60 Hz	0.21 mm displacement
60 to 2000 Hz	3 g peak acceleration

Sensor Connections

Rosemount 644 Sensor Connections Diagram

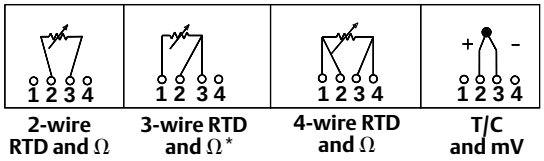

* Rosemount Inc. provides 4-wire sensors for all single element RTDs. You can use these RTDs in 3-wire configurations by leaving the unneeded leads disconnected and insulated with electrical tape.

Tagging

Hardware

- 13 characters total
- Tags are adhesive labels affixed to the side of the transmitter
- Permanently attached to transmitter
- Character height is 1/16-in (1.6 mm)

Software

- The transmitter can store up to 8 characters for the HART protocol
- Order Software Tag with C1 option code

A.5.4 4–20 mA / HART Specifications

Power Supply

External power supply required. Transmitters operate on 12.0 to 42.4 Vdc transmitter terminal voltage (with 250 ohm load, 18.1 Vdc power supply voltage is required). Transmitter power terminals rated to 42.4 Vdc.

Load Limitations

Maximum Load = 40.8 X (Supply Voltage - 12.0)(1)

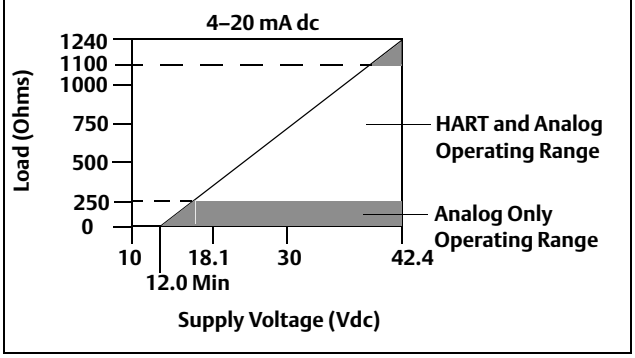

(1) Without transient protection (optional).

Note
HART Communication requires a loop resistance between 250 and 1100 ohms. Do not communicate with the transmitter when power is below 12 Vdc at the transmitter terminals.

Temperature Limits

	Operating Limit	Storage Limit
With LCD(1)	–40 to 185 °F –20 to 85 °C	–50 to 185 °F –45 to 85 °C
Without LCD	–40 to 185 °F –40 to 85 °C	–60 to 248 °F –50 to 120 °C

(1) LCD may not be readable and display updates will be slower at temperatures below -4 °F (-20 °C).

Hardware and Software Failure Mode

The 644 features software driven alarm diagnostics and an independent circuit which is designed to provide backup alarm output if the microprocessor software fails. The alarm direction (HI/LO) is user-selectable using the failure mode switch. If failure occurs, the position of the switch determines the direction in which the output is driven (HI or LO). The switch feeds into the digital-to-analog (D/A) converter, which drives the proper alarm output even if the microprocessor fails. The values at which the transmitter software drives its output in failure mode depends on whether it is configured to standard, custom, or NAMUR-compliant (NAMUR recommendation NE 43, June 1997) operation. Table A-1 on page A-108 shows the configuration alarm ranges.

	Standard	NAMUR- NE 43 Compliant
Linear Output:	$3.9 \leq I^{(1)} \leq 20.5$	$3.8 \leq I \leq 20.5$
Fail High:	$21.75 \leq I \leq 23$	$21.5 \leq I \leq 23$
Fail Low:	$3.5 \leq I \leq 3.75$	$3.5 \leq I \leq 3.6$

(1) I = Process Variable (current output).

Custom Alarm and Saturation Level

Custom factory configuration of alarm and saturation level is available with option code C1 for valid values. These values can also be configured in the field using a Field Communicator.

Turn-on Time

Performance within specifications in less than 5.0 seconds after power is applied, when damping value is set to 0 seconds.

External Transient Protection

The Rosemount 470 prevents damage from transients induced by lightning, welding, or heavy electrical equipment. For more information, refer to the 470 Product Data Sheet (document number 00813-0100-4191).

Configuration

For standard configuration information, see “Configuration” on page 127.

Table A-11. 644 HART legacy display kits

	Kit Part number
Display Only	00644-4430-0002
Display and Aluminum, Housing Cover(1)	00644-4430-0001
Display and SST Housing Cover(1)	00644-4430-0011

(1) Covers provided are compatible with the 3 in (76mm) Universal Junction Box and Rosemount Connection Head enclosure styles.

Appendix B Product Certifications

Approved manufacturing locations . . . . . **page 137**
European Directive Information . . . . . **page 137**
Hazardous Locations Certifications . . . . . **page 137**

B.1 Approved manufacturing locations

Emerson Process Management Rosemount Division. – Chanhassen, MN

Emerson Process Management Asia Pacific Limited – Singapore

Emerson Process Management GmbH & Co. - Karlstein, Germany

Emerson Process Management (India) Private Ltd. – Mumbai, India

Emerson Process Management Brazil - Sorocaba, Brazil

Emerson Process Management, Dubai - Emerson FZE

Beijing Rosemount Far East Instrument Co., Limited. - Beijing, China

B.2 European Directive Information

A copy of the EC Declaration of Conformity can be found at the end of the Quick Start Guide. The most recent revision of the EC Declaration of Conformity can be found at www.rosemount.com.

B.2.1 Ordinary Location Certification from FM Approvals

As standard, the transmitter has been examined and tested to determine that the design meets the basic electrical, mechanical, and fire protection requirements by FM Approvals, a nationally recognized test laboratory (NRTL) as accredited by the Federal Occupational Safety and Health Administration (OSHA).

B.2.2 Hazardous Locations Certifications

North America

E5 FM Explosionproof, Dust-Ignitionproof
Certificate: 3006278
Standards Used: FM Class 3600: 2011, FM Class 3615: 2006, FM Class 3616: 2011, FM Class 3810: 2005, NEMA-250: 250: 2003, ANSI/IEC 60529: 2004
Markings: **XP** CL I, DIV 1, GP B, C, D; **DIP** CL II / III, GP E, F, G; T5(-50 °C ≤ Ta ≤ +85 °C); Type 4X, IP66

I5 FM Intrinsic Safety and Nonincendive
Certificate: 3008880 [Fieldbus/Profibus]
Standards Used: FM Class 3600: 1998, FM Class 3610: 2010, FM Class 3611: 2004, FM Class 3810: 2005, NEMA - 250: 1991
Markings: **IS** CL I / II / III, DIV I, GP A, B, C, D, E, F, G; T4A(-50 °C ≤ Ta ≤ +60 °C); **NI** CL I, DIV 2, GP A, B, C, D;
T6(-60 °C ≤ Ta ≤ 70 °C); T5(-50 °C ≤ Ta ≤ 85 °C); when installed per Rosemount drawing 00644-2075;

Special Conditions for Safe Use (X):

1. When no enclosure option is selected, the Model 644 Temperature Transmitter shall be installed in an enclosure meeting the requirements of ANSI/ISA S82.01 and S82.03 or other applicable ordinary location standards.
2. FM combination option code K5 is only applicable with Rosemount J5 Universal Head (M20 x 1.5) or Rosemount J6 Universal Head (1/2-14 NPT) enclosure.
3. Enclosure option has to be selected to maintain a Type 4X rating

Certificate: 3044581 [HART 5, HART 7]
Standards Used: FM Class 3600: 2011, FM Class 3610: 2010, FM Class 3611: 2004, FM Class 3810: 2005, ANSI/NEMA - 250: 1991; ANSI/IEC 60529: 2004; ANSI/ISA 60079-0: 2009; ANSI/ISA 60079-11: 2009
Markings: **IS** CL I / II / III, DIV I, GP A, B, C, D, E, F, G; **IS** Class I, Zone 0 A Ex ia IIC; T4(-50 °C ≤ Ta ≤ +80); T5(-50 °C ≤ Ta ≤ +40); **NI** CL I, DIV 2, GP A, B, C, D; T5(-50 °C ≤ Ta ≤ 80 °C), T6(-50 °C ≤ Ta ≤ 40 °C); when installed per Rosemount drawing 00644-2071; Type 4X; IP68

Special Conditions for Safe Use (X):

1. When no enclosure option is selected, the Model 644 Temperature Transmitter shall be installed in a final enclosure meeting type of protection IP20 and meeting the requirements of ANSI/ISA 61010-1 and ANSI/ISA 60079-0.
2. The Model 644 optional housings may contain aluminum and is considered a potential risk of ignition by impact or friction. Care must be taken into account during installation and use to prevent impact and friction.

I6 CSA Intrinsic Safety and Division 2
Certificate: 1091070
Standards Used: CAN/CSA C22.2 No. 0-M10, CSA Std C22.2 No. 25-1966, CAN/CSA-C22.2 No. 94-M91, CSA Std C22.2 No. 142-M1987, CAN/CSA-C22.2 No. 157-92, CSA Std C22.2 No. 213-M1987, C22.2 No 60529-05
Markings [Fieldbus]: **IS** CL I DIV 1, GP A, B, C, D; T4 (-50 °C ≤ Ta ≤ +60 °C), (-50 °C ≤ Ta ≤ +80 °C); when installed per Rosemount drawing 00644-2076; **CL I DIV 2** GP A, B, C, D; T5(-50 °C ≤ Ta ≤ +85 °C)
Markings [HART 5/HART 7]: **IS** CL I GP A, B, C, D; T4(-50 °C ≤ Ta ≤ +80 °C), T5(-50 °C ≤ Ta ≤ +40 °C), T5(-50 °C ≤ Ta ≤ +50 °C), T6(-50 °C ≤ Ta ≤ +40 °C); **CL I, DIV 2** GP A, B, C, D; when installed per Rosemount drawing 00644-2072

K6 CSA Explosionproof, Dust-Ignitionproof, Intrinsic Safety and Division 2
Certificate: 1091070
Standards Used: CAN/CSA C22.2 No. 0-M10, CSA Std C22.2 No. 25-1966, CSA Std. C22.2 No. 30-M1986, CAN/CSA-C22.2 No. 94-M91, CSA Std C22.2 No. 142-M1987, CAN/CSA-C22.2 No. 157-92, CSA Std C22.2 No. 213-M1987, C22.2 No 60529-05
Markings: **XP** CL I, DIV 1, GP B, C, D; **DIP** CL II / III, DIV 1, GP E, F, G; T5(-50 °C ≤ Ta ≤ +85 °C); Type 4X, IP 66/68
Markings [Fieldbus/Profibus]: **IS** CL I DIV 1, GP A, B, C, D; T4 (-50 °C ≤ Ta ≤ +60 °C), (-50 °C ≤ Ta ≤ +80 °C); when installed per Rosemount drawing 00644-2076; CL I DIV 2 GP A, B, C, D; T5(-50 °C ≤ Ta ≤ +85 °C)

Markings [HART 5/HART 7]: IS CL I GP A, B, C, D; T4(-50 °C ≤ Ta ≤ +80 °C), T5(-50 °C ≤ Ta ≤ +40 °C), T5(-50 °C ≤ Ta ≤ +50 °C), T6(-50 °C ≤ Ta ≤ +40 °C); CL I, DIV 2 GP A, B, C, D; when installed per Rosemount drawing 00644-2072

Europe

E1 ATEX Flameproof
Certificate: FM12ATEX0065X
Standards Used: EN 60079-0: 2012, EN 60079-1: 2007, EN 60529:1991 +A1:2000
Markings: ⟨Ex⟩ II 2 G Ex d IIC T6...T1 Gb, T6(-50 °C ≤ Ta ≤ +40 °C), T5...T1(-50 °C ≤ Ta ≤ +60 °C);
See Certificate (Table B-2)

Special Conditions for Safe Use (X):

1. See certificate for ambient temperature range.
2. The non-metallic label may store an electrostatic charge and become a source of ignition in Group III environments.
3. Guard the LCD cover against impact energies greater than 4 joules.
4. Consult the manufacturer if dimensional information on the flameproof joints is necessary.

Table B-1. Input Parameters

Loop	
U_i = 30 V	
I_i = 150 mA	Ta < 80°
= 170 mA	Ta < 70°
= 190 mA	Ta < 60°
Pi = 0.67 W	T6 (-60 °C ≤ Ta ≤ 40 °C), T5 (-60 °C ≤ Ta ≤ 50 °C)
= 0.8 W	T5 (-60 °C ≤ Ta ≤ 40 °C), T4 (-60 °C ≤ Ta ≤ 80 °C)
Ci = 3.3 nF	
Li = 0	
Sensor	
U_o = 13.6 V	
I_o = 80 mA	
P_o = 80 mW	
C_i = 0.075 µF	C_o = 0.816 µF Group IIC
	C_o= 5.196 µF Group IIB
	C_o = 18.596 µF Group IIA
L_i = 0	L_o = 5.79 mH Group IIC
	L_o = 23.4 mH Group IIB
	L_o= 48.06 mH Group IIA

I1 ATEX Intrinsic Safety
Certificate No.: Baseefa03ATEX0499X [Fieldbus/Profibus]; BAS00ATEX1033X [HART 5]; Baseefa12ATEX0101X [HART 7]
Standards Used: EN 60079-0: 2012 (2011 for HART 7); EN 60079-11:2012;
Markings: ⟨Ex⟩ II G Ex ia IIC T4 Ga [Fieldbus/Profibus]; ⟨Ex⟩ II 1 G Ex ia IIC T6...T4 Ga [HART 5/HART 7]
See Certificate (Table B-3).

Special Conditions for Safe Use (X):

1. The equipment must be installed in an enclosure which affords it a degree of protection of at least IP20 in accordance with the requirements of IEC 60529. Non-metallic enclosures must have a surface resistance of less than 1GΩ; light alloy or zirconium enclosures must be protected from impact and friction when installed in a Zone 0 environment.

N1 ATEX Type n - with enclosure
Certificate: BAS00ATEX3145
Standards Used: EN 60079-0:2012, EN 60079-15:2010
Markings: ⟨Ex⟩ II 3 G, Ex nA IIC T5 Gc (-40 °C ≤ Ta ≤ 70 °C)

NC ATEX Type n - no enclosure
Certificate: Baseefa13ATEX0093X [Fieldbus/Profibus/HART 5], Baseefa12ATEX0102U [HART 7]
Standards Used: EN60079-0:2012 (2011 for HART 7), EN60079-15:2010
Markings: ⟨Ex⟩ II 3 G, Ex nA IIC T5 Gc [Fieldbus/Profibus/HART 5]; T5(-40 °C ≤ Ta ≤ +70 °C)
⟨Ex⟩II 3 G Ex nA IIC T6...T5 Gc [HART 7]; T6(-60 °C ≤ Ta ≤ +40 °C), T5(-60 °C ≤ Ta ≤ +85 °C)

Special Conditions for Safe Use (X):

1. The Model 644 Temperature Transmitter must be installed in a suitably certified enclosure such that it is afforded a degree of protection of at least IP54 in accordance with IEC 60529 and EN 60079-15.

ND ATEX Dust
Certificate: FM12ATEX0065X
Standards Used: EN 60079-0: 2012, EN 60079-31: 2009, EN 60529:1991 +A1:2000
Markings: ⟨Ex⟩ II 2D, Ex tb IIIC T130 °C Db, (-40 °C ≤ Ta ≤ +70 °C); IP66

See Certificate (Table B-2).

Special Conditions for Safe Use (X):

1. See certificate for ambient temperature range.
2. The non-metallic label may store an electrostatic charge and become a source of ignition in Group III environments.
3. Guard the LCD cover against impact energies greater than 4 joules.
4. Consult the manufacturer if dimensional information on the flameproof joints is necessary.

International

E7 IECEX Flameproof
Certificate: IECEx FMG 12.0022X
Standards Used: IEC 60079-0:2011, IEC 60079-1:2007-04, IEC 60079-31:2008
Markings: Ex d IIC T6...T1 Gb, T6 (-50 °C ≤ Ta ≤ +40 °C),T5...T1(-50 °C ≤ Ta ≤ +60 °C)
Ex tb IIIC T130 °C Db, (-40 °C ≤ Ta ≤ +70 °C); IP66
See Certificate (Table B-3)

Special Conditions for Safe Use (X):

1. See certificate for ambient temperature range.
2. The non-metallic label may store an electrostatic charge and become a source of ignition in Group III environments.
3. Guard the LCD cover against impact energies greater than 4 joules.
4. Consult the manufacturer if dimensional information on the flameproof joints is necessary.

I7 IECEX Intrinsic Safety
Certificate: IECEx BAS 07.0053X [Fieldbus/Profibus/HART 5]; IECEx BAS 12.0069X [HART 7];
Standards Used: IEC 60079-0: 2011; IEC 60079-11: 2011;
Markings: Ex ia IIC T6...T4 Ga
See Certificate (Table B-3)

Special Conditions for Safe Use (X):

1. The equipment must be installed in an enclosure which affords it a degree of protection of at least IP20 in accordance with the requirements of IEC 60529. Non-metallic enclosures must have a surface resistance of less than 1GΩ; light alloy or zirconium enclosures must be protected from impact and friction when installed in a Zone 0 environment.

N7 IECEx Type n - with enclosure
Certificate: IECEx BAS 07.0055
Standards Used: IEC 60079-0:2011, IEC 60079-15:2010
Markings: Ex nA IIC T5/T6 Gc; T5(-60 °C ≤ Ta ≤ +80 °C), T6(-60 °C ≤ Ta ≤ +60 °C)

NG ATEX Type n - no enclosure
Certificate: Baseefa13ATEX0093X [Fieldbus/Profibus/HART 5], Baseefa12ATEX0102U [HART 7]
Standards Used: EN60079-0:2012 (2011 for HART 7), EN60079-15:2010
Markings: Ex nA IIC T5 Gc [Fieldbus/Profibus/HART 5]; T5(-40 °C ≤ Ta ≤ +70 °C)
Ex nA IIC T6...T5 Gc [HART 7]; T6(-60 °C ≤ Ta ≤ +40 °C), T5 (-60 °C ≤ Ta ≤ +85 °C)

Special Conditions for Safe Use (X):

1. The Model 644 Temperature Transmitter must be installed in a suitably certified enclosure such that it is afforded a degree of protection of at least IP54 in accordance with IEC 60529 and EN 60079-15.

NK IECEx Dust
Certificate: IECEx FMG 12.0022X
Standards Used: IEC 60079-0:2011, IEC 60079-1:2007-04, IEC 60079-31:2008
Markings: Ex d IIC T6...T1 Gb, T6(-50 °C ≤ Ta ≤ +40°C), T5...T1(-50 °C ≤ Ta ≤ +60 °C)
Ex tb IIIC T130 °C Db, (-40 °C ≤ Ta ≤ +70 °C); IP66
See Certificate (Table B-2)

Special Conditions for Safe Use (X):

1. See certificate for ambient temperature range.
2. The non-metallic label may store an electrostatic charge and become a source of ignition in Group III environments.
3. Guard the LCD cover against impact energies greater than 4 joules.
4. Consult the manufacturer if dimensional information on the flameproof joints is necessary.

Brazil

E2 INMETRO Flameproof
Certificate: CEPEL 02.0095X
Standards Used: ABNT NBR IEC 60079-0:2008, ABNT NBR IEC 60079-1:2009, ABNT NBR IEC 60529:2009
Markings: Ex d IIC T*Gb
See Certificate (Table B-2)

Special Conditions for Safe Use (X):

1. When installing the temperature transmitter 644H, an adapter should be used to install the temperature sensor, as per Rosemount drawing 00644-1047.
2. The equipment must be installed with adequate insulation at high temperatures when the maximum ambient temperature at the place of installation is greater than 60 °C, and the cable insulation having a temperature of at least 90 °C, to be compatible with the operating temperature of the equipment.

I2 INMETRO Intrinsic Safety
Certificate: CEPEL 02.0096X
Standards Used: ABNT NBR IEC 60079-0:2008, ABNT NBR IEC 60079-11:2009, ABNT NBR IEC 60079-26:2008, ABNT NBR IEC 60529:2009
Markings: Ex ia IIC T*Ga IP66W
See Certificate (Table B-3)

Special Conditions for Safe Use (X):

1. The apparatus must be installed in an enclosure which affords it a degree of protection of at least IP20.7.
2. Light allow or zirconium enclosures must be protected from impact and friction when installed.
3. When the maximum ambient temperature at the place of installation is greater than 50 °C, the equipment shall be installed with adequate insulation cables the minimum temperature of 90 °C.

China

E3 China Flameproof
Certificate: GYJ111385
Standards Used: GB3836.1-2000, GB3836.2-2000, GB12476.1-2000
Markings: Ex d IIC T6

Special Conditions for Safe Use (X):

1. Temperature Assembly using temperature sensor type 65, 68, 75, 183, 185 are certified.
2. The ambient temperature range is:

Gas/Dust	Ambient Temperature
Gas	-40 °C ≤ Ta ≤ +65 °C
Dust	-40 °C ≤ Ta ≤ +85 °C

3. The earth connection facility in the enclosure should be connected reliably.
4. During installation, use and maintain in explosive gas atmospheres, observe the warning “Do not open when energized”.

   During installation, use and maintain in explosive dust atmosphere, observe the warning “Do not open when an explosive dust atmosphere is present”.
5. During installation, there should be no mixture harmful to flameproof housing.
6. During installation in hazardous location, cable glands, conduits and blanking plugs, certified by state-appointed inspection bodies with Ex d II C, DIP A20 IP66 degree, should be used.
7. Maintenance should be done in a non-hazardous location.
8. During installation, use and maintain in explosive dust atmosphere, product enclosure should be cleaned to avoid dust accumulation, but compressed air should not be used.
9. End users is not permitted to change any components inside, but to settle the problem in conjunction with manufacturer to avoid damage to the product.
10. During installation, use and maintenance of this product, observe the following standards:

    GB3836.13-1997 “Electrical apparatus for explosive gas atmospheres Part 13: Repair and overhaul for apparatus used in explosive gas atmospheres”

    GB3836.15-2000 “Electrical apparatus for explosive gas atmospheres Part 15: Electrical installations in hazardous area (other than mines)”

    GB3836.16-2006 “Electrical apparatus for explosive gas atmospheres Part 16: Inspection and maintenance of electrical installation (other than mines)”

    GB50257-1996 “Code for construction and acceptance of electric device for explosion atmospheres and fire hazard electrical equipment installation engineering”.

    GB15577-1995 “Safe regulation for explosive dust atmospheres”

    GB12476.2-2006 “Electrical apparatus for use in the presence of combustible dust Part 1-2: Electrical apparatus protected by enclosures and surface temperature limitation-Selection, installation and maintenance”

I3 China Intrinsic Safety
Certificate: GYJ111384X
Standards Used: GB3836.1-2000, GB3836.4-2000
Markings: Ex ia IIC T4/T5/T66

Special Conditions for Safe Use (X):

1. The ambient temperature range is:

When Options do not select Enhance Performance

Transmitter Output	Maximum input power: (W)	T code	Ambient Temperature
A	0.67	T6	-60 °C ≤ Ta ≤ +40 °C
	0.67	T5	-60 °C ≤ Ta ≤+50 °C
	1	T5	-60 °C ≤ Ta ≤ +40 °C
	1	T4	-60 °C ≤ Ta ≤ +80 °C
F or W	1.3	T4	-60 °C ≤ Ta ≤ +60 °C
	5.32	T4	-60 °C ≤ Ta ≤ +60 °C

When Options select Enhanced Performance

Maximum input power: (W)	T code	Ambient Temperature
0.67	T6	-60 °C ≤ Ta ≤ +40 °C
0.67	T5	-60 °C ≤ Ta ≤ +50 °C
1.3	T4	-60 °C ≤ Ta ≤ +40 °C
5.32	T4	-60 °C ≤ Ta ≤ +80 °C

2. Parameters:

When Options do not select Enhanced Performance

Terminals of power supply (+, -)

Transmitter output	Maximum input voltage: U_i (V)	Maximum input current: I_i (mA)	Maximum input power: P_i (W)	Maximum internal parameters:	
				C_i (nF)	L_i(mH)
A	30	200	0.67/1	10	0
F, W	30	300	1.3	2.1	0
F, W (FISCO)	17.5	380	5.32	2.1	0

Terminals of sensor (1,2,3,4)

Transmitter output	Maximum output voltage: U_o (V)	Maximum output current: I_o (mA)	Maximum output power: P_o (W)	Maximum internal parameters:	
				C_o (nF)	L_o(mH)
A	13.6	80	0.08	75	0
F, W	13.9	23	0.079	7.7	0

When Options select Enhanced Performance

Terminals of power supply (+, -)

Maximum input voltage: U_i (V)	Maximum input current: I_i (mA)	Maximum input power: P_i (W)	Maximum internal parameters:	
			C_i (nF)	L_i(mH)
30	150 (Ta ≤ +80 °C)	0.67/0.8	3.3	0
	170 (Ta ≤ +70 °C)			
	190 (Ta ≤ +60 °C)			

Terminals of sensor (1,2,3,4)

Maximum output voltage: U_o (V)	Maximum output current: I_o (mA)	Maximum output power: P_o (W)	Gas Group	Maximum internal parameters:	
				C_o (nF)	L_o(mH)
13.6	80	0.08	IIC	0.816	5.79
			IIB	5.196	23.4
			IIA	18.596	48.06

3. This product complies to the requirements for FISCO field devices specified in IEC60079-27: 2008. For the connection of an intrinsically safe circuit in accordance FISCO model, FISCO parameters of this product are as above.

4. The product should be used with Ex-certified associated apparatus to establish explosion protection system that can be used in explosive gas atmospheres. Wiring and terminals should comply with the instruction manual of the product and associated apparatus.

5. The cables between this product and associated apparatus should be shielded cables (the cables must have insulated shield). The shielded has to be grounded reliably in non-hazardous area.

6. End users are not permitted to change any components insides, but to settle the problem in conjunction with manufacturer to avoid damage to the product.

7. During installation, use and maintenance of this product, observe the following standards:

GB3836.13-1997 “Electrical apparatus for explosive gas atmospheres Part 13: Repair and overhaul for apparatus used in explosive gas atmospheres”

GB3836.15-2000 “Electrical apparatus for explosive gas atmospheres Part 15: Electrical installations in hazardous area (other than mines)”

GB3836.16-2006 “Electrical apparatus for explosive gas atmospheres Part 16: Inspection and maintenance of electrical installation (other than mines)”

GB50257-1996 “Code for construction and acceptance of electric device for explosion atmospheres and fire hazard electrical equipment installation engineering”.

N3 China Type n
Certificate: GYJ101421
Standards Used: GB3836.1-2000, GB3836.8-2003
Markings: Ex nA nL IIC T5/T6

Special Conditions for Safe Use (X):

1. The relation among T code, ambient temperature range is as following:

   When Options do not select Enhanced Performance:

T code	Ambient temperature
T5	-40 °C ≤ Ta ≤ +70 °C

   When Options select Enhanced Performance:

T code	Ambient temperature
T6	-60 °C ≤ Ta ≤ +40 °C
T5	-60 °C ≤ Ta ≤ +85 °C

2. Maximum input voltage: 42.4V.

3. Cable glands, conduit or blanking plugs, certified by NEPSI with Ex e or Ex n protection type and appropriate thread type and IP54 degree, should be used on external connections and redundant cable entries.

4. Maintenance should be done in non-hazardous location.

5. End users are not permitted to change any components inside, but to settle the problem in conjunction with manufacturer to avoid damage to the product

6. During installation, use and maintenance of this product, observe the following standards:

   GB3836.13-1997 “Electrical apparatus for explosive gas atmospheres Part 13: Repair and overhaul for apparatus used in explosive gas atmospheres”

   GB3836.15-2000 “Electrical apparatus for explosive gas atmospheres Part 15: Electrical installations in hazardous area (other than mines)”

   GB3836.16-2006 “Electrical apparatus for explosive gas atmospheres Part 16: Inspection and maintenance of electrical installation (other than mines)”

   GB50257-1996 “Code for construction and acceptance of electric device for explosion atmospheres and fire hazard electrical equipment installation engineering”

Japan

E4 Japan Flameproof
Certificate: TC15744 (w/ meter, w/o TC), TC15745 (w/o meter, w/o sensor),
Markings: Ex d IIC T6

Certificate: TC15910 (w/o meter, w/ TC), TC15911 (w/ meter, w/ TC),
TC15912 (w/o meter, w/ sensor), TC1593 (w/ meter, w/ sensor)
Markings: Ex d IIB + H_2 T4

Combinations

K1 combination of E1, I1, N1, NC, and ND

K2 combination of E2 and I2

K5 combination of E5 and I5

K7 combination of E7, I7, N7, NG, and NK

KA combination of K1 and K6

KB combination of K5 and K6

KC combination of I5 and I6

KD combination of E1, E5, K6, I1, I5, I6

Tables

Table B-2. Process Temperatures

Temperature Class	Ambient Temperature	Process Temperature w/o LCD Cover (°C)			
		No ext.	3"	6"	9"
T6	-50 °C to +40 °C	55	55	60	65
T5	-50 °C to +60 °C	70	70	70	75
T4	-50 °C to +60 °C	100	110	120	130
T3	-50 °C to +60 °C	170	190	200	200
T2	-50 °C to +60 °C	280	300	300	300
T1	-50 °C to +60 °C	440	450	450	45

Table B-3. Entity Parameters and Temperature Classifications

	Fieldbus/Profibus	HART 5	HART 7
Voltage Ui (V)	30	30	30
Current Ii (mA)	300	200	150 for Ta ≤ 80 °C 170 for Ta ≤ 70 °C 190 for Ta ≤ 60 °C
Power Pi (W)	1.3 @ T4 (-50 °C ≤ Ta ≤+60 °C)	.67 @ T6(-60 °C ≤ Ta ≤ +40 °C) .67 @ T5(-60 °C ≤ Ta ≤ +50 °C) 1.0 @ T5(-60 °C ≤ Ta ≤ +40 °C) 1.0 @ T4(-60 °C ≤ Ta ≤ +80 °C)	.67 @ T6(-60 °C ≤ Ta ≤ +40 °C) .67 @ T5(-60 °C ≤ Ta ≤ +50 °C) .80 @ T5(-60 °C ≤ Ta ≤ +40 °C) .80 @ T4(-60 °C ≤ Ta ≤ +80 °C)
Capacitance Ci (nF)	2.1	10	3.3
Inductance Li (mH)	0	0	0

Figure B-1. CSA Intrinsic Safety Installation Drawing 00644-2072. Rev AA

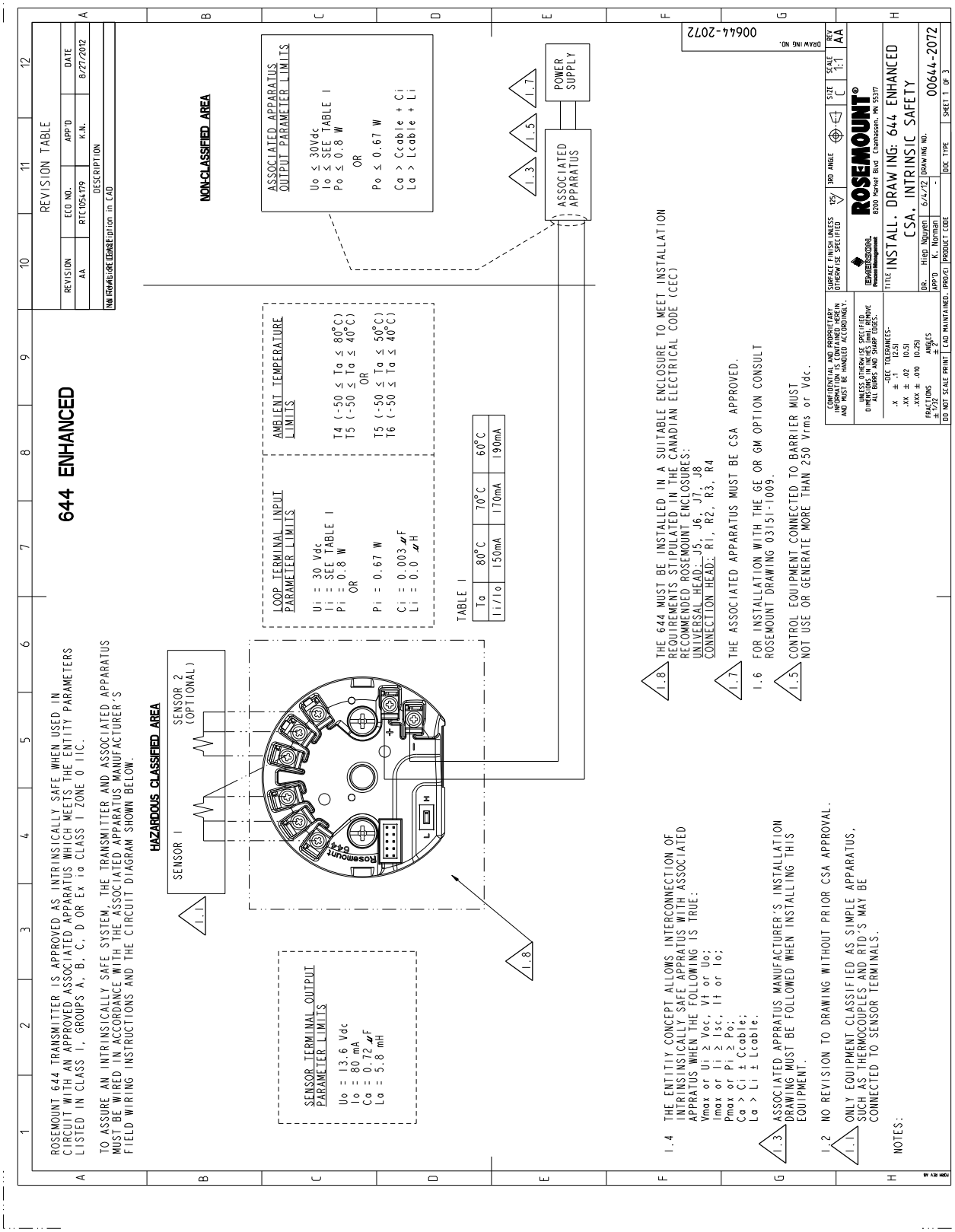

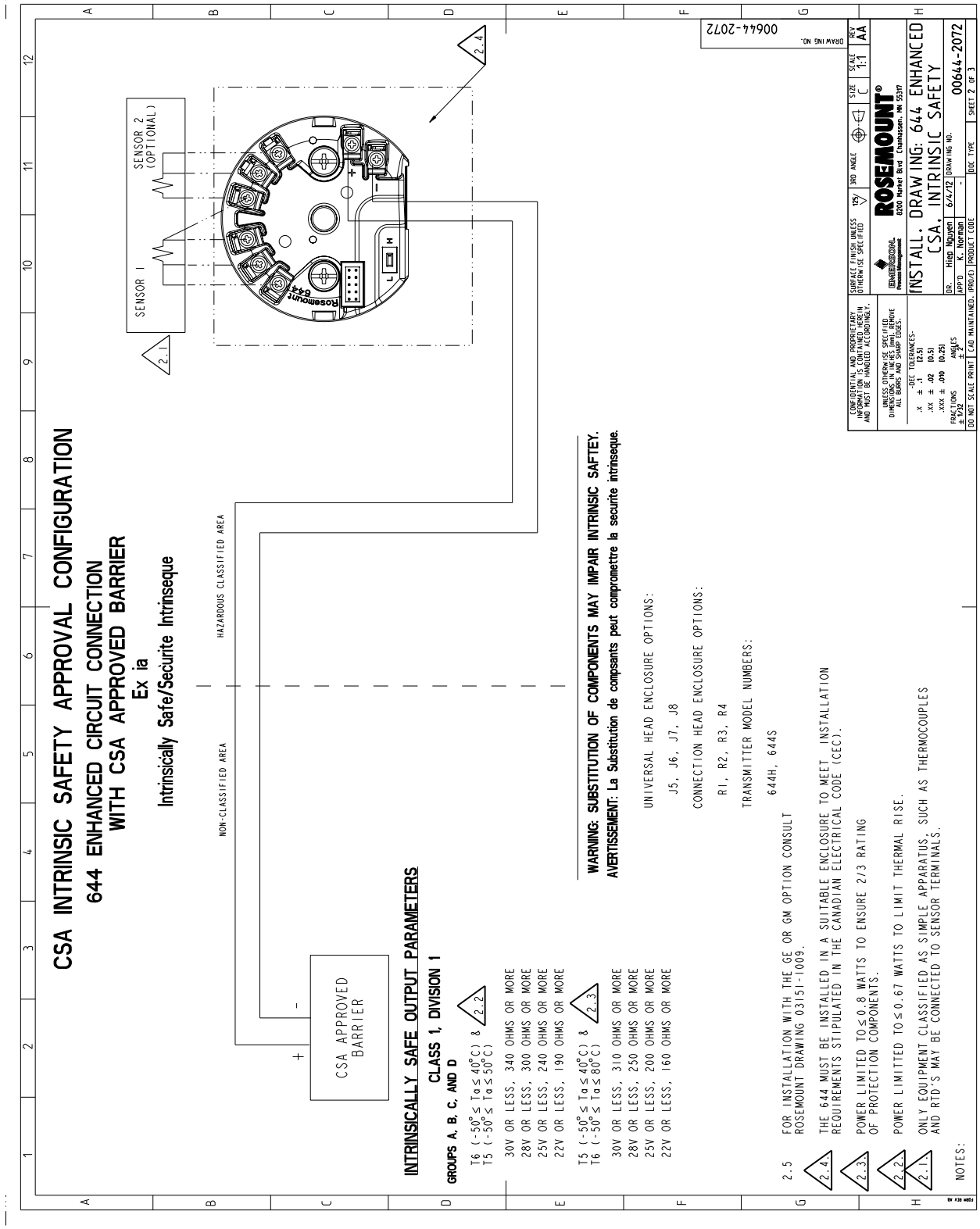
CSA INTRINSIC SAFETY APPROVAL CONFIGURATION
644 ENHANCED CIRCUIT CONNECTION
WITH CSA APPROVED BARRIER
Ex ia
Intrinsically Safe/Securite Intrinseque
NON-CLASSIFIED AREA
HAZARDOUS CLASSIFIED AREA
CSA APPROVED BARRIER
SENSOR 1
SENSOR 2 (OPTIONAL)
INTRINSICALLY SAFE OUTPUT PARAMETERS
CLASS 1, DIVISION 1
GROUPS A, B, C, AND D
T6 (-50°C ≤ Ta ≤ 40°C) & T5 (-50°C ≤ Ta ≤ 50°C)
30V OR LESS, 340 OHMS OR MORE
28V OR LESS, 300 OHMS OR MORE
25V OR LESS, 240 OHMS OR MORE
22V OR LESS, 190 OHMS OR MORE
T5 (-50°C ≤ Ta ≤ 40°C) & T6 (-50°C ≤ Ta ≤ 80°C)
30V OR LESS, 310 OHMS OR MORE
28V OR LESS, 250 OHMS OR MORE
25V OR LESS, 200 OHMS OR MORE
22V OR LESS, 160 OHMS OR MORE
WARNING: SUBSTITUTION OF COMPONENTS MAY IMPAIR INTRINSIC SAFTEY.
AVERTISSEMENT: La Substitution de composants peut compromettre la securite intrinseque.
UNIVERSAL HEAD ENCLOSURE OPTIONS:
J5, J6, J7, J8
CONNECTION HEAD ENCLOSURE OPTIONS:
R1, R2, R3, R4
TRANSMITTER MODEL NUMBERS:
644H, 644S
2.5 FOR INSTALLATION WITH THE GE OR GM OPTION CONSULT ROSEMOUNT DRAWING 03151-1009.
2.4 THE 644 MUST BE INSTALLED IN A SUITABLE ENCLOSURE TO MEET INSTALLATION REQUIREMENTS STIPULATED IN THE CANADIAN ELECTRICAL CODE (CEC).
2.3 POWER LIMITED TO ≤ 0.8 WATTS TO ENSURE 2/3 RATING OF PROTECTION COMPONENTS.
2.2 POWER LIMITED TO ≤ 0.67 WATTS TO LIMIT THERMAL RISE.
2.1 ONLY EQUIPMENT CLASSIFIED AS SIMPLE APPARATUS, SUCH AS THERMOCOUPLES AND RTD'S MAY BE CONNECTED TO SENSOR TERMINALS.
NOTES:
DRAWING NO. 00644-2072
ROSEMOUNT
8200 Market Blvd Chanhassen, MN 55317
INSTALL. DRAWING: 644 ENHANCED CSA, INTRINSIC SAFETY
00644-2072
SHEET 2 OF 3

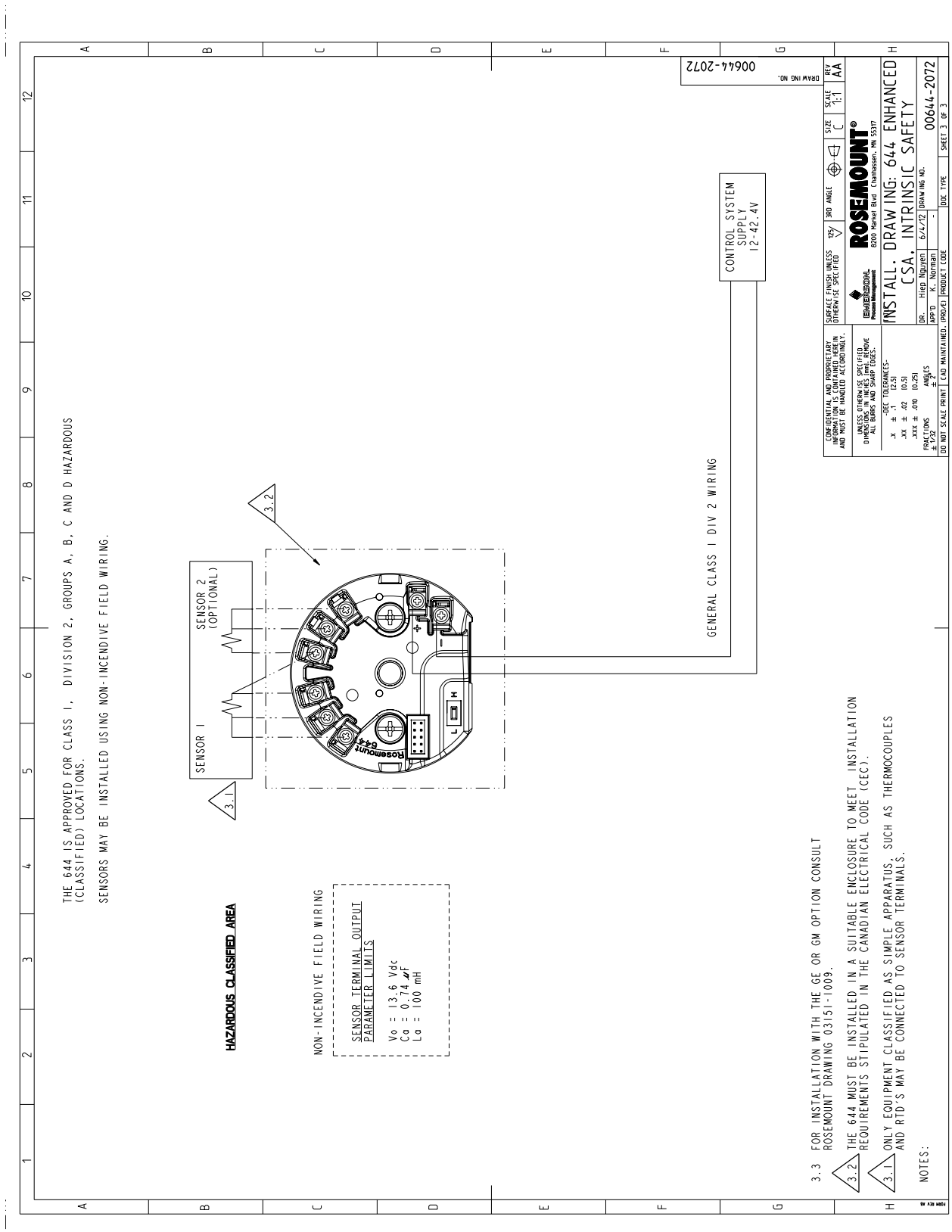
THE 644 IS APPROVED FOR CLASS I, DIVISION 2, GROUPS A, B, C AND D HAZARDOUS (CLASSIFIED) LOCATIONS.
SENSORS MAY BE INSTALLED USING NON-INCENDIVE FIELD WIRING.
HAZARDOUS CLASSIFIED AREA
NON-INCENDIVE FIELD WIRING
SENSOR TERMINAL OUTPUT PARAMETER LIMITS
Vo = 13.6 Vdc
Ca = 0.74 µF
La = 100 mH
SENSOR 1
SENSOR 2 (OPTIONAL)
3.1
3.2
GENERAL CLASS I DIV 2 WIRING
CONTROL SYSTEM SUPPLY 12-42.4V
3.3 FOR INSTALLATION WITH THE GE OR GM OPTION CONSULT ROSEMOUNT DRAWING 03151-1009.
3.2 THE 644 MUST BE INSTALLED IN A SUITABLE ENCLOSURE TO MEET INSTALLATION REQUIREMENTS STIPULATED IN THE CANADIAN ELECTRICAL CODE (CEC).
3.1 ONLY EQUIPMENT CLASSIFIED AS SIMPLE APPARATUS, SUCH AS THERMOCOUPLES AND RTD'S MAY BE CONNECTED TO SENSOR TERMINALS.
NOTES:
DRAWING NO. 00644-2072
REV AA
SIZE C
SCALE 1:1
ROSEMOUNT
8200 Market Blvd Chanhassen, MN 55317
INSTALL. DRAWING: 644 ENHANCED CSA, INTRINSIC SAFETY
00644-2072
SHEET 3 OF 3

Figure B-2. CSA Intrinsic Safety Installation Drawing 00644-1064, Rev. AB

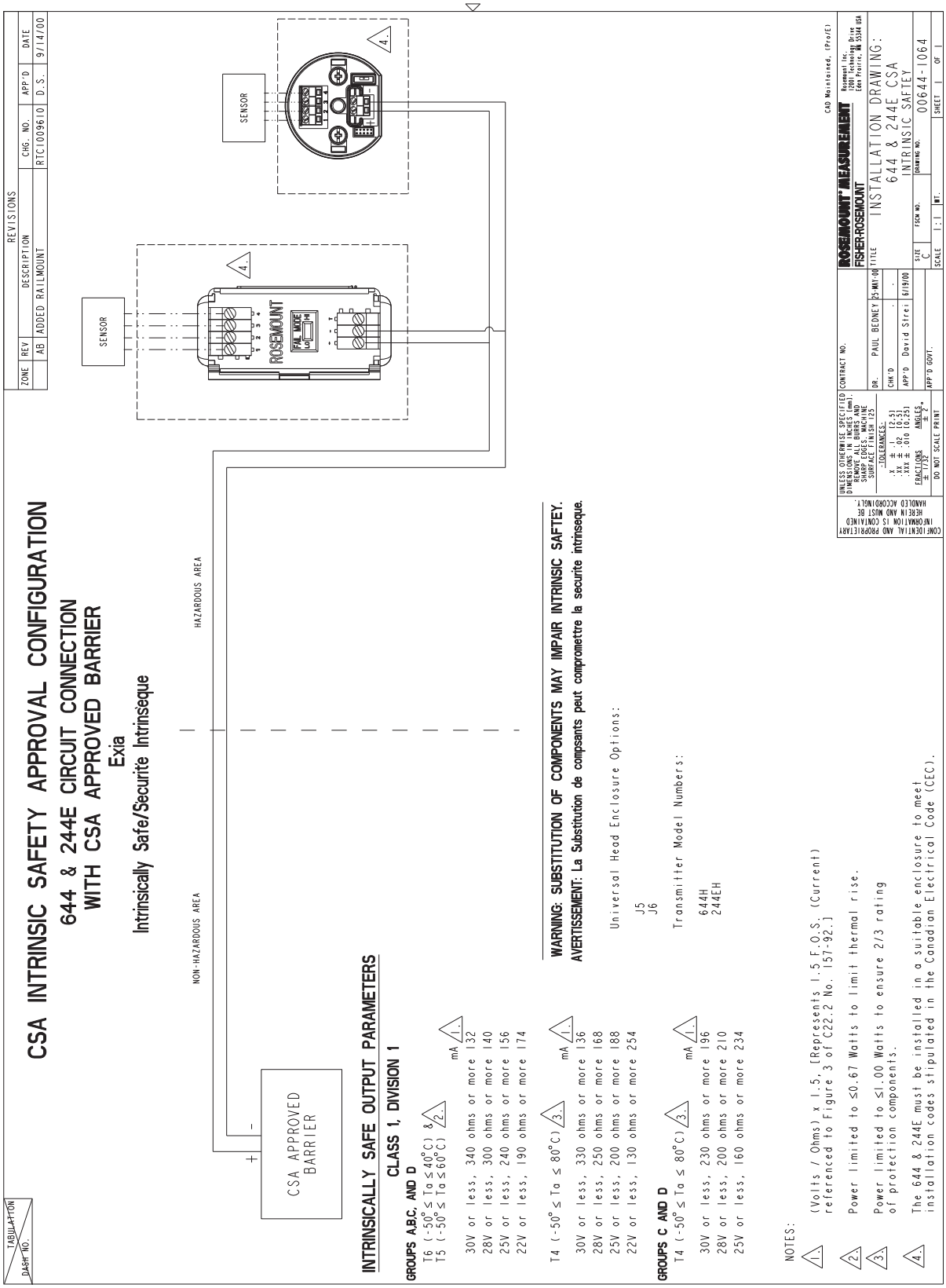

Figure B-3. CSA Explosion-Proof Installation Drawing 00644-1059, Rev. AJ

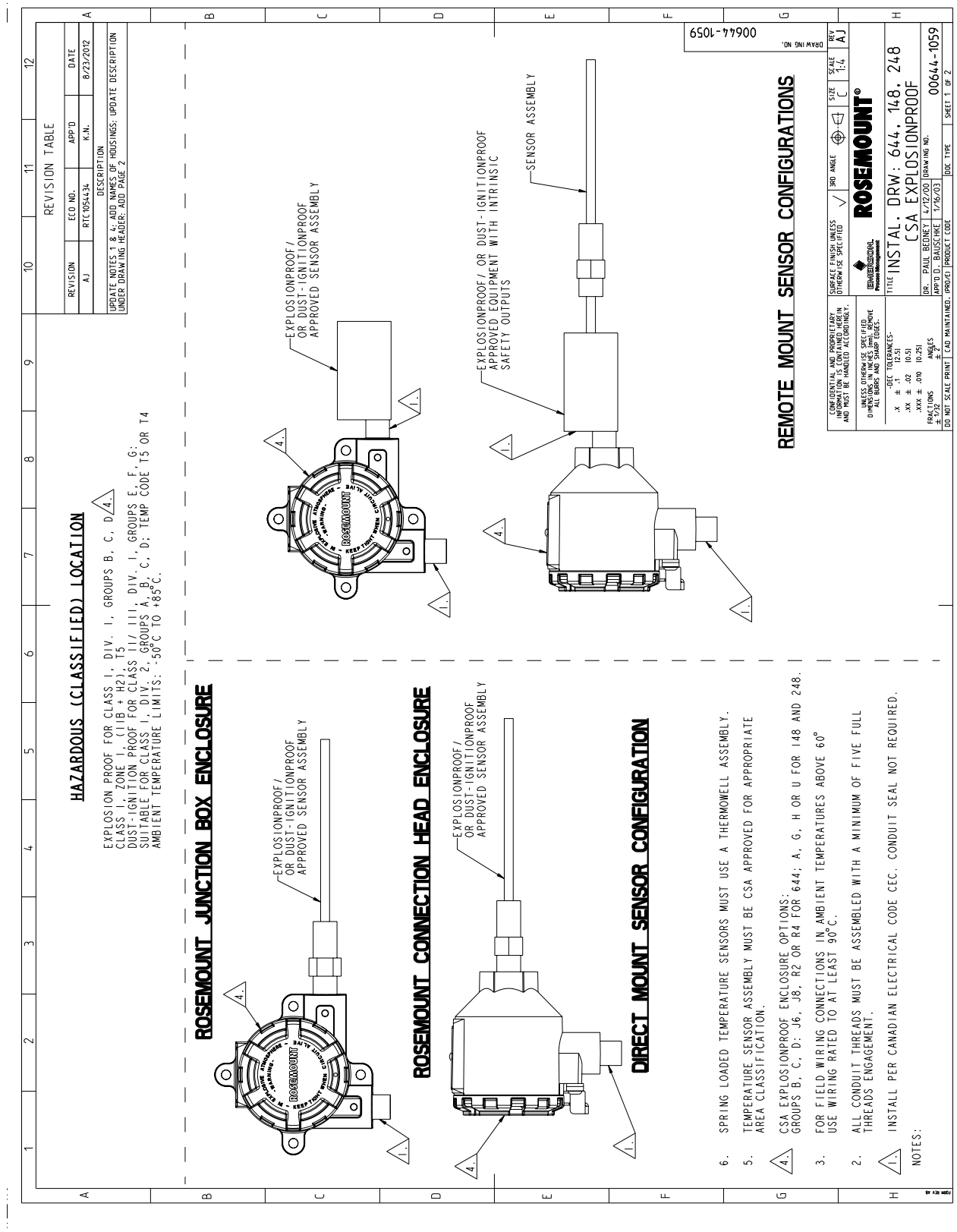

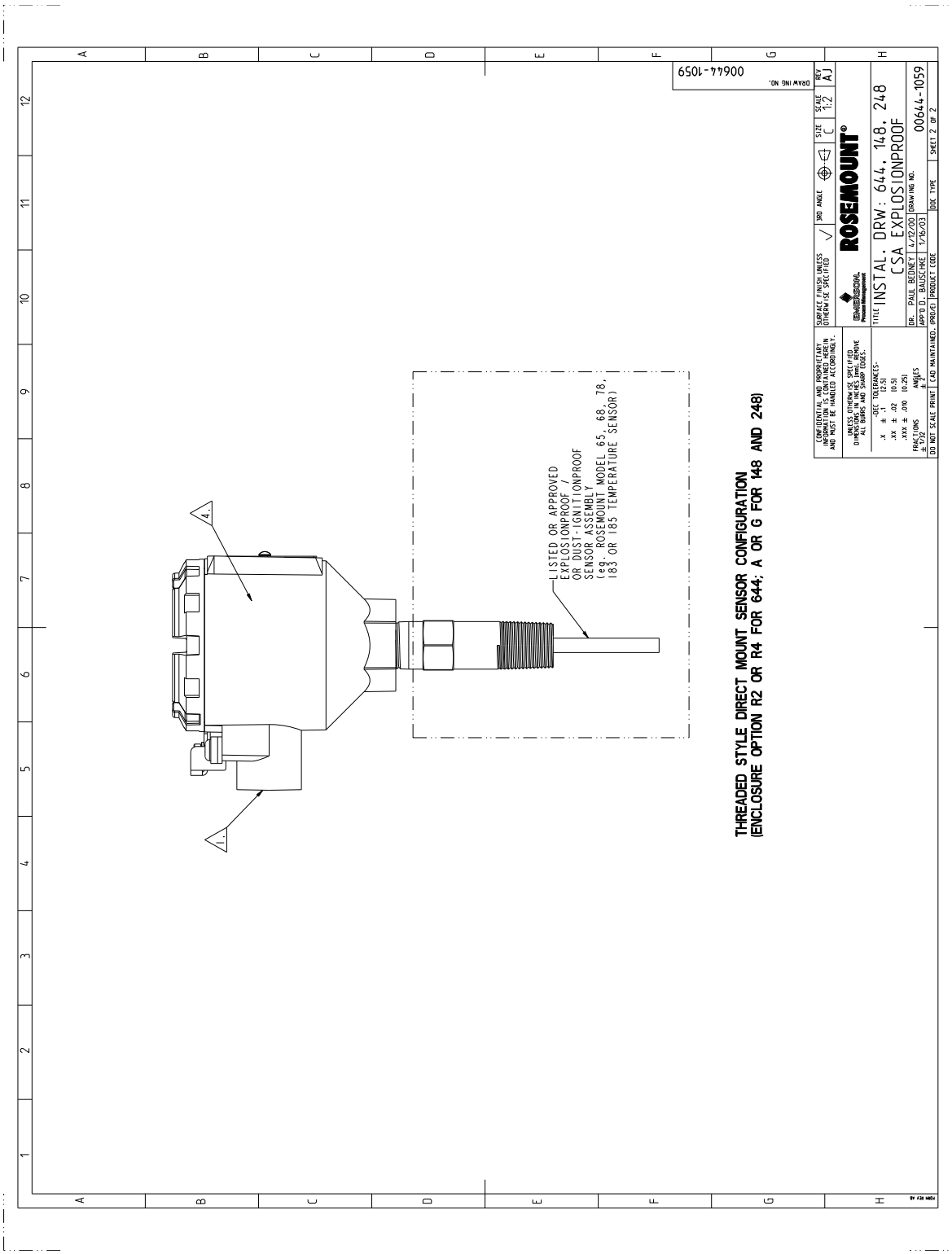
00644-1059
DRAWING NO.
REV AJ
SCALE 1:2
SIZE C
3RD ANGLE
SURFACE FINISH UNLESS OTHERWISE SPECIFIED
ROSEMOUNT®
TITLE INSTAL. DRW: 644, 148, 248
CSA EXPLOSIONPROOF
DR. PAUL BEDNET 1/12/00
APP'D D. BAUSCHKE 1/16/03
DRAWING NO. 00644-1059
DOC TYPE
SHEET 2 OF 2
PRODUCT CODE
CAD MAINTAINED (PRO/E)
DO NOT SCALE PRINT
CONFIDENTIAL AND PROPRIETARY INFORMATION IS CONTAINED HEREIN AND MUST BE HANDLED ACCORDINGLY.
UNLESS OTHERWISE SPECIFIED DIMENSIONS IN INCHES [mm]. REMOVE ALL BURRS AND SHARP EDGES.
.X ± .1 [2.5]
.XX ± .02 [0.5]
.XXX ± .010 [0.25]
FRACTIONS ± 1/32
ANGLES ± 2°
LISTED OR APPROVED EXPLOSIONPROOF / OR DUST-IGNITIONPROOF SENSOR ASSEMBLY (eg., ROSEMOUNT MODEL 65, 68, 78, 183 OR 185 TEMPERATURE SENSOR)
THREADED STYLE DIRECT MOUNT SENSOR CONFIGURATION
(ENCLOSURE OPTION R2 OR R4 FOR 644; A OR G FOR 148 AND 248)

Figure B-4. FM Intrinsic Safety Installation Drawing 00644-2071. Rev AB

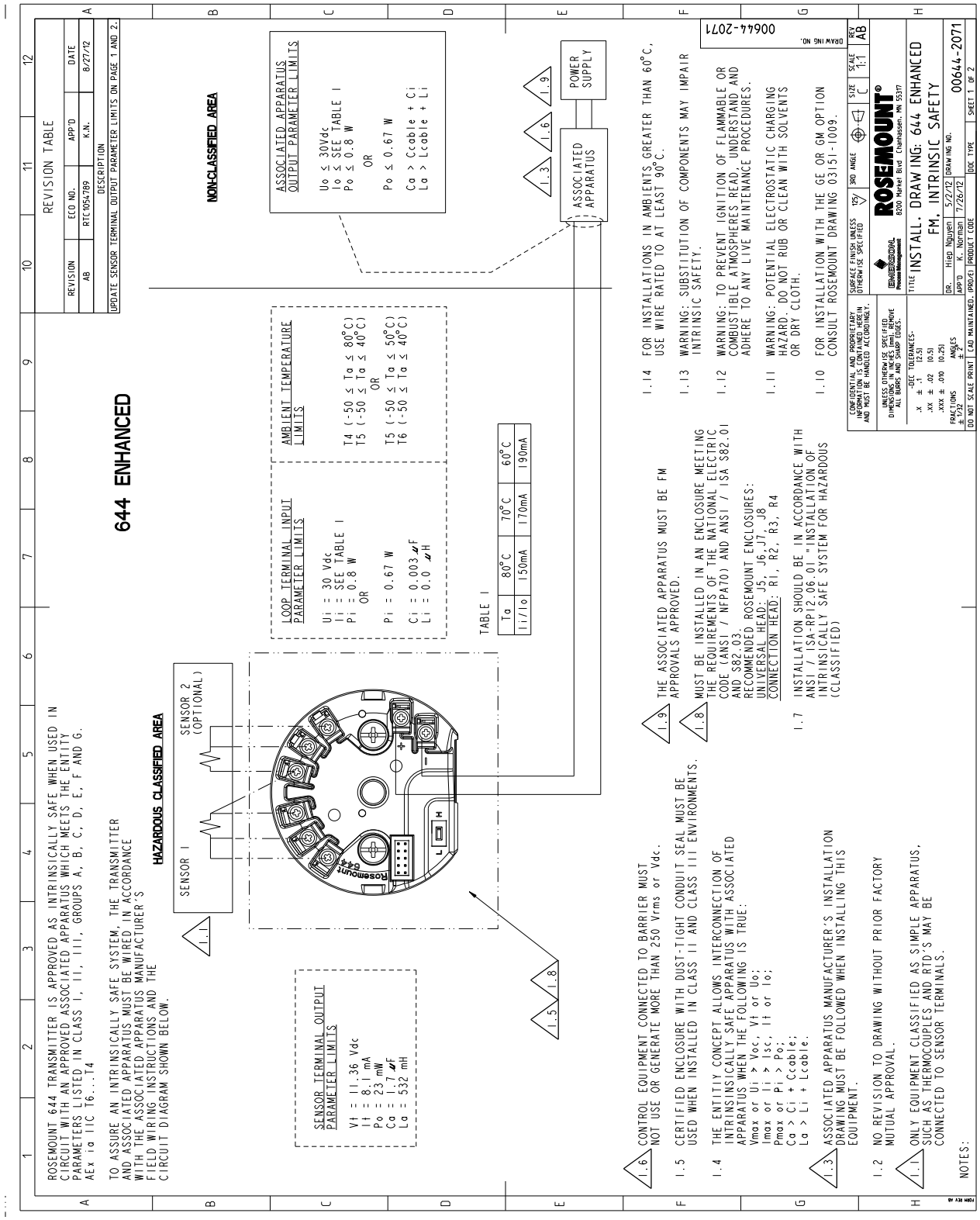

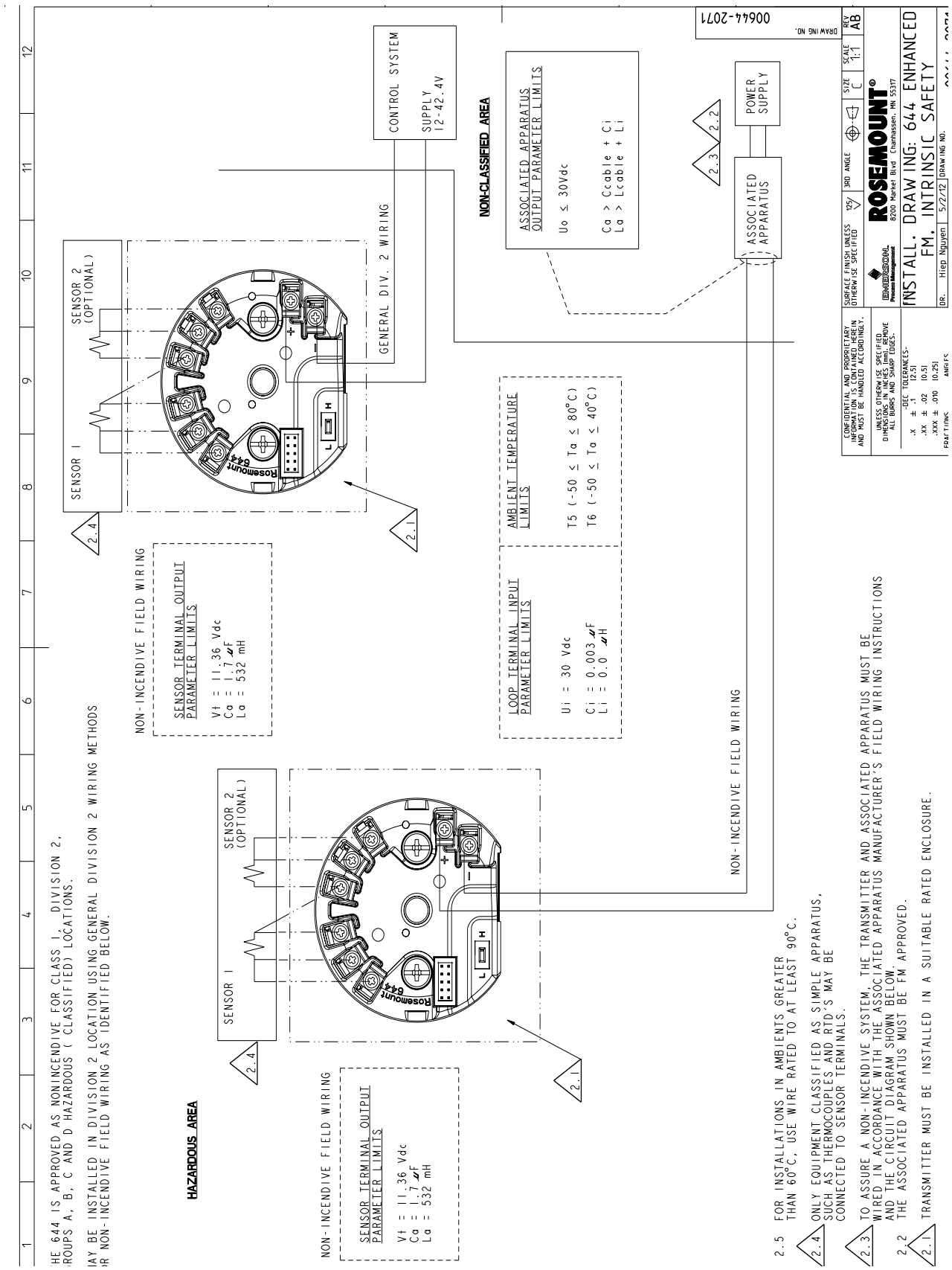
HE 644 IS APPROVED AS NONINCENDIVE FOR CLASS I, DIVISION 2,
ROUPS A, B, C AND D HAZARDOUS (CLASSIFIED) LOCATIONS.
IAY BE INSTALLED IN DIVISION 2 LOCATION USING GENERAL DIVISION 2 WIRING METHODS
IR NON-INCENDIVE FIELD WIRING AS IDENTIFIED BELOW.
HAZARDOUS AREA
NON-INCENDIVE FIELD WIRING
SENSOR TERMINAL OUTPUT PARAMETER LIMITS
Vt = 11.36 Vdc
Ca = 1.7 µF
La = 532 mH
SENSOR 1
SENSOR 2 (OPTIONAL)
2.4
2.1
NON-INCENDIVE FIELD WIRING
SENSOR TERMINAL OUTPUT PARAMETER LIMITS
Vt = 11.36 Vdc
Ca = 1.7 µF
La = 532 mH
SENSOR 1
SENSOR 2 (OPTIONAL)
2.4
2.1
LOOP TERMINAL INPUT PARAMETER LIMITS
Ui = 30 Vdc
Ci = 0.003 µF
Li = 0.0 µH
AMBIENT TEMPERATURE LIMITS
T5 (-50 ≤ Ta ≤ 80°C)
T6 (-50 ≤ Ta ≤ 40°C)
NON-INCENDIVE FIELD WIRING
NON-CLASSIFIED AREA
ASSOCIATED APPARATUS OUTPUT PARAMETER LIMITS
Uo ≤ 30Vdc
Ca > Ccable + Ci
La > Lcable + Li
CONTROL SYSTEM
SUPPLY
12-42.4V
POWER SUPPLY
2.3
2.2
ASSOCIATED APPARATUS
GENERAL DIV. 2 WIRING
2.5 FOR INSTALLATIONS IN AMBIENTS GREATER THAN 60°C, USE WIRE RATED TO AT LEAST 90°C.
2.4 ONLY EQUIPMENT CLASSIFIED AS SIMPLE APPARATUS, SUCH AS THERMOCOUPLES AND RTD'S MAY BE CONNECTED TO SENSOR TERMINALS.
2.3 TO ASSURE A NON-INCENDIVE SYSTEM, THE TRANSMITTER AND ASSOCIATED APPARATUS MUST BE WIRED IN ACCORDANCE WITH THE ASSOCIATED APPARATUS MANUFACTURER'S FIELD WIRING INSTRUCTIONS AND THE CIRCUIT DIAGRAM SHOWN BELOW.
2.2 THE ASSOCIATED APPARATUS MUST BE FM APPROVED.
2.1 TRANSMITTER MUST BE INSTALLED IN A SUITABLE RATED ENCLOSURE.
CONFIDENTIAL AND PROPRIETARY. INFORMATION IS CONTAINED HEREIN AND MUST BE HANDLED ACCORDINGLY.
UNLESS OTHERWISE SPECIFIED DIMENSIONS IN INCHES [mm]. REMOVE ALL BURRS AND SHARP EDGES.
DEC TOLERANCES
.x ± .1 [2.5]
.xx ± .02 [0.5]
.xxx ± .010 [0.25]
FRACTIONS ANGLES
SURFACE FINISH UNLESS OTHERWISE SPECIFIED
3RD ANGLE
ROSEMOUNT®
8200 Market Blvd Chanhassen, MN 55317
INSTALL. DRAWING: 644 ENHANCED FM, INTRINSIC SAFETY
SIZE C
SCALE 1:1
REV AB
DR. Hiep Nguyen 5/2/12
DRAWING NO. 00644-2071

Figure B-5. FM Intrinsic Safety Installation Drawing 00644-0009, Rev. AE Sheet 1 of 2

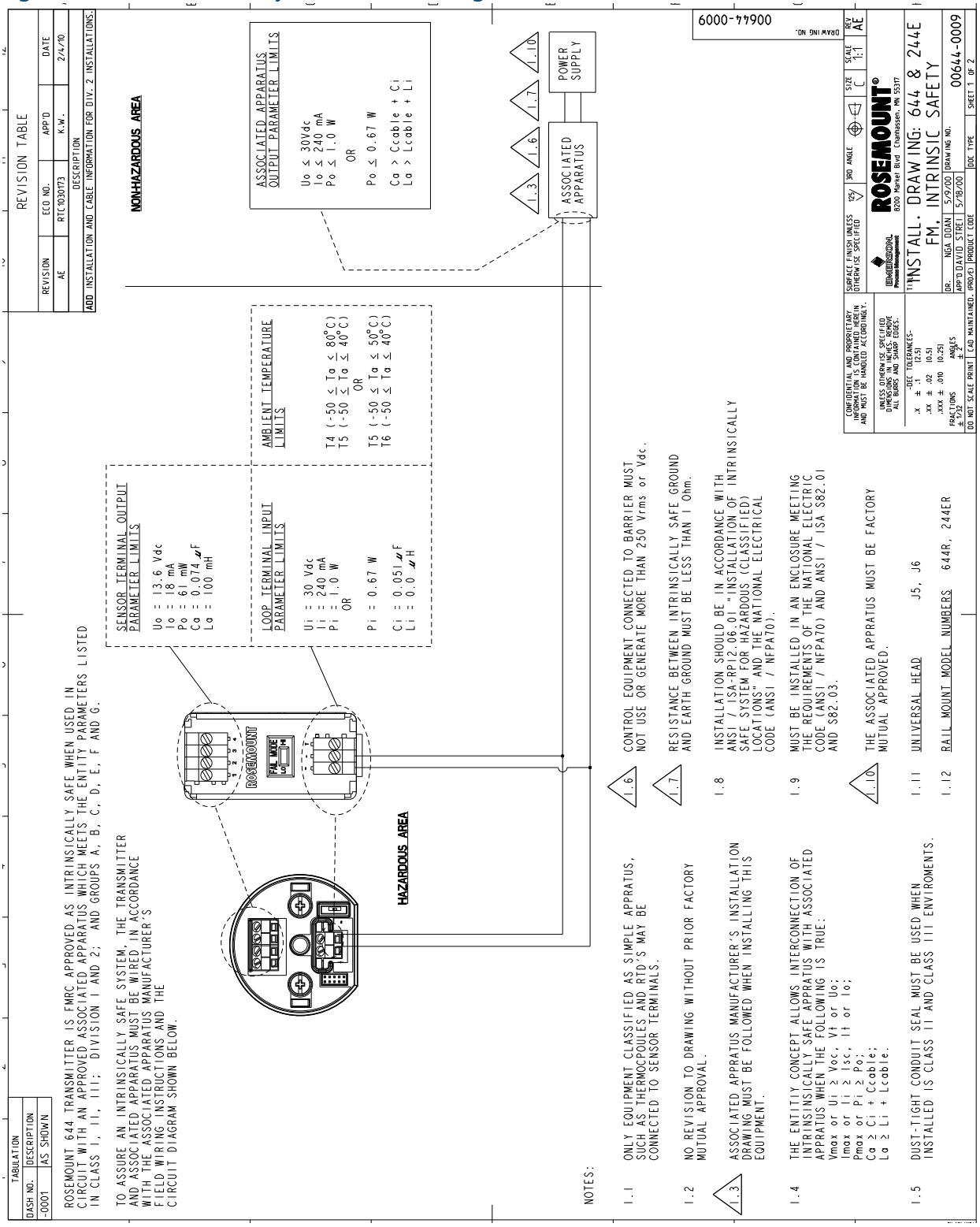

Sheet 2 of 2

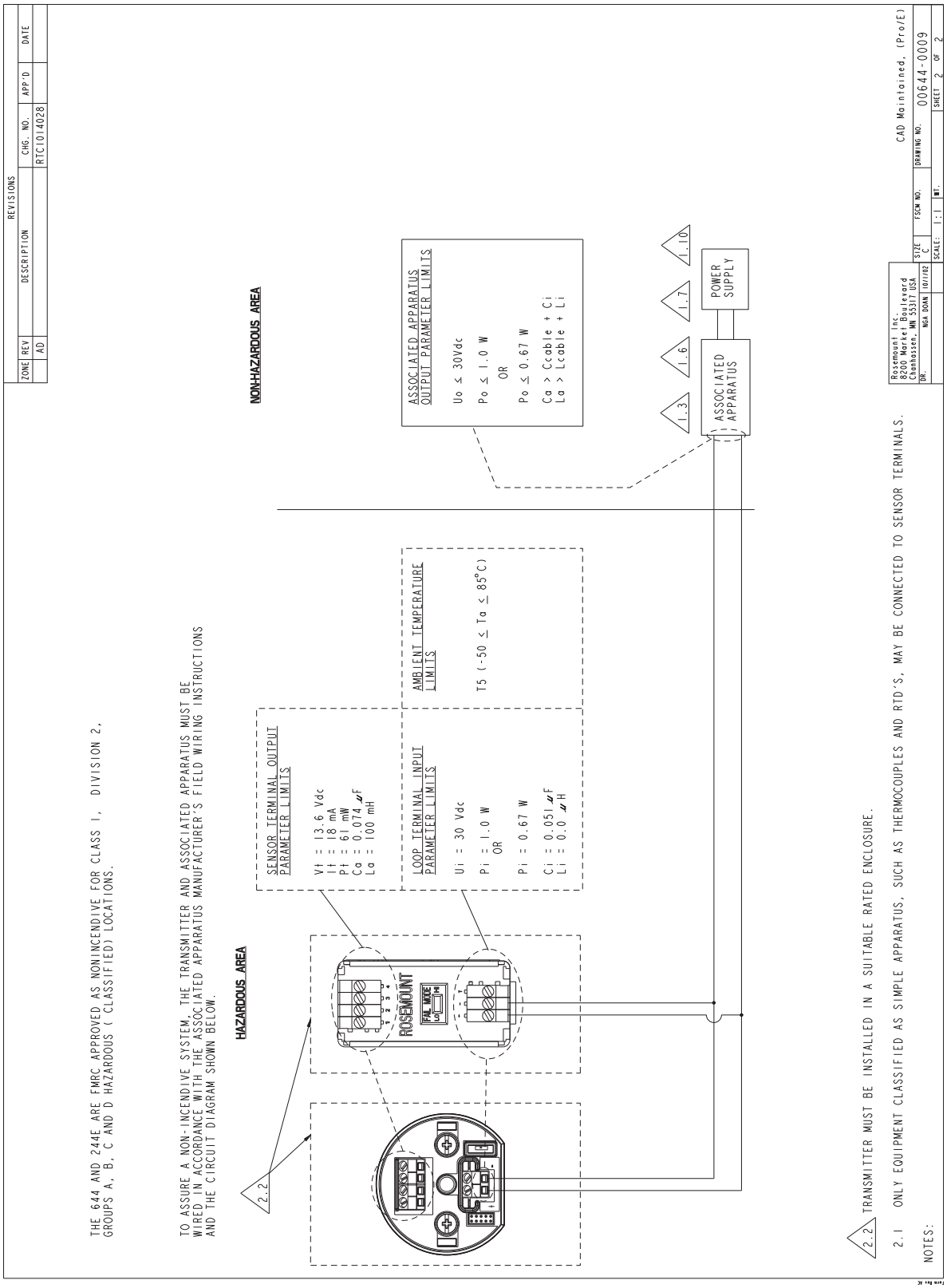

644-0009A01A

Figure B-6. FM Explosion-Proof Installation Drawing 00644-1049, Rev. AF

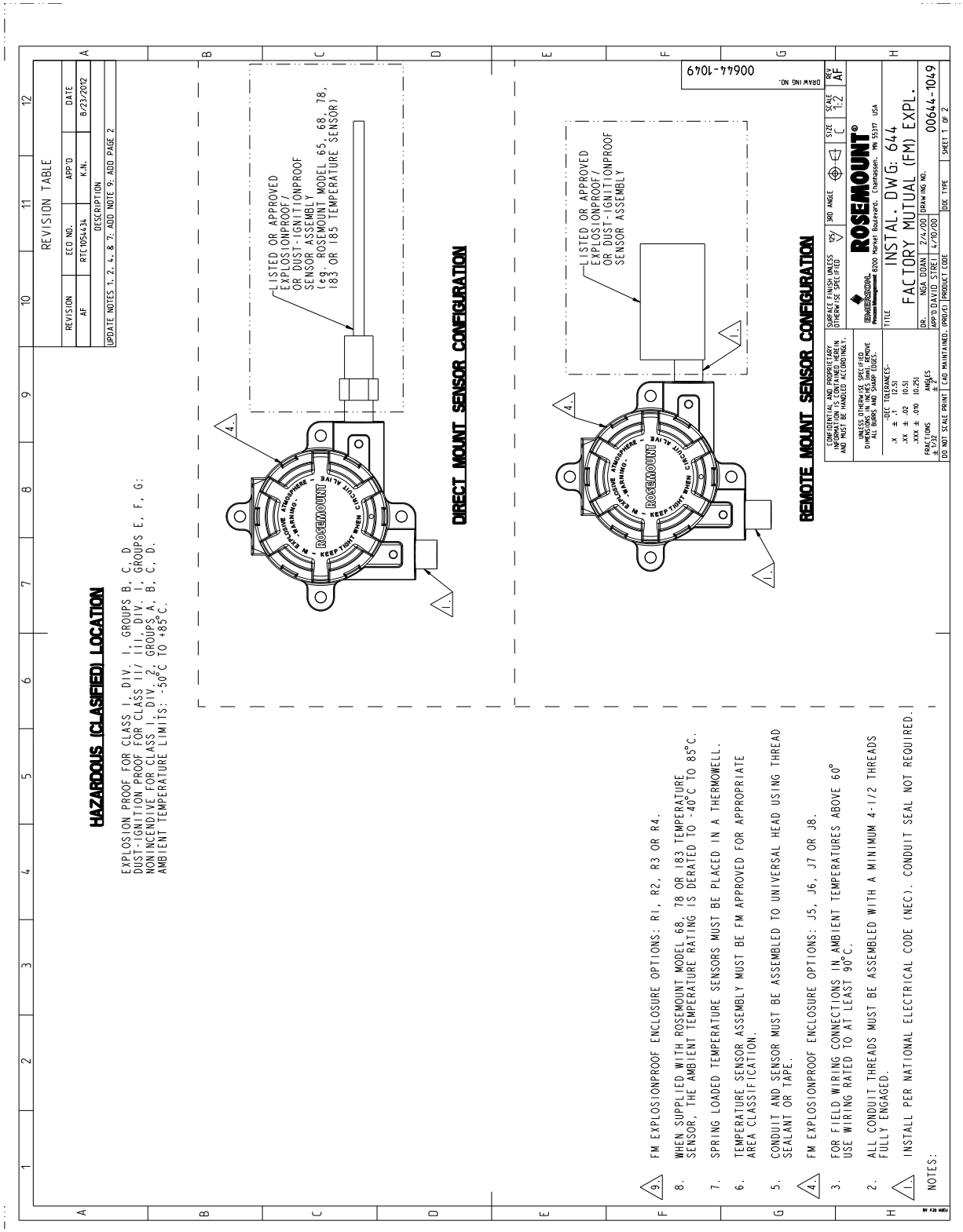

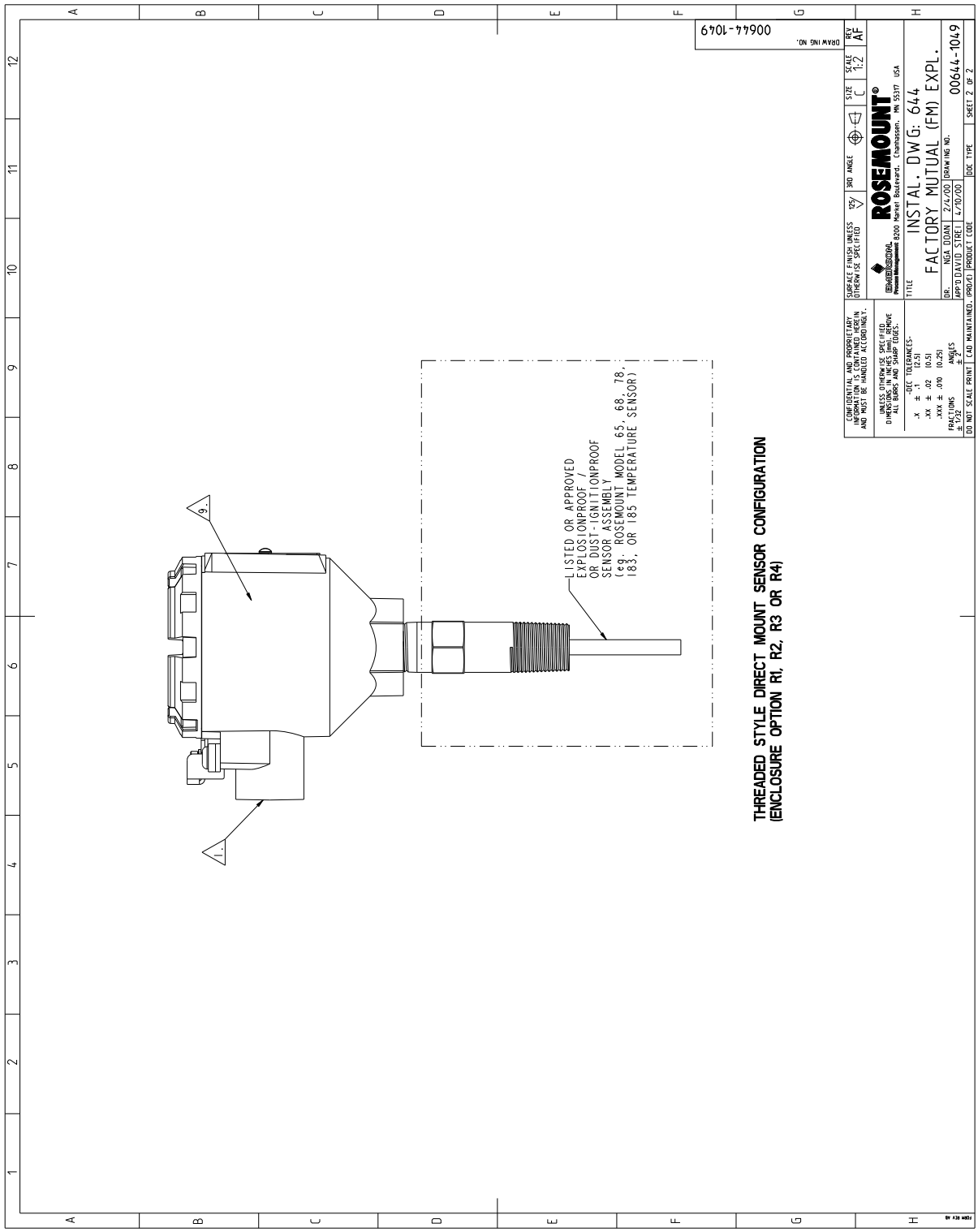
00644-1049
DRAWING NO.
REV AF
SCALE 1:2
SIZE C
3RD ANGLE
ROSEMOUNT
8200 Market Boulevard, Chanhassen, MN 55317 USA
TITLE
INSTAL. DWG: 644
FACTORY MUTUAL (FM) EXPL.
DR. NGA DOAN 2/4/00
APP'D DAVID STREI 4/10/00
DRAWING NO. 00644-1049
DOC TYPE
SHEET 2 OF 2
PRODUCT CODE
CAD MAINTAINED (PRO/E)
DO NOT SCALE PRINT
CONFIDENTIAL AND PROPRIETARY INFORMATION IS CONTAINED HEREIN AND MUST BE HANDLED ACCORDINGLY.
UNLESS OTHERWISE SPECIFIED DIMENSIONS IN INCHES [mm]. REMOVE ALL BURRS AND SHARP EDGES.
DEC TOLERANCES
X ± .1 [2.5]
.XX ± .02 [0.5]
.XXX ± .010 [0.25]
FRACTIONS ±1/32 ANGLES ±1°
SURFACE FINISH UNLESS OTHERWISE SPECIFIED 125
LISTED OR APPROVED EXPLOSIONPROOF / OR DUST-IGNITIONPROOF SENSOR ASSEMBLY (eg. ROSEMOUNT MODEL 65, 68, 78, 183, OR 185 TEMPERATURE SENSOR)
9.
1.
THREADED STYLE DIRECT MOUNT SENSOR CONFIGURATION
(ENCLOSURE OPTION R1, R2, R3 OR R4)

Appendix C Field Communicator Menu Trees and Fast Keys

C.1 Field Communicator menu trees

Figure C-1. Rosemount 644 HART Revision 5 Field Communicator menu tree - Overview

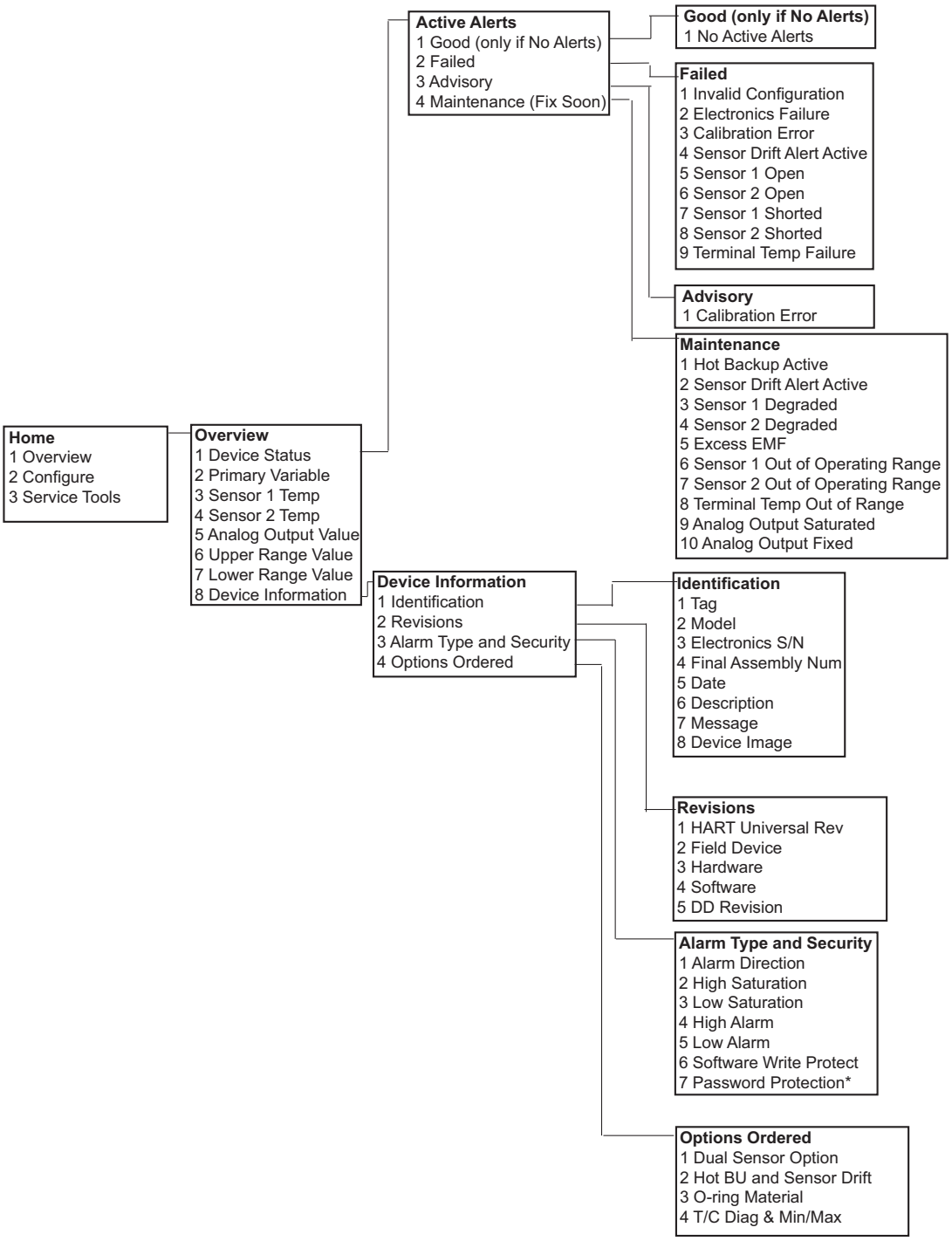

Figure C-2. Rosemount 644 HART Revision 5 Field Communicator menu tree - Configure

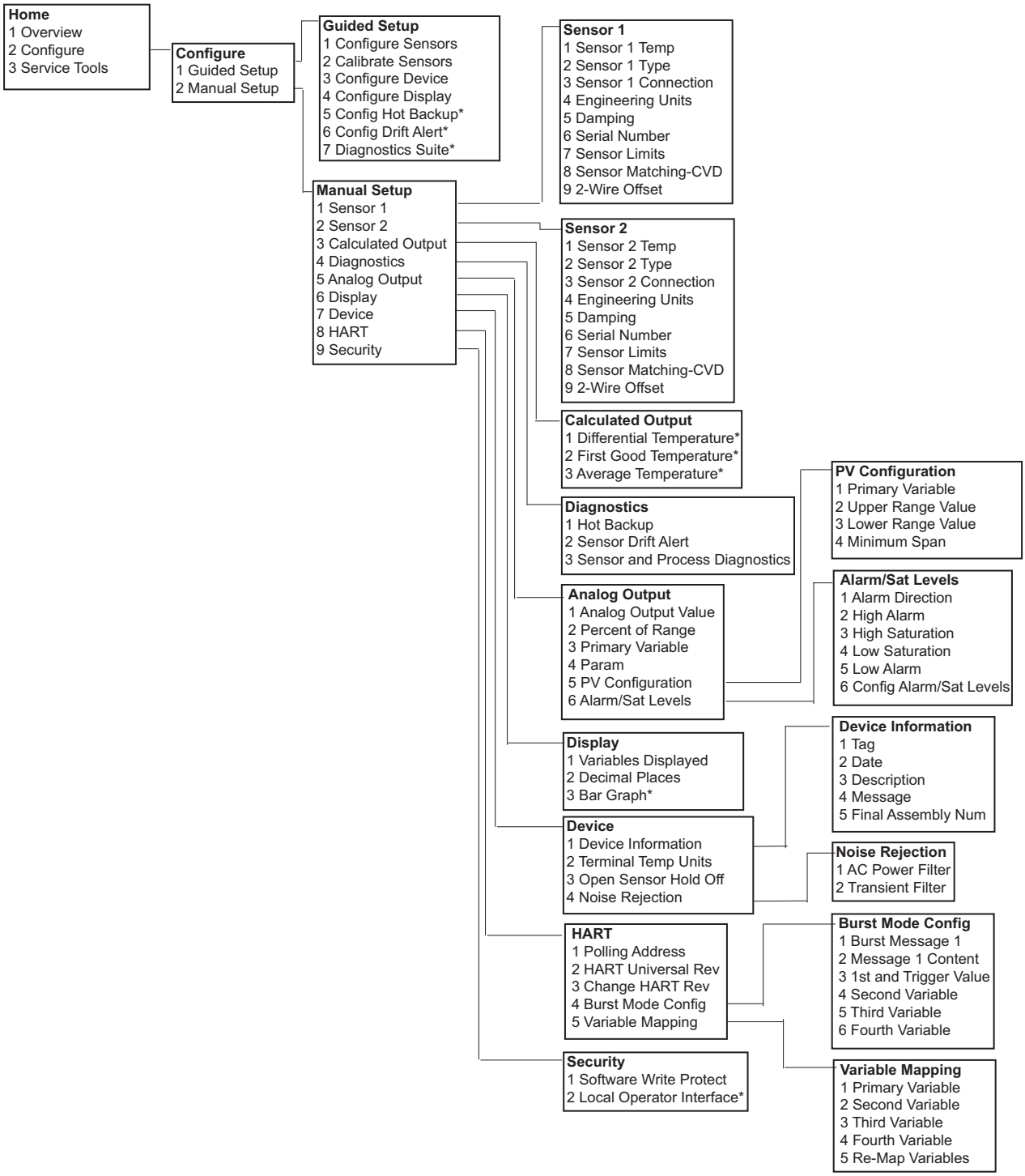

Figure C-3. Rosemount 644 HART Revision 5 Field Communicator menu tree – Service Tools

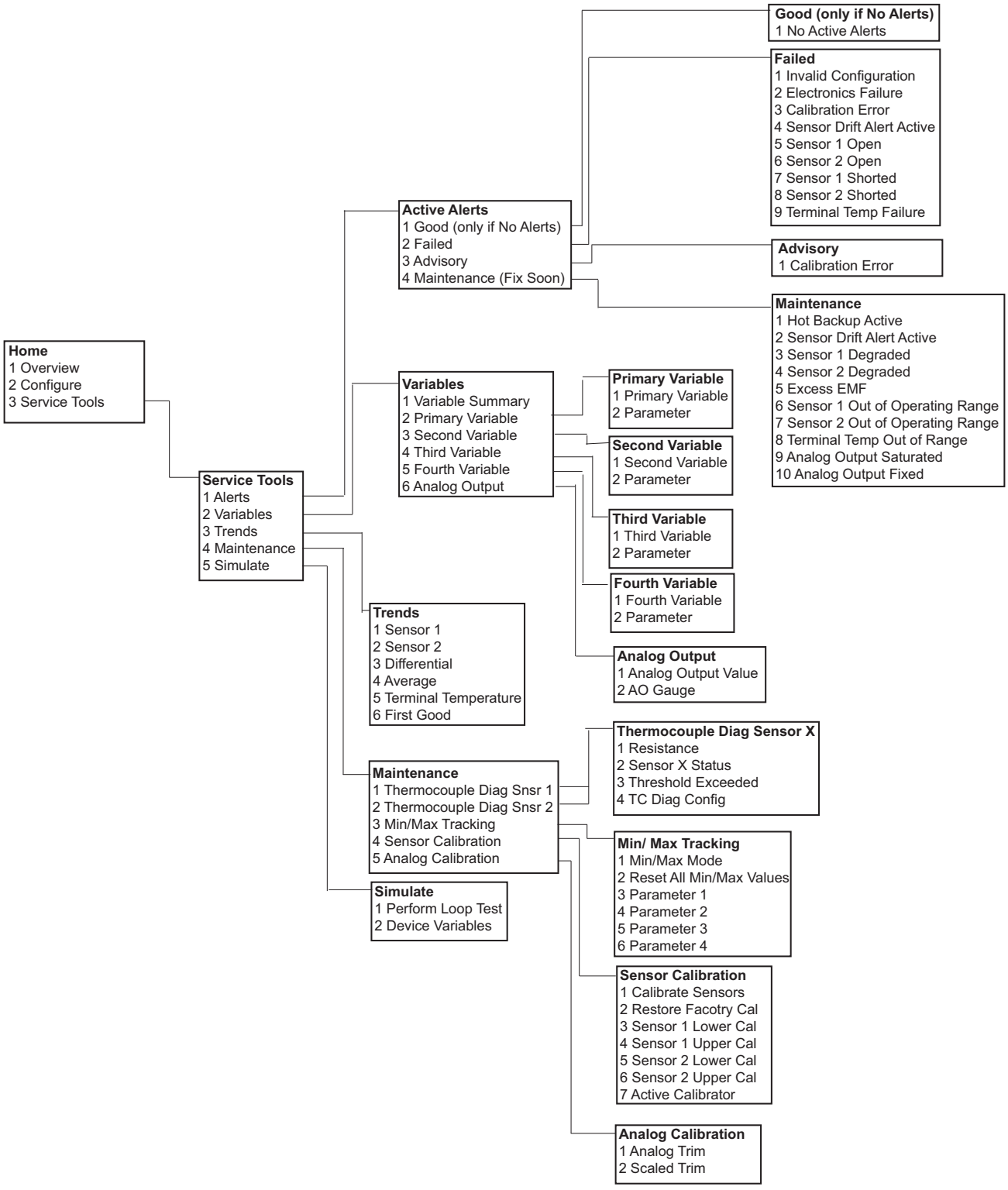

Figure C-4. Rosemount 644 HART Revision 7 Field Communicator menu tree – Overview

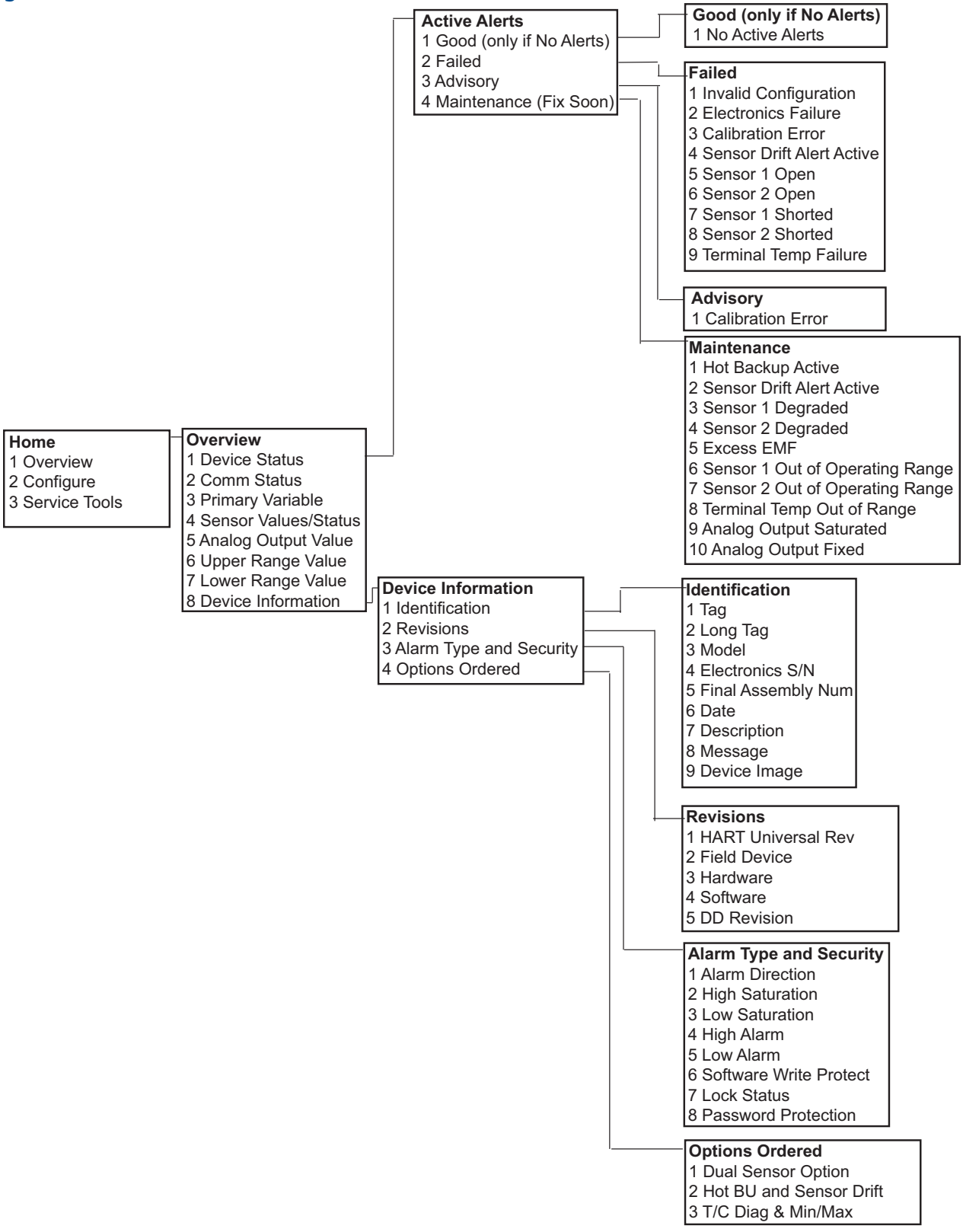

Figure C-5. Rosemount 644 HART Revision 7 Field Communicator menu tree - Configure

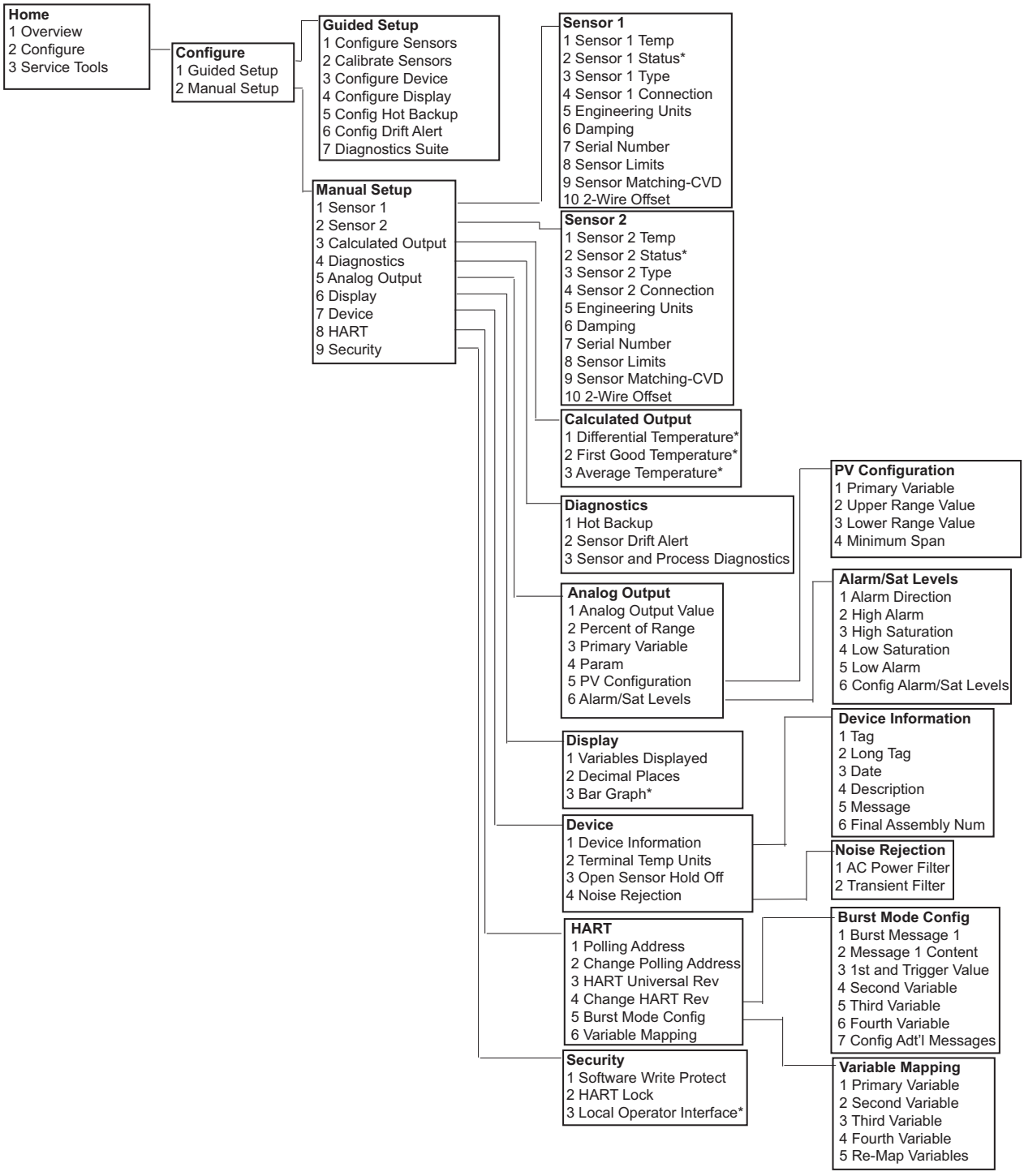

Figure C-6. Rosemount 644 HART Revision 7 Field Communicator menu tree – Service Tools

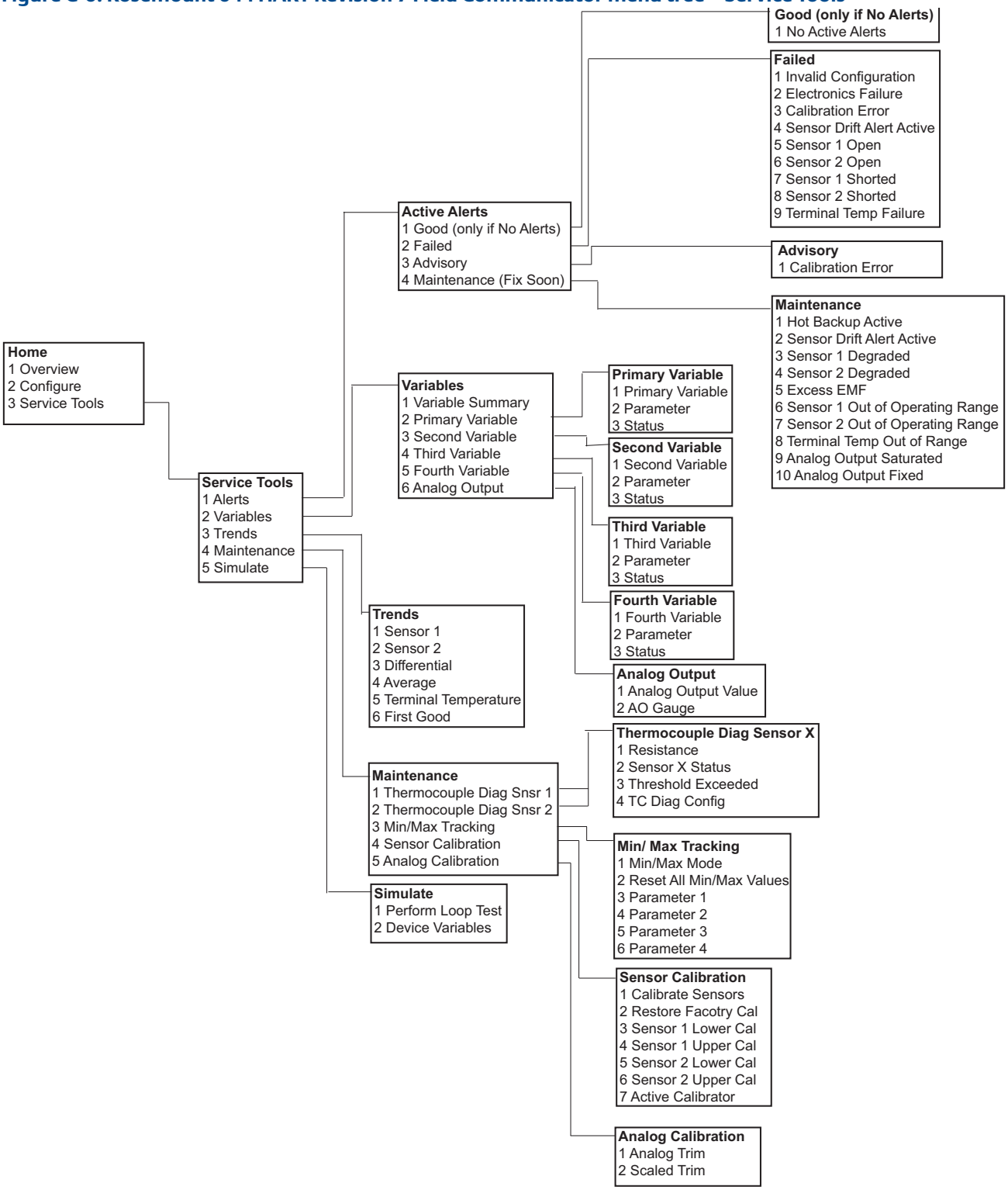

C.2 Field Communicator fast keys

Table C-1. Device Revision 8 and 9 (HART 5 and 7) Field Communicator Device Dashboard Fast Key Sequences

Function	HART 5	HART 7
Alarm Values	2, 2, 5, 6	2, 2, 5, 6
Analog Calibration	3, 4, 5	3, 4, 5
Analog Output	2, 2, 5, 1	2, 2, 5, 1
Average Temperature Setup	2, 2, 3, 3	2, 2, 3, 3
Burst Mode	2, 2, 8, 4	2, 2, 8, 4
Comm Status		1, 2
Configure additional messages		2, 2, 8, 4, 7
Configure Hot Backup	2, 2, 4, 1, 3	2, 2, 4, 1, 3
D/A Trim	3, 4, 4, 1	3, 4, 4, 1
Damping Values	2, 2, 1, 5	2, 2, 1, 6
Date	2, 2, 7, 1, 2	2, 2, 7, 1, 3
Display Setup	2, 1, 4	2, 1, 4
Descriptor	2, 2, 7, 1, 4	2, 2, 7, 1, 5
Device Information	1, 8, 1	1, 8, 1
Differential Temperature Setup	2, 2, 3, 1	2, 2, 3, 1
Drift Alert	2, 2, 4, 2	2, 2, 4, 2
Filter 50/60 Hz	2, 2, 7, 4, 1	2, 2, 7, 4, 1
First Good Temperature Setup	2, 2, 3, 2	2, 2, 3, 2
Hardware Revision	1, 8, 2, 3	1, 8, 2, 3
HART Lock		2, 2, 9, 2
Intermittent Sensor Detect	2, 2,7,4 ,2	2, 2,7,4 ,2
Loop Test	3, 5, 1	3, 5, 1
Locate Device		3, 4, 6, 2
Lock Status		1, 8, 3, 8
LRV (Lower Range Value)	2, 2, 5, 5, 3	2, 2, 5, 5, 3
LSL (Lower Sensor Limit)	2, 2, 1, 7, 2	2, 2, 1, 8, 2
Message	2, 2, 7, 1, 3	2, 2, 7, 1, 4
Open Sensor Holdoff	2, 2, 7, 3	2, 2, 7, 3
Percent Range	2, 2, 5, 2	2, 2, 5, 2
Sensor 1 Configuration	2, 1, 1	2, 1, 1
Sensor 2 Configuration	2, 1, 1	2, 1, 1
Sensor 1 Serial Number	2, 2, 1, 6	2, 2, 1, 7
Sensor 2 Serial Number	2, 2, 2, 7	2, 2, 2, 8
Sensor 1 Type	2, 2, 1, 2	2, 2, 1, 3
Sensor 2 Type	2, 2, 2, 2	2, 2, 2, 3
Sensor 1 Unit	2, 2, 1, 4	2, 2, 1, 5
Sensor 2 Unit	2, 2, 2, 4	2, 2, 2, 5
Sensor 1 Status		2, 2, 1, 2
Sensor 2 Status		2, 2, 2, 2
Simulate Digital Signal		3, 5, 2

Function	HART 5	HART 7
Software Revision	1, 8, 2, 4	1, 8, 2, 4
Tag	2, 2, 7, 1, 1	2, 2, 7, 1, 1
Long Tag		2, 2, 7, 1, 2
Terminal Temperature	2, 2, 7, 1	2, 2, 8, 1
URV (Upper Range Value)	2, 2, 5, 5, 2	2, 2, 5, 5, 2
USL (Upper Sensor Limit)	2, 2, 1, 7, 2	2, 2, 1, 8, 2
Variable Mapping	2, 2, 8, 5	2, 2, 8, 5
2-wire Offset Sensor 1	2, 2, 1, 9	2, 2, 1, 10
2-wire Offset Sensor 2	2, 2, 2, 9	2, 2, 2, 10

Table C-2. Device Revision 7 Field Communicator Traditional Fast Key Sequences

Function	Fast Keys		Function	Fast Key
Active Calibrator	1, 2, 2, 1, 3		Num Req Preams	1, 3, 3, 3, 2
Alarm/Saturation	1, 3, 3, 2		Open Sensor Holdoff	1, 3, 5, 3
AO Alarm Type	1, 3, 3, 2, 1		Percent Range	1, 1, 5
Burst Mode	1, 3, 3, 3, 3		Poll Address	1, 3, 3, 3, 1
Burst Option	1, 3, 3, 3, 4		Process Temperature	1, 1
Calibration	1, 2, 2		Process Variables	1, 1
Callendar-Van Dusen	1, 3, 2, 1		PV Damping	1, 3, 3, 1, 3
Configuration	1, 3		PV Unit	1, 3, 3, 1, 4
D/A Trim	1, 2, 2, 2		Range Values	1, 3, 3, 1
Damping Values	1, 1, 10		Review	1, 4
Date	1, 3, 4, 2		Scaled D/A Trim	1, 2, 2, 3
Descriptor	1, 3, 4, 3		Sensor Connection	1, 3, 2, 1, 1
Device Info	1, 3, 4		Sensor 1 Setup	1, 3, 2, 1, 2
Device Output Configuration	1, 3, 3		Sensor Serial Number	1, 3, 2, 1, 4
Diagnostics and Service	1, 2		Sensor 1 Trim	1, 2, 2, 1
Filter 50/60 Hz	1, 3, 5, 1		Sensor 1 Trim-Factory	1, 2, 2, 1, 2
Hardware Rev	1, 4, 1		Sensor Type	1, 3, 2, 1, 1
Hart Output	1, 3, 3, 3		Software Revision	1, 4, 1
Intermittent Detect	1, 3, 5, 4		Status	1, 2, 1, 4
LCD Display Options	1, 3, 3, 4		Tag	1, 3, 4, 1
Loop Test	1, 2, 1, 1		Terminal Temperature	1, 3, 2, 2,
LRV (Lower Range Value)	1, 1, 6		Test Device	1, 2, 1
LSL (Lower Sensor Limit)	1, 1, 8		URV (Upper Range Value)	1, 1, 7
Measurement Filtering	1, 3, 5		USL (Upper Sensor Limit)	1, 1, 9
Message	1, 3, 4, 4		Variable Mapping	1, 3, 1
Meter Configuring	1, 3, 3, 4, 1		Variable Re-Map	1, 3, 1, 5
Meter Decimal Point	1, 3, 3, 4, 2		Write Protect	1, 2, 3
			2-Wire Offset	1, 3, 2, 1, 2, 1

Appendix D Local Operator Interface (LOI)

D.1 Number entry

Floating-point numbers can be entered with the LOI. All eight number locations on the top line can be used for number entry. Refer to Table 2-2 on page 2-13 for LOI button operation. Below is a floating-point number entry example for changing a value of "-0000022" to "000011.2"

Table D-1. LOI Number Entry

Step	Instruction	Current Position (indicated by underline)
1	When the number entry begins, the left most position is the selected position. In this example, the negative symbol, "-", will be flashing on the screen.	-0000022
2	Press the scroll button until the "0" is blinking on the screen in the selected position.	00000022
3	Press the enter button to select the "0" as an entry. The second digit from the left will be blinking.	00000022
4	Press the enter button to select "0" for second digit. The third digit from the left will be blinking.	00000022
5	Press the enter button to select "0" for the third digit. The fourth digit from the left will now be blinking.	00000022
6	Press the enter button to select "0" for the fourth digit. The fifth digit from the left will now be blinking.	00000022
7	Press scroll to navigate through the numbers until the "1" is on the screen.	00001022
8	Press the enter button to select the "1" for the fifth digit. The sixth digit from the left will now be blinking.	00001022
9	Press scroll to navigate through the numbers until the "1", is on the screen.	00001122
10	Press the enter button to select the "1" for the sixth digit. The seventh digit from the left will now be blinking.	00001122
11	Press scroll to navigate through the numbers until the decimal, ".", is on the screen.	000011.2
12	Press the enter button to select the decimal, ".", for the seventh digit. After pressing enter, all digits to the right of the decimal will now be zero. The eighth digit from the left will now be blinking.	000011.0
13	Press the scroll button to navigate through the numbers until the "2", is on the screen.	000011.2
14	Press the enter button to select the "2" for the eighth digit. The number entry will be complete and a "SAVE" screen will be shown.	000011.2

Usage notes:

- It is possible to move backwards in the number by scrolling to the left and pressing enter. The left arrow appears as such in the LOI: ;
- The negative symbol is only allowed in the left most position.
- The *Over score* character "¯ "is used in the LOI to enter a blank space for Tag entry.

D.2 Text entry

Text can be entered with the LOI. Depending on the edited item, up to eight locations on the top line can be used for text entry. Text entry follows the same rules as the number entry rules in "Number entry" on page 169, except the following characters are available in all locations: A-Z, 0-9, -, /, space.

D.2.1 Scrolling

When it is desired to move more quickly through the list of menu choices or alpha numeric characters without individual button presses, a faster scrolling technique is available. Scrolling functionality allows the user to walk through any menu in forward or reverse order, enter text or digits easily and quickly.

Menu scrolling:

- Simply hold down the left button after it brings you to the next menu item, each of the proceeding menus will be shown one after another while the button is pressed down. For an example, please see Figure D-1 below.

Text or digit entry scrolling:

- Quickly navigate through number and text menu lists by holding down the left button the same as in Menu

Figure D-1. Menu scrolling/text and digit scrolling

Menu scrolling	Text and digit scrolling
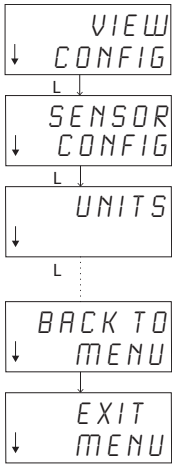	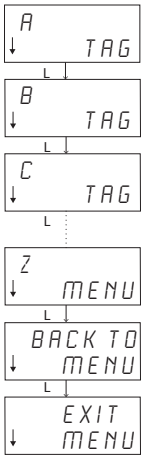

Scrolling Backwards:

- Moving backwards during digit or text entry was described above in Digit Entry “Usage Notes”. During regular menu navigation it is possible to go back to the previous screen by pressing both buttons at the same time.

Figure D-2. Scrolling backwards

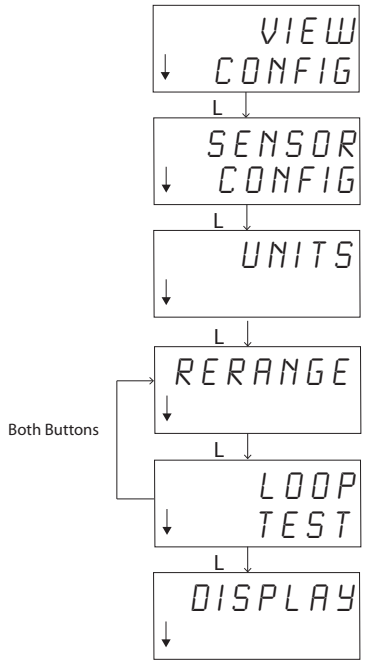

D.3 Timeout

The LOI in standard operation will Time Out and return to the home screen after 15 minutes of inactivity. To re-enter into the LOI menu press either button.

D.4 Saving and canceling

The Save and Cancel functionality implemented at the end of a series of steps allows the user to save the change or exit the function without saving any of the changes. The way these functions are shown should always look as follows:

Saving

Whether you’re choosing a setting from a list of choices or entering digits or text the first screen shall show “SAVE?” to ask the user if they want to save the information just entered. You can select the cancel function (choose NO) or the save function (choose YES). After the save function is selected, “SAVED” shall appear on the screen.

Saving a setting:

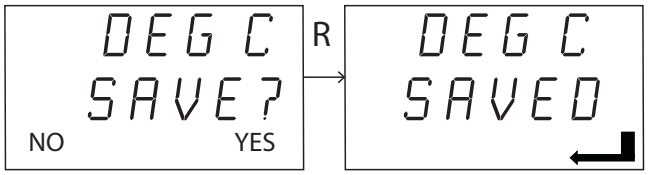

Saving text or values:

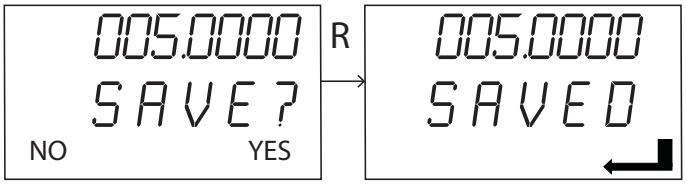

Cancelling

When a value or text string is being entered into the transmitter via the LOI and the function is cancelled, the LOI menu can offer the user a means to re-enter the value without losing the information entered. Examples of a value being entered are the Tag, Damping, and Calibration values. If you do not want to Re-Enter the value and desire to continue cancelling, select the NO option when prompted.

Cancelling:

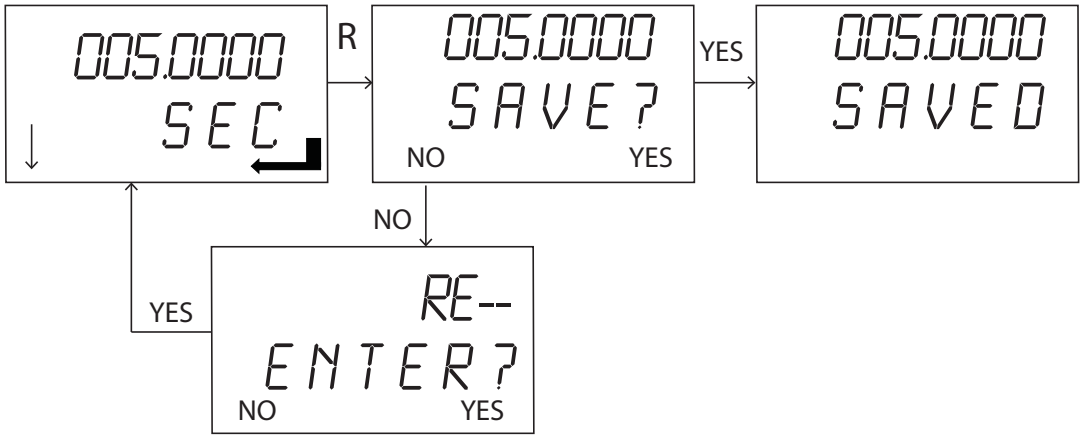

D.5 LOI menu tree

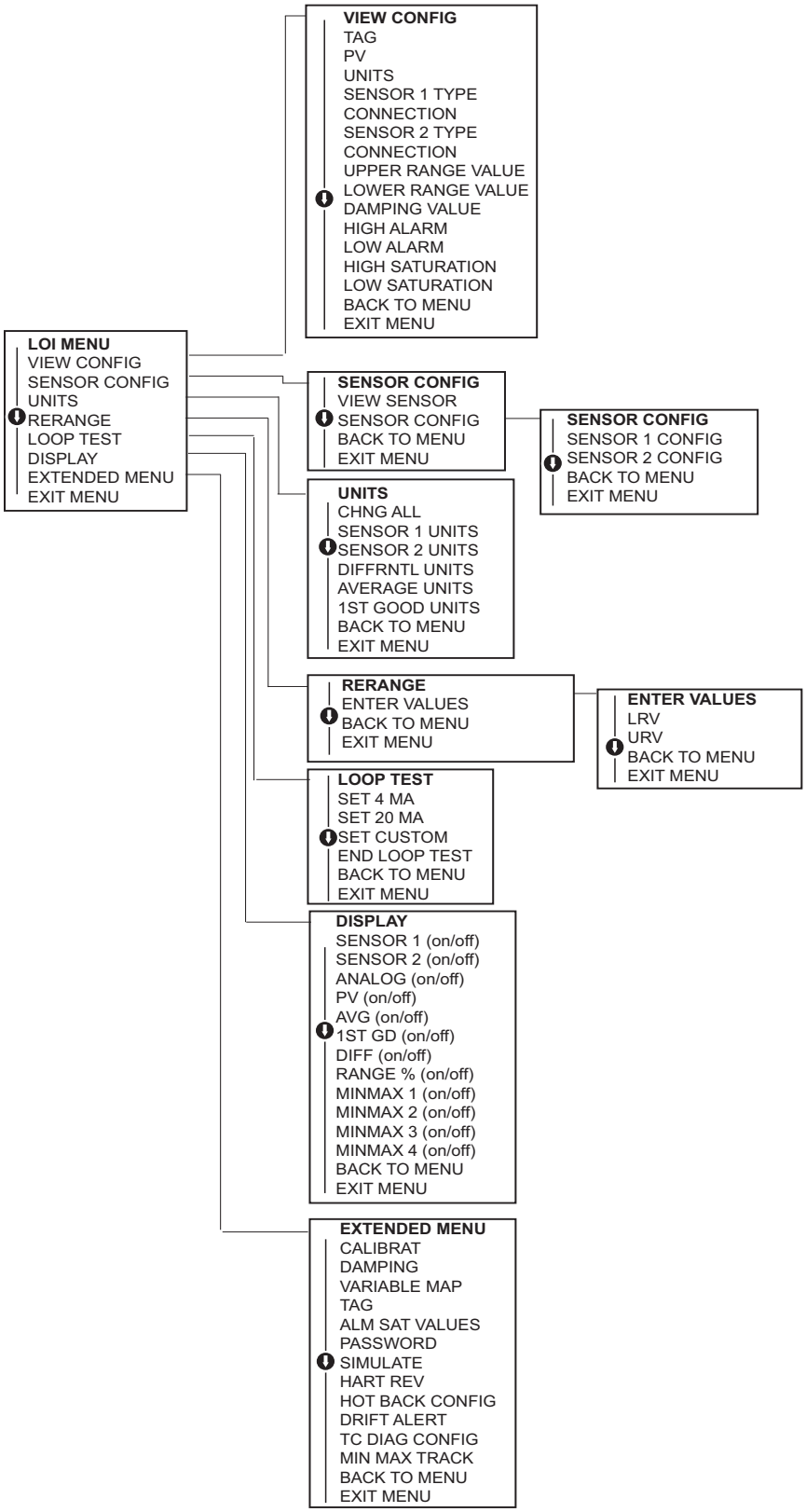

D.6 LOI menu tree – extended menu

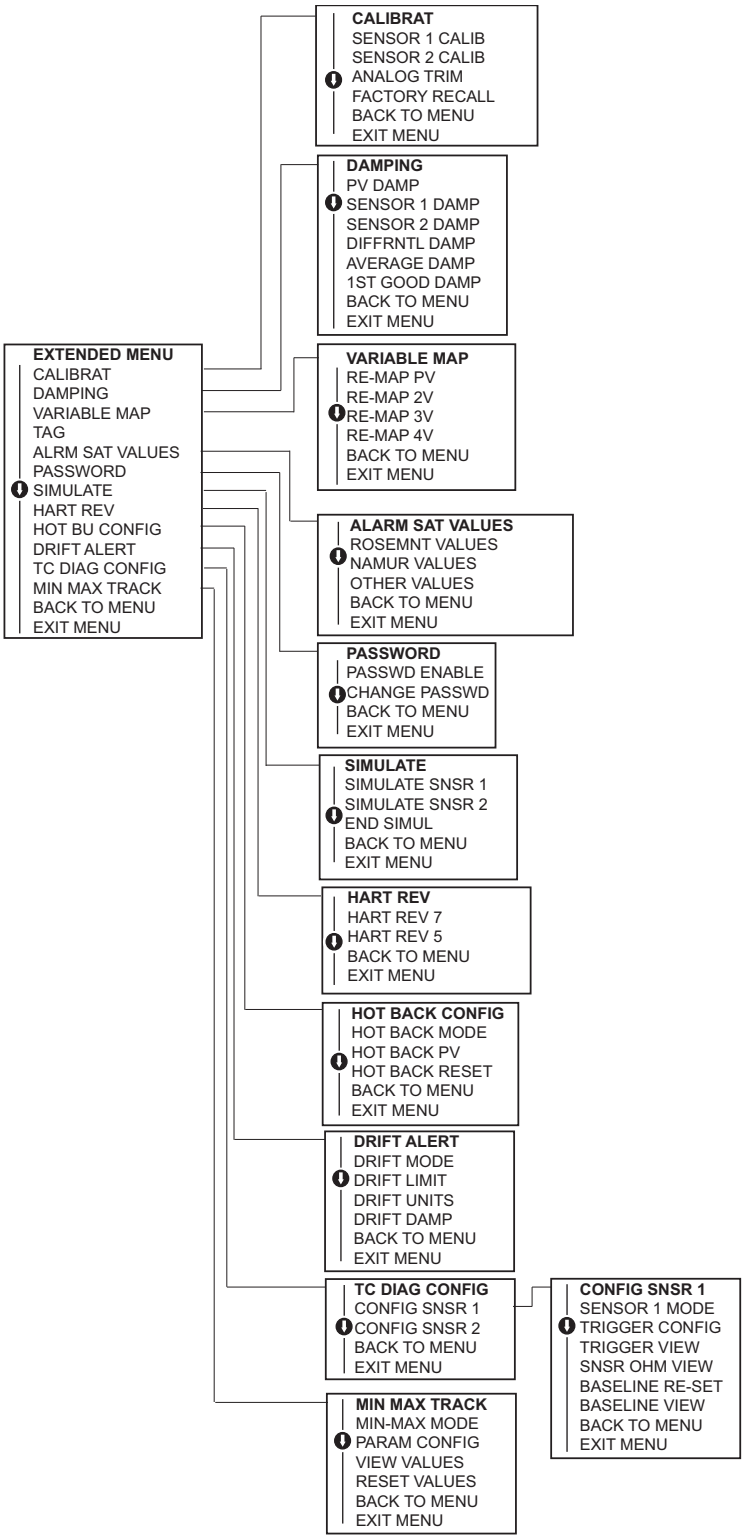

Index

C

Considerations 3
- Commissioning 4
- Electrical 4
- Environmental 4
  - Temperature 4
- General 3
- Mechanical 4
  - Location 4
  - Special Mounting 4

D

Diagram
- Sensor Wiring 17

I

Installation 10, 55
- European 10
  - Head Mount 55
- Flowchart 9, 51
- LCD Display 14, 59
- Multichannel 15
- North American
  - Head Mount 56
  - Rail Mount 13, 57, 58

L

LCD Display
- Installation 14, 59

M

Mounting 9, 54
- Model 644H
  - DIN Rail 54

Multichannel
- Installation 15

O

Overview 2
- Manual 2
- Transmitter 3

P

Performance specifications 105
Power Supply 22

R

Return of Materials 5

S

Sensor
- Connection
  - Diagram 17
- Wiring 16

Specifications
- Performance 105

W

Wiring 16
- Sensor Connection 16
  - Diagram 17

Reference Manual
00809-0200-4728, Rev PA
November 2013

Standard Terms and Conditions of Sale can be found at www.rosemount.com/terms_of_sale
The Emerson logo is a trademark and service mark of Emerson Electric Co.
Rosemount. the Rosemount logotype, and SMART FAMILY are registered trademarks of Rosemount Inc.
Coplanar is a trademark of Rosemount Inc.
Halocarbon is a trademark of the Halocarbon Products Corporation.o.
Fluorinert is a registered trademark of Minnesota Mining and Manufacturing Company Corporation
Syltherm 800 and D.C. 200 are registered trademarks of Dow Corning Corporation.
Neobee M-20 is a registered trademark of PVO International, Inc.
HART is a registered trademark of the HART Communication Foundation.
Foundation fieldbus is a registered trademark of the Fieldbus Foundation.
All other marks are the property of their respective owners.

© November 2013 Rosemount, Inc. All rights reserved.

Emerson Process Management
Rosemount Measurement
8200 Market Boulevard
Chanhassen MN 55317 USA
Tel (USA) 1 800 999 9307
Tel (International) +1 952 906 8888
Fax +1 952 906 8889

Emerson Process Management
GmbH & Co.
Argelsrieder Feld 3
82234 Wessling
Germany
Tel 49 (8153) 9390
Fax 49 (8153) 939172

Emerson Process Management Asia
Pacific Private Limited
1 Pandan Crescent
Singapore 128461
T (65) 6777 8211
F (65) 6777 0947
Enquiries@AP.EmersonProcess.com

Beijing Rosemount Far East
Instrument Co., Limited
No. 6 North Street,
Hepingli, Dong Cheng District
Beijing 100013, China
T (86) (10) 6428 2233
F (86) (10) 6422 8586

Emerson Process Management
Latin America
1300 Concord Terrace, Suite 400
Sunrise Florida 33323 USA
Tel +1 954 846 5030

ROSEMOUNT®

EMERSON.
Process Management

Quick Installation Guide
00825-0100-4728, Rev BC
March 2011

Rosemount 644H and 644R Smart Temperature Transmitters

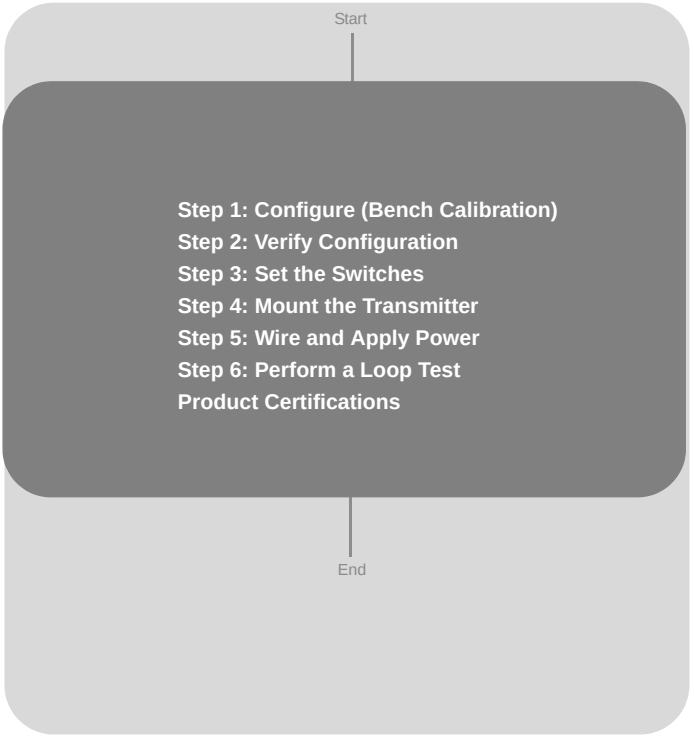

HART COMMUNICATION PROTOCOL

CE

ROSEMOUNT

www.rosemount.com

EMERSON Process Management

© 2011 Rosemount Inc. All rights reserved. All marks property of owner. Rosemount and the Rosemount logotype are registered trademarks of Rosemount Inc.

Emerson Process Management Rosemount Division
8200 Market Boulevard
Chanhassen, MN USA 55317
T (US) (800) 999-9307
T (Intnl) (952) 906-8888
F (952) 949-7001

Emerson Process Management GmbH & Co. OHG
Frankenstrasse 21
63791 Karlstein
Germany
T 49 (6188) 992 0
F 49 (6188) 992 112

Emerson Process Management Asia Pacific Private Limited
1 Pandan Crescent
Singapore 128461
T (65) 6777 8211
F (65) 6777 0947/65 6777 0743

⚠ IMPORTANT NOTICE

This installation guide provides basic guidelines for the Rosemount 644. It does not provide instructions for detailed configuration, diagnostics, maintenance, service, troubleshooting, or installation. Refer to the 644 Reference Manual (document number 00809-0100-4728) for more instruction. The manual and this QIG are also available electronically on www.rosemount.com.

⚠ WARNING

Explosions could result in death or serious injury:

Installation of this transmitter in an explosive environment must be in accordance with the appropriate local, national, and international standards, codes, and practices. Please review the Product Certifications for any restrictions associated with a safe installation. In an Explosion-Proof/Flame-Proof installation, do not remove the transmitter covers when power is applied to the unit.

Process leaks may cause harm or result in death

- Install and tighten thermowells or sensors before applying pressure.
- Do not remove the thermowell while in operation.

Electrical shock can result in death or serious injury

- Avoid contact with the leads and terminals. High voltage that may be present on leads can cause electrical shock.

STEP 1: CONFIGURE (BENCH CALIBRATION)

The 644 communicates using the Field Communicator (communication requires a loop resistance between 250 and 1100 ohms. Do not operate when power is below 12 Vdc at the transmitter terminal). Refer to the 644 Reference Manual (document number 00809-0100-4728) and the Field Communicator Reference Manual (document number 00809-0100-4275) for more information.

Update the Field Communicator Software

The Field Communicator Field Device Revision Dev v6, DD v1 or higher is required for complete functionality. The device will communicate with all previous 644 DD revisions.

Perform the following steps to determine if an upgrade is required.

1. Connect the sensor (see the wiring diagram located on the inside of the housing cover).
2. Connect the bench power supply to the power terminals (“+” or “–”).
3. Connect a Field Communicator to the loop across a loop resistor or at the power/signal terminals on the transmitter.
4. The following message will appear if the communicator has a previous version of the device descriptors (DDs).

   NOTICE: Upgrade the communicator software to access new XMTR functions. Continue with old description?

   NOTE:
   If this notice does not appear, the latest DD is installed. If the latest version is not available, the communicator will communicate properly. But, when the transmitter is configured to utilize the advanced features of the transmitter (such as one of the added sensor input types), the user will experience trouble communicating and will be prompted to turn the communicator off. To prevent this from happening, upgrade to the latest DD or answer NO to the question and default to the generic transmitter functionality.

Figure 1. Connecting a Communicator to a Bench Loop.

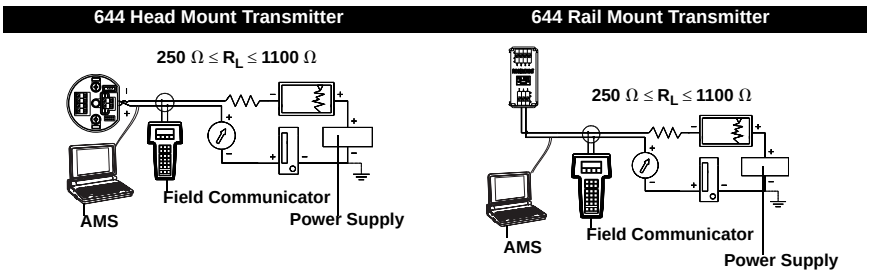

STEP 2: VERIFY CONFIGURATION

The Traditional Interface Fast Key Sequences in Table 1 and Device Dashboard Fast Key Sequences in Table 2 may be used for transmitter configuration and startup.

Field Communicator User Interface

The Traditional Interface Fast Key Sequences can be found on Table 1 on page 5.

Figure 2. Traditional Interface

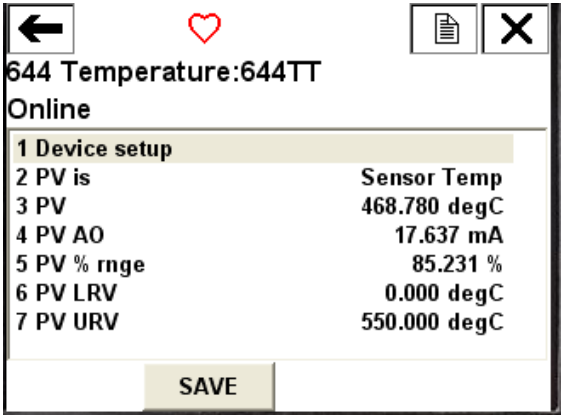

The Device Dashboard Fast Key Sequence can be found on Table 2 on page 6.

Figure 3. Device Dashboard

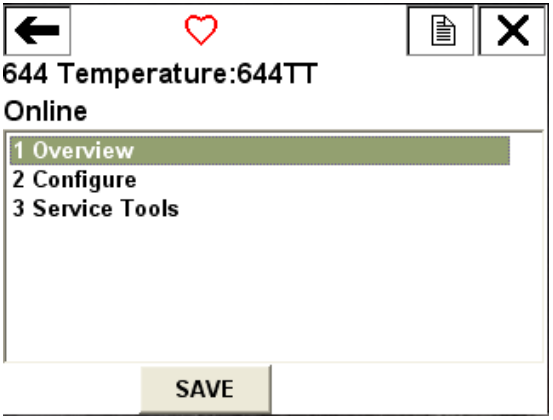

Table 1. Traditional Interface Fast Key Sequences

Function	Fast Keys	Function	Fast Key
Active Calibrator	1, 2, 2, 1, 3	Num Req Preams	1, 3, 3, 3, 2
Alarm/Saturation	1, 3, 3, 2	Open Sensor Holdoff	1, 3, 5, 3
AO Alarm Type	1, 3, 3, 2, 1	Percent Range	1, 1, 5
Burst Mode	1, 3, 3, 3, 3	Poll Address	1, 3, 3, 3, 1
Burst Option	1, 3, 3, 3, 4	Process Temperature	1, 1
Calibration	1, 2, 2	Process Variables	1, 1
Callendar-Van Dusen	1, 3, 2, 1	PV Damping	1, 3, 3, 1, 3
Configuration	1, 3	PV Unit	1, 3, 3, 1, 4
D/A Trim	1, 2, 2, 2	Range Values	1, 3, 3, 1
Damping Values	1, 1, 10	Review	1, 4
Date	1, 3, 4, 2	Scaled D/A Trim	1, 2, 2, 3
Descriptor	1, 3, 4, 3	Sensor Connection	1, 3, 2, 1, 1
Device Info	1, 3, 4	Sensor 1 Setup	1, 3, 2, 1, 2
Device Output Configuration	1, 3, 3	Sensor Serial Number	1, 3, 2, 1, 4
Diagnostics and Service	1, 2	Sensor 1 Trim	1, 2, 2, 1
Filter 50/60 Hz	1, 3, 5, 1	Sensor 1 Trim-Factory	1, 2, 2, 1, 2
Hardware Rev	1, 4, 1	Sensor Type	1, 3, 2, 1, 1
Hart Output	1, 3, 3, 3	Software Revision	1, 4, 1
Intermittent Detect	1, 3, 5, 4	Status	1, 2, 1, 4
LCD Display Options	1, 3, 3, 4	Tag	1, 3, 4, 1
Loop Test	1, 2, 1, 1	Terminal Temperature	1, 3, 2, 2,
LRV (Lower Range Value)	1, 1, 6	Test Device	1, 2, 1
LSL (Lower Sensor Limit)	1, 1, 8	URV (Upper Range Value)	1, 1, 7
Measurement Filtering	1, 3, 5	USL (Upper Sensor Limit)	1, 1, 9
Message	1, 3, 4, 4	Variable Mapping	1, 3, 1
Meter Configuring	1, 3, 3, 4, 1	Variable Re-Map	1, 3, 1, 5
Meter Decimal Point	1, 3, 3, 4, 2	Write Protect	1, 2, 3
		2-Wire Offset	1, 3, 2, 1, 2, 1

Input/Verify Callendar Van-Dusen Constants

If sensor matching is being used with this combination of a transmitter and sensor, verify the constants input.

1. At the **Home** screen, select *1 Device Setup*, *3 Configuration*, *2 Sensor Config*, *1 Sensor 1, 3 Cal Van-Dusen*. Set the control loop to manual. Select **OK**.
2. Select *Cal Van-Dusen* at the **Enter Sensor Type** prompt.
3. Select the appropriate number of wires at the **Enter Sensor Connection** prompt.
4. Enter the R_0, Alpha, Beta, and Delta values from the stainless steel tag attached to the special-order sensor.
5. Select **OK** after you return the control loop to automatic control.

Table 2. Device Dashboard Fast Key Sequences

Function	Fast Keys	Function	Fast Key
Active Calibrator	2, 2, 4, 2	Num Req Preams	2, 2, 5, 2
Alarm/Saturation	2, 2, 2, 6	Open Sensor Holdoff	2, 2, 4, 4
Burst Mode	2, 2, 5, 3	Percent Range	2, 2, 2, 4
Burst Option	2, 2, 5, 4	Poll Address	2, 2, 5, 1
Calibration	2, 1, 2	PV Damping	2, 2, 1, 6
Callendar-Van Dusen	2, 2, 1, 10	PV Unit	2, 2, 1, 4
Configuration	2, 1, 1	Range Values	2, 2, 2, 5
D/A Trim	3, 4, 2	Scaled D/A Trim	3, 4, 3
Damping Values	2, 2, 1, 6	Sensor Connection	2, 2, 1, 3
Date	1, 7, 8	Sensor 1 Setup	2, 2, 1
Descriptor	1, 7, 6	Sensor Serial Number	2, 2, 1, 7
Device Info	1, 7	Sensor 1 Trim	3, 4, 1
Device Output Configuration	2, 2, 2	Sensor 1 Trim-Factory	3, 4, 1, 2
Filter 50/60 Hz	2, 2, 4, 7, 1	Sensor Type	2, 2, 1, 2
Hardware Rev	1, 7, 9, 3	Software Revision	1, 7, 9, 4
Hart Output	2, 2, 5	Tag	2, 2, 4, 1, 1
LCD Display Options	2, 2, 3	Terminal Temperature	3, 3, 2
Loop Test	3, 5, 1	URV (Upper Range Value)	2, 2, 2, 5, 2
LRV (Lower Range Value)	2, 2, 2, 5, 3	USL (Upper Sensor Limit)	2, 2, 1, 8
LSL (Lower Sensor Limit)	2, 2, 1, 9	Variable Mapping	2, 2, 5, 5
Message	1, 7, 7	Variable Re-Map	2, 2, 5, 5, 5
Meter Configuring	2, 2, 3, 1	Write Protect	2, 2, 4, 6
Meter Decimal Point	2, 2, 3, 2	2-Wire Offset	2, 2, 1, 5

Input/Verify Callendar Van-Dusen Constants

If sensor matching is being used with this combination of a transmitter and sensor, verify the constants input.

1. From the **HOME** screen, select *2 Configure, 2 Manual Setup, 1 Sensor.* Set the control loop to manual and select OK.
2. Select *Cal VanDusen* at the **ENTER SENSOR TYPE** prompt.
3. Select the appropriate number of wires at the **ENTER SENSOR CONNECTION** prompt.
4. Enter the R_0, Alpha, Delta, and Beta values from the stainless steel tag attached to the special-order sensor when prompted.
5. Return the control loop to automatic control and select OK.
6. To disable the transmitter-sensor matching feature from the **HOME** screen select *2 Configure, 2 Manual Setup, 1 Sensor, 10 SensorMatching-CVD*. Choose the appropriate sensor type from the **ENTER SENSOR TYPE** prompt.

STEP 3: SET THE SWITCHES

644H (switch on bottom right of electronics module)

Without a LCD Display

1. Set the loop to manual (if applicable) and disconnect the power.
2. Remove the electronics housing cover.
3. Set the switch to the desired position. Reattach housing cover.
4. Apply power and set the loop to automatic control.

With a LCD Display (644H only)

1. Set the loop to manual (if applicable) and disconnect the power.
2. Remove the electronics housing cover.
3. Snap-off the LCD display straight off.
4. Set the switch to the desired position.
5. Reattach the LCD display and electronics housing cover (consider LCD display orientation – rotate in 90 degree increments).
6. Apply power and set the loop to automatic control.

644R (switch on middle of front panel)

1. Open the front door of the 644R Rail Mount Transmitter
2. Set the switch to the desired position.

STEP 4: MOUNT THE TRANSMITTER

Mount the transmitter at a high point in the conduit run to prevent moisture from draining into the transmitter housing.

Typical Connection Head Installation

Head Mount Transmitter with DIN Plate Style Sensor

1. Attach the thermowell to the pipe or process container wall. Install and tighten the thermowell before applying process pressure.
2. Verify the transmitter failure mode switch.
3. Assemble the transmitter to the sensor. Push the transmitter mounting screws through the sensor mounting plate and insert the snap rings (optional) into the transmitter mounting screw groove.
4. Wire the sensor to the transmitter (see Step 4: Connect the Wiring).
5. Insert the transmitter-sensor assembly into the connection head. Thread the transmitter mounting screw into the connection head mounting holes. Assemble the extension to the connection head. Insert the assembly into the thermowell.
6. Slip the shielded cable though the cable gland.
7. Attach a cable gland into the shielded cable.
8. Insert the shielded cable leads into the connection head through the cable entry. Connect and tighten the cable gland.
9. Connect the shielded power cable leads to the transmitter power terminals. Avoid contact with sensor leads and sensor connections.
10. Install and tighten the connection head cover. Enclosure covers must be fully engaged to meet explosion-proof requirements.

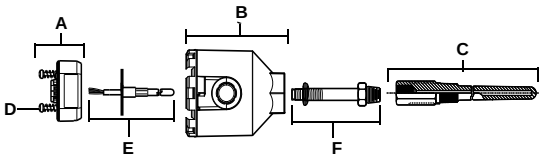

A = 644H Transmitter	D = Transmitter Mounting Screws
B = Connection Head	E = Integral Mount Sensor with Flying Leads
C = Thermowell	F = Extension

STEP 4 CONTINUED...

Typical Universal Head Installation

Head Mount Transmitter with Threaded Sensor

1. Attach the thermowell to the pipe or process container wall. Install and tighten thermowells before applying process pressure.
2. Attach necessary extension nipples and adapters to the thermowell. Seal the nipple and adapter threads with silicone tape.
3. Screw the sensor into the thermowell. Install drain seals if required for severe environments or to satisfy code requirements.
4. Verify the transmitter failure mode switch.
5. Pull the sensor wiring leads through the universal head and transmitter. Mount the transmitter in the universal head by threading the transmitter mounting screws into the universal head mounting holes.
6. Mount the transmitter-sensor assembly into the thermowell. Seal adapter threads with silicone tape.
7. Install conduit for field wiring to the conduit entry of the universal head. Seal conduit threads with silicone tape.
8. Pull the field wiring leads through the conduit into the universal head. Attach the sensor and power leads to the transmitter. Avoid contact with other terminals.
9. Install and tighten the universal head cover. Enclosure covers must be fully engaged to meet explosion-proof requirements.

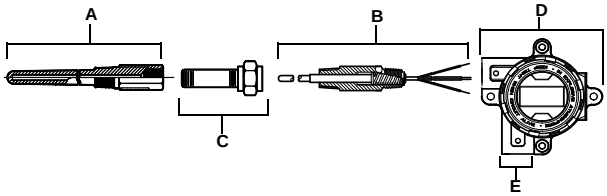

A = Threaded Thermowell
B = Threaded Style Sensor
C = Standard Extension
D = Universal Head (transmitter inside)
E = Conduit Entry

STEP 4 CONTINUED...

Rail Mount Transmitter and Sensor

1. Attach the transmitter to a suitable rail or panel.
2. Attach the thermowell to the pipe or process container wall. Install and tighten the thermowell, according to plant standards, before applying pressure.
3. Attach the sensor to the connection head and mount the entire assembly to the thermowell.
4. Attach and connect sufficient lengths of sensor lead wire from the connection head to the sensor terminal block.
5. Tighten the connection head cover. Enclosure covers must be fully engaged to meet explosion-proof requirements.
6. Run sensor lead wires from the sensor assembly to the transmitter.
7. Verify the transmitter failure mode switch.
8. Attach the sensor wires to the transmitter (see Step 4: Connect the Wiring for more information).

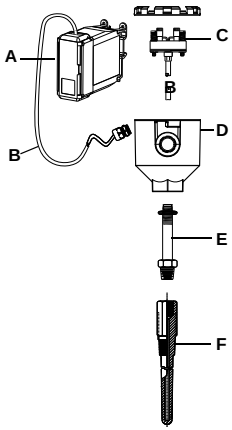

A = Rail Mount Transmitter
B = Sensor Leads with Cable Glands
C = Integral Mount Sensor with Terminal Block
D = Connection Head
E = Standard Extension
F = Threaded Thermowell

STEP 4 CONTINUED...

Rail Mount Transmitter with Threaded Sensor

1. Attach the transmitter to a suitable rail or panel.
2. Attach the thermowell to the pipe or process container wall. Install and tighten the thermowell before applying pressure.
3. Attach necessary extension nipples and adapters. Seal the nipple and adapter threads with silicone tape.
4. Screw the sensor into the thermowell. Install drain seals if required for severe environments or to satisfy code requirements.
5. Screw the connection head to the sensor.
6. Attach the sensor lead wires to the connection head terminals.
7. Attach additional sensor lead wires from the connection head to the transmitter.
8. Attach and tighten the connection head cover. Enclosure covers must be fully engaged to meet explosion-proof requirements.
9. Set the transmitter failure mode switch.
10. Attach the sensor wires to the transmitter (see Step 4: Connect the Wiring for more information).

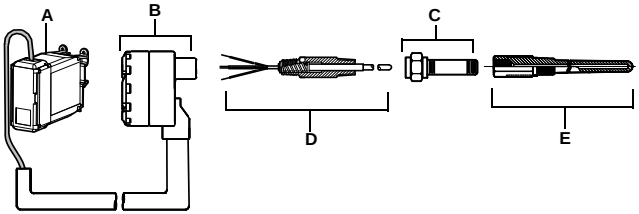

A = Rail Mount Transmitter
B = Threaded Sensor Connection Head
C = Standard Extension
D = Threaded Style Sensor
E = Threaded Thermowell

STEP 5: WIRE AND APPLY POWER

Wire the Transmitter

- Wiring diagrams are located inside the terminal block cover.

Sensor Connections Diagram

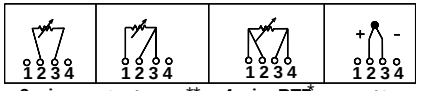

2-wire RTD and Ω | **3-wire RTD* and Ω** | **4-wire RTD* and Ω** | **T/C and mV**

** The transmitters must be configured for at least a 3-wire RTD in order to recognize an RTD with a compensation loop.*

*** Rosemount Inc. provides 4-wire sensors for all single element RTDs. Use these RTDs in 3-wire configurations by leaving the unneeded leads disconnected and insulated with electrical tape.*

Power the Transmitter

1. An external power supply is required to operate the transmitter.
2. Remove the terminal block cover (if applicable).
3. Connect the positive power lead to the "+" terminal. Connect the negative power lead to the "–" terminal.
4. Tighten the terminal screws. When tightening the sensor and power wires, the max torque is 6 in.-lbs (0.7 N-m).
5. Reattach and tighten the cover (if applicable).
6. Apply power (12 – 42 Vdc).

644H

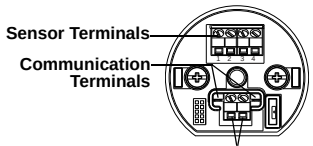

644R

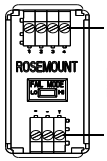

Sensor Terminals

Max torque is 6 in.-lbs (0/7 N-m)

Power/Configuration Terminals

Load Limitation

- The power required across the transmitter power terminals is 12 to 42.4 Vdc (the power terminals are rated to 42.4 Vdc). To prevent damaging the transmitter, do not allow terminal voltage to drop below 12.0 Vdc when changing the configuration parameters.

STEP 5 CONTINUED...

Ground the Transmitter

Ungrounded Thermocouple, mV, and RTD/Ohm Inputs

Each process installation has different requirements for grounding. Use the grounding options recommended by the facility for the specific sensor type, or begin with grounding Option 1 (the most common).

Option 1:

1. Connect sensor wiring shield to the transmitter housing.
2. Ensure the sensor shield is electrically isolated from surrounding fixtures that may be grounded.
3. Ground signal wiring shield at the power supply end.

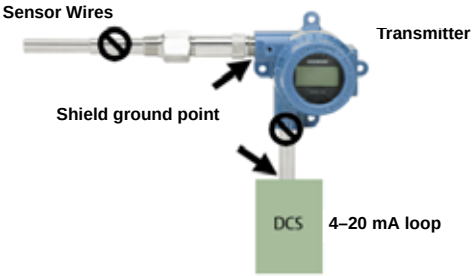

Option 2:

1. Connect signal wiring shield to the sensor wiring shield.
2. Ensure the two shields are tied together and electrically isolated from the transmitter housing.
3. Ground shield at the power supply end only.
4. Ensure that the sensor shield is electrically isolated from the surrounding grounded fixtures.

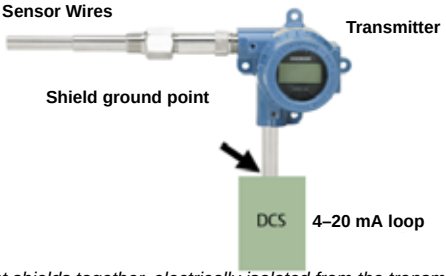

Connect shields together, electrically isolated from the transmitter

STEP 5 CONTINUED...

Option 3:

1. Ground sensor wiring shield at the sensor, if possible.
2. Insure that the sensor wiring and signal wiring shields are electrically isolated from the transmitter housing.
3. Do not connect the signal wiring shield to the sensor wiring shield.
4. Ground signal wiring shield at the power supply end.

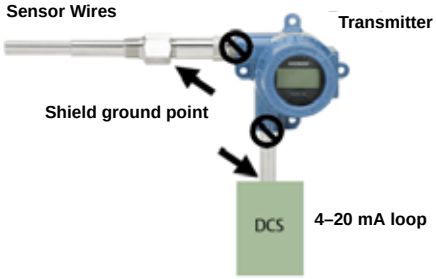

Grounded Thermocouple Inputs

Option 4

1. Ground sensor wiring shield at the sensor.
2. Ensure that the sensor wiring and signal wiring shields are electrically isolated from the transmitter housing.
3. Do not connect the signal wiring shield to the sensor wiring shield.
4. Ground signal wiring shield at the power supply end.

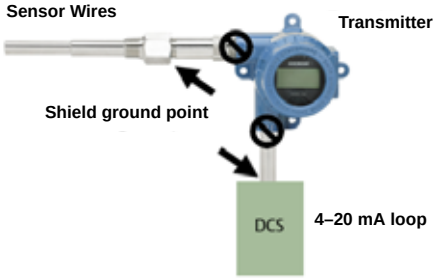

STEP 6: PERFORM A LOOP TEST

The Loop Test command verifies transmitter output, loop integrity, and operation of any recorders or similar devices installed in the loop.

Traditional Interface

Initiate a loop test:

1. Connect an external ampere meter in series with the transmitter loop (so the power to the transmitter goes through the meter at some point in the loop.)
2. From the home screen select:
   644H and 644R:
   1 Device Setup, *2 Diag/Serv*, *1 Test Device*, *1 Loop Test*.
3. Select a discrete milliampere level for the transmitter to output. At **Choose Analog Output** select *1 4mA*, *2 20mA* or select *3 Other* to manually input a value between 4 and 20 milliamperes. Select **Enter** to show the fixed output. Select **OK**.
4. In the test loop, check that the transmitter's actual mA output and the HART mA reading are the same value. If the readings do not match, either the transmitter requires an output trim or the current meter is malfunctioning.
5. After completing the test, the display returns to the loop test screen and allows the user to choose another output value. To end the Loop Test, Select *5 End* and **Enter**.

Device Dashboard

Initiate a loop test

1. Connect an external ampere meter in series with the transmitter loop (so the power to the transmitter goes through the meter at some point in the loop.)
2. From the home screen select:
   644H and 644R:
   3 Service Tools, 5 Simulate, *1 Loop Test*.
3. Select a discrete milliampere level for the transmitter to output. At **Choose Analog Output** select *1 4mA*, *2 20mA* or select *3 Other* to manually input a value between 4 and 20 milliamperes. Select **Enter** to show the fixed output. Select **OK**.
4. In the test loop, check that the transmitter's actual mA output and the HART mA reading are the same value. If the readings do not match, either the transmitter requires an output trim or the current meter is malfunctioning.

After completing the test, the display returns to the loop test screen and allows the user to choose another output value. To end the Loop Test, Select *5 End* and **Enter**.

PRODUCT CERTIFICATIONS

Approved Manufacturing Locations

Emerson Process Management Rosemount Division. – Chanhassen, Minnesota, USA
Rosemount Temperature GmbH – Germany
Emerson Process Management Asia Pacific – Singapore

European Union Directive Information

The EC declaration of conformity for all applicable European directives for this product can be found on the Rosemount website at www.rosemount.com. A hard copy may be obtained by contacting our local sales representative.

ATEX Directive (94/9/EC)

Rosemount Inc. complies with the ATEX Directive.

Electro Magnetic Compatibility (EMC) (89/336/EEC)

644H and 644R – EN 50081-1: 1992; EN 50082-2:1995;
EN 61326-1:1997 +AI

NAMUR NE 21 Recommendations

The 644H HART meets the NAMUR NE 21 Rating requirements

Susceptibility	Parameter	Influence
ESD	• 6 kV contact discharge • 8 kV air discharge	None
Radiated	• 80 – 1000 MHz at 10 V/m AM	< 0.5%
Burst	• 1 kV for I.O.	None
Surge	• 0.5 kV line–line • 1 kV line–ground (I.O. tool)	None
Conducted	• 150 kHz to 80 MHz at 10 V	< 0.5%

CE Mark

The 644H and 644R meet all requirements listed under IEC 61326:Amendment 1, 1998

Hazardous Locations Certificates

North American Certifications

Factory Mutual (FM) Approvals

I5 FM Intrinsic Safety and Non-incendive:
Intrinsically Safe for Class I/II/III, Division 1, Groups A, B, C, D, E, F, and G. Non-incendive for Class I, Division 2, Groups A, B, C, and D. Intrinsically Safe and non-incendive when installed in accordance with Rosemount drawing 00644-0009.

Table 3. Temperature Code

Pi	Temperature Code
0.67 W	T5 (T_{amb} = – 50 °C to 50 °C)
0.67 W	T6 (T_{amb} = – 50 °C to 40 °C)
1.0 W	T4 (T_{amb} = – 50 °C to 80 °C)
1.0 W	T5 (T_{amb} = – 50 °C to 40 °C)

E5 FM Explosion-Proof and Non-incendive:
Explosion-Proof for Class I, Division 1, Groups B, C, and D. Dust Ignition Proof for Class II/III, Division 1, Groups E, F, and G when installed per Rosemount Drawing 00644-1049. Non-incendive for Class 1, Division 2, Groups A, B, C, and D.
Temperature Code: T5 (T_{amb}= –50 °C to 85 °C)
Conduit seal not required for compliance with NEC501–5a(1).

Note

Approval E5 is only available with 644H option codes J5 and J6.

K5 Combination of I5 and E5.

Note

K5 is only available with 644H option code J6.

Canadian Standards Association (CSA) Approvals

I6 CSA Intrinsic Safety
Intrinsically Safe for Class I, Division 1, Groups A, B, C, and D when installed in accordance with Rosemount drawing 00644–1064.

Table 4. Temperature Code

Pi	Temperature Code
0.67 W	T6 (T_{amb} = – 50 °C to 40 °C)
0.67 W	T5 (T_{amb} = – 50 °C to 60 °C)
1.0 W	T4 (T_{amb} = – 50 °C to 80 °C)

K6 CSA Intrinsic Safety, Explosion–Proof, and Non-incendive.
Combination of I6 and Explosion–proof for Class I, Division 1, Groups B, C, and D; Dust-ignition proof for Class II, Division 1, Groups E, F, and G; Class III, Division 1 hazardous locations, when installed in accordance with Rosemount drawing 00644–1059.
Suitable for Class I, Division 2, Groups B, C, and D when installed in a suitable enclosure.
Temperature Code: Ambient Limits –50 °C to 85 °C.

Note

K6 is only available with 644H option code J6.

European Certifications

CENELEC ATEX Approvals

I1 CENELEC Intrinsic Safety:
Certificate Number: BAS00ATEX1033X
ATEX Marking: ⟨Ex⟩ II 1 G EEx ia IIC T4/T5/T6
CE 1180

Table 5. Temperature Code

Pi	Temperature Code
0.67 W	T6 (T_{amb} = – 60 °C to 40 °C)
0.67 W	T5 (T_{amb} = – 60 °C to 50 °C)
1.0 W	T5 (T_{amb} = – 60 °C to 40 °C)
1.0 W	T4 (T_{amb} = – 60 °C to 80 °C)

Table 6. Entity Parameters

Loop/Power	Sensor
U_i = 30 V	U_o = 13.6 V
I_i = 200 mA	I_o = 80 mA
P_i = 0.67 W or 1.0 W	P_o = 80 mW
C_i = 10 nF	C_i = 75 nF
L_i = 0	L_i = 0

Special Conditions for Safe Use (X):

The transmitter must be installed so that its external terminals and communication pins are protected to at least IP20.

Non-metallic enclosures must have a surface resistance of less than 1 GΩ. Light alloy or zirconium enclosures must be protected from impact and friction when installed.

E1 CENELEC Flame-Proof:
Certificate Number: KEMA99ATEX8715
ATEX Marking: ⟨Ex⟩ II 2 G EEx d IIC T6
CE 1180
Temperature Code: T6 (T_{amb}=–40 °C to 65 °C)
Max Input Voltage: U_i=55 Vdc

N1 CENELEC Type n:
Certificate Number: BAS00ATEX3145
ATEX Marking: ⟨Ex⟩ II 3 G EEx nL IIC T5
Temperature Code: T5 (T_{amb}=–40 °C to 70 °C)
Max Input Voltage: U_i=45 Vdc

NC CENELEC Type n Component:
Certificate Number: BAS99ATEX3084U
ATEX Marking: ⟨Ex⟩ II 3 G EEx nL IIC T5
Temperature Code: T5 (T_{amb}=–40 °C to 70 °C)
Max Input Voltage: U_i=45 Vdc

Note

The equipment must be installed in an enclosure meeting the requirements of IP54 and the requirements of the impact tests described in EN50021.

IECEx Certifications

E7 IECEx Flameproof and Dust
Certificate No.: IECEx KEM 09.0015X
Ex d IIC T6 (Flameproof)
Ex tD A20 IP 66 T 95 ºC (Dust)
Vmax = 42.4 V

Special Conditions for Safe Use (X):
For information on the dimensions of the flameproof joints the manufacturer shall be contacted.

Table 7. Electrical Data

Transmitter	Sensor
U_{max} = 42.4 Vdc	U_{max} = 5 V
I_{max} = 24.0 mA	I_{max} = 2.0 mA

I7 IECEx Intrinsic Safety
Certificate Number: IECEx BAS 07.0053X
Ex ia IIC T4/T5/T6 See Table 9.

Special Conditions for Safe Use (X):
1. The apparatus must be installed in an enclosure which affords it a degree of protection of at least IP20.
2. Non-metallic enclosures must have a surface resistance of less than 1 gigaohm; light alloy or zirconium enclosures must be protected from impact and friction when installed.

Table 8. Input Entity Parameters

Loop / Power	Sensor
U_i = 30 Vdc	U_o = 13.6 Vdc
I_i = 200 mA	I_o = 80 mA
P_i = 0.67 W or 1.0 W	P_o = 80 mW
C_i = 10 nF	C_i = 75 nF
L_i = 0 mH	L_i = 0

Table 9. Temperature Classification

Pi (W)	Temperature Class	Ta
0.67	T6	-60 °C to +40 °C
0.67	T5	-60 °C to +50 °C
1.0	T5	-60 °C to +40 °C
1.0	T4	-60 °C to +80 °C

N7 IECEx Type n
Certificate Number: IECEx BAS 07.0055
Ex nA nL IIC T5 (-40 °C < Ta < 70 °C)

Table 10. Electrical Data

	Sensor	
Transmitter	RTD	Thermocouple
Ui = 42.4 V	Ui = 5 V	Ui = 0

NG IECEx Type n Component
Certificate Number: IECEx BAS 07.0054U
Ex nA nL IIC T5 (-40 °C < Tamb < 75 °C)
Input Parameter: Ui = 42.4 Vdc

Schedule of Limitations:
The component must be housed in a suitably certified enclosure that provides a degree of protection of at least IP54.

Brazilian Certifications

Centro de Pesquisas de Energia Eletrica (CEPEL) Approval

I2 CEPEL Intrinsic Safety. Not available, consult factory

Japanese Certifications

Japanese Industrial Standard (JIS) Approvals

E4 JIS Explosion-Proof

Table 11. Certificate and Description

Certificate	Description	Approval Group	Temp Code
C15744	644H with meter and no sensor	Ex d II C	T6
C15745	644H without meter and no sensor	Ex d II C	T6
C15749	644H without meter and with RTD	Ex d II B	T4
C15750	644H without meter and with thermocouple	Ex d II B	T4
C15751	644H with meter and with thermocouple	Ex d II B	T4
C15752	644H with meter and with RTD	Ex d II B	T4
C15910	644H without meter and with thermocouple	Ex d II B + H2	T4
C15911	644H with meter and with thermocouple	Ex d II B + H2	T4
C15912	644H without meter and with RTD	Ex d II B + H2	T4
C15913	644H with meter and with RTD	Ex d II B + H2	T4

Russian Certifications

Gostandart

Tested and approved by the Russian Metrological Institute GOSTANDART.

ROSEMOUNT

CE

EC Declaration of Conformity

No: RMD 1016 Rev. F

We,

Rosemount Inc.
8200 Market Boulevard
Chanhassen, MN 55317-6985
USA

declare under our sole responsibility that the product,

Models 644 Smart Temperature Transmitter (Hart & Fieldbus)

manufactured by,

Rosemount Inc.
12001 Technology Drive
Eden Prairie, MN 55344-3695
USA

to which this declaration relates, is in conformity with the provisions of the European Community Directives as shown in the attached schedule.

Assumption of conformity is based on the application of the harmonized standards and, when applicable or required, a European Community notified body certification, as shown in the attached schedule.

(signature)	Vice President of Global Quality (function name - printed)
Timothy J. Layer (name - printed)	24-March-2008 (date of issue)

EMERSON. Process Management

File ID: 644 CE Marking *Page 1 of 3* J:\A_Temp\certs\644_RMD1016F.doc

ROSEMOUNT

CE

Schedule

EC Declaration of Conformity RMD 1016 Rev. F

EMC Directive (2004/108/EC)

Models 644HA Smart Temperature Transmitters (Hart)
EN 61326: 1997 + A1/A2/A3 -- Industrial

Models 644HF Smart Temperature Transmitters (Fieldbus)
EN 61326: 1997 + A1/A2/A3 -- Industrial

Models 644RA Smart Temperature Transmitters (Hart)
EN 61326: 1997 + A1/A2/A3 -- Industrial

ATEX Directive (94/9/EC)

Models 644HA Smart Temperature Transmitters (Hart)

Ex ia IIC: BAS00ATEX1033X -- Intrinsically Safe Certificate
EN 60079-0: 2006, EN 60079-11: 2007

Ex nL IIC: BAS00ATEX3145 -- Type n Certificate
EN 60079-0: 2006, EN 60079-15: 2005

Ex nL IIC: BAS99ATEX3084U -- Type n Component Certificate
EN 60079-0: 2006, EN 60079-15: 2005

EEx d IIC: KEMA 99ATEX8715 -- Flameproof Certificate
EN50014: 1997 + A1, A2, prA3, EN50018: 1994 + prA1…prA3

Models 644HF Smart Temperature Transmitters (Fieldbus)

Ex ia IIC: Baseefa03ATEX0499X -- Intrinsically Safe Certificate
EN 60079-0: 2006, EN 60079-11: 2007

Ex nL IIC: BAS00ATEX3145 -- Type n Certificate
EN 60079-0: 2006, EN 60079-15: 2005

Ex nL IIC: BAS99ATEX3084U -- Type n Component Certificate
EN 60079-0: 2006, EN 60079-15: 2005

EMERSON. Process Management

File ID: 644 CE Marking *Page 2 of 3* J:\A_Temp\certs\644_RMD1016F.doc

ROSEMOUNT

Models 644HF Smart Temperature Transmitters (Fieldbus) - continued

EEx d IIC: KEMA 99ATEX8715 -- Flameproof Certificate
EN50014: 1997 + A1, A2, prA3, EN50018: 1994 + prA1…prA3

Models 644RA Smart Temperature Transmitters (Hart)

Ex ia IIC: BAS00ATEX1033X -- Intrinsically Safe Certificate
EN 60079-0: 2006, EN 60079-11: 2007

Ex nL IIC: BAS00ATEX3145 -- Type n Certificate
EN 60079-0: 2006, EN 60079-15: 2005

Ex nL IIC: BAS99ATEX3084U -- Type n Component Certificate
EN 60079-0: 2006, EN 60079-15: 2005

ATEX Notified Bodies for EC Type Examination Certificate

Baseefa (2001) Ltd [Notified Body Number: 1180]
Health and Safety Laboratory Site
Harpur Hill
Buxton, Derbyshire SK17 9JN
United Kingdom

KEMA (KEMA) [Notified Body Number: 0344]
Utrechtseweg 310, 6812 AR Arnhem
P.O. Box 5185, 6802 ED Arnhem
The Netherlands
Postbank 6794687

ATEX Notified Body for Quality Assurance

Baseefa(2001) Ltd [Notified Body Number: 1180]
Health and Safety Laboratory Site
Harpur Hill
Buxton, Derbyshire SK17 9JN
United Kingdom

EMERSON. Process Management

Grove Ball & Gate Valves

Valgro Plant Prefix	Model Number	Nominal Size	Port Size	ANSI Pressure Class	End Connection Code	Pipe Schedule Code	Operator Code	Trim Code (Trim, Temp, NACE)	Option Code
9K-	4B - B4B	02 - 2"	F - Full Port	01 - 150	O - Other	A - Sch 10	0 - Not Extended, Bare Stem	A - Low Temp, Sour	X001 - Locking Device
	4C - B4C	03 - 3"	R - Reduced	03 - 300	W - Weld x Weld	B - Sch 20	1 - Not Extended, Gear Operator	B - Low Temp, Non-Sour	X002 - 17-4 PH SS Stem
	50 - B5	04 - 4"		06 - 600	F - RF Flange x RF Flange	C - Sch 30	2 - Not Extended, Lever/Handwheel	C - Std Temp, Sour	X003 - 17-4 PH Stem, 316/CF8M Ball, Locking Device, Ported Relief, Body Injection
	5B - B5B	06 - 6"		09 - 900	R - RTJ Flange x RTF	D - STD	3 - Extended, Bare Stem	D - Std Temp, Non-Sour	X004 - Ported Relief
	4N - G4N	08 - 8"		15 - 1500	M - Weld x RF Flange	E - Sch 40	4 - Extended, Gear Operated	E - Hi Temp (Non-Sour)	X005 - Bare Stem less spacer
	40 - G4	10 - 10"		25 - 2500	N - Weld x RTJ Flange	F - Sch 60	5 - Extended, Lever/Handwheel	E - Hi Temp (Sour)	X006 - Becker Spec C.9003-2006
	12 - G12	12 - 12"			T - Threaded	G - XH	6 - Not Extended, Special Operator	F - Slurry	X007 - 2400mm Extension, Locking Device, w/12" X 9.5 mm Gr. 359 Pipe
		16 - 16"			L - Socket Weld	H - Sch 80	7 - Extended, Special Operator	G - Full Stainless	X008 - SS Ball & Stem
		18 - 18"			K - Techloc	I - Sch 100		H - MTBE Service	X009 - SS Ball & Stem w/carseal
		20 - 20"			X - Flat Face	J - Sch 120		I - Highly Corrosive (Sour)	X010 - 3400mm ext'n CL to CL Handwheel /W PUPS
		22 - 22"			G - Grayloc	K - Sch 140		J - Hydrogen	X011 - G12 POLYPACK DESIGN (4)
		24 - 24"				L - Sch 160		K - Amines	X012 - 3300mm ext'n CL to CL Handwheel /W PUPS
		30 - 30"				M - XXH		L - Acid Gas (H2S & CO2)	X013 - 3300mm ext'n CL to CL Handwheel /W PUPS
		34 - 34"				S - Special		T - Talisman Basic	X014 - 3300mm ext'n CL to CL Handwheel /W PUPS
		36 - 36"				O - N/A			X015 - Stem Injection
						See notes 1 & 2			X016 - 3 mil ENC
									X017 - Ported Relief, Retained Key
									X018 - Ported Relief, Retained Key, Stem Injection
									X019 - Talisman Monkman
									X020 - Talisman Sukunka
									X021 - SS Ball/Stem, HSN Seals
									X022 - 17-4 PH/DUPLEX Stem, 316/ENC Ball, 316 Seat Rings, Teflon Seats, Viton Seals, Locking Device, Ported Relief, Impreglon Closures, Impreglon 222M on Wetted Body, Body Injection
									X023 - 17-4 PH/DUPLEX Stem, 316/ENC Ball, 316 Seat Rings, Viton Seats & Seals, Locking Device, Ported Relief, Stem Injection
									X024 - 17-4 PH/DUPLEX Stem, 316/ENC Ball, 316 Seat Rings, Viton Seats & Seals, Locking Device, Ported Relief, Impreglon Closures, Body Injection, Impreglon Body
									X025 - SS Ball/Stem/Seats, Viton Seals

Notes:
1. For Size, 10" & Below Schedule 40 & Std Wall Pipe are Identical. Use Code D (Std Wall) to describe either.
2. For Size 8" & Below Schedule 80 & XH Wall Pipe are Identical. Use Code G (XH Wall) to describe either.
3. Option Code will be Generated & Logged in Database Maintained by Engineering

Example: 6"x4" Class 600 B4C Ball Valve, Bare Stem (Non-Extended), Sch 40 BW X BW Ends, Category II, Nace Trim w/ 17-4 PH SS Stem

9K-4C06R06WDOAX002

(X003 is the Option Code for 17-4 PH SS Stem)

GROVE

GROVE Series B-5, B-4B & B-4C Ball Valve
INSTALLATION & MAINTENANCE MANUAL

Series B-4B & B-4C



WRENCH OPERATED, 2″ - 4″

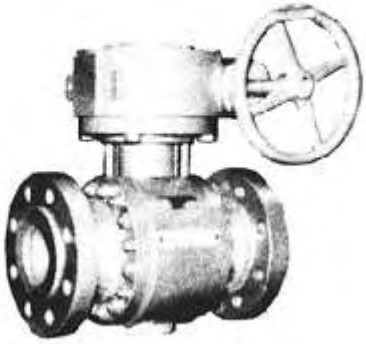

GEAR OPERATED, 2″ - 4″

Series B-5

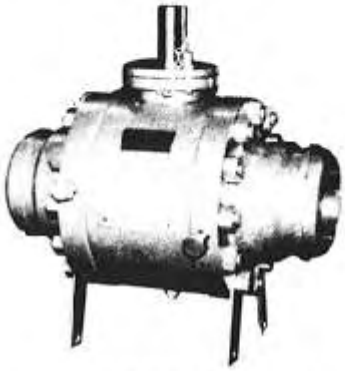

WRENCH OPERATED, 6″ - 12″

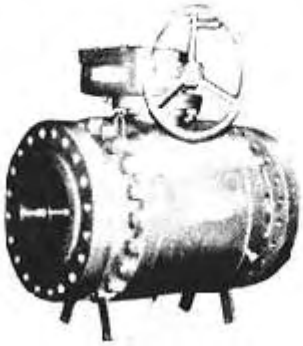

GEAR OPERATED, 6″ - 48″

COOPER CAMERON VALVES

INDEX

Section A Series B-5 Ball Valves

I. GENERAL INFORMATION 1
II. VALVE INSTALLATION 1
III. ON STREAM MAINTENANCE 1
A. BLOCK AND BLEED 1
B. STEM O-RING REPLACEMENT 2
C. EMERGENCY SHUT-OFF 3
D. IN-LINE HYDROSTATIC TESTING 3
IV. OFF STREAM MAINTENANCE 4
A. DISASSEMBLY PROCEDURE 4
B. INSPECTION AND CLEANING 5
C. LUBRICATION 5
D. REASSEMBLY 5
E. TESTING FOR LEAKAGE 8
V. ACCESSORY INSTALLATION 8
A. SY (SCOTCH YOKE) OPERATOR; MOUNTING AND SETTING STOPS 8
B. OPERATOR EXTENSIONS-FIELD MOUNTING 9
VI. MISCELLANEOUS 10
A. BOLTING TORQUES 10
B. TOP MOUNTING DIMENSIONS 11
C. DRAWINGS–RECOMMENDED SPARE PARTS 12,13

Section B Series B-4B & B-4C Ball Valves

VII. GENERAL INFORMATION 14
VIII. VALVE INSTALLATION 14
IX. ON STREAM MAINTENANCE 14
A. BLOCK AND BLEED 14
B. STEM O-RING REPLACEMENT 14
C. IN-LINE HYDROSTATIC TESTING 15
X. OFF STREAM MAINTENANCE 15
A. DISASSEMBLY PROCEDURE 16
B. INSPECTION AND CLEANING 16
C. LUBRICATION 16
D. REASSEMBLY 16
E. TESTING FOR LEAKAGE 18
XI. ACCESSORY INSTALLATION 19
A. MOUNTING GEAR OPERATORS AND SETTING STOPS 19
XII. MISCELLANEOUS 20
A. BOLTING TORQUES 20
B. DRAWINGS–RECOMMENDED SPARE PARTS 21, 22

Section A (Series B-5 Ball Valves)

PART I - General Information

DESIGN

All Grove ball valves are non-directional and can be installed with either end upstream. Flanged-end valves (sizes 24" & smaller, except 22") have flanges faced and drilled in accordance with ANSI B16.5. 22" and sizes 26" and larger conform to MSS SP-44. Face-to-face and end-to-end dimensions conform to API Spec. 6-D, Table 4.4, "Flanged-End and Welding-End Ball Valves-Full Bore and Reduced Bore".

BLOCK & BLEED

All current B-5 valves have body drain ports per MSS-SP-45, i.e. 3/4" NPT for 6-8" valves and 1" NPT for 10" and up. A special vent valve is supplied as a standard feature for Block & Bleed service.

EMERGENCY SEAT SEALANT SYSTEM

1/2" NPT steel fittings with giant button heads are installed in the mid-section of both closures. On valves 22" and larger, dual fittings are provided on both the front and back side of the valve. Section III-C describes the function of the sealant system.

FIELD WELDABILITY - WELDING END VALVES

Grove ANSI ball valves with welding end connection(s) utilize ASTM A-36, A-572 GR 50, A-537, A-216 GR WCB, A-350 LF2, A-105, and A-106 GR B steel. All are readily field weldable. When welding Grove valves in the line, standard field welding techniques and procedures are satisfactory.

BODY RELIEF VALVE

To protect the body from thermal over pressure in above ground liquid service when valve is in the closed position, a 1/2" NPT steel body Relief Valve, located in the upper body area, is furnished. It has been factory adjusted to a nominal relief setting of 1.6 x rated pressure.

A small hole in the ball equalizes line pressure and body pressure when the valve is in the open position.

PART II - Valve Installation

A. EQUIPMENT

Handling equipment is required for the weight involved. The current Grove Ball Valve catalog furnishes the weight of the specific valve.

B. PROCEDURE

1. Remove end connection protectors.
2. Inspect valve bore for foreign matter and clean, if necessary. Valves are shipped with ends sealed, but during transit foreign material may be introduced into the bore.
3. Install in line; either end may be installed upstream.
4. Install vent valve, if not already factory-installed.
5. On valves having extensions, check all extension piping and fittings to ensure that all are tight prior to placing valve in service.
6. The seat sealant system is intended only for emergency shut-off. Do **not** lube. (See Part III-C).

PART III - On Stream Maintenance

This part covers maintenance and repair which can be performed without removing the valve from the line.

A. BLOCK AND BLEED

With the line under pressure the valve body cavity can be vented to atmosphere and completely drained down with the ball in the CLOSED POSITION ONLY. The valve body cavity may be drained and flushed by: (1) removing the special vent valve after pressure has been vented, (2) removing the 1/2" NPT relief valve from the upper body area, and (3) flushing through upper relief valve connection and allowing drainage through the lower vent plug connection.

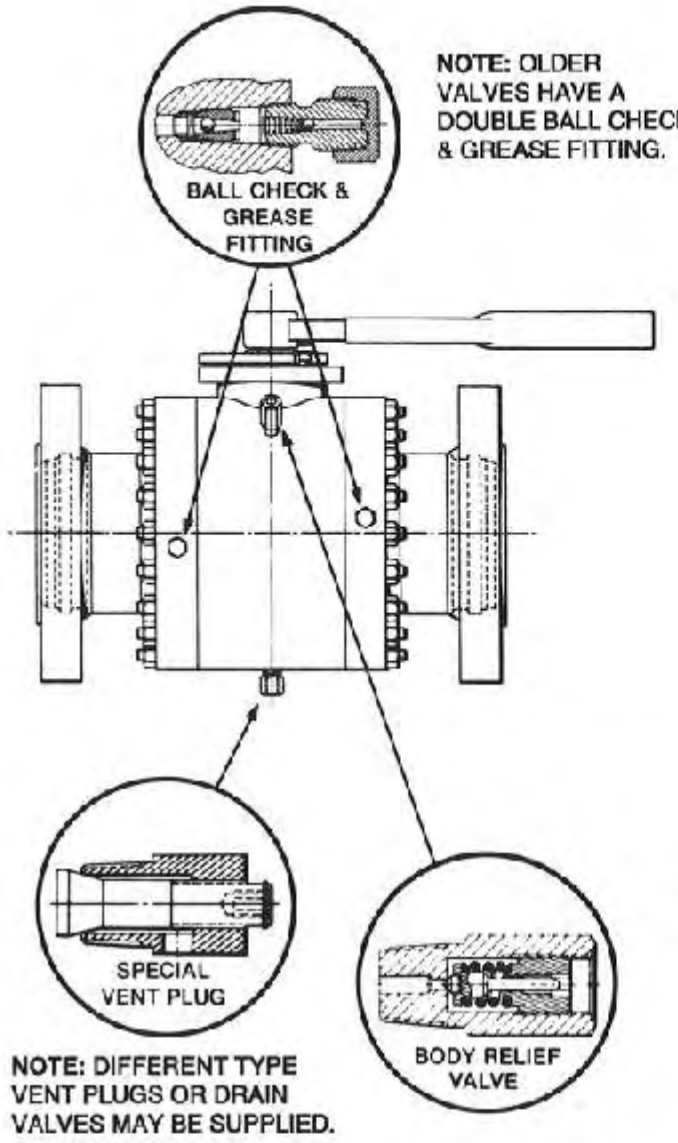

NOTE: OLDER VALVES HAVE A DOUBLE BALL CHECK & GREASE FITTING.

NOTE: DIFFERENT TYPE VENT PLUGS OR DRAIN VALVES MAY BE SUPPLIED.

B. STEM SEAL O-RING REPLACEMENT

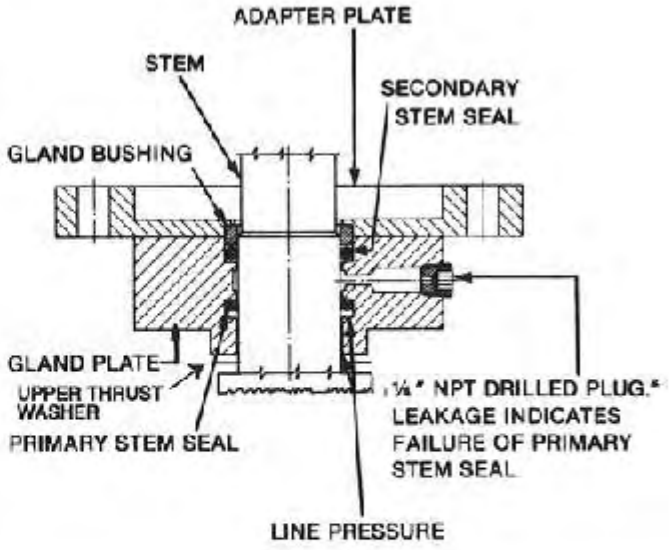

NOTE: ON NEWER VERSIONS OF THE B-5 BALL VALVE, THE ADAPTOR PLATE AND STOP COLLAR ARE ONE PIECE. (SEE FIG. A & B, PAGE 2)

* On newer valves a needle valve is supplied in lieu of a vent plug.

The B-5 has two stem seals, one primary seal, backed up by a second independent seal.

If the primary O-Ring seal becomes faulty, a leak will occur through the gland plate vent plug.* In this case remove 1/4" vent plug* and replace with 1/4" solid plug to energize the secondary O-Ring seal.

1. To verify the integrity of the primary stem seal, open the needle on the vent assembly plug*. If the primary seal is faulty, close the needle valve to energize the secondary seal.

STOP COLLAR
1963 - 1990

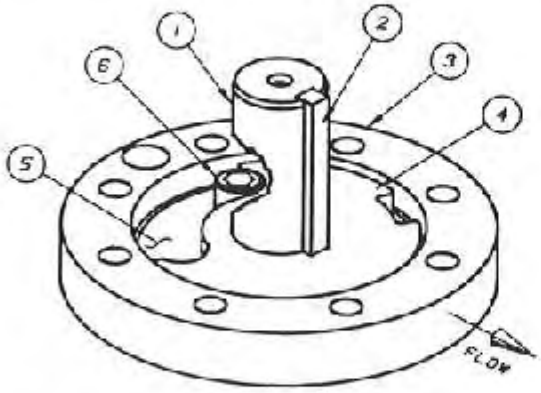

FIG. A

1. STEM
2. KEY
3. ADAPTER PLATE
4. STOP COLLAR
5. NYLON WASHER
6. STOP CAPSCREW

KEY STOP
1991 -

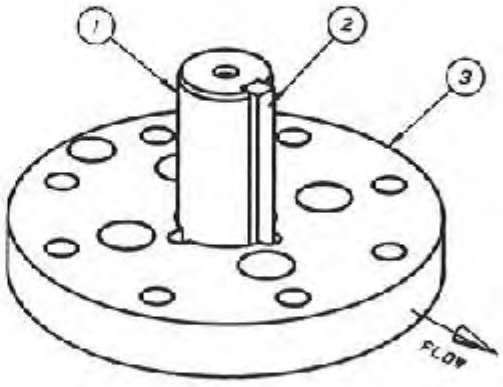

FIG. B

1. STEM
2. KEY
3. ADAPTER PLATE

SHOULD SEALS LEAK, THEY MAY BE REPLACED BY THE FOLLOWING PROCEDURE.

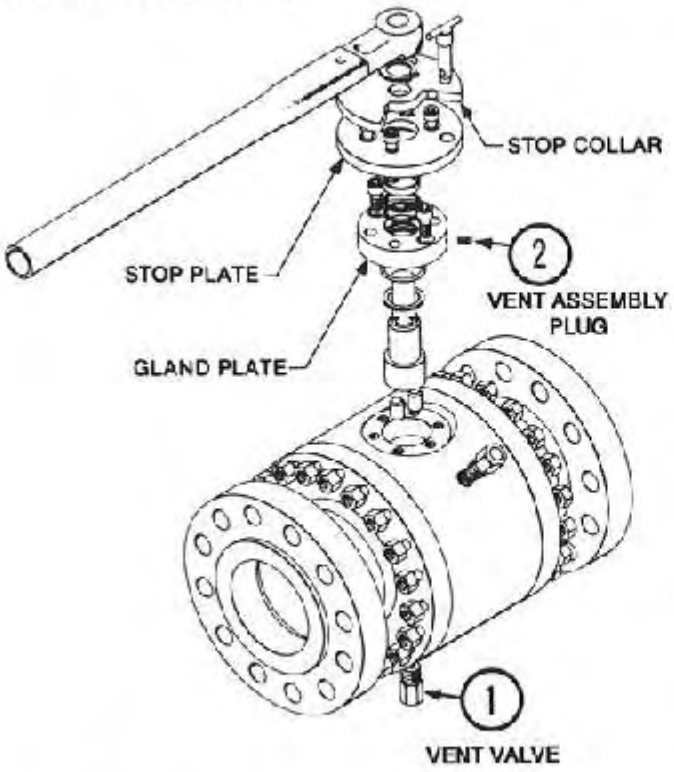

WRENCH OPERATED VALVE

1. Turn valve to fully closed position.
2. Bleed off body pressure - leaving vent valve (1) open.
3. Open 1/4" NPT vent assembly plug ② on the gland plate. CAUTION: EXERCISE EXTREME CARE WHEN REMOVING THIS PLUG AS IT IS POSSIBLE, EVEN WITH BODY PRESSURE RELIEVED, TO HAVE TRAPPED LINE PRESSURE BEHIND THIS VALVE.
4. Lift wrench off stem. Do not lose key.
5. Remove lock pin, and cap screws, and lift collar from the stem.
6. Remove cap screws and lift stop plate and key stop off stem.
7. Remove gland plate cap screws.
8. Lift stem unit with gland plate out of body. Do not remove the drive pins.
9. Slip gland plate off of stem. Remove gland bushing, O-Rings, and upper thrust washer(s).
10. Coat new O-Rings with a thin film of non-fibrous grease and install in gland plate.
11. Re-assemble gland plate, thrust washer(s), and stem assembly and insert into body. (See torque table, PART VI).
12. Close vent valve ①.
13. Replace 1/4" NPT vent assembly plug ②.
14. Crack valve to allow body to repressure to check integrity of the new seal.

GEAR OR MOTOR OPERATED VALVE

1. Follow steps 1 and 2 as outlined for wrench operated valve.
2. With valve in fully closed position mark vertical line on operator, adapter flange and body, to insure correct alignment of these parts at re-assembly.
3. Remove mounting nuts from adapter plate and lift operator off plate.
   NOTE: EXERCISE CAUTION WHEN REMOVING OPERATOR. IT IS KEYED TO STEM AND MUST BE LIFTED STRAIGHT UP UNTIL STEM IS CLEAR. BE CAREFUL NOT TO DAMAGE OR LOSE KEY.
4. Remove adapter plate (remove stop collar if required).
5. Follow steps 7 through 13 as outlined for wrench operated valve.
6. Replace adapter plate making certain vertical mark line on body and adapter are in alignment.
7. Replace nylon washer and stop collar if required.
8. Replace gear operator making certain vertical mark line on body, adapter plate and operator, are in alignment.
9. Replace key in stem.
10. Replace mounting nuts and tighten evenly all around.
11. Crack valve to allow body to repressure to check integrity of the new seal.

C. EMERGENCY SHUT-OFF

The seat seals of all Grove valves are designed not to require sealants; however, in the presence of excessive line contaminants, the possibility of leakage, due to erosion, is greater than when a valve is used for normal on-off service. If the metal-to-metal primary seal and the secondary "O" ring seal are damaged, an emergency shutoff may be obtained with a sealant injected into a specially designed groove in the seat ring assembly. This feature is especially important in critical underwater applications where it may be impractical to remove a valve from the line. Grove B-5 valves are equipped with fittings for emergency sealant injection. We ship without sealant fittings and drain valves for subsea service.

SEALANT INJECTION INSTRUCTIONS

First purge the sealant passages by injecting "SEALWELD" VALVE CLEANER (or equivalent). This operation purges old greases and residual build-up which contribute to seat leakage and excessive operating torque.

With valve in the fully closed position, slowly inject "SEALWELD 911" sealant (or equivalent) through the large buttonhead fitting provided on the upstream closure. If possible, move ball slightly during injection to insure that sealant is evenly distributed over the sealing surfaces of the seat ring and the ball. (For ball valves with damaged balls or seats use "SEALWELD" BALL VALVE SEALANT NO. 5050, or equivalent.)

For low temperature services down to –75 to +400 degrees Fahrenheit, use "SEALWELD" VALVE SEALANT D-1014 (or equivalent). A damaged sealant fitting may be removed and replaced while the valve is under pressure, by first injecting a small amount of sealant to insure the tightness of the single or double ball check valve installed in the sealant passage under the grease fitting.

D. IN-LINE HYDROSTATIC TESTING

1. With zero pressure in the line and in the valve, remove the relief valve and replace with a pipe plug.
2. Make sure that vent plug valve at bottom of valve is closed.
3. On valves 14" and larger, remove the body vent plug from the gland plate to permit evacuating all air from body cavity.

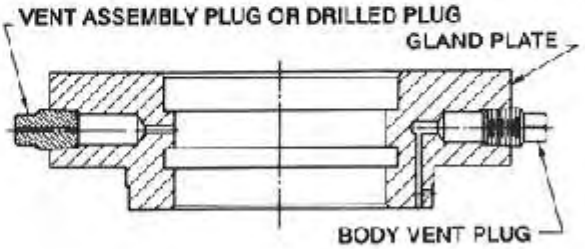

4. Open ball valve about 1/3 to permit pressurizing valve body.
5. Fill line and valve body until liquid flows from gland plate body vent port and pressures the relief port.
6. Replace gland plate vent plug and plug pressure relief port.

7. Raise pressure to desired hydrostatic test pressure. This pressure must not exceed 1-1/2 times the maximum operating pressure of the valve - unless prior approval to test at higher levels is obtained from Grove.
8. After test is completed:
   a. Close ball valve.
   b. Vent any remaining body pressure through bottom vent plug valve and close tightly.
   c. REINSTALL THE RELIEF VALVE
      This is very important for protection of the body against overpressure when the valve is in the closed position. CAUTION: DO NOT ALTER THE RELIEF VALVE SETTING.
9. When valve is in the closed position, test pressures must NOT exceed the maximum rated operating pressure of the valve.

PART IV - Off Stream Maintenance

Major repairs which necessitate removing the valve from the line.

EQUIPMENT

Handling equipment as required for weight involved, see current Grove Ball Valve catalog for weight of specific valve. Also required is a plywood sheet to press in large seat rings.

A. DISASSEMBLY PROCEDURE

1. Turn the valve to open position, and open vent valve to relieve line pressure before removing the valve from line.
2. Remove the wrench or gear per instructions in Part III.
3. Remove stem assembly per instructions in Part III.
4. Remove body nuts except four (4) on each flange.
5. Turn the valve on end with the weight spread evenly on one port face of the body, exercising care not to damage the sealing surfaces if the valve is flanged. Loosen body nuts on upper closure one full turn and lift on closure to loosen closure, o-rings, and body.



6. Remove remaining body nuts form upper closure and lift closure off body studs. Be careful not to damage body "O" Ring or bearing unit dowel pins. Loosen body nuts on lower closure one full turn and lift on body to loosen body, o-ring, and closure.
7. Remove remaining body nuts from lower closure and remove body. On large valves, body studs may be replaced by eye bolts for this operation.

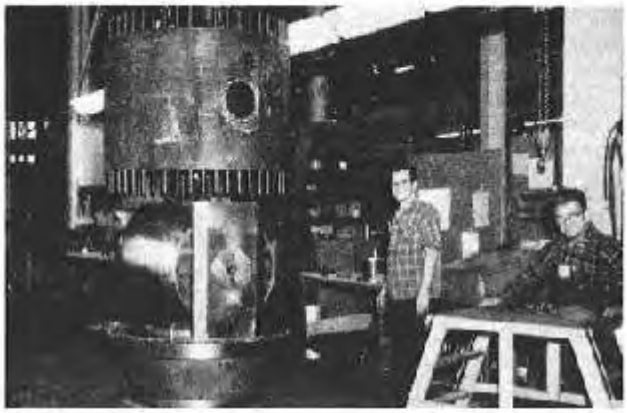

8. Remove vent valve and relief valve from body for cleaning.
9. Insert lifting eyebolts in threaded holes provided in bearing plates.
10. Using eyebolts and a spreader bar cut to length, lift the ball up out of seat ring.
    CAUTION: BALL CAN SLIDE OUT OF THE BEARING BLOCKS.

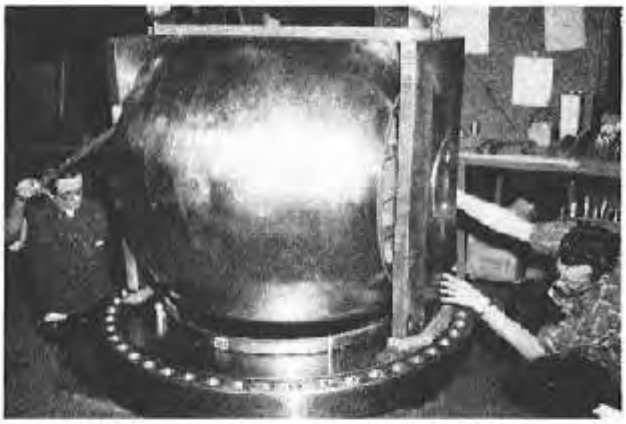

11. For re-assembly note position of the three or more drilled holes on O.D. of outer seat ring. Seat ring must be re-assembled with these holes at 90° to the vertical center line of the stem and ball.



12. Lower ball onto wood blocks with the plates clear, and remove the plates form the ball. Spacer and lower thrust washer are now free. Retainer pins are a press fit in bearing plates and should not be removed.



13. Remove from closures, 4 seat retainer cap screws and bushings (if valve is so equipped.) Carefully pry out the seat ring assembly from both closures, and remove seat ring springs from the closures. Remove buttonhead grease fittings and ball check valves from closures for inspection and cleaning.



14. Disassemble seat ring as follows:
    a. Remove seat gasket O-Ring and U-Cup (not shown).

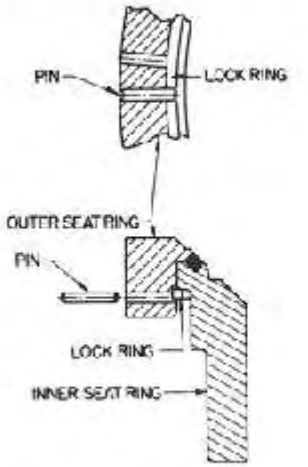

On small valves, the U-Cup remains in the closure when the seat assembly is removed.

    b. Remove lock pin by introducing screw driver between inner and outer seat rings and pry pin out-ward. Compress lockring inward by introducing a punch-thru hole adjacent to pin and progressively pry out lockring from it's groove.
    c. Separate inner ring from outer ring and remove Seal O-Ring.

B. INSPECTION AND CLEANING

1. Wipe off metal parts with soft cloth, using a petroleum solvent, detergent, or cleaner. Replace O-Rings and gasket.
2. Inspect metal parts for damage or burrs on all moving surfaces.
3. Replace defective parts with only genuine Grove manufactured and supplied parts.
   NOTE: O-Rings are made to stretch with a certain tension around a metal shoulder. Any stretching or swelling of O-Rings may cause cutting on re-assembly. Do not re-use O-Rings unless their dimensions are carefully checked against new parts.

C. LUBRICATION

1. DO NOT lubricate the dry bearing plates or the contact surfaces.
2. For temperatures from –50° to +225°F, lubricate all moving contact metal surfaces with a low temperature, high quality



grease. Lubricate O-Rings with heavy grease. (Marfak #3 or equal.)
3. For temperatures +10°F to +350°F, lubricate all moving contact metal surfaces and O-Rings with Bracote 622 wide temperature grease or equivalent.

D. REASSEMBLY

1. Place both closures on a clean, solid surface. If flanged, be careful not to damage sealing surface.
2. a. Install check valve and buttonhead grease fittings into sealant passages of closures.
   b. Lubricate threads with thread sealant.
   c. Fill sealant cavities, through the grease fittings, with a low temperature, high quality, grease until lubricant just appears in the seat ring recess. This process serves to lubricate the check valves, assuring pressure tightness.
3. Reassemble seat rings:
   NOTE: A press will make the assembly of the inner and outer seat rings easier. Contact Grove for more information.
   a. Place Seal-O-Ring in inner seat ring and place outer seat ring over inner ring, set the loose seat rings in the press then press together.
   b. Secure with lock ring and pin as follows: Push lock pin inward thru hole in outer set ring until it protrudes slightly

into lock ring groove. Start lock ring into it's groove by abutting the pin and working it into it's groove progressively around the seat circumference. Push lock pin fully thru gap between ends of nested lock ring. Remove from press (refer to illustration, Part IV-A, Step 14).

c. Grease seat gasket O-Ring. Stretch seat gasket O-Ring over shoulder of inner seat ring.
d. Replace U-Cup. Do not stretch. U-Cup is designed to fit with minimum contact. Stretching will make it too large.

4. Insert springs in closure and position seat ring in closure so that the three or more drilled holes on the O.D. of outer seat ring are at 90° to the vertical centerline of the stem and ball.



5. Seat ring assembly must be pressed into the closure recess. On large valves, this may be done by using ball as a press, as follows:
   NOTE: If your valve has the 4 seat retainers in each seat, these should be used to pull seat into closures which would eliminate steps a, b & c.
   a. Lay plywood sheet over the entire exposed surface of seat rings.
   b. Place slings around the ball, and suspend the ball over seat rings.
   c. Lower ball onto wood and carefully press seat rings into closure.
      CAUTION: Be sure pressure is applied evenly. Seat rings must be properly aligned or ball will bind and valve will leak.

6. Remove slings from ball and block up, so end trunnions are accessible with clearance for bearing plates.
   a. On lower trunnion place lower thrust washer and spacer, if used. The chamber on the inner diameter of the spacer must face the thrust washer.
   b. Locate the bearing plates on the ball trunnions with lifting eye bolts installed.



7. Using eye bolts in bearing plates with a spreader bar lift ball into position over seat assembly in closure.
8. Lower ball into seat rings while rotating bearing plates so that pins fit into matching holes in closure. Remove lifting eye bolts.

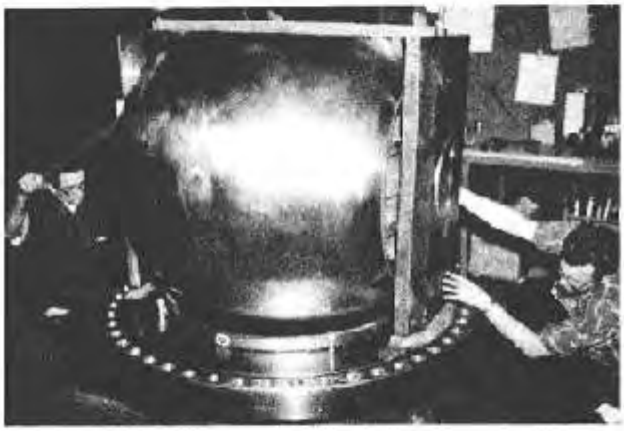

9. Apply grease to the closure O-Ring and body O-Ring groove. Place body O-Ring over shoulder on closure.
10. Lift body over ball and set into position with studs matching closure holes and ball.

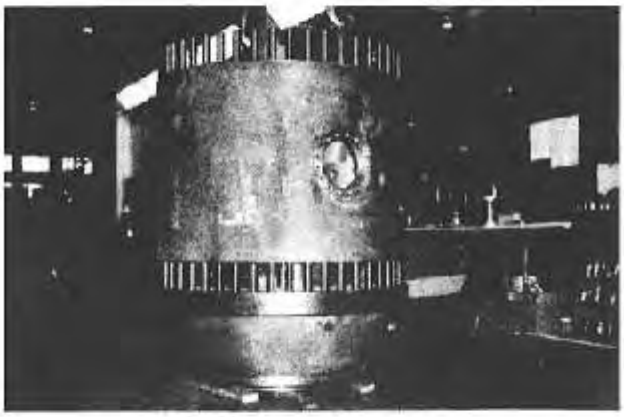

11. Lower other closure over body studs with the bearing plate pins seating into the matching closure holes.
    CAUTION: Be sure to lower closure evenly.



12. Replace 4 evenly spaced body nuts on each closure. Tighten these nuts, replace all body nuts. Tighten all body nuts.
13. Turn valve assembly upright.



14. The stem and gland plate are installed in the valve as a unit.
    a. Install the lower and upper stem O-Rings with assembly grease.
    b. Install the gland bushing.

    Securely block the stem vertically. If available, set in a press.

    Lubricate the stem O-Ring area.



    Set the thrust washer on the stem shoulder.
    Set the gland plate on the stem.
    Orient the gland plate to the key slot witness mark.
    Set the adapter plate on the gland plate.
    Firmly press the adaptor plate until the gland plate and thrust washer make contact with the stem shoulder.
    Set the adapter plate off to one side.
15. Install the gland plate O-Ring with grease.
    Inspect the gland plate O-Ring groove in the body.
    Grease the O-Ring groove.
16. Insert the stem/gland plate unit into the body.
    Align the stem pins and key. If the ball is closed, the keyway should be over the name plate.
    If the ball is open, the keyway should face the right side of the valve.
    Secure the gland plate cap screws. (Refer to torque table, Part VI, Page 10.)



17. Install vent plug assembly
18. Finish tightening body nuts with wrench evenly all around. (Refer to torque table. Part VI, Page 10.)
19. Replace gland plate gasket.



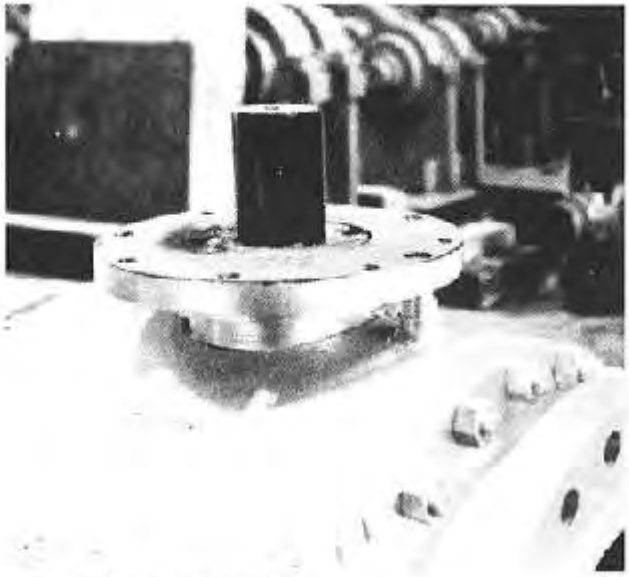

19. Replace gland plate gasket.
20. If valve has gear operator:
    a.1. Replace adapter plate with stop collar over gland plate with anchor pin engaged. Secure with cap screws. (See torque table, Part VI.) Replace stop collar cap screws.
    a.2. Replace adapter plate with keystop over gland plate with anchor pin engaged. Secure with cap screws. (See torque table, Part VI.)



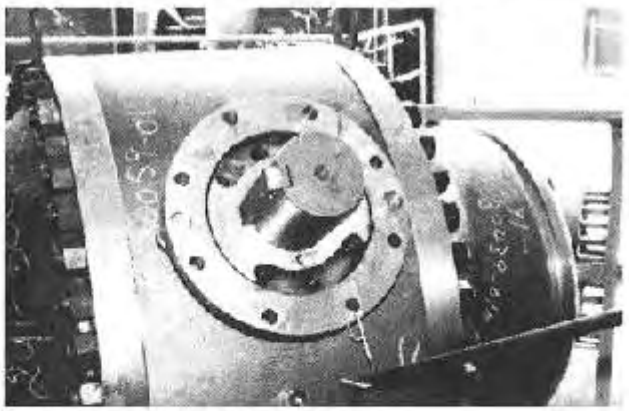

    b. Replace washer and stop collar.
    c. Replace key in valve stem, engaging keyway in stop collar.
    d. Replace operator (observing the reference marks on operator, adapter flange and body) and secure to adapter plate with cap screws. (See Part VI for torque.)
    e. Refer to operator mounting instructions for adjustment of stops. (See Part V.)
21. If valve is wrench operated:
    a. Replace stop plate and secure to gland plate with cap screws. (See torque table, Part VI.)
    b. Replace washer and stop collar over stop plate. Rotate so the lock pin holes line up and replace lock pins and stop collar cap screw.
    c. Replace wrench if stem has square end. Otherwise, replace key in stem, engaging keyway in stop collar. Replace wrench.

E. TESTING FOR LEAKAGE

1. Install pipe plug in drain valve port at bottom of valve.
2. Close valve fully. Install body vent plug (if required).
3. Admit 50-100 psi air or nitrogen pressure into body cavity through relief valve port. Lock off body pressure.
4. If body pressure falls steadily, apply soap solution to ball/seat circumference closure, flange to body interface and to vented assembly plug in gland plate. Release pressure, disassemble and repair area of leakage.
5. Vent air pressure from body and install relief valve.
6. Remove pipe plug from drain port and install drain valve assembly, close drain valve.

PART V - Accessory Installation

A. GROVE SY Scotch Yoke Operator Mounting - and setting stops

1. Before mounting the operator on the valve, grease the valve stem. Check the key to see that it is the proper length and fits the key slot without excessive play. Lower the operator over the stem and bolt down to the valve adaptor plate. Tighten bolts securely.
   NOTE: If operator fits tight over the valve stem, do not force down by taking up on the bolts. This will lock-up the ball and cause excessive torque. Check for scratches or burrs and polish to provide smooth sliding surfaces.
2. The valve internal stop is designed to serve as an indicator of the ball open and closed positions. This stop permits slightly more than 90° travel in order that the stops in the operator can be set to serve as the ACTUAL stopping means. After the operator has been properly installed on the valve, the operator stops can be set as follows:

> NOTE: ON NEWER VERSIONS OF THE B-5 BALL VALVE, THE ADAPTOR PLATE AND STOP COLLAR ARE ONE PIECE. (SEE FIG. A & B, PAGE 2.)

Off-stream (Valve removed from line)

a. Back-off locknuts and stop screws on both sides of the operator.
b. Turn handwheel clockwise until ball is about 1/2 closed.
c. From the table, find the arc length for the size and pressure class of the valve, and measure off this distance from ball bore lip along horizontal cneter line. Make a pencil mark on the ball at this point. (Refer to sketch.)
d. Continue to turn valve towards the closed position until the pencil mark is flush with the I.D. of the seat ring.
e. Turn the operator "close" stop screw (farthest from the handwheel) until it can go no further. Tighten the locknut.
f. Turn operator handwheel counter-clockwise until bore of the ball lines up visually with bore of seat ring.

g. Advance "open" operator stop screw nearest the handwheel until it can go no further and tighten the locknut.

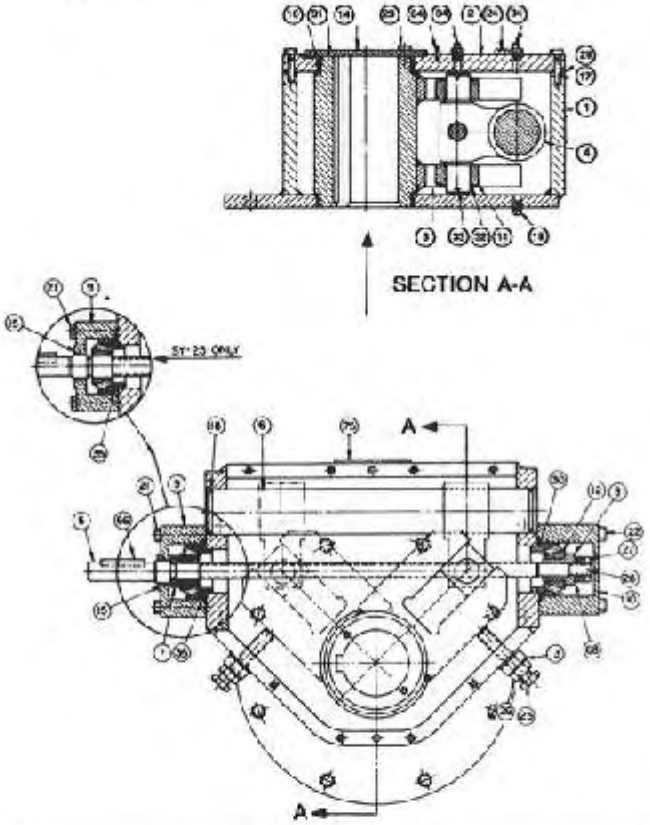

SIZE	CLASS 150/600 MEASURED ARC LENGTH (Inches)	CLASS 900 MEASURED ARC LENGTH (Inches)	CLASS 1500 MEASURED ARC LENGTH (Inches)
6"	1 3/64 ± 1/16	1 3/64 ± 1/16	1 7/64 ± 1/16
8"	1 ± 1/16	1 ± 1/16	1 33/64 ± 1/16
10"	1 1/64 ± 1/16	1 1/64 ± 1/16	1 7/64 ± 1/16
12"	1 3/64 ± 1/16	1 3/64 ± 1/16	1 51/64 ± 1/16
14"	1 29/64 ± 1/8	1 1/8 ± 1/8	2 3/64 ± 1/8
16"	1 1/4 ± 1/8	2 1/32 ± 1/8	2 1/64 ± 1/8
18"	1 5/32 ± 1/8	2 3/32 ± 1/8	
20"	1 7/32 ± 1/8	2 7/32 ± 1/8	
22"	1 13/32 ± 1/8	2 1/4 ± 1/8	
24"	2 5/32 ± 1/4	3 1/32 ± 1/4	
26"	2 3/32 ± 1/4	2 29/32 ± 1/4	
28"	2 5/32 ± 1/4	3 1/32 ± 1/4	
30"	2 1/4 ± 1/8	3 7/32 ± 1/4	
32"			
34"	2 11/32 ± 1/4	3 15/32 ± 1/4	
36"	2 15/32 ± 1/4	3 1/2 ± 1/4	
38"			
40"	2 13/16 ± 1/4		
42"	2 15/16 ± 1/4		
44"			
46"			
48"	4 3/32 ± 1/16		

Section on Horizontal Plane Thru Valve Bore Centerline

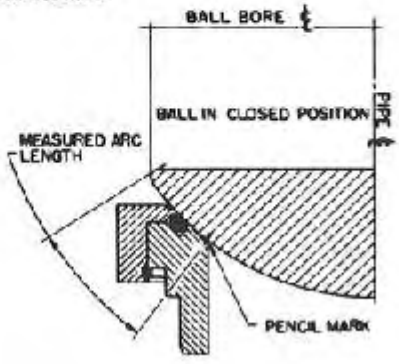

NO.	PART NAME	NO.	PART NAME
1.	Housing	21.	Capscrew (Bearing Cover)
2.	Cover	22.	Capscrew (Bearing Cover)
3.	Drive Sleeve & Yoke	23.	Capscrew (Indicator Cover)
4.	Trunnion	24.	Capscrew (Cover)
5.	Stem	25.	Stop Screw
6.	Guide Bar	26.	Lock Nut
7.	Bearing Bushing (Left)	27.	Slotted Nut (Stem)
8.	Bearing Bushing (Right)	28.	Cotter Pin
9.	Bearing Cover (Left)	29.	Gasket (Cover)
10.	Bearing Cover (Right)	30.	O-Ring (Bearing Cover)
11.	Torque Arm Shoe	31.	Gasket (Indicator Cover)
12.	Bearing (Stem)	32.	Washer
13.	Seal Washer	33.	Cotter Pin
14.	Indicator Cover	34.	Grease Fitting
15.	O-Ring (Stem)	35.	Bearing Spacer
16.	O-Ring (Drive Sleeve)	64.	Groove Pin
17.	Roll Pin	66.	Key
18.	O-Ring (Guide Bar)	68.	Spacer (SY-25 Only)
19.	1/4" Pipe Plug	75.	Emblem

On-Stream (Valve in pipeline and under pressure)

a. Back-off locknuts and screws on both sides of the operator.
b. Turn handwheel in a clockwise direction as far as it will go. This places valve in maximum closed position as permitted by the stop collar of the valve.
c. Vent body cavity pressure thru special vent valve. If CONTINUOUS drainage occurs, slowly turn handwheel counter-clockwise until drainage just stops.
d. From this handwheel position, count the number of handwheel turns in counter-clockwise direction required to initiate flow from vent port. Do not overshoot.
e. Turn handwheel clockwise one half the counted number of turns determined in "d" above.
f. Turn the operator stop screw (farthest from the handwheel) until it will go no further. Tighten the locknut.
g. Tighten the vent plug assembly. Close vent valve.
h. From the handwheel position in step "f", turn the handwheel counter-clockwise the number of turns for 90° rotation indicated in the table for the operator involved.

OPERATOR	TURNS FOR 90°
SY-25	40
SY-50	40
SY-150	56
SY-300	72
SY-500	60

j. Advance the operator stop screw (nearest the handwheel) until it will go no further. Tighten the locknut.

NOTE:

1. For valves isolated from line pressure, the above stop setting procedure may be accomplished by using 50-100 psi air or nitrogen pressure introduced into body cavity of closed valve.
2. For setting stops on other gear or power operators, refer to the manufacturer's instruction.

B. OPERATOR EXTENSION - FIELD MOUNTING

Move ball slightly off of the open or close position. Remove key from stem. Remove primary gear and clean adapter plate surfaces. Install gasket on adapter flange. Insert eye bolt in drive tube and install over stem, being careful not to damage key. Install extended yoke onto adapter flange, bolting up tight to torque specifications in Part VI. Install gasket on extended yoke mounting flange. Install "alignment lugs" on adapter plate and extended drive yoke. Mount primary gear on extended yoke.

Refer to above section on mounting primary gear operator for instructions on setting stops.

NOTE: After field mounting extension on Grove Standard ball valve, primary gear operator stops will have to be reset.

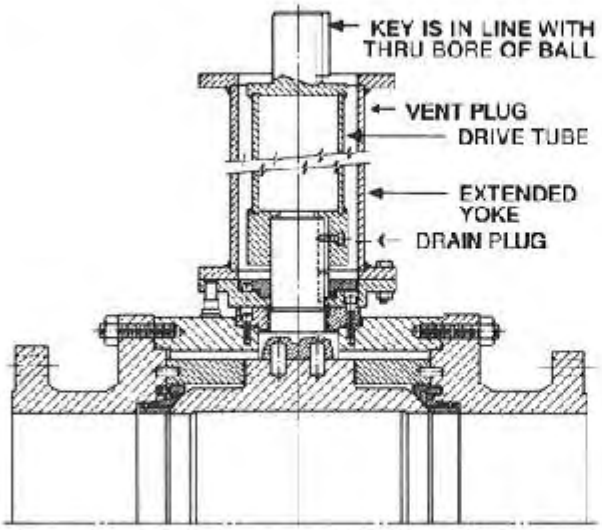

EXTENDED BLOW-DOWN AND EXTENDED SEALANT INJECTION LINES

Recommendation for extending vent and seat sealant, injection lines on valves having extended operators. **1/2"** Sched. 80 piping is suggested for all lines.

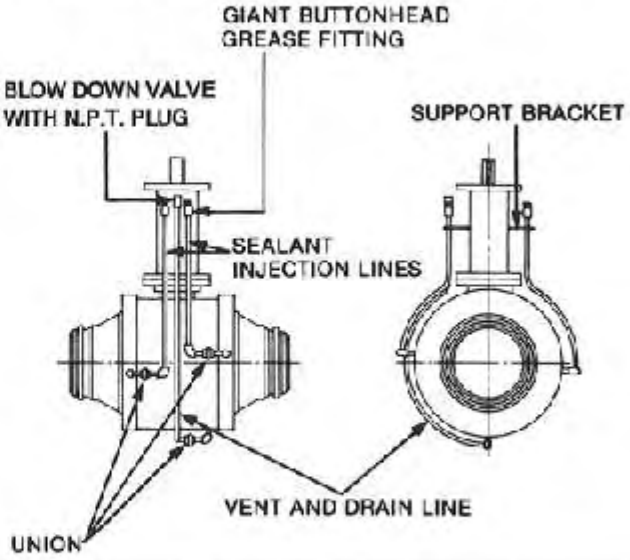

PART VI. - Miscellaneous - A. Bolting Torques

Body Stud Torque (B-5)

STUD SIZE	Torque* (ft.-lb.) Lubed (Moly)
1/2 - 13 UNC	55
5/8 - 11 UNC	105
3/4 - 10 UNC	180
7/8 - 9 UNC	300
1" - 8 UNC	440
1 1/8" - 8 N	640
1 1/4" - 8 N	920
1 3/8" - 8 N	1240
1 1/2" - 8 N	1640
1 5/8" - 8 N	2120
1 3/4" - 8 N	2675
1 7/8" - 8 N	3325
2" - 8 N	4070
2 1/4" - 8 N	5815
2 1/2" - 8 N	8000

Capscrew Torque (B-5)

CAPSCREW SIZE	MINIMUM TORQUE
1/2" - 13	50 ft. - lbs.
5/8" - 11	100 ft. - lbs.
3/4" - 10	170 ft. - lbs.
7/8" - 9	250 ft. - lbs.
1" - 8	350 ft. - lbs.

NOTE: ON NEWER VERSIONS OF THE B-5 BALL VALVE, THE ADAPTOR PLATE AND STOP COLLAR ARE ONE PIECE.

PART NAME	
1. Body	17. Gland Plate
2. Closure-Flanged End	18. Stop Collar
3. Closure-Weld End	19. Gland Bushing
4. Ball	20. Thrust Washers
5. Inner Seat Ring	21. Adapter Plate
6. Outer Seat Ring	22. Washer
7. O-Ring (Seat Seal)	23. Key (Stem)
8. O-Ring (Gland Plate)	24. Relief Valve Assembly
9. O-Ring (Stem)	25. Vent Plug or Drain Valve
10. O-Ring (Body)	26. Capscrew (Adapter Plate)
11. O-Ring (Seat Gasket)	27. Capscrew (Gland Plate)
12. Bearing Retainers	28. Stud
13. Dowel Pins (Retainer)	29. Nut
14. Bearings	30. Seat Springs
15. Stem	31. U-Cup Ring
16. Drive Pins	32. Check Valve & Grease Fitting

Exploded Isometric
Pre 1991

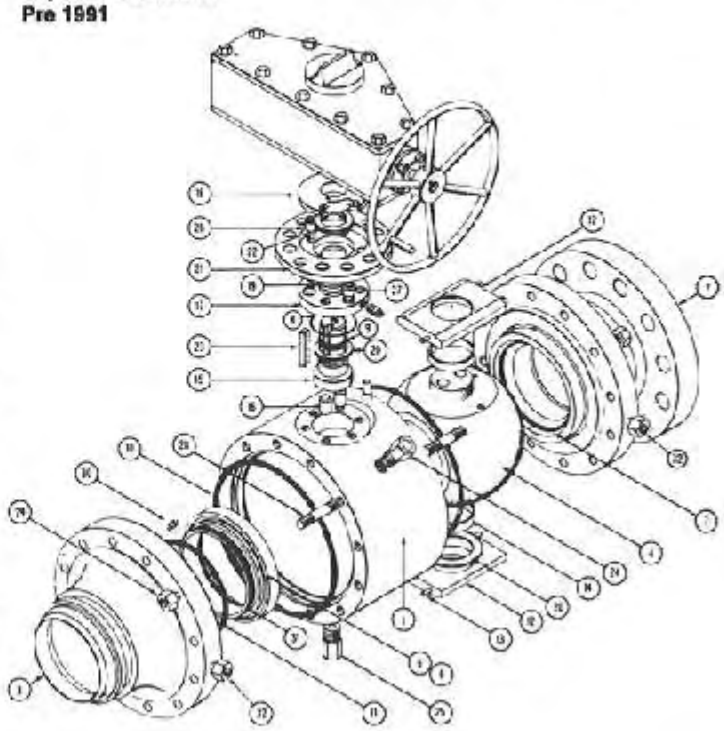

B. TOP MOUNTING DIMENSIONS FOR GROVE B-5 BALL VALVES LESS GEAR OPERATORS

NOTE: TO OPERATOR MANUFACTURERS.

1. Key is in line with bore of ball.
2. Operator must be arranged for 91° rotation including adjustable 1/2° rotation at each end of travel. Adjustment to be external type.
3. All operators and mounting adaption to be fully enclosed and weather proof.
4. For top mounting clearance dimensions for mounting cylinder operator or top mounting dimensions for class 1500 B-5's, contact Grove direct.
5. For top mounting dimensions for operators on extensions contact Grove direct.

CAUTION: MINIMUM OPERATOR STEM ENGAGEMENT (E-1") Dim. must be fully engaged by operator drive sleeve.

VALVE SIZE	CLASS	A	B	C	D	E	F +.000 −.004	G +.000 −.010	H +.000 −.002
6"	150/600	9-3/4	8-1/4	13/16	7/8	3-9/16	1.750	1.917	.375
6"	900	11-1/2	10-1/4	11/16	1-5/16	3-3/4	2.374	2.646	.625
8"	150/900	11-1/2	10-1/4	11/16	1-5/16	3-3/4	2.374	2.646	.625
10"	150/900	11-1/2	10-1/4	11/16	1-5/16	3-3/4	2.374	2.646	.625
12"	150/600	11-1/2	10-1/4	11/16	1-5/16	3-3/4	2.374	2.646	.625
12"	900	15-5/8	14	13/16	1-5/16	4-1/2	2.874	3.200	.750
14"	150/300	11-1/2	10-1/4	11/16	1-5/16	3-3/4	2.374	2.646	.625
14"	400/900	15-5/8	14	13/16	1-5/16	5-1/2	3.499	3.882	.875
16"	150	11-1/2	10-1/4	11/16	1-5/16	3-3/4	2.374	2.646	.625
16"	300/900	15-5/8	14	13/16	1-5/16	5-1/2	3.499	3.882	.875
18"	150/900	15-5/8	14	13/16	1-9/16	5-1/2	3.499	3.882	.875
20"	150/600	15-5/8	14	13/16	1-9/16	5-1/2	3.499	3.882	.875
20"	900	15-5/8	14	13/16	1-9/16	6	4.748	5.292	1.250
22"	150	15-5/8	14	13/16	1-9/16	5-1/2	3.499	3.882	.875
22"	300/600	15-5/8	14	13/16	1-9/16	6	4.748	5.292	1.250
22"	900	18	16	1-1/16	1-9/16	6	4.748	5.292	1.250
24"	150/600	15-5/8	14	13/16	1-9/16	6	4.748	5.292	1.250
24"	900	18	16	1-1/16	1-3/16	6	4.748	5.292	1.250
26"	150/400	15-5/8	14	13/16	1-7/8	6	4.748	5.292	1.250
26"	600	18	16	1-1/16	1-9/16	6	4.748	5.292	1.250
26"	900	18	16	1-1/16	1-3/4	6	4.748	5.292	1.250
28"	150	15-5/8	14	13/16	2-1/16	6	4.748	5.292	1.250
28"	300/600	18	16	1-1/16	1-13/16	7	5.998	6.655	1.500
28"	900	18	16	1-1/16	1-13/16	7	5.998	6.655	1.500
30"	150	15-5/8	14	13/16	2-1/16	6	4.748	5.292	1.250
30"	300/600	18	16	1-1/16	1-13/16	7	5.998	6.655	1.500
30"	900	22	20	1-1/16	2-1/16	7-1/2	6.498	7.162	1.500
32"	150	15-5/8	14	13/16	2-1/16	6	4.748	5.292	1.250
32"	300/600	18	16	1-1/16	1-13/16	7	5.998	6.655	1.500
32"	900	22	20	1-1/16	2-1/16	7-1/2	6.498	7.162	1.500
34"	150/600	18	16	1-1/16	2-3/16	7	5.998	6.655	1.500
36"	150/600	18	16	1-1/16	2-3/16	7	5.998	6.655	1.500
36"	900	22	20	1-1/16	2-3/16	7-1/2	6.498	7.162	1.500
40"	150/400	18	16	1-1/16	2-3/16	7	5.998	6.655	1.500
40"	600	22	20	1-1/16	2-1/16	7-1/2	6.498	7.162	1.500
42"	150/300	18	16	1-1/16	2-3/16	7	5.998	6.655	1.500
42"	400/600	22	20	1-1/16	2-1/16	7-1/2	6.498	7.162	1.500
42"	900	25	22	1-1/16	3-1/4	8	7.496	8.364	2.000

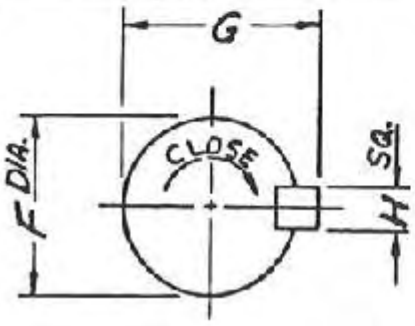

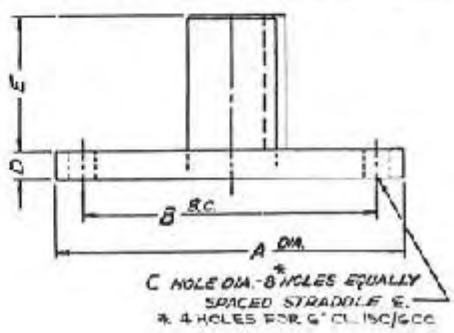

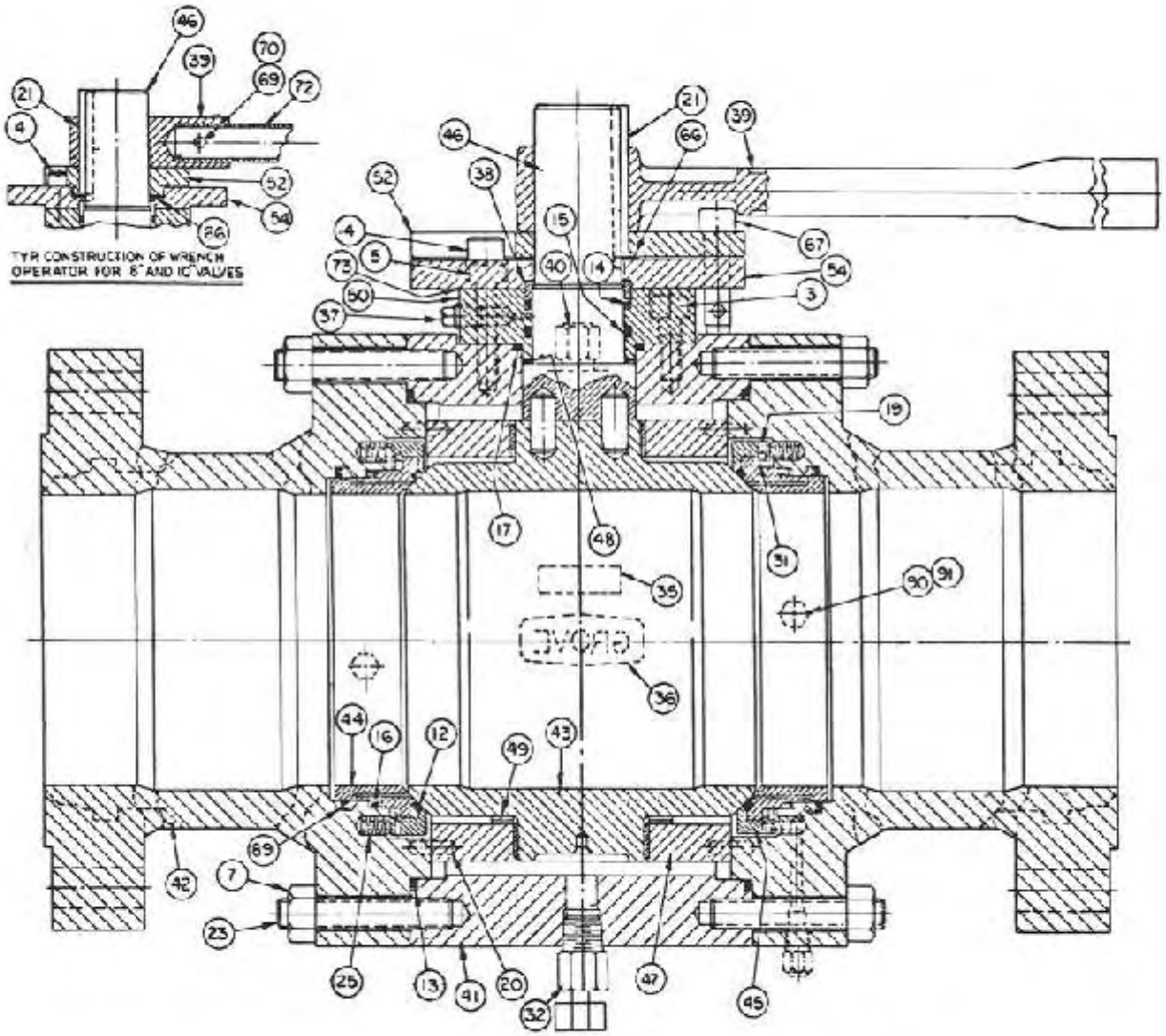

	ITEM	PART NAME	MATERIAL
	3	CAPSCREW (GLAND PLATE)	STEEL
	4	CAPSCREW (STOP COLLAR)	STEEL
	5	CAPSCREW (STOP PLATE)	STEEL
	7	NUT (BODY)	STEEL
A ‡	12	SEAL O-RING	GROVEX®
A ‡	13	O-RING (BODY)	GROVEX
A ‡	14	O-RING (UPPER STEM SEAL)	GROVEX
A ‡	15	O-RING (LOWER STEM SEAL)	GROVEX
A ‡	16	O-RING (SEAT GASKET)	GROVEX
A ‡	17	O-RING (GLAND PLATE)	GROVEX
B ‡	19	PIN (SEAT RING)	18/8 C.R.E.S.
	20	PIN (BEARING RETAINER)	STEEL
	21	KEY (STEM)	STEEL
	23	STUD (BODY)	STEEL
A ‡	25	SPRING (SEAT)	18/8 C.R.E.S OR INCONEL
B ‡	31	SEAT LOCK RING	18/8 C.R.E.S
	32	DRAIN VALVE	STEEL
	35	NAME PLATE	18/8 C.R.E.S.
	36	EMBLEM	A.B.S. PLASTIC
	37	VENTED ASSY. PLUG	STEEL
	38	GLAND BUSHING	STEEL
	39	WRENCH	DUCTILE IRON & STEEL
	40	RELIEF VALVE	STEEL
	41	BODY	STEEL
	42	CLOSURE	STEEL
C ‡	43	BALL	DUCTILE IRON - ELECTROLESS NICKEL
B ‡	44	INNER SEAT RING	STEEL - ELECTROLESS NICKEL COATED
B ‡	45	OUTER SEAT RING	STEEL - ELECTROLESS NICKEL COATED
	46	STEM UNIT	STEEL - ELECTROLESS NICKEL COATED
C/B ‡	47	BEARING UNIT	STEEL & TEFLON**
B ‡	48	UPPER THRUST WASHER	STEEL & RYTHON #
B ‡	49	LOWER THRUST WASHER	STEEL & RYTHON #
	50	GLAND PLATE	STEEL
	52	STOP COLLAR	STEEL
	54	STOP PLATE	STEEL
	66	WASHER	NYLON
	67	LOCK PIN	STEEL
	69	CAPSCREW (WRENCH)	STEEL
	70	NUT (WRENCH)	STEEL
	72	WRENCH HANDLE	STEEL
A ‡	73	GASKET (GLAND PLATE)	FIBER
A ‡	89	U-CUP (PACKING)	GROVEX
	90	CHECK VALVE	STEEL
	91	GREASE FITTING	STEEL

* USED ON 6" CLASS 150 THRU 600 ONLY

‡ RECOMMENDED FOR SPARE PARTS (SPARE PARTS, KITS, A, B, & C)

® A GROVE TRADENAME COVERING A VARIETY OF ELASTOMERIC MATERIALS

** TRADEMARK OF E.I. DUPONT CO.

TRADEMARK OF PHILLIPS 66 CO.

SYM	DATE	CHANGE	BY
SUPERSEDED BY		DATED	
SUPERSEDES		DATED	

APPR'D. APPR'D. CHK'D.

GROVE VALVE & REGULATOR CO.

6529 HOLLIS STREET — OAKLAND - CALIF.

DWN. BY: E.H.	DATE	CHK'D	APPR'D	DRAWING NO.

MODEL	DESCRIPTION	TITLE
B-5	TYPICAL CONSTRUCTION 6" CL. 150/600 8" CL. 150/300 & 10" CL. 150 WRENCH OPERATED	GROVE STEEL BALL VALVE

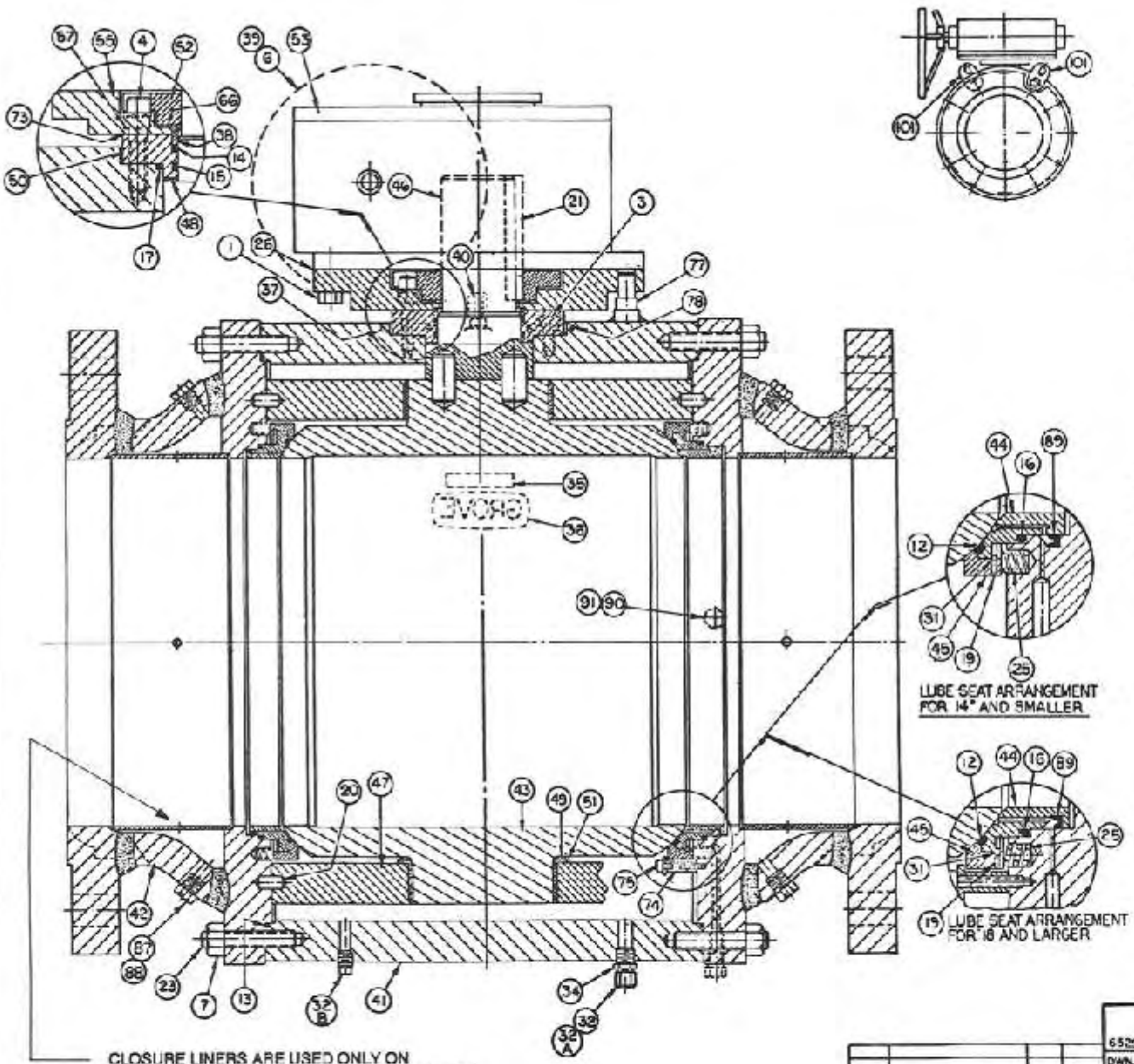

	ITEM	PART NAME	MATERIAL
	1	CAPSCREW (OPERATOR MOUNT)	STEEL
	3	CAPSCREW (GLAND PLATE)	ALLOY STEEL
	4	CAPSCREW (STOP)	ALLOY STEEL
	6	SET SCREW (HANDWHEEL)	STEEL
	7	NUT (BODY)	STEEL
A ‡	12	SEAL O-RING	GROVEX®
A ‡	13	O-RING (BODY)	GROVEX
A ‡	14	O-RING (UPPER STEM SEAL)	GROVEX
A ‡	15	O-RING (LOWER STEM SEAL)	GROVEX
A ‡	16	O-RING (SEAT GASKET)	GROVEX
A ‡	17	O-RING (GLAND PLATE)	GROVEX
B ‡	19	PIN (SEAT RING)	C.R.E.S.
	20	PIN (BEARING RETAINER)	STEEL
	21	KEY (STEM)	STEEL
	23	STUD (BODY)	STEEL
A ‡	25	SPRING	18/8 C.R.E.S.
A ‡	26	GASKET (OPERATOR MOUNT)	FIBER
B ‡	31	SEAT LOCK RING	18/8 C.R.E.S.
	32	DRAIN VALVE	STEEL
	32A	PIPE PLUG	STEEL
	32B	PIPE PLUG (BODY)	STEEL
	35	NAME PLATE	18/8 C.R.E.S.
	36	GROVE EMBLEM	A.B.S. PLASTIC
	37	VENTED ASSY. PLUG	STEEL
	38	GLAND BUSHING	STEEL
	39	HANDWHEEL	STEEL
	40	RELIEF VALVE	STEEL
	41	BODY	STEEL
	42	CLOSURE	STEEL
C †	43	BALL	DUCTILE IRON OR STEEL*
B ‡	44	INNER SEAT RING	STEEL*
B ‡	45	OUTER SEAT RING	STEEL*
	46	STEM (ON)	STEEL*
C ‡	47	BEARING UNIT/BEARING	STEEL & TEFLON**
A ‡	48	UPPER THRUST WASHER	STEEL & NYTHON #
A ‡	49	LOWER THRUST WASHER	STEEL & NYTHON #
	50	GLAND PLATE	STEEL
	51	SPACER (LOWER THRUST WASHER)	STEEL
	52	STOP COLLAR	STEEL
	53	OPERATOR	STEEL & IRON
	55	ADAPTER PLATE	STEEL
	57	CAPSCREW	ALLOY STEEL
	66	WASHER	NYLON
A ‡	73	GASKET (GLAND PLATE)	FIBER
	74	PULLER BUSHING (SEAT RING)	STEEL
	75	CAPSCREW (PULLER BUSHING)	ALLOY STEEL
	77	ANCHOR PIN	STEEL
	78	VENT PLUG (GLAND PLATE)	STEEL
	87	O-RING (SEAL PLUG)	GROVEX
	88	SEAL PLUG	STEEL
A ‡	89	U-CUP PACKING	GROVEX
	90	CHECK VALVE	STEEL
	91	GREASE FITTING	STEEL
	101	LIFTING LUG	STEEL

* ELECTROLESS NICKEL COATED
‡ RECOMMENDED FOR SPARE PARTS (SPARE PARTS, KITS, A, B, & C)
® A GROVE TRADENAME COVERING A VARIETY OF ELASTOMERIC MATERIALS
** TRADEMARK OF E.I. DUPONT CO.
# TRADEMARK OF PHILLIPS 66 CO.

DATE	CHANGE	CHK	APP'D
SUPERSEDES		DATED	
SUPERSEDED BY		DATED	

GROVE VALVE & REGULATOR CO.
6529 HOLLIS STREET — OAKLAND • CALIF.

DWN. BY	DATE	CHK'D	APP'D	DWG. NO.

MODEL	DESCRIPTION	TITLE
B-5	FLANGED & WELD END CLASS 150 THRU 900 GEAR OPERATED	TYP. CONSTRUCTION BALL VALVE

Section B (Series B-4B & B-4C Ball Valves)

PART VII - General Information

DESIGN

B-4B & B-4C ball valves are non-directional and can be installed with either end upstream. Flanged end valves have flanges faced and drilled in accordance with ANSI B16.5. Certain sizes in class 150 and 300 are supplied with line flanges drilled and tapped to accept studs in sizes conforming the ANSI standards. Studded flanges are permitted by API Spec. 6D when required by the body design.

Since the B-4B line was introduced, there have been some design changes which alter maintenance instructions.

A. Early gear operated valves featured a combined adapter plate/bearing housing. Later valves have separate adapter plates and bearing housings to facilitate field conversion from wrench to gear operation. If this conversion is being made, determine whether there are spacers under the heads of the bearing housing capscrews. If there are, remove the capscrews and spacers, replace the spacers with an adapter plate and re-install the capscrews. If spacers are not found, it is necessary to replace the bearing housing with the current design before installing the adapter plate.

B. A weather seal O-Ring has been added between the bearing housing and stop collar to prevent moisture from seeping past the upper stem bearing. This O-Ring can only be used in current style bearing housings which have a counter-bore above the bearing. The weather seal will **not** function as a stem seal should both stem O-Rings fail.

C. Current 2" - 4" Class 600 - 1500 (B-4C) valves have a two-piece O-Ring seat similar to the B-5, except that no emergency sealant feature is available and, therefore, no U-Cup is used. If a valve has this seat design, it will have a B-5 type relief valve in the upper body. This seat is **not** interchangeable with the single-piece nylon seat; new closures and a body modified for the relief valve are required.

D. The GV-2 operator, used on 4" valves, has a drive sleeve which fits directly over the valve stem without requiring a stem adapter sleeve and key. Valves with 5M or 8M operators use stem adapters.

FIELD WELDABILITY - WELDING END VALVES

The B-4B design, with welding end connections utilize ASTM A-216 Gr. WCB or WCC steel castings or A105 or A350 Gr. LF2 forgings which are readily field weldable. When welding Grove valves in the line, standard field welding techniques and procedures are satisfactory.

BODY RELIEF

The B-4B design, with the nylon seat, affords internal self relief of excess body pressure as might be caused by thermal expansion of liquids entrapped in valve body. A body relief valve is not required. The O-Ring seat B-4C design is not self relieving. A body relief valve is used on these valves.

BLOCK AND BLEED

Grove B-4B ball valves are equipped with a special 1/4" NPT vent plug installed in the trunnion in the lower body area. A socket head needle valve located in the vent plug permits venting and draining of the body cavity with the valve in the closed position under pressure: confirming block and bleed capability.

PART VIII - Valve Installation

A. EQUIPMENT

1. Handling equipment as required for the weight involved. The current Grove Ball Valve catalog furnishes the weight of the specific valve.
2. Standard hand tools.

B. PROCEDURE

1. Inspect valve bore for foreign matter and clean, if necessary.
2. Install in line; either end may be installed upstream.

PART IX - On Stream Maintenance

This part covers maintenance and repair that can be performed without removing the valve from the line.

A. BLOCK AND BLEED

With the line under pressure the valve body cavity can be vented to atmosphere and completely drained down with the ball in the closed position by opening the bleeder valve in the special vent plug.

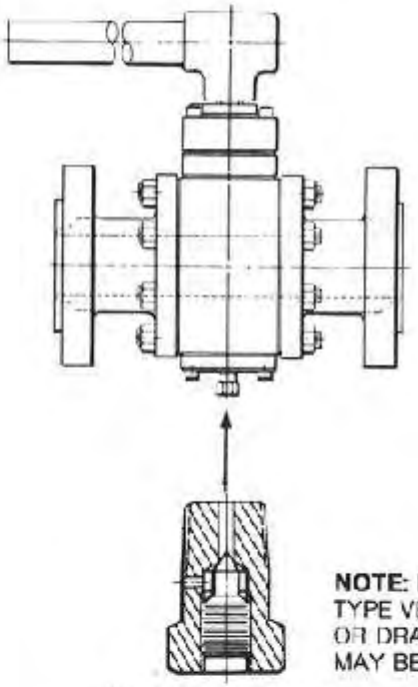

NOTE: DIFFERENT TYPE VENT PLUG OR DRAIN VALVE MAY BE SUPPLIED.

VENT ASSEMBLY PLUG

B. STEM SEAL O-RING REPLACEMENT

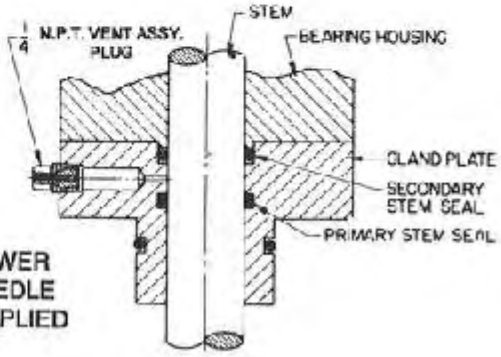

NOTE: ON NEWER VALVES A NEEDLE VALVE IS SUPPLIED IN LIEU OF A VENTED PLUG.

The B-4B & B-4C have two stem seals, one primary seal, backed up by a secondary independent seal.
If the primary O-Ring seal becomes faulty, a leak will occur through the gland plate vent plug or needle valve. In this case, remove 1/4" vent plug and replace with 1/4" solid plug to energize the secondary O-Ring seal: SHOULD BOTH SEALS LEAK, THE UPPER SECONDARY STEM SEAL MAY BE REPLACED AS FOLLOWS:

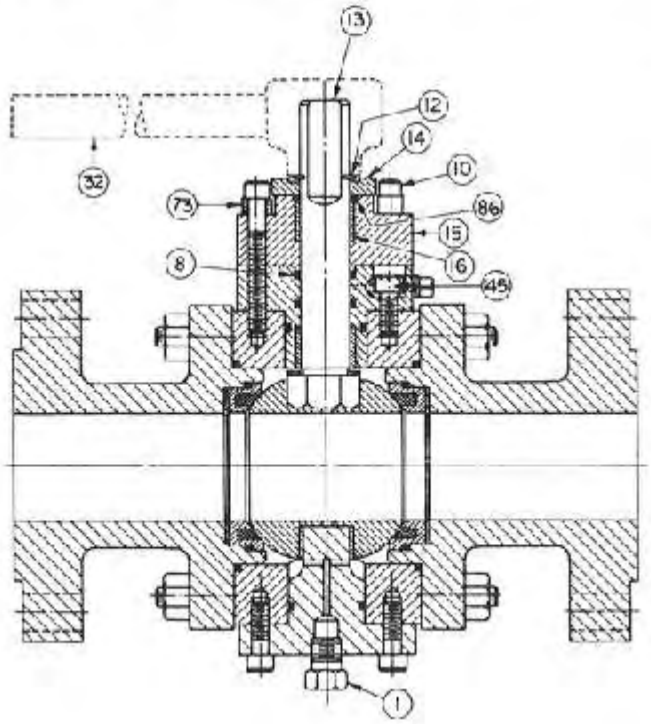

WRENCH OPERATED VALVE

1. Turn valve to fully closed position.
2. Bleed off body pressure - leaving vent valve (1) open.
3. Remove 1/4" NPT pipe plug or vent plug assy. on the gland plate.
   CAUTION: EXERCISE EXTREME CARE WHEN REMOVING THIS PLUG AS IT IS POSSIBLE, EVEN WITH BODY PRESSURE RELIEVED, TO HAVE TRAPPED LINE PRESSURE BEHIND THIS PLUG.
4. Lift off the wrench (32).
5. Remove retaining ring (12) and stop collar (14).
6. File off any burrs and remove all paint from the protruding stem (13). Stem must be perfectly clean and smooth to prevent damage to stem bearing.
7. Remove two bearing housing cap screws (10), and spacers (73). Strike cap screws with hammer and line up punch.
8. Remove, as a unit, the weather seal (86), bearing housing (15), and stem bearing (16). Lift straight up off the stem. Do not cock. Two pry bars may be used to accomplish this.
9. Remove upper stem O-Ring (8) from gland plate recess. Do NOT remove the 2 cap screws (45) which attach the gland plate to the body.
10. Coat new O-Ring with a soft, non-fibrous grease and install in gland plate.
11. Inspect stem bearing for excessive water or damage. Replace is necessary.
12. Clean bearing housing and stem and lubricate with high quality grease.
13. Reassemble parts in reverse order to their removal. Tighten cap screws per torque table, Part XII.
14. Replace 1/4" NPT vent plug or vent plug assembly on gland plate.
15. Close vent valve (1).
16. Open valve partially to repressure body and check integrity of new stem seal.

GEAR OR MOTOR OPERATED VALVE

1. Follow steps 1, 2 and 3 as outlined above for wrench operated valve.
2. With valve in fully closed position, mark vertical line on operator, adapter flange, bearing housing and gland plate to insure correct alignment of these parts at reassembly.
3. Remove cap screws from adapter plate and lift operator off plate. Remove gasket.
   NOTE: Exercise caution when removing operator. It must be lifted straight up until stem is clear.
4. Pull stem adapter, if used, off stem or remove from operator should it remain inside operator.
5. Remove retaining ring and stop collar.
6. Remove bearing housing cap screws and adapter plate.
7. Follow step 6 and 8 thru 13 as above for wrench operated valves.
8. Install adapter plate so that witness marks (step 2) line up and secure with bearing housing cap screws.
9. Replace stop collar and retaining ring.
10. Replace stem adapter, if used, over stem and replace key in adapter.
    NOTE: When valve is in the fully closed position, the flats on stem and adapter keyway are at 90° to valve centerline.
11. Install fiber gasket and lower operator over stem adapter so that operator drive sleeve engages key in adapter, witness marks line up and mounting holes match those on adapter plate.
12. Tighten operator mounting cap screws evenly all around.
13. Replace 1/4" NPT vent plug or vent plug assembly in gland plate.
14. Close vent valve.
15. Check alignment of operator by cycling from closed to open.

C. IN-LINE HYDROSTATIC TESTING

1. Open ball about 1/3". This permits line pressure to enter body cavity.
2. Hydrostatic testing pressure must not exceed 1-1/2 times the maximum rated operating pressure of the valve, unless prior approval to exceed this limit is obtained from Grove.
3. In the fully closed position, test pressures must not exceed the rated operating pressure of the valve.

NOTE: On 2"-4" CL600-1500 B-4C valves, prior to test, remove the relief valve and install a pipe plug. After the test is completed:

a. Close ball valve.
b. Vent any remaining body pressure thru bottom vent plug valve and close tightly.
c. RE-INSTALL THE RELIEF VALVE
   This is very important for protection of the body against over pressure when the valve is in the closed position. CAUTION: DO NOT ALTER THE RELIEF VALVE SETTING.

PART X - Off Stream Maintenance

This part covers major repairs which require removing the valve from the line.

EQUIPMENT

Handling equipment as required for weight involved, see current Grove Ball Valve catalog for weight of specific valve.

A. DISASSEMBLY PROCEDURE

1. If valve is in line, isolate valve from line pressure. Release pressure form inlet and outlet ports.
2. Loosen bleeder screw of vent plug in bottom of valve.
3. Place valve in open position (Flats on stem parallel with bore).
4. Remove valve from line.
5. Remove the wrench or operator per instructions in Part IX.
6. Remove stop collar, adapter plate and bearing housing per instructions in Part IX.
7. Remove two gland plate cap screws. Strike with hammer and line up punch.
8. Remove stem and gland plate assembly as a unit. Two pry bars may be useful in separating the gland plate from the body.
9. Position valve so that it rests on one port face.
10. Scribe witness marks across interface of body and both closure flanges. Also across trunnion flange and body.
11. Remove four trunnion cap screws and withdraw trunnion assembly as a unit.
12. Remove nuts from studs on upper closure flange and remove closure assembly.
13. Remove ball and bearing as one unit.
14. Back-off nuts from lower closure flange and lift body from closure.
15. Separate body O-Rings from body.
16. From closures, disassemble seat units, gasket O-Rings and springs.
    NOTE: 2" - 4" Class 600 - 1500 B-4C valves have two-piece seats with O-Ring seat seals. Follow instructions in Part IV-A, step 14, except U-Cups are not used.
17. Disassemble trunnion by removing O-Ring and vent plug assembly.
18. Gland plate disassembly. Carefully remove the stem and thrust bearing. Pull out stem bearing ONLY if it needs to be replaced. Remove two stem O-Rings and gland plate O-Ring. Remove vented assembly plug.
    NOTE: If valve has not been leaking through stem O-Rings, and stem torque has not been excessive, OMIT THIS STEP. Stem seals are likely to be damaged when being removed or when the stem is being removed unless extreme care is taken.

B. INSPECTION AND CLEANING

1. Wipe metal parts with soft cloth using a petroleum solvent.
2. Wipe O-Rings with a clean dry cloth. Wash in mild soap and rinse thoroughly in clean water.
3. Inspect metal parts for damage or burrs on sealing and moving contact surfaces. Scratches, produced by disassembly on those surfaces contacted by O-Rings, must be removed. Make certain that these surfaces are smooth and free of abrasion damage.
4. Inspect stem bearings and trunnion bearing for excessive wear or damage. Stem bearings will be damaged if upper part of stem was not properly de-burred and cleaned prior to disassembly.
5. Inspect O-Rings and seat units for cuts, extrusions, swelling or imbedded particles.
6. Replace defective parts.
   NOTE: Body and seat O-Rings are made to stretch with a certain tension when installed. Any excessive stretching or swelling of O-Rings may cause cutting on reassembly. It is not safe to re-use these parts unless their dimensions are carefully checked against new parts.

C. LUBRICATION

1. For temperatures from –50° to +225°F, lubricate all moving contact metal surfaces with a low temperature, high quality grease. Lubricate O-Rings with heavy grease (Marlak #3 or equal).
2. For temperatures +10°F to +350°F, lubricate all moving contact metal surfaces and O-Rings with Bracote 622 wide temperature grease or equivalent.

D. REASSEMBLY

1. Place all parts on a clean, solid surface. If flanged, be careful not to damage sealing surface.
2. Gland Plate Preassembly:
   a. Assemble parts shown in sketch.
   b. The thrust bearing is installed with the slick side contacting the thrust surface on stem shoulder.
   c. The stem must be inserted with slow, even pressure to avoid damaging the stem O-Ring.

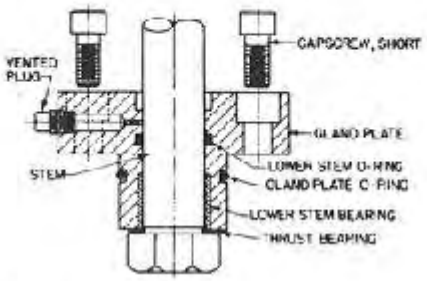

3. Trunnion Preassembly
   a. Install O-Ring as shown.

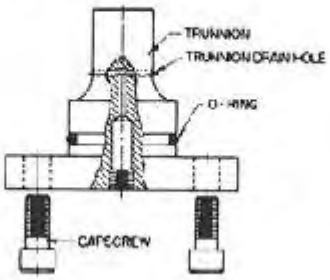

4. Closure/Seat Assembly
   a. Install spring washer (as shown) and body O-Ring on closures.
   NOTE: With the nylon seat design, install the spring washer so that it contacts the INNER diameter of the seat ring. With the O-Ring (2 Piece) B-4C seat design, the spring is reversed and contacts the OUTER seat diameter.

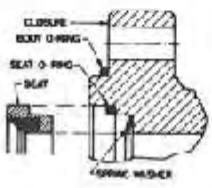

B-4B
ONE PIECE NYLON SEAT

2", 3" & 4"
Class 150 & 300

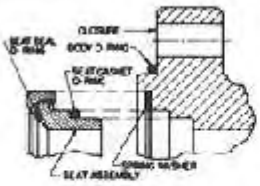

B-4C
TWO PIECE SEAT

2"-4" CL 600/1500
Refer to PART IV-D, Step 4
For assembly instructions.
U-Cup is not used.

NOTE: Some older valves with this seat design use coil springs instead of the spring washer.

b. Slip well-greased seat O-Ring into closure or over seat depending on seat design (Below).

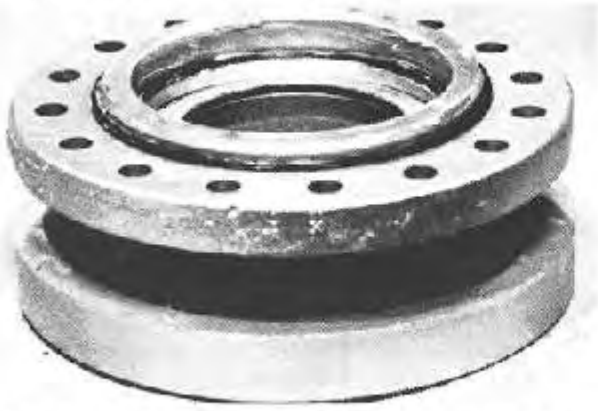

c. If valve has the O-Ring seat design, position the vent holes in the outer seat ring so that they are centered between any two closure flange stud holes. Clearly mark the position of the vent holes on the O.D. of closure flange.

d. Carefully press seat assembly into closure counterbore, using even pressure to avoid cocking the seat.



5. Bearing Housing Preassembly
   a. Install new stem bearing if necessary.
   NOTE: On gear operated valves, spacers are replaced by adapter plate.

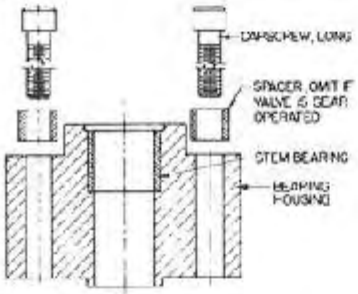

6. Replace body studs, if necessary.
7. Install ball (with trunnion bearing) into body and turn ball to open position.

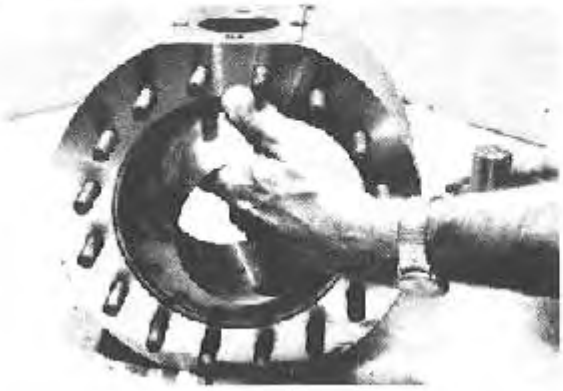

8. Insert trunnion assembly of Step 3 through the body into the ball, observing witness marks previously made between trunnion and body. THE DRAIN HOLE IN TRUNNION SHOULD BE PERPENDICULAR TO VALVE BORE. Tighten cap screws per torque Table in Part XII.

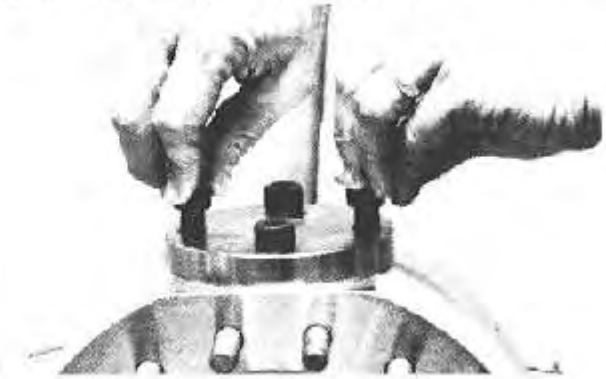

9. Insert gland plate assembly of Step 2.
   a. Position stem so that flats are parallel with valve bore when ball is in open position.
   b. Tighten cap screws per torque Table in Part XII.

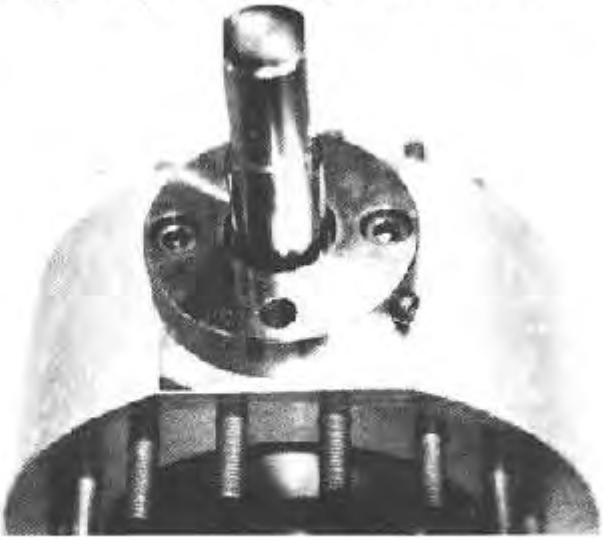

10. Install closure/seat assembly of Step 4 on body.
    a. Make certain Body O-Ring gland is clean and free of burrs.
    b. If valve has the nylon seat design, align witness marks previously made on body closures. Line flange holes must straddle vertical centerline.
    c. If valve has the O-Ring seat design, observe the marks made on the closure flange O.D. when seat was installed. These marks show the location of the seat vent holes. Position the closure on body so that these marks are at 90° to the stem axis.
    d. Tighten nuts per torque Table in Part XII.



11. Install upper stem O-Ring into gland plate counterbore.

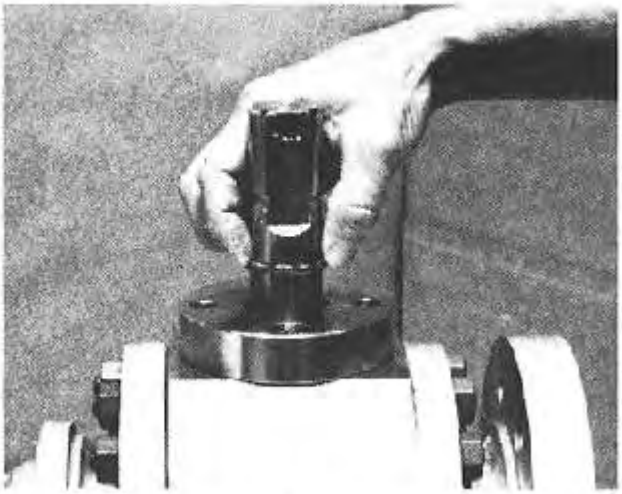

12. Replace bearing housing assembly of Step 5. Tighten cap screws per toqure Table in PART XII if valve is wrench operated.

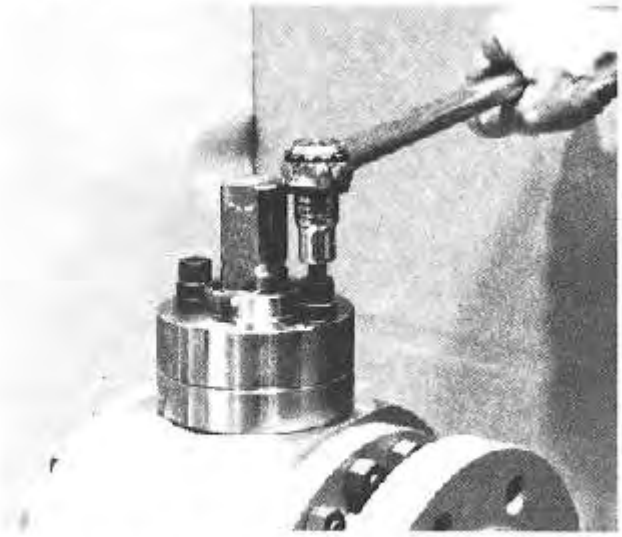

13. If valve is wrench operated:
    a. Replace weather seal, stop collar and retaining ring.
    b. Replace wrench.

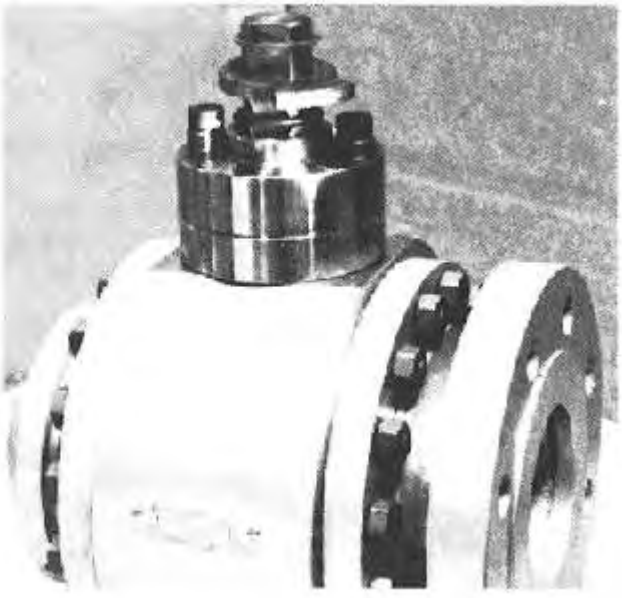

14. If valve is gear operated:
    a. Install adapter plate on top of bearing housing so that witness marks line up.
    b. Tighten bearing housing cap screws per torque table in Part XII.



    c. Replace weather seal, stop collar and retaining ring.
    d. Install stem adapter, if used, over stem and replace key. With valve in fully open position, key will be on valve bore center line.
    e. Replace fiber gasket on adapter plate.
    f. Replace operator so that operator drive sleeve engages key in stem adapter and witness marks line up.

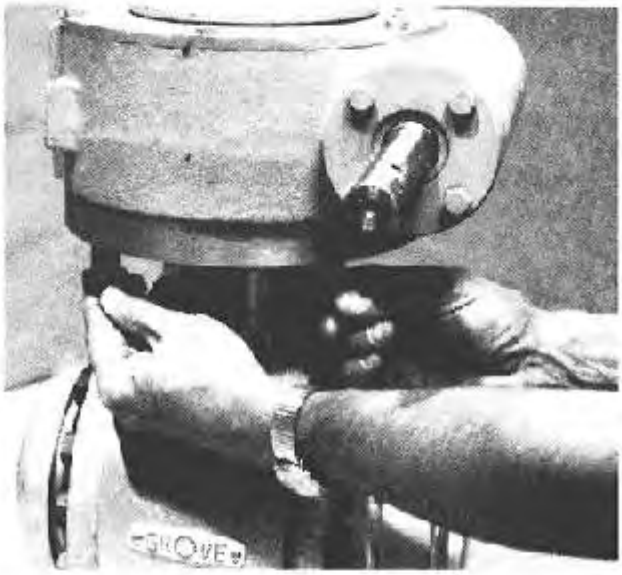

    g. Replace operator mounting cap screws and tighten evenly all around hand-tight.
    h. Check alignment of operator by cycling from fully open to fully closed position. If valve operates freely, wrench-tighten cap screws evenly.

E. TESTING FOR LEAKAGE.

1. Close valve fully.
2. Admit 50 PSI air or nitrogen to body cavity through trunnion vent port. Lock off body pressure.
3. If pressure holds steady, all seals are tight.
4. If body pressure falls steadily, apply soap solution to ball/seat circumference, closure flange to body interface and to vented plug in gland plate. Release pressure, disassemble and repair area of leakage.
5. Vent air pressure from body.
6. Install vent plug assembly in trunnion.

PART XI - Accessory Installation

A. MOUNTING GEAR OPERATORS AND SETTING OPERATOR STOPS.

1. Before mounting the operator on the valve, grease the valve stem. Check the key to see that it is the proper length and fits the key slot without excessive play. Lower the operator over the stem and bolt down to the valve adapter plate. Tighten bolts securely.
   NOTE: If operator fits tight over the valve stem, DO NOT force down by taking up on the bolts. This will lock-up the ball and cause excessive torque. Check for scratches or burrs and polish to provide smooth sliding surfaces.
2. The valve internal stop is designed to serve as an indicator of the ball open and closed positions. This stop permits slightly more than 90° travel in order that the stops in the operator can be set to serve as the actual stopping means. After the operator has been properly installed on the valve, the operator stops can be set as follows:
   Off-Stream (Valve removed from line)
   a. Back-off locknuts and stop screws on both sides of the operator.
   b. Turn handwheel clockwise until ball is about half closed.
   c. From the table, find the arc length for the size of the valve, and measure off this distance from ball bore lip along horizontal center line. Make a pencil mark on the ball at this point. (Refer to sketch).

Horizontal Plane Thru Valve Bore Centerline

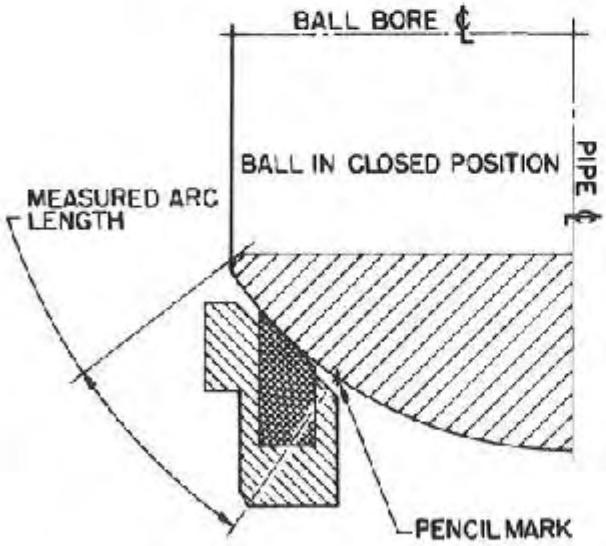

One Place (Nylon) Seats

VALVE SIZE	MEASURED ARC LENGTH (Inches)
1-1/2"	17/32 ± 1/16
2"	9/16 ± 1/16
3"	23/32 ± 1/16
4"	55/64 ± 1/16

   d. Continue to turn valve towards the closed position until the pencil mark is flush with the I.D. of the seat ring.
   e. Turn the operator "close" stop screw until it can go no further. Tighten the locknut.
   f. Turn operator handwheel counter-clockwise until bore of the ball lines up visually with bore of seat ring.
   g. Advance "open" operator stop screw until it can go no further and tighten the locknut.

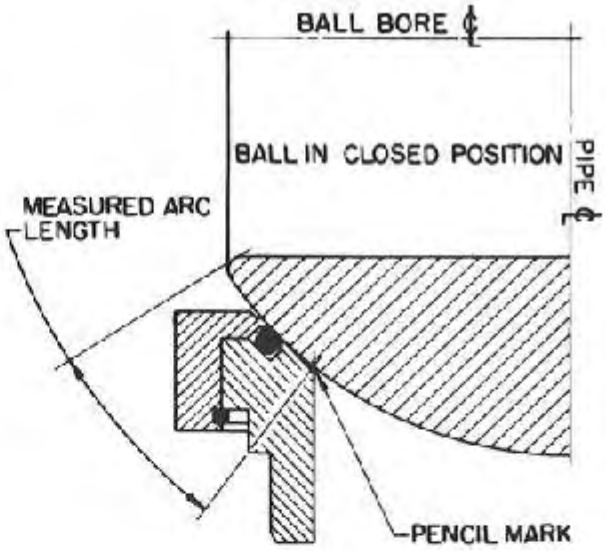

Two-Piece O-Ring Seats (4" Class 600/1500)

VALVE SIZE	MEASURED ARC LENGTH (Inches)
2"	9/16 ± 1/16
3"	23/32 ± 1/16
4"	55/64 ± 1/16

   On-stream (Valve in pipeline and under pressure)
   a. Back-off locknuts and stop screws on both sides of the operator.
   b. Turn handwheel in a clockwise direction as far as it will go. This places valve in maximum closed position as permitted by the stop collar of the valve.
   c. Vent body cavity pressure thru special vent valve. If CONTINUOUS drainage occurs, slowly turn handwheel counter-clockwise until drainage just stops.
   d. From this handwheel position, COUNT THE NUMBER OF HANDWHEEL TURNS in counter-clockwise direction required to initiate flow from vent port. Do not overshoot.
   e. Turn handwheel CLOCKWISE one half the counted number of turns determined in "d" above.
   f. Turn the operator stop screw until it will go no further. Tighten the locknut.
   g. Tighten the vent plug assembly. Close vent valve.
   h. From the handwheel position in Step "f", turn the handwheel COUNTER-CLOCKWISE the number of turns for 90° rotation indicated in the table for the operator involved.
   j. Advance the other operator stop screw until it will go no further. Tighten the locknut.
   NOTE: For valves isolated from line pressure, the above stop setting procedure may be accomplished by using 50 psi air or nitrogen pressure introduced into body cavity of closed valve thru vent port in trunnion. For setting stops on other gear or power operators, refer to the manufacturer's instructions.

PART XII - Miscellaneous - A. Bolting Torques

Body Stud Torque (B-4B & B-4C)

STUD SIZE	Torque* (ft.-lb.) Lubed (Moly)
1/2 - 13 UNC	55
5/8 - 11 UNC	105
3/4 - 10 UNC	180
7/8 - 9 UNC	300

Capscrew Torque (B-4B & B-4C)

CAPSCREW SIZE	TORQUE (ft. - lbs.) Min	Max
5/16 - 18	10	15
7/16 - 14	27	40.
1/2 - 13	40	60

PART NAME	
1. Body	12. Vent Plug Assembly
1A. Closure	13. Gland Plate
2. Ball	14. Bearing Housing
3. Seat Unit	15. Spring Washer
4. *O-Rings	16. Capscrew (Bearing Housing)
5. Stem	17. Capscrew (Gland Plate)
6. Bearings	18. Stud
7. Stop retaining Ring	19. Nut
8. Stop Collar	20. Capscrew (Trunnion)
9. Wrench	21. Weather Seal
10. Trunnion	22. Outer Seat Ring
11. Thrust Washer	23. Inner Seat Ring

Isometric - Typical B-4B & B-4C

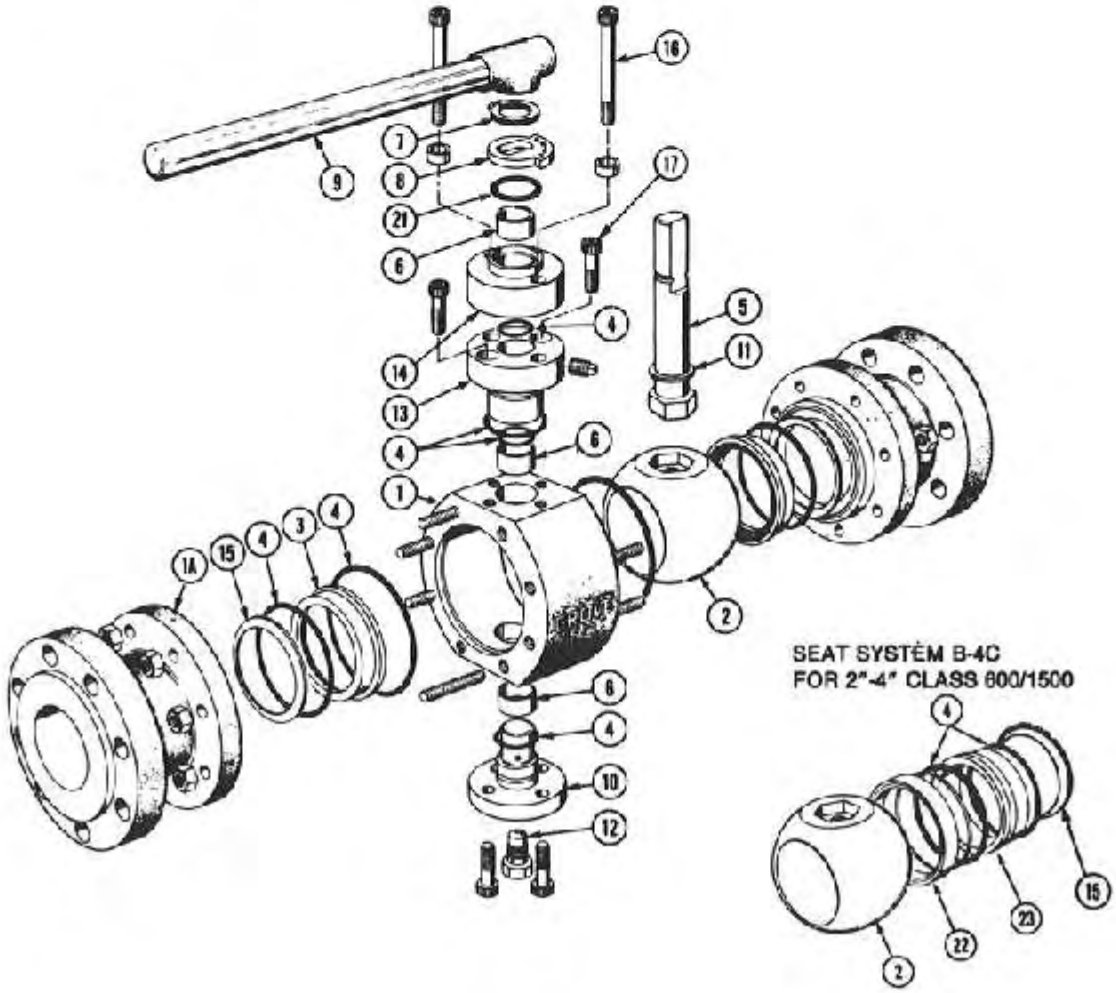

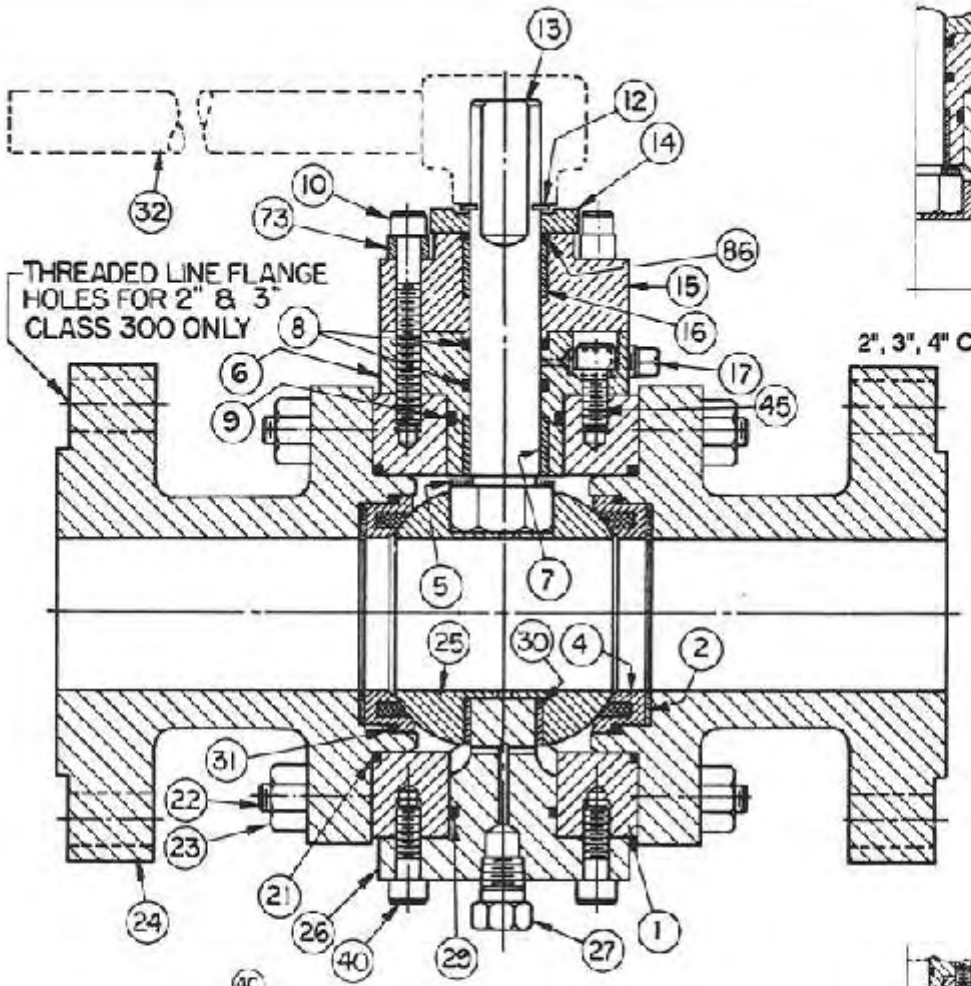

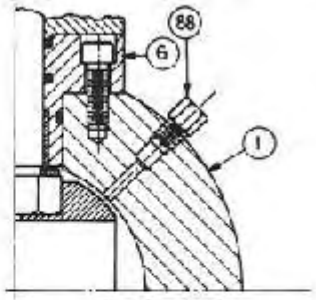

END VIEW
2", 3", 4" CLASS 600/1500 ONLY B-4C

	ITEM	PART NAME	MATERIAL
B‡	2	SPRING WASHER	SPRING STEEL
B‡	4	SEAT UNIT	STL & SYNTHETIC MAT'L
A‡	5	THRUST BEARING	STEEL & TEFLON**
	6	GLAND PLATE	STEEL
	7	STEM BEARING (LOWER)	STEEL & TEFLON**
A‡	8	STEM O-RING	GROVEX®
A‡	9	GLAND PLATE O RING	GROVEX®
	10	CAPSCREW (BEARING HOUSING)	ALLOY STEEL
	12	RETAINING RING	STEEL
	13	STEM	STEEL
	14	STOP COLLAR	STEEL
	15	BEARING HOUSING	STEEL
A‡	16	STEM BEARING (UPPER)	STEEL & TEFLON**
	17	VENTED PLUG	STEEL
A‡	21	BODY O-RING	GROVEX®
	22	STUD	ALLOY STEEL
	22A	CAPSCREW (PLATE CLOSURE)	ALLOY STEEL
	23	NUT	ALLOY STEEL
	24	CLOSURE	STEEL
C‡	25	BALL (WITH BEARING)	STEEL
	26	TRUNNION	STEEL
	27	VENT PLUG ASSY	ALLOY STEEL
A‡	29	TRUNNION O RING	GROVEX ®
	30	TRUNNION BEARING	STEEL & TEFLON**
A‡	31	SEAT O-RING	GROVEX®
	32	WRENCH	STEEL
	40	CAPSCREW (TRUNNION)	ALLOY STEEL
	45	CAPSCREW (GLAND PLATE)	ALLOY STEEL
	73	SPACER	STEEL
A‡	86	O-RING (WEATHER SEAL)	GROVEX®

FOLLOWING PARTS USED ONLY WITH O-RING SEAT IN 4-INCH CLASS 600 - 1500

B‡	2A	SEAT SPRING	SPRING STEEL
D‡	4	INNER SEAT RING	STEEL
B‡	4A	OUTER SEAT RING	STEEL
B‡	4B	SEAT LOCK RING	C.R.S.
D‡	4C	PIN, SEAT RING	C.R.S.
B‡	4D	SEAL O-RING	GROVEX®
A‡	86	RELIEF VALVE (BODY)	STEEL

‡ RECOMMENDED FOR SPARE PARTS (SPARE PARTS, KITS, A, B, & C)
® A GROVE TRADENAME COVERING A VARIETY OF ELASTOMERIC MATERIALS
** TRADEMARK OF E.I. DUPONT CO.

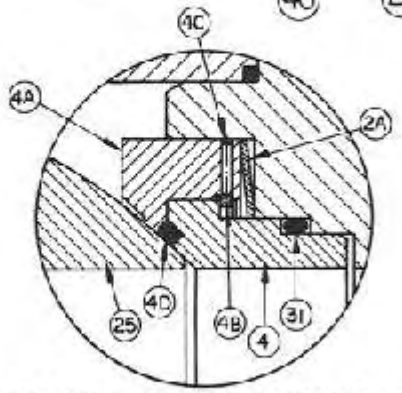

SEAT DETAIL FOR 2"-4" CLASS 600/1500 B-4C

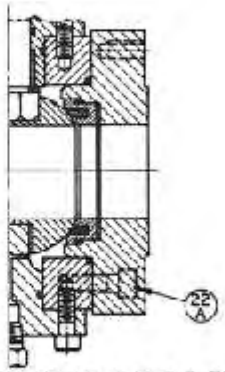

2", 3" & 4" CLASS 150 B-4B R.F. FLANGE
PLATE FLANGES WITH TAPPED HOLES
FOR FLANGE BOLTING

GROVE VALVE & REGULATOR CO.
6529 HOLLIS STREET OAKLAND, CALIF.

MODEL	DESCRIPTION
B-4B & B-4C BALL VALVE	TYPICAL CONSTRUCTION WRENCH OPERATED 2"- 4" CL. 150-1500

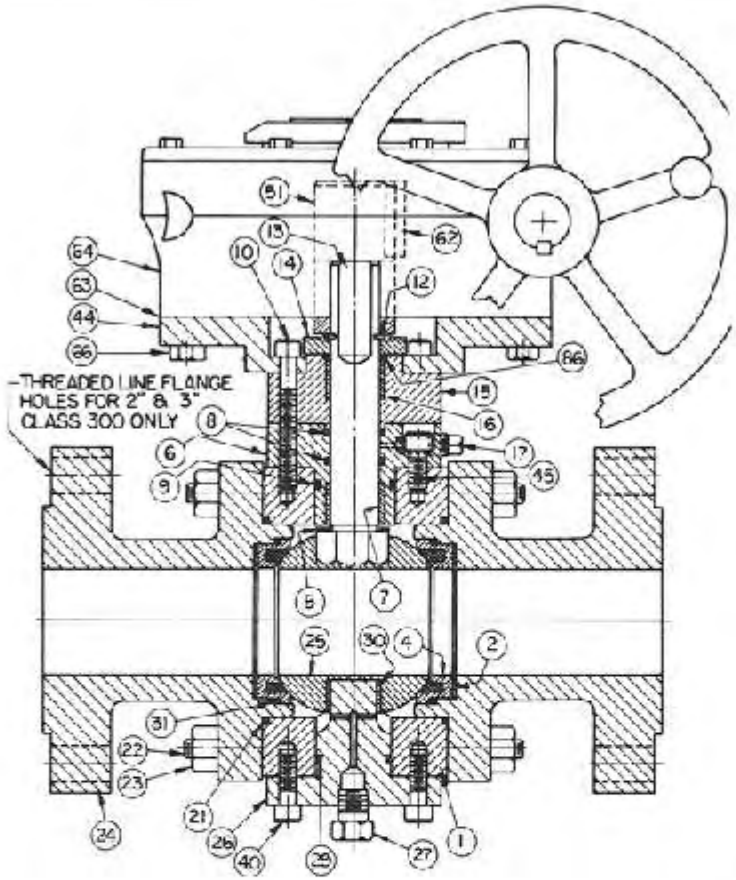

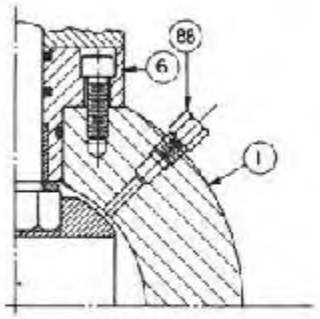

END VIEW
2", 3", 4" CLASS 600TO1500 ONLY
B-4C

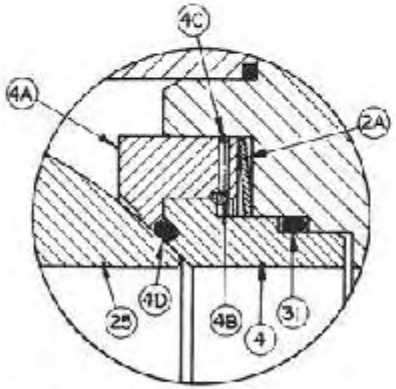

SEAT DETAIL FOR 2"-4" CLASS 600/1500 B-4C

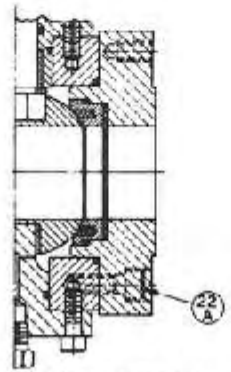

2", 3" & 4" CLASS 150 R.F. FLANGE B-4B
PLATE FLANGES WITH TAPPED HOLES
FOR FLANGE BOLTING

	ITEM	PART NAME	MATERIAL
B‡	2	SPRING WASHER	SPRING STEEL
B‡	4	SEAT UNIT	STL & SYNTHETIC MATL
A‡	5	THRUST BEARING	STEEL & TEFLON**
	6	GLAND PLATE	STEEL
	7	STEM BEARING (LOWER)	STEEL & TEFLON**
A‡	8	STEM O-RING	GROVEX®
A‡	9	GLAND PLATE O-RING	GROVEX®
	10	CAPSCREW (BEARING HOUSING)	ALLOY STEEL
	12	RETAINING RING	STEEL
	13	STEM	STEEL
	14	STOP COLLAR	STEEL
	15	BEARING HOUSING	STEEL
A‡	16	STEM BEARING (UPPER)	STEEL & TEFLON**
	17	VENTED PLUG	STEEL
A‡	21	BODY O-RING	GROVEX®
	22	STUD	ALLOY STEEL
	22A	CAPSCREW (PLATE CLOSURE)	ALLOY STEEL
	23	NUT	ALLOY STEEL
	24	CLOSURE	STEEL
C‡	25	BALL	STEEL
	26	TRUNNION	STEEL
	27	VENT PLUG ASSY	ALLOY STEEL
A‡	29	TRUNNION O-RING	GROVEX®
	30	TRUNNION BEARING	STEEL & TEFLON**
A‡	31	SEAT O-RING	GROVEX®
	40	CAPSCREW (TRUNNION)	ALLOY STEEL
	44	ADAPTER PLATE	STEEL
	45	CAPSCREW (GLAND PLATE)	ALLOY STEEL
***	51	SHAFT ADAPTER	STEEL
***	62	KEY	STEEL
E	63	GASKET	FIBER
	64	OPERATOR	STEEL & IRON
	66	CAPSCREW (OPER. MT.)	STEEL
A‡	86	O-RING (WEATHER SEAL)	GROVEX®

FOLLOWING PARTS USED ONLY WITH O-RING SEAT IN 4-INCH CLASS 600 - 1500

B‡	2A	SEAT SPRING	SPRING STEEL
B†	4	INNER SEAT RING	STEEL
B‡	4A	OUTER SEAT RING	STEEL
B‡	4B	SEAT LOCK RING	C.R.S.
B‡	4C	PIN SEAT RING	C.R.S.
A‡	4D	SEAL O-RING	GROVEX®
	60	RELIEF VALVE (BODY)	STEEL

*** NOT USED WITH GV-2 OPERATOR ON 4" VALVES
‡ RECOMMENDED FOR SPARE PARTS (SPARE PARTS KITS, A, B, & C)
® A GROVE TRADENAME COVERING A VARIETY OF ELASTOMERIC MATERIALS
** TRADEMARK OF E.I DUPONT CO.

GROVE VALVE & REGULATOR CO.
6529 HOLLIS STREET — OAKLAND, CALIF.

MODEL	DESCRIPTION
B-4B & B-4C BALL VALVE	TYPICAL CONSTRUCTION GEAR OPERATED 2"- 4" CL. 150-1500

GROVE

COOPER CAMERON VALVES

COOPER CAMERON VALVES
3250 Briarpark Drive, Suite 300
Houston, Texas 77042
USA Toll Free 800 323 9160
www.ccvalve.com

Bulletin No. B-IRM 11/04 (2.5M)

CAMERON

GROVE
B4, B5 and B7 Side-entry Ball Valves

TECHNOLOGY



Table of Contents

GROVE B4, B5 AND B7 SIDE-ENTRY BALL VALVES

Features and Benefits

Applications....1

GROVE B4
- Design Features....2
- Materials Specifications....4
- Optional Features....5
- Special Applications....6

GROVE B4-B4.D
- Valve Assembly and Cross Section....7
- Dimensions and Weights....8

GROVE B5
- Design Features....11
- Valve Assembly and Cross Section....14
- Dimensions and Weights....15

GROVE B7
- Design Features....21

GROVE B7.B
- Valve Assembly and Cross Section....22

GROVE B7.1 AND B7.B
- Dimensions and Weights....23

QUALITY SYSTEM....24

QUALIFICATION TESTING....25

CAMSERV SERVICES FOR VALVES AND ACTUATION....26

TRADEMARK INFORMATION....27

GROVE B4, B5 & B7 Side-entry Ball Valves

FEATURES AND BENEFITS

Cameron's Valves & Measurement business segment is a leading provider of valves and measurement systems to the oil and gas industry.

We provide large-diameter valves for use in natural gas, LNG, crude oil and refined products transmission lines as well as in many other general industrial applications.

Rigorously tested, field-proven and backed by our CAMSERV™ aftermarket services, Cameron's GROVE® valves are among the best known valves in the world.

Applications



GROVE split-body side-entry ball valves are manufactured in a wide range of diameters and pressure classes.

In the standard versions, the valves are specified for transmission pipelines, pumping, compression and reinjection units, offshore platforms, onshore terminals, pig traps, measuring stations and surge-relief skids.

In the special versions, the valves are used for subsea installations and in LNG plants.

Split-body construction allows the use of forged materials in various grades of carbon steel, stainless steel and high alloys, thus complying with the most severe service conditions.

Size		ASME CLASS						
(in.)	(mm)	150	300	400	600	900	1500	2500
1-1/2	(40)	●	●	●	●	●	●	▲
2	(50)	●	●	●	●	●	●	▲
3	(80)	●	●	●	●	●	●	▲
4	(100)	●	●	●	●	●	●	▲
6	(150)	■	■	■	■	■	■	▲
8	(200)	■	■	■	■	■	■	◆
10	(250)	■	■	■	■	■	■	◆
12	(300)	■	■	■	■	■	■	◆
14	(350)	■	■	■	■	■	■	◆
16	(400)	■	■	■	■	■	■	◆
18	(450)	■	■	■	■	■	■	◆
20	(500)	■	■	■	■	■	■	◆
22	(550)	■	■	■	■	■	■	
24	(600)	■	■	■	■	■	■	
26	(650)	■	■	■	■	■	■	
28	(700)	■	■	■	■	■	■	
30	(750)	■	■	■	■	■	■	
32	(800)	■	■	■	■	■	■	
34	(850)	■	■	■	■	■	■	
36	(900)	■	■	■	■	■	■	
40	(1000)	■	■	■	■	■		
42	(1050)	■	■	■	■	■		
46	(1150)	■	■	■	■	■		
48	(1200)	■	■	■	■	■		
56	(1400)	■	■	■	■			
60	(1500)	■	■	■	■			

B4 ● B5 ■ B7.1 ▲ B7.B ◆

GROVE B4

DESIGN FEATURES

Standard Features

The standard design valve code is B4.D.

- Double-barrier stem seals (the upper seal can be replaced with the valves in-line, under pressure, with the ball in the closed position)
- Short coupled trunnions reduce unit bearing loads and operating torque
- Factory-positioned external stops
- Stem separated from the ball; anti-blowout design; side load on stem
- Plastic polymer insert for seat sealing
- Self-relieving seats for ASME Classes 150 and 300
- Metal-backed, self-lubricating PTFE sleeve bearing and thrust washers reduce torque and extend service life
- Nickel plating for trim parts
- Fire-safe graphite rings for protection against external leakage



Features Upon Request

According to the design impact of the optional features, the valve code may change to B4.B, B4.C, etc.

B4 – ALL TYPES

- PTFE various grades of reinforced gaskets, spring energized, for stem and seat sealing
- Antistatic device
- Metal-to-metal seats
- Double-sealing barrier in both directions (DPE) for ASME Classes 600, 900 and 1500; body relief valve for overpressure due to liquid thermal expansion
- Double block-and-bleed
- Explosive decompression-resistant seals

B4.B TYPE

When the valve design includes one or more of the following variations with respect to the standard design, the denomination becomes B4.B.

- Triple-barrier stem seals; upper stem seal O-ring replaceable with pressure in-line with the ball in the closed position
- Self-relieving seats

B4.C TYPE

This version of the B4 valves (in ASME Classes 600, 900 and 1500) features:

- O-ring seat seal
- Double-sealing barrier in both directions (DPE) and body pressure relief valve



Body Construction

The body is made of three forged parts, and the bolted construction allows disassembly on the job site for repairs. The body drain is located in the lowest part of the body cavity and consists of a 1/4" NPT drain valve with safety plug. Graphite rings are provided to guarantee full compliance with API 6FA and BS 6755 Part 2 fire-safe standards.

Stem Construction

The stem function is to transmit torque and to absorb the line pressure thrust together with the trunnion. The stem of the GROVE B4 valves has an anti-blowout design and incorporates a double-barrier system. The pressure thrust on the stem is supported by a thrust washer in antifriction material.

Seat Seal

The soft sealing between the seat and the ball is achieved by a plastic insert on B4.B, B4.D valves and by an O-ring on B4.C valves.

The block-and-bleed and double block-and-bleed requirements are available as per API 6D definition on all types of B4 valves.

Self-relieving seats are standard on all B4.B, B4.C and B4.D ASME Classes 150 and 300.

Independent sealing on upstream and downstream seats is available on B4.C and B4.D ASME Classes 600, 900 and 1500.

Ball Position

For valves normally mounted with lever, the ball open and closed positions are ensured by corresponding stops on the bearing housing. The lever position parallel to the line flow means the valve is open. For valves with gear or actuators, the stops are set at the factory as primary stops. An “open/closed” indicator also is provided.









MATERIALS SPECIFICATIONS

Materials Selection

The quality of the valve design also depends on the material selection.

After examination of service conditions, the selection criteria are based on the verification of the physical and chemical characteristics of the materials or product.

For the soft sealing (O-rings, inserts and lip seal gaskets), the guidelines to be followed are relevant for hardness, tensile strength, modulus, compression set, swelling and fluid suitability.

The process is qualified so that the final thickness after machining can guarantee the chemical composition as per the relevant ASTM standard. The final check is carried out by the liquid penetrant method.

Weld Overlays

Sealing areas and other critical parts of the valve can be weld overlayed in case of corrosive service.

More frequently used materials are AISI 316L and Alloy 625.



Duplex Stainless Steels Metallurgy

On duplex (22 Cr to 2 Ni) and superduplex (25 Cr to 5 Ni) stainless steels, corrosion-resistance qualification check can be as follows:

- Chloride corrosion as per ASTM G48 (104° F or 40° C, 72 hours)
- Cracking as per ASTM G36 (302° F or 150° C, 500 hours)
- Pitting corrosion PRE = 33 min. for duplex, 40 min. for superduplex
- Ferrite content 40% to 60%, as per ASTM E562

NACE Requirements

On request, GROVE side-entry ball valves can be supplied in accordance with NACE MR0175.

Severe Wet Sour Gas Service

In addition to NACE MR0175, the additional qualifications can be:

- Sulfur ≤ 0.015%
- Hydrogen-induced cracking as per NACE TM-02-84 (96 hours)
- Sulfide stress corrosion cracking as per NACE TM-01-77 (720 hours)



OPTIONAL FEATURES

Metal-to-Metal Seats

The contact area between the seats and the ball can be completely metallic. This feature is required when the normal soft sealing is no longer suitable due to the unfavorable combination of pressure, temperature and chemical composition of the medium when solid particles are present and when operating conditions prevail on the need of the fully tight sealing.

In case of metal-to-metal seats, the ball and seats coating can be obtained by means of various materials and processes such as:

- Electroless nickel plating
- High-velocity application of carbide powder

When utilizing the metallic seats, it is necessary to verify the structure of the stem/ball coupling and the actuator choice, as there is an increase in the valve torque.

Stem Extensions

GROVE ball valves can be provided with optional stem extensions to permit buried or underground installations in remote or inaccessible areas.

When used for buried valve service, the stem extensions can be furnished watertight, and the piping of the grease injection system also will be extended.

When ordering extensions, please specify the distance required from the valve centerline to the handwheel centerline.

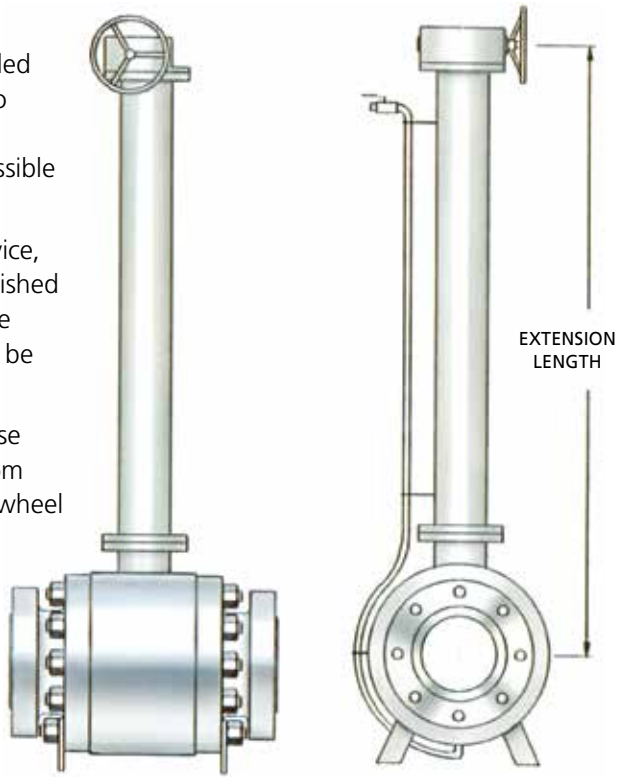

Transition Pieces

Cameron can weld transition pieces to the valve during the manufacturing process. Transition can be supplied by the customer or by Cameron to suit the customer's specifications.

Cameron offers a wide variety of weld procedures in accordance with international standards.

Other

Upon request, the valve can be furnished with specific adjustments for the installation with the horizontal stem.

Also upon request, the wrenches, gearboxes and actuators can be supplied with locking devices to suit the customer's specifications.



"S" Design for Subsea Service

The "S" valves are the subsea versions of the B4, B5 and B7 ball valves, specifically designed to suit subsea service conditions.

The "S" design takes into consideration the restrictive criteria used in the definition of safety coefficients relative to both pressure-retaining components and the stem connection between the valve and actuator, making the "S" valve suitable for EDS service.

The critical internal sealing surfaces are protected from corrosion resistance by the overlay, generally dictated by customer specifications and checked by chemical analysis of test specimens and the part(s).

The body is coated with special products and the body/bonnet bolts are protected with special protective coatings and special sealing caps. The stem and external sealing areas are protected with additional seawater sealing gaskets.

The "S" valve is designed to be reliable and to provide optimum service with no maintenance. It usually is installed on modular rigs placed on the seafloor, complete with necessary components. When necessary, substitution or complete removal of these modules is possible.

"L" Design For Low-temperature Service

For certain gas treatment processes (LNG) and blowdown conditions, the valve must be able to limit the leakage within specified value and to ensure the maneuverability at a low temperature. The B4-L, B5-L and B7-L valves are suitable for temperatures down to -184° F (-120° C).

The valves are referred to the respective standard types, but materials, parts dimensions, surface finishing, gaskets and stem connections are specifically designed to suit low temperatures.

Epoxy-Phenolic Internal Coating

Cameron has developed a technology for anti-corrosive internal coatings. The products have been designed for oil brine, seawater and drinking water service, sour and corrosive applications.

The final thickness can be 180 to 350 microns. Hydrostatic shell testing is conducted before and after coating and thickness and holiday testing records are maintained.



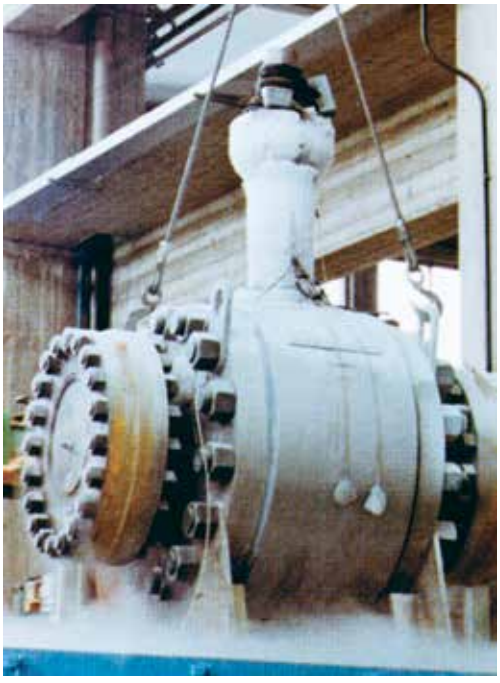

GROVE B4-B4.D

VALVE ASSEMBLY AND CROSS SECTION

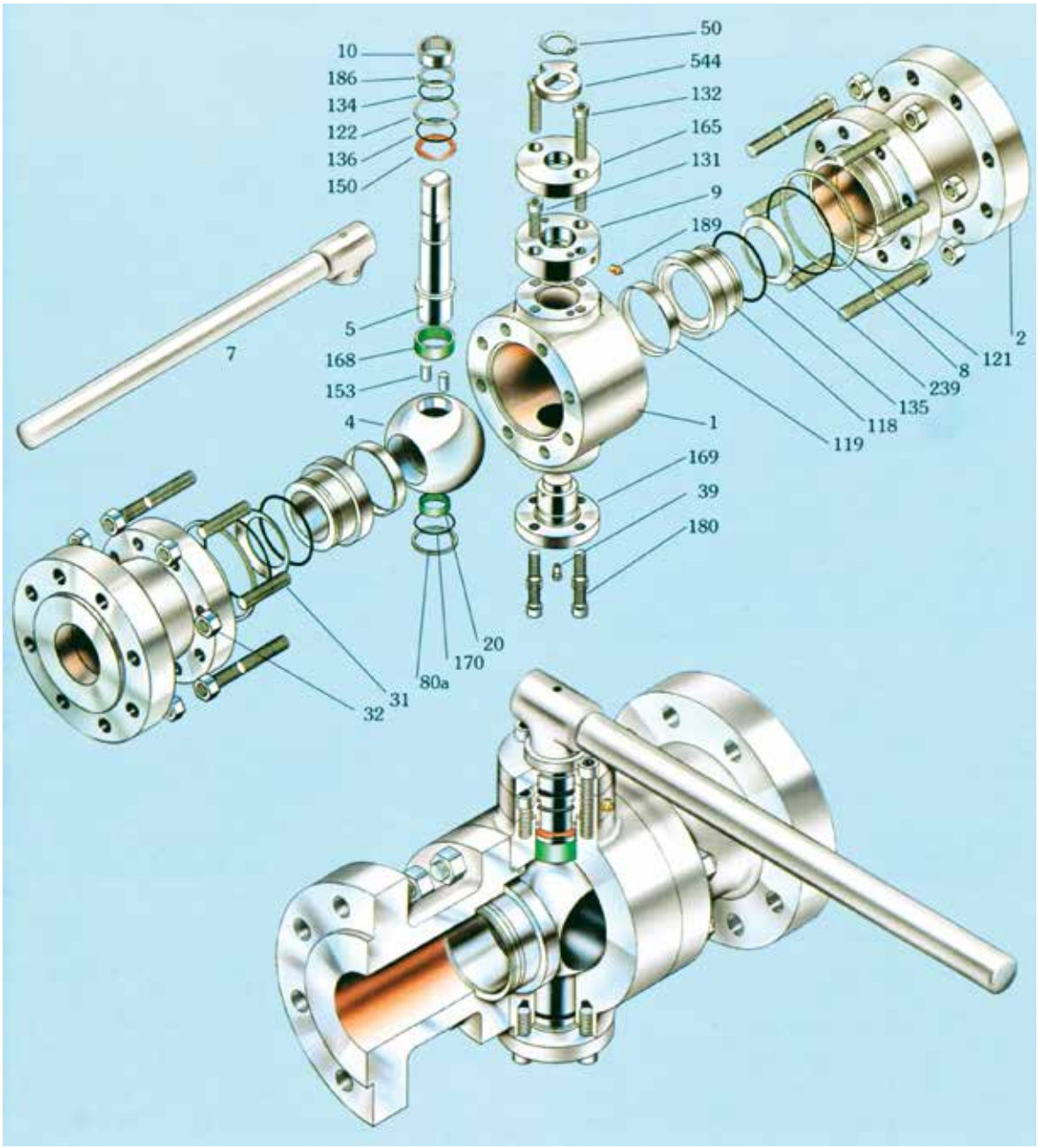

Item	Description	Item	Description	Item	Description
1	Body	39	Drain Valve	150	Upper Thrust Washer
2	Closure	50	Seeger Ring	153	Drive Pin
4	Ball	80a	Lower Trunnion Fire-safe Seal	165	Bearing Housing
5	Stem	118	Standard Seat Ring	168	Stem Bearing
7	Wrench Unit	119	Seat Insert	169	Lower Trunnion
8	Closure O-ring	121	Closure Fire-safe Seal	170	Trunnion O-ring
9	Gland Plate	122	Gland Plate Fire-safe Seal	180	Lower Trunnion Capscrew
10	Gland Bushing	131	Gland Plate Capscrew	186	Stem Fire-safe Packing
20	Trunnion Bearing	132	Bearing Housing Capscrew	189	Gland Vent
31	Body Stud	134	Stem O-ring	239	Spring Washer
32	Body Stud Nut	135	Seat Gasket O-ring	544	Stop Collar
		136	Gland Plate O-ring		

DIMENSIONS AND WEIGHTS

ASME CLASS 150

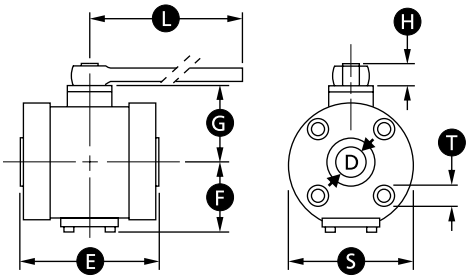

Size (in.)	Thread	T (in.) Depth	Hole (in.)
1-1/2	1/2 UNC	13/16	4
2	5/8 UNC	15/16	4
3	5/8 UNC	15/16	4
4	5/8 UNC	15/16	8

ASME CLASS 300

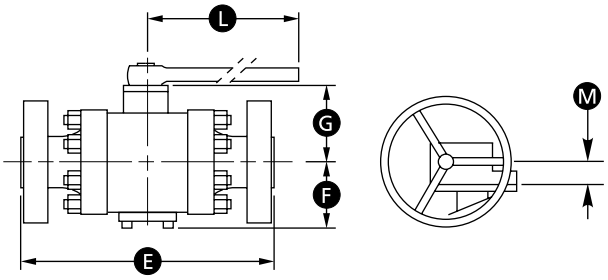

ASME CLASS 150

SIZE in. (mm)	D	E WE	E RF	E RTJ	F	G	S	H	L	A	K	M	WEIGHT lb (kg) WE	WEIGHT lb (kg) RF/RTJ
1-1/2 (40)	1-1/2 (38)	7-1/2 (191)	6-1/2 (165)	7 (178)	3-7/8 (98)	4-1/4 (108)	5 (127)	7/8 (22)	10-3/4 (273)	-	-	-	29 (13)	31 (14)
2 x 1-1/2 x 2 (50 x 40 x 50)	1-1/2 (38)	8-1/2 (216)	7 (178)	7-1/2 (191)	3-7/8 (98)	4-1/4 (108)	5 (127)	7/8 (22)	10-3/4 (273)	-	-	-	31 (14)	40 (18)
2 (50)	2 (51)	8-1/2 (216)	7 (178)	7-1/2 (191)	4-1/8 (105)	4-5/8 (118)	5-5/8 (143)	7/8 (22)	12-5/8 (321)	-	-	-	37 (17)	51 (23)
3 x 2 x 3 (80 x 50 x 80)	2 (51)	11-1/8 (283)	8 (203)	8-1/2 (216)	4-1/8 (105)	4-5/8 (118)	5-5/8 (143)	7/8 (22)	12-5/8 (321)	-	-	-	53 (24)	60 (27)
3 (80)	3 (76)	11-1/8 (283)	8 (203)	8-1/2 (216)	5-1/8 (130)	5-5/8 (143)	7-3/4 (197)	1-1/8 (28)	16-1/2 (419)	-	-	-	84 (38)	95 (43)
4 x 3 x 4 (100 x 80 x 100)	3 (76)	12 (305)	9 (229)	9-1/2 (241)	5-1/8 (130)	5-5/8 (143)	7-3/4 (197)	1-1/8 (28)	16-1/2 (419)	-	-	-	86 (39)	104 (47)
4 (100)	4 (102)	12 (305)	9 (229)	9-1/2 (241)	6-1/8 (155)	6-5/8 (168)	9-3/8 (238)	1-1/8 (28)	20-1/4 (514)	-	-	-	123 (56)	146 (66)
6 x 4 x 6 (150 x 100 x 150)	4 (102)	18 (457)	15-1/2 (394)	16 (406)	6-1/8 (155)	6-5/8 (168)	9-3/8 (238)	1-1/8 (28)	20-1/4 (514)	-	-	-	152 (69)	161 (73)

ASME CLASS 300

SIZE in. (mm)	D	E WE	E RF	E RTJ	F	G	S	H	L	A	K	M	WEIGHT lb (kg) WE	WEIGHT lb (kg) RF/RTJ
1-1/2 (40)	1-1/2 (38)	7-1/2 (191)	7-1/2 (191)	8 (203)	3-7/8 (98)	4-1/4 (108)	5 (127)	7/8 (22)	10-3/4 (273)	-	-	-	29 (13)	40 (18)
2 x 1-1/2 x 2 (50 x 40 x 50)	1-1/2 (38)	8-1/2 (216)	8-1/2 (216)	9-1/8 (232)	3-7/8 (98)	4-1/4 (108)	5 (127)	7/8 (22)	10-3/4 (273)	-	-	-	31 (14)	44 (20)
2 (50)	2 (51)	8-1/2 (216)	8-1/2 (216)	9-1/8 (232)	4-1/8 (105)	4-5/8 (118)	5-5/8 (143)	7/8 (22)	14-5/8 (372)	-	-	-	37 (17)	51 (23)
3 x 2 x 3 (80 x 50 x 80)	2 (51)	11-1/8 (283)	11-1/8 (283)	11-3/4 (298)	4-1/8 (105)	4-5/8 (118)	5-5/8 (143)	7/8 (22)	14-5/8 (372)	-	-	-	53 (24)	75 (34)
3 (80)	3 (76)	11-1/8 (283)	11-1/8 (283)	11-3/4 (298)	5-1/8 (130)	5-5/8 (143)	7-3/4 (197)	1-1/8 (28)	22-3/8 (568)	-	-	-	88 (40)	117 (53)
4 x 3 x 4 (100 x 80 x 100)	3 (76)	12 (305)	12 (305)	12-5/8 (321)	5-1/8 (130)	5-5/8 (143)	7-3/4 (197)	1-1/8 (28)	22-3/8 (568)	-	-	-	90 (41)	123 (56)
4 (100)	4 (102)	12 (305)	12 (305)	12-5/8 (321)	6-1/8 (155)	6-5/8 (168)	9-3/8 (238)	1-1/8 (28)	26-1/8 (664)	-	-	-	128 (58)	170 (77)
6 x 4 x 6 (150 x 100 x 150)	4 (102)	18 (457)	15-7/8 (403)	16-1/2 (419)	6-1/8 (155)	6-5/8 (168)	9-3/8 (238)	1-1/8 (28)	26-1/8 (664)	-	-	-	165 (75)	223 (101)

Flanges in accordance with ASME B16.5
Shaded bore sizes (D) according to API 6D
Shaded end-to-end dimensions (E) according to API 6D

Butt welding ends according to ASME B16.25
Outlined end-to-end dimensions (E) according to ASME B16.10

DIMENSIONS AND WEIGHTS (continued)

ASME CLASS 400

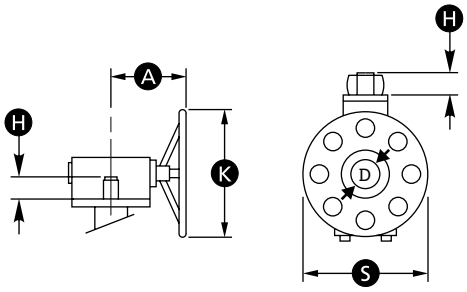

ASME CLASS 600

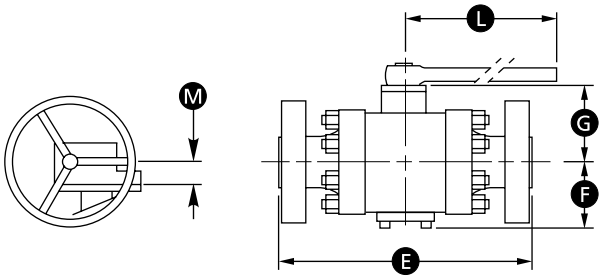

ASME CLASS 400

SIZE in. (mm)	D	E WE	E RF	E RTJ	F	G	S	H	L	A	K	M	WEIGHT WE	WEIGHT lb (kg) RF/RTJ
1-1/2 (40)	1-1/2 (38)	9-1/2 (241)	9-1/2 (241)	9-1/2 (241)	3-7/8 (98)	4-1/4 (108)	5 (127)	7/8 (22)	10-3/4 (273)	-	-	-	30 (13)	43 (20)
2 x 1-1/2 x 2 (50 x 40 x 50)	1-1/2 (38)	11-1/2 (292)	11-1/2 (292)	11-5/8 (295)	3-7/8 (98)	4-1/4 (108)	5 (127)	7/8 (22)	10-3/4 (273)	-	-	-	33 (15)	49 (22)
2 (50)	2 (51)	11-1/2 (292)	11-1/2 (292)	11-5/8 (295)	4-1/8 (105)	4-5/8 (118)	5-5/8 (143)	7/8 (22)	14-5/8 (372)	-	-	-	41 (19)	56 (25)
3 x 2 x 3 (80 x 50 x 80)	2 (51)	14 (356)	14 (356)	14-1/8 (359)	4-1/8 (105)	4-5/8 (118)	5-5/8 (143)	7/8 (22)	14-5/8 (372)	-	-	-	56 (25)	80 (36)
3 (80)	3 (76)	14 (356)	14 (356)	14-1/8 (359)	5-1/8 (130)	5-5/8 (143)	7-3/4 (197)	1-1/8 (28)	22-3/8 (568)	-	-	-	93 (42)	123 (56)
4 x 3 x 4 (100 x 80 x 100)	3 (76)	16 (406)	16 (406)	16-1/8 (410)	5-1/8 (130)	5-5/8 (143)	7-3/4 (197)	1-1/8 (28)	22-3/8 (568)	-	-	-	103 (47)	146 (47)
4 (100)	4 (102)	16 (406)	16 (406)	16-1/8 (410)	6-1/8 (155)	6-5/8 (168)	9-3/8 (238)	1-1/8 (28)	26-1/8 (664)	-	-	-	146 (66)	198 (90)
6 x 4 x 6 (150 x 100 x 150)	4 (102)	19-1/2 (495)	19-1/2 (495)	19-5/8 (499)	6-1/8 (155)	6-5/8 (168)	9-3/8 (238)	1-1/8 (28)	26-1/8 (664)	-	-	-	179 (81)	279 (127)

ASME CLASS 600

SIZE in. (mm)	D	E WE	E RF	E RTJ	F	G	S	H	L	A	K	M	WEIGHT WE	WEIGHT lb (kg) RF/RTJ
1-1/2 (40)	1-1/2 (38)	9-1/2 (241)	9-1/2 (241)	9-1/2 (241)	3-7/8 (98)	4-1/4 (108)	5 (127)	7/8 (22)	11-7/8 (302)	-	-	-	31 (14)	46 (21)
2 x 1-1/2 x 2 (50 x 40 x 50)	1-1/2 (38)	11-1/2 (292)	11-1/2 (292)	11-5/8 (295)	3-7/8 (98)	4-1/4 (108)	5 (127)	7/8 (22)	11-7/8 (302)	-	-	-	35 (16)	53 (24)
2 (50)	2 (51)	11-1/2 (292)	11-1/2 (292)	11-5/8 (295)	4-1/8 (105)	4-5/8 (118)	5-5/8 (143)	7/8 (22)	16-7/8 (429)	-	-	-	44 (20)	62 (28)
3 x 2 x 3 (80 x 50 x 80)	2 (51)	14 (356)	14 (356)	14-1/8 (359)	4-1/8 (105)	4-5/8 (118)	5-5/8 (143)	7/8 (22)	16-7/8 (429)	-	-	-	60 (27)	86 (39)
3 (80)	3 (76)	14 (356)	14 (356)	14-1/8 (359)	5-1/8 (130)	5-5/8 (143)	7-3/4 (197)	1-1/8 (28)	26-1/4 (667)	-	-	-	97 (44)	130 (59)
4 x 3 x 4 (100 x 80 x 100)	3 (76)	17 (432)	17 (432)	17-1/8 (435)	5-1/8 (130)	5-5/8 (143)	7-3/4 (197)	1-1/8 (28)	26-1/4 (667)	-	-	-	115 (52)	168 (76)
4 (100)	4 (102)	17 (432)	17 (432)	17-1/8 435)	6-1/8 (155)	6-5/8 (168)	9-3/8 (238)	1-1/8 (28)	30-1/8 (765)	-	-	-	192 (87)	335 (152)
6 x 4 x 6 (150 x 100 x 150)	4 (102)	22 (559)	22 (559)	22-1/8 (562)	6-1/8 (155)	6-5/8 (168)	9-3/8 (238)	1-1/8 (28)	30-1/8 (765)	-	-	-	192 (87)	335 (152)

Flanges in accordance with ASME B16.5
Shaded bore sizes (D) according to API 6D
Shaded end-to-end dimensions (E) according to API 6D

Butt welding ends according to ASME B16.25
Outlined end-to-end dimensions (E) according to ASME B16.10

ASME CLASS 900 AND 1500

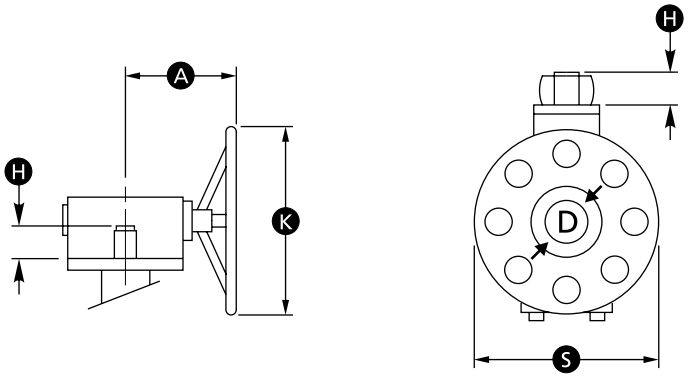

ASME CLASS 900

SIZE in. (mm)	D	E WE	E RF	E RTJ	F	G	S	H	L	A	K	M	WEIGHT WE	WEIGHT lb (kg) RF/RTJ
1-1/2 (40)	1-1/2 (38)	12 (305)	12 (305)	12 (305)	4 (102)	4-1/2 (114)	5-1/8 (130)	7/8 (22)	13-1/2 (343)	- -	- -	- -	44 (20)	68 (31)
2 x 1-1/2 x 2 (50 x 40 x 50)	1-1/2 (38)	14-1/2 (368)	14-1/2 (368)	14-5/8 (372)	4 (102)	4-1/2 (114)	5-1/8 (130)	7/8 (22)	13-1/2 (343)	- -	- -	- -	49 (22)	95 (43)
2 (50)	2 (51)	14-1/2 (368)	14-1/2 (368)	14-5/8 (372)	4-1/2 (114)	4-7/8 (124)	6-3/8 (162)	7/8 (22)	22 (559)	- -	- -	- -	77 (35)	130 (59)
3 x 2 x 3 (80 x 50 x 80)	2 (51)	15 (381)	15 (381)	15-1/8 (359)	4-1/2 (114)	4-7/8 (124)	6-3/8 (162)	7/8 (22)	22 (559)	- -	- -	- -	108 (49)	143 (65)
3 (80)	3 (76)	15 (381)	15 (381)	15-1/8 (359)	5-5/8 (143)	6-1/8 (156)	8-3/8 (213)	1-1/8 (28)	35-7/8 (911)	- -	- -	- -	157 (71)	187 (85)
4 x 3 x 4 (100 x 80 x 100)	3 (76)	18 (457)	18 (457)	18-1/8 (460)	5-5/8 (143)	6-1/8 (156)	8-3/8 (213)	1-1/8 (28)	35-7/8 (911)	- -	- -	- -	159 (72)	240 (109)
4 (100)	4 (102)	18 (457)	18 (457)	18-1/8 (460)	6-7/8 (175)	7-1/2 (191)	11-1/2 (292)	2-1/8 (54)	- -	10-7/8 (276)	23-5/8 (600)	1-3/4 (44)	353 (160)	390 (177)
6 x 4 x 6 (150 x 100 x 150)	4 (102)	24 (610)	24 (610)	24-1/8 (613)	6-7/8 (175)	7-1/2 (191)	10-1/4 (260)	2-1/8 (54)	- -	10-7/8 (276)	23-5/8 (600)	1-3/4 (44)	357 (162)	489 (222)

ASME CLASS 1500

SIZE in. (mm)	D	E WE	E RF	E RTJ	F	G	S	H	L	A	K	M	WEIGHT WE	WEIGHT lb (kg) RF/RTJ
1-1/2 (40)	1-1/2 (38)	12 (305)	12 (305)	12 (305)	4 (102)	4-1/2 (114)	5-1/8 (130)	7/8 (22)	15-7/8 (403)	- -	- -	- -	44 (20)	68 (31)
2 x 1-1/2 x 2 (50 x 40 x 50)	1-1/2 (38)	14-1/2 (368)	14-1/2 (368)	14-5/8 (372)	4 (102)	4-1/2 (114)	5-1/8 (130)	7/8 (22)	15-7/8 (403)	- -	- -	- -	49 (22)	95 (43)
2 (50)	2 (51)	14-1/2 (368)	14-1/2 (368)	14-5/8 (372)	4-1/2 (114)	4-7/8 (124)	6-3/8 (162)	7/8 (22)	24-1/4 (616)	- -	- -	- -	77 (35)	130 (59)
3 x 2 x 3 (80 x 50 x 80)	2 (51)	18-1/2 (470)	18-1/2 (470)	18-5/8 (473)	4-1/2 (114)	4-7/8 (124)	6-3/8 (162)	7/8 (22)	24-1/4 (616)	- -	- -	- -	108 (49)	168 (76)
3 (80)	3 (76)	18-1/2 (470)	18-1/2 (470)	18-5/8 (473)	5-5/8 (143)	6-1/8 (156)	8-3/8 (213)	2-1/8 (54)	- -	6-3/4 (171)	11-3/4 (298)	1-1/4 (32)	179 (81)	240 (109)
4 x 3 x 4 (100 x 80 x 100)	3 (76)	21-1/2 (546)	21-1/2 (546)	21-5/8 (549)	5-5/8 (143)	6-1/8 (156)	8-3/8 (213)	2-1/8 (54)	- -	6-3/4 (171)	11-3/4 (298)	1-1/4 (32)	185 (84)	311 (141)
4 (100)	4 (102)	21-1/2 (546)	21-1/2 (546)	21-5/8 (549)	6-7/8 (175)	7-1/2 (191)	12-1/4 (311)	2-1/8 (54)	- -	10-7/8 (276)	23-5/8 (600)	1-3/4 (44)	355 (161)	399 (181)
6 x 4 x 6 (150 x 100 x 150)	4 (102)	27-3/4 (705)	27-3/4 (705)	28 (711)	6-7/8 (175)	7-1/2 (191)	10-1/4 (260)	2-1/8 (54)	- -	10-7/8 (276)	23-5/8 (600)	1-3/4 (44)	366 (166)	628 (285)

Flanges in accordance with ASME B16.5
Shaded bore sizes (D) according to API 6D
Shaded end-to-end dimensions (E) according to API 6D

Butt welding ends according to ASME B16.25
Outlined end-to-end dimensions (E) according to ASME B16.10

GROVE B5
DESIGN FEATURES

Standard Features

- Double-barrier stem seals
- Stem separated from the ball; anti-blowout design; no side load on the stem
- Bearing blocks adsorb the pressure load on the ball
- Primary metal-to-metal seal and secondary protected synthetic O-ring seal
- Double-sealing barrier in both directions (DPE)
- Body relief valve for overpressure due to liquid thermal expansion
- Built-in sealant injection system for emergency seat seal
- Metal-backed, self-lubricating PTFE sleeve bearing and thrust washers reduce torque and extend service life
- Nickel plating for trim parts
- Trunnion mounted ball for ease of operation at high pressure
- Large-diameter, short coupled trunnions to reduce unit bearing loads and operating torque
- Bolted construction permits disassembly on job site for repairs
- Integral stop in the adapter plate for a permanent reference to open and closed position
- Antistatic device

Features Upon Request

- Triple-barrier stem seals
- Emergency grease fitting for stem
- Self-relieving seats
- Plastic polymer O-ring or insert for primary seat sealing
- Double block-and-bleed
- PTFE various grades of reinforced gaskets, spring energized, for stem and seat sealing
- Metal-to-metal seat
- Explosive decompression-resistant seal





Body Construction

The body is made of three forged parts, and the bolted construction allows disassembly on the job site for repairs. The bolts threads areas are per ISO metric or ASME imperial, depending on the market request. The tightening of the bolts is made by hydraulic tools with a predetermined torque. The body drain is located in the lowest part of the body cavity and consists of an NPT drain valve with safety plug.

Stem Construction

The stem of the GROVE B5 valves is separated from the ball and is connected to the upper ball trunnion by steel pins. Bearing blocks are located on the upper and lower ball trunnions, which absorb all the pressure load on the ball.

The stem is a free member and carries no side thrust.The absence of this side load and friction drag on the stem ensures lower operating torque and long service life.

The stem is sealed by means of two O-rings. If leakage should ever occur through both stem seals, the outer O-ring can be replaced with the valve in the line, under pressure with the ball in the closed position. With no pressure in-line, it is possible to remove the gland plate for replacement of both primary and outer stem O-rings. The stem also can be removed and replaced if necessary.

Torque

Cameron's GROVE B5 valve's low operating torque is due to a combination of factors:

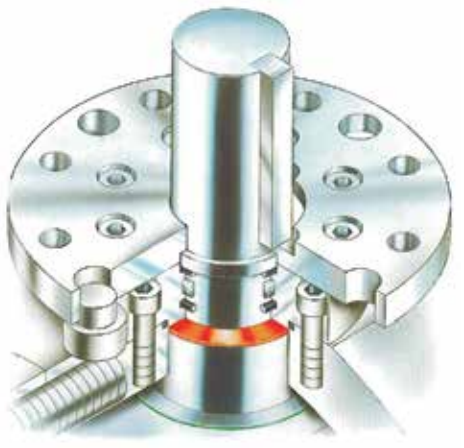

- The design of the stem, which is separated from the ball
- The side loads, brought on by differential pressure, are absorbed by two (upper and lower) rigid bearing retainers and large-diameter, short coupled trunnions to reduce unit bearing loads
- The metal-backed, self-lubricating sleeve bearing and the thrust washers reduce the torque and extend service life

Ball Position

The ball's open and closed positions are ensured by corresponding stops on the adapter plate.

The valve normally is mounted with the actuator stops or the gear stops set at the factory as primary stops. An "open/closed" indicator also is provided.





Seat Seals

The GROVE B5 seat design ensures double-barrier sealing in both directions (the normal self-relieving seats are a simple barrier of sealing). The sealing is performed by both a primary metal-to-metal seal and a secondary protected O-ring seal.

Double Piston Effect

The (DPE) seat design was invented and patented by Cameron's GROVE brand. The DPE seat design allows for both seats to seal with pressure acting from the same side of the valve. In the event one seat becomes damaged, the user has the added advantage of the opposite seat sealing. By means of this double barrier, the sealing is ensured regardless of the direction of the flow through the valve.

If the upstream seat (1) becomes damaged and leaks, the pressure entering the body cavity acts on the downstream seat (2), sealing the downstream seat tightly against the ball.

Note: The DPE feature and the double block-and-bleed feature are not to be confused with one another.

The initial seal, at extremely low pressure differential or vacuum conditions, is obtained with spring-loaded floating seats, which are free to move slightly along the longitudinal axis of the valve. Line pressure behind the seat ring supplements the seat spring load to force the seat tightly against the ball.

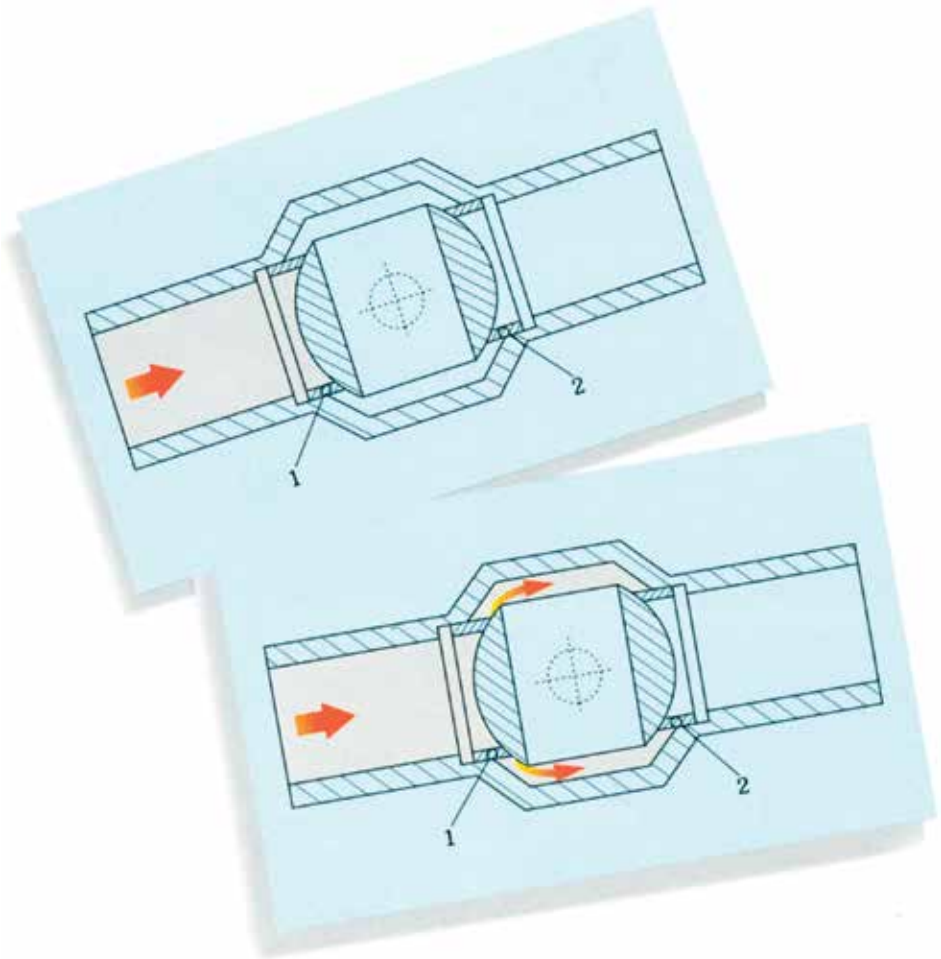

VALVE ASSEMBLY AND CROSS SECTION

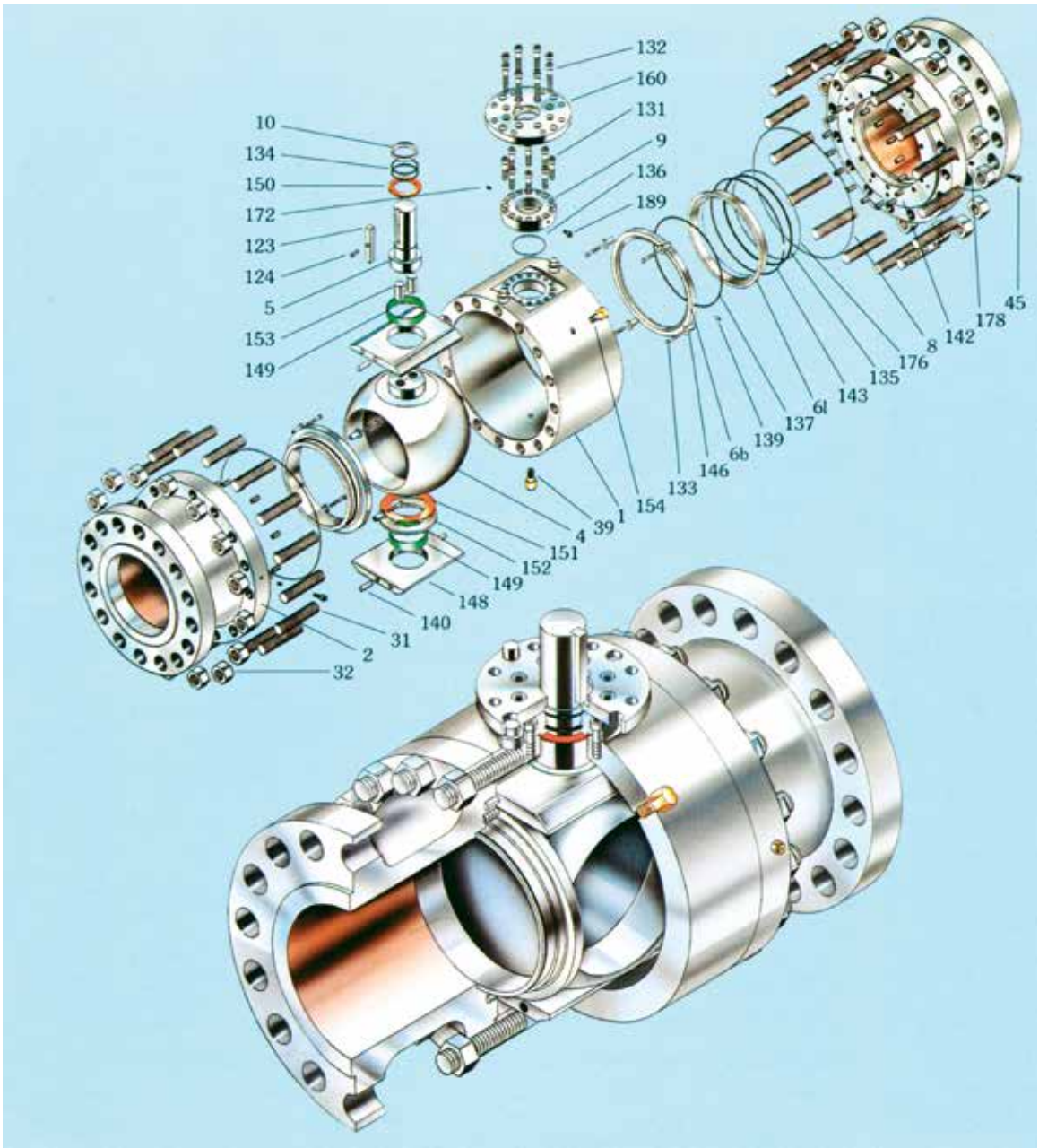

Item	Description	Item	Description	Item	Description
1	Body	45	Grease Fitting	146	Puller Bushing
2	Closure	123	Stem Key	148	Bearing Retainer
4	Ball	124	Stem Key Capscrew	149	Bearing
5	Stem	131	Gland Plate Capscrew	150	Upper Thrust Washer
6b	Outer Seat Ring	132	Adapter Plate Capscrew	151	Lower Thrust Washer
6l	Inner Seat Ring	134	Stem O-ring	152	Spacer
8	Body O-ring	135	Seat O-ring	153	Drive Pin
9	Gland Plate	136	Gland Plate O-ring	154	Relief Valve
10	Gland Bushing	137	Seal O-ring	160	Adapter Plate
31	Body Stud	139	Seat Spring Pin	172	Vent Plug
32	Body Stud Nut	140	Bearing Retainer Pin	176	U-cup Packing
39	Drain Valve	142	Spring	178	Check Valve
		143	Seat Lock Ring	189	Gland Vent

DIMENSIONS AND WEIGHTS

ASME CLASS 150

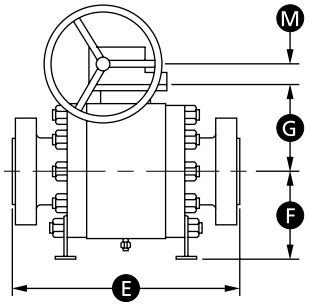

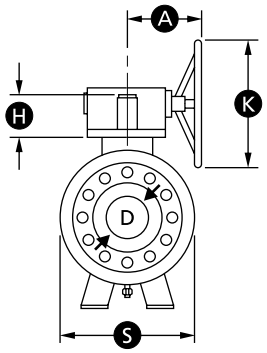

ASME CLASS 150

SIZE in. (mm)	D	E WE	E RF	E RTJ	F	G	S	H	L	A	K	M	WEIGHT WE	lb (kg) RF/RTJ
6 (150)	6 (152)	18 457)	15-1/2 (394)	16 (406)	11-7/8 (302)	8-1/2 (108)	11-7/8 (302)	2-3/4 (70)	- -	8-3/4 (222)	13-3/4 (349)	2-5/8 (67)	440 (200)	520 (236)
8 (200)	8 (203)	20-1/2 (521)	18 (457)	18-1/2 (470)	13-3/8 (340)	9-7/8 (108)	15-5/8 (397)	2-3/4 (70)	- -	8-3/4 (222)	13-3/4 (349)	2-5/8 (67)	720 (327)	850 (386)
10 (250)	10 (254)	22 (559)	21 (533)	21-1/2 (546)	14-7/8 (378)	11-5/8 (118)	18-1/4 (464)	2-3/4 (70)	- -	8-3/4 (222)	13-3/4 (349)	2-5/8 (67)	1050 (476)	1250 (567)
12 (300)	12 (305)	25 (635)	24 (610)	24-1/2 (622)	16-3/8 (416)	13-1/2 (118)	21-5/8 (549)	2-3/4 (70)	- -	8-3/4 (222)	13-3/4 (349)	2-5/8 (67)	1450 (658)	1740 (789)
14 (350)	13-1/4 (337)	30 (762)	27 (686)	27-1/2 (699)	18-3/8 (467)	14-5/8 (143)	23 (584)	3-3/4 (95)	- -	11-1/2 (292)	13-3/4 (349)	3 (76)	1800 (816)	2160 (980)
16 (400)	15-1/4 (387)	33 (838)	30 (762)	30-1/2 (775)	19-7/8 (505)	16-1/4 (143)	26-3/8 (670)	3-3/4 (95)	- -	11-1/2 (292)	13-3/4 (349)	3 (76)	2160 (980)	2570 (1166)
18 (450)	17-1/4 (438)	36 (914)	34 (864)	34-1/2 (876)	21-1/2 (546)	18 (168)	29-7/8 (759)	4-1/2 (114)	- -	11-1/2 (292)	13-3/4 (349)	3 (76)	3020 (1370)	3610 (1637)
20 (500)	19-1/4 (489)	39 (991)	36 (914)	36-1/2 (927)	23-1/8 (587)	19-3/8 (168)	32-7/8 (835)	4-1/2 (114)	- -	11-1/2 (292)	13-3/4 (349)	3 (76)	4050 (1837)	4850 (2200)
22 (550)	21-1/4 (540)	(1)	(1)	(1)	24-7/8 (632)	21-1/8 (537)	36-1/4 (921)	4-1/2 (114)	- -	15-3/4 (400)	23-5/8 (600)	4-3/8 (111)	5020 (2277)	6010 (2726)
24 (600)	23-1/4 (591)	45 (1143)	42 (1067)	42-1/2 (1080)	26-3/8 (670)	22-1/2 (572)	38-7/8 (988)	7-1/8 (181)	- -	21-5/8 (549)	31-1/2 (800)	4-3/8 (111)	6010 (2726)	7200 (3266)
26 (650)	25 (635)	49 (1245)	45 (1143)	(1)	28-1/4 (718)	24-1/2 (622)	41-3/4 (1060)	7-1/8 (181)	- -	21-5/8 (549)	31-1/2 (800)	4-3/8 (111)	7600 (3447)	9120 (4137)
28 (700)	27 (686)	53 (1346)	49 (1245)	(1)	29-5/8 (753)	25-7/8 (657)	44-3/4 (1137)	7-1/8 (181)	- -	21-5/8 (549)	31-1/2 (800)	4-3/8 (111)	8700 (3946)	10440 (4736)
30 (750)	29 (737)	55 (1397)	51 (1295)	(1)	31-3/4 (806)	27-1/2 (699)	48-5/8 (1235)	7-1/8 (181)	- -	21-5/8 (549)	31-1/2 (800)	4-3/8 (111)	10,420 (4726)	12,500 (5670)
32 (800)	30-3/4 (781)	60 (1524)	54 (1372)	(1)	33-1/4 (845)	29 (737)	51 (1295)	8-1/8 (206)	- -	21-5/8 (549)	23-5/8 (600)	5-3/8 (137)	11,860 (5380)	14,210 (6446)
34 (850)	32-3/4 (832)	64 (1626)	58 (1473)	(1)	34-3/8 (873)	30-7/8 (784)	53-3/8 (1356)	8-1/8 (206)	- -	21-3/4 (552)	23-5/8 (600)	5-3/8 (137)	14,500 (6577)	17,390 (7888)
36 (900)	34-1/2 (876)	68 (1727)	60 (1524)	(1)	35-3/4 (908)	32-3/8 (822)	56-3/4 (1441)	8-1/8 (206)	- -	21-3/4 (552)	23-5/8 (600)	5-3/8 (137)	16,880 (7657)	20,260 (9190)
40 (1000)	38-1/2 (978)	(1)	(1)	(1)	39-3/8 (1000)	35-5/8 (905)	63-7/8 (1623)	8-1/8 (206)	- -	21-3/4 (552)	23-5/8 (600)	5-3/8 (137)	21,560 (9779)	25,850 (11,725)
42 (1050)	40-1/4 (1022)	(1)	(1)	(1)	40-3/4 (1035)	38-1/8 (968)	67-3/8 (1711)	8-1/8 (206)	- -	21-3/4 (552)	23-5/8 (600)	5-3/8 (137)	25,390 (11,517)	30,460 (13,816)
46 (1150)	44 (1118)	(1)	(1)	(1)	44-5/8 (1134)	42-1/2 (1080)	74-1/2 (1892)	8-1/8 (206)	- -	22-7/8 (581)	23-5/8 (600)	6-1/4 (159)	30,860 (13,998)	37030 (16,797)
48 (1200)	46 (1168)	(1)	(1)	(1)	46-3/8 (1178)	44-3/8 (1127)	77-1/2 (1969)	8-1/8 (206)	- -	22-7/8 (581)	23-5/8 (600)	6-1/4 (159)	35270 (15,998)	42320 (19,196)
56 (1400)	54-1/2 (1384)	(1)	(1)	(1)	52-3/4 (1321)	50-3/8 (1280)	89-3/4 (2280)	9-5/8 (245)	- -	-	-	-	54010 (24,499)	64810 (29,397)
60 (1500)	57-1/2 (1461)	(1)	(1)	(1)	56-3/8 (1432)	55-1/8 (1400)	96-3/8 (2448)	9-5/8 (245)	- -	-	-	-	66130 (29,996)	79,360 (35,997)

(1) Upon request

Flanges in accordance with ASME B16.5

Shaded bore sizes (D) according to API 6D
Shaded end-to-end dimensions (E) according to API 6D
Butt welding ends according to ASME B16.25

Larger sizes available on request
Reduced-bore valves also available

ASME CLASS 300

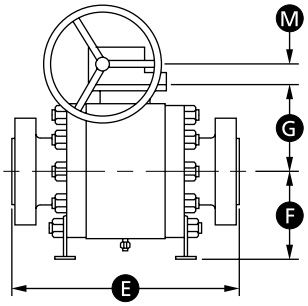

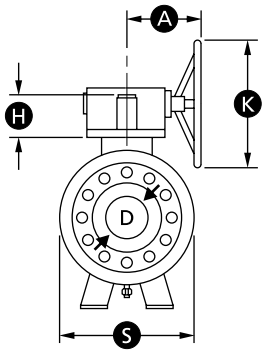

ASME CLASS 300

SIZE in. (mm)	D	E WE	E RF	E RTJ	F	G	S	H	L	A	K	M	WEIGHT WE	lb (kg) RF/RTJ
6 (150)	6 (152)	18 (457)	15-7/8 (403)	16-1/2 (419)	11-7/8 (302)	8-1/2 (108)	12 (305)	2-3/4 (70)	-	8-3/4 (222)	13-3/4 (349)	2-5/8 (67)	460 (209)	550 (249)
8 (200)	8 (203)	20-1/2 (521)	19-3/4 (502)	20-3/8 (518)	13-3/8 (340)	9-7/8 (108)	15-7/8 (403)	2-3/4 (70)	-	8-3/4 (222)	13-3/4 (349)	2-5/8 (67)	740 (336)	880 (399)
10 (250)	10 (254)	22 (559)	22-3/8 (568)	23 (584)	14-7/8 (378)	11-5/8 (118)	18-3/8 (467)	3-3/4 (95)	-	11-1/2 (292)	13-3/4 (349)	3 (76)	1100 (499)	1320 (599)
12 (300)	12 (305)	25 (635)	25-1/2 (648)	26-1/8 (664)	16-3/8 (416)	13-1/2 (118)	21-3/4 (552)	3-3/4 (95)	-	11-1/2 (222)	13-3/4 (349)	3 (67)	1520 (689)	1800 (816)
14 (350)	13-1/4 (337)	30 (762)	30 (762)	30-5/8 (778)	18-3/8 (467)	14-5/8 (143)	23-1/4 (591)	4-1/2 (114)	-	11-1/2 (292)	13-3/4 (349)	3 (76)	1890 (857)	2270 (1030)
16 (400)	15-1/4 (387)	33 (838)	33 (838)	33-5/8 (854)	19-7/8 (505)	16-1/4 (143)	26-3/4 (679)	4-1/2 (114)	-	11-1/2 (292)	13-3/4 (349)	3 (76)	2240 (1016)	2680 (1216)
18 (450)	17-1/4 (438)	36 (914)	36 (914)	36-5/8 (930)	21-1/2 (546)	18 (168)	30-1/4 (768)	4-1/2 (114)	-	15-3/4 (400)	23-5/8 (600)	4-3/8 (111)	3150 (1429)	3760 (1706)
20 (500)	19-1/4 (489)	39 (991)	39 (991)	39-3/4 (1010)	23-1/8 (587)	16-7/8 (429)	33-1/4 (845)	7-1/8 (181)	-	21-5/8 (549)	31-1/2 (800)	4-3/8 (111)	4250 (1928)	5090 (2309)
22 (550)	21-1/4 (540)	43 (1092)	43 (1092)	43-7/8 (1115)	24-7/8 (632)	21-1/8 (537)	36-5/8 (930)	7-1/8 (181)	-	21-5/8 (549)	31-1/2 (800)	4-3/8 (111)	5260 (2386)	6300 (2858)
24 (600)	23-1/4 (591)	45 (1143)	45 (1143)	45-7/8 (1165)	26-3/8 (670)	22-1/2 (572)	39-1/4 (997)	7-1/8 (181)	-	21-5/8 (549)	31-1/2 (800)	4-3/8 (111)	6300 (2858)	7560 (3429)
26 (650)	25 (635)	49 (1245)	49 (1245)	50 (1270)	28-1/4 (718)	24-1/2 (622)	42-1/8 (1070)	8-1/8 (206)	-	21-3/4 (552)	23-5/8 (600)	5-3/8 (137)	7980 (3620)	9560 (4336)
28 (700)	27 (686)	53 (1346)	53 (1346)	54 (1372)	29-5/8 (753)	25-7/8 (657)	45-1/4 (1149)	8-1/8 (206)	-	21-3/4 (552)	23-5/8 (600)	5-3/8 (137)	9120 (4137)	10,930 (4958)
30 (750)	29 (737)	55 (1397)	55 (1397)	56 (1422)	31-3/4 (806)	27-1/2 (699)	49-1/8 (1248)	8-1/8 (206)	-	21-3/4 (552)	23-5/8 (600)	5-3/8 (137)	10,930 (4958)	13,110 (5947)
32 (800)	30-3/4 (781)	60 (1524)	60 (1524)	61-1/8 (1553)	33-1/4 (845)	29 (737)	51-1/2 (1308)	8-1/8 (206)	-	21-3/4 (552)	23-5/8 (600)	5-3/8 (137)	12,430 (5638)	14,900 (6759)
34 (850)	32-3/4 (832)	64 (1626)	64 (1626)	65-1/8 (1654)	34-3/8 (873)	30-7/8 (784)	53-7/8 (1369)	8-1/8 (206)	-	21-3/4 (552)	23-5/8 (600)	5-3/8 (137)	15,210 (6899)	18,250 (8278)
36 (900)	34-1/2 (876)	68 (1727)	68 (1727)	69-1/8 (1756)	35-3/4 (908)	32-3/8 (822)	57-3/8 (1457)	8-1/8 (206)	-	22-7/8 (581)	23-5/8 (600)	6-1/4 (159)	17,720 (8038)	21,250 (9639)
40 (1000)	38-1/2 (978)	(1)	(1)	(1)	39-3/8 (1000)	35-5/8 (905)	64-1/2 (1638)	8-1/8 (206)	-	22-7/8 (581)	23-5/8 (600)	6-1/4 (159)	22,610 (10,256)	27,130 (12,306)
42 (1050)	40-1/4 (1022)	(1)	(1)	(1)	40-3/4 (1035)	38-1/8 (968)	68-1/8 (1730)	9-5/8 (245)	-	22-7/8 (581)	23-5/8 (600)	6-1/4 (159)	26,650 (12,088)	31,960 (14,497)
46 (1150)	44 (1118)	(1)	(1)	(1)	44-5/8 (1134)	42-1/2 (1080)	75-1/4 (1911)	9-5/8 (245)	-	22-7/8 (581)	23-5/8 (600)	6-1/4 (159)	32,400 (14,696)	38,880 (17,636)
48 (1200)	46 (1168)	(1)	(1)	(1)	46-3/8 (1178)	44-3/8 (1127)	78-1/4 (1988)	9-5/8 (245)	-	25-5/8 (651)	47-1/4 (1200)	6-5/8 (168)	37,030 (16,797)	44,440 (20,158)
56 (1400)	54-1/2 (1384)	(1)	(1)	(1)	52-3/4 (1321)	50-3/8 (1280)	90-3/4 (2305)	9-5/8 (245)	-	-	-	-	56,700 (25,719)	68,030 (30,858)
60 (1500)	57-1/2 (1461)	(1)	(1)	(1)	56-3/8 (1432)	55-1/8 (1400)	97-1/2 (2477)	9-5/8 (245)	-	-	-	-	69,440 (31,497)	83,330 (37,798)

(1) Upon request

Flanges in accordance with ASME B16.5

Shaded bore sizes (D) according to API 6D
Shaded end-to-end dimensions (E) according to API 6D

Butt welding ends according to ASME B16.25

DIMENSIONS AND WEIGHTS (continued)

ASME CLASS 400

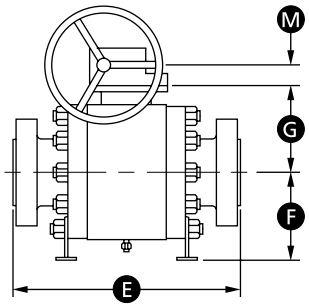

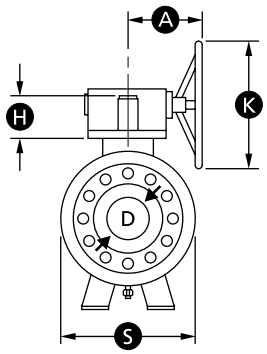

ASME CLASS 400

SIZE in. (mm)	D	E WE	E RF	E RTJ	F	G	S	H	L	A	K	M	WEIGHT lb (kg) WE	WEIGHT lb (kg) RF/RTJ
6 (150)	6 (152)	19-1/2 (495)	19-1/2 (495)	19-5/8 (499)	12-1/8 (308)	8-1/2 (108)	12-1/8 (308)	2-3/4 (70)	-	8-3/4 (222)	13-3/4 (349)	2-5/8 (67)	520 (236)	610 (277)
8 (200)	8 (203)	23-1/2 (597)	23-1/2 (597)	23-5/8 (600)	13-5/8 (346)	9-7/8 (108)	16 (406)	3-3/4 (95)	-	11-1/2 (292)	13-3/4 (349)	3 (76)	850 (386)	1010 (458)
10 (250)	10 (254)	26-1/2 (673)	26-1/2 (673)	26-5/8 (676)	15-1/4 (387)	11-5/8 (118)	18-5/8 (473)	3-3/4 (95)	-	11-1/2 (292)	13-3/4 (349)	3 (76)	1250 (567)	1490 (676)
12 (300)	12 (305)	30 (762)	30 (762)	30-1/8 (765)	16-3/4 (425)	13-1/2 (118)	22 (559)	3-3/4 (95)	-	11-1/2 (292)	13-3/4 (349)	3 (67)	1740 (789)	2070 (939)
14 (350)	13-1/4 (337)	32-1/2 (826)	32-1/2 (826)	32-5/8 (829)	18-3/4 (476)	14-5/8 (143)	23-1/2 (597)	4-1/2 (114)	-	11-1/2 (292)	13-3/4 (349)	3 (76)	2160 (980)	2570 (1166)
16 (400)	15-1/4 (387)	35-1/2 (902)	35-1/2 (902)	35-5/8 (905)	20-3/8 (518)	16-1/4 (143)	27 (686)	4-1/2 (114)	-	11-1/2 (292)	13-3/4 (349)	3 (76)	2570 (1166)	3080 (1397)
18 (450)	17-1/4 (438)	38-1/2 (978)	38-1/2 (978)	38-5/8 (981)	21-7/8 (556)	18 (168)	30-1/2 (775)	7-1/8 (181)	-	21-5/8 (549)	31-1/2 (800)	4-3/8 (111)	3610 (1637)	4320 (1960)
20 (500)	19-1/4 (489)	41-1/2 (1054)	41-1/2 (1054)	41-3/4 (1056)	23-1/2 (597)	19-3/8 (492)	33-1/2 (851)	7-1/8 (181)	-	21-5/8 (549)	31-1/2 (800)	4-3/8 (111)	4870 (2209)	5840 (2649)
22 (550)	21-1/4 (540)	45 (1143)	45 (1143)	45-3/8 (1153)	25-3/8 (645)	21-1/8 (537)	37 (940)	7-1/8 (181)	-	21-5/8 (549)	31-1/2 (800)	4-3/8 (111)	6040 (2740)	7230 (3279)
24 (600)	23-1/4 (591)	48-1/2 (1232)	48-1/2 (1232)	48-7/8 (1242)	26-7/8 (683)	22-1/2 (572)	39-5/8 (1007)	8-1/8 (206)	-	21-3/4 (552)	23-5/8 (600)	5-3/8 (137)	7230 (3279)	8660 (3928)
26 (650)	25 (635)	51-1/2 (1308)	51-1/2 (1308)	51 (1295)	28-7/8 (734)	24-1/2 (622)	42-1/2 (1080)	8-1/8 (206)	-	21-3/4 (552)	23-5/8 (600)	5-3/8 (137)	9170 (4159)	11,000 (4990)
28 (700)	27 (686)	55 (1397)	55 (1397)	55-1/2 (1410)	30-1/4 (768)	25-7/8 (657)	45-5/8 (1159)	8-1/8 (206)	-	21-3/4 (552)	23-5/8 (600)	5-3/8 (137)	10,490 (4758)	12,580 (5706)
30 (750)	29 (737)	60 (1524)	60 (1524)	60-1/2 (1537)	32-3/8 (822)	27-1/2 (699)	49-5/8 (1261)	8-1/8 (206)	-	21-3/4 (552)	23-5/8 (600)	5-3/8 (137)	12,560 (5697)	15,070 (6836)
32 (800)	30-3/4 (781)	65 (1651)	65 (1651)	65-5/8 (1667)	33-7/8 (861)	29 (737)	52 (1321)	8-1/8 (206)	-	22-7/8 (581)	23-5/8 (600)	6-1/4 (159)	14,280 (6477)	17,120 (7766)
34 (850)	32-3/4 (832)	70 (1778)	70 (1778)	70-5/8 (1794)	35-1/8 (892)	30-7/8 (784)	54-1/2 (1384)	8-1/8 (206)	-	22-7/8 (581)	23-5/8 (600)	6-1/4 (159)	17,480 (7929)	20,960 (9507)
36 (900)	34-1/2 (876)	74 (1880)	74 (1880)	74-5/8 (1896)	36-1/2 (927)	32-3/8 (822)	58 (1473)	8-1/8 (206)	-	22-7/8 (581)	23-5/8 (600)	6-1/4 (159)	20,370 (9240)	24,420 (11,077)
40 (1000)	38-1/2 (978)	(1)	(1)	(1)	40-1/8 (1019)	35-5/8 (905)	65-1/8 (1654)	9-5/8 (245)	-	22-7/8 (581)	23-5/8 (600)	6-1/4 (159)	25,990 (11,789)	31,170 (14,138)
42 (1050)	40-1/4 (1022)	(1)	(1)	(1)	41-1/2 (1054)	38-1/8 (968)	68-3/4 (1746)	9-5/8 (245)	-	22-7/8 (581)	23-5/8 (600)	6-1/4 (159)	30,640 (13,898)	36,770 (16,679)
46 (1150)	44 (1118)	(1)	(1)	(1)	45-5/8 (1159)	42-1/2 (1080)	76 (2007)	9-5/8 (245)	-	22-7/8 (581)	23-5/8 (600)	6-1/4 (159)	37,250 (16,896)	44,700 (20,276)
48 (1200)	46 (1168)	(1)	(1)	(1)	47-3/8 (1203)	44-3/8 (1127)	79 (1988)	9-5/8 (245)	-	25-5/8 (651)	47-1/4 (1200)	6-5/8 (168)	42,590 (19,319)	51,100 (23,179)
56 (1400)	54-1/2 (1384)	(1)	(1)	(1)	53-3/4 (1365)	50-3/8 (1280)	91-5/8 (2327)	11 (279)	-	-	-	-	65,180 (29,565)	78,210 (35,475)
60 (1500)	57-1/2 (1461)	(1)	(1)	(1)	57-1/2 (1461)	55-1/8 (1400)	98-3/8 (2499)	11 (279)	-	-	-	-	79,850 (36,219)	95,810 (43,459)

(1) Upon request

Flanges in accordance with ASME B16.5

Shaded bore sizes (D) according to API 6D
Shaded end-to-end dimensions (E) according to API 6D

Butt welding ends according to ASME B16.25

ASME CLASS 600

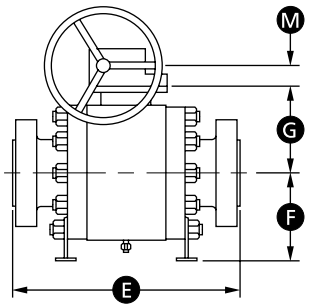

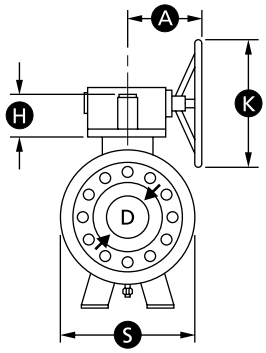

ASME CLASS 600

SIZE in. (mm)	D	E WE	E RF	E RTJ	F	G	S	H	L	A	K	M	WEIGHT lb (kg) WE	WEIGHT lb (kg) RF/RTJ
6 (150)	6 (152)	22 (559)	22 (559)	22-1/8 (562)	12-1/4 (311)	8-1/2 (108)	12-1/4 (311)	2-3/4 (70)	-	8-3/4 (222)	13-3/4 (349)	2-5/8 (67)	570 (259)	680 (308)
8 (200)	8 (203)	26 (660)	26 (660)	26-1/8 (664)	13-3/4 (349)	9-7/8 (108)	16-1/8 (410)	3-3/4 (95)	-	11-1/2 (292)	13-3/4 (349)	3 (76)	920 (417)	1100 (500)
10 (250)	10 (254)	31 (787)	31 (787)	31-1/8 (790)	15-3/8 (391)	11-5/8 (118)	18-7/8 (480)	3-3/4 (95)	-	11-1/2 (292)	13-3/4 (349)	3 (76)	1360 (617)	1630 (739)
12 (300)	12 (305)	33 (838)	33 (838)	33-1/8 (841)	16-7/8 (429)	13-1/2 (118)	22-1/4 (565)	3-3/4 (95)	-	11-1/2 (292)	13-3/4 (349)	3 (67)	1890 (857)	2270 (1030)
14 (350)	13-1/4 (337)	35 (889)	35 (889)	35-1/8 (892)	18-7/8 (480)	14-5/8 (143)	23-3/4 (603)	4-1/2 (114)	-	11-1/2 (292)	13-3/4 (349)	3 (76)	2330 (1057)	2790 (1266)
16 (400)	15-1/4 (387)	39 (991)	39 (991)	39-1/8 (994)	20-1/2 (521)	16-1/4 (143)	27-1/4 (692)	4-1/2 (114)	-	15-3/4 (400)	23-5/8 (600)	4-3/8 (111)	2790 (1266)	3350 (1520)
18 (450)	17-1/4 (438)	43 (1092)	43 (1092)	43-1/8 (1095)	22-1/8 (562)	18 (168)	30-7/8 (784)	7-1/8 (181)	-	21-5/8 (549)	31-1/2 (800)	4-3/8 (111)	3920 (1778)	4690 (2127)
20 (500)	19-1/4 (489)	47 (1194)	47 (1194)	47-1/4 (1200)	23-3/4 (603)	19-3/8 (492)	33-7/8 (861)	7-1/8 (181)	-	21-5/8 (549)	31-1/2 (800)	4-3/8 (111)	5290 (2400)	6340 (2876)
22 (550)	21-1/4 (540)	51 (1295)	51 (1295)	51-3/8 (1305)	25-5/8 (651)	21-1/8 (537)	37-3/8 (949)	8-1/8 (206)		21-5/8 (549)	23-5/8 (600)	5-3/8 (137)	6560 (2976)	7870 (3570)
24 (600)	23-1/4 (591)	55 (1397)	55 (1397)	55-3/8 (1407)	27-1/8 (689)	22-1/2 (572)	40-1/8 (1019)	8-1/8 (206)	-	21-3/4 (552)	23-5/8 (600)	5-3/8 (137)	7870 (3570)	9430 (4277)
26 (650)	25 (635)	57 (1448)	57 (1448)	57-1/2 (1461)	29-1/8 (740)	24-1/2 (622)	43 (1092)	8-1/8 (206)	-	22-7/8 (581)	23-5/8 (600)	6-1/4 (159)	9980 (4527)	11,970 (5430)
28 (700)	27 (686)	61 (1549)	61 (1549)	61-1/2 (1562)	30-1/2 (775)	25-7/8 (657)	46-1/8 (1172)	8-1/8 (206)	-	22-7/8 (581)	23-5/8 (600)	6-1/4 (159)	11,410 (5175)	13,690 (6210)
30 (750)	29 (737)	65 (1651)	65 (1651)	65-1/2 (1664)	32-5/8 (829)	27-1/2 (699)	50-1/8 (1273)	9-5/8 (245)	-	22-7/8 (581)	23-5/8 (600)	6-1/4 (159)	13,690 (6210)	16,420 (7448)
32 (800)	30-3/4 (781)	70 (1778)	70 (1778)	70-5/8 (1794)	34-1/4 (870)	29 (737)	52-1/2 (1334)	9-5/8 (245)	-	22-7/8 (581)	23-5/8 (600)	6-1/4 (159)	15,560 (7058)	18,670 (8469)
34 (850)	32-3/4 (832)	76 (1930)	76 (1930)	76-5/8 (1946)	35-3/8 (899)	30-7/8 (784)	55 (1397)	9-5/8 (245)	-	22-7/8 (581)	23-5/8 (600)	6-1/4 (159)	19,040 (8636)	22,830 (10,356)
36 (900)	34-1/2 (876)	82 (2083)	82 (2083)	82-5/8 (2099)	36-7/8 (937)	32-3/8 (822)	58-1/2 (1486)	9-5/8 (245)	-	22-7/8 (581)	23-5/8 (600)	6-1/4 (159)	22,200 (10,070)	26,630 (12,079)
40 (1000)	38-1/2 (978)	(1)	(1)	(1)	40-1/2 (1029)	35-5/8 (905)	65-7/8 (1673)	9-5/8 (245)	-	22-7/8 (581)	23-5/8 (600)	6-1/4 (159)	28,320 (12,846)	33,990 (15,418)
42 (1050)	40-1/4 (1022)	(1)	(1)	(1)	42 (1067)	38-1/8 (968)	69-1/2 (1765)	9-5/8 (245)	-	25-5/8 (651)	47-1/4 (1200)	6-5/8 (168)	33,390 (15,145)	40,070 (18,175)
46 (1150)	44 (1118)	(1)	(1)	(1)	46-1/8 (1171)	42-1/2 (1080)	76-3/4 (1949)	9-5/8 (245)	-	25-5/8 (651)	47-1/4 (1200)	6-5/8 (168)	40,600 (18,416)	48,720 (22,099)
48 (1200)	46 (1168)	85-7/8 (2181)	85-7/8 (2181)	(1)	47-7/8 (1216)	44-3/8 (1127)	79-7/8 (2029)	9-5/8 (245)	-	25-5/8 (651)	47-1/4 (1200)	6-5/8 (168)	46,400 (21,047)	55,680 (25,256)
56 (1400)	54-1/2 (1384)	(1)	(1)	(1)	54-3/8 (1381)	50-3/8 (1280)	92-5/8 (2353)	11 (279)	-	-	-	-	71,050 (32,228)	85,250 (38,669)
60 (1500)	57-1/2 (1461)	(1)	(1)	(1)	58-1/8 (1476)	55-1/8 (1400)	99-3/8 (2524)	11 (279)	-	-	-	-	87,010 (39,467)	104,400 (47,355)

(1) Upon request

Flanges in accordance with ASME B16.5

Shaded bore sizes (D) according to API 6D
Shaded end-to-end dimensions (E) according to API 6D

Butt welding ends according to ASME B16.25

DIMENSIONS AND WEIGHTS (continued)

ASME CLASS 900

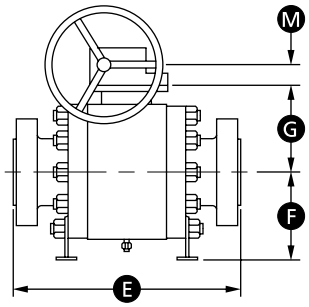

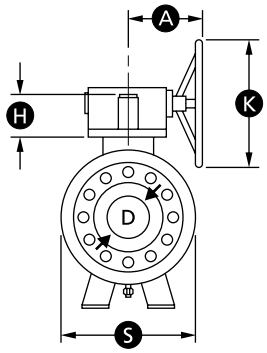

ASME CLASS 900

SIZE in. (mm)	D	E WE	E RF	E RTJ	F	G	S	H	L	A	K	M	WEIGHT lb (kg) WE	WEIGHT lb (kg) RF/RTJ
6 (150)	6 (152)	24 (610)	24 (610)	24-1/8 (613)	9-7/8 (251)	9-1/2 (241)	13-1/4 (337)	3-3/4 (95)	-	11-1/2 (292)	13-3/4 (349)	3 (76)	720 (327)	850 (386)
8 (200)	8 (203)	29 (737)	29 (737)	29-1/8 (740)	11-3/8 (289)	10-7/8 (276)	16-1/2 (419)	3-3/4 (95)	-	11-1/2 (292)	13-3/4 (349)	3 (76)	1190 (540)	1410 (640)
10 (250)	10 (254)	33 (838)	33 (838)	33-1/8 (841)	13-5/8 (346)	12-1/2 (318)	20-1/8 (511)	4-1/2 (114)	-	11-1/2 (292)	13-3/4 (349)	3 (76)	1760 (798)	2110 (957)
12 (300)	12 (305)	38 (965)	38 (965)	38-1/8 (968)	15-3/8 (391)	14-3/8 (365)	23-5/8 (600)	4-1/2 (114)	-	11-1/2 (292)	13-3/4 (349)	3 (67)	2440 (1107)	2930 (1329)
14 (350)	12-3/4 (324)	40-1/2 (1029)	40-1/2 (1029)	40-7/8 (1038)	17-3/4 (451)	15-3/8 (391)	26-3/4 (679)	4-1/2 (114)	-	15-3/4 (400)	23-5/8 (600)	4-3/8 (111)	3020 (1370)	3610 (1637)
16 (400)	14-3/4 (375)	44-1/2 (1130)	44-1/2 (1130)	44-7/8 (1140)	19-5/8 (499)	16-7/8 (429)	30-3/8 (772)	7-1/8 (181)	-	21-5/8 (549)	31-1/2 (800)	4-3/8 (111)	3630 (1647)	4360 (1978)
18 (450)	16-3/4 (425)	48 (1219)	48 (1219)	48-1/2 (1232)	21-5/8 (549)	19-1/8 (486)	33-1/2 (851)	7-1/8 (181)	-	21-5/8 (549)	31-1/2 (800)	5-3/8 (137)	5090 (2309)	6100 (2767)
20 (500)	18-5/8 (473)	52 (1321)	52 (1321)	52-1/2 (1334)	23-1/4 (591)	20-7/8 (530)	36-1/4 (921)	8-1/8 (206)	-	21-3/4 (552)	23-5/8 (600)	6-1/4 (159)	6870 (3116)	8240 (3738)
22 (550)	20-5/8 (524)	(1)	(1)	(1)	25-3/4 (654)	21-7/8 (556)	40-1/2 (1029)	8-1/8 (206)	-	22-7/8 (581)	23-5/8 (600)	6-1/4 (159)	8530 (3869)	10,220 (4636)
24 (600)	22-1/2 (572)	61 (1549)	61 (1549)	61-3/4 (1568)	27-1/2 (699)	24-3/8 (619)	43-3/4 (1111)	9-5/8 (245)	-	22-7/8 (581)	23-5/8 (600)	6-1/4 (159)	10,220 (4636)	12,250 (5557)
26 (650)	24-3/8 (619)	(1)	(1)	(1)	29-7/8 (759)	26-1/4 (667)	47-1/4 (1200)	9-5/8 (245)	-	22-7/8 (581)	23-5/8 (600)	6-1/4 (159)	12,960 (5879)	15,540 (7049)
28 (700)	26-1/4 (667)	(1)	(1)	(1)	31-7/8 (810)	27-7/8 (708)	50-3/4 (1289)	9-5/8 (245)	-	22-7/8 (581)	23-5/8 (600)	6-1/4 (159)	14,830 (6727)	17,790 (8069)
30 (750)	28-1/8 (715)	(1)	(1)	(1)	32-3/4 (832)	29-5/8 (753)	53-3/8 (1356)	9-5/8 (245)	-	22-7/8 (581)	23-5/8 (600)	6-1/4 (159)	17,790 (8069)	21,340 (9680)
32 (800)	30 (762)	(1)	(1)	(1)	35-7/8 (911)	31-7/8 (810)	57-1/2 (1461)	9-5/8 (245)	-	22-7/8 (581)	23-5/8 (600)	6-1/4 (159)	20,210 (9167)	24,250 (11,000)
34 (850)	31-7/8 (810)	(1)	(1)	(1)	37-3/4 (959)	33-3/8 (848)	61 (1549)	9-5/8 (245)	-	22-7/8 (581)	23-5/8 (600)	6-1/4 (159)	24,750 (11,226)	29,690 (13,467)
36 (900)	33-3/4 (857)	(1)	(1)	(1)	40-1/8 (1019)	34-3/4 (883)	64-3/8 (1635)	11 (279)	-	22-7/8 (581)	23-5/8 (600)	6-1/4 (159)	28,850 (13,086)	34,610 (15,699)
40 (1000)	37-5/8 (956)	(1)	(1)	(1)	44-1/8 (1121)	38-1/4 (972)	71-1/4 (1810)	11 (279)	-	22-7/8 (581)	23-5/8 (600)	6-1/4 (159)	36,810 (16,697)	44,170 (20,035)
42 (1050)	39-5/8 (1007)	(1)	(1)	(1)	47-1/4 (1200)	41-3/4 (1060)	74-3/4 (1888)	11 (279)	-	22-7/8 (581)	23-5/8 (600)	6-1/4 (159)	43,400 (19,686)	52,070 (23,619)
46 (1150)	43-3/8 (1102)	(1)	(1)	(1)	50-3/8 (1280)	43-3/4 (1111)	81-1/2 (2070)	11 (279)	-	22-7/8 (581)	23-5/8 (600)	6-1/4 (159)	52,770 (23,936)	63,310 (28,717)
48 (1200)	45-1/4 (1149)	(1)	(1)	(1)	52-3/8 (1330)	45-1/4 (1149)	85 (2159)	11 (279)	-	25-5/8 (651)	47-1/4 (1200)	6-5/8 (168)	60,310 (27,356)	72,370 (32,826)

(1) Upon request

Shaded bore sizes (D) according to API 6D
Shaded end-to-end dimensions (E) according to API 6D

Flanges in accordance with ASME B16.5

Butt welding ends according to ASME B16.25

ASME CLASS 1500

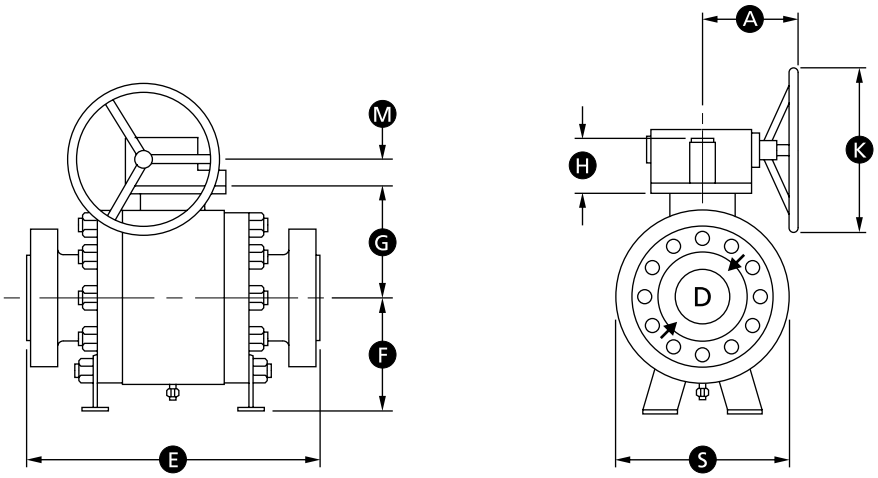

ASME CLASS 1500

SIZE in. (mm)	D	E			F	G	S	H	L	A	K	M	WEIGHT	lb (kg)
		WE	RF	RTJ									WE	RF/RTJ
6	5-3/4	27-3/4	27-3/4	28	12-5/8	11	16-7/8	3-3/4	-	11-1/2	13-3/4	3	850	1010
(150)	(146)	(705)	(705)	(711)	(321)	(279)	(429)	(95)	-	(292)	(349)	(76)	(386)	(458)
8	7-5/8	32-3/4	32-3/4	33-1/8	14-5/8	12-7/8	21-1/8	4-1/2	-	11-1/2	13-3/4	3	1410	1670
(200)	(194)	(832)	(832)	(841)	(372)	(327)	(537)	(114)	-	(292)	(349)	(76)	(640)	(757)
10	9-1/2	39	39	39-3/8	17-3/8	15-3/8	25-3/4	4-1/2	-	11-1/2	13-3/4	3	2110	2530
(250)	(241)	(991)	(991)	(1000)	(441)	(391)	(654)	(114)	-	(292)	(349)	(76)	(957)	(1148)
12	11-3/8	44-1/2	44-1/2	45-1/8	19-5/8	16-5/8	30-1/4	4-1/2	-	11-1/2	13-3/4	3	2930	3500
(300)	(289)	(1130)	(1130)	(1146)	(499)	(422)	(768)	(114)	-	(292)	(349)	(67)	(1329)	(1610)
14	12-1/2	49-1/2	49-1/2	50-1/4	22-5/8	19-5/8	34-1/4	7-1/8	-	15-3/4	23-5/8	4-3/8	3610	4320
(350)	(318)	(1257)	(1257)	(1276)	(575)	(499)	(870)	(181)	-	(400)	(600)	(111)	(1637)	(1960)
16	14-1/4	54-1/2	54-1/2	55-3/8	25-1/4	22	38-3/4	7-1/8	-	21-5/8	31-1/2	4-3/8	4360	5220
(400)	(362)	(1384)	(1384)	(1407)	(641)	(559)	(984)	(181)	-	(549)	(800)	(111)	(1978)	(2368)
18	16-1/4	(1)	(1)	(1)	27-3/4	23-1/4	42-7/8	8-1/8	-	21-5/8	31-1/2	4-3/8	6100	7310
(450)	(413)				(705)	(591)	(1089)	(206)	-	(549)	(800)	(111)	(2767)	(3316)
20	18	(1)	(1)	(1)	29-7/8	28-1/2	46-3/8	9-5/8	-	21-3/4	23-5/8	5-3/8	8240	9870
(500)	(457)				(759)	(724)	(1178)	(245)	-	(552)	(600)	(137)	(3738)	(4477)
22	19-3/4	(1)	(1)	(1)	33	30-1/4	51-7/8	9-5/8	-	22-7/8	23-5/8	6-1/4	10,220	12,250
(550)	(502)				(838)	(768)	(1318)	(245)		(581)	(600)	(159)	(4636)	(5557)
24	21-5/8	(1)	(1)	(1)	35-1/8	32	55-7/8	9-5/8	-	22-7/8	23-5/8	6-1/4	12,250	14,700
(600)	(549)				(892)	(813)	(1419)	(245)		(581)	(600)	(159)	(5557)	(6668)
26	23-1/2	(1)	(1)	(1)	38-1/4	35-1/2	60-1/2	11	-	-	-	-	15,540	18,650
(650)	(597)				(972)	(902)	(1537)	(279)					(7049)	(8459)
28	25-1/4	(1)	(1)	(1)	40-7/8	37	65	11	-	-	-	-	17,790	21,340
(700)	(641)				(1038)	(940)	(1651)	(279)					(8069)	(9680)
30	27	(1)	(1)	(1)	42	40-3/4	68-3/8	11	-	-	-	-	21,340	25,590
(750)	(686)				(1067)	(1035)	(1737)	(279)					(9680)	(11,607)
32	28-3/4	(1)	(1)	(1)	45-7/8	41-3/4	73-5/8	11	-	-	-	-	24,250	29,100
(800)	(730)				(1165)	(1060)	(1870)	(279)					(11,000)	(31,200)
34	30-1/2	(1)	(1)	(1)	48-3/8	44-7/8	78-1/8	11	-	-	-	-	29,690	35,620
(850)	(775)				(1229)	(1137)	(1984)	(279)					(13,467)	(16,157)
36	32-1/4	(1)	(1)	(1)	51-3/8	46-1/2	82-3/8	11	-	-	-	-	34,610	41,530
(900)	(819)				(1305)	(1181)	(2092)	(279)					(15,699)	(18,838)

(1) Upon request

Shaded bore sizes (D) according to API 6D
Shaded end-to-end dimensions (E) according to API 6D

Flanges in accordance with ASME B16.5

Butt welding ends according to ASME B16.25

GROVE B7
DESIGN FEATURES

Standard Features

B7.1

- Triple-barrier stem seals
- Factory-positioned external stops
- Emergency grease fitting for stem
- Stem separated from the ball; anti-blowout design
- Plastic polymer insert for seat sealing
- Self-relieving seats
- Metal-backed, self-lubricating bearings/washers
- Nickel plating for trim parts
- Fire-safe graphite rings
- Antistatic device

B7.B

- Triple-barrier stem seals
- Stem separate from the ball; anti-blowout design
- Ball load on the bearing blocks
- Double-barrier sealing in both directions (DPE)
- Body relief valve for overpressure
- Sealant injection system for emergency seal
- Metal-backed, self-lubricating bearings/washers
- Nickel plating for trim parts
- Trunnion mounted ball

Features Upon Request

B7.1

- PTFE various grades of reinforced gaskets, spring energized, for stem and seat sealing
- Metal-to-metal seats
- Double-barrier sealing in both directions (DPE)
- Body relief valve for overpressure
- Double block-and-bleed

Valve Construction

The B7 denomination identifies the side-entry ball valve ASME Class 2500.

Due to the high pressure and strong force involved, the materials selection is carried out by paying particular attention to the anti-extrusion features of the gaskets and to the resistance of the ball and stem materials.

GROVE B7.B

VALVE ASSEMBLY AND CROSS SECTION

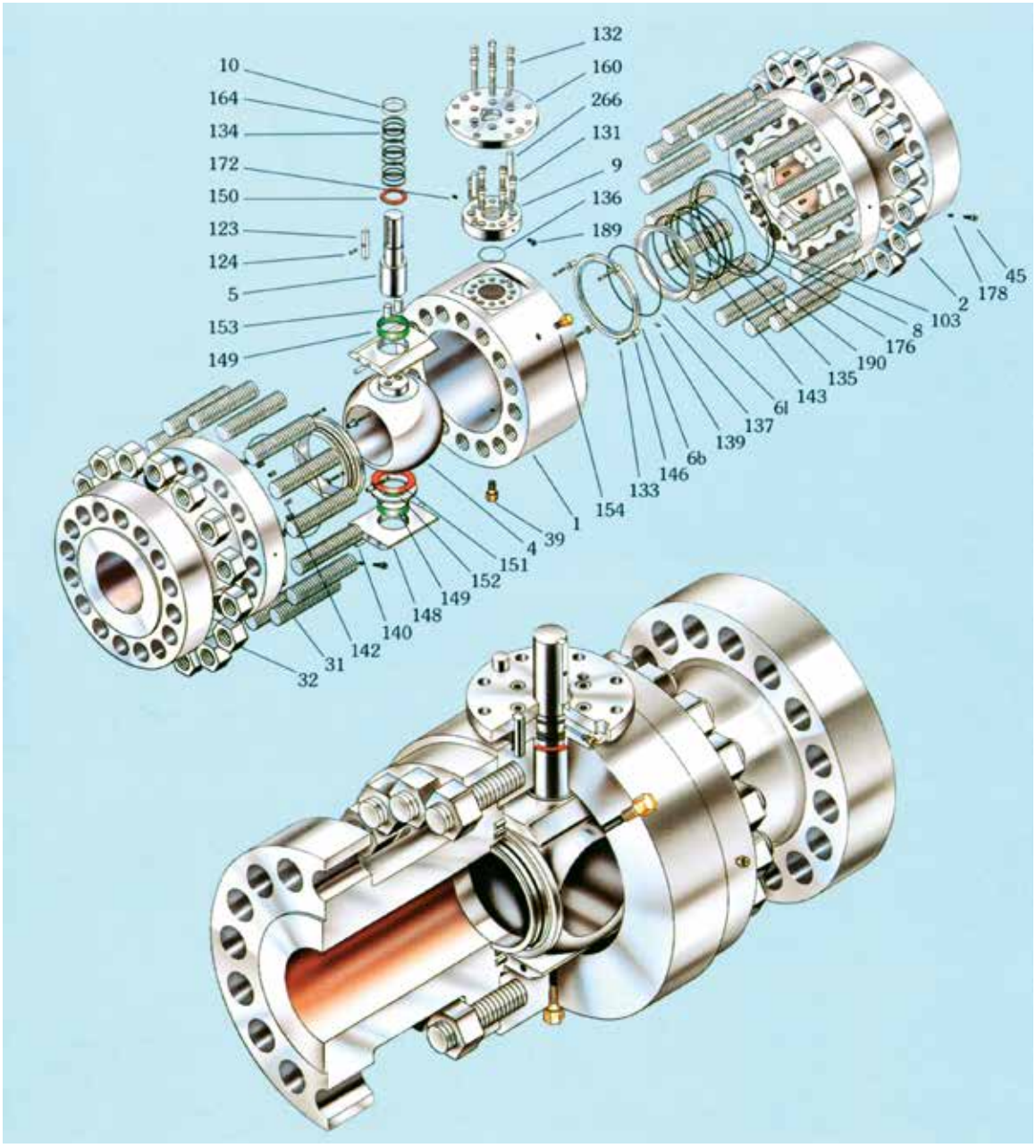

Item	Description	Item	Description	Item	Description
1	Body	123	Stem Key	149	Bearing
2	Closure	124	Stem Key Capscrew	150	Upper Thrust Washer
4	Ball	131	Gland Plate Capscrew	151	Lower Thrust Washer
5	Stem	132	Adapter Plate Capscrew	152	Spacer
6b	Outer Seat Ring	133	Puller Bushing Capscrew	153	Drive Pin
6l	Inner Seat Ring	134	Stem O-ring	154	Relief Valve
8	Body O-ring	135	Seat O-ring	160	Adapter Plate
9	Gland Plate	136	Gland Plate O-ring	164	Stem Backup Ring
10	Gland Bushing	137	Seal O-ring	172	Vent Plug
31	Body Stud	139	Seat Spring Pin	176	U-cup Packing
32	Body Stud Nut	140	Bearing Retainer Pin	178	Check Valve
39	Drain Valve	142	Spring	189	Gland Vent
45	Grease Fitting	143	Seat Lock Ring	190	Seat Backup Ring
103	Closure Backup Ring	146	Puller Bushing	299	Stop Spring Pin
		148	Bearing Retainer		

GROVE B7.1 and B7.B

DIMENSIONS AND WEIGHTS

ASME CLASS 2500

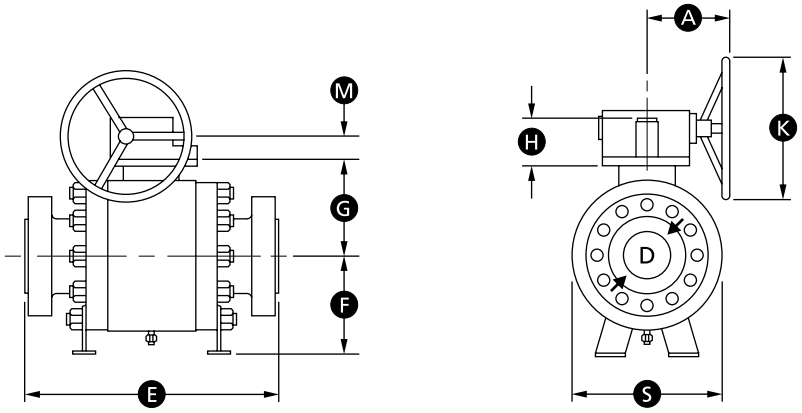

ASME CLASS 2500

SIZE in. (mm)	D	E WE	E RF	E RTJ	F	G	S	H	L	A	K	M	WEIGHT WE	lb (kg) RF/RTJ
1-1/2 (40)	1-1/4 (32)	15-1/8 (384)	15-1/8 (384)	15-1/4 (387)	3-7/8 (98)	5-1/2 (140)	6-7/8 (175)	2-3/8 (60)	-	7-1/2 (191)	7-7/8 (200)	1-3/4 (44)	80 (36)	130 (59)
2 x 1-1/2 x 2 (50 x 40 x 50)	1-1/4 (32)	17-3/4 (451)	17-3/4 (451)	17-7/8 (454)	3-7/8 (98)	5-1/2 (140)	6-7/8 (175)	2-3/8 (60)	-	7-1/2 (191)	7-7/8 (200)	1-3/4 (44)	90 (41)	180 (82)
2 (50)	1-3/4 (44)	17-3/4 (451)	17-3/4 (451)	17-7/8 (454)	4-3/8 (111)	6-1/4 (159)	7-7/8 (200)	2-3/8 (60)	-	7-1/2 (191)	7-7/8 (200)	1-3/4 (44)	150 (68)	260 (118)
3 x 2 x 3 (80 x 50 x 80)	1-3/4 (44)	22-3/4 (578)	22-3/4 (578)	23 (584)	4-3/8 (111)	6-1/4 (159)	7-7/8 (200)	2-3/8 (60)	-	7-1/2 (191)	7-7/8 (200)	1-3/4 (44)	210 (95)	330 (150)
3 (80)	2-1/2 (64)	22-3/4 (578)	22-3/4 (578)	23 (584)	5-1/2 (140)	7-1/8 (181)	9-7/8 (251)	2-1/2 (64)	-	8-3/4 (222)	13-3/4 (349)	2-5/8 (67)	350 (159)	480 (218)
4 x 3 x 4 (100 x 80 x 100)	2-1/2 (64)	26-1/2 (673)	26-1/2 (673)	26-7/8 (683)	5-1/2 (140)	7-1/8 (181)	9-7/8 (251)	2-1/2 (64)	-	8-3/4 (222)	13-3/4 (349)	2-5/8 (67)	370 (168)	620 (281)
4 (100)	3-1/2 (89)	26-1/2 (673)	26-1/2 (673)	26-7/8 (683)	9-7/8 (251)	7-7/8 (200)	14-5/8 (372)	3 (76)	-	11-1/2 (292)	13-3/4 (349)	3 (76)	700 (318)	790 (358)
6 x 4 x 6 (150 x 100 x 150)	3-1/2 (89)	36 (914)	36 (914)	36-1/2 (927)	9-7/8 (251)	7-7/8 (200)	14-58 (372)	3 (76)	-	11-1/2 (292)	13-3/4 (349)	3 (76)	730 (331)	1250 (567)
6 (150)	5-1/4 (133)	36 (914)	36 (914)	36-1/2 (927)	11-3/8 (289)	9-1/4 (235)	16-7/8 (429)	4-5/8 (118)	-	11-1/2 (292)	13-3/4 (349)	3 (76)	1480 (671)	1650 (748)
8 x 6 x 8 (200 x 150 x 200)	5-1/4 (133)	40-1/4 (1022)	40-1/4 (1022)	40-7/8 (1038)	11-3/8 (289)	9-1/4 (235)	16-7/8 (429)	4-5/8 (118)	-	11-1/2 (292)	13-3/4 (349)	3 (76)	1890 (857)	2180 (989)

SIZE in. (mm)	D	E WE	E RF	E RTJ	F	G	S	H	L	A	K	M	WEIGHT WE	lb (kg) RF/RTJ
8 (200)	7-1/8 (181)	40-1/4 (1022)	40-1/4 (1022)	40-7/8 (1038)	15-1/8 (384)	15-1/2 (394)	26 (660)	4-5/8 (118)	-	15-3/4 (400)	23-5/8 (600)	4-3/8 (111)	3650 (1656)	4340 (1969)
10 (250)	8-7/8 (226)	50 (1270)	50 (1270)	50-7/8 (1292)	17-1/8 (435)	18-1/4 (464)	31-1/8 (790)	5-1/2 (140)	-	21-5/8 (549)	31-1/2 (800)	4-3/8 (111)	5480 (2486)	6590 (2989)
12 (300)	10-1/2 (267)	56 (1422)	56 (1422)	56-7/8 (1445)	19-5/8 (499)	20-1/2 (521)	34-1/4 (870)	5-1/2 (140)	-	21-5/8 (549)	31-1/2 (800)	4-3/8 (111)	7600 (3447)	9100 (4128)
14 (350)	12-1/4 (311)	(1)	(1)	(1)	22-7/8 (581)	24-3/4 (629)	39 (991)	8-1/8 (206)	-	21-3/4 (552)	23-5/8 (600)	5-3/8 (137)	9390 (4259)	11,220 (5089)
16 (400)	13-7/8 (353)	(1)	(1)	(1)	26-3/8 (670)	28-3/8 (721)	43-1/4 (1099)	8-1/8 (206)	-	21-3/4 (552)	23-5/8 (600)	5-3/8 (137)	11,330 (5139)	13,580 (6160)
18 (450)	15-5/8 (397)	(1)	(1)	(1)	29-1/8 (740)	31-7/8 (810)	47-7/8 (1216)	11 (279)	-	22-7/8 (581)	23-5/8 (600)	6-1/4 (159)	15,870 (7199)	19,020 (8627)
20 (500)	17-1/4 (438)	(1)	(1)	(1)	32-1/2 (826)	35-3/8 (899)	52-1/8 (1324)	11 (279)	-	22-7/8 (581)	23-5/8 (600)	6-1/4 (159)	21,420 (9716)	25,660 (11,639)

Flanges in accordance with ASME B16.5
Shaded bore sizes (D) according to API 6D
Shaded end-to-end dimensions (E) according to API 6D

Butt welding ends according to ASME B16.25
Outlined end-to-end dimensions (E) according to ASME B16.10

Quality System



Quality Assurance Program

ISO 9001:2000 and API Q1 Standards

All valves are designed in accordance with the most stringent industry procedures and standards and are built according to the European Directives PED and ATEX upon request.

Approvals

Cameron is an authorized licensee to use the American Petroleum Institute (API) monogram for specification API 6D and API 6A.

Certifications

- 10423/API 6A
- ISO 14313/API 6D
- ISO 17423/API 6DSS

Inspection

Inspection is done per the Quality System requirements based on ISO 9001: 2000 and API Q1. Cameron verifies all processes from material receipt to final customer inspection, including the liaison with third-party inspection and certifying authorities.

All products can be supplied with certified test reports, which include pressure testing, NDT, and chemical and physical analysis, along with any other specified special test requirements.

The material certification of the valve parts can be furnished in accordance with DIN 50049-EN 10204 3.1 (at least) or 3.2.

Special Process

Cameron operates its own in-house electroless nickel plating (ENP) facility.

ASTM B656 and ASTM B733 are the reference standards for plating process and control. Strict quality control procedures for critical process conditions and for the plated components maintain plating consistency.

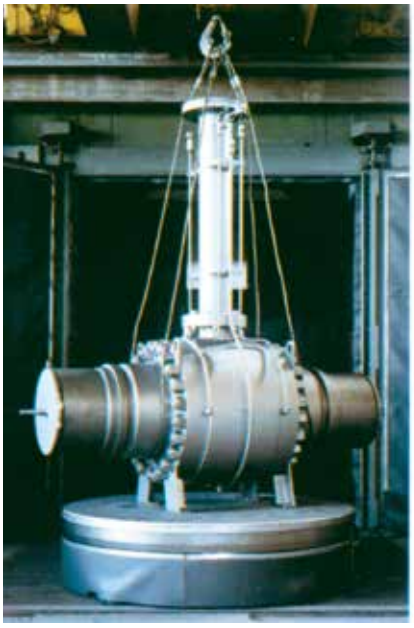



Qualification Testing

Research And Development Lab

Cameron's GROVE valves are designed in accordance with the applicable or requested codes and are subjected to full in-house qualification testing. Our in-house testing facilities, with the participation of the major oil and gas companies' R&D programs, allows Cameron to supply high-quality products.

Hydraulic and gas sealing tests, functional tests, and cycling and torque tests all are carried out on prototype valves. These test procedures ensure that the design safety factors, the maximum allowable leakage rates and the expected valve service life are achieved.

Structural Verification

Cameron's engineering department operates an advanced 3D CAD system and conducts finite element analysis (FEA) to simulate various load conditions to determine a component's suitability for the intended service.



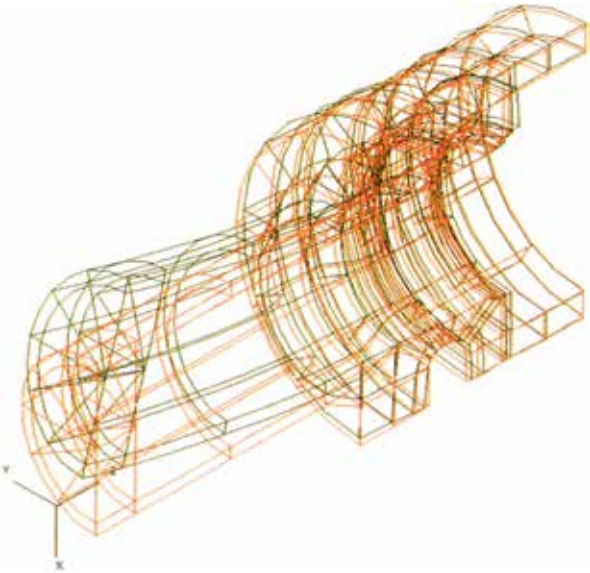

Fire-safe Tests and Certifications

Cameron conducts in-house fire-safe testing, and its GROVE valves are certified in compliance with API 6FA and BS 6755 Part 2 fire-safe standards.

A complete reference list of qualified and certified valves can be made available upon customer's request.

Cycling Test Under Flow Conditions

Through its in-house flow facility, Cameron verifies the behavior of valves subjected to cycle testing under dynamic flow conditions with the presence of abrasive particles. This test loop has the capacity to test valves up to 6" nominal bore with a maximum service pressure of 2900 psi (200 bar).

The main test parameters are PC entered and recorded for future design reference.

High-pressure Gas Testing

Customers' specifications may dictate more severe testing in addition to conventional hydrostatic testing.

Cameron is fully equipped to carry out enhanced gas testing at ambient, low and high temperatures using specially equipped bunkers. External leakage rates (if any) are verified by means of a mass spectrometer. Leakage through the seats (if any) is verified by means of calibrated flow meters.

For low- and high-temperature service, gas testing can be performed to customer-specified critical dimensions. Cameron has test facilities for various valve dimensions. Testing can be performed at a range of temperatures from -184° F to 752° F (-120° C to 400° C).

CAMSERV™ Services for Valves and Actuation

WE BUILD IT. WE BACK IT.

Global Network and Local Support

Cameron is well-positioned to deliver total aftermarket support, quickly and efficiently, with unmatched OEM expertise. Our highly skilled engineers and technicians are available around the clock, seven days a week to respond to customer queries, troubleshoot problems and offer reliable solutions.

Easily Accessible Parts and Spare Valves

- OEM spare valves, actuators and parts (including non-Cameron brands)
- Handling, storage, packaging and delivery
- Dedicated stocking program

Comprehensive Aftermarket Services Portfolio

- Parts and spare valves
- Repair
- Field services
- Preventative maintenance
- Equipment testing and diagnostics
- Remanufacturing
- Asset preservation
- Customer property management
- Training and recertification services
- Warranty

Customized Total Valve CareSM (TVC) Programs

Customized asset management plans that optimize uptime, availability and dedicated services.

- Engineering consultancy
- Site management
- Flange management
- Startup and commissioning
- Spare parts and asset management
- Operational support







Trademark Information

GROVE is a registered trademark of Cameron. CAMSERV is a trademark of Cameron.

This document contains references to registered trademarks or product designations, which are not owned by Cameron.

Trademark	Owner
Celcon	Hoechst Celanese Corporation
Delrin	E.I. DuPont De Nemours & Company
Fluorel	Minnesota Mining and Manufacturing Company
Hastelloy	Haynes International, Inc.
Hycar	Hydrocarbon Chemical and Rubber Company
Hydrin	Zeon Chemicals USA, Inc.
Hypalon	E.I. DuPont De Nemours & Company
Inconel	INCO Nickel Sales, Inc.
Monel	INCO Alloys International, Inc.
Nordel	E.I. DuPont De Nemours & Company
Stellite	Stoody Deloro Stellite, Inc.
Teflon	E.I. DuPont De Nemours & Company
Viton	E.I. DuPont De Nemours & Company

CAMERON

3250 Briarpark Drive, Suite 300
Houston, TX 77042
USA
Toll Free 1 800 323 9160

For more information, visit
www.c-a-m.com/valves

HSSE Policy Statement
At Cameron, we are committed ethically, financially and personally to a working environment where no one gets hurt and nothing gets harmed.

©2013 Cameron. | GROVE is a registered trademark of Cameron. CAMSERV is a trademark of Cameron. | Printed in USA, SWP, 2.5M | 05/13 AD00469V

BALON.

Made in USA

FLOATING BALL VALVE INSTALLATION, MAINTENANCE, REPAIR MANUAL

BALON. Corporation • 3245 S. Hattie
Oklahoma City, Oklahoma 73129
Telephone: (405) 677-3321 • Fax: (405) 677-3917
Email:Balon@balon.com • www.balon.com

© 2010 Balon Corporation

TABLE OF CONTENTS

Balon Ball Valve Storage....2
Balon Ball Valve Installation....2
Balon Ball Valve Operation 3

Maintenance For All Balon Ball Valves....4
Seal Kit Contents....4

Series "F" and "S" Screwed End and Flanged End, Lever Operated Parts List....5
Series "F" and "S" Screwed End and Flanged End, Lever Operated Repair Instructions....6
Series "F" Flanged End, Gear Operated Parts List....7
Series "F" Flanged End, Gear Operated Repair Instructions.... 7 & 8
Series "LM" Parts List and Repair Instructions....9
Series "LS" Parts List and Repair Instructions....10
Balon Contact Information....12

WARNING: BEFORE ATTEMPTING TO REPAIR A VALVE THAT HAS BEEN IN SERVICE BE SURE TO BLOCK THE ENDS AND SLOWLY OPEN AND CLOSE THE VALVE TO VENT ANY INTERNAL PRESSURE.

BALON BALL VALVE STORAGE

Balon Corporation ships ball valves in the open position. In order to protect valves during shipment, Balon ships valves in cardboard cartons or wooden boxes. The hand wheels on gear-operated valves are removed and secured to the valves for shipment. With the exception of Series 'LM' and Series 'LS' valves, valve handles are sold and shipped separately from the valves.

Valves should always be stored in the fully open position and should be kept indoors under clean, dry conditions.

BALON BALL VALVE INSTALLATION

With the exception of freeze resistant uni-directional valves, Balon ball valves seal bi-directionally and may be installed in either direction.

Balon valves may be ordered as freeze resistant uni-directional valves. An arrow on the stem of a Balon uni-directional valve indicates the required fl ow direction. These valves are not bi-directional.

Valves should be installed in the open position. Heavy valves should be lifted into position using suitable straps.

Industry accepted make-up practice should be followed when installing flanged end valves.

Balon recommends the use of a high quality thread compound when installing threaded end valves. A back-up wrench should be placed on the valve component (body or end adapter) nearest to the pipe connection that is being adjusted.

Trash, such as welding slag, dirt, sand, and other foreign matter, should always be flushed from the line before operating any valve. It is recommended to fill and drain water while the valve is fully open to avoid trapping debris.

Piping systems are often pressure tested prior to their being placed in service. With valves in the open position or partially open position, valve shell testing may be done at a pressure up to 1.5 times the rated working pressure of the valves. Valves should be kept in the open position or partially open position during shell testing. Valve shell testing should never be done with the valves in the closed position.

With valves in the fully closed position, valve seat testing may be done at pressures up to 1.1 times the rated working pressure of the valves.

The pressure test medium should be eliminated from the system after testing has been completed. Water that is allowed to remain trapped inside valves can freeze. Water that freezes inside valves can damage the valves and associated pipe.

BALON BALL VALVE OPERATION

A ball valve is designed to be used in the fully open or fully closed position. Using a ball valve in the partially open position can result in seat damage and, under certain conditions, damage to other valve components. Applying excessive torque in an attempt to turn a ball beyond its 90 degree stop point could damage the valve stops and misalign the ball.

A valve should always be operated within its pressure and temperature limits.

It is good practice to operate any valve periodically in order to assure that the ball is able to move freely.

BALON BALL VALVE MAINTENANCE
SERIES "F" AND "S" FLANGED END AND SCREWED END
(LEVER OPERATED AND GEAR OPERATED)
SERIES "LM" AND "LS" SCREWED END

MAINTENANCE FOR BALON BALL VALVES:

Balon valves require no regular maintenance to maintain proper operation and sealing. Balon stems require no adjustment or greasing for proper sealing and operation.

SEAL KIT CONTENTS: SERIES "F"AND "S" LEVER OPERATED

1. Seal kits are available for Balon Series "F" and "S" ball valves. Each kit contains the following parts:
   - A. 2 - Ball Seats
   - B. 1 – Body O-Ring
   - C. 1 – Stem TFE Thrust Washer
   - D. 1 – Stem O-Ring
   - E. 1 – Stem Stop Plate Retainer Ring
   - F. 1 - Stem Weather Guard
   - G. 1 - Dust Cover
   - H. 1 - Stop Plate Retainer
   - I. 1 - Stop Plate

SEAL KIT CONTENTS: SERIES "F" GEAR OPERATED

1. Seal kits are available for Balon Series "F" Flanged End Gear Operated ball valves. Each kit contains the following parts:
   - A. 2 - Ball Seats
   - B. 1 - Body O-Ring
   - C. 1 - Stem TFE Thrust Washer
   - D. 1 - Stem O-Ring
   - E. 1 - Stem Stop Plate Retainer Ring
   - G. 1 - Stem Key

SEAL KIT CONTENTS: SERIES "LM" AND "LS"

1. Seal kits are available for Balon Series "LM" and "LS" ball valves. Each kit contains the following parts:
   - A. 2 - Ball Seats
   - B. 1 - Weather Guard
   - C. 1 - Stem Washer
   - D. 1 - Stem Seal
   - E. 1 - Body Seal

Seal kits are sold by valve ball bore size and will fit any Balon ball valve with that bore size, regardless of valve material, end style, or working pressure. (Must specify NACE seal kit if valve has NACE trim. The valve will have letter N in valve part number tag, such as 2R-F63N-RF.) Otherwise, order standard seal kit. If letters TFE appear on valve tag, order Teflon seats.

BALON BALL VALVE PARTS LIST
SERIES "F" AND "S"
(LEVER OPERATED)

ITEM	PART NAME
1	Handle
2	Handle Bolt
3	Weather Guard
4	Lock Plate Retainer
5	Lock Plate
6	Dust Cover
7	Stop Plate Retainer
8	Stop Plate
9	Stem O-Ring
10	Stem Seal
11	Stem
12	Ball
13	Ball Seat
14	Body O-Ring
15	End Adapter
16	Body
17	Body Stud Nuts
18	Body Stud Bolts
19	Body Bolts

Series "F"
Screwed End
Grooved End

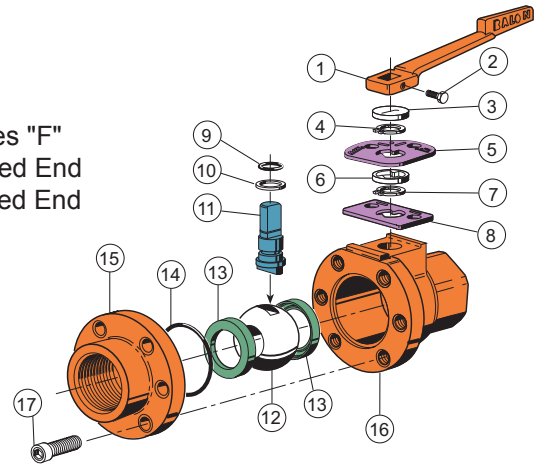

Series "F"
Flanged End

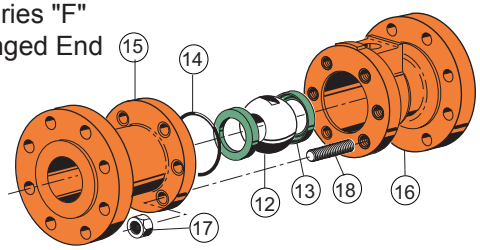

BALON BALL VALVES HAVE A BODY SECTION WHICH CONTAINS THE BALL AND STEM AND THE ADAPTER SECTION THAT BOLTS OR SCREWS TO THE BODY.

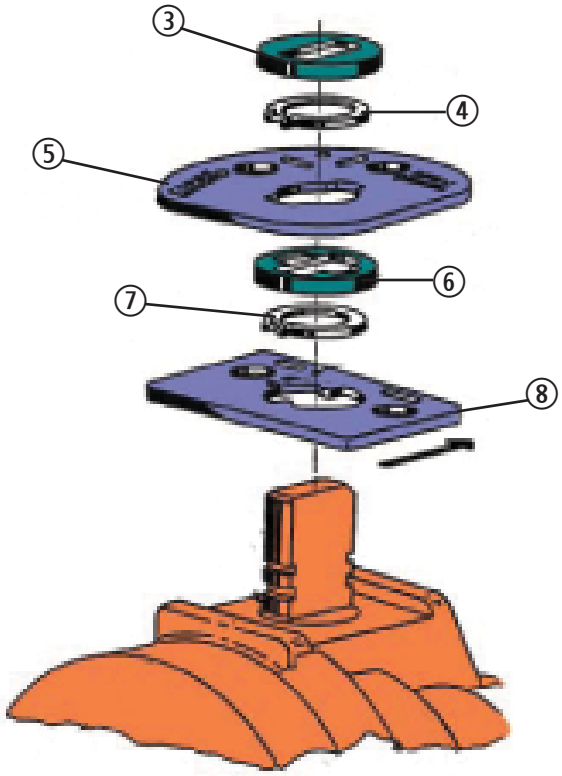

WITH SAFETY LOCK DEVICE
FIGURE 1

Series "F"
Screwed End
Grooved End
1" Full and Larger

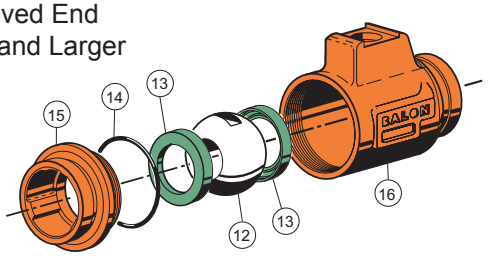

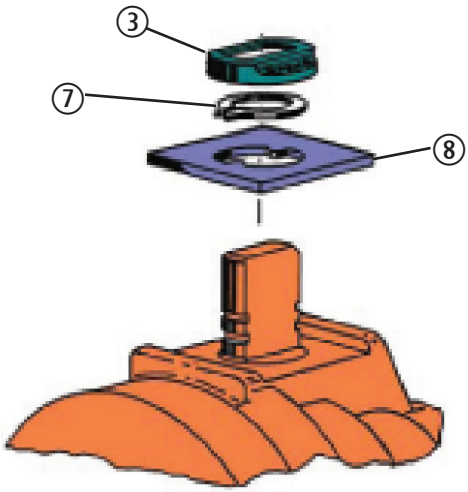

WITHOUT SAFETY LOCK DEVICE
FIGURE 1

WARNING: BEFORE ATTEMPTING TO REPAIR A VALVE THAT HAS BEEN IN SERVICE BE SURE TO BLOCK THE ENDS AND SLOWLY OPEN AND CLOSE THE VALVE TO VENT ANY INTERNAL PRESSURE.

BALON BALL VALVE REPAIR
SERIES "F" AND "S"
(LEVER OPERATED)

1. **<u>WARNING:</u> BEFORE ATTEMPTING TO REPAIR A VALVE THAT HAS BEEN IN SERVICE BE SURE TO BLOCK THE ENDS AND SLOWLY OPEN AND CLOSE THE VALVE TO VENT ANY INTERNAL PRESSURE.**
2. Disassemble valve body and adapter.
3. With valve in closed position remove ball seat (13), body O-Ring (14), and ball (12).
4. Remove stem top works. (Note position of all components.)
5. Before removing stem, carefully file all edges of stem wrench flats and stop plate area to remove any burrs or permanent damage may occur to the stem bore. (FIG. 1)
6. Remove stem (11), stem O-Ring (9), and stem washer (10).
7. Clean all valve components thoroughly.
8. Install new stem seals (9) and (10) and grease.
9. Install stem (11) in valve. Install stop plate (8) and stop plate retainer (7) and fill cavity around stem with grease. **(IF VALVE IS NOT EQUIPPED WITH STANDARD SAFETY LOCK DEVICE (FIG. 2) SKIP TO STEP 10.)** Install dust cover (6). Install lock plate (5). Check for proper alignment, one hole and one slot on lock plate should line up with one hole and one slot on stop plate when fully open or closed. Install lock plate retainer (4). Grease snap ring area and install weather guard (3).
10. Install new ball seats (13) and body O-Ring (14), and grease.
11. Install ball (12).
12. Assemble valve. When installing body to end adapter, be careful not to pinch or damage O-Ring.
13. After valve is assembled, cycle to assure free and easy operation.

SYNTHETIC GREASE THAT IS MOISTURE RESISTANT SHOULD BE USED.
IF ANY PROBLEMS ARE ENCOUNTERED, CONTACT BALON CORPORATION AT 405-677-3321.

BALON

BALON BALL VALVE PARTS LIST
SERIES "F" FLANGED END
(GEAR OPERATED)

ITEM	PART NAME
1	Gear Operator
2	Hand Wheel
3	Drive Pin
4	Stem Key
5	Stem Retainer Ring
6	Mounting Plate
7	Mounting Plate Screws
8	Lock Washers
9	Mounting Screws
10	Stem O-Ring
11	Stem Seal
12	Stem
13	End Adapter
14	Body
15	Body O-Ring
16	Ball Seats
17	Ball
18	Body Stud Nuts
19	Body Stud Bolts

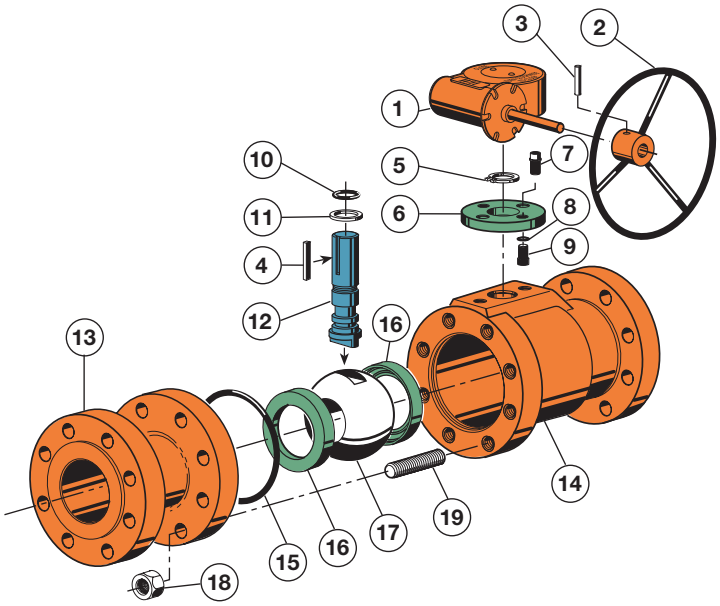

SYNTHETIC GREASE THAT IS MOISTURE RESISTANT SHOULD BE USED.
IF ANY PROBLEMS ARE ENCOUNTERED, CONTACT BALON CORPORATION AT 405-677-3321.

BALON BALL VALVE DISASSEMBLY REPAIR
SERIES "F" FLANGED END
(GEAR OPERATED)

<u>WARNING:</u> BEFORE ATTEMPTING TO REPAIR A VALVE THAT HAS BEEN IN SERVICE BE SURE TO BLOCK THE ENDS AND SLOWLY OPEN AND CLOSE THE VALVE TO VENT ANY INTERNAL PRESSURE.

<u>DISASSEMBLY PROCEDURE FOR BALON BALL VALVES</u>:

1. **NOTE: SEE WARNING ABOVE BEFORE BEGINNING REPAIR OR SERVICE WORK.**
2. After the valve has been removed from the line, place the valve in the vertical position with the valve body section (14) on the bottom. Remove body stud nuts (18). Be careful to protect the machined faces. Lift off end adapter (13).
3. Using gear operator, rotate the stem and ball to the closed position and lift out the ball (17).
4. Remove gear operator mounting screws (9). Pull gear operator off of mounting plate (6).
5. Remove stem retainer ring (5) and stem key (4). Carefully file outside of stem to remove any burrs or **permanent damage** to stem bore can occur.
6. Push stem (12) down into body housing and remove.
7. Remove all seats, seals and O-Rings, part numbers (10), (11), (15), (16).

NOTE: SEE PAGE 8 FOR ASSEMBLY PROCEDURE.

SYNTHETIC GREASE THAT IS MOISTURE RESISTANT SHOULD BE USED.
IF ANY PROBLEMS ARE ENCOUNTERED, CONTACT BALON CORPORATION AT 405-677-3321.

ASSEMBLY PROCEDURE FOR BALON BALL VALVES:

1. Clean all valve components thoroughly and check for corrosion, excessive wear, scoring, etc. (Note: If there is excessive corrosion in seat cavities or stem bore area the valve may not seal nor operate properly when re-assembled.)
2. Install new stem seal (11) and stem O-Ring (10). Grease O-Ring and stem with good quality water impervious grease and install in valve body (14).
3. Install stem retainer ring (5).
4. Install new ball seats (16) in body and adapter cavity and grease seat faces.
5. Grease retainer ring area of stem. Install stem key (4) in stem slot. Mount gear operator (1) on top of stem and rotate gear operator to align its pins with the mating holes on the adapter plate (6). Push Gear Operator down to the adapter plate. Install mounting screws (9) and lock washers (8) and tighten.
6. Using gear operator, rotate stem to closed position. Line up slot on ball with male end of stem in the body cavity and install ball into body cavity.
7. Align the bolt holes on the body and adapter. (Note: On flanged end valves be sure the flanged end bolt holes are aligned with each other.)
8. Set adapter on body. Be careful not to pinch or damage body O-Ring (15). Using hand pressure, push the adapter down to seat the O-Ring.
9. Install nuts and studs or bolts. Tighten bolts, alternating from one side to the opposite side bolt in a clockwise direction.
10. After valve is assembled, cycle to assure free and easy operation.

SYNTHETIC GREASE THAT IS MOISTURE RESISTANT SHOULD BE USED.
IF ANY PROBLEMS ARE ENCOUNTERED, CONTACT BALON CORPORATION AT 405-677-3321.

BALON BALL VALVE PARTS LIST AND REPAIR
SERIES "LM"

ITEM	PART NAME
1	Weather Guard
2	Stem Nut
3	Spacer
4	Lock Plate
5	Handle
6	Stem Washer
7	Stop Pin
8	Stem O-Ring
9	Stem Seal
10	Stem
11	Body
12	Ball Seat
13	Ball
14	Body Seal
15	End Adapter
16	Body Bolts

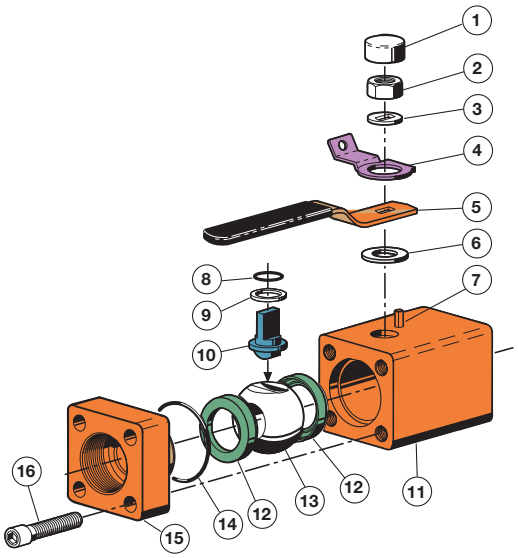

INSTRUCTIONS FOR SEAL REPLACEMENT

1. **WARNING: BEFORE ATTEMPTING TO REPAIR A VALVE THAT HAS BEEN IN SERVICE BE SURE TO BLOCK THE ENDS AND SLOWLY OPEN AND CLOSE THE VALVE TO VENT ANY INTERNAL PRESSURE.**
2. Disassemble valve.
3. Remove all ball seats (12), body seal (14), stem O-Ring (8), and stem washer (6).
4. Clean all valve components thoroughly.
5. Install new stem O-Ring (8) on stem (10) and lubricate. Insert stem and stem seal into body. Then add the new stem washer (6), handle (5), lock plate (4) or lock washer if applicable, and stem nut (2). Tighten nut securely. If applicable, install weather guard (1).
6. Install new ball seats (12) and grease seat faces with a good quality grease.
7. Install body seal (14). NOTE: This kit contains 2 different types of body seals: A white Teflon ring and a rubber O-Ring. For proper seal, you must replace the body seal with the same type as the one that was originally installed.
8. Re-assemble valve. When installing body to end adapter be careful not to pinch or damage body seal.
9. After valve is assembled, cycle to assure free and easy operation.

SYNTHETIC GREASE THAT IS MOISTURE RESISTANT SHOULD BE USED.
IF ANY PROBLEMS ARE ENCOUNTERED, CONTACT BALON CORPORATION AT 405-677-3321.

BALON BALL VALVE PARTS LIST AND REPAIR
SERIES "LS"

ITEM	PART NAME
1	Weather Guard
2	Stem Nut
3	Spacer
4	Lock Plate
5	Handle
6	Stem Washer
7	Stop Pin
8	Stem O-Ring
9	Stem Seal
10	Stem
11	Body
12	Ball Seat
13	Ball
14	Body O-Ring
15	Adapter

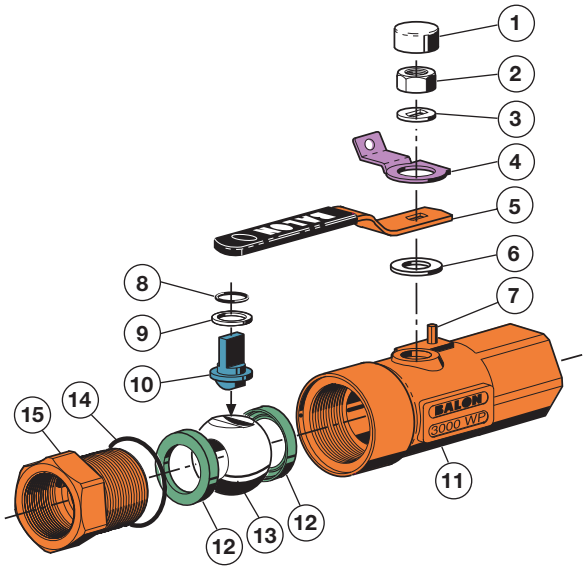

INSTRUCTIONS FOR SEAL REPLACEMENT:

1. **WARNING: BEFORE ATTEMPTING TO REPAIR A VALVE THAT HAS BEEN IN SERVICE BE SURE TO BLOCK THE ENDS AND SLOWLY OPEN AND CLOSE THE VALVE TO VENT ANY INTERNAL PRESSURE.**
2. Disassemble the valve by unscrewing the end adapter.
3. Remove all ball seats (12), body seal (14), stem O-Ring (8), stem seal (9), and stem washer (6).
4. Clean all valve components thoroughly.
5. Install new stem O-Ring (8) and seal (9) on stem (10) and lubricate. Insert stem and stem seal into body. Then add the new stem washer (6), handle (5), lock plate (4) or lock washer if applicable, and stem nut (2). Tighten nut securely. If applicable, install weather guard (1).
6. Install new ball seats (12) and grease seat faces with a good quality grease.
7. Install body seal (14). NOTE: This kit contains 2 different types of body seals: A white Teflon ring and a rubber O-Ring. For proper seal, you must replace the body seal with the same type as the one that was originally installed.
8. Re-assemble valve. When installing body to end adapter be careful not to pinch or damage body seal.
9. After valve is assembled, crimp the end of the body tightly around the end adapter. Cycle to assure free and easy operation.

SYNTHETIC GREASE THAT IS MOISTURE RESISTANT SHOULD BE USED.
IF ANY PROBLEMS ARE ENCOUNTERED, CONTACT BALON CORPORATION AT 405-677-3321.

BALON Corporation
3245 S. Hattie
Oklahoma City, Oklahoma 73129
Téléphone: (405) 677-3321
Fax: (405) 677-3917

E-mail:Balon@Balon.com • www.balon.com

FLOATING BALL VALVES

BALON FLOATING BALL VALVES B-1

BALL VALVE IDENTIFICATION KEY B-2

INTRODUCTION
The Balon Valve: Totally Advanced B-3
Multi-Seal: The Heart of the Valve B-4
An Advanced Concept in Stem Design B-5
A More Complete Solution to Fire Safety B-6

CARBON STEEL VALVES
Threaded End Connection
Series LM, 3000 PSI WP (1/4″ Through 1″) B-7
Series S, To 5000 PSI WP (1″ Through 2″) B-8
Series F, To 5000 PSI WP (1″ Through 4″) B-9
Flanged End Connection
Series F, ANSI 150, 285 PSI WP (2″ Through 6″) B-10
Series F, ANSI 150, 285 PSI WP (6″ Through 10″) B-11
Series F, ANSI 300, 740 PSI WP (2″ Through 6″) B-12
Series F, ANSI 300, 740 PSI WP (6″ Through 8″) B-13
Series F, ANSI 600, 1480 PSI WP (2″ Through 4″) B-14
Series F, ANSI 600, 1480 PSI WP (4″ Through 8″) B-15
Series F, ANSI 900, 2220 PSI WP (2″) B-16
Series F, ANSI 1500, 3705 PSI WP (2″) B-17
Weld x Flange Connection
Series US, ANSI 150, 285 PSI WP (2″ Through 4″) B-18
Series US, ANSI 300, 740 PSI WP (2″ Through 4″) B-19
Weld x Weld Connection
Series US, ANSI 150, 285 PSI WP (2″ Through 6″) B-20
Series US, ANSI 300, 740 PSI WP (2″ Through 6″) B-21

DUCTILE IRON VALVES
Threaded End Connection
Series S, To 2000 PSI WP (1″ Through 4″) B-22
Series F, To 2000 PSI WP (1″ Through 4″) B-23
Grooved End Connection
Series S, 750 PSI WP (2″ Through 4″) B-24
Flanged End Connection
Series F, ANSI Class 300, 640 PSI WP (2″ Through 4″) B-25
Series F, ANSI Class 125, 150, To 250 PSI WP (2″ Through 6″) B-26
Series F, ANSI Class 150, 250 PSI WP (2″ Through 4″) B-27

ALUMINUM BRONZE VALVES
Threaded End Connection
Series S, To 1000 PSI WP (2″ Through 4″) B-28
Series F, To 3000 PSI WP (1″ Through 2″) B-29
Grooved End Connection
Series S, 1000 PSI WP (2″ Through 4″) B-30
Series F, 2000 PSI WP (2″) B-31

STAINLESS STEEL VALVES
Threaded End Connection
Series LS, To 3000 PSI WP (1/4″ Through 1″) B-32
Series S, To 3000 PSI WP (2″) B-33

TECHNICAL INFORMATION
Actuator Sizing / Standards and Specifications B-34
Application Guide B-35
Seat Pressure and Temperature Ratings B-36
Flow Co-Efficient Data B-37
Installation Photos B-38

Floating Ball Valve Identification Key

Balon Threaded End / Grooved End Series F, S, UNI

Nominal Pipe Size	Port Size	Valve Series	Valve Working Pressure	Valve Material	Trim (Ball & Stem Material)	End Connection
2	R Reduced Port	S Threaded Body	2 500 PSI WP	2 Ductile Iron	Not Used if Carbon Steel Standard	S E Threaded End
R	F Full Port	F Bolted Body	3 750 PSI WP	3 Carbon Steel	N NACE Stainless Steel Ball & Stem	G E Grooved End
F			4 1000 PSI WP	4 Aluminum Bronze		
9			6 1500 PSI WP	5 Stainless Steel		
2			9 2000 PSI WP or 2500 PSI WP 2″ Reduced Carbon Steel			
N			0 2500 PSI WP or 3000 PSI WP			
S			5M 5000 PSI WP			
E						

*Note: For Threaded End Unidirectional valve substitute **UNI** for **SE**. For Grooved End Unidirectional valve specify **UNI** after **GE**.*

Balon Flanged End, Weld End Series F, US

Nominal Pipe Size	Port Size	Valve Series	Valve Working Pressure	Valve Material	Trim (Ball & Stem Material)	End Connection
2	R Reduced Port	F Bolted Body	1 ANSI 150 285 WP Carbon Steel Ductile Iron RF 250 WP FF 200 WP	2 Ductile Iron	Not Used if Carbon Steel Standard	R F Raised Face
R	F Full Port	US Weld X Weld Weld X Flange	3 ANSI 300 740 WP Carbon Steel Ductile Iron RF 640 WP	3 Carbon Steel	N NACE Stainless Steel Ball & Stem	R J Ring Type Joint
F			6 ANSI 600 1480 WP			B W Butt Weld
1			9 ANSI 900 2220 WP			W F Weld X Flange
3			0 ANSI 1500 3705 WP			F F Flat Face (Ductile Only)
N						
R						
F						

Balon Threaded End Series L

L Series

Valve Series	Valve Material	Valve Working Pressure	Nominal Pipe Size	Port Size	Trim (Ball & Stem Material)
L	M Carbon Steel Series	3 Carbon Steel	6 3000 PSI WP Carbon Steel 2000 PSI WP Stainless Steel	02 1/4 NPT	1 Reduced Port	Not Used if Carbon Steel
M	S Stainless Steel Series	5 Stainless Steel	9 3000 PSI WP Stainless Steel	05 1/2 NPT	2 Full Port	N Carbon Steel NACE Trim
-				07 3/4 NPT		
02				10 1 NPT		
3						
6						
2						
-						
N						

Note: For any valves not listed please consult factory.

The Balon Valve: Totally Advanced

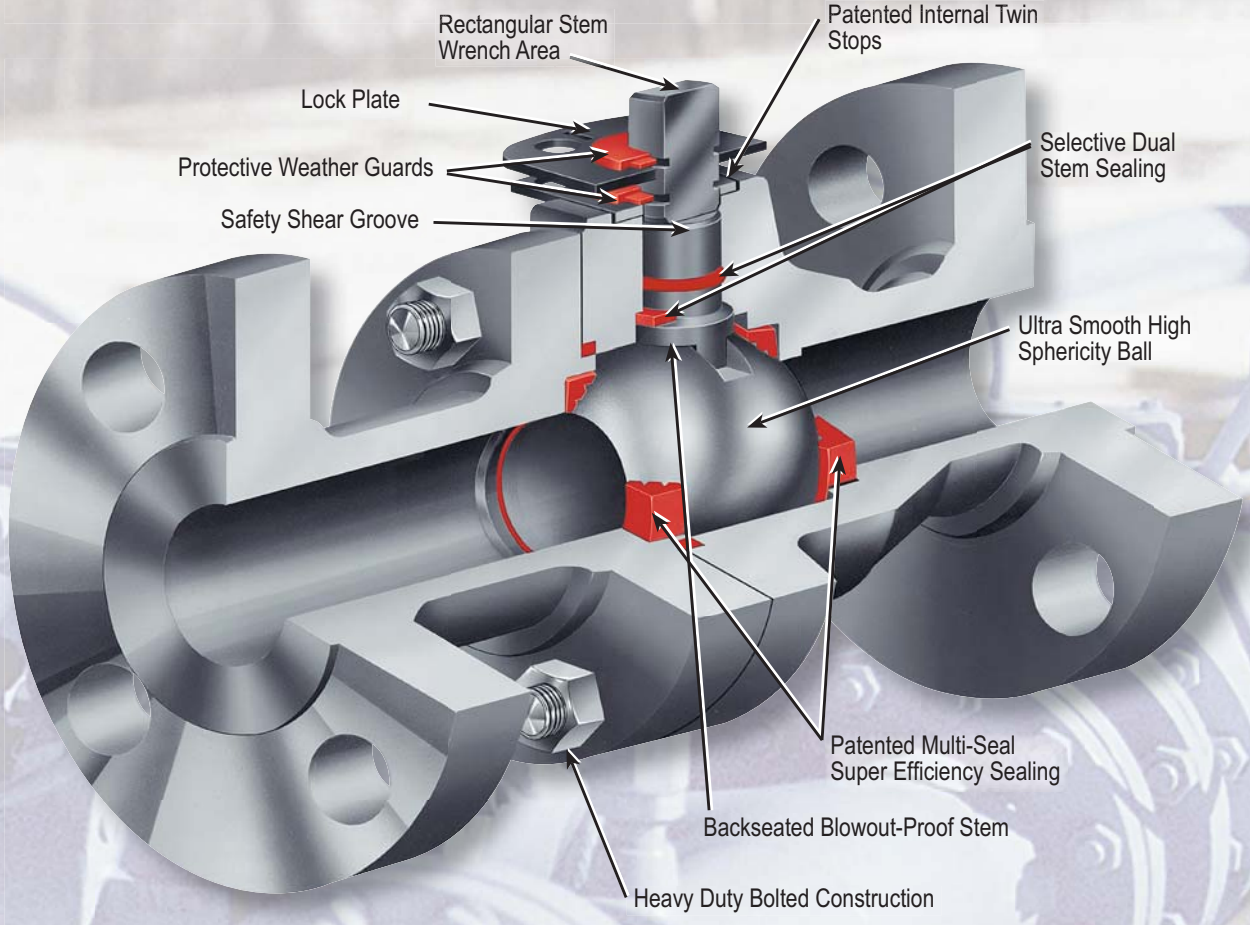

Unique Sealing Approach

The Balon Ball Valve is the culmination of many years of arduous design and development effort which has been focused on providing a better choice in ball valves. It is a refinement of features proven superior during the use of Balon Ball Valves in thousands of installations since 1965.

The multi-seal seat design has given impetus to the development of an overall valve which embodies several design improvements.

Backseated Stem

Stems are backseated and blowout proof. And, they provide metal-to-metal backup sealing in the event of a fire. This secondary metal-to-metal sealing is also provided internally behind the seat area.

Simplified Top Works

Bolts and glands and complicated stem assemblies are totally absent in the Balon valve to assure a simpler, more trouble-free valve. Hazards associated with bolted stem retainer and packing adjustment screws or bolts have been eliminated. Even the stops are internal and give dual precise stopping support during opening and closing. The stem area is grease-packed and protected by dual plastic weather guards to shield this vital area from external elements thereby eliminating the need for maintenance in the field.

Precise Manufacturing Control

Balon uses only the highest quality materials to assure the strength and uniformity necessary for applications where valves are used. To further enhance the overall operational superiority of the valve, all balls are machined in-house by Balon's spherical machining process which assures a consistently accurate spherical contour. They are superbly finished and polished. This high integrity finish, along with multi-seal's advanced sealing capability, provides the highest sealing efficiency and substantially reduced operating torque.

Multi-Seal: The Heart of the Valve

Notice the grooves. These grooves loosely receive any grit that might be present when the valve is closed. When the valve is opened, the foreign matter washes harmlessly away, where an ordinary valve seal could have been scored across its entire surface. Balon's seal is good as new.

Notice the seal rings. Not just one ring...a series. That's where Multi-Seal gets another big sealing edge over plain seals. The rings assure a concentrated seal, providing a bubble tight seal at high and low pressures, the tighter the seal...the better the shut-off.

Notice the tapered outer walls. These tapered walls on the Multi-Seal provide automatic seal-to-ball tensioning and self adjustment to wear. Much longer life and complete trouble-free performance is what you get. That's why you don't need a repair kit.

How long will the Balon Multi-Seal last? Our sales records of replacement seats indicate that most Balon valves sold have provided many years of trouble-free performance.

It has been tested on water pumped at 1,000 psi operating pressure with shock loading on shutoff up to 1,800 psi. After a million shutoffs, it still sealed bubble tight.





Ordinary Seals are damaged during shutoff. As flow is squeezed through fine-line opening, foreign particles are trapped. Complete shutoff grinds them into the seal. Results: premature damage, leakage, valve failure.



Multi-Seal receives particles loosely in grooves, to be washed harmlessly away during next opening. Valve seals bubble tight again, through repeated shutoffs.



Multi-Seal's series groove design features blunt-edge seal members for superior sealing efficiency. And the grooves form super-tight "fluid seal rings." Each seal member, working with the next one, creates exclusive "staged differential pressure sealing," for the tightest shutoff possible at all pressures.



Multi-Seal adjusts itself to wear! Outer walls are tapered to permit self-compensation to valve load and seal engagement demand. The design permits thrust loading to realign seat toward optimum sealing engagement.



The Multi-Seal design permits selection of seal material best suited to abrasive, high and low pressure applications in toughest services. And the relief pockets formed by the tapered walls, with the series grooving, provide self-compensation for swell to permit easy turning, long-life operation. It takes a better seal to make a better valve...and the best ball valve is a Balon.

An Advanced Concept in Stem Design

Balon has eliminated the need for grease fittings, lube channels, and regular lubrication.

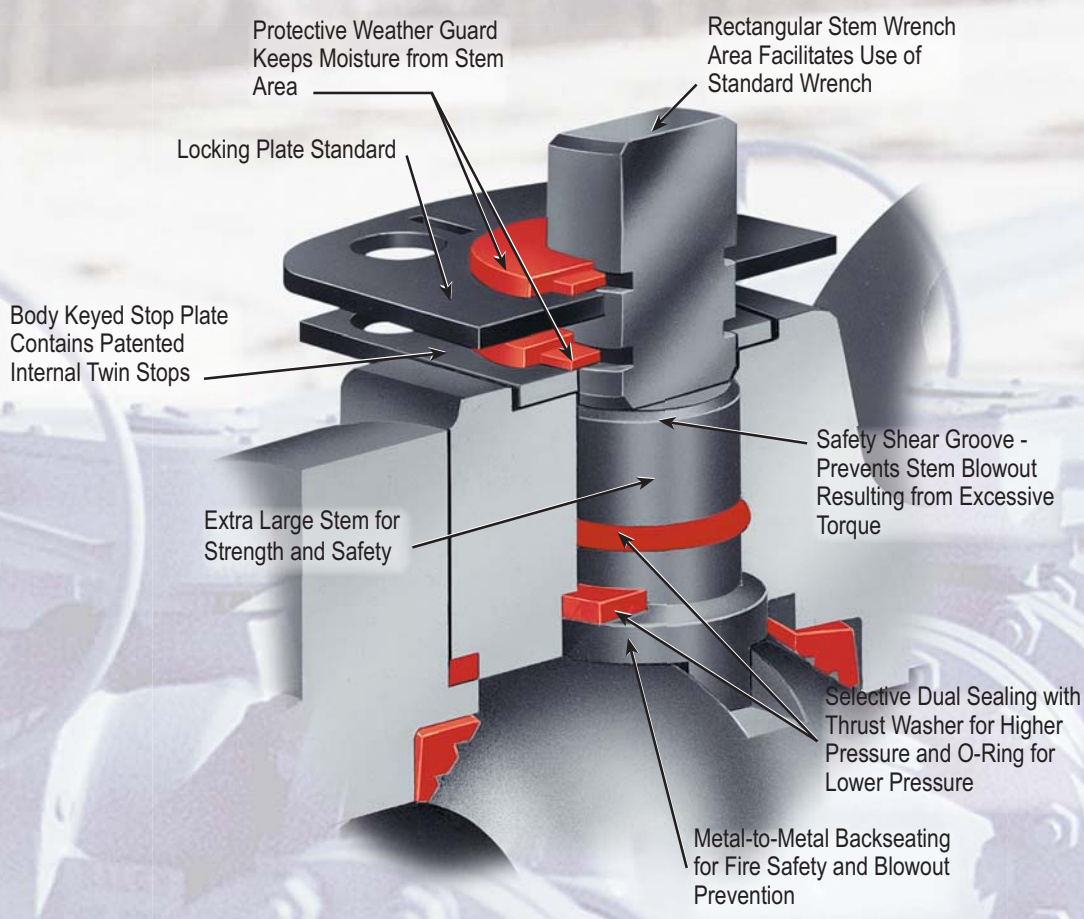

Simple Design

In keeping with Balon's philosophy of design which envisions simplification and improvement instead of improvement by complication, the Balon stem design solves many problems associated with the common stem design. The overall utility of the ball valve is related in no small way to the basic stem design. Certain standard designs originated early and were followed through by ball valve manufacturers in the years following the advent of the ball valve itself during World War II.

The Balon Stem: New Solutions For Old Problems

The Balon design represents the result of a total attack on specific problems associated with the outdated design. In the past, it has been a frequent practice to retain stems by use of external bolts or screws. Often these bolted arrangements also provided stem packing adjustment. The problem of leaking stems was amplified because of the complexity of the assembly itself.

The absence of backseating in early designs opened the way for stem blowout in the event of failure of the retaining assembly or as a result of forcible operation of the valve.

In many former designs, double O-rings were incorporated on the theory that should one O-ring fail to seal, then the second O-ring would perform the sealing job. However, higher pressures trapped between the O-rings often caused high operating torque and other operating problems.

A Combination of Improvements

As shown here, the Balon design is simple, yet solves these problems. The clean, functional design of the stem assembly represents dramatic improvement in many ways over conventional designs. As is true of the overall Balon approach, the Balon stem does not present just one special modification or design innovation. Rather, it represents the bringing together of interrelated improvements, resulting in total improvement and total superiority.

A More Complete Solution to Fire Safety

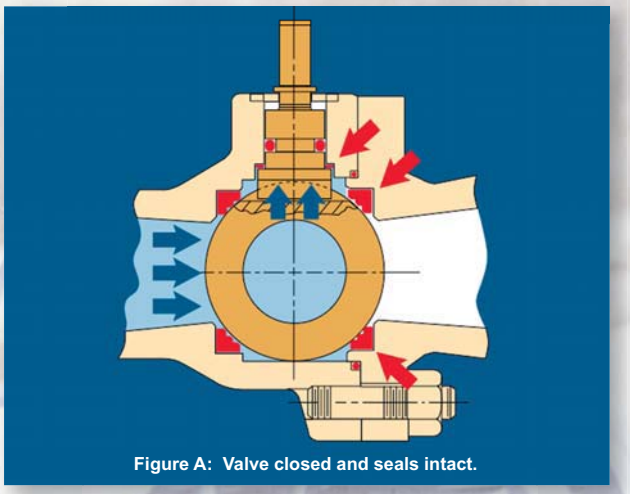

Figure A: Valve closed and seals intact.

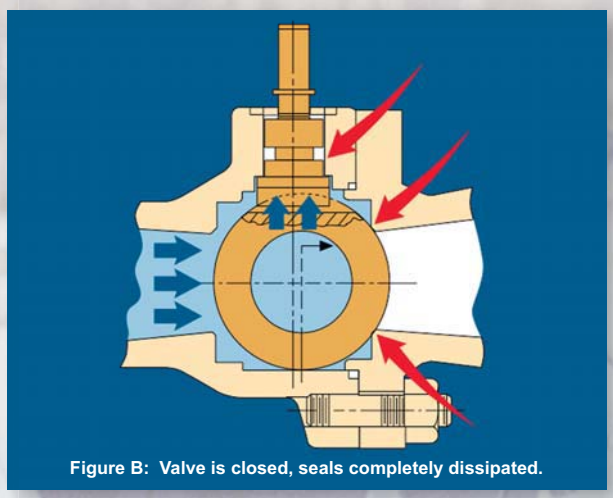

Figure B: Valve is closed, seals completely dissipated.

After many years of development and testing, Balon patented and introduced a ball valve that represented a dramatic turning point in valve safety. It was the first ball valve with the following:

- Backseated stem to prevent stem blowout
- Packless stem gland housing which eliminates stem adjustment mechanisms
- Stem shear groove to assure controlled stem damage above the backseat
- Full Metal spectrum fire safety for metal-to-metal secondary sealing at all potential leak points

Balon then encased these safety improvements in a rugged bolted body assembly capable of withstanding violent thrust loading and line stresses so common in high-pressure line applications.

Fire safety in ball valves has become a major consideration as more and more ball valves have been used in hazardous environments.

The Balon Ball Valve has been designed to provide maximum backup sealing in the event resilient seals are destroyed by heat or fire.

Controlled Spacing

The interior components of the valve, with seals intact, can be seen in Figure “A”. In the closed position the ball is held off of the secondary metal seat position.

The seat and seat pocket are made oversize in radial dimension, allowing close spacing of the ball and metal seat provision. In operation, with prime seals in place, this controlled spacing prevents damage to the surface finish of the ball.

It can also be seen that the stem is backseated, and with seals in place the primary stem seal holds the stem off of the metal shoulder machined in the valve body.

Secondary Stem Seal

In figure “B”, the seals have been fully dissipated, the ball has moved downstream onto the secondary metal seat, and the stem has been checked, metal-to-metal, against the inner shoulder.

As can be seen, the stem is free to move upward when subjected to a slight amount of pressure, onto the machined metal inner shoulder, thus substantially restricting any flow past the stem into the atmosphere.

Straight Ahead Ball Movement

The stem tongue is keyed into a linear milled slot, straight and perpendicular to the bore of the valve. In the closed position, the ball is free to move downstream onto the secondary metal seating, functioning at that moment as a simple ball check valve.

The ball itself is confined in the body with just enough vertical and horizontal clearance to assure free and easy operation. This keeps the ball in uniform alignment so that ball movement onto backseating - should it become necessary - is consistently on a straight course, without deflection up, down or sideways.

The valve may be positioned in either vertical or horizontal installations, and retain its secondary metal-to-metal sealing capability.

These very simple provisions are intended to provide full operational safety in our valves. Every attempt has been made in our design to produce a valve that is safe and affordable.

Balon Ball Valves have been successfully tested by an independent laboratory in accordance with API Standard 6FA “Fire Test for Resilient Seated Ball Valves”. Results of this testing are available on request from Balon’s headquarters.

Series LM Carbon Steel

- Lever Operated Ball Valve
- 3000 PSI WP
- ¼" Through 1"
- Bolted Body Construction



- Multi-Seal Seats
- 316 Stainless Steel Ball and Stem Standard
- Locking Device Standard
- Maintenance Free Sealing

Material Description

ITEM	PART NAME	MATERIAL (STANDARD)	MATERIAL (NACE)
1	Weather Guard	Polyethylene	Polyethylene
2	Stem Nut	Carbon Steel	Carbon Steel
3	Spacer	Carbon Steel	Carbon Steel
4	Lock Plate	Carbon Steel	Carbon Steel
5	Handle*	Carbon Steel	Carbon Steel
6	Stem Washer	Acetal	Acetal
7	Stop Pin	Carbon Steel	Carbon Steel
8	Stem O-Ring	Buna-N	Fluorocarbon
9	Stem Seal	TFE	TFE
10	Stem	316 Stainless Steel	316 Stainless Steel
11	Body	AISI 1215	AISI 1018
12	Ball Seat	Nylon (TFE Optional)	Nylon (TFE Optional)
13	Ball	316 Stainless Steel	316 Stainless Steel
14	Body Seal	Buna-N	Fluorocarbon
15	End Adapter	AISI 1215	AISI 1018
16	Body Bolts	ASTM A193 B7M	ASTM A193 B7M

** Handle and lock device are standard on all Series LM Ball Valves.*

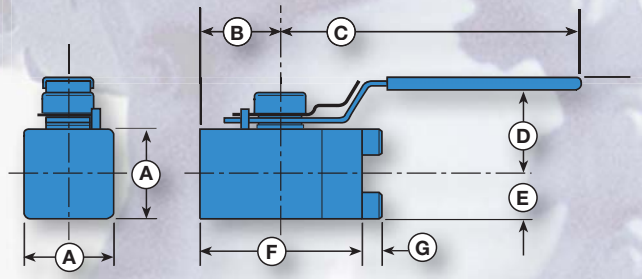

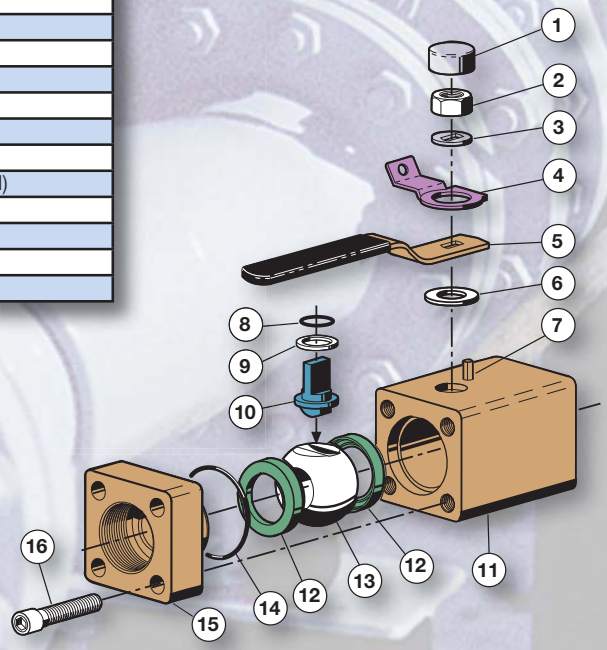

Dimensional Data

SIZE	CATALOG NUMBER		PORT	A	B	C	D	E	F	G	LBS.	Cv
	STANDARD TRIM 316 SS BALL & STEM	NACE TRIM 316 SS BALL & STEM										
.25x.37x.25	LM-02362	LM-02362-N	.37	1.25	1.12	3.5	1.62	.62	2.25	.25	1	-
.50x.37x.50	LM-05361	LM-05361-N	.37	1.25	1.12	3.5	1.62	.62	2.25	.25	1	6
.75x.75x.75	LM-07362	LM-07362-N	.75	2	1.81	4.87	2.25	1	3.62	.37	3.5	-
1x.75x1	LM-10361	LM-10361-N	.75	2	1.81	4.87	2.25	1	3.62	.37	3.5	30



Series S Carbon Steel

- Lever Operated Ball Valve
- To 5000 PSI WP
- 1" Through 2"
- Threaded Body Construction
  - Multi-Seal Seats
  - Fire Safe Design
  - NACE Valves Include 316 Stainless Steel Ball and Stem
  - Rugged Locking Device Standard
  - Maintenance Free Sealing

Material Description

ITEM	PART NAME	MATERIAL (STANDARD)	MATERIAL (NACE)
1	Handle*	Ductile Iron	Ductile Iron
2	Handle Bolt	Standard Hex Bolt	Standard Hex Bolt
3	Weather Guard	Polyethylene	Polyethylene
4	Lock Plate Retainer	Carbon Spring Steel	Carbon Spring Steel
5	Lock Plate	Carbon Steel	Carbon Steel
6	Dust Cover	Polyethylene	Polyethylene
7	Stop Plate Retainer	Carbon Spring Steel	Carbon Spring Steel
8	Stop Plate	Carbon Steel	Carbon Steel
9	Stem O-Ring	Buna-N	Fluorocarbon
10	Stem Seal	TFE	TFE
11	Stem	Carbon Steel	316 Stainless Steel
12	Ball	Carbon Steel Nickel Chrome Plated	316 Stainless Steel
13	Ball Seat	Nylon-Acetal (TFE Optional)	Nylon-Acetal (TFE Optional)
14	Body O-Ring	Buna-N	Fluorocarbon
15	End Adapter**	ASTM A216 Grade WCB/A105	ASTM A216 Grade WCB/A105
16	Body**	ASTM A216 Grade WCB/A105	ASTM A216 Grade WCB/A105

** Balon valves are designed to be operated with a standard open-end wrench. Handle is optional.*

*** Body and end adapter for material is AISI 4140 on 5000 PSI WP valve.*

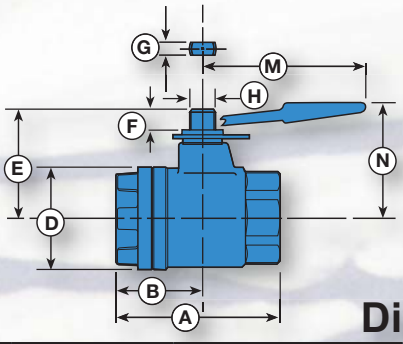

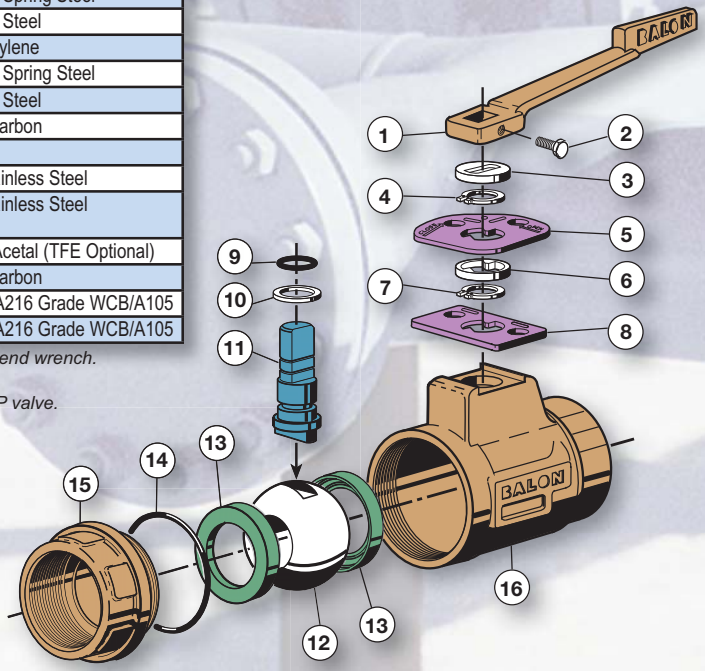

Dimensional Data

SIZE	CATALOG NUMBER		PORT	WP	A	B	D	E	F	G	H	M	N	LBS.	HANDLE	Cv
	STANDARD TRIM CARBON STEEL BALL & STEM	NACE TRIM 316 SS BALL & STEM														
1x1x1	1F-S03-SE	1F-S03N-SE	1	3000	4	2	2.75	2.37	.50	.340	.685	4.37	2	4.5	P-333-CS	-
2x1.5x2	2R-S93-SE	2R-S93N-SE	1.5	2500	5.5	2.75	4.25	3.62	.75	.434	.873	7.25	5	14	P-4128-DI	125
2x1.5x2	2R-S03-SE	2R-S03N-SE	1.5	3000	5.5	2.75	4.25	3.62	.75	.434	.873	7.25	5	14	P-4128-DI	125
2x1.5x2	2R-S5M-SE	2R-S5MN-SE	1.5	5000	5.5	2.75	4.25	3.62	.75	.434	.873	10.25	5.37	14	P-4125-DI	125
2x2x2	2F-S93-SE	2F-S93N-SE	2	2500	6	3.12	4.87	4.37	.75	.497	.998	10.25	5.37	20	P-4129-DI	-
2x2x2	2F-S03-SE	2F-S03N-SE	2	3000	6	3.12	4.87	4.37	.75	.497	.998	10.25	5.37	20	P-4129-DI	-

Series F Carbon Steel

- Lever Operated Ball Valve
- To 5000 PSI WP
- 1" Through 4"
- Bolted Body Construction

- Multi-Seal Seats
- Bolted Body Protects Against End Adapter Blowout
- Fire Safe Design
- NACE Valves Include 316 Stainless Steel Ball and Stem
- Rugged Locking Device Standard
- Maintenance Free Sealing



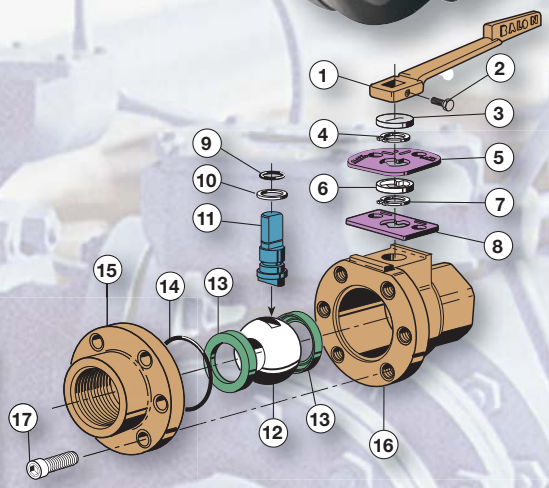

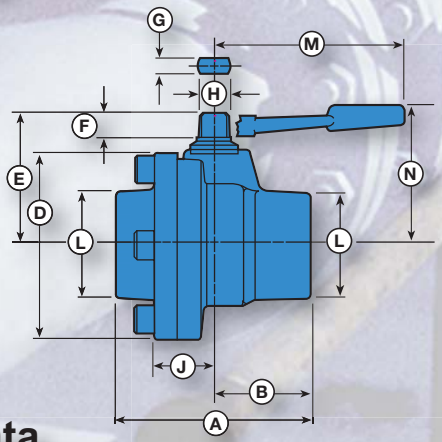

Material Description

ITEM	PART NAME	MATERIAL (STANDARD)	MATERIAL (NACE)
1	Handle*	Ductile Iron	Ductile Iron
2	Handle Bolt	Standard Hex Bolt	Standard Hex Bolt
3	Weather Guard	Polyethylene	Polyethylene
4	Lock Plate Retainer	Carbon Spring Steel	Carbon Spring Steel
5	Lock Plate	Carbon Steel	Carbon Steel
6	Dust Cover	Polyethylene	Polyethylene
7	Stop Plate Retainer	Carbon Spring Steel	Carbon Spring Steel
8	Stop Plate	Carbon Steel	Carbon Steel
9	Stem O-Ring	Buna-N	Fluorocarbon
10	Stem Seal	TFE	TFE
11	Stem	Carbon Steel	316 Stainless Steel
12	Ball	Carbon Steel Nickel Chrome Plated	316 Stainless Steel
13	Ball Seat	Nylon-Acetal (TFE Optional)	Nylon-Acetal (TFE Optional)
14	Body O-Ring	Buna-N	Fluorocarbon
15	End Adapter	ASTM A105	ASTM A105
16	Body	ASTM A105	ASTM A105
17	Body Bolts	ASTM A193 B7M	ASTM A193 B7M

** Balon valves are designed to be operated with a standard open-end wrench. Handle is optional.*

Dimensional Data

SIZE	CATALOG NUMBER		PORT	WP	A	B	D	E	F	G	H	J	L	M	N	LBS.	HANDLE	Cv
	STANDARD TRIM CARBON STEEL BALL & STEM	NACE TRIM 316 SS BALL & STEM																
1x1x1	1F-F93-SE	1F-F93N-SE	1	2500	3.87	1.93	3.37	2.37	.50	.340	.685	1.12	1.87	4.37	2	4.3	P-333-CS	-
1x1x1	1F-F03-SE	1F-F03N-SE	1	3000	3.87	1.93	3.37	2.37	.50	.340	.685	1.12	1.87	4.37	2	4	P-333-CS	-
1.5x1.5x1.5	1.5F-F93-SE	1.5F-F93N-SE	1.5	2500	5.25	2.62	5.12	3.62	.75	.434	.873	1.62	2.50	7.25	5	12.8	P-4128-DI	-
2x1.5x2	2R-F93-SE	2R-F93N-SE	1.5	2500	5.50	2.75	5.12	3.62	.75	.434	.873	1.62	3	7.25	5	13.5	P-4128-DI	125
2x1.5x2	2R-F03-SE	2R-F03N-SE	1.5	3000	5.50	2.75	5.12	3.62	.75	.434	.873	1.62	3	7.25	5	13	P-4128-DI	125
2x1.5x2	2R-F5M-SE	2R-F5MN-SE	1.5	5000	6	3	6	3.62	.75	.434	.873	1.75	3.25	10.25	5.37	20	P-4125-DI	125
2x2x2	2F-F93-SE	2F-F93N-SE	2	2000	5.75	2.87	6.12	4.37	.87	.497	.998	2	3.12	10.25	5.37	20	P-4129-DI	-
2x2x2	2F-F03-SE	2F-F03N-SE	2	2500	5.75	2.87	6.12	4.37	.87	.497	.998	2	3.12	10.25	5.37	20	P-4129-D	-
3x2x3	3R-F93-SE	3R-F93N-SE	2	2000	7.62	3.81	6.87	4.37	.87	.497	.998	2.06	4.25	10.25	5.37	32	P-4129-DI	180
3x3x3	3F-F63-SE	3F-F63N-SE	3	1500	8.37	4.18	8	5.75	1.06	.747	1.373	2.50	4.25	20	6.75	46	P-4127-DI	-
4x3x4	4R-F63-SE	4R-F63N-SE	3	1500	8.87	4.43	8	5.75	1.06	.747	1.375	2.43	5.25	20	6.75	47	P-4127-DI	500



Series F Carbon Steel

- Lever Operated Ball Valve
- ANSI Class 150 (285 PSI WP)
- 2" Through 6"
- Bolted Body Construction

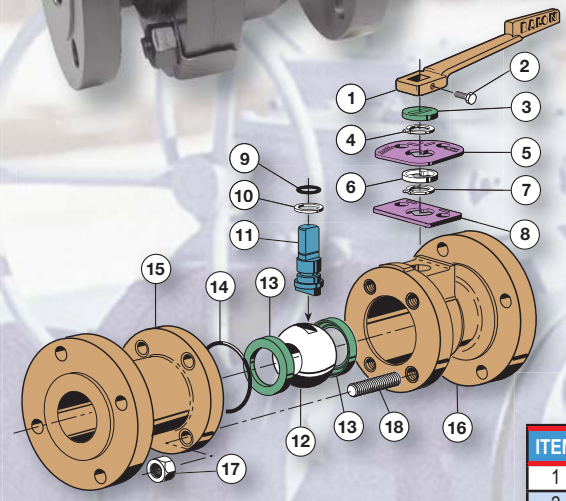

- Multi-Seal Seats
- Fire Safe Design
- NACE Valves Include 316 Stainless Steel Ball and Stem
- Rugged Locking Device Standard
- Maintenance Free Sealing

Note: Most Series F flanged end valves are available for low temperature service. Consult factory for price and availability.

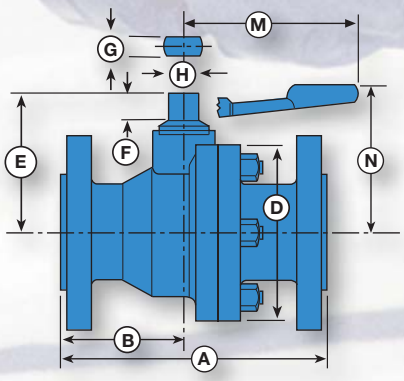

Material Description

ITEM	PART NAME	MATERIAL (STANDARD)	MATERIAL (NACE)
1	Handle*	Ductile Iron	Ductile Iron
2	Handle Bolt	Standard Hex Bolt	Standard Hex Bolt
3	Weather Guard	Polyethylene	Polyethylene
4	Lock Plate Retainer	Carbon Spring Steel	Carbon Spring Steel
5	Lock Plate	Carbon Steel	Carbon Steel
6	Dust Cover	Polyethylene	Polyethylene
7	Stop Plate Retainer	Carbon Spring Steel	Carbon Spring Steel
8	Stop Plate	Carbon Steel	Carbon Steel
9	Stem O-Ring	Buna-N	Fluorocarbon
10	Stem Seal	TFE	TFE
11	Stem	Carbon Steel	316 Stainless Steel
12	Ball	Carbon Steel Nickel Chrome Plated	316 Stainless Steel
13	Ball Seat	Nylon (TFE Optional)	Nylon (TFE Optional)
14	Body O-Ring	Buna-N	Fluorocarbon
15	End Adapter	ASTM A216 GR WCB/A105	ASTM A216 GR WCB/A105
16	Body	ASTM A216 GR WCB/A105	ASTM A216 GR WCB/A105
17	Nuts	ASTM A194 2H	ASTM A194 2HM
18	Body Bolts	ASTM A193 B7	ASTM A193 B7M

** Balon valves are designed to be operated with a standard open-end wrench. Handle is optional.*

Dimensional Data

SIZE	CATALOG NUMBER		PORT	A	B	D	E	F	G	H	M	N	LBS.	HANDLE	Cv
	STANDARD TRIM CARBON STEEL BALL & STEM	NACE TRIM 316 SS BALL & STEM													
2x1.5x2	2R-F13	2R-F13N	1.5	7	3.25	5	3.62	.75	.434	.873	7.25	5	21.5	P-4128-DI	125
2x2x2	2F-F13	2F-F13N	2	7	2.75	6	4.37	.87	.497	.998	10.25	5.37	28	P-4129-DI	-
3x2x3	3R-F13	3R-F13N	2	8	3	6	4.37	.87	.497	.998	10.25	5.37	40	P-4129-DI	200
3x3x3	3F-F13	3F-F13N	3	8	3.56	7.50	5.75	1.06	.747	1.373	20	6.75	54	P-4127-DI	-
4x3x4	4R-F13	4R-F13N	3	9	4.06	7.87	5.75	1.06	.747	1.373	20	6.75	70	P-4127-DI	525
4x4x4	4F-F13	4F-F13N	4	9	4.06	9	6.37	1.06	.747	1.373	20	7.37	80	P-4127-DI	-
6x4x6	6R-F13	6R-F13N	4	10.5	4.81	9.37	6.37	1.06	.747	1.373	20	7.37	102	P-4127-DI	800

Series F Carbon Steel

- **Gear Operated Ball Valve**
- **ANSI Class 150 (285 PSI WP)**
- **6" Through 10"**
- **Bolted Body Construction**



- Exclusive Balon Gearbox
  - ✔ Ductile Housing for Reduced Risk of Damage
  - ✔ Stainless Steel Input Shaft and Directional Indicator Standard
  - ✔ Integral Locking Device Standard
- Multi-Seal Seats
- Fire Safe Design
- NACE Valves Include 316 Stainless Steel Ball and Stem
- Maintenance Free Sealing

Note: Most Series F flanged end valves are available for low temperature service. Consult factory for price and availability.

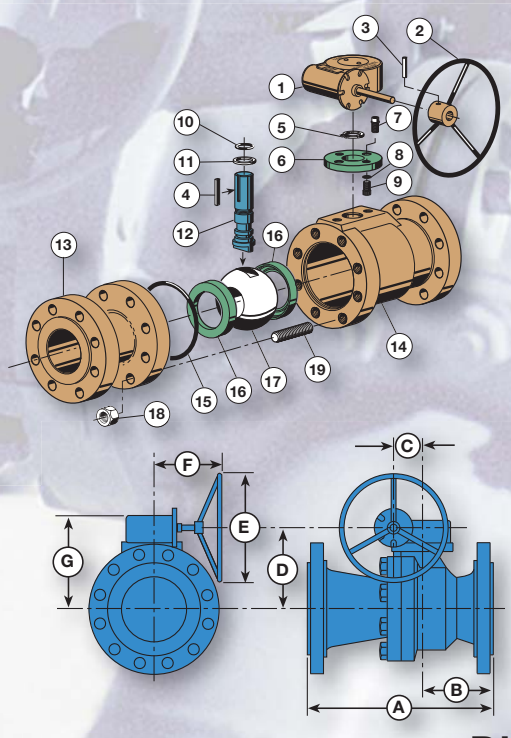

Material Description

ITEM	PART NAME	MATERIAL (STANDARD)	MATERIAL (NACE)
1	Gear Operator	Ductile Iron	Ductile Iron
2	Hand Wheel	Carbon Steel	Carbon Steel
3	Drive Pin	Carbon Spring Steel	Carbon Spring Steel
4	Stem Key	Steel Key Stock	Steel Key Stock
5	Stem Retainer Ring	Carbon Spring Steel	Carbon Spring Steel
6	Mounting Plate	Ductile Iron	Ductile Iron
7	Mounting Plate Screws	Alloy Steel	Alloy Steel
8	Lock Washers	Carbon Steel	Carbon Steel
9	Mounting Screws	Alloy Steel	Alloy Steel
10	Stem O-Ring	Buna-N	Fluorocarbon
11	Stem Seal	TFE	TFE
12	Stem	Carbon Steel	316 Stainless Steel
13	End Adapter	ASTM A216 GR WCB/A105	ASTM A216 GR WCB/A105
14	Body	ASTM A216 GR WCB/A105	ASTM A216 GR WCB/A105
15	Body O-Ring	Buna-N	Fluorocarbon
16	Ball Seats	Nylon (TFE Optional)	Nylon (TFE Optional)
17	Ball	Carbon Steel Nickel Chrome Plated	316 Stainless Steel
18	Nuts	ASTM A194 2H	ASTM A194 2HM
19	Body Bolts	ASTM A193 B7	ASTM A193 B7M

Dimensional Data

SIZE	CATALOG NUMBER		PORT	A	B	C	D	E	F	G	LBS.	Cv
	STANDARD TRIM CARBON STEEL BALL & STEM	NACE TRIM 316 SS BALL & STEM		RF	RF							
6x6x6	6F-F13	6F-F13N	6	10.5	4.50	4	9.75	13	9	11.19	230	-
8x6x8	8R-F13	8R-F13N	6	11.5	5.12	4	9.75	13	9	11.19	285	2200
8x8x8	8F-F13	8F-F13N	8	18	8	5.25	12	20	11.5	13.75	520	-
10x8x10	10R-F13	10R-F13N	8	21	9	5.25	12	20	11.5	13.75	580	4200



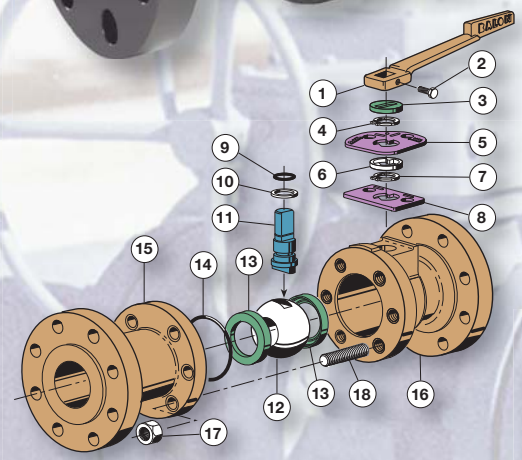

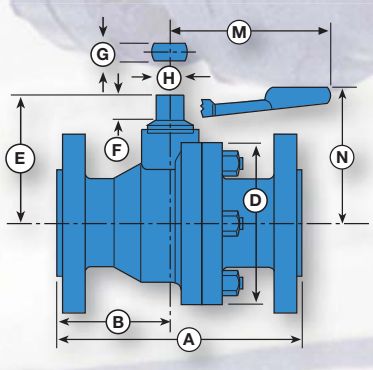

Series F Carbon Steel

- Lever Operated Ball Valve
- ANSI Class 300 (740 PSI WP)
- 2" Through 6"
- Bolted Body Construction

- Multi-Seal Seats
- Fire Safe Design
- NACE Valves Include 316 Stainless Steel Ball and Stem
- Rugged Locking Device Standard
- Maintenance Free Sealing

Note: Most Series F flanged end valves are available for low temperature service. Consult factory for price and availability.

Material Description

ITEM	PART NAME	MATERIAL (STANDARD)	MATERIAL (NACE)
1	Handle*	Ductile Iron	Ductile Iron
2	Handle Bolt	Standard Hex Bolt	Standard Hex Bolt
3	Weather Guard	Polyethylene	Polyethylene
4	Lock Plate Retainer	Carbon Spring Steel	Carbon Spring Steel
5	Lock Plate	Carbon Steel	Carbon Steel
6	Dust Cover	Polyethylene	Polyethylene
7	Stop Plate Retainer	Carbon Spring Steel	Carbon Spring Steel
8	Stop Plate	Carbon Steel	Carbon Steel
9	Stem O-Ring	Buna-N	Fluorocarbon
10	Stem Seal	TFE	TFE
11	Stem	Carbon Steel	316 Stainless Steel
12	Ball	Carbon Steel Nickel Chrome Plated	316 Stainless Steel
13	Ball Seat	Nylon (TFE Optional)	Nylon (TFE Optional)
14	Body O-Ring	Buna-N	Fluorocarbon
15	End Adapter	ASTM A216 GR WCB/A105	ASTM A216 GR WCB/A105
16	Body	ASTM A216 GR WCB/A105	ASTM A216 GR WCB/A105
17	Nuts	ASTM A194 2H	ASTM A194 2HM
18	Body Bolts	ASTM A193 B7	ASTM A193 B7M

** Balon valves are designed to be operated with a standard open-end wrench. Handle is optional.*

Dimensional Data

SIZE	CATALOG NUMBER		PORT	A	B	D	E	F	G	H	M	N	LBS.	HANDLE	Cv
	STANDARD TRIM CARBON STEEL BALL & STEM	NACE TRIM 316 SS BALL & STEM													
2x1.5x2	2R-F33	2R-F33N	1.5	8.50	4	5	3.62	.75	.434	.873	7.25	5	29	P-4128-DI	125
2x2x2	2F-F33	2F-F33N	2	8.50	3.75	6.50	4.37	.87	.497	.998	10.25	5.37	36	P-4129-DI	-
3x2x3	3R-F33	3R-F33N	2	11.12	4.56	6.50	4.37	.87	.497	.998	10.25	5.37	60	P-4129-DI	200
3x3x3	3F-F33	3F-F33N	3	11.12	5.12	8	5.75	1.06	.747	1.373	20	6.75	76	P-4127-DI	-
4x3x4	4R-F33	4R-F33N	3	12	5.56	8	5.75	1.06	.747	1.373	20	6.75	98	P-4127-DI	525
4x4x4	4F-F33	4F-F33N	4	12	5.50	9.37	6.37	1.06	.747	1.373	20	7.37	128	P-4127-DI	-
6x4x6	6R-F33	6R-F33N	4	15.87	7.44	10	6.37	1.06	.747	1.373	20	7.37	196	P-4127-DI	800

Series F Carbon Steel

- Gear Operated Ball Valve
- ANSI Class 300 (740 PSI WP)
- 6" Through 8"
- Bolted Body Construction



- Exclusive Balon Gearbox
  - ✔ Ductile Housing for Reduced Risk of Damage
  - ✔ Stainless Steel Input Shaft and Directional Indicator Standard
  - ✔ Integral Locking Device Standard
- Multi-Seal Seats
- Fire Safe Design
- NACE Valves Include 316 Stainless Steel Ball and Stem
- Maintenance Free Sealing

Note: Most Series F flanged end valves are available for low temperature service. Consult factory for price and availability.

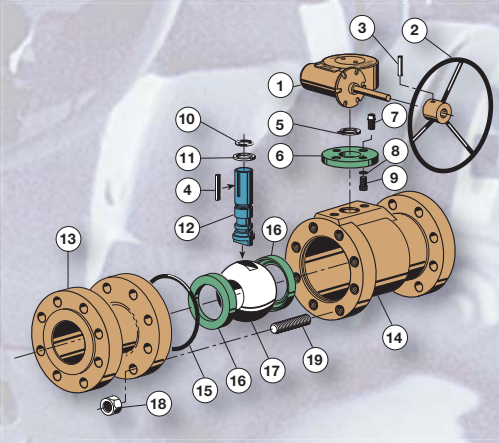

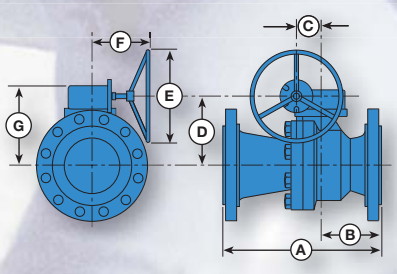

Material Description

ITEM	PART NAME	MATERIAL (STANDARD)	MATERIAL (NACE)
1	Gear Operator	Ductile Iron	Ductile Iron
2	Hand Wheel	Carbon Steel	Carbon Steel
3	Drive Pin	Carbon Spring Steel	Carbon Spring Steel
4	Stem Key	Steel Key Stock	Steel Key Stock
5	Stem Retainer Ring	Carbon Spring Steel	Carbon Spring Steel
6	Mounting Plate	Ductile Iron	Ductile Iron
7	Mounting Plate Screws	Alloy Steel	Alloy Steel
8	Lock Washers	Carbon Steel	Carbon Steel
9	Mounting Screws	Alloy Steel	Alloy Steel
10	Stem O-Ring	Buna-N	Fluorocarbon
11	Stem Seal	TFE	TFE
12	Stem	Carbon Steel	316 Stainless Steel
13	End Adapter	ASTM A216 GR WCB/A105	ASTM A216 GR WCB/A105
14	Body	ASTM A216 GR WCB/A105	ASTM A216 GR WCB/A105
15	Body O-Ring	Buna-N	Fluorocarbon
16	Ball Seats	Nylon (TFE Optional)	Nylon (TFE Optional)
17	Ball	Carbon Steel Nickel Chrome Plated	316 Stainless Steel
18	Nuts	ASTM A194 2H	ASTM A194 2HM
19	Body Bolts	ASTM A193 B7	ASTM A193 B7M

Dimensional Data

SIZE	CATALOG NUMBER		PORT	A	B	C	D	E	F	G	LBS.	Cv
	STANDARD TRIM CARBON STEEL BALL & STEM	NACE TRIM 316 SS BALL & STEM		RF	RF							
6x6x6	6F-F33	6F-F33N	6	15.87	7.38	4	9.75	13	9	11.19	307	-
8x6x8	8R-F33	8R-F33N	6	16.50	7.69	4	9.75	13	9	11.19	409	2200

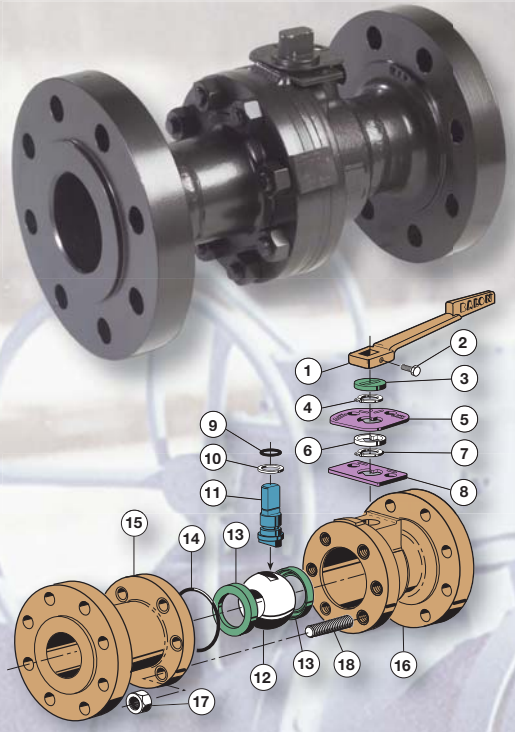

Series F Carbon Steel

- Lever Operated Ball Valve
- ANSI Class 600 (1480 PSI WP)
- 2" Through 4"
- Bolted Body Construction

- Multi-Seal Seats
- Fire Safe Design
- NACE Valves Include 316 Stainless Steel Ball and Stem
- Rugged Locking Device Standard
- Maintenance Free Sealing

Note: Most Series F flanged end valves are available for low temperature service. Consult factory for price and availability.

Material Description

ITEM	PART NAME	MATERIAL (STANDARD)	MATERIAL (NACE)
1	Handle*	Ductile Iron	Ductile Iron
2	Handle Bolt	Standard Hex Bolt	Standard Hex Bolt
3	Weather Guard	Polyethylene	Polyethylene
4	Lock Plate Retainer	Carbon Spring Steel	Carbon Spring Steel
5	Lock Plate	Carbon Steel	Carbon Steel
6	Dust Cover	Polyethylene	Polyethylene
7	Stop Plate Retainer	Carbon Spring Steel	Carbon Spring Steel
8	Stop Plate	Carbon Steel	Carbon Steel
9	Stem O-Ring	Buna-N	Fluorocarbon
10	Stem Seal	TFE	TFE
11	Stem	Carbon Steel	316 Stainless Steel
12	Ball	Carbon Steel Nickel Chrome Plated	316 Stainless Steel
13	Ball Seat	Nylon (TFE Optional)	Nylon (TFE Optional)
14	Body O-Ring	Buna-N	Fluorocarbon
15	End Adapter	ASTM A216 GR WCB/A105	ASTM A216 GR WCB/A105
16	Body	ASTM A216 GR WCB/A105	ASTM A216 GR WCB/A105
17	Nuts	ASTM A194 2H	ASTM A194 2HM
18	Body Bolts	ASTM A193 B7	ASTM A193 B7M

** Balon valves are designed to be operated with a standard open-end wrench. Handle is optional.*

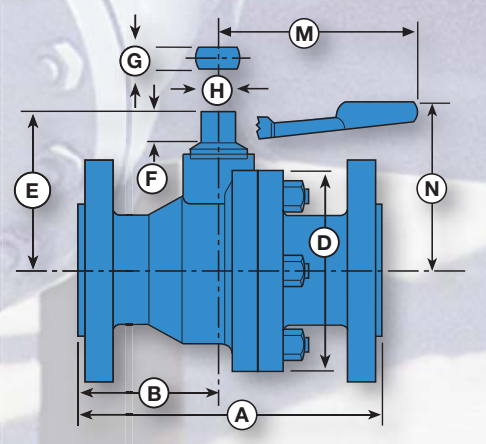

Dimensional Data

SIZE	CATALOG NUMBER		PORT	A		B		D	E	F	G	H	M	N	LBS.	HANDLE	Cv
	STANDARD TRIM CARBON STEEL BALL & STEM	NACE TRIM 316 SS BALL & STEM		RF	RTJ	RF	RTJ										
2x1.5x2	2R-F63	2R-F63N	1.5	11.5	11.62	5.06	5.12	5.37	3.62	.75	.434	.873	7.25	5	37	P-4128-DI	125
2x2x2	2F-F63	2F-F63N	2	11.5	11.62	4.75	4.81	6.50	4.37	.87	.497	.998	10.25	5.37	48	P-4129-DI	-
3x2x3	3R-F63	3R-F63N	2	14	14.12	5.75	5.81	6.62	4.37	.87	.497	.998	10.25	6.75	69	P-4129-DI	200
3x3x3	3F-F63	3F-F63N	3	14	14.12	5.50	5.56	8	5.75	1.06	.747	1.373	20	6.75	90	P-4127-DI	-
4x3x4	4R-F63	4R-F63N	3	17	17.12	6.87	6.93	8.62	5.75	1.06	.747	1.373	20	6.75	154	P-4127-DI	525

Series F Carbon Steel

- **Gear Operated Ball Valve**
- **ANSI Class 600 (1480 PSI WP)**
- **4" Through 8"**
- **Bolted Body Construction**



- Exclusive Balon Gearbox
  - ✔ Ductile Housing for Reduced Risk of Damage
  - ✔ Stainless Steel Input Shaft and Directional Indicator Standard
  - ✔ Integral Locking Device Standard
- Multi-Seal Seats
- Fire Safe Design
- NACE Valves Include 316 Stainless Steel Ball and Stem
- Maintenance Free Sealing

Note: Most Series F flanged end valves are available for low temperature service. Consult factory for price and availability.

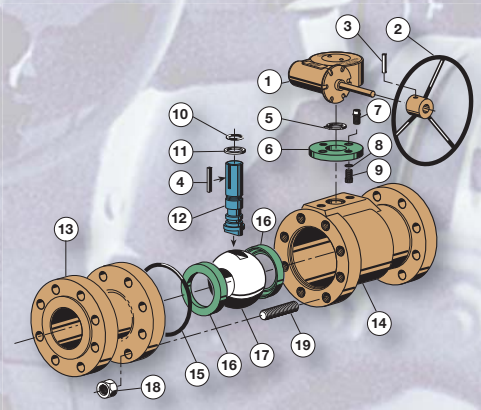

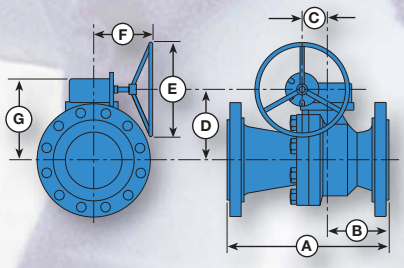

Material Description

ITEM	PART NAME	MATERIAL (STANDARD)	MATERIAL (NACE)
1	Gear Operator	Ductile Iron	Ductile Iron
2	Hand Wheel	Carbon Steel	Carbon Steel
3	Drive Pin	Carbon Spring Steel	Carbon Spring Steel
4	Stem Key	Steel Key Stock	Steel Key Stock
5	Stem Retainer Ring	Carbon Spring Steel	Carbon Spring Steel
6	Mounting Plate	Ductile Iron	Ductile Iron
7	Mounting Plate Screws	Alloy Steel	Alloy Steel
8	Lock Washers	Carbon Steel	Carbon Steel
9	Mounting Screws	Alloy Steel	Alloy Steel
10	Stem O-Ring	Buna-N	Fluorocarbon
11	Stem Seal	TFE	TFE
12	Stem	Carbon Steel	316 Stainless Steel
13	End Adapter	ASTM A216 GR WCB/A105	ASTM A216 GR WCB/A105
14	Body	ASTM A216 GR WCB/A105	ASTM A216 GR WCB/A105
15	Body O-Ring	Buna-N	Fluorocarbon
16	Ball Seats	Nylon (TFE Optional)	Nylon (TFE Optional)
17	Ball	Carbon Steel Nickel Chrome Plated	316 Stainless Steel
18	Nuts	ASTM A194 2H	ASTM A194 2HM
19	Body Bolts	ASTM A193 B7	ASTM A193 B7M

Dimensional Data

SIZE	CATALOG NUMBER		PORT	A		B		C	D	E	F	G	LBS.	Cv
	STANDARD TRIM CARBON STEEL BALL & STEM	NACE TRIM 316 SS BALL & STEM		RF	RTJ	RF	RTJ							
4x4x4	4F-F63	4F-F63N	4	17	17.12	7.37	7.43	3	8.19	13	9	9.69	238	-
6x4x6	6R-F63	6R-F63N	4	22	22.12	9.88	9.25	3	8.19	13	9	9.69	340	800
6x6x6	6F-F63	6F-F63N	6	22	22.12	8.62	8.68	4	9.75	20	11	11.19	440	-
8x6x8	8R-F63	8R-F63N	6	26	26.12	10.62	10.68	4	9.75	20	11	11.19	570	2200

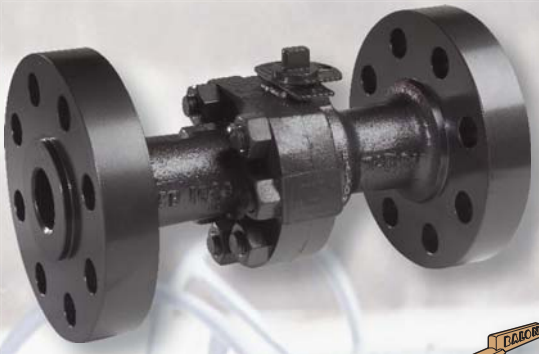

Series F Carbon Steel

- Lever Operated Ball Valve
- ANSI Class 900 (2220 PSI WP)
- 2"
- Bolted Body Construction

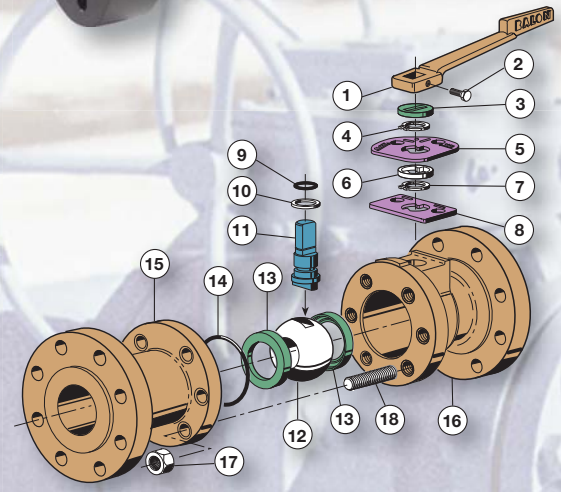

- Multi-Seal Seats
- Fire Safe Design
- NACE Valves Include 316 Stainless Steel Ball and Stem
- Rugged Locking Device Standard
- Maintenance Free Sealing

Note: Most Series F flanged end valves are available for low temperature service. Consult factory for price and availability.

Material Description

ITEM	PART NAME	MATERIAL (STANDARD)	MATERIAL (NACE)
1	Handle*	Ductile Iron	Ductile Iron
2	Handle Bolt	Standard Hex Bolt	Standard Hex Bolt
3	Weather Guard	Polyethylene	Polyethylene
4	Lock Plate Retainer	Carbon Spring Steel	Carbon Spring Steel
5	Lock Plate	Carbon Steel	Carbon Steel
6	Dust Cover	Polyethylene	Polyethylene
7	Stop Plate Retainer	Carbon Spring Steel	Carbon Spring Steel
8	Stop Plate	Carbon Steel	Carbon Steel
9	Stem O-Ring	Buna-N	Fluorocarbon
10	Stem Seal	TFE	TFE
11	Stem	Carbon Steel	316 Stainless Steel
12	Ball	Carbon Steel Nickel Chrome Plated	316 Stainless Steel
13	Ball Seat	Nylon (TFE Optional)	Nylon (TFE Optional)
14	Body O-Ring	Buna-N	Fluorocarbon
15	End Adapter	ASTM A216 GR WCB/A105	ASTM A216 GR WCB/A105
16	Body	ASTM A216 GR WCB/A105	ASTM A216 GR WCB/A105
17	Nuts	ASTM A194 2H	ASTM A194 2HM
18	Body Bolts	ASTM A193 B7	ASTM A193 B7M

** Balon valves are designed to be operated with a standard open-end wrench. Handle is optional.*

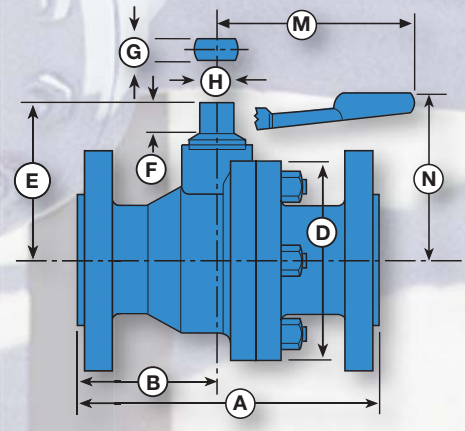

Dimensional Data

SIZE	CATALOG NUMBER		PORT	A		B		D	E	F	G	H	M	N	LBS.	HANDLE	Cv
	STANDARD TRIM CARBON STEEL BALL & STEM	NACE TRIM 316 SS BALL & STEM		RF	RTJ	RF	RTJ										
2x1.5x2	2R-F93	2R-F93N	1.5	14.50	14.62	6.31	6.37	6.25	3.62	.75	.434	.873	7.25	5	75	P-1104-DI	125
2x2x2	2F-F93	2F-F93N	2	14.50	14.62	6	6.06	7	4.37	.87	.497	.998	10.25	5.37	81	P-1105-DI	-

Series F Carbon Steel

- Lever Operated Ball Valve
- ANSI Class 1500 (3705 PSI WP)
- 2"
- Bolted Body Construction

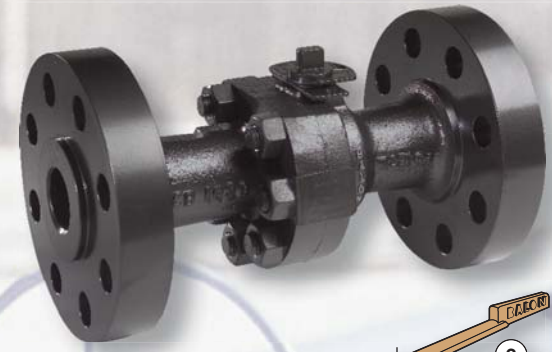

- Multi-Seal Seats
- Fire Safe Design
- NACE Valves Include 316 Stainless Steel Ball and Stem
- Rugged Locking Device Standard
- Maintenance Free Sealing

Note: Most Series F flanged end valves are available for low temperature service. Consult factory for price and availability.

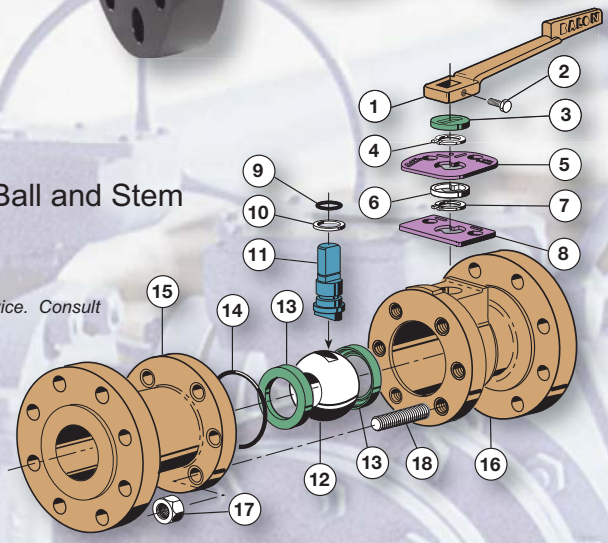

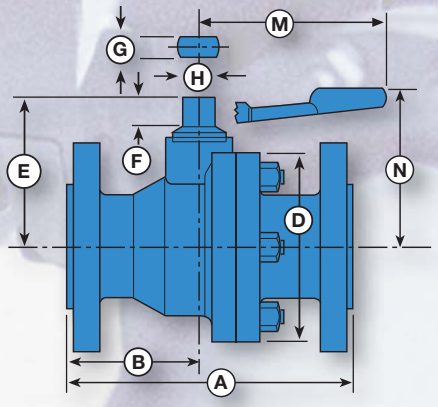

Material Description

ITEM	PART NAME	MATERIAL (STANDARD)	MATERIAL (NACE)
1	Handle*	Ductile Iron	Ductile Iron
2	Handle Bolt	Standard Hex Bolt	Standard Hex Bolt
3	Weather Guard	Polyethylene	Polyethylene
4	Lock Plate Retainer	Carbon Spring Steel	Carbon Spring Steel
5	Lock Plate	Carbon Steel	Carbon Steel
6	Dust Cover	Polyethylene	Polyethylene
7	Stop Plate Retainer	Carbon Spring Steel	Carbon Spring Steel
8	Stop Plate	Carbon Steel	Carbon Steel
9	Stem O-Ring	Buna-N	Fluorocarbon
10	Stem Seal	TFE	TFE
11	Stem	Carbon Steel	316 Stainless Steel
12	Ball	Carbon Steel Nickel Chrome Plated	316 Stainless Steel
13	Ball Seat	Acetal	Acetal
14	Body O-Ring	Buna-N	Fluorocarbon
15	End Adapter	ASTM A216 GR WCB/A105	ASTM A216 GR WCB/A105
16	Body	ASTM A216 GR WCB/A105	ASTM A216 GR WCB/A105
17	Nuts	ASTM A194 2H	ASTM A194 2HM
18	Body Bolts	ASTM A193 B7	ASTM A193 B7M

** Balon valves are designed to be operated with a standard open-end wrench. Handle is optional.*

Dimensional Data

SIZE	CATALOG NUMBER		PORT	A		B		D	E	F	G	H	M	N	LBS.	HANDLE	Cv
	STANDARD TRIM CARBON STEEL BALL & STEM	NACE TRIM 316 SS BALL & STEM		RF	RTJ	RF	RTJ										
2x1.5x2	2R-F03	2R-F03N	1.5	14.5	14.62	6.31	6.37	6.25	3.62	.75	.434	.873	7.25	5	75	P-1104-DI	125

Series US Weld X Flange Carbon Steel



- Weld X Flange Ball Valve
- ANSI Class 150 (285 PSI WP)
- 2" Through 4"

- Multi-Seal Seats
- True Full Port for Hot Tap Service
- Heat Dissipating Fins for Protection of Seats and Seals During Welding
- Rugged Stainless Steel Lock Plate
- Heavy Duty Forged Steel Components
- Solid Balls for Reduction of Turbulence and Pressure Drop
- Stainless Steel Stem Standard

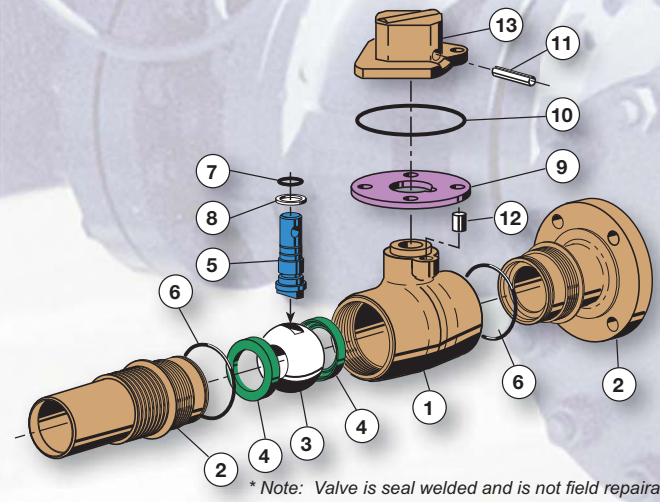

** Note: Valve is seal welded and is not field repairable.*

Material Description

ITEM	PART NAME	MATERIAL (STANDARD)
1	Body	ASTM A105
2	Adapter	ASTM A105
3	Ball	Carbon Steel - Nickel Chrome Plated
4	Seats	Nylon
5	Stem	316 Stainless Steel
6	Body O-Ring	Buna-N
7	Stem O-Ring	Buna-N
8	Stem Seal	TFE
9	Lock Plate	Stainless Steel
10	Weather Seal	Polyethylene
11	Roll Pin	Stainless Steel
12	Stop Pin	Stainless Steel
13	Drive Nut - 2" Square	Ductile Iron

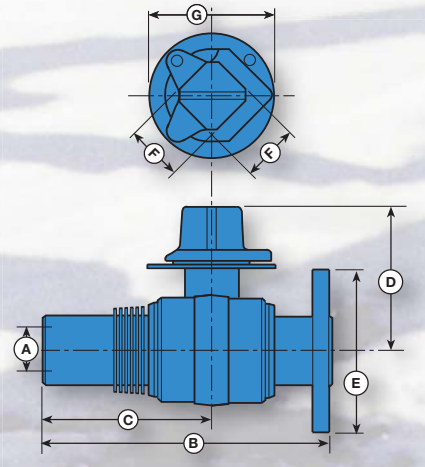

Dimensional Data

SIZE	CATALOG	PORT/A	B	C	D	E	F	G	LBS.	Cv
2x1.5x2	2R-US13-WF	1.5	9.4	5.9	5	6	2	4.5	20	148
2x2x2	2F-US13-WF	2	10	5.9	5.50	6	2	4.5	28	-
3x2.5x3	3R-US13-WF	2.5	9.9	5.9	6.12	7.5	2	4.5	40	550
3x3x3	3F-US13-WF	3	11.3	5.9	6.75	7.5	2	4.5	53	-
4x3x4	4R-US13-WF	3	10.9	6.4	6.75	9	2	4.5	60	662
4x4x4	4F-US13-WF	4	12.1	6.4	7.50	9	2	4.5	81	-

Series US Weld X Flange Carbon Steel

- Weld X Flange Ball Valve
- ANSI Class 300 (740 PSI WP)
- 2" Through 4"



- Multi-Seal Seats
- True Full Port for Hot Tap Service
- Heat Dissipating Fins for Protection of Seats and Seals During Welding
- Rugged Stainless Steel Lock Plate
- Heavy Duty Forged Steel Components
- Solid Balls for Reduction of Turbulence and Pressure Drop
- Stainless Steel Stem Standard

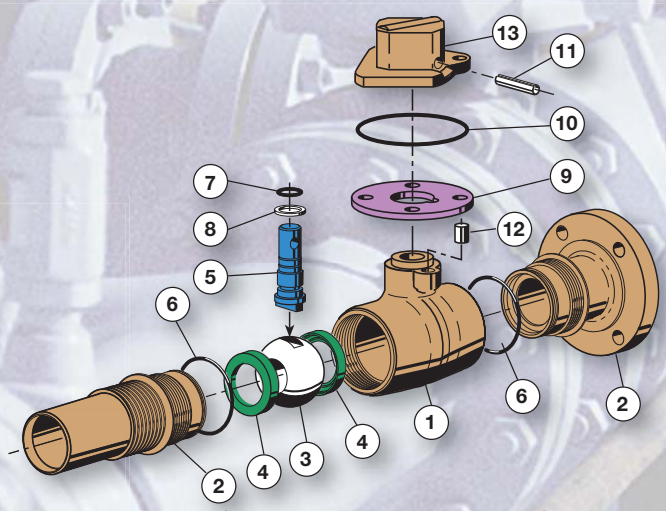

** Note: Valve is seal welded and is not field repairable.*

Material Description

ITEM	PART NAME	MATERIAL (STANDARD)
1	Body	ASTM A105
2	Adapter	ASTM A105
3	Ball	Carbon Steel - Nickel Chrome Plated
4	Seats	Nylon
5	Stem	316 Stainless Steel
6	Body O-Ring	Buna-N
7	Stem O-Ring	Buna-N
8	Stem Seal	TFE
9	Lock Plate	Stainless Steel
10	Weather Seal	Polyethylene
11	Roll Pin	Stainless Steel
12	Stop Pin	Stainless Steel
13	Drive Nut - 2" Square	Ductile Iron

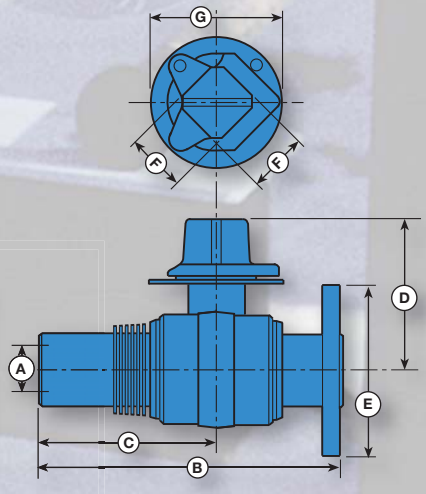

Dimensional Data

SIZE	CATALOG	PORT/A	B	C	D	E	F	G	LBS.	Cv
2x1.5x2	2R-US33-WF	1.5	10.15	5.9	5	6.50	2	4.5	23	148
2x2x2	2F-US33-WF	2	10.2	5.9	5.50	6.50	2	4.5	28	-
3x2.5x3	3R-US33-WF	2.5	11.46	5.9	6.12	8.25	2	4.5	48	550
3x3x3	3F-US33-WF	3	11.5	5.9	6.75	8.25	2	4.5	56	-
4x3x4	4R-US33-WF	3	12.4	6.4	6.75	10	2	4.5	70	662
4x4x4	4F-US33-WF	4	12.4	6.4	7.50	10	2	4.5	91	-

Series US Weld X Weld Carbon Steel



- Weld End Ball Valve
- ANSI Class 150 (285 PSI WP)
- 2" Through 6"

- Multi-Seal Seats
- Heat Dissipating Fins for Protection of Seats and Seals During Welding
- Rugged Stainless Steel Lock Plate
- Heavy Duty Forged Steel Components
- Solid Balls for Reduction of Turbulence and Pressure Drop
- Stainless Steel Stem Standard

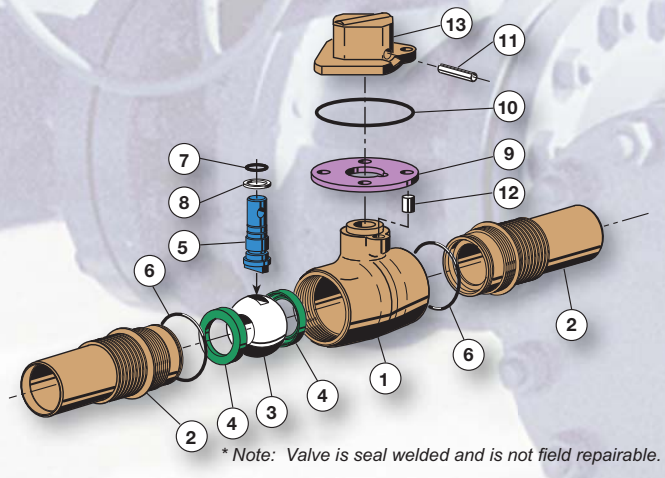

** Note: Valve is seal welded and is not field repairable.*

Material Description

ITEM	PART NAME	MATERIAL (STANDARD)
1	Body	ASTM A105
2	Adapter	ASTM A105
3	Ball	Carbon Steel - Nickel Chrome Plated
4	Seats	Nylon
5	Stem	316 Stainless Steel
6	Body O-Ring	Buna-N
7	Stem O-Ring	Buna-N
8	Stem Seal	TFE
9	Lock Plate	Stainless Steel
10	Weather Seal	Polyethylene
11	Roll Pin	Stainless Steel
12	Stop Pin	Stainless Steel
13	Drive Nut - 2" Square	Ductile Iron

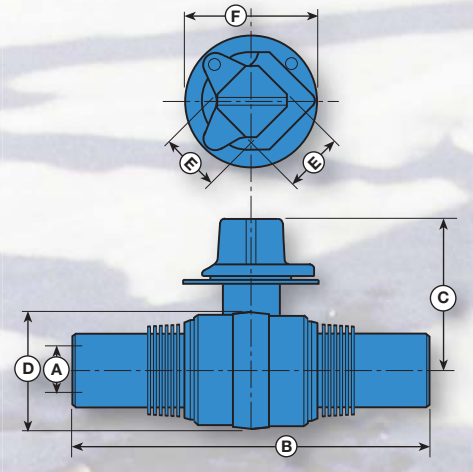

Dimensional Data

SIZE	CATALOG	PORT/A	B	C	D	E	F	LBS.	Cv
2x1.5x2	2R-US13-BW	1.5	11.8	5	3.62	2	4.5	17	148
2x2x2	2F-US13-BW	2	11.8	5.50	4.50	2	4.5	23	-
3x2.5x3	3R-US13-BW	2.5	11.8	6.12	5.25	2	4.5	31	550
3x3x3	3F-US13-BW	3	11.8	6.75	6.25	2	4.5	44	-
4x3x4	4R-US13-BW	3	12.8	6.75	6.25	2	4.5	45	662
4x4x4	4F-US13-BW	4	12.8	7.50	6.87	2	4.5	69	-
6x4x6	6R-US13-BW	4	13.8	7.50	6.87	2	4.5	71	800

BALON

Series US Weld X Weld Carbon Steel

- **Weld End Ball Valve**
- **ANSI Class 300 (740 PSI WP)**
- **2" Through 6"**



- Multi-Seal Seats
- Heat Dissipating Fins for Protection of Seats and Seals During Welding
- Rugged Stainless Steel Lock Plate
- Heavy Duty Forged Steel Components
- Solid Balls for Reduction of Turbulence and Pressure Drop
- Stainless Steel Stem Standard

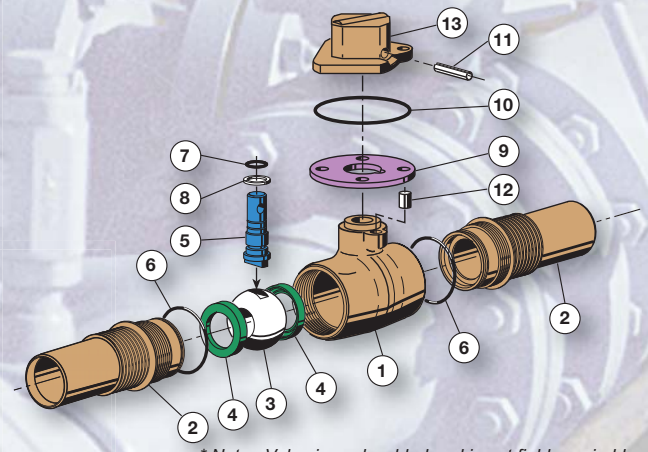

** Note: Valve is seal welded and is not field repairable.*

Material Description

ITEM	PART NAME	MATERIAL (STANDARD)
1	Body	ASTM A105
2	Adapter	ASTM A105
3	Ball	Carbon Steel - Nickel Chrome Plated
4	Seats	Nylon
5	Stem	316 Stainless Steel
6	Body O-Ring	Buna-N
7	Stem O-Ring	Buna-N
8	Stem Seal	TFE
9	Lock Plate	Stainless Steel
10	Weather Seal	Polyethylene
11	Roll Pin	Stainless Steel
12	Stop Pin	Stainless Steel
13	Drive Nut - 2" Square	Ductile Iron

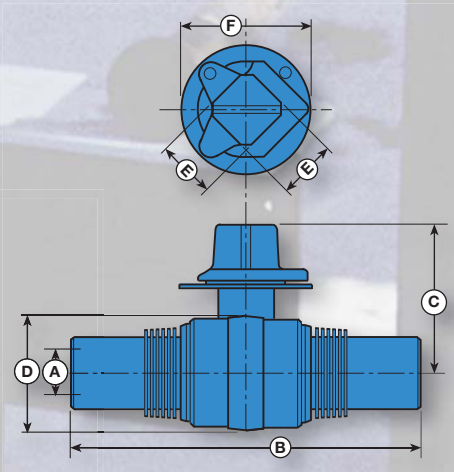

Dimensional Data

SIZE	CATALOG	PORT/A	B	C	D	E	F	LBS.	Cv
2x1.5x2	2R-US33-BW	1.5	11.8	5	3.62	2	4.5	17	148
2x2x2	2F-US33-BW	2	11.8	5.50	4.50	2	4.5	23	-
3x2.5x3	3R-US33-BW	2.5	11.8	6.12	5.25	2	4.5	31	550
3x3x3	3F-US33-BW	3	11.8	6.75	6.25	2	4.5	44	-
4x3x4	4R-US33-BW	3	12.8	6.75	6.25	2	4.5	45	662
4x4x4	4F-US33-BW	4	12.8	7.50	6.87	2	4.5	69	-
6x4x6	6R-US33-BW	4	13.8	7.50	6.87	2	4.5	71	800



- Fire Safe Design
- Maintenance Free Sealing

Series S Ductile Iron

- **Lever Operated Ball Valve**
- **To 2000 PSI WP**
- **1" Through 4"**
- **Threaded Body Construction**

- High Grade Ductile Iron with Better Corrosion Resistance and Greater Yield Strength
- Multi-Seal Seats
- NACE Valves Include 316 Stainless Steel Ball and Stem
- Rugged Locking Device Standard

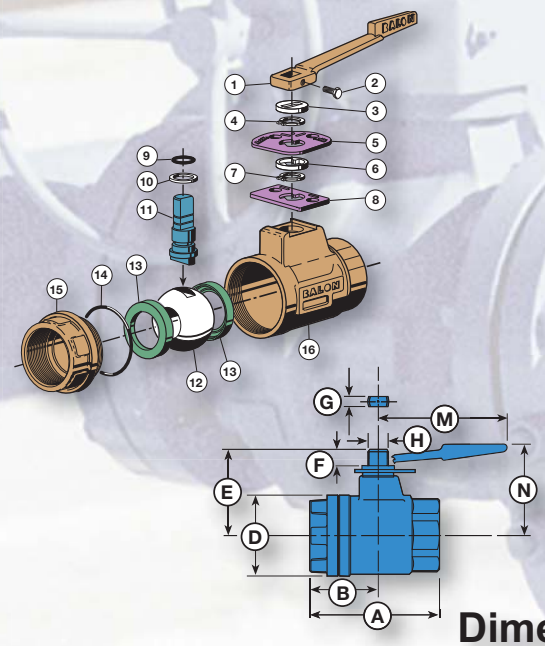

Material Description

ITEM	PART NAME	MATERIAL (STANDARD)	MATERIAL (NACE)
1	Handle*	Ductile Iron	Ductile Iron
2	Handle Bolt	Standard Hex Bolt	Standard Hex Bolt
3	Weather Guard	Polyethylene	Polyethylene
4	Lock Plate Retainer	Carbon Spring Steel	Carbon Spring Steel
5	Lock Plate	Carbon Steel	Carbon Steel
6	Dust Cover	Polyethylene	Polyethylene
7	Stop Plate Retainer	Carbon Spring Steel	Carbon Spring Steel
8	Stop Plate	Carbon Steel	Carbon Steel
9	Stem O-Ring	Buna-N	Fluorocarbon
10	Stem Seal	TFE	TFE
11	Stem	Carbon Steel	316 Stainless Steel
12	Ball	Carbon Steel Nickel Chrome Plated	316 Stainless Steel
13	Ball Seat	Nylon (TFE Optional)	Nylon (TFE Optional)
14	Body O-Ring	Buna-N	Fluorocarbon
15	End Adapter	ASTM A395 Class 60-40-18 Fully Annealed	ASTM A395 Class 60-40-18 Fully Annealed
16	Body	ASTM A395 Class 60-40-18 Fully Annealed	ASTM A395 Class 60-40-18 Fully Annealed

** Balon valves are designed to be operated with a standard open-end wrench. Handle is optional.*

Dimensional Data

SIZE	CATALOG NUMBER STANDARD TRIM CARBON STEEL BALL & STEM	CATALOG NUMBER NACE TRIM 316 SS BALL & STEM	PORT	WP	A	B	D	E	F	G	H	M	N	LBS.	HANDLE	Cv
1x1x1	1F-S42-SE	1F-S42N-SE	1	1000	3.87	1.93	2.25	2.37	.50	.340	.685	4.37	2	3	P-333-CS	-
1x1x1	1F-S62-SE	1F-S62N-SE	1	1500	3.87	1.93	2.25	2.37	.50	.340	.685	4.37	2	3	P-333-CS	-
1x1x1	1F-S92-SE	1F-S92N-SE	1	2000	4	2	2.50	2.37	.50	.340	.685	4.37	2	4	P-333-CS	-
2x1.5x2	2R-S32-SE	2R-S32N-SE	1.5	750	5.25	2.62	3.37	3.62	.62	.434	.873	7.25	5	8	P-4128-DI	125
2x1.5x2	2R-S42-SE	2R-S42N-SE	1.5	1000	5.25	2.62	3.37	3.62	.75	.434	.873	7.25	5	8	P-4128-DI	125
2x1.5x2	2R-S62-SE	2R-S62N-SE	1.5	1500	5.25	2.62	3.37	3.62	.75	.434	.873	7.25	5	8.5	P-4128-DI	125
2x1.5x2	2R-S92-SE	2R-S92N-SE	1.5	2000	5.50	2.75	3.75	3.62	.75	.434	.873	7.25	5	10	P-4128-DI	125
2x2x2	2F-S32-SE	2F-S32N-SE	2	750	5.75	2.87	4.25	4.37	.75	.497	.998	10.25	5.37	12	P-4129-DI	-
2x2x2	2F-S42-SE	2F-S42N-SE	2	1000	5.75	2.87	4.25	4.37	.75	.497	.998	10.25	5.37	13	P-4129-DI	-
2x2x2	2F-S62-SE	2F-S62N-SE	2	1500	6	3	4.75	4.37	.75	.497	.998	10.25	5.37	15	P-4129-DI	-
2x2x2	2F-S92-SE	2F-S92N-SE	2	2000	6	3	4.75	4.37	.75	.497	.998	10.25	5.37	16	P-4129-DI	-
3x2x3	3R-S32-SE	3R-S32N-SE	2	750	7.25	3.50	4.50	4.37	.75	.497	.998	10.25	5.37	17.8	P-4129-DI	180
3x2x3	3R-S62-SE	3R-S62N-SE	2	1500	7.25	3.62	5	4.37	.75	.497	.998	10.25	5.37	22	P-4129-DI	180
3x2.5x3*	3R-S42-SE	3R-S42N-SE	2.5	1000	7.62	3.93	5.25	5.25	1.06	.622	1.248	16	5.75	24	P-4126-DI	400
3x3x3	3F-S32-SE	3F-S32N-SE	3	750	8	4	6	5.75	.87	.747	1.373	20	6.75	33	P-4127-DI	-
3x3x3	3F-S42-SE	3F-S42N-SE	3	1000	8.75	4.37	6	5.75	.87	.747	1.373	20	6.75	33	P-4127-DI	-
4x3x4	4R-S32-SE	4R-S32N-SE	3	750	8.75	4.37	6	5.75	.87	.747	1.373	20	6.75	36	P-4127-DI	525
4x3x4	4R-S42-SE	4R-S42N-SE	3	1000	8.75	4.37	6	5.75	.87	.747	1.373	20	6.75	35	P-4127-DI	525
4x4x4	4F-S22-SE	4F-S22N-SE	4	500	9.37	4.68	7.50	6.37	1.06	.747	1.373	20	7.37	49	P-4127-DI	-

** This reduced port valve has a 2.5" bore for increased flow.*

Series F Ductile Iron

- Lever Operated Ball Valve
- To 2000 PSI WP
- 1" Through 4"
- Bolted Body Construction



- High Grade Ductile Iron with Better Corrosion Resistance and Greater Yield Strength
- Multi-Seal Seats
- Bolted Body Protects Against End Adapter Blowout
- Fire Safe Design
- NACE Valves Include 316 Stainless Steel Ball and Stem
- Rugged Locking Device Standard
- Maintenance Free Sealing

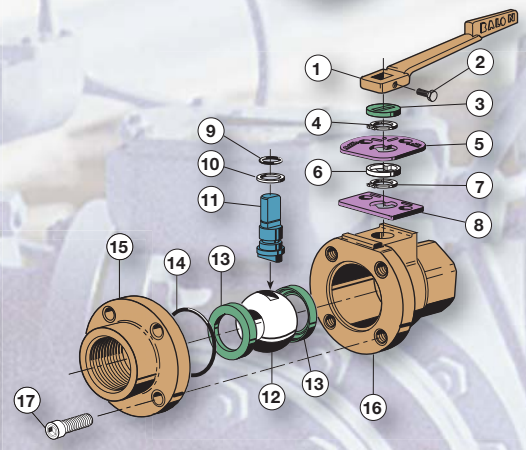

Material Description

ITEM	PART NAME	MATERIAL (STANDARD)	MATERIAL (NACE)
1	Handle*	Ductile Iron	Ductile Iron
2	Handle Bolt	Standard Hex Bolt	Standard Hex Bolt
3	Weather Guard	Polyethylene	Polyethylene
4	Lock Plate Retainer	Carbon Spring Steel	Carbon Spring Steel
5	Lock Plate	Carbon Steel	Carbon Steel
6	Dust Cover	Polyethylene	Polyethylene
7	Stop Plate Retainer	Carbon Spring Steel	Carbon Spring Steel
8	Stop Plate	Carbon Steel	Carbon Steel
9	Stem O-Ring	Buna-N	Fluorocarbon
10	Stem Seal	TFE	TFE
11	Stem	Carbon Steel	316 Stainless Steel
12	Ball	AISI 1018 Nickel Chrome Plated	316 Stainless Steel
13	Ball Seat	Nylon (TFE Optional)	Nylon (TFE Optional)
14	Body O-Ring	Buna-N	Fluorocarbon
15	End Adapter	ASTM A395 Class 60-40-18 Fully Annealed	ASTM A395 Class 60-40-18 Fully Annealed
16	Body	ASTM A395 Class 60-40-18 Fully Annealed	ASTM A395 Class 60-40-18 Fully Annealed
17	Body Bolts	ASTM A-193 B7M	ASTM A193 B7M

** Balon valves are designed to be operated with a standard open-end wrench. Handle is optional.*

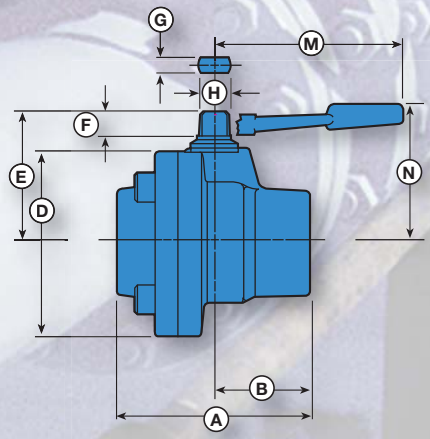

Dimensional Data

SIZE	CATALOG NUMBER		PORT	WP	A	B	D	E	F	G	H	M	N	LBS.	HANDLE	Cv
	STANDARD TRIM CARBON STEEL BALL & STEM	NACE TRIM 316 SS BALL & STEM														
1x1x1	1F-F92-SE	1F-F92N-SE	1	2000	3.87	1.93	3.37	2.37	.50	.340	.685	4.37	2	4	P-333-CS	-
2x1.5x2	2R-F92-SE	2R-F92N-SE	1.5	2000	5.50	2.75	4.87	3.62	.75	.434	.873	7.25	5	12.4	P-4128-DI	125
2x2x2	2F-F62-SE	2F-F62N-SE	2	1500	5.75	2.87	6.12	4.37	.87	.497	.998	10.25	5.37	19	P-4129-DI	-
2x2x2	2F-F92-SE	2F-F92N-SE	2	2000	5.75	2.87	6.12	4.37	.87	.497	.998	10.25	5.37	19	P-4129-DI	-
2.5x2.5x2.5	2.5F-F62-SE	2.5F-F62N-SE	2.5	1500	7	3.50	6.87	5.25	1.06	.622	1.248	16	5.75	27	P-4126-DI	-
3x2x3	3R-F62-SE	3R-F62N-SE	2	1500	7.25	3.62	6.75	4.37	.87	.497	.998	10.25	5.37	26	P-4129-DI	180
3x2x3	3R-F92-SE	3R-F92N-SE	2	2000	7.25	3.62	6.75	4.37	.87	.497	.998	10.25	5.37	26	P-4129-DI	180
3x3x3	3F-F42-SE	3F-F42N-SE	3	1000	8.12	4.06	7.75	5.75	1.06	.747	1.373	20	6.75	40	P-4127-DI	-
4x3x4	4R-F42-SE	4R-F42N-SE	3	1000	8.62	4.31	7.75	5.75	1.06	.747	1.375	20	6.75	42	P-4127-DI	500
4x4x4	4F-F32-SE	4F-F32N-SE	4	750	9.37	4.68	9.25	6.37	1.06	.747	1.375	20	7.37	69	P-4127-DI	-



Series S Ductile Iron

- Lever Operated Ball Valve
- 750 PSI WP
- 2" Through 4"
- Threaded Body Construction

- High Grade Ductile Iron with Better Corrosion Resistance and Greater Yield Strength
- Multi-Seal Seats
- Fire Safe Design
- NACE Valves Include 316 Stainless Steel Ball and Stem
- Rugged Locking Device Standard
- Maintenance Free Sealing

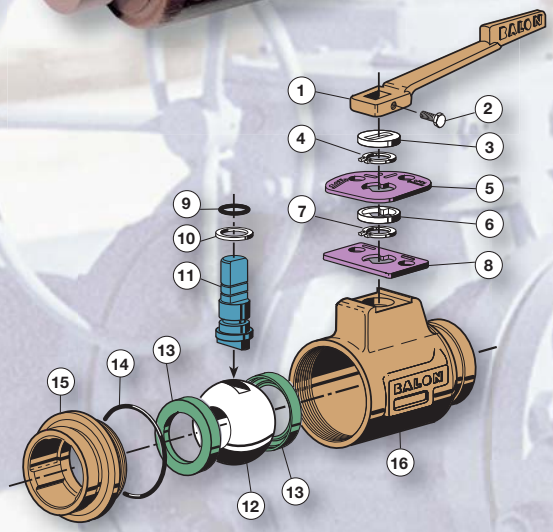

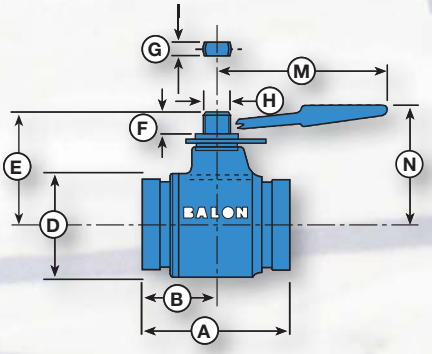

Material Description

ITEM	PART NAME	MATERIAL (STANDARD)	MATERIAL (NACE)
1	Handle*	Ductile Iron	Ductile Iron
2	Handle Bolt	Standard Hex Bolt	Standard Hex Bolt
3	Weather Guard	Polyethylene	Polyethylene
4	Lock Plate Retainer	Carbon Spring Steel	Carbon Spring Steel
5	Lock Plate	Carbon Steel	Carbon Steel
6	Dust Cover	Polyethylene	Polyethylene
7	Stop Plate Retainer	Carbon Spring Steel	Carbon Spring Steel
8	Stop Plate	Carbon Steel	Carbon Steel
9	Stem O-Ring	Buna-N	Fluorocarbon
10	Stem Seal	TFE	TFE
11	Stem	Carbon Steel	316 Stainless Steel
12	Ball	Carbon Steel Nickel Chrome Plated	316 Stainless Steel
13	Ball Seat	Nylon (TFE Optional)	Nylon (TFE Optional)
14	Body O-Ring	Buna-N	Fluorocarbon
15	End Adapter	ASTM A395 Class 60-40-18 Fully Annealed	ASTM A395 Class 60-40-18 Fully Annealed
16	Body	ASTM A395 Class 60-40-18 Fully Annealed	ASTM A395 Class 60-40-18 Fully Annealed

** Balon valves are designed to be operated with a standard open-end wrench. Handle is optional.*

Dimensional Data

SIZE	CATALOG NUMBER		PORT	A	B	D	E	F	G	H	M	N	LBS.	HANDLE	Cv
	STANDARD TRIM CARBON STEEL BALL & STEM	NACE TRIM 316 SS BALL & STEM													
2x1.5x2	2R-S32-GE	2R-S32N-GE	1.5	5.12	2.68	3.37	3.62	.62	.434	.873	7.25	5	7.5	P-4128-DI	140
3x2x3	3R-S32-GE	3R-S32N-GE	2	7.25	3.50	4.50	4.37	.75	.497	.998	10.25	5.37	17	P-4128-DI	200
4x3x4	4R-S32-GE	4R-S32N-GE	3	8.87	4.50	6	5.75	.87	.747	1.373	20	6.75	34	P-4128-DI	550

BALON®

Series F Ductile Iron

- Lever Operated Ball Valve
- ANSI Class 300*
  Raised Face (640 PSI WP)
- 2" Through 4"

** Dimensions meet ANSI standard B16.34; rated working pressure meets ANSI standard B16.42*



- High Grade Ductile Iron with Better Corrosion Resistance and Greater Yield Strength
- Multi-Seal Seats
- Fire Safe Design
- NACE Valves Include 316 Stainless Steel Ball and Stem
- Rugged Locking Device Standard
- Maintenance Free Sealing Improvement Over Lubricated Ball Valves and Cast Iron Plug Valves
- Eliminates High Maintenance of Lubricated Valves

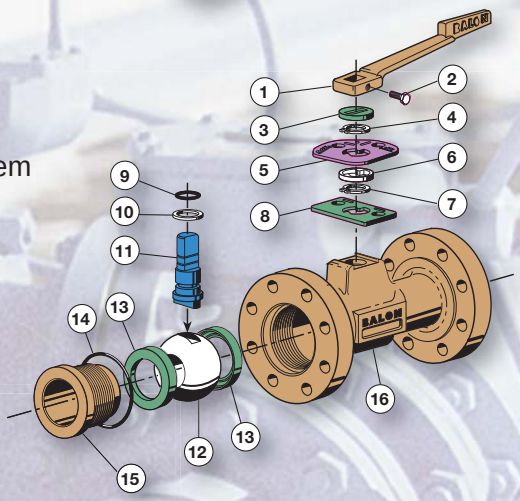

Material Description

ITEM	PART NAME	MATERIAL (STANDARD)	MATERIAL (NACE)
1	Handle*	Ductile Iron	Ductile Iron
2	Handle Bolt	Standard Hex Bolt	Standard Hex Bolt
3	Weather Guard	Polyethylene	Polyethylene
4	Lock Plate Retainer	Carbon Spring Steel	Carbon Spring Steel
5	Lock Plate	Carbon Steel	Carbon Steel
6	Dust Cover	Polyethylene	Polyethylene
7	Stop Plate Retainer	Carbon Spring Steel	Carbon Spring Steel
8	Stop Plate	Carbon Steel	Carbon Steel
9	Stem O-Ring	Buna-N	Fluorocarbon
10	Stem Seal	TFE	TFE
11	Stem	Carbon Steel	316 Stainless Steel
12	Ball	Carbon Steel Nickel Chrome Plated	316 Stainless Steel
13	Ball Seat	Nylon (TFE Optional)	Nylon (TFE Optional)
14	Body O-Ring	Buna-N	Fluorocarbon
15	End Adapter	ASTM A395 Class 60-40-18 Fully Annealed	ASTM A395 Class 60-40-18 Fully Annealed
16	Body	ASTM A395 Class 60-40-18 Fully Annealed	ASTM A395 Class 60-40-18 Fully Annealed

** Balon valves are designed to be operated with a standard open-end wrench. Handle is optional.*

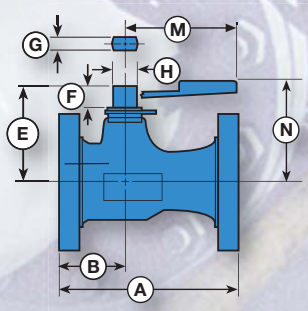

Optimum Flow Direction

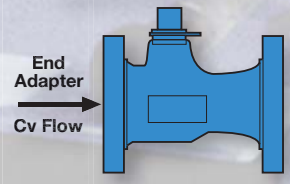

Dimensional Data

SIZE	CATALOG NUMBER		PORT	A	B	E	F	G	H	M	N	LBS.	HANDLE	Cv
	STANDARD TRIM CARBON STEEL BALL & STEM	NACE TRIM 316 SS BALL & STEM												
2x1.5x2	2R-F32	2R-F32N	1.5	8.5	2.75	3.62	.75	.434	.873	7.25	5	21.6	P-4128-DI	125
3x2x3	3R-F32	3R-F32N	2	11.12	3	4.37	.75	.497	.998	10.25	5.37	40	P-4129-DI	200
4x3x4	4R-F32	4R-F32N	3	12	3.37	5.75	.87	.747	1.373	20	6.75	72	P-4127-DI	525



Series F Ductile Iron

- Lever Operated Ball Valve
- ANSI Class 125* • Flat Face (200 PSI WP)
- ANSI Class 150* • Raised Face (250 PSI WP)
- 2" Through 6"

** Dimensions meet ANSI standard B16.34; rated working pressure meets ANSI standard B16.42*

- High Grade Ductile Iron with Better Corrosion Resistance and Greater Yield Strength
- Multi-Seal Seats
- Fire Safe Design
- NACE Valves Include 316 Stainless Steel Ball and Stem
- Rugged Locking Device Standard
- Maintenance Free Sealing Improvement Over Lubricated Ball Valves and Cast Iron Plug Valves
- Eliminates High Maintenance of Lubricated Valves

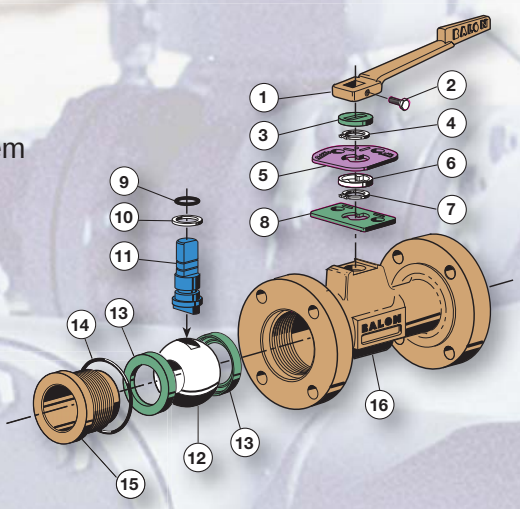

Material Description

ITEM	PART NAME	MATERIAL (STANDARD)	MATERIAL (NACE)
1	Handle*	Ductile Iron	Ductile Iron
2	Handle Bolt	Standard Hex Bolt	Standard Hex Bolt
3	Weather Guard	Polyethylene	Polyethylene
4	Lock Plate Retainer	Carbon Spring Steel	Carbon Spring Steel
5	Lock Plate	Carbon Steel	Carbon Steel
6	Dust Cover	Polyethylene	Polyethylene
7	Stop Plate Retainer	Carbon Spring Steel	Carbon Spring Steel
8	Stop Plate	Carbon Steel	Carbon Steel
9	Stem O-Ring	Buna-N	Fluorocarbon
10	Stem Seal	TFE	TFE
11	Stem	Carbon Steel	316 Stainless Steel
12	Ball	Carbon Steel Nickel Chrome Plated	316 Stainless Steel
13	Ball Seat	Nylon (TFE Optional)	Nylon (TFE Optional)
14	Body O-Ring	Buna-N	Fluorocarbon
15	End Adapter	ASTM A395 Class 60-40-18 Fully Annealed	ASTM A395 Class 60-40-18 Fully Annealed
16	Body	ASTM A395 Class 60-40-18 Fully Annealed	ASTM A395 Class 60-40-18 Fully Annealed

** Balon valves are designed to be operated with a standard open-end wrench. Handle is optional.*

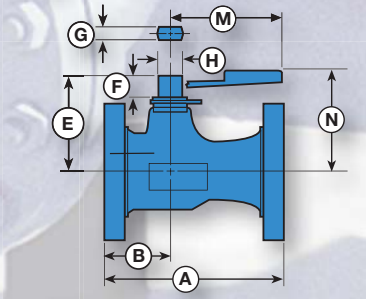

Optimum Flow Direction

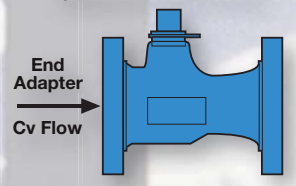

Dimensional Data

SIZE	CATALOG NUMBER STANDARD TRIM CARBON STEEL BALL & STEM	CATALOG NUMBER NACE TRIM 316 SS BALL & STEM	PORT	WP CLASS 125 FLAT FACE	WP CLASS 150 RAISED FACE	A	B	E	F	G	H	M	N	LBS.	HANDLE	Cv
2x1.5x2	2R-F12	2R-F12N	1.5	FF200	RF250	7	2.75	3.62	.75	.434	.873	7.25	5	18	P-4128-DI	125
3x2x3	3R-F12	3R-F12N	2	FF200	RF250	8	3	4.37	.75	.497	.998	10.25	5.37	30	P-4129-DI	200
4x3x4	4R-F12	4R-F12N	3	FF200	RF250	9	3.37	5.75	.87	.747	1.373	20	6.75	53.5	P-4127-DI	525
6x4x6	6R-F12	6R-F12N	4	FF200	RF250	10.50	3.81	6.37	.87	.747	1.373	20	7.37	75	P-4127-DI	800

Series F Ductile Iron



- Lever Operated Ball Valve
- ANSI Class 150* Raised Face (250 PSI WP)
- 2" Through 4"
- Bolted Body Construction

** Dimensions meet ANSI standard B16.34; rated working pressure meets ANSI standard B16.42*

- High Grade Ductile Iron with Better Corrosion Resistance and Greater Yield Strength
- Multi-Seal Seats
- Fire Safe Design
- NACE Valves Include 316 Stainless Steel Ball and Stem
- Rugged Locking Device Standard
- Maintenance Free Sealing Improvement Over Lubricated Ball Valves and Cast Iron Plug Valves
- Eliminates High Maintenance of Lubricated Valves

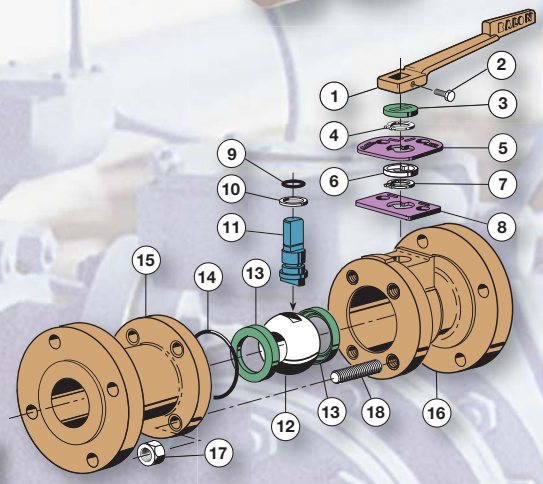

Material Description

ITEM	PART NAME	MATERIAL (STANDARD)	MATERIAL (NACE)
1	Handle*	Ductile Iron	Ductile Iron
2	Handle Bolt	Standard Hex Bolt	Standard Hex Bolt
3	Weather Guard	Polyethylene	Polyethylene
4	Lock Plate Retainer	Carbon Spring Steel	Carbon Spring Steel
5	Lock Plate	Carbon Steel	Carbon Steel
6	Dust Cover	Polyethylene	Polyethylene
7	Stop Plate Retainer	Carbon Spring Steel	Carbon Spring Steel
8	Stop Plate	Carbon Steel	Carbon Steel
9	Stem O-Ring	Buna-N	Fluorocarbon
10	Stem Seal	TFE	TFE
11	Stem	Carbon Steel	316 Stainless Steel
12	Ball	Carbon Steel Nickel Chrome Plated	316 Stainless Steel
13	Ball Seat	Nylon (TFE Optional)	Nylon (TFE Optional)
14	Body O-Ring	Buna-N	Fluorocarbon
15	End Adapter	ASTM A395 Class 60-40-18 Fully Annealed	ASTM A395 Class 60-40-18 Fully Annealed
16	Body	ASTM A395 Class 60-40-18 Fully Annealed	ASTM A395 Class 60-40-18 Fully Annealed
17	Nuts	ASTM A194 2H	ASTM A194 2HM
18	Body Bolts	ASTM A193 B7	ASTM A193 B7M

** Balon valves are designed to be operated with a standard open-end wrench. Handle is optional.*

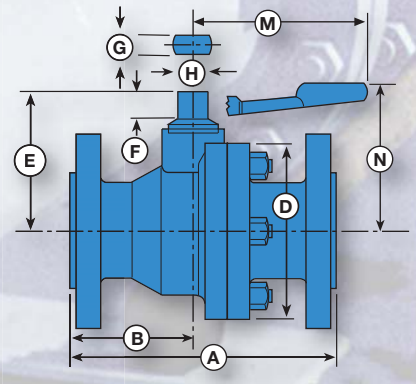

Dimensional Data

SIZE	CATALOG NUMBER		PORT	A	B	D	E	F	G	H	M	N	LBS.	HANDLE	Cv
	STANDARD TRIM CARBON STEEL BALL & STEM	NACE TRIM 316 SS BALL & STEM													
2x2x2	2F-F12	2F-F12N	2	7	2.75	6	4.37	.87	.497	.998	10.25	5.37	28	P-4129-DI	-
3x3x3	3F-F12	3F-F12N	3	8	3.56	7.50	5.75	1.06	.747	1.373	20	6.75	54	P-4127-DI	-
4x4x4	4F-F12	4F-F12N	4	9	4.06	9	6.37	1.06	.747	1.373	20	7.37	80	P-4127-DI	-



Series S Aluminum Bronze

- Lever Operated Ball Valve
- To 1000 PSI WP
- 2" Through 4"
- Threaded Body Construction

- Enhanced Protection Against CO_2 and Saltwater Corrosion
- NACE Standard
- Multi-Seal Seats
- Fire Safe Design
- Minimizes Risk of Galling Associated with Stainless Steel
- 316 Stainless Steel Ball and Stem
- Rugged Locking Device Standard
- Maintenance Free Sealing

Material Description

ITEM	PART NAME	MATERIAL NACE (STANDARD)
1	Handle*	Ductile Iron
2	Handle Bolt	Standard Hex Bolt
3	Weather Guard	Polyethylene
4	Lock Plate Retainer	Stainless Steel
5	Lock Plate	Stainless Steel
6	Dust Cover	Polyethylene
7	Stop Plate Retainer	Stainless Steel
8	Stop Plate	Stainless Steel
9	Stem O-Ring	Fluorocarbon
10	Stem Seal	TFE
11	Stem	316 Stainless Steel
12	Ball	316 Stainless Steel
13	Ball Seat	Nylon (TFE Optional)
14	Body O-Ring	Fluorocarbon
15	End Adapter	ASTM B148-9D (955)
16	Body	ASTM B148-9D (955)

** Balon valves are designed to be operated with a standard open-end wrench. Handle is optional.*

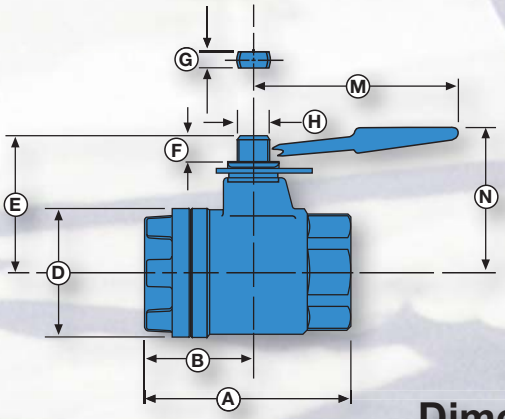

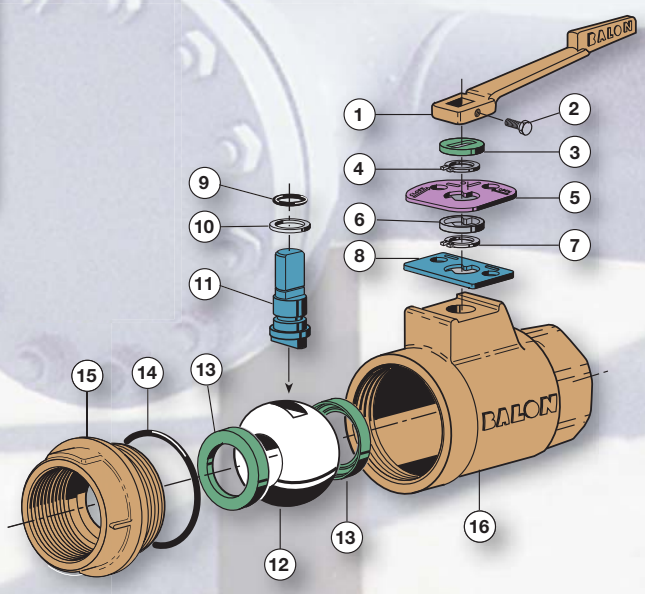

Dimensional Data

SIZE	CATALOG	PORT	WP	A	B	D	E	F	G	H	M	N	LBS.	HANDLE	Cv
2x1.5x2	2R-S44N-SE	1.5	1000	5.25	2.66	3.38	3.66	.75	.434	.873	7.25	5	7.5	P-4128-DI	125
2x2x2	2F-S44N-SE	2	1000	5.75	2.88	4.25	4.38	.75	.497	.998	10.25	5.38	12	P-4129-DI	-
3x2x3	3R-S44N-SE	2	1000	7.25	3.50	4.50	4.38	.75	.497	.998	10.25	5.38	17	P-4129-DI	180
3x3x3	3F-S44N-SE	3	1000	8.75	4.38	6	5.75	.88	.747	1.373	20	6.75	31	P-4127-DI	-
4x3x4	4R-S44N-SE	3	1000	8.75	4.38	6	5.75	.88	.747	1.373	20	6.75	36	P-4127-DI	525
4x4x4	4F-S34N-SE	4	750	9.38	4.69	7	6.38	1.06	.747	1.373	20	7.38	52	P-4127-DI	-

Series F Aluminum Bronze

- Lever Operated Ball Valve
- To 3000 PSI WP
- 1" Through 2"
- Bolted Body Construction



- Enhanced Protection Against CO_2 and Saltwater Corrosion
- NACE Standard
- Minimizes Risk of Galling Associated with Stainless Steel
- Multi-Seal Seats
- Fire Safe Design
- Rugged Locking Device Standard
- Maintenance Free Sealing

Material Description

ITEM	PART NAME	MATERIAL NACE (STANDARD)
1	Handle*	Ductile Iron
2	Handle Bolt	Standard Hex Bolt
3	Weather Guard	Polyethylene
4	Lock Plate Retainer	Stainless Steel
5	Lock Plate	Stainless Steel
6	Dust Cover	Polyethylene
7	Stop Plate Retainer	Stainless Steel
8	Stop Plate	Stainless Steel
9	Stem O-Ring	Fluorocarbon
10	Stem Seal	TFE
11	Stem	316 Stainless Steel
12	Ball	316 Stainless Steel
13	Ball Seat	Nylon (TFE Optional)
14	Body O-Ring	Fluorocarbon
15	End Adapter	ASTM B148-9D (955)
16	Body	ASTM B148-9D (955)
17	Body Stud Bolts	ASTM A193 B7M

** Balon valves are designed to be operated with a standard open-end wrench. Handle is optional.*

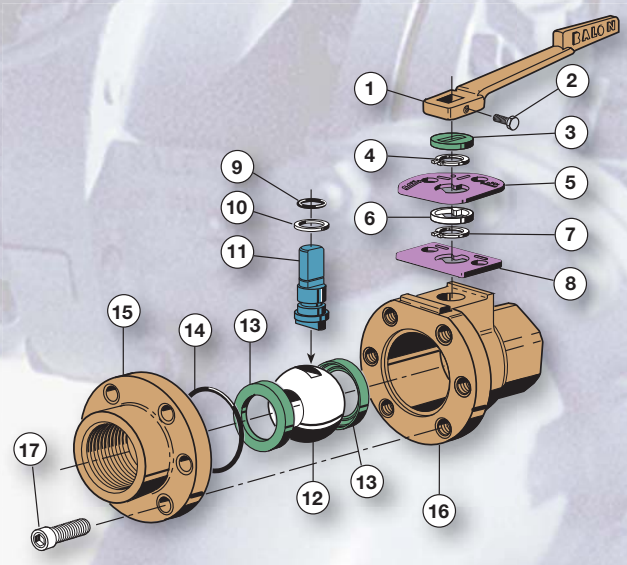

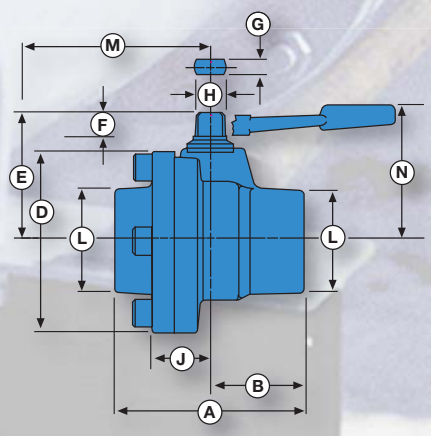

Dimensional Data

SIZE	CATALOG	PORT	WP*	A	B	D	E	F	G	H	J	L	M	N	LBS.	HANDLE	Cv
1x1x1	1F-F04N-SE	1	3000	3.87	1.93	3.37	2.37	.50	.340	.685	1.12	1.87	4.37	2	4	P-333-CS	-
2x1.5x2	2R-F04N-SE	1.5	3000	5.50	2.75	4.87	3.62	.75	.434	.873	1.62	3	7.25	5	11.5	P-4128-DI	125
2x2x2	2F-F94N-SE	2	2000	5.75	2.87	6.12	4.37	.87	.497	.998	2	3.12	10.25	5.37	19	P-4129-DI	-



Series S Aluminum Bronze

- Lever Operated Ball Valve
- 1000 PSI WP
- 2" Through 4"
- Threaded Body Construction

- Enhanced Protection Against CO_2 and Saltwater Corrosion
- Multi-Seal Seats
- Fire Safe Design
- NACE Standard
- Rugged Locking Device Standard
- Maintenance Free Sealing

Material Description

ITEM	PART NAME	MATERIAL NACE (STANDARD)
1	Handle*	Ductile Iron
2	Handle Bolt	Standard Hex Bolt
3	Weather Guard	Polyethylene
4	Lock Plate Retainer	Stainless Steel
5	Lock Plate	Stainless Steel
6	Dust Cover	Polyethylene
7	Stop Plate Retainer	Stainless Steel
8	Stop Plate	Stainless Steel
9	Stem O-Ring	Fluorocarbon
10	Stem Seal	TFE
11	Stem	316 Stainless Steel
12	Ball	316 Stainless Steel
13	Ball Seat	Nylon (TFE Optional)
14	Body O-Ring	Fluorocarbon
15	End Adapter	ASTM B148-9D (955)
16	Body	ASTM B148-9D (955)

** Balon valves are designed to be operated with a standard open-end wrench. Handle is optional.*

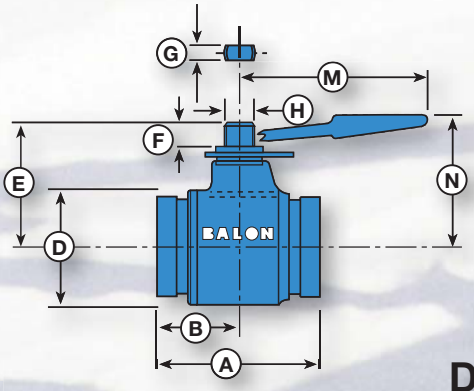

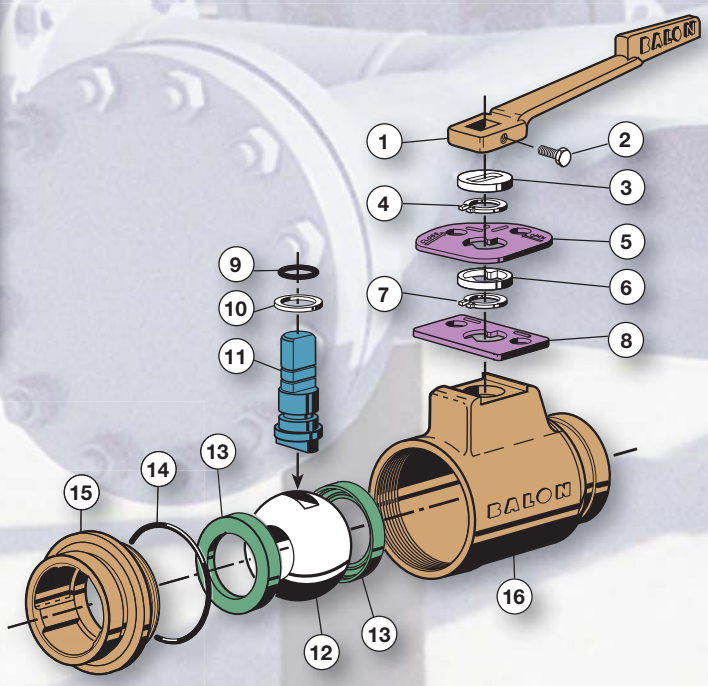

Dimensional Data

SIZE	CATALOG NUMBER NACE TRIM 316 SS BALL & STEM	PORT	A	B	D	E	F	G	H	M	N	LBS.	HANDLE	Cv
2x1.5x2	2R-S44N-GE	1.5	5.12	2.68	3.37	3.62	.62	.434	.873	7.25	5	7.5	P-4128-DI	140
3x2x3	3R-S44N-GE	2	7.25	3.50	4.50	4.37	.75	.497	.998	10.25	5.37	16	P-4129-DI	200
4x3x4	4R-S44N-GE	3	8.87	4.50	6	5.75	.87	.747	1.373	20	6.75	34	P-4127-DI	550

Series F Aluminum Bronze

- Lever Operated Ball Valve
- 2000 PSI WP
- 2"
- Bolted Body Construction



- Enhanced Protection Against CO_2 and Saltwater Corrosion
- Multi-Seal Seats
- Fire Safe Design
- NACE Standard
- Rugged Locking Device Standard
- Maintenance Free Sealing

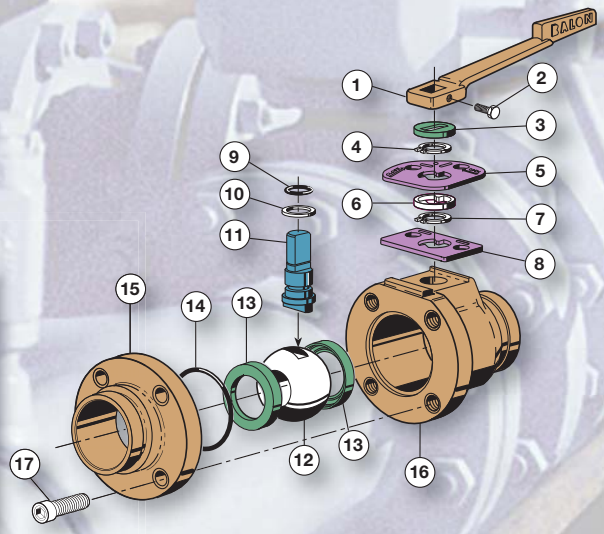

Material Description

ITEM	PART NAME	MATERIAL NACE (STANDARD)
1	Handle*	Ductile Iron
2	Handle Bolt	Standard Hex Bolt
3	Weather Guard	Polyethylene
4	Lock Plate Retainer	Stainless Steel
5	Lock Plate	Stainless Steel
6	Dust Cover	Polyethylene
7	Stop Plate Retainer	Stainless Steel
8	Stop Plate	Stainless Steel
9	Stem O-Ring	Fluorocarbon
10	Stem Seal	TFE
11	Stem	316 Stainless Steel
12	Ball	316 Stainless Steel
13	Ball Seat	Nylon (TFE Optional)
14	Body O-Ring	Fluorocarbon
15	End Adapter	ASTM B148-9D (955)
16	Body	ASTM B148-9D (955)
17	Body Bolts	ASTM A193 B7M

** Balon valves are designed to be operated with a standard open-end wrench. Handle is optional.*

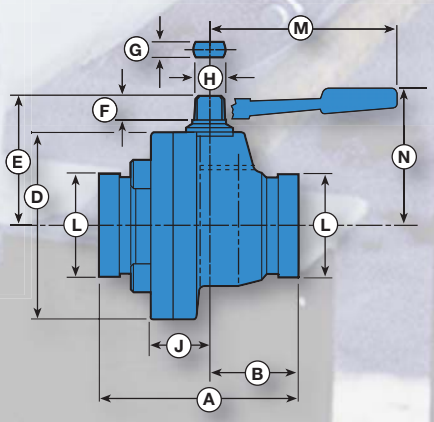

Dimensional Data

SIZE	CATALOG	PORT	A	B	D	E	F	G	H	J	L	M	N	LBS.	HANDLE	Cv
2x1.5x2	2R-F94N-GE	1.5	5.5	2.75	4.87	3.62	.75	.497	.873	1.62	2.37	7.25	5	11.5	P-4128-DI	140

Series LS Threaded End Stainless Steel



- Lever Operated Ball Valve
- To 3000 PSI WP
- ¼" Through 1"
- Threaded Body Construction

- Multi-Seal Seats
- NACE Standard
- Exclusive Patented Design Inhibits Loosening of End Adapter
- All Metal Components Made of Stainless Steel
- Maintenance Free Sealing

Material Description

ITEM	PART NAME	MATERIAL (STANDARD)
1	Weather Guard	Polyethylene
2	Stem Nut	Stainless Steel
3	Spacer	Stainless Steel
4	Lock Plate	Stainless Steel
5	Handle*	Stainless Steel
6	Stem Washer	Acetal
7	Stop Pin	Stainless Steel
8	Stem O-Ring	Fluorocarbon
9	Stem Seal	TFE
10	Stem	316 Stainless Steel
11	Body	316 Stainless Steel
12	Ball Seat	Nylon (TFE Optional)
13	Ball	316 Stainless Steel
14	Body Seal	Fluorocarbon
15	Adapter	316 Stainless Steel

** Handle and locking device standard on all Series LS Ball Valves.*

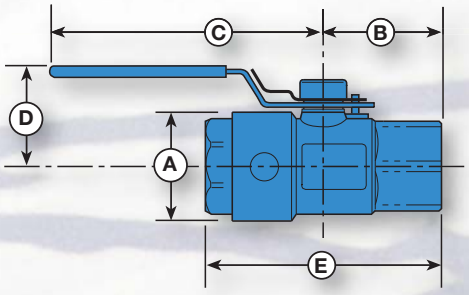

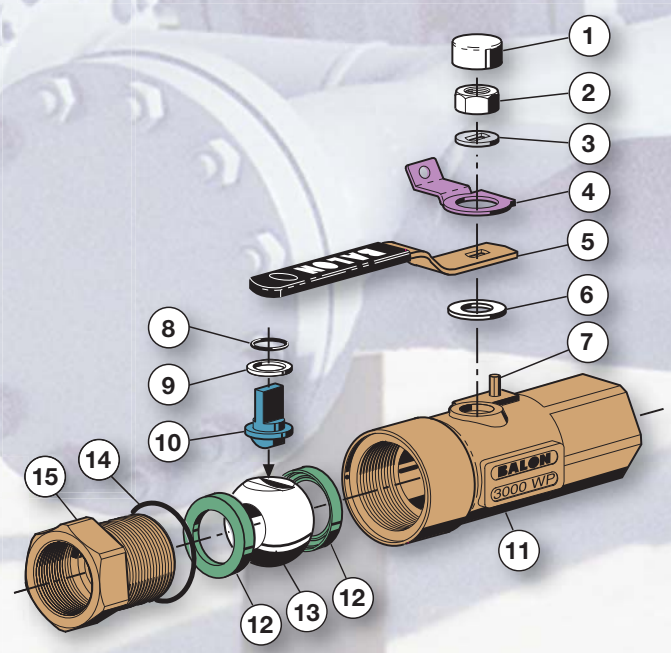

Dimensional Data

SIZE	CATALOG	PORT	WP*	A	B	C	D	E	LBS.	Cv
.25x.37x.25	LS-02592	.37	3000	1.37	1.12	3.50	1.62	2.62	.91	-
.50x.37x.50	LS-05561	.37	2000	1.37	1.12	3.50	1.62	2.50	.75	6
.50x.37x.50	LS-05591	.37	3000	1.37	1.43	3.50	1.62	3	1	6
.75x.75x.75	LS-07592	.75	3000	2.12	1.75	4.87	2.25	3.75	2.5	-
1x.75x1	LS-10561	.75	2000	2.12	1.87	4.87	2.25	3.75	2	30
1x.75x1	LS-10591	.75	3000	2.12	2	4.87	2.25	4.12	2.5	30

Series S Threaded End Stainless Steel

- Lever Operated Ball Valve
- 3000 PSI WP
- 2"
- Threaded Body Construction



- Multi-Seal Seats
- Fire Safe Design
- 316 Stainless Steel Ball and Stem Standard
- Rugged Locking Device Standard
- Maintenance Free Sealing

Material Description

ITEM	PART NAME	MATERIAL NACE (STANDARD)
1	Handle*	Ductile Iron
2	Handle Bolt	Standard Hex Bolt
3	Weather Guard	Polyethylene
4	Lock Plate Retainer	Stainless Steel
5	Lock Plate	Stainless Steel
6	Dust Cover	Polyethylene
7	Stop Plate Retainer	Stainless Steel
8	Stop Plate	Stainless Steel
9	Stem O-Ring	Fluorocarbon
10	Stem Seal	TFE
11	Stem	316 Stainless Steel
12	Ball	316 Stainless Steel
13	Ball Seat	Nylon (TFE Optional)
14	Body O-Ring	Fluorocarbon
15	End Adapter	316 Stainless Steel
16	Body	316 Stainless Steel

** Balon valves are designed to be operated with a standard open-end wrench. Handle is optional.*

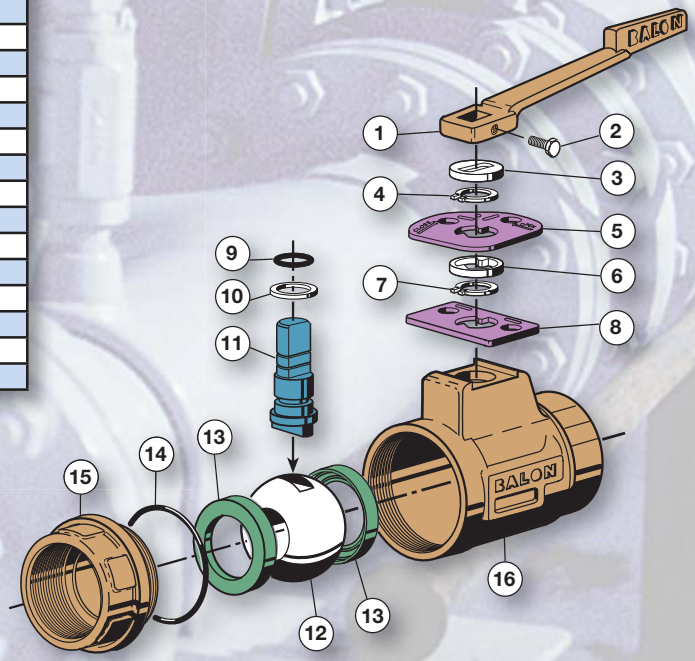

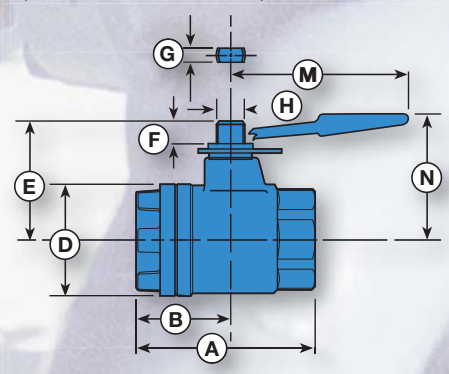

Dimensional Data

SIZE	CATALOG NUMBER NACE TRIM 316 SS BALL & STEM	PORT	A	B	D	E	F	G	H	M	N	LBS.	HANDLE	Cv
2x1.5x2	2R-S05N-SE	1.5	5.5	2.75	4.25	3.62	.75	.434	.873	7.25	5	14	P-4128-DI	125
2x2x2	2F-S05N-SE	2	6	3.12	4.87	4.37	.75	.497	.998	10.25	5.37	20	P-4129-DI	-

Actuator Sizing

Because the actuator sizing is so critical to the proper operation and life of a ball valve, we have chosen not to publish torque values. Misinterpretation of manual torque data can lead to undersizing, while misinterpretation of factored torque values can mislead as to ease of manual operation.

Furthermore, types of service conditions can significantly alter standard torque requirements. Balon valves facilitate ease of use, and we will be glad to provide sizing information upon request through one of our field representatives or from our Oklahoma City headquarters.

Standards and Specifications

Balon utilizes the following standards in the manufacture of ball valves. It should be noted that not all styles, configurations and materials used in Balon valves meet all of these standards in their entirety.

The user therefore, should specify a given standard if there is a need to assure total compliance with a given standard.

API. . . . . (American Petroleum Institute)
API-6FA. . . . . Fire Test For Resilient-Seated Valves
API 5B . . . . . Inspection Of Threads
API-6D. . . . . Pipeline Valves, End Closures, Connectors And Swivels.
API-Q1. . . . . Quality Programs
API-594 . . . . . Wafer Check Valves
ANSI . . . . . (American National Standard Institute)
ANSI-B. . . . . 16.5 - Pipe Flanges And Flanged Fittings
ANSI-B. . . . . 16.10 - Face-To-Face End-To-End Dimensions
ANSI-B. . . . . 16.42 Ductile Iron Pipe Flanges And Flanged Fittings
ANSI-B. . . . . 16.34 - Valves - Flanged End, ... Threaded And Butt Weld
ANSI-B. . . . . (B1.20.1) - Pipe Threads General Purpose (Inch)
MSS. . . . . (Manufacturers Standardization Society)
MSS-SP6. . . . . Standard Finishes For Contact Faces Of Pipe Flanges And Connection End Flanges Of Valves And Fittings
MSS-SP25. . . . . Standard Marking System For Valves, Fittings, Flanges And Fittings
MSS-SP72. . . . . Ball Valves With Flanged Or Butt Welding Ends For General Service
MSS-SP82. . . . . Valve Pressure Test Methods
MSS-SP84. . . . . Steel Valves - Socket Welding And Threaded Ends
NACE MR-01-75. . .Sulfide Stress Cracking, Resistant Metallic Material For Oil Field Equipment (NACE Materials Are Optional And Must Be Specified On Purchase Orders)

Application Guide

This Balon “Media and Application Guide” provides assistance to the engineer in selecting the best material for a particular service. The final selection of materials however, requires the judgement of the user because it may be necessary to sacrifice certain physical properties of a material to take better advantage of others.

Information contained in the following chart is believed to be reliable and is intended to be used by trained personnel at their own discretion and risk. Due to many factors which affect the rate of corrosion, we suggest that final acceptability be established by test under actual operating conditions.

Ratings are based on media at ambient temperatures except as noted.

E - Excellent G - Good F - Fair U - Unsatisfactory BLANK - Insufficient Data

	VALVE MATERIAL			SEAT AND SEAL MATERIAL			
Media *	Carbon Steel	Ductile Iron	316 SS	Buna-N	Viton	Nylon	TFE
Air	E	E	E	E	E	E	E
Alcohols	G	G	E	E	E	F	E
Amines (conc.)	E	E	E	U	U	E	E
Ammonia, Anhydrous	E	G	E	F	U	E	E
- Aqueous	E	E	E	F	U	G	E
- Solutions	G	G	E	F	U	G	E
Benzene or Benzol	G	G	E	U	E	E	E
Brines	F	F	G	E	E	E	E
Bunker Oils (Fuels)	G	G	E	E	E	E	E
Butane	E	E	E	E	E	E	E
Carbolic Acid (Phenol)	U	U	G	U	G	U	E
Carbon Dioxide, Dry	E	F	E	G	G	G	E
Carbonic Acid	U	U	G	G	E	E	E
Carbon Tetrachloride, Dry	F	F	E	U	E	E	E
-Wet	U	U	G	U	E	E	E
Carbonated Water	G	G	E	E	E	G	E
Crude Oil, Sweet	E	E	E	E	E	E	E
- Sour	G	G	E	F	G	G	E
Diethylamine (DEA)	E	E	E	U	U	E	E
Diesel Fuels	E	E	E	E	E	E	E
Dowtherm A and E	G	G	E	U	E	E	E
Drilling Mud	G	G	E	E	E	E	E
Ethane	E	E	E	E	E	E	E
Ethylene	E	E	E	U	E	E	E
Ethylene Glycol	G	G	G	E	E	G	E
Fuel Oil	G	G	E	E	E	E	E
Gas, Manufactured	G	G	G	E	E	E	E
- Natural	G	G	E	E	E	E	E
- Odorizers	G	G	E	U	E	G	E
- Sour	G	G	E	F	E	E	E
Gasoline, Leaded	E	G	E	G	E	E	E
- Unleaded	E	G	E	F	E	E	E
- Aviation	E	G	E	G	E	E	E
- Motor	E	G	E	F	E	E	E
Glycols	G	G	G	E	E	G	E
Heptane	E	E	E	E	E	E	E
Hexane	E	E	E	E	E	E	E
Hydraulic Oil - Petroleum Base	E	E	E	E	E	E	E
- Phosphate Base	E	E	E	U	E	E	E
Hydrocloric Acid -Air Free	U	U	U	F	E	U	E
Hydrofloric Acid	U	U	U	U	U	U	F
Hydrogen Gas	G	G	E	E	E	E	E
Hydrogen Sulfide, Dry(Conc.)	G	G	E	F	F	E	E
Wet(Conc.)	F	U	G	U	F	E	E
Illuminating Gas	E	E	E	E	E		E
Iso-Octane	E	G	E	E	E	E	E

	VALVE MATERIAL			SEAT AND SEAL MATERIAL			
Media *	Carbon Steel	Ductile Iron	316 SS	Buna-N	Viton	Nylon	TFE
Isopropyl Alcohol	G	G	G	G	E	G	E
- Ether	E	G	E	G	U	E	E
JP-4 Fuel	E	E	E	E	E	E	E
JP-5 Fuel	E	E	E	E	E	E	E
JP-6 Fuel	E	E	E	E	E	E	E
Kerosene	G	G	E	E	E	E	E
Liquified Pet. Gas (LPG)	G	G	G	E	E	E	E
Lubricating Oil	E	E	E	E	E	E	E
Mercaptan (Conc.)	G	G	E	F	E	G	E
Methane	E	E	E	E	E	E	E
Muratic Acid	U	U	U	G	E	U	E
Naphtha	G	G	E	G	E	E	E
Naphthalene	E	G	E	U	E	E	E
Natural Gas	E	E	E	E	E	E	E
Nitrogen	E	E	E	E	E	E	E
Oil, Animal	E	E	E	E	E		E
- Cottonseed	F	F	G	E	E	E	E
- Fish	G	G	E	E	E	E	E
- Fuel	G	G	E	E	E	E	E
- Lube	E	E	E	E	E	E	E
- Mineral	G	G	E	E	E	E	E
- Petroleum, Refined	E	G	E	E	E	E	E
Oil-Water Mixtures	E	E	E	E	E	E	E
Parafin	G	G	E	G	E	E	E
Pentane	G	G	E	U	E	E	E
Producer Gas	G	G	G	E	E	E	E
Propane	E	E	E	E	E	E	E
Propyl Alcohol	E	E	E	E	E	E	E
Propylene Glycol	E	E	E	E	E	F	E
Sea Water	U	U	E	E	E	E	E
Sodium Acetate	G	G	G	G	U	G	E
- Hydroxide, Cold, 20%	E	E	E	G	G	E	E
- Hydroxide, Hot, 20%	F	F	G	G	G	G	E
- Hydroxide, Cold, 50%	G	G	G	F	F	F	F
- Hydroxide, Hot, 50%	G	G	G	U	F	U	F
- Hydroxide, Cold, 70%	F	F	G	U	F		F
- Hydroxide, Hot, 70%	G	F	G	U	F		U
Steam (212˚ F)	E	E	E	U	U	U	E
Stoddard Solvent	G	G	G	E	E	G	E
Sulfur Dioxide (Dry)	G	G	E	U	U	F	E
Sulfuric Acid, 0-7%	F	F	G	F	E	G	E
- 20%	U	U	F	U	E	U	E
- 50%	U	U	U	U	E	U	E
- 100%	U	U	U	U	E	U	E
Toluene or Toluol	E	E	E	U	E	E	E
Water, Distilled, Aerated	U	U	E	E	G	E	E
- Fresh	F	F	E	E	E	E	E
- Sea	U	U	E	E	E	E	E
Wax Emulsions	E	G	E	E	E	E	E
Waxes	E	E	E	E	E	E	E
Xylene, Dry	E	E	E	U	E	E	E

** Consult Oklahoma City office for compatibility of Aluminum Bronze Material*

Seat Pressure & Temperature Ratings

NYLON / ACETAL / PEEK

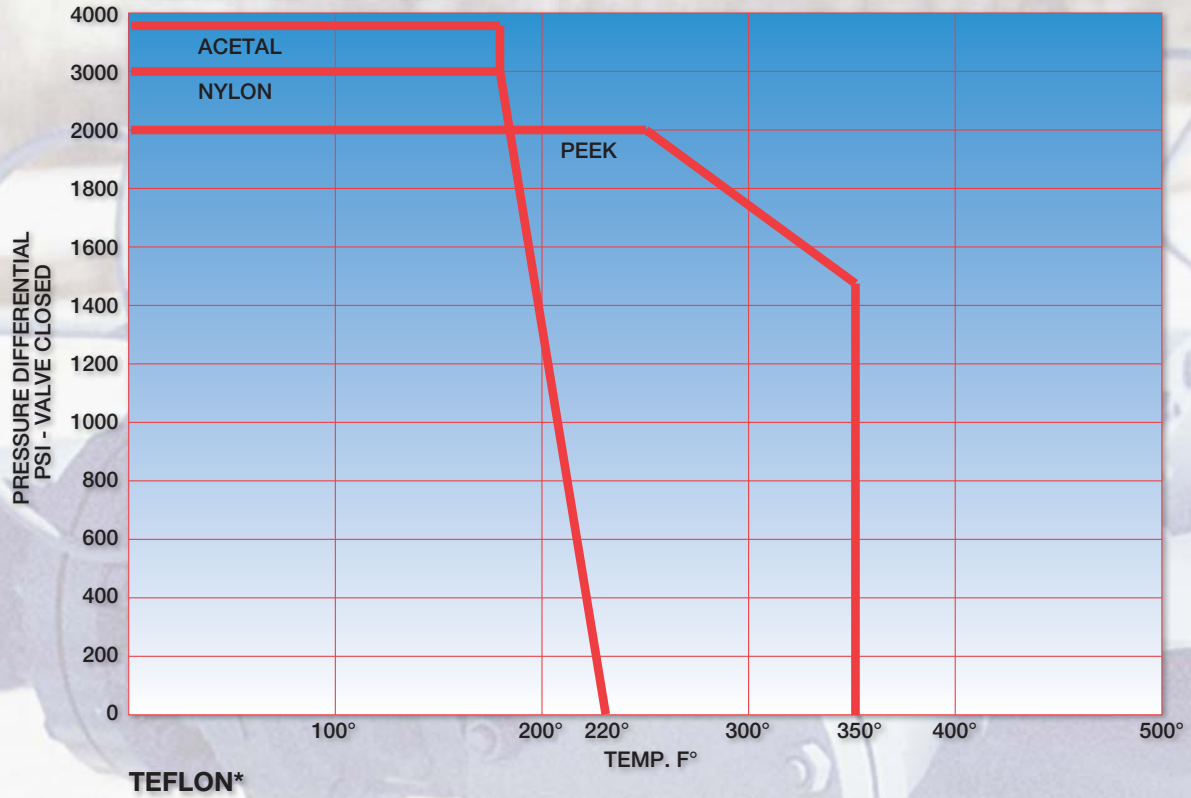

TEFLON*

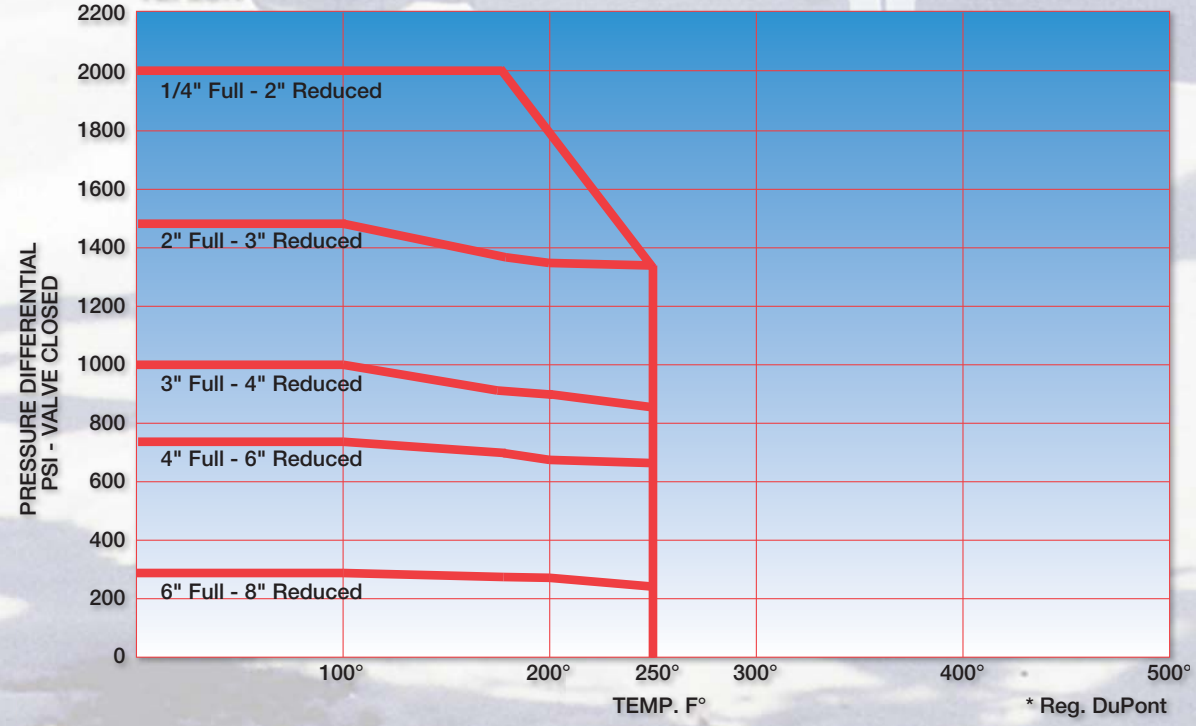

* Reg. DuPont

Flow Coefficient Data

Cv Ratings of Full Bore Valve

Depending upon pipe schedule with which they are used, Balon full bore valves have bore sizes exceeding or nearly equaling the pipe inside diameter. The best method of computing system pressure losses is to consider the valve an equivalent length of pipe.

Using the Cv method of rating full bore valves does not provide good accuracy. The reason for this is that Cv tests do not provide valid data until the measured pressure drop equals at least 2 psi. In the relatively short length involved in a valve, extremely high velocities are required to generate that pressure drop.

At these high velocities (which are well beyond those used in industry), other effects such as vibration and pulsation are then created by “super turbulent” flow. The net results are Cv ratings which are lower than would be derived if pressure losses could be consistently measured at velocities in the usable range.

Cv data for reduced port valves are listed on the product pages.



We Make Them

We Don't Import Valves









W-K-M® DynaSeal® 210F Ball Valve

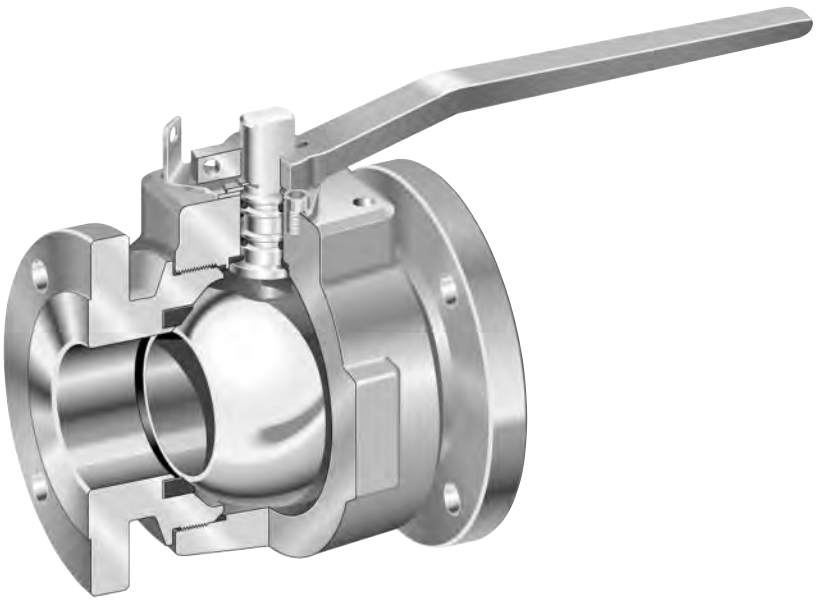

Table of Contents

Scope 1
Nameplate Information 2
Storage 2
Installation 2
Operation 3
Routine Maintenance 3
Troubleshooting 4

Item	Description
1	Tailpiece
2	Tailpiece Gasket
3	Seat Ring
4	Ball
5	Body
6	Grease Fitting
7	Lever
8	Retainer Ring
9	Stop Plate
10	Cap Screws
11	Locking Plate
12	Stem O-Rings
13	Stem Seal
14	Stem

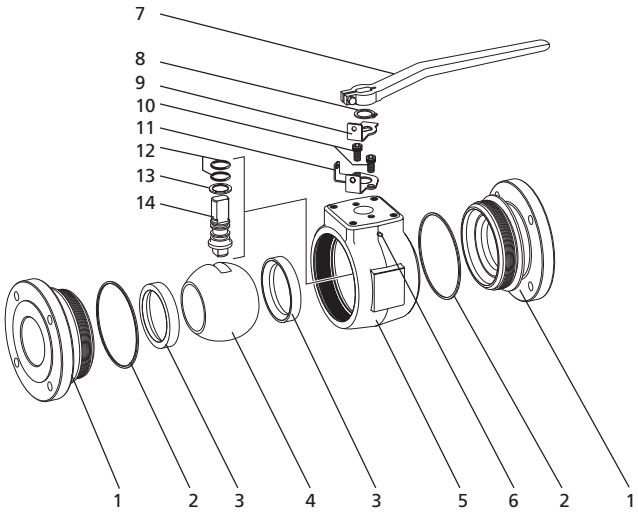

210F Ball Valve

Scope

The W-K-M DynaSeal 210F is a premium quality floating ball valve proven in a number of applications. It has deep-pocketed seats, double "O" ring stem seals and is available in carbon steel and stainless trims. They may be specified in sizes from 1" to 4" in class 150, 300, and 600 flanged ends. Threaded 2" full and regular bores are also available.

Nameplate Information

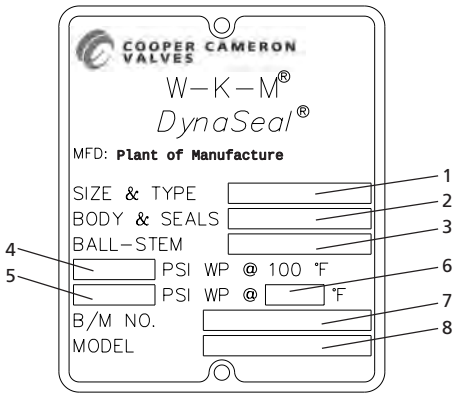

Size 2”F and Larger

Item	Description
1	Nominal valve size and type designation
2	Body material symbol and seat-seal code designation
3	Ball-Stem material designation
4	Maximum cold working pressure
5	Maximum working pressure
6	Maximum temperature
7	Assembly part number
8	Model number

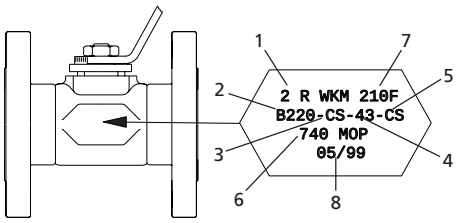

Size 2”R and Smaller

Item	Description
1	Nominal valve size
2	Valve type designation
3	Body material designation
4	Seat-Seal code designation
5	Ball-Stem material designation
6	Maximum cold working pressure
7	Model number
8	Date of manufacture

Storage

After valves are assembled and tested, they are placed in the full open position, flange seal surfaces and bores are greased and end protectors are installed. This will provide adequate protection for indoor storage. Extended outdoor storage requires periodic inspection and the addition of a corrosion inhibitor. Contact your CCV representative for extended storage guidelines. Valves should only be stored in the full open or full close position to prevent seat distortion.

Installation

DynaSeal 210F valves may be installed in any position with flow from either direction.

However, for best service life there is a *preferred* vertical or horizontal position to maximize sealing and minimize the accumulation of sediment. In the vertical position it is preferred to have the upstream pressure from above so the weight of the ball will assist the pressure in sealing. With the run of the valve in a horizontal position, it is preferred to have the stem lying horizontal (i.e. toward the viewer) with pressure from the right. During operation, flow will act as a siphon and minimize retention of sediment.

When handling or installing a valve, keep the valve in the full open position whenever possible to prevent foreign object damage to the ball.

Flanged-End valves may be bolted into the line using two open or boxed end wrenches.

1. Threads of flange bolts and nuts should be lubricated to obtain maximum loading of bolts.
2. Finger tighten all nuts first.
3. When tightening bolts, use the crisscross method and torque each bolt to ANSI or gasket manufacturers specifications.

Threaded-End valves are installed using two pipe wrenches, one on the flats of the tailpiece adjacent to the pipe being installed and the other on the pipe. DO NOT apply wrench to the body section or opposite side tailpiece as this may result in the tailpiece turning and transmitting torque to the valve body.

Field testing, if performed after the the valve has been properly installed into the line, should be done in accordance with the following procedure:

Caution: Ensure that all test fluids contain corrosion inhibitors and are compatible with valve seat and seal material.

1. Preliminary Testing – Completely flush the system or the line to minimize damage to the seats and ball surface which might be caused by weld slag or other foreign matter resulting from installation procedures.
2. Line Testing – When performing this test, the valve should be in the half-open position to ensure that the body cavity is completely filled with the test media and to prevent accidental over pressure of the seats. NOTE: Line may be tested at a maximum of 1 1/2 times the valve's cold working pressure rating without consulting the factory.
3. Seat Testing – When testing the seats with the valve in the closed position, do not exceed the valve's cold working pressure rating.
4. Upon completion of testing, purge all test fluids from the valve.

Operation

DynaSeal 210F ball valves operate from fully open to fully close by a 90 degree turn of the handle. The handle aligned with the pipe always means the valve is open and with the handle perpendicular to the pipe means the valve is closed. Additionally, the stems have flats that align the handle and can be used to indicate ball position. The bore of the ball is parallel with the faces of the stem flats.

DynaSeal 210F valves may be power actuated. Pneumatic and hydraulic actuators, whether of the fail-open, fail-close, or fail-last position type, have "OPEN-CLOSE" indicators on the top of each unit. On a pneumatic actuator, make sure filters and lubricators (if recommended by the actuator manufacturer) are installed prior to valve and actuator installation. Should any maintenance be necessary, obtain the part number from the unit's nameplate and contact Cooper Cameron Valves or the nearest representative.

Routine Maintenance

Due to its design and simplicity the 210F ball valve requires very little maintenance. Its non-lubricated, self-cleaning ball can provide reliable, leak free performance over a long period of time.

Warning: Valves should be placed in a partially open position prior to working on a valve or removing it from service to vent pressure or drain product that may be trapped in the body cavity. When removing threaded end valves from the line, apply wrenches in the same manner used for installation and NOT to the valve body section or opposite tailpiece as this may result in breaking loose the threaded tailpiece to body joint.

Troubleshooting Chart

Trouble	Probable Cause	Remedy
Will not open or close	a. Iced up due to restricted flow or low temperatures. b. Pressure locked. (Condition in which the body pressure exceeds the line pressure by an excessive amount)	a. Flush out with warm material. b. Reduce valve temperature or pressurize line to rated working pressure to reduce pressure differential sufficient to operate valve.
Hard to operate	a. Accumulation or solidification of material in the body of valve. b. Swelling seats. c. Corrosion between stem and valve body d. Operator not installed properly.	a. Flush valve to get material out of body. b. Install correct trim.* (Requires valve removal and disassembly) c. Apply penetrating oil around stem. If still won't operate, disassemble valve and polish stem.* d. Check operator.
Will not seal properly	a. Worn or damaged seats and/or ball. b. Foreign matter between seat and ball. c. Operator stops not set properly.	a. Replace worn parts* (Requires valve removal and disassembly) b. Operate several times to wipe clean. c. Adjust stops to proper setting.
Valve leaking between body and tailpiece	a. Leaking tailpiece gasket. b. Tailpiece and body are not tightened together properly.	a. Replace gasket.* (Requires valve removal and disassembly) b. Tighten parts to specified torque. *
Leaking around stem	a. Worn or damaged "O" ring seals.	a. Replace stem seals.* (Requires valve removal and disassembly)

*Contact your CCV representative for a repair manual.

Headquarters

Cooper Cameron Valves
16500 South Main Street
Missouri City, TX
77489-1300

Phone: 281-499-8511
800-323-9160
Fax: 281-499-6965

USA

Cooper Cameron Valves
845 S.W. 29th Street
Oklahoma City, OK
73147

Phone: 405-631-1321
Fax: 405-629-0420

Scotland

Cooper Cameron Valves
Houstoun Industrial Estate
Houstoun Road
West Lothhian EH54 - 5BZ
Livingston, Scotland

Phone: 44-1506-444-000
Fax: 44-1224-783-355

http://www.ccvalve.com

W-K-M® and DynaSeal® are trademarks of Cooper Cameron Corporation

© Cooper Cameron Corporation, Cooper Cameron Valves Division, Printed in USA / 9-99 / TC1417

W-K-M® DynaSeal® 310C 2-piece Ball Valve

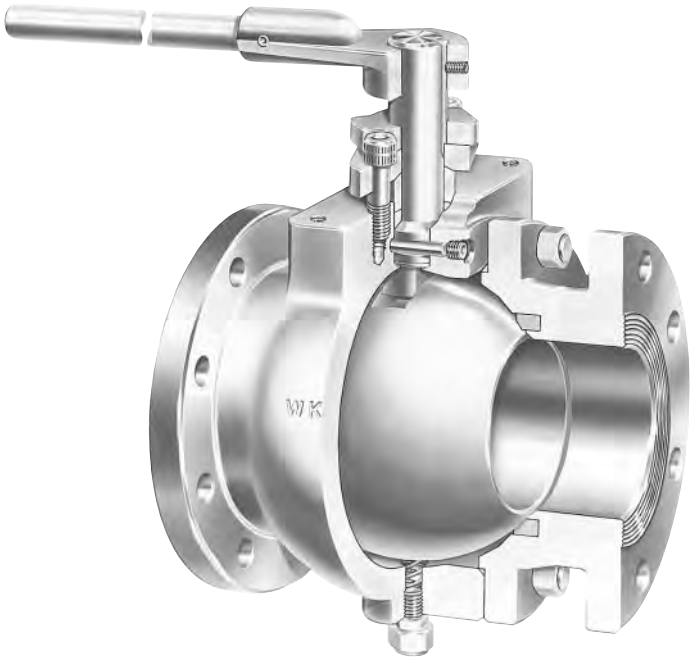

Table of Contents

Scope 1
Nameplate Information 2
Storage 2
Installation 2
Operation 3
Routine Maintenance 3
Troubleshooting 4

Item	Description
1	Tailpiece
2	Tailpiece Gasket
3	Seat Ring
4	Ball
5	Bleed Fitting
6	Ground Spring
7	Body
8	Packing
9	Compression Ring
10	Bonnet Cap
11	Cap Screws
12	Stop Plate
13	Lever - 4" and 6" only
14	Key
15	Worm Gear Actuator
16	Mounting Plate - 10" Bore and larger
17	Mounting Bracket - 4" and 6" Bore Valves
18	Mounting Bracket - 8" Bore and larger
19	Stem
20	Stem Gasket
21	Stem Retainer Pin
22	Pipe Plug

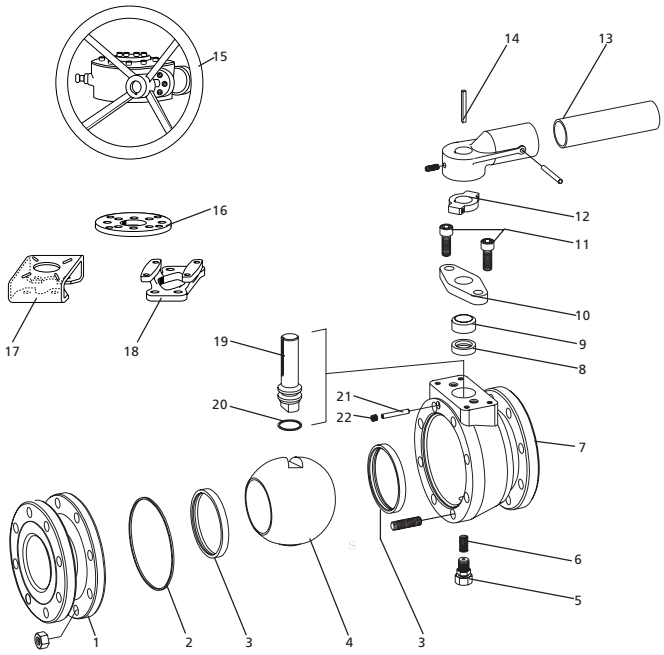

310C 2-piece Ball Valve

Scope

The W-K-M DynaSeal 310C 2-piece bolted body ball valve is designed to satisfy a wide range of applications. It has deep-pocketed seats, an adjustable replaceable stem packing and is available in carbon and stainless steel. The 310C 2-piece design is offered in sizes 4" to 12" full bore and 6" to 14" regular port class 150 and 300 flanged and class 300 butt weld end connections.

Nameplate Information

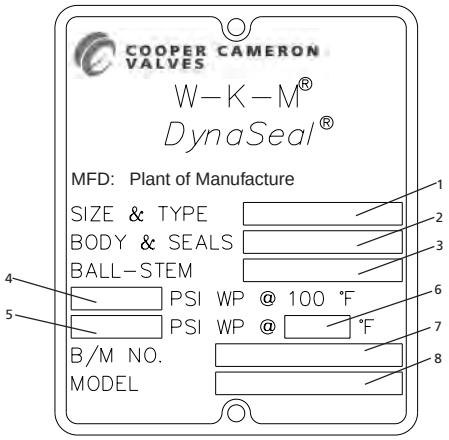

Item	Description
1	Nominal valve size and type designation
2	Body material symbol and seat-seal code designation
3	Ball-Stem material designation
4	Maximum cold working pressure
5	Maximum working pressure
6	Maximum temperature
7	Assembly part number
8	Model number

Storage

After valves are assembled and tested, they are placed in the full open position, flange seal surfaces and bores are greased and end protectors are installed. This will provide adequate protection for indoor storage. Extended outdoor storage requires periodic inspection and the addition of a corrosion inhibitor. Contact your CCV representative for extended storage guidelines. Valves should only be stored in the full open or full close position to prevent seat distortion.

Installation

DynaSeal 310C 2-piece ball valves may be installed in any position with flow from either direction. However, for best service life there is a *preferred* vertical or horizontal position to maximize sealing and minimize the accumulation of sediment. In the vertical position it is preferred to have the upstream pressure from above so the weight of the ball will assist the pressure in sealing. With the run of the valve in a horizontal position, it is preferred to have the stem lying horizontal (i.e. toward the viewer) with pressure from the right. During operation, flow will act as a siphon and minimize retention of sediment.

When handling or installing a valve, keep the valve in the full open position whenever possible to prevent foreign object damage to the ball.

Butt Welded-End – To prevent ball and seat damage due to excessive heat or weld slag, the following procedure is recommended for welding DynaSeal 310C valves into a line:

1. Use solvent to clean grease or rust inhibitor from the ball and/or bore of the valve.
2. Electric welding equipment is preferred for all installations. However, if only oxygen-acetylene welding equipment is available, extreme caution should be taken regarding excess welding temperature.
3. Weld with ball in the "Full Open" position.
4. Make sure temperature of body/seat area does not exceed 250 F (Check with a Tempil stick).
5. Avoid rapid application of excess welding material. Weld each end of valve with a continuous bead using a 1/8 in. maximum diameter electric welding rod.

Thoroughly clean (by pigging and/or flushing) weld slag from valve bore and line before turning ball to closed position.

Flanged-End valves may be bolted into the line using two open or boxed end wrenches.

1. Threads of flange bolts and nuts should be lubricated to obtain maximum loading of bolts.
2. Finger tighten all nuts first.
3. When tightening bolts, use the crisscross method and torque each bolt to ANSI or gasket manufacturers specifications.

Field testing, if performed after the valve has been properly installed into the line, should be done in accordance with the following procedure:

Caution: Ensure that all test fluids contain corrosion inhibitors and are compatible with valve seat and seal material.

1. Preliminary Testing – Completely flush the system or the line to minimize damage to the seats and ball surface which might be caused by weld slag or other foreign matter resulting from installation procedures.
2. Line Testing – When performing this test, the valve should be in the half-open position to ensure that the body cavity is completely filled with the test media and to prevent accidental over pressure of the seats. NOTE: Line may be tested at a maximum of 1 1/2 times the valve's cold working pressure rating without consulting the factory.
3. Seat Testing – When testing the seats with the valve in the closed position, do not exceed the valve's cold working pressure rating.
4. Upon completion of testing, purge all test fluids from the valve.

Operation

DynaSeal 310C ball valves operate from fully open to fully close by a 90 degree turn of the handle. The handle aligned with the pipe always means the valve is open and with the handle perpendicular to the pipe means the valve is closed. Additionally, the stems have keys that align the handle and can be used to indicate ball position. The bore of the ball is in line with key.

Worm gear operators, available as standard equipment on sizes 8"-12"F and 10"-14"R valves, have an arrow on the top of the operator unit that indicates the "OPEN – CLOSE" position of the ball.

Open and close arrows are also stamped on the worm gear housing indicating which direction to rotate handwheel; i.e. counter-clockwise to open, clockwise to close. NOTE - that wheel movement in these directions is an accepted industry standard for opening and closing any valve with a worm gear operator.

DynaSeal 310C valves may be power actuated. Pneumatic and hydraulic actuators, whether of the fail-open, fail-close, or fail-last position type, have "OPEN – CLOSE" indicators on the top of each unit. On a pneumatic actuator, make sure filters and lubricators (if recommended by the actuator manufacturer) are installed prior to valve and actuator installation. Should any maintenance be necessary, obtain the part number from the unit's nameplate and contact Cooper Cameron Valves or the nearest representative.

Routine Maintenance

Due to its design and simplicity the 310C ball valve requires very little maintenance. Its non-lubricated, self-cleaning ball can provide reliable, leak free performance over a long period of time.

The only preventative maintenance recommended is to periodically inspect the valve for leaks around the stem or actuator. Should a leak be noticed, the following procedure is for adjusting the packing.

Stem Packing Adjustment –

1. With an Allen wrench, snug up each of the two packing adjustment screws in a clockwise direction.
2. Snug up each screw an equal amount only as much as required to stop the leak, not to exceed the maximum specified in the following table.
3. The following table gives torque values that will seal stem packing in good condition. Torque values above this indicate seals are worn and need replacement and excessive tightening will also cause an unacceptable increase in valve stem torque.

Torque Values for Packing Adjustment Screws

Valve Size	Screw Size	Torque	
		in-lb	(kg-m)
4F, 6R, 6F, 8F	5/8-11 NC	15-20	(2.1-2.8)
8F, 10R, 10F, 12R,12F,14R	10-24 NC	25-30	(3.5-4.2)

If the valve is equipped with a worm gear operator, a once-a-year check of the lubricant should assure years of trouble-free performance. If the unit has a grease fitting on its cover, fill it with grease. If there is no grease fitting, remove the unit's top cover and fully grease the gear.
NOTE - if at any time the wheel is unusually hard to operate, investigate the problem immediately to determine whether the fault lies with the valve or the worm gear operator. Should any maintenance be necessary on the worm gear, first obtain the part number from the tag located on the unit's gearbox and then contact Cooper Cameron Valves or your nearest representative.

Warning: Valves should be placed in a partially open position prior to working on a valve or removing it from service to vent pressure or drain product that may be trapped in the body cavity.

Troubleshooting Chart

Trouble	Probable Cause	Remedy
Will not open or close	a. Iced up due to restricted flow or low temperatures. b. Pressure locked. (Condition in which the body pressure exceeds the line pressure by an excessive amount)	a. Flush out with warm material. b. Reduce valve temperature or pressurize line to rated working pressure to reduce pressure differential sufficient to operate valve.
Hard to operate	a. Accumulation or solidification of material in the body of valve. b. Swelling seats. c. Corrosion between stem and valve body. d. Operator not installed properly. e. Body bolts adjusted unequally.	a. Flush valve to get material out of body. b. Install correct trim.* c. Apply penetrating oil around stem. If still won't operate, disassemble valve and polish stem.* d. Check operator. e. Loosen bolts after removing from service and adjust equally to specified torque.
Will not seal properly	a. Worn or damaged seats and/or ball. b. Foreign matter between seat and ball. c. Operator stops not set properly.	a. Replace worn parts* (Requires valve removal and disassembly) b. Operate several times to wipe clean. c. Adjust stops to proper setting.
Valve leaking between body and tailpiece.	a. Leaking tailpiece gasket. b. Tailpiece and valve body are not tightened together properly.	a. Replace gasket. * b. Tighten parts to specified torque. *
Leaking around stem	a. Loose stem packing b. Worn or damaged stem packing.	a. Adjust stem packing screws. b. Replace stem packing.*

* Contact your CCV representative for a Repair Manual.

Headquarters
Cooper Cameron Valves
16500 South Main Street
Missouri City, TX 77489-1300
Phone: 281-499-8511 800-323-9160,
Fax: 281-499-6965

http://www.ccvalve.com

USA
Cooper Cameron Valves
845 S.W. 29th Street
Oklahoma City, OK 73147
Phone: 405-631-1321
Fax: 405-629-0420

Scotland
Cooper Cameron Valves
Houstoun Industrial Estate
Houstoun Road
West Lothian EH54 - 5BZ
Livingston, Scotland
Phone: 44-1506-444-000
Fax: 44-1224-783-355

W-K-M® and DynaSeal® are trademarks of Cooper Cameron Corporation

© Cooper Cameron Corporation, Cooper Cameron Valves Division, Printed in USA / 7-99 / TC1415

Installation, Operation and Maintenance Manual

W-K-M® DynaSeal® 310C5 2-Piece Threaded Body Ball Valve

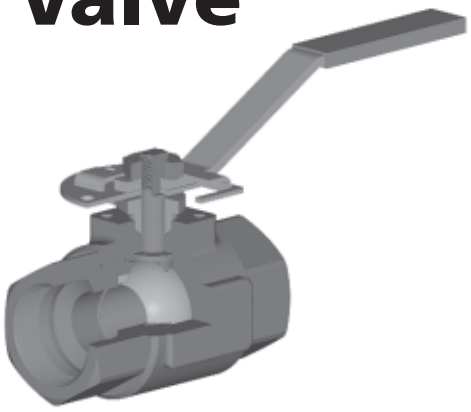

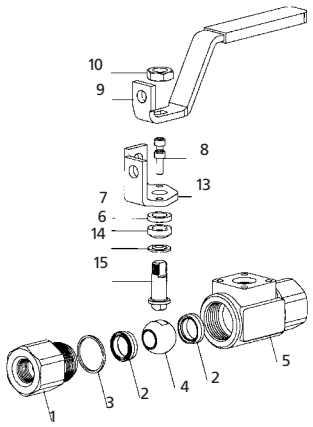

1/4" - 1" 310C5 2-piece Ball Valve

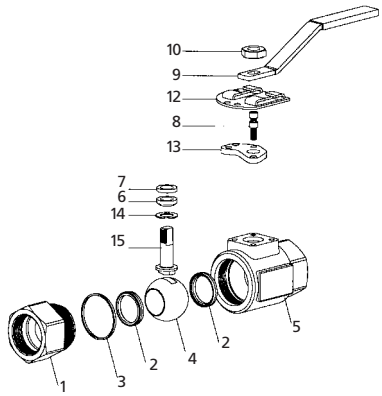

1" - 2"R 310C5 2-piece Ball Valve

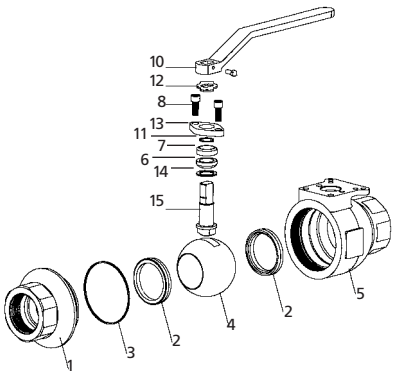

2" - 4"R 310C5 2-piece Ball Valve

Table of Contents

Scope 1
Nameplate Information 2
Storage 2
Installation 2
Operation 3
Routine Maintenance 3
Trouble Shooting 4

Item	Description
1	Tailpiece
2	Seat Ring
3	Tailpiece Gasket
4	Ball
5	Body
6	Packing
7	Compression Ring
8	Cap Screws
9	Handle/Lever
10	Lock Nut
11	Retainer Ring
12	Stop Plate
13	Bonnet Cap
14	Stem Gasket
15	Stem

Scope

The W-K-M DynaSeal 310C5 2-piece ball valve is designed to satisfy a wide range of applications. It has deep-pocketed seats, an adjustable replaceable stem packing and is available in carbon steel and stainless. The 310C5 2-piece design is offered in sizes 1/4" to 4"R and pressures up to 5000 psi depending on size and trim. It is available in threaded end connections.

Nameplate Information

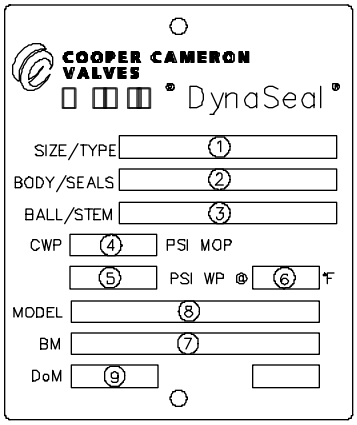

Size 2"F and Larger

Item	Description
1	Nominal valve size and type description
2	Body material symbol and Seat-seal code designation
3	Ball-Stem material designation
4	Maximum cold working pressure
5	Maximum working pressure
6	Maximum temperature
7	Assembly part number
8	Model number
9	Date of manufacture

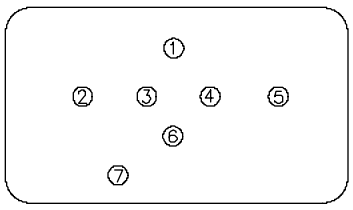

Size 2"R and Smaller

Item	Description
1	Nominal valve size and type description
2	Valve type designation
3	Body material designation
4	Seat-seal code designation
5	Ball-stem code designation
6	Maximum cold working presure
7	Date of manufacture

Storage

After valves are assembled and tested, they are placed in the full open position, flange seal surfaces and bores are greased and end protectors are installed. This will provide adequate protection for indoor storage. Extended outdoor storage requires periodic inspection and the addition of a corrosion inhibitor. Contact your CCV representative for extended storage guidelines. Valves should only be stored in the full open or full close position to prevent seat distortion.

Installation

DynaSeal 310C5 2-piece ball valves may be installed in any position with flow from either direction. However, for best service life there is a *preferred* vertical or horizontal position to maximize sealing and minimize the accumulation of sediment. In the vertical position it is preferred to have the upstream pressure from above so the weight of the ball will assist the pressure in sealing. With the run of the valve in a horizontal position, it is preferred to have the stem lying horizontal (i.e. toward the viewer) with pressure from the right. During operation, flow will act as a siphon and minimize retention of sediment.

When handling or installing a valve, keep the valve in the full open position whenever possible to prevent foreign object damage to the ball.

Threaded-End valves are installed using two pipe wrenches, one on the flats of the tailpiece adjacent to the pipe being installed and the other on the adjacent pipe. DO NOT apply wrench to the body center section as this may result in the tailpiece turning and transmitting torque to the valve body.

Field testing, if performed after the valve has been properly installed into the line, should be done in accordance with the following procedure:

Caution: Ensure that all test fluids contain corrosion inhibitors and are compatible with valve seat and seal material.

1. Preliminary Testing - Completely flush the system or the line to minimize damage to the seats and ball surface which might be caused by weld slag or other foreign matter resulting from installation procedures.
2. Line Testing - When performing this test, the valve should be in the half-open position to ensure that the body cavity is completely filled with the test media and to prevent accidental over pressure of the seats. NOTE: Line may be tested at a maximum of 1-1/2 times the valve's cold working pressure rating without consulting the factory.
3. Seat Testing - When testing the seats with the valve in the closed position, do not exceed the valve's cold working pressure rating.
4. Upon completion of testing, purge all test fluids from the valve.

Operation

DynaSeal 310C5 ball valves operate from fully open to fully close by a 90-degree turn of the handle. The handle aligned with the pipe always means the valve is open and with the handle perpendicular to the pipe means the valve is closed. Additionally, the stems have flats that align the handle and can be used to indicate ball position. The bore of the ball is parallel with the faces of the stem flats.

DynaSeal 310C5 valves may be power actuated. Pneumatic and hydraulic actuators, whether of the fail-open, fail-close, or fail-last position type, have "Open-Close" indicators on the top of each unit. On a pneumatic actuator, make sure filters and lubricators (if recommended by the actuator manufacturer) are installed prior to valve and actuator installation. Should any maintenance be necessary, obtain the part number from the unit's nameplate and contact Cooper Cameron Valves or the nearest representative.

Routine Maintenance

Due to its design and simplicity the 310C5 ball valve requires very little maintenance. It's non-lubricated, self-cleaning ball can provide reliable, leak-free performance over a long period of time.

The only preventative maintenance recommended is to periodically inspect the valve for leaks around the stem or actuator. Should a leak be noticed, the following procedure is for adjusting the packing.

Stem Packing Adjustment -

1. With an Allen wrench, snug up each of the two packing adjustment screws in a clockwise direction.
2. Snug up each screw an equal amount only as much as required to stop the leak, not to exceed the maximum specified in the following table.
3. The following table gives torque values that will seal stem packing in good condition. Torque values above this indicate seals are worn and need replacement and excessive tightening will also cause an unacceptable increase in valve stem torque.

Torque Values for Packing Adjustment Screws

Valve Size	Screw Size	Torque (Packing)	
		in-lb	(kg-m)
1/4F,3/8F,1/2R	8-32 NC	5-8	(0.06-0.09)
1/2F,3/4F,1R	10-24 NC	8-12	(0.09-0.14)
1F	1/4-20 NC	36-60	(0.4-0.7)
1-1/2F & 2R	5/16-18 NC	60-120	(0.7-1.4)
2F & 3X2	3/8-16 NC	120-180	(1.4-2.1)
3F & 4R	1/2-13 NC	180-240	(2.1-2.8)

COOPER CAMERON VALVES

Warning: Valves should be placed in a partially open position prior to working on valve or removing it from service to vent pressure or drain product that may be trapped in the body cavity. When removing threaded end valves from the line, apply wrenches in the same manner used for installation.

Troubleshooting Chart

Trouble	Probable Cause	Remedy
Will not open or close	a. Iced up due to restricted flow or low temperature. b. Pressure locked. (Condition in which the body pressure exceeds the line pressure by an excessive amount.	a. Flush out with warm material. b. Reduce valve temperature or pressurize line to rated working pressure to reduce pressure differential sufficient to operate valve.
Hard to operate	a. Accumulation or solidification of material in the body of valve. b. Swelling seats c. Corrosion between stem and valve body. d. Operator not installed properly	a. Flush valve to get material out of body. b. Install correct trim.* c. Apply penetration oil around stem. If still won't operate disassemble valve and polish stem.* d. Check operator.
Will not seal properly	a. Worn or damaged seats and/or ball. b. Foreign matter between seat and ball. c. Operator stops not properly set.	a. Replace worn parts.* (Requires valve removal and disassembly) b. Operate several times to wipe clean. c. Adjust stops to proper setting.
Valve leaking between body and tailpiece	a. Leaking tailpiece gasket b. Tailpiece and valve body are not tightened together properly.	a. Replace gasket.* (Requires valve removal and disassembly) b. Tighten parts to specified torque.*
Leaking around stem	a. Loose stem packing b. Worn or damaged stem packing.	a. Adjust stem packing screws. b. Replace stem packing.*

*Contact your CCV representative for a Repair Manual

Headquarters
Cooper Cameron Valves
16500 South Main Street
Missouri City, TX 77489-1300
Phone: 281-499-8511
800-323-9160
Fax: 281-499-6965

USA
Cooper Cameron Valves
845 S.E. 29th Street
Oklahoma City, OK 73147
Phone: 405-631-1321
Fax: 405-629-0420

Scotland
Cooper Cameron Valves
Houstoun Industrial Estate
houstoun Road
West Lothian EH54-5BZ
Livingston, Scotland
Phone: 44-1506-444-000
Fax: 44-1224-783-355

http://www.ccvalve.com

©Cooper Cameron Corporation, Cooper Cameron Valves Division, Printed in USA / 02-01 / TC--1474
W-K-M® and DynaSeal® are trademarks of Cooper Cameron Corporation

W-K-M® DynaSeal® 310C 3-piece Ball Valve

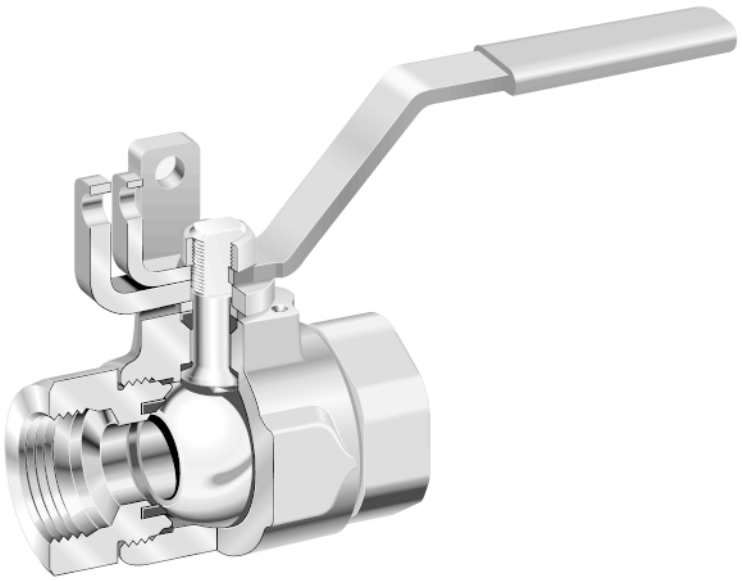

Table of Contents

Scope 1
Nameplate Information 2
Storage 2
Installation 2
Operation 3
Routine Maintenance 3
Troubleshooting 4

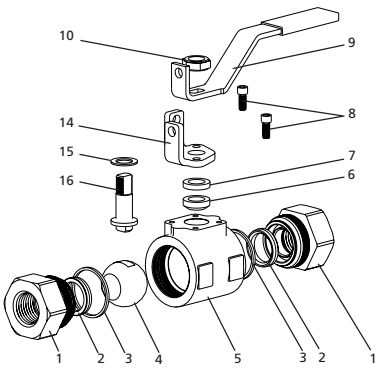

1/4" - 1" bore 310C 3-piece Ball Valve

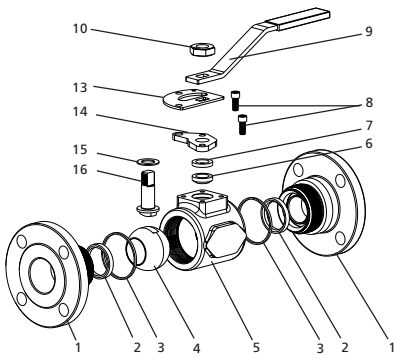

1-1/2" bore 310C 3-piece Ball Valve

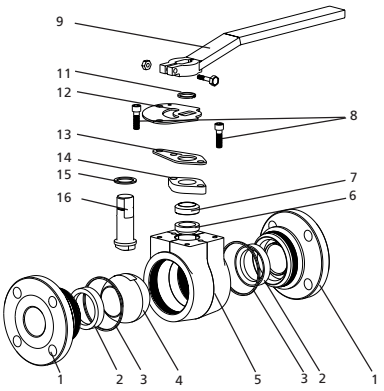

2"-3" bore 310C 3-piece Ball Valve

Item	Description
1	Tailpiece
2	Seat Ring
3	Tailpiece Gasket
4	Ball
5	Body
6	Packing
7	Compression Ring
8	Cap Screws
9	Handle/Lever
10	Lock Nut
11	Retainer Ring
12	Stop Plate
13	Locking Plate
14	Bonnet Cap
15	Stem Gasket
16	Stem

Scope

The W-K-M DynaSeal 310C 3-piece ball valve is designed to satisfy a wide range of applications. It has deep-pocketed seats, an adjustable replaceable stem packing and is available in carbon steel and stainless trims. The 310C 3-piece design is offered in sizes 1/4" to 3" full bore and 1/2" to 4" regular port and pressures up to 5000 psi depending on size. It is available with flanged, threaded and socket weld end connections.

Nameplate Information

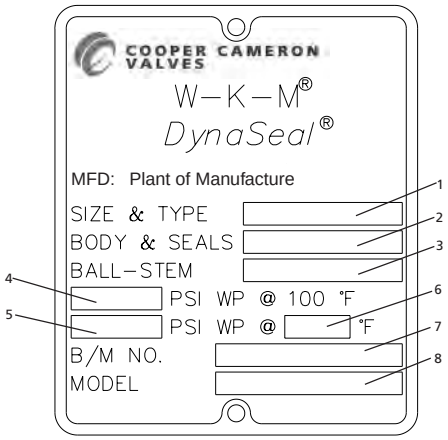

Size 2"F and Larger

Item	Description
1	Nominal valve size and type designation
2	Body material symbol and seat-seal code designation
3	Ball-Stem material designation
4	Maximum cold working pressure
5	Maximum working pressure
6	Maximum temperature
7	Assembly part number
8	Model number

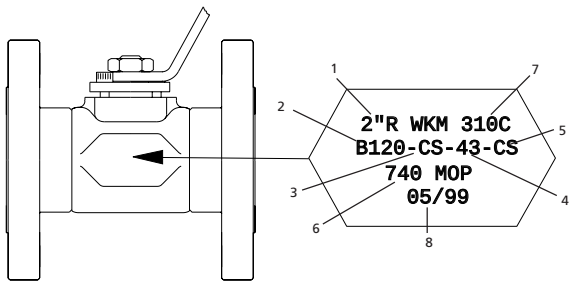

Size 2"R and Smaller

Item	Description
1	Nominal valve size
2	Valve type designation
3	Body material designation
4	Seat-Seal code designation
5	Ball-Stem material designation
6	Maximum cold working pressure
7	Model number
8	Date of manufacture

Storage

After valves are assembled and tested, they are placed in the full open position, flange seal surfaces and bores are greased and end protectors are installed. This will provide adequate protection for indoor storage. Extended outdoor storage requires periodic inspection and the addition of a corrosion inhibitor. Contact your CCV representative for extended storage guidelines. Valves should only be stored in the full open or full close position to prevent seat distortion.

Installation

DynaSeal 310C 3-piece ball valves may be installed in any position with flow from either direction. However, for best service life there is a *preferred* vertical or horizontal position to maximize sealing and minimize the accumulation of sediment. In the vertical position it is preferred to have the upstream pressure from above so the weight of the ball will assist the pressure in sealing. With the run of the valve in a horizontal position, it is preferred to have the stem lying horizontal (i.e. toward the viewer) with pressure from the right. During operation, flow will act as a siphon and minimize retention of sediment.

When handling or installing a valve, keep the valve in the full open position whenever possible to prevent foreign object damage to the ball.

Threaded-End valves are installed using two pipe wrenches, one on the flats of the tailpiece adjacent to the pipe being installed and the other on the adjacent pipe. DO NOT apply wrench to the body section or opposite side tailpiece as this may result in the tailpiece turning and transmitting torque to the valve body.

Socket Welded-End – To prevent ball and seat damage due to excessive heat or weld slag, the following procedure is recommended for welding DynaSeal 310C valves into a line:

1. Use solvent to clean grease or rust inhibitor from the ball and/or bore of the valve.

2. Electric welding equipment is preferred for all installations. However, if only oxygen-acetylene welding equipment is available, extreme caution should be taken regarding excess welding temperature.
3. Weld with ball in the "Full Open" position.
4. Make sure temperature of body/seat area does not exceed 250 F (Check with a Tempil stick).
5. Avoid rapid application of excess welding material. Weld each end of valve with a continuous bead using a 1/8 in. maximum diameter electric welding rod.

Thoroughly clean (by pigging and/or flushing) weld slag from valve bore and line before turning ball to closed position.

Flanged-End valves may be bolted into the line using two open or boxed end wrenches.

1. Threads of flange bolts and nuts should be lubricated to obtain maximum loading of bolts.
2. Finger tighten all nuts first.
3. When tightening bolts, use the crisscross method and torque each bolt to ANSI or gasket manufacturers specifications.

Field testing, if performed after the valve has been properly installed into the line, should be done in accordance with the following procedure:

Caution: Ensure that all test fluids contain corrosion inhibitors and are compatible with valve seat and seal material.

1. Preliminary Testing – Completely flush the system or the line to minimize damage to the seats and ball surface which might be caused by weld slag or other foreign matter resulting from installation procedures.
2. Line Testing – When performing this test, the valve should be in the half-open position to ensure that the body cavity is completely filled with the test media and to prevent accidental over pressure of the seats. NOTE: Line may be tested at a maximum of 1 1/2 times the valve's cold working pressure rating without consulting the factory.
3. Seat Testing – When testing the seats with the valve in the closed position, do not exceed the valve's cold working pressure rating.
4. Upon completion of testing, purge all test fluids from the valve.

Operation

DynaSeal 310C ball valves operate from fully open to fully close by a 90 degree turn of the handle. The handle aligned with the pipe always means the valve is open and with the handle perpendicular to the pipe means the valve is closed. Additionally, the stems have flats that align the handle and can be used to indicate ball position. The bore of the ball is parallel with the faces of the stem flats.

DynaSeal 310C valves may be power actuated. Pneumatic and hydraulic actuators, whether of the fail-open, fail-close, or fail-last position type, have "OPEN – CLOSE" indicators on the top of each unit. On a pneumatic actuator, make sure filters and lubricators (if recommended by the actuator manufacturer) are installed prior to valve and actuator installation. Should any maintenance be necessary, obtain the part number from the unit's nameplate and contact Cooper Cameron Valves or the nearest representative.

Routine Maintenance

Due to its design and simplicity the 310C ball valve requires very little maintenance. Its non-lubricated, self-cleaning ball can provide reliable, leak free performance over a long period of time.

The only preventative maintenance recommended is to periodically inspect the valve for leaks around the stem or actuator. Should a leak be noticed, the following procedure is for adjusting the packing.

Stem Packing Adjustment –

1. With an Allen wrench, snug up each of the two packing adjustment screws in a clockwise direction.
2. Snug up each screw an equal amount only as much as required to stop the leak, not to exceed the maximum specified in the following table.

COOPER CAMERON VALVES

3. The following table gives torque values that will seal stem packing in good condition. Torque values above this indicate seals are worn and need replacement and excessive tightening will also cause an unacceptable increase in valve stem torque.

Torque Values for Packing Adjustment Screws

Valve Size	Screw Size	Torque	
		in-lb	(kg-m)
3/8F, 1/2R	8-32 NC	5-8	(0.06-0.09)
1/2F, 3/4R, 3/4F, 1R	10-24 NC	8-12	(0.09-0.14)
1F	1/4-20 NC	12-60	(0.14-0.7)
1 1/2R, 1 1/2F, 2R	5/16-18 NC	60-120	(0.7-1.4)
2F, 3R	3/8-16 NC	120-180	(1.4-2.1)
3F, 4R	1/2-13 NC	180-240	(2.1-2.8)

Warning: Valves should be placed in a partially open position prior to working on a valve or removing it from service to vent pressure or drain product that may be trapped in the body cavity. When removing threaded end valves from the line, apply wrenches in the same manner used for installation and NOT to the valve body section or opposite side tailpiece as this may result in breaking loose the threaded tailpiece to body joint.

Troubleshooting Chart

Trouble	Probable Cause	Remedy
Will not open or close	a. Iced up due to restricted flow or low temperatures. b. Pressure locked. (Condition in which the body pressure exceeds the line pressure by an excessive amount)	a. Flush out with warm material. b. Reduce valve temperature or pressurize line to rated working pressure to reduce pressure differential sufficient to operate valve.
Hard to operate	a. Accumulation or solidification of material in the body of valve. b. Swelling seats. c. Corrosion between stem and valve body. d. Operator not installed properly.	a. Flush valve to get material out of body. b. Install correct trim.* c. Apply penetrating oil around stem. If still won't operate, disassemble valve and polish stem.* d. Check operator.
Will not seal properly	a. Worn or damaged seats and/or ball. b. Foreign matter between seat and ball. c. Operator stops not set properly.	a. Replace worn parts* (Requires valve removal and disassembly) b. Operate several times to wipe clean. c. Adjust stops to proper setting.
Valve leaking between body and tailpiece.	a. Leaking tailpiece gasket. b. Tailpiece and valve body are not tightened together properly.	a. Replace gasket. * b. Tighten parts to specified torque. *
Leaking around stem	a. Loose stem packing b. Worn or damaged stem packing.	a. Adjust stem packing screws. b. Replace stem packing.*

* Contact your CCV representative for a Repair Manual.

Headquarters
Cooper Cameron Valves
16500 South Main Street
Missouri City, TX 77489-1300
Phone: 281-499-8511 800-323-9160,
Fax: 281-499-6965

USA
Cooper Cameron Valves
845 S.W. 29th Street
Oklahoma City, OK 73147
Phone: 405-631-1321
Fax: 405-629-0420

Scotland
Cooper Cameron Valves
Houstoun Industrial Estate
Houstoun Road
West Lothian EH54 - 5BZ
Livingston, Scotland
phone: 44-1506-444-000
fax: 44-1224-783-355

http://www.ccvalve.com

W-K-M® and DynaSeal® are trademarks of Cooper Cameron Corporation

© Cooper Cameron Corporation, Cooper Cameron Valves Division, Printed in USA / 7-99 / TC1418

W-K-M® DynaSeal® 310D Ball Valve

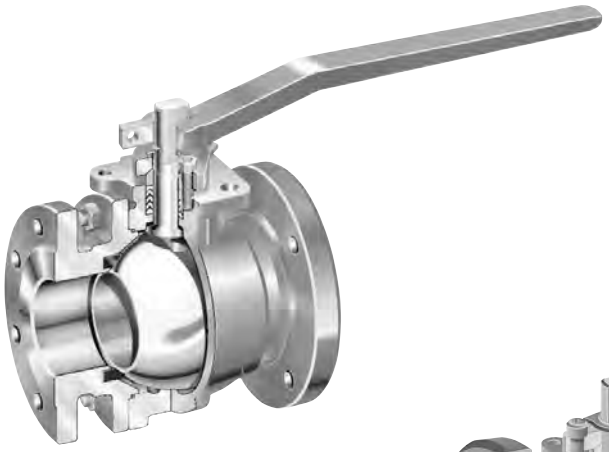

310D 2-piece Ball Valve

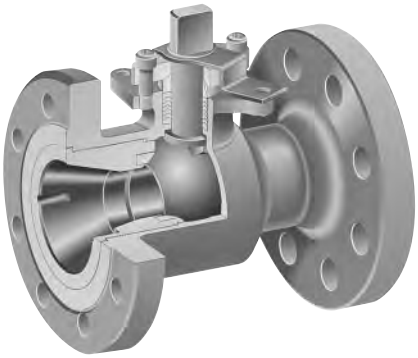

310D Unibody Ball Valve

Table of Contents

Scope 1
Nameplate Information 2
Storage 2
Installation 2
Operation 3
Routine Maintenance 3
Troubleshooting 4

Item	Description
1	Body
2	Packing
3	Compression Ring
4	Bonnet Cap
5	Cap Screws
6	Stop Plate
7	Retainer Ring
8	Lever/Handle
9	Lock Nut
10	Seat Ring
11	Stem Seal
12	Stem
13	Ball
14	Tailpiece Gasket
15	Tailpiece
16	Seat Retainer

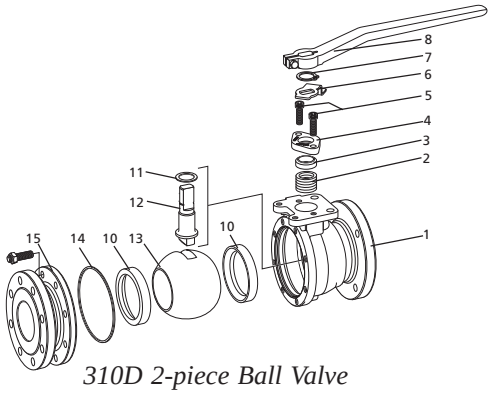

310D 2-piece Ball Valve

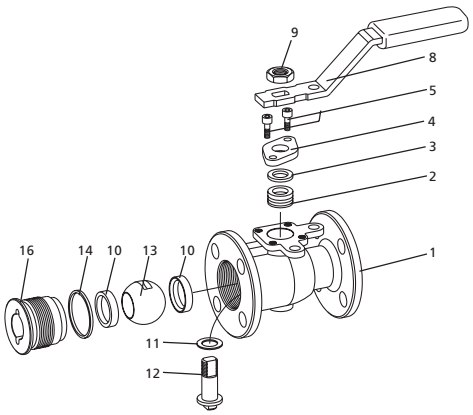

310D Unibody Ball Valve

Scope

The W-K-M DynaSeal 310D ball valve is designed to meet tougher industry requirements while maintaining key features of the W-K-M floating ball valve design. It has deep-pocketed seats, an adjustable replaceable stem packing and is available in carbon and stainless steel. The 310D design is offered in sizes 1/2" to 4"x 3" class 150 and 300 flanged ends. The 1 1/2", 2" and 3" full port valves are a two-piece design. All other sizes are the "unibody" design.

COOPER CAMERON VALVES

Nameplate Information

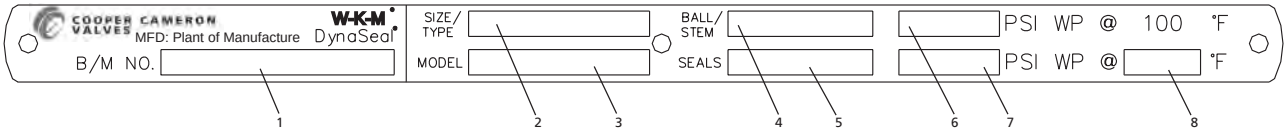

Item	Description
1	Assembly part number
2	Nominal valve size and type designation
3	Model number
4	Ball–Stem material designation
5	Seat–seal code designation
6	Maximum operating pressure
7	Maximum working pressure
8	Maximum temperature

Storage

After valves are assembled and tested, they are placed in the full open position, flange seal surfaces and bores are greased and end protectors are installed. This will provide adequate protection for indoor storage. Extended outdoor storage requires periodic inspection and the addition of a corrosion inhibitor. Contact your CCV representative for extended storage guidelines. Valves should only be stored in the full open or full close position to prevent seat distortion.

Installation

DynaSeal 310D ball valves may be installed in any position with flow from either direction. However, for best service life there is a *preferred* vertical or horizontal position to maximize sealing and minimize the accumulation of sediment. In the vertical position it is preferred to have the upstream pressure from above so the weight of the ball will assist the pressure in sealing. With the run of the valve in a horizontal position, it is preferred to have the stem lying horizontal (i.e. toward the viewer) with pressure from the right. During operation, flow will act as a siphon and minimize retention of sediment.

When handling or installing a valve, keep the valve in the full open position whenever possible to prevent foreign object damage to the ball.

Flanged-End valves may be bolted into the line using two open or boxed end wrenches.

1. Threads of flange bolts and nuts should be lubricated to obtain maximum loading of bolts.
2. Finger tighten all nuts first.
3. When tightening bolts, use the crisscross method and torque each bolt to ANSI or gasket manufacturers specifications.

Field testing, if performed after the valve has been properly installed into the line, should be done in accordance with the following procedure:

Caution: Ensure that all test fluids contain corrosion inhibitors and are compatible with valve seat and seal material.

1. Preliminary Testing – Completely flush the system or the line to minimize damage to the seats and ball surface which might be caused by weld slag or other foreign matter resulting from installation procedures.
2. Line Testing – When performing this test, the valve should be in the half-open position to ensure that the body cavity is completely filled with the test media and to prevent accidental over pressure of the seats. NOTE: Line may be tested at a maximum of 1 1/2 times the valve's cold working pressure rating without consulting the factory.
3. Seat Testing – When testing the seats with the valve in the closed position, do not exceed the valve's cold working pressure rating.

4. Upon completion of testing, purge all test fluids from the valve.

Operation

DynaSeal 310D ball valves operate from fully open to fully close by a 90 degree turn of the handle. The handle aligned with the pipe always means the valve is open and with the handle perpendicular to the pipe means the valve is closed. Additionally, the stems have flats that align the handle and can be used to indicate ball position. The bore of the ball is parallel with the faces of the stem flats.

DynaSeal 310D valves may be power actuated. Pneumatic and hydraulic actuators, whether of the fail-open, fail-close, or fail-last position type, have "OPEN – CLOSE" indicators on the top of each unit. On a pneumatic actuator, make sure filters and lubricators (if recommended by the actuator manufacturer) are installed prior to valve and actuator installation. Should any maintenance be necessary, obtain the part number from the unit's nameplate and contact Cooper Cameron Valves or the nearest representative.

Routine Maintenance

Due to its design and simplicity the 310D ball valve requires very little maintenance. It's non-lubricated, self-cleaning ball can provide reliable, leak free performance over a long period of time.

The only preventative maintenance recommended is to periodically inspect the valve for leaks around the stem or actuator. Should a leak be noticed, the following procedure is for adjusting the packing.

Stem Packing Adjustment –

1. With an Allen wrench, snug up each of the two packing adjustment screws in a clockwise direction.
2. Snug up each screw an equal amount only as much as required to stop the leak, not to exceed the maximum specified in the following table.
3. The following table gives torque values that will seal stem packing in good condition. Torque values above this indicate seals are worn and need replacement and excessive tightening will also cause an unacceptable increase in valve stem torque.

Torque Values for Packing Adjustment Screws

Valve Size	Screw Size	Torque (Chevron Packing)	
		in-lb	kg-m
1/2F, 3/4R, 1R	10-24 NC	8-12	0.09-0.14
1F, 1 1/2R	1/4-20 NC	12-60	0.14-0.7
1 1/2F, 2R	5/16-18 NC	60-120	0.7-1.4
2F, 3R	3/8-16 NC	120-180	1.4-2.1
3F, 4R	1/2-13 NC	180-240	2.1-2.8

Valve Size	Screw Size	Torque (High Temp Packing - Seal Code 18, 60A, 92H)	
		in-lb	kg-m
1/2F, 3/4R, 1R	10-24 NC	20-25	0.23-0.29
1F, 1 1/2R	1/4-20 NC	60-120	0.7-1.4
1 1/2F, 2R	5/16-18 NC	120-180	1.4-2.1
2F, 3R	3/8-16 NC	180-240	2.1-2.8
3F, 4R	1/2-13 NC	240-300	2.8-3.5

Warning: Valves should be placed in a partially open position prior to working on a valve or removing it from service to vent pressure or drain product that may be trapped in the body cavity.

Troubleshooting Chart

Trouble	Probable Cause	Remedy
Will not open or close	a. Iced up due to restricted flow or low temperatures. b. Pressure locked. (Condition in which the body pressure exceeds the line pressure by an excessive amount)	a. Flush out with warm material. b. Reduce valve temperature or pressurize line to rated working pressure to reduce pressure differential sufficient to operate valve.
Hard to operate	a. Accumulation or solidification of material in the body of valve. b. Swelling seats. c. Corrosion between stem and valve body. d. Operator not installed properly. e. Body bolts adjusted unequally. (Two piece design)	a. Flush valve to get material out of body. b. Install correct trim.* c. Apply penetrating oil around stem. If still won't operate, disassemble valve and polish stem.* d. Check operator. e. Loosen bolts after removing from service and adjust equally to specified torque.*
Will not seal properly	a. Worn or damaged seats and/or ball. b. Foreign matter between seat and ball. c. Operator stops not set properly.	a. Replace worn parts* (Requires valve removal and disassembly) b. Operate several times to wipe clean. c. Adjust stops to proper setting.
Valve leaking between body and tailpiece.	a. Leaking tailpiece gasket. b. Tailpiece or seat retainer (unibody) and valve body are not tightened together properly.	a. Replace gasket. * b. Tighten parts to specified torque. *
Leaking around stem	a. Loose stem packing b. Worn or damaged stem packing.	a. Adjust stem packing screws. b. Replace stem packing.*

* Contact your CCV representative for a Repair Manual.

Headquarters
Cooper Cameron Valves
16500 South Main Street
Missouri City, TX 77489-1300
Phone: 281-499-8511 800-323-9160,
Fax: 281-499-6965

USA
Cooper Cameron Valves
845 S.W. 29th Street
Oklahoma City, OK 73147
Phone: 405-631-1321
Fax: 405-629-0420

Scotland
Cooper Cameron Valves
Houstoun Industrial Estate
Houstoun Road
West Lothian EH54 - 5BZ
Livingston, Scotland
Phone: 44-1506-444-000
Fax: 44-1224-783-355

http://www.ccvalve.com

W-K-M® and DynaSeal® are trademarks of Cooper Cameron Corporation

© Cooper Cameron Corporation, Cooper Cameron Valves Division, Printed in USA / 8-99 / TC1416

Installation, Operation and Maintenance Manual

W-K-M® DynaSeal® 310F 2-Piece Flanged End Ball Valve

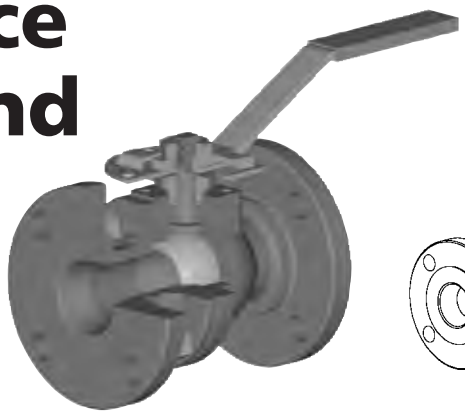

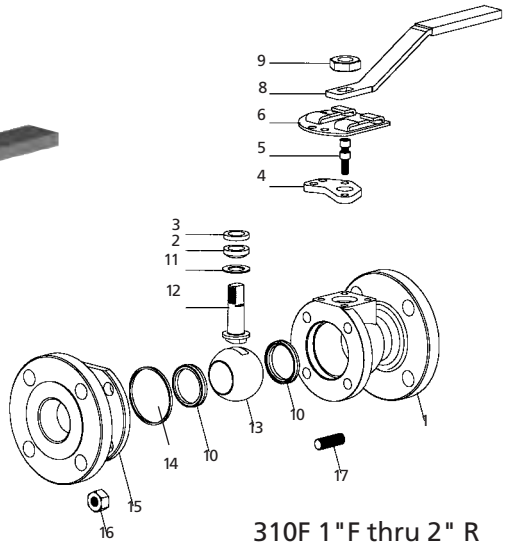

310F 1"F thru 2" R

Table of Contents

Scope 1
Nameplate Information 2
Storage 2
Installation 2-3
Operation 3
Routine Maintenance 3
Trouble Shooting 4

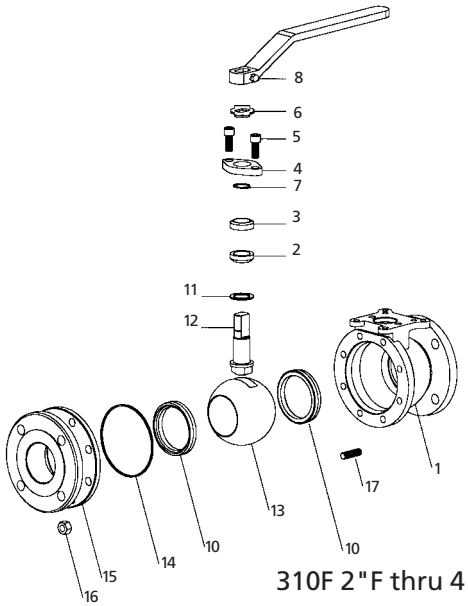

310F 2"F thru 4" R

Item	Description
1	Body
2	Packing
3	Compression Ring
4	Bonnet Cap
5	Cap Screws
6	Stop Plate
7	Retainer Ring
8	Handle/Lever
9	Lock Nut
10	Seat Ring
11	Stem Seal
12	Stem
13	Ball
14	Tailpiece Gasket
15	Tailpiece
16	Nut
17	Stud

Scope

The W-K-M DynaSeal 310F ball valve is designed to meet tougher industry requirements while maintaining key features of the W-K-M floating ball valve. It has deep-pocketed seats, an adjustable, replaceable stem packing and is available in carbon steel and stainless. The 310F is offered in sizes 1F" to 4"R and class 150, 300 and 600 flanged ends.

Nameplate Information

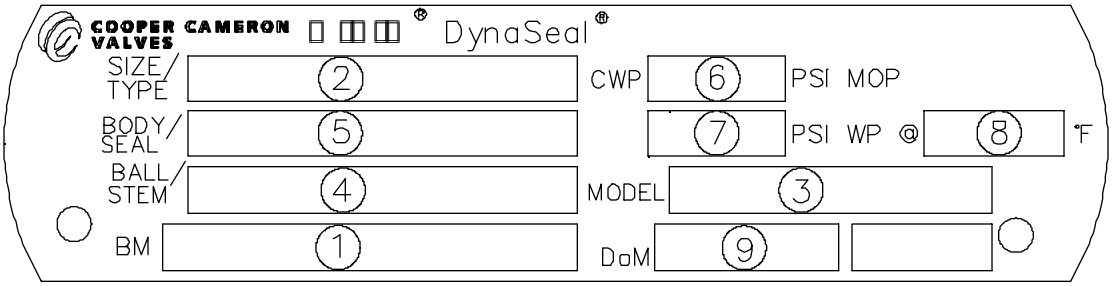

Item	Description
1	Assembly part number
2	Nominal valve size and type designation
3	Model number
4	Ball-Stem material designation
5	Body & Seat-seal code designation

Item	Description
6	Maximum operating pressure
7	Maximum working pressure
8	Maximum temperature
9	Date of manufacture

Storage

After valves are assembled and tested, they are placed in the full open position, flange seal surfaces and bores are greased and end protectors are installed. This will provide adequate protection for indoor storage. Extended outdoor storage requires periodic inspection and the addition of a corrosion inhibitor. Contact your CCV representative for extended storage guidelines. Valves should only be stored in the full open or full close position to prevent seat distortion.

Installation

DynaSeal 310F ball valves may be installed in any position with flow from either direction. However, for best service life there is a *preferred* vertical or horizontal position to maximize sealing and minimize the accumulation of sediment. In the vertical position it is preferred to have the upstream pressure from above so the weight of the ball will assist the pressure in sealing. With the run of the valve in a horizontal position, it is preferred to have the stem lying horizontal (i.e. toward the viewer) with pressure from the right. During operation, flow will act as a siphon and minimize retention of sediment.

When handling or installing a valve, keep the valve in the full open position whenever possible to prevent foreign object damage to the ball.

Flanged-End valves may be bolted into the line using two open or boxed end wrenches.

1. Threads of flange bolts and nuts should be lubricated to obtain maximum loading of bolts.
2. Finger tighten all nuts first.
3. When tightening bolts, use the crisscross method and torque each bolt to ANSI or gasket manufacturer specification.

Field testing, if performed after the valve has been properly installed into the line, should be done in accordance with the following procedure:

Caution: Ensure that all test fluids contain corrosion inhibitors and are compatible with valve seat and seal material.

1. Preliminary Testing - Completely flush the system or the line to minimize damage to the seats and ball surface which might be caused by weld slag or other foreign matter resulting from installation procedures.
2. Line Testing - When performing this test, the valve should be in the half-open position to ensure that the body cavity is completely filled with the test media and to prevent accidental over pressure of the seats. NOTE: Line may be tested at a maximum of 1-1/2 times the valve's cold working pressure rating without consulting the factory.
3. Seat Testing - When testing the seats with the

valve in the closed position, do not exceed the valve's cold working pressure rating.
4. Upon completion of testing, purge all test fluids from the valve.

Operation

DynaSeal 310F ball valves operate from fully open to fully close by a 90-degree turn of the handle. The handle aligned with the pipe always means the valve is open and with the handle perpendicular to the pipe means the valve is closed. Additionally, the stems have flats that align the handle and can be used to indicate ball position. The bore of the ball is parallel with the faces of the stem flats.

DynaSeal 310F valves may be power actuated. Pneumatic and hydraulic actuators, whether of the fail-open, fail-close, or fail-last position type, have "Open-Close" indicators on the top of each unit. On a pneumatic actuator, make sure filters and lubricators (if recommended by the actuator manufacturer) are installed prior to valve and actuator installation. Should any maintenance be necessary, obtain the part number from the unit's nameplate and contact Cooper Cameron Valves or the nearest representative.

Routine Maintenance

Due to its design and simplicity the 310F ball valve requires very little maintenance. It's non-lubricated, self-cleaning ball can provide reliable, leak-free performance over a long period of time.

The only preventative maintenance recommended is to periodically inspect the valve for leaks around the stem or actuator. Should a leak be noticed, the following procedure is for adjusting the packing.

Stem Packing Adjustment -
1. With an Allen wrench, snug up each of the two packing adjustment screws in a clockwise direction.
2. Snug up each screw an equal amount only as much as required to stop the leak, not to exceed the maximum specified in the following table.
3. The following table gives torque values that will seal stem packing in good condition. Torque values above this indicate seals are worn and need replacement and excessive tightening will also cause an unacceptable increase in valve stem torque.

Torque Values for Packing Adjustment Screws

Valve Size	Screw Size	Torque (Packing)	
		in-lb	(kg-m)
1F	1/4-20 NC	36-60	(0.4-0.7)
1-1/2F & 2R	5/16-18 NC	60-120	(0.7-1.4)
2F & 3x2	3/8-16 NC	120-180	(1.4-2.1)
3F & 4R	1/2-13 NC	180-240	(2.1-2.8)

COOPER CAMERON VALVES

Warning: Valves should be placed in a partially open position prior to working on valve or removing it from service to vent pressure or drain product that may be trapped in the body cavity.

Troubleshooting Chart

Trouble	Probable Cause	Remedy
Will not open or close	a. Iced up due to restricted flow or low temperature. b. Pressure locked. (Condition in which the body pressure exceeds the line pressure by an excessive amount.	a. Flush out with warm material. b. Reduce valve temperature or pressurize line to rated working pressure to reduce pressure differential sufficient to operate valve.
Hard to operate	a. Accumulation or solidification of material in the body of valve. b. Swelling seats c. Corrosion between stem and valve body. d. Operator not installed properly	a. Flush valve to get material out of body. b. Install correct trim.* c. Apply penetration oil around stem. If still won't operate disassemble valve and polish stem.* d. Check operator.
Will not seal properly	a. Worn or damaged seats and/ or ball. b. Foreign matter between seat and ball. c. Operator stops not properly set.	a. Replace worn parts.* (Requires valve removal and disassembly) b. Operate several times to wipe clean. c. Adjust stops to proper setting.
Valve leaking between body and tailpiece	a. Leaking tailpiece gasket b. Tailpiece and valve body are not tightened together properly.	a. Replace gasket.* (Requires valve removal and disassembly) b. Tighten parts to specified torque.*
Leaking around stem	a. Loose stem packing b. Worn or damaged stem packing.	a. Adjust stem packing screws. b. Replace stem packing.*

*Contact your CCV representative for a Repair Manual

Headquarters
Cooper Cameron Valves
16500 South Main Street
Missouri City, TX 77489-1300
Phone: 281-499-8511
800-323-9160
Fax: 281-499-6965

USA
Cooper Cameron Valves
845 S.E. 29th Street
Oklahoma City, OK 73147
Phone: 405-631-1321
Fax: 405-629-0420

Scotland
Cooper Cameron Valves
Houstoun Industrial Estate
houstoun Road
West Lothian EH54-5BZ
Livingston, Scotland
Phone: 44-1506-444-000
Fax: 44-1224-783-355

http://www.ccvalve.com

©Cooper Cameron Corporation, Cooper Cameron Valves Division, Printed in USA / 02-01 / TC-1473
W-K-M® and DynaSeal® are trademarks of Cooper Cameron Corporation

W-K-M® DynaSeal® 210A / 210L Ball Valve

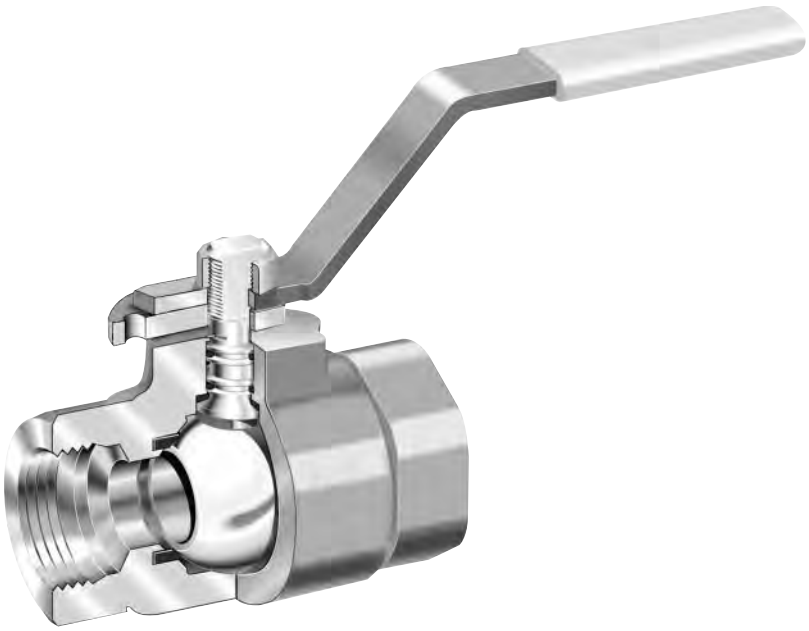

Table of Contents

Scope 1
Nametag Information 2
Storage 2
Installation 2
Operation 3
Routine Maintenance 3
Troubleshooting 3

Item	Description
1	Body
2	Grease Fitting[1]
3	Seat O-Ring[2]
4	Seat Ring
5	Ball
6	Tailpiece Gasket
7	Tailpiece
8	Stem
9	Stem Seal
10	Stem O-Rings
11	Handle[3]
12	Lock Nut[3] (or Retainer Clip)
13	Retainer Ring
14	Locking Plate
15	Stop Pin

[1] Old option (discontinued 1998), not on all valves.

[2] Used with old style delrin seat with notched back. New "43" delrin seat does not require o-ring, nor does the "02" or "42" teflon seat.

[3] Optional

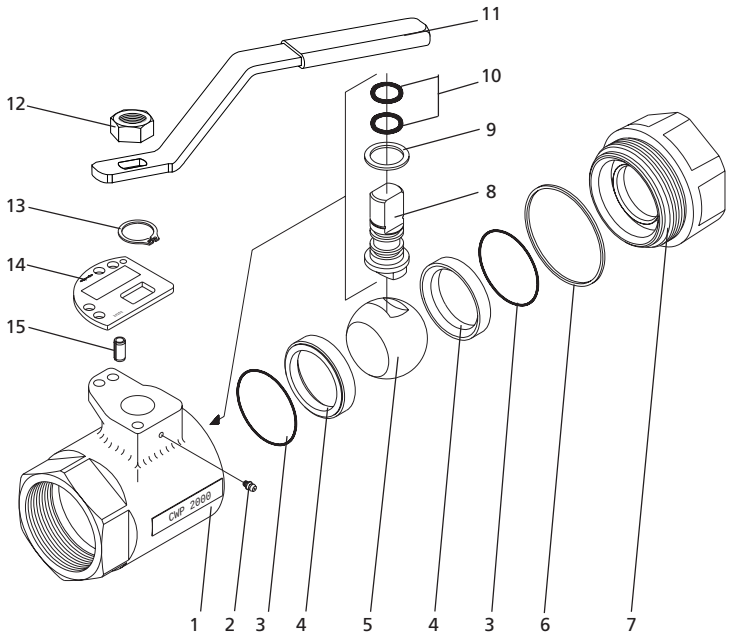

210A Ball Valve

Scope

The W-K-M DynaSeal 210 floating ball valve is a rugged, but economical ductile iron ball valve ideal for oilfield applications. It has deep-pocketed seats, double "O" ring stem seals and is available with API Line Pipe threaded outlets. The 210A and 210L are a 2 piece, threaded end valve design.The 210A is offered in sizes 1" to 4"x 3"and pressure ratings 1000 psi, 1500 psi and 2000 psi. The 210L is offered in 2", 3" and 4" reduced port sizes with a maximum 1000 psi pressure rating.

Nametag Information

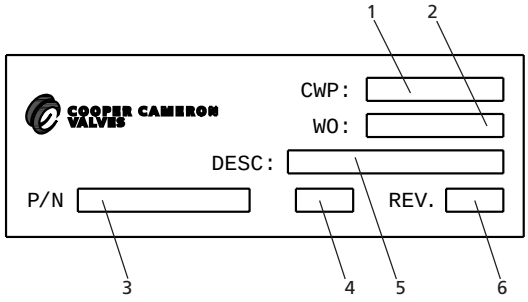

Item	Description
1	Maximum cold working pressure
2	Work order number
3	Assembly part number
4	NACE compliance mark
5	Valve size and type (model and body trim designation
6	Revision level

Storage

After valves are assembled and tested, they are placed in the full open position, bores are greased and end protectors are installed. This will provide adequate protection for indoor storage. Extended outdoor storage requires periodic inspection and the addition of a corrosion inhibitor. Contact your CCV representative for extended storage guidelines. Valves should only be stored in the full open or full close position to prevent seat distortion.

Installation

DynaSeal 210 ball valves may be installed in any position with flow from either direction. However, for best service life there is a *preferred* vertical or horizontal position to maximize sealing and minimize the accumulation of sediment. In the vertical position it is preferred to have the upstream pressure from above so the weight of the ball will assist the pressure in sealing. With the run of the valve in a horizontal position, it is preferred to have the stem lying horizontal (i.e. toward the viewer) with pressure from the right. During operation, flow will act as a siphon and minimize retention of sediment.

When handling or installing a valve, keep the valve in the full open position whenever possible to prevent foreign object damage to the ball.

Threaded-End valves are installed using two pipe wrenches, one on the flats of the tailpiece or body and the other on the adjacent pipe. (ie. DO NOT apply wrench to the body section when making up pipe to the tailpiece as this may result in breaking loose the threaded tailpiece-to–body joint). Conventional pipe thread compound is recommended when installing 210, ductile ball valves. Teflon tape can cause threads to gall. Field testing, if performed after the valve has been properly installed into the line, should be done in accordance with the following procedure:

Caution: Ensure that all test fluids contain corrosion inhibitors and are compatible with valve seat and seal material.

1. Preliminary Testing – Completely flush the system or the line to minimize damage to the seats and ball surface which might be caused by weld slag or other foreign matter resulting from installation procedures.
2. Line Testing – When performing this test, the valve should be in the half-open position to ensure that the body cavity is completely filled with the test media and to prevent accidental over pressure of the seats. NOTE: Line may be tested at a maximum of 1 1/2 times the valve's cold working pressure rating without consulting the factory.
3. Seat Testing – When testing the seats with the valve in the closed position, do not exceed the valve's cold working pressure rating.
4. Upon completion of testing, purge all test fluids from the valve.

Operation

DynaSeal 210 ball valves operate from fully open to fully close by a 90 degree turn of the handle. The handle aligned with the pipe always means the valve is open and with the handle perpendicular to the pipe means the valve is closed. Additionally, the stems have flats that align the handle and can be used to indicate ball position. The bore of the ball is parallel with the faces of the stem flats.

DynaSeal 210 valves may be power actuated. Pneumatic and hydraulic actuators, whether of the fail-open, fail-close, or fail-last position type, have "OPEN – CLOSE" indicators on the top of each unit. On a pneumatic actuator, make sure filters and lubricators (if recommended by the actuator manufacturer) are installed prior to valve and actuator installation. Should any maintenance be necessary, obtain the part number from the unit's nameplate and contact Cooper Cameron Valves or the nearest representative.

Routine Maintenance

Due to its design and simplicity the 210 ball valve requires very little maintenance. Its non-lubricated, self-cleaning ball can provide reliable, leak free performance over a long period of time.

Warning: Valves should be placed in a partially open position prior to working on a valve or removing it from service to vent pressure or drain product that may be trapped in the body cavity. When removing threaded end valves from the line, apply wrenches in the same manner used for installation and NOT to the valve body section as this may result in breaking loose the threaded tailpiece to body joint.

Troubleshooting Chart

Trouble	Probable Cause	Remedy
Will not open or close	a. Iced up due to restricted flow or low temperatures. b. Pressure locked. (Condition in which the body pressure exceeds the line pressure by an excessive amount)	a. Flush out with warm material. b. Reduce valve temperature or pressurize line to rated working pressure to reduce pressure differential sufficient to operate valve.
Hard to operate	a. Accumulation or solidification of material in the body of valve. b. Swelling seats. c. Corrosion between stem and valve body d. Operator not installed properly.	a. Flush valve to get material out of body. b. Install correct trim.* (Requires valve removal and disassembly) c. Apply penetrating oil around stem. If still won't operate, disassemble valve and polish stem.* d. Check operator.
Will not seal properly	a. Worn or damaged seats and/or ball. b. Foreign matter between seat and ball. c. Operator stops not set properly.	a. Replace worn parts* (Requires valve removal and disassembly) b. Operate several times to wipe clean. c. Adjust stops to proper setting.
Valve leaking between body and tailpiece	a. Leaking tailpiece gasket. b. Tailpiece and body are not tightened together properly.	a. Replace gasket.* (Requires valve removal and disassembly) b. Tighten parts to specified torque. *
Leaking around stem	a. Worn or damaged stem seals.	a. Replace O-ring stem seals.* (Requires valve removal and disassembly)

*Contact your CCV representative for a repair manual.

Headquarters

Cooper Cameron Valves
16500 South Main Street
Missouri City, TX
77489-1300

Phone: 281-499-8511
800-323-9160
Fax: 281-499-6965

USA

Cooper Cameron Valves
845 S.W. 29th Street
Oklahoma City, OK
73147

Phone: 405-631-1321
Fax: 405-629-0420

Scotland

Cooper Cameron Valves
Houstoun Industrial Estate
Houstoun Road
West Lothhian EH54 - 5BZ
Livingston, Scotland

Phone: 44-1506-444-000
Fax: 44-1224-783-355

http://www.ccvalve.com

W-K-M® and DynaSeal® are trademarks of Cooper Cameron Corporation

© Cooper Cameron Corporation, Cooper Cameron Valves Division, Printed in USA / 9-99 / TC1414

W-K-M Floating Ball Valves

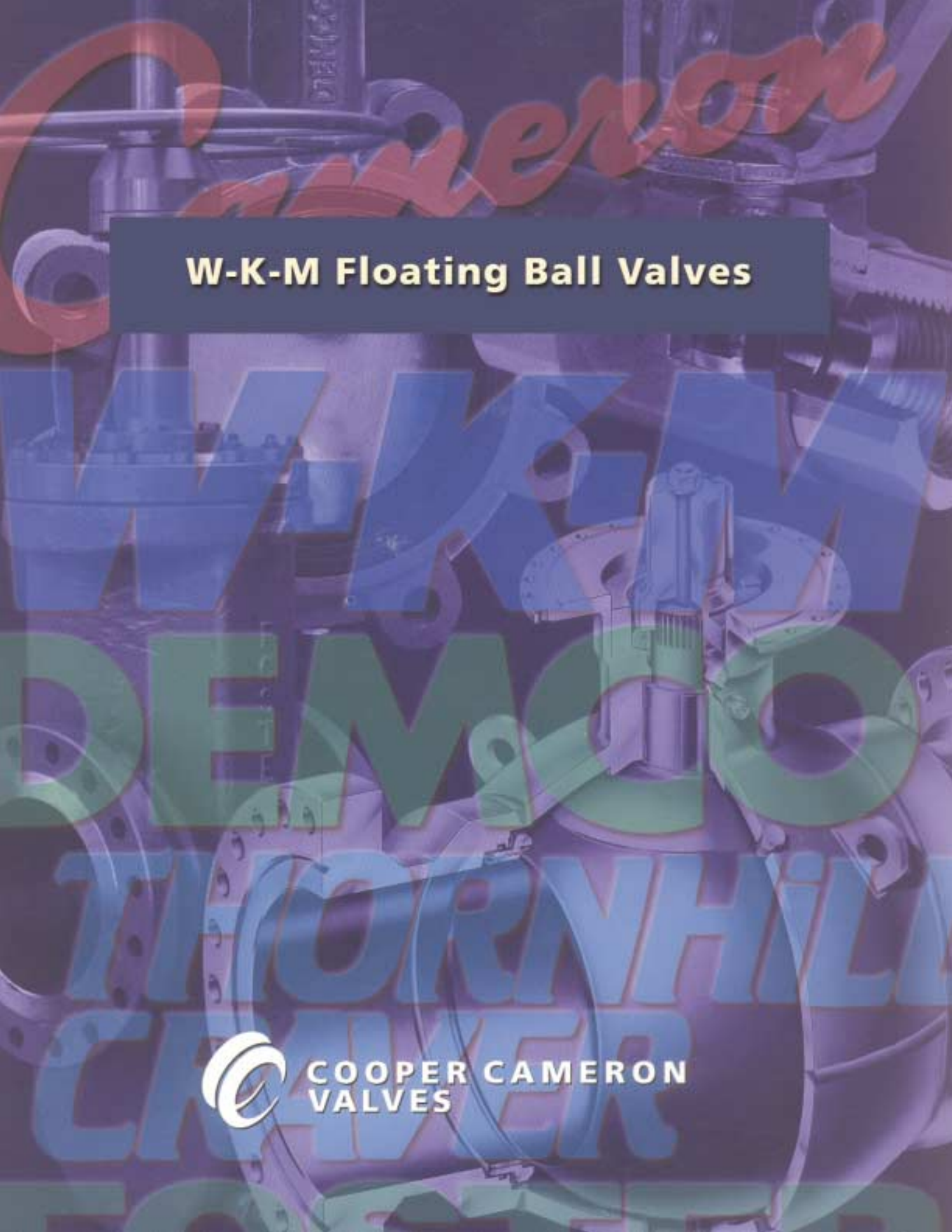

COOPER CAMERON VALVES

Table of Contents

W-K-M Floating Ball Valves

Features & Benefits

DynaSeal 310 2-Piece 4"–14"x12" 1
DynaSeal 310 2-Piece 1/4"–4"x3" 3
DynaSeal 310D Unibody 1/2"–4"x3" 5
DynaSeal 210A Threaded: Ductile Iron 7
DynaSeal 210D Unibody: Ductile Iron 32
DynaSeal 210L Threaded: Ductile Iron 33

Product Specifications

DynaSeal 310 2-Piece 4"–14"x12" 9
- Weights, Stem Torques and Cv Data 14

DynaSeal 310 2-Piece 1/4"–4"x3"
- Trim Details 15
- Dimensional Data 16
- Weights, Stem Torques and Cv Data 17

DynaSeal 310: How to Order 19
- Base Catalog Figure Numbers 20
- Trim Details: Seat and Seal Combinations: Figure Number Code 21
- Trim Details: Pressure/Temperature Charts 22
- Body Ratings: Pressure/Temperature Charts 23
- DynaSeal 310 2-Piece 1/4"–4"x3" 24
- Parts Detail Threaded End 24
- Parts Detail Flanged End 25

DynaSeal 310D Unibody 1/2"–4"x3"
- Parts Detail 26
- Trim Charts 27
- Dimensional Data 28
- Weights and Cv Data 29

DynaSeal 210A Threaded: Ductile Iron 30
DynaSeal 210D Unibody: Ductile Iron 32
DynaSeal 210L Threaded: Ductile Iron 1000#MOP 33

Terms and Conditions 35
Trademark Information 37

A premium quality floating ball valve that has proven itself in a wide variety of oilfield, chemical-petrochemical and hydrocarbon processing applications.

W-K-M DynaSeal® 310 2-piece floating ball valves satisfy a wide range of applications. Available in a variety of standard and optional materials, they may be specified in sizes from 4" to 14" and pressure ratings of 150 and 300.

Engineered for heavy duty, maintenance -free performance, the DynaSeal 310 2-piece is commonly selected for a variety of applications in virtually any industry.

Chemical and petrochemical plants

The list of chemical and petrochemical applications for DynaSeal ball valves is limitless. They are serving in many plastic plants handling such slurries as 40% vinyl chloride, in high pressure catalyst lines and in processes handling dry ladings such as polyethylene and polystyrene powders. There are hundreds of applications in such plants where DynaSeals are providing efficient services.

Refining

DynaSeal is the workhorse of the refining industry. The many metal seats, seals, and available trims offer the versatility needed to handle the wide variety of products used in the refining process.

High temperature service

Special high temperature trims are available for DynaSeal 310 ball valves which provide for service to 600˚F (316˚C). This trim is excellent for steam service, hot oil, heat transfer fluids, boiler feedwater and similar applications.

Low temperature service

Standard trims accommodate temperatures to -20˚F (-29˚C). For temperatures to -50˚F (-46˚C); please consult the factory.

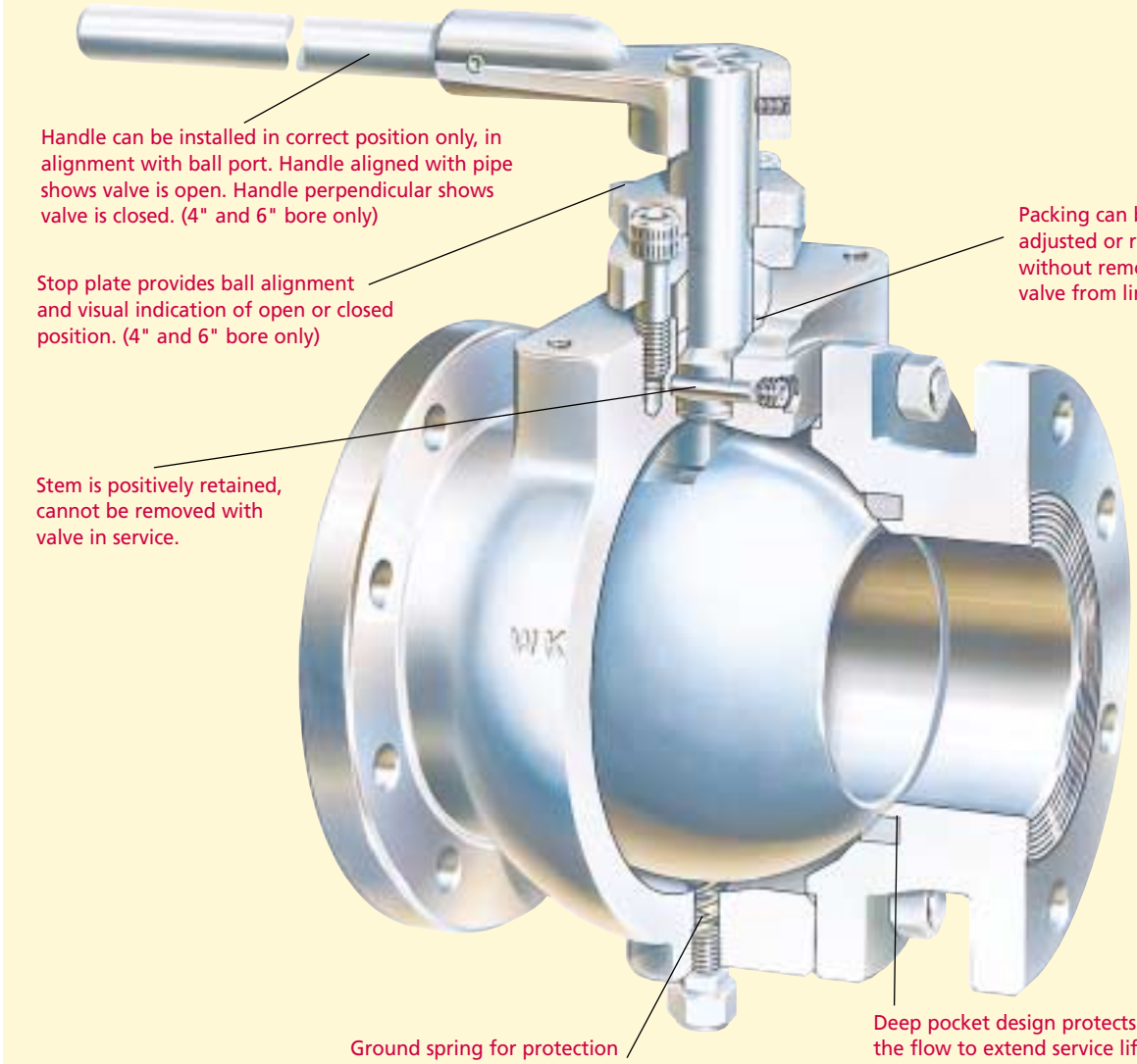

Features/Benefits

A ***Deep recessed seats***

The seat is recessed into a deep machined pocket, which serves to surround and protect the seat on all sides. This design eliminates cold flow into the valve conduit where it can be damaged by the action of the ball or the flow medium. The result is an extremely long service life.

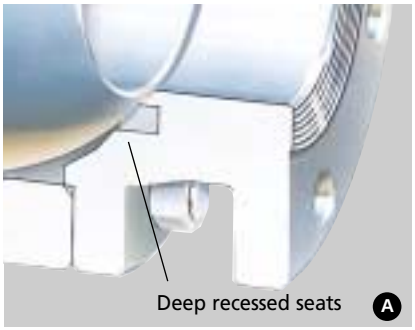

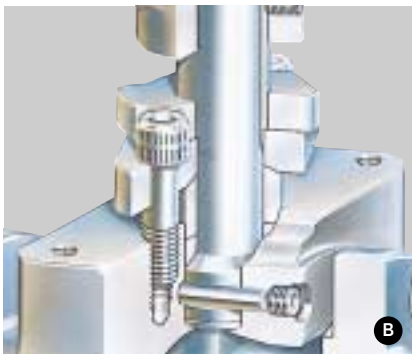

B ***Adjustable, replaceable packing***

The in-line valve stem packing consists of PTFE-impregnated graphite with an impervious metal barrier, and a secondary tapered metal back-up. The packing is field adjustable and never requires lubrication. The packing and the stainless steel cap can be replaced without removing the valve from line.

Fugitive emissions

DynaSeal 310 ball valves can be supplied and certified to meet the requirements of fugitive emissions as regulated by The 1990 Amendment to the Clean Air Act.

Positively retained stem

The stem is positively retained with a retainer pin. It cannot be removed with the valve in service.

Indicator handle

The design of the handle permits installation on the stem in the correct position only — in alignment with the ball port. When the handle is aligned with the pipe, the valve is open. When the handle is perpendicular to the pipe, the valve is closed.

Floating ball design delivers tight seal

The ground and polished ball is free to float, and mates perfectly with the conical seats for a positive, leakproof seal. Self-cleaning and self-adjusting, the ball is also pressure-activated — the higher the line pressure, the tighter the seal.

Maintenance-free performance

Under most conditions, the DynaSeal 310 floating ball valve will provide years of trouble-free service with no maintenance required. In some severe applications, such as handling extremely abrasive slurries at high temperatures, it may be necessary to replace the seats occasionally. Seat and seal kits are available and replacement can be done easily with ordinary tools.

Fire-tested for safety

All DynaSeal 310 valves are qualified under API standard 607. The pocketed seat and locked-in stem design contributes to its excellent fire tested characteristics. Should the soft seats be destroyed by fire, the ball floats downstream, providing a tight metal-to-metal seal against the lip of the seat pocket. If the tailpiece seals are destroyed, the metal-to-metal tailpiece to body connection retards external leakage.

C ***Actuation-friendly***

A variety of actuator types can be easily installed, including pneumatic, hydraulic, diaphragm, vane, electro-mechanical and electro-hydraulic. Cooper Cameron Valves can provide a total package of valves, actuators, and support services to meet your needs.



W-K-M DynaSeal 310 Ball Valve with Pneumatic Actuator

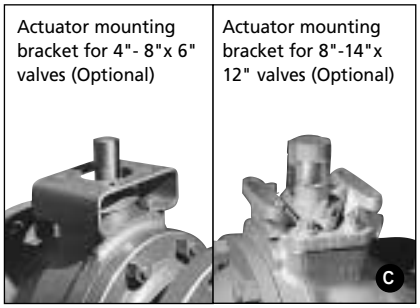

SPECIFICATIONS

See page 9 for technical specifications.

Sizes

4" - 12" full bore; 6" - 14" regular port

Working Pressures

150 and 300 pressure classes

Operating Temperatures

From -50°F to +600°F (-46°C to +316°C).

End Connections

Class 150, 300 flanged and 300 butt weld

Standard Materials

Body: Stainless steel and carbon steel

Ball/Stem: Stainless steel, carbon steel and monel

Seat/seal trims: TFE, filled TFE, HPT-2, 316 stainless steel with chromium oxide, 316 stainless steel with F6 hard face

A premium quality floating ball valve that has proven itself in a wide variety of oilfield, chemical, petrochemical and hydrocarbon processing applications has been re-designed to current industry standards and practices.

The DynaSeal 310 2-piece floating ball valves continue to satisfy a wide range of applications. They are available in a variety of standard and optional materials, in sizes from 1/4" to 4" and working pressures to 5,000 psi. Engineered for heavy duty, maintenance-free performance, the DynaSeal 310 2-piece valve is preferred for use in critical applications.

Sour Oil and Gas Service

DynaSeal ball valves have served for years in gathering lines, manifolds, and field processing units in sour oil and gas fields. They can be trimmed to conform with NACE MR-01-75.

Features/Benefits

Ⓐ ***Deep recessed seats***

The DynaSeal 310 2-piece valve seat is protected in a machined recess or deep pocket that surrounds and protects the seat. This design eliminates cold flow into the valve conduit and avoids potential seat damage from ball movement or flow media. Two new seats are introduced with the new two piece valve design.

Trim 43 seats are manufactured of Acetal Plastic and rated to 3000 psi MOP and working temperatures to 220˚F. These seats are designed to handle the most demanding applications. Of course, these seats are designed to perform in the deep seat pockets pioneered and proven by W-K-M. These seats are designed to flex under pressure and provide a consistent range of low torque operations. They provide a full-face seal against the ball and

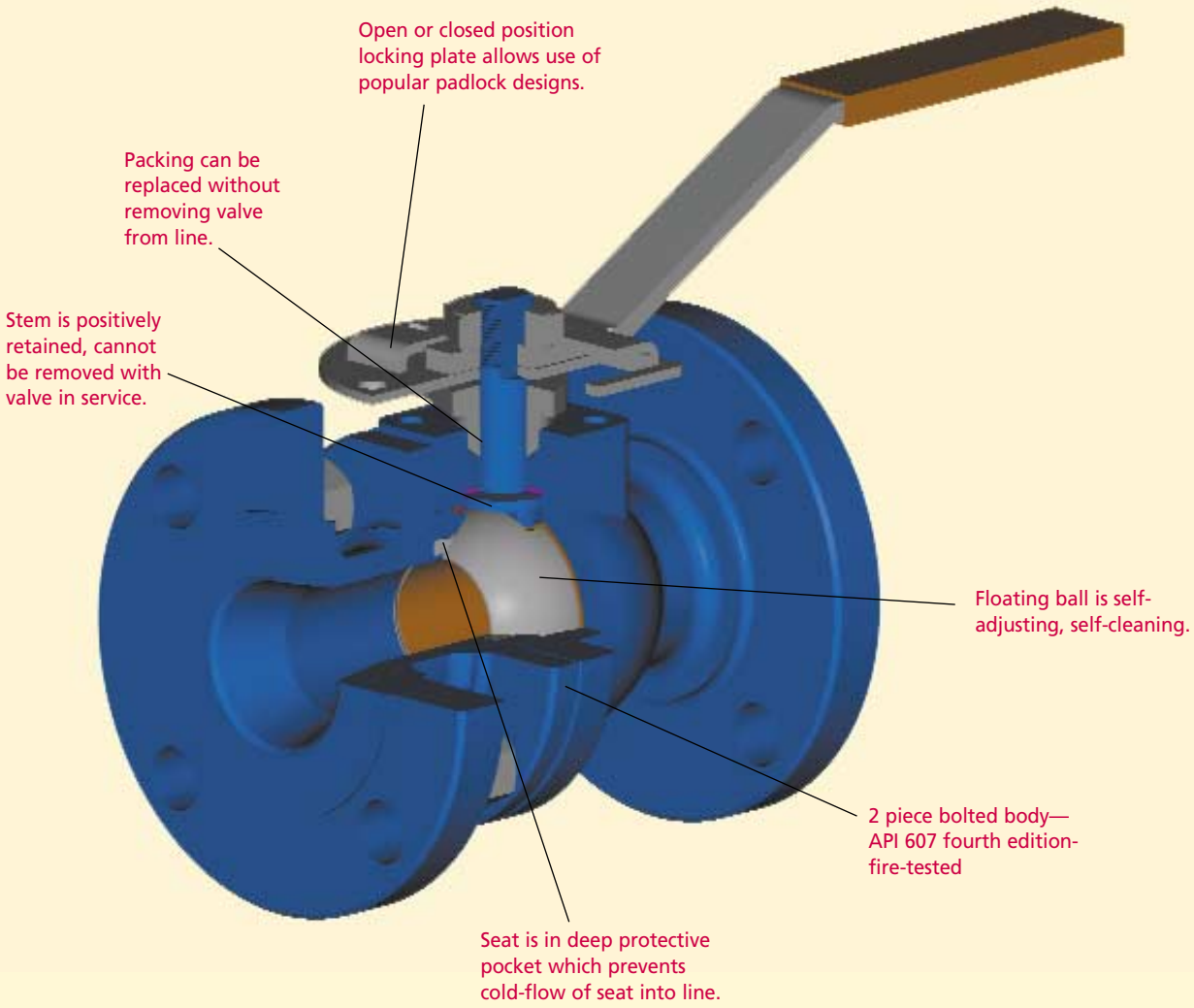

DynaSeal 310 2-piece Flanged

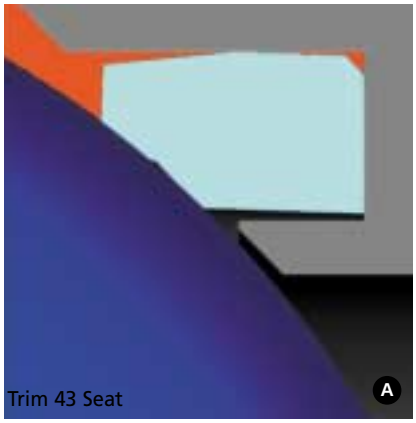

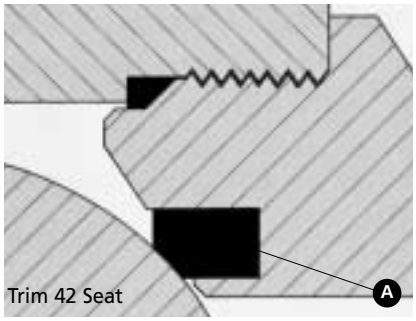

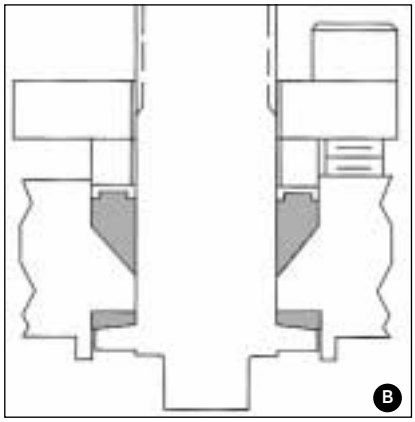



Dynaseal 310 2-piece threaded body: threaded ends

multiple seals against the top and back of the pocket to provide a positive seal.

Trim 42 seats are manufactured of filled TFE and rated to 1500 psi MOP. With working temperatures to 500˚F and low torque operation these seats satisfy even the most difficult of processing requirements. These seats are designed to fill the deep seat pockets characterisitic of the W-K-M floating ball valve design. They are designed to provide a full-face seal against the ball and fill the pocket to prevent any possibility of downstream leakage.

B Adjustable, replaceable packing

The in-line valve stem packing consists of PTFE-impregnated graphite with an impervious metal barrier, and a secondary tapered metal back-up. The packing is field adjustable and never requires lubrication. The packing and the stainless steel cap can be replaced without removing the valve from the line.

Positively retained stem

The stem is positively retained with a shoulder. It cannot be removed with the valve in service.

Floating ball design delivers tight seal

The ground and polished ball is free to float, and mates perfectly with the conical seats for a positive, leakproof seal. Self-cleaning and self-adjusting, the ball is also pressure-activated — the higher the line pressure, the tighter the seal.

Maintenance-free performance

Under most conditions, the DynaSeal floating ball valve will provide years of trouble-free service with no maintenance required. However, seat and seal kits are available for replacement if necessary.

The DynaSeal 310 2-piece valve is designed, manufactured and tested in full compliance with ANSI B16.34 and clearly marked as such

Fire-tested for safety

DynaSeal 310 2-piece valves, in bore size 3” and smaller, are fire-tested to API 607, fourth edition and certified by an independent, third party witness. The pocketed seat and locked-in stem design contributes to its excellent fire test characteristics. Should the soft seats be destroyed by fire, the ball floats downstream, providing a tight metal-to-metal seal against the lip of the seat pocket. If the tailpiece seals are destroyed, the metal-to-metal tailpiece to body connection retards external leakage.

Locking devices are standard on all manually operated valves and permit locking in either the open or closed positions.

SPECIFICATIONS

See page 15 for technical specifications.

Sizes

1/4" - 3" full bore; 1/2" - 4" regular port

Working Pressures

To 5,000 psi in small sizes. Trim 43 extends pressure range to 3,000 psi in 1/4" F to 3 x 2" Threaded End Valves.

Operating Temperatures

From -50°F to +600°F (-46°C to +316°C).

End Connections

Class 150, 300, 600 flanged and threaded

Body Styles

2 Piece

Standard Materials

Body: Stainless steel and carbon steel

Ball/Stem: Stainless steel, carbon steel and monel

Seat/seal trims: TFE, filled TFE, Acetal Plastic, HPT-2, 316 stainless steel with chromium oxide, and fluoroelastomer

Industry standards Compliance: ANSI B16.5, B16.34, MSS.SP25, 72, API 607 4th edition, and others

Designed for critical applications where fugitive emissions cannot be tolerated.

The W-K-M 310D unibody ball valve is designed to meet tough industry requirements while maintaining the key features of the proven W-K-M floating ball valve design. It is offered in sizes from 1/2" to 4"x 3", class 150 and 300. Engineered for heavy duty, trouble free performance, the 310D ball valve is commonly selected for a number of applications in the following industries:

- Pulp and Paper
- Chemical and Petrochemical
- Refining
- Oil and Gas Production
- Terminals, Fuel Depots, and Storage Facilities

Features/Benefits

Adjustable replacement packing
Stem packing can be adjusted while the valve is in service.

Static grounding/body bleed port
The 310D ball valve can be supplied with a static grounding device. A body bleed port option is also available.

Locking capability is standard
To ensure safety, the valve can be locked in the open or closed position.

Positively retained stem
The stem is back-seated and positively retained to prevent stem blowout while the valve is in service.

310D fugitive emissions
The single piece unibody, stem design and extended stuffing box make the 310D ball valve excellent for services where emissions are a concern. The deep packing area is packed with a multiple chevron or jam packing to further minimize the possibility of emissions. These valves can

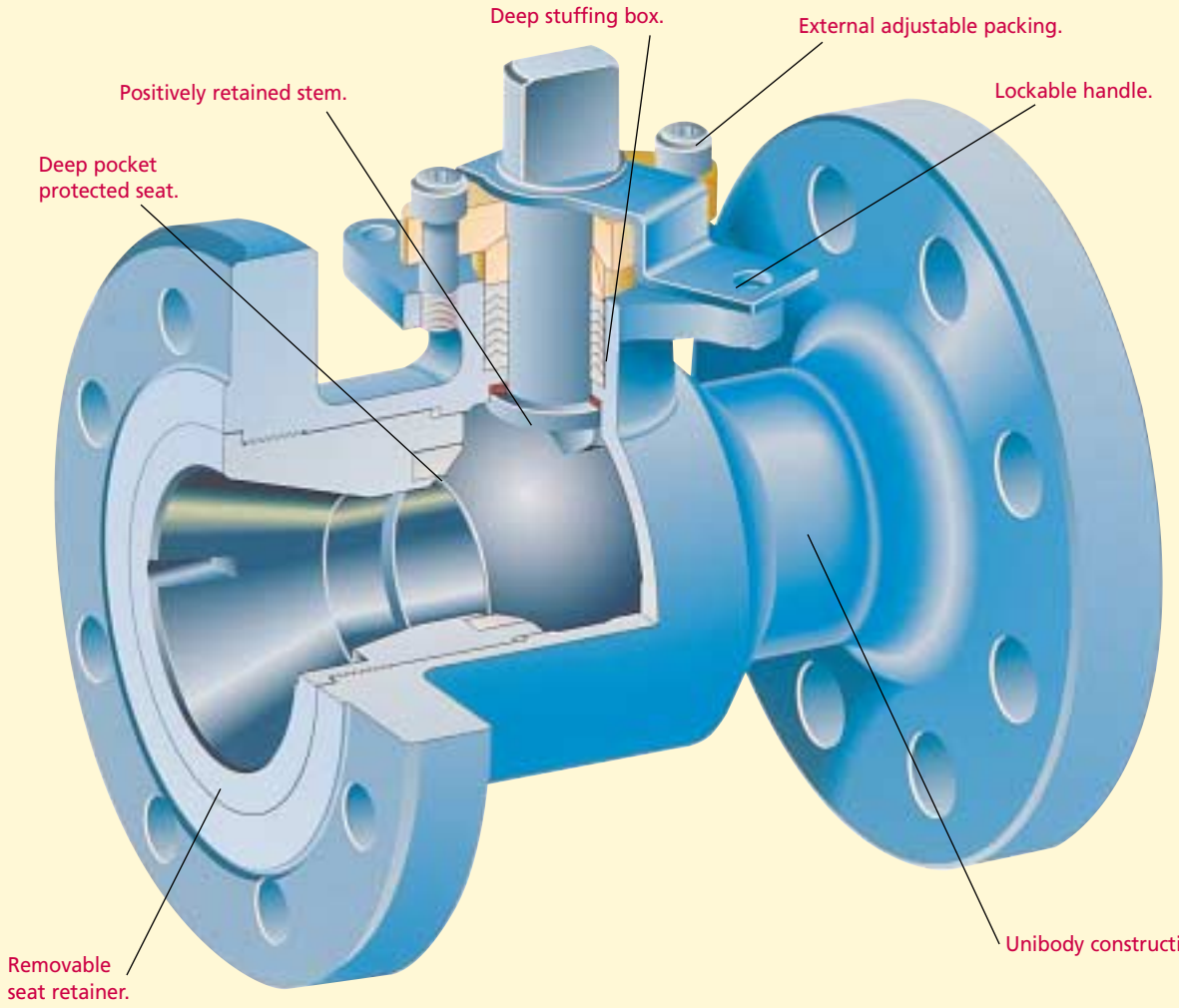

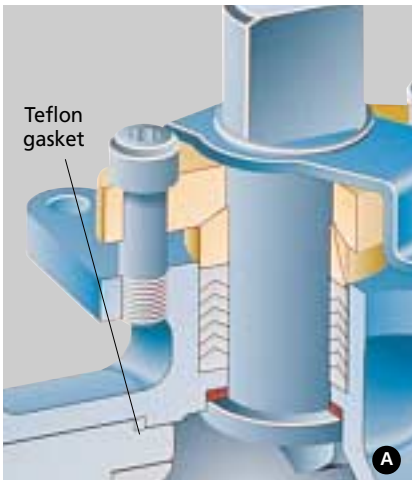

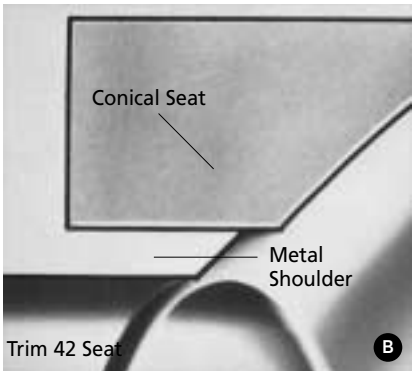

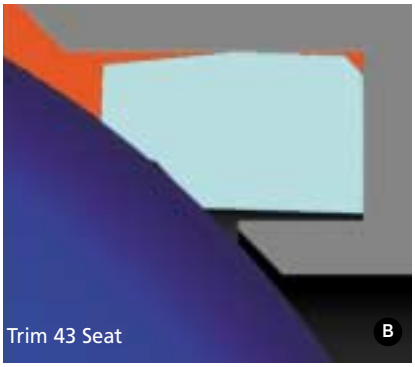

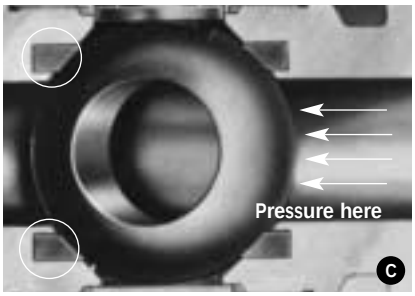

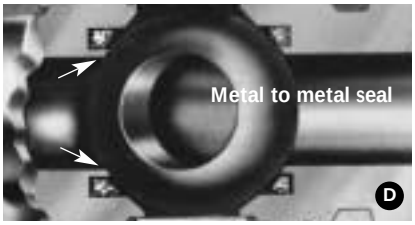

be certified to meet the requirements of fugitive emissions as regulated by The 1990 Amendment to the Clean Air Act.

Teflon seals

In the unibody design, a Teflon body joint gasket protects the body insert threads from corrosion by the flow medium. In the two piece valve design, a Teflon gasket ensures a tight seal between the body and tailpiece. There are no O-rings used in the WKM 310D design.

B ***Deep recessed seats***

The seat is recessed into a deep machined pocket, which serves to surround and protect the seat on all sides. This design eliminates cold flow into the valve conduit where it can be damaged by the action of the ball or the flow medium. The result is an extremely long service life. Trim 42 seat is filled TFE. Trim 43 seat is acetal plastic.

C ***Floating ball design delivers tight seal***

The ground and polished ball is free to float, and mates perfectly with the conical seats for a positive, leakproof seal. Self-cleaning and self-adjusting, the ball is also pressure-activated — the higher the line pressure, the tighter the seal.

Fire-tested for safety

All DynaSeal 310D valves are qualified under API standard 607. The pocketed seat and locked-in stem design contributes to its unusually good fire-tested characteristics. Should the soft seats be destroyed by fire, the ball floats downstream, providing a tight metal-to-metal seal against the lip of the seat pocket. If the tailpiece seals are destroyed, the metal-to-metal tailpiece body connection retards external leakage.

Indicator handle

The design of the handle permits installation on the stem in the correct position only—in alignment with the ball port. When the handle is aligned with the pipe, the valve is open. When the handle is perpendicular to the pipe, the valve is closed.

Maintenance-free performance

Under most conditions, the DynaSeal 310D floating ball valve will provide years of trouble-free service with no maintenance required. In some severe applications, such as handling extremely abrasive slurries at high temperatures, it may be necessary to replace the seats occasionally. Seat and seal kits are available and replacement can be done easily with ordinary tools.

Actuation-friendly

A variety of actuator types can be easily installed, including pneumatic, hydraulic, diaphragm, vane, electro-mechanical and electro-hydraulic. Cooper Cameron Valves can provide a total package of valves, actuators, and support services to meet your needs.

SPECIFICATIONS

See pages 19 and 26 for technical specifications.

Sizes
1/2" to 4"x 3"

Pressure Class
Class 150 and 300

Standard End Connection
Flanged, Raised Face

Standard Materials
Body: Carbon Steel, CF8M SS
Stem/ball: Carbon Steel, 316 SS
Seat: Reinforced TFE

Optional Materials
Bodies, stems, and balls can be offered in different alloys - consult factory.
Seat materials: High Temp TFE, Viton, Stellite, Chromium Oxide Coated, Acetal Plastic

Industry Standards Compliance
ANSI B16.5, B16.104; MSS-SP-6, 25, 55, 72; API 607 and others.

The W-K-M floating ball valve design expands further into the oilfield market with the DynaSeal 210A ball valve. This rugged, but economical ductile iron ball valve is the valve of choice for threaded end oilfield applications where carbon steel body material is not a requirement.

The W-K-M 210A ball valve is a two piece design with ductile iron body and tailpiece. Even though this valve is economical, it includes many of the premium design features found in the W-K-M carbon steel 310 and 310D ball valves. It is available in 1" to 4"x3" sizes. Working pressures offered are 1,000, 1,500 and 2,000 psi. Maximum pressure ratings are 2,000 psi for the 1" to 3"x2" valves and 1,500 psi for the 3"x3" and 4"x3" valves. This valve is primarily used in the Oilfield market, typically chosen for the following applications:

- Production wing valves on low pressure gas wells
- Production flow lines
- Production gathering systems for water, oil, and gas
- Gas blow down service
- Tank batteries for storage or production
- Frac water tanks

Features/Benefits

Locking capability is standard

The valve can be locked in the open or closed position.

Positively retained stem

The stem is positively retained. It is designed to prevent stem blowout while the valve is in service.

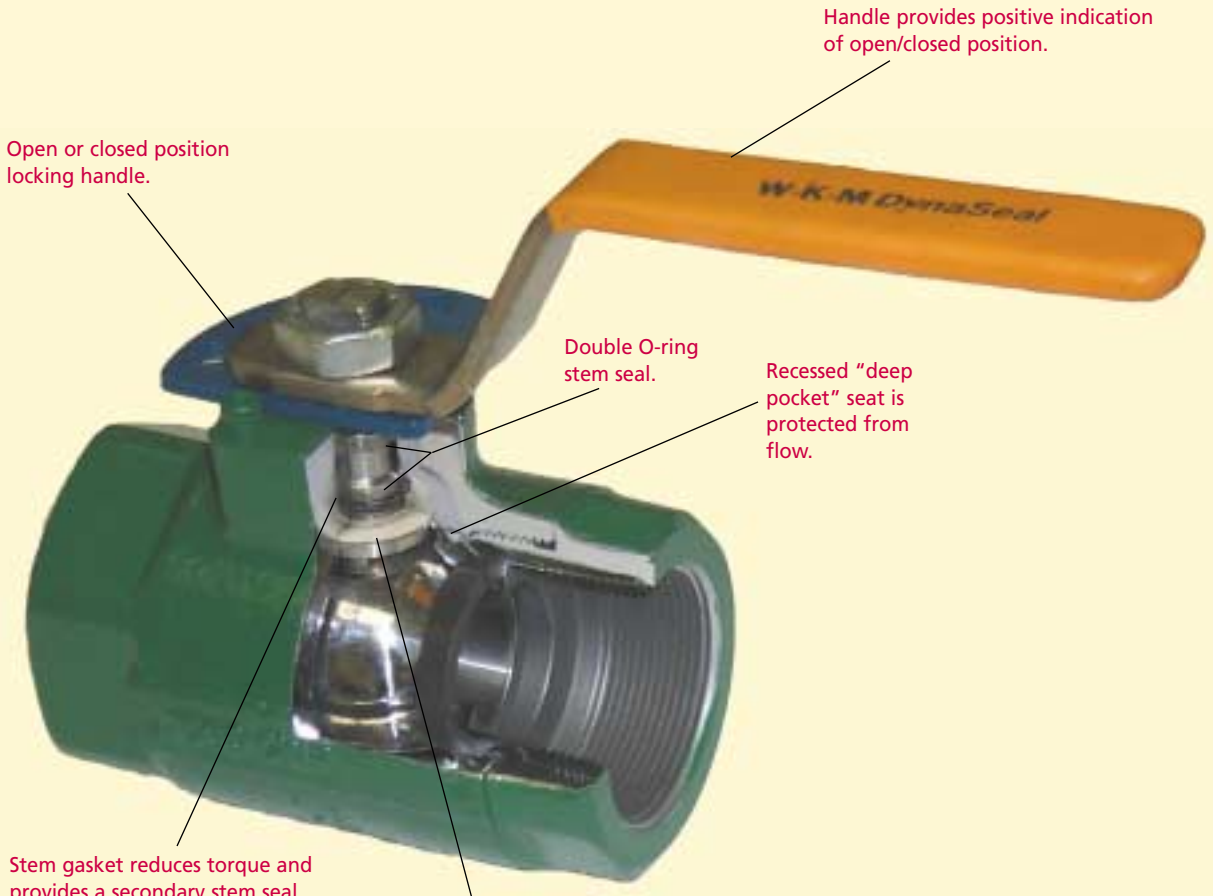



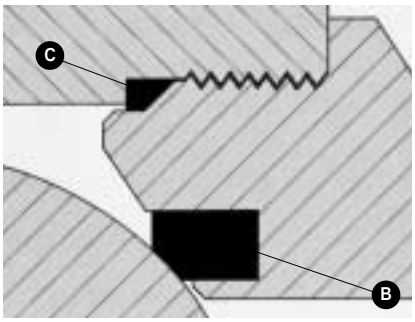

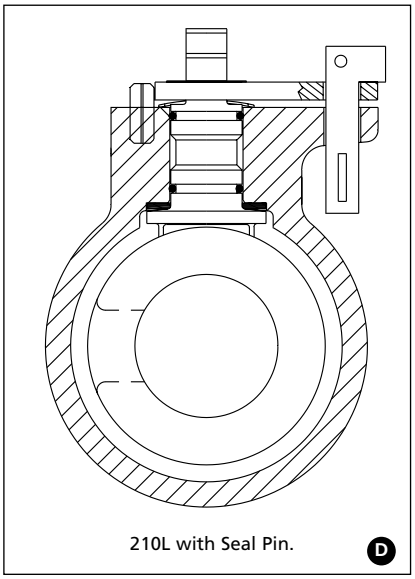

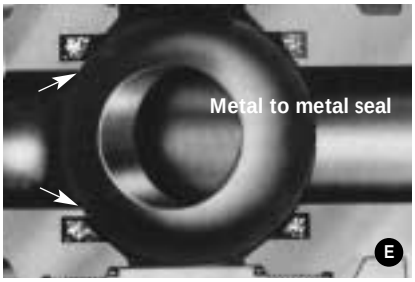

Color coded working pressures for safety

The lock plates are color coded so pressure ratings are quickly identified (1,000 psi - green, 1,500 psi - blue & 2,000 psi -red) .

A ***Superior stem journal design prevents stem seizure***

The stem is designed with two internal O-ring grooves located on either side of a shallow grease groove. The top O-ring is a weather seal while the bottom one seals the stem bore against the line media from the stem bore. The stem gasket provides a backup seal.

The shallow groove between the O-rings provides three benefits:

- prevents stem seizure
- reduces torque
- provides a space for permanent lubricating grease applied at the factory during assembly.

This stem design provides long, trouble free service without the need for additional grease, but for those customers wanting additional assurance, a grease fitting is offered as an option.

B ***Deep recessed seats***

The seat is recessed into a deep machined pocket which serves to surround and protect the seat on all sides. This design eliminates cold flow into the valve conduit where it can be damaged by the action of the ball or the flow medium. The result is extremely long service life.

C ***Teflon body seal***

A Teflon body seal is positioned between the line bore and tail piece threads isolating the threads from the line media.

D ***Seal pin device provided as standard on 1000 psi, 2", 3" and 4" reduced port valves (210L).***

A secondary seal pin device for applying tamper detection seals is provided on these three 1,000 psi valves. These valves (referred to as 210L) are a popular choice for production tank batteries where tamper detection seals are often required.

E ***Fire tested design***

The W-K-M DynaSeal 210A ball valves are qualified under API Standard 607. The pocketed seat, locked-in stem, and body/tailpiece designs give this valve excellent fire-tested characteristics.

SPECIFICATIONS

See page 30 for technical specifications.

Sizes

1" to 4"x 3"

Pressures

1000, 1,500 and 2,000 psi

Standard End Connection

API line pipe threads

Standard Materials

Body: Ductile Iron

Stem & ball: Carbon Steel

Seat/seals: Delrin/Buna-N

Optional Materials

Stem & ball: Stainless Steel

Seat/seals: Teflon / Viton

(Note: 210A valves trimmed with SS stem and ball, with Teflon seat and Viton seals meet NACE MR-01-75 requirements for H_2S service)

Industry Standards Compliance

ANSI B16.5 & B16.34; MSS-SP-6, 25, 55, 72 & 61; API 607.

Ball Valve Parts Detail

4" – 12" Full Bore

6" – 14" Regular Port

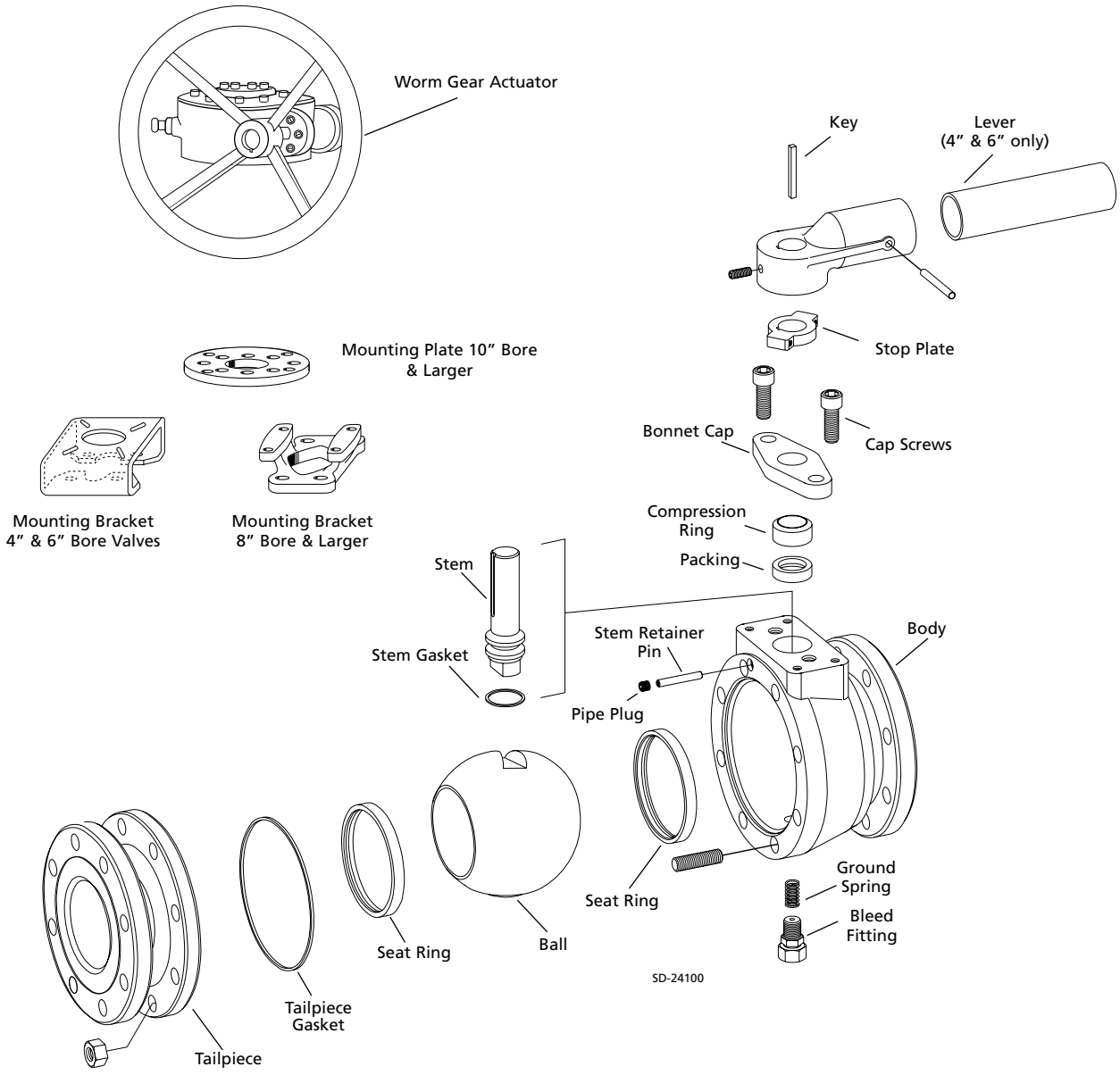

Standard Materials (4" Full Bore – 8" Regular Port)

Body-Tailpiece Material Codes

Part	CS	CS2*	S1	S8
Body	A216 Gr WCC		A351 Gr CF8M	
Studs	A193 Gr B7		A193 Gr B7 Plated	A193 Gr B8
Nuts	A194 Gr 2H		A194 Gr 2H Plated	A193 B8
Body Drain Fitting	Carbon Steel	Stainless Steel		
Tailpiece	A216 Gr WCC or ASTM A105		A351 Gr CF8M	
Packing Adjust Screw	Alloy Steel		Alloy Steel Plated	SS
Bonnet Cap	A216 Gr WCC Plated			A351 Gr CF8M

*CS2 and S8—to be used for H_2S service. Used with S1 internal trim only. Meets NACE MR-01-75.

Seat-Seal Material Codes

Part	01	01F	02	02F	14	14F	18	28	60	60A	92H
Seat	TFE		Filled TFE				Special Filled TFE	Filled TFE	316 S with Stellite hard facing		316 SS Chromium Oxide Coat
Seat Shim	—	TFE	—	TFE	—	TFE	—		—		
Seat Seal	—									Braided Graphite	Filled TFE
Tailpiece Gasket	TFE						Filled TFE				
Stem Gasket	TFE	Filled TFE									
Packing	Graphite / TFE with SS cap										

Ball-Stem Material Codes

Part	CS	S1	ML
Ball	ASTM A105 Hard Chrome Plate	316 SS	B164 Class B Ni-Cu Alloy
Ground Spring	304 SS		
Stem	Carbon Steel Plated	316 SS	B164 Class B Ni-Cu Alloy
Compression Ring	Carbon Steel ENP	304 SS	
Stem Retainer Pin	Carbon Steel	316 SS	
Stem Retainer Pipe Plug	Carbon Steel	316 SS	

Actuator Codes (Wrenches)

Part (Body)	Wrench—For All Body Material Codes
Wrench Head	Ductile Iron
Wrench Handle	Carbon Steel
Wrench Handle Pin	Carbon Steel
Cap Screw	Alloy Steel
Stop Plate	Carbon Steel

Actuator Codes

Part (Body)	Worm Gear—For All Body Material Codes
Mounting Bracket	Carbon Steel
Bolting	Carbon Steel
Set Screw	Carbon Steel
Stem Adapter	Carbon Steel
Actuator	As Selected
Handwheel	Carbon Steel

Standard Materials (8" Full Bore – 14" Regular Port)

Body-Tailpiece Material Codes

Part	CS	CS2*	S1	S8
Body	A216 Gr WCC		A351 Gr CF8M	
Studs	A193 Gr B7		A193 Gr B7 Plated	A194 Gr B8
Nuts	A194 Gr 2H		A194 Gr 2H Plated	A194 Gr B8
Body Drain Fitting	Carbon Steel	Stainless Steel		
Tailpiece	A216 Gr WCC		A351 Gr CF8M	
Packing Adjust Studs	A193 Gr B7		A193 Gr B7 Plated	A193 Gr B8
Packing Adjust Nuts	A194 Gr 2H		A194 Gr 2H Plated	A194 Gr B8
Bonnet Cap	A216 Gr WCC Plated			A351 Gr CF8M

*CS2 and S8—to be used for H_2S service. Used with S1 internal trim only. Meets NACE MR-01-75.

Seat-Seal Material Codes

Part	01	01F	02	02F	14	14F	18	28	60	60A	92H
Seat	TFE		Filled TFE				Special Filled TFE	Filled TFE	316 SS with Stellite hard facing		316 SS Chromium Oxide Coat
Seat Shim	—	TFE	—	TFE	—	TFE	—		—		
Seat Seal	—									Braided Graphite	Filled TFE
Tailpiece Gasket	TFE						Filled TFE				
Stem Gasket	TFE	Filled TFE									
Packing	Graphite / TFE with SS cap										

Ball-Stem Material Codes

Part	CS	S1	ML
Ball	ASTM A105 Hard Chrome Plate	316 SS	B164 Class B Ni-Cu Alloy
Ground Spring	304 SS		
Stem	Carbon Steel Plated	316 SS	B164 Class B Ni-Cu Alloy
Compression Ring	Carbon Steel Plated	304 SS	
Stem Retainer Pin	Carbon Steel	316 SS	
Stem Retainer Pipe Plug	Carbon Steel	316 SS	

Actuator Codes

Part (Body)	For All Body-Tailpiece Trim Codes
Mounting Bracket	Ductile Iron
Adapter Plate	Carbon Steel
Stem Adapter	Carbon Steel
Bolting	Alloy Steel
Key	Carbon Steel
Set Screw	Carbon Steel
Actuator	As Selected
Handwheel	Carbon Steel

Dimensional Data (4"-12" Full Bore)

B110-Long Pattern — 150 Raised Face Flanges
B113-Short Pattern — 150 Raised Face Flanges
B128-Long Pattern — 300 Raised Face Flanges
B134-Short Pattern — 300 Raised Face Flanges
B150 – 300 Butt Weld

Full Bore—Lever Actuated

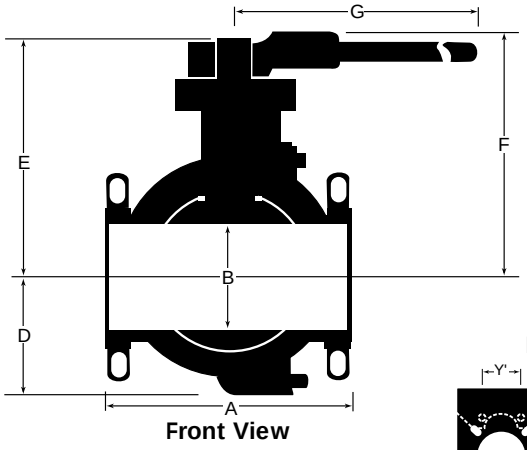

Front View

M= Stem Diameter
R= Key

Full Bore—Worm Gear Actuated

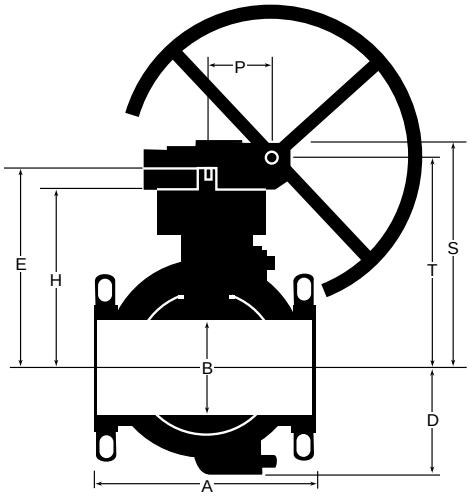

Front View

Mounting Brackets

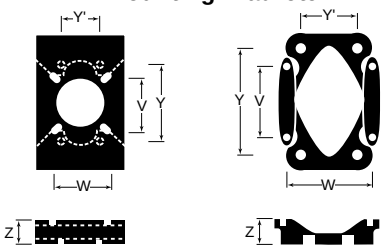

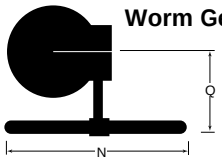

Worm Gear Actuator

Note: Flange holes are tapped:
6" 150 Short pattern, both ends, 3/4"–10 NC
6" 150 Long pattern, body end only, 3/4"–10 NC
10" 300 Short pattern, both ends, 1"–8 NC

Dimensional Data (in)

Size	Dimension A*					Approximate dimensions in inches																		
	150 RF		300 RF		BW†																			
	Long	Short	Long	Short																				
	B110	B113	B128	B134	B150	B	D	E	F	G	H	M	N	P	Q	R	S	T	W	V	X	Y	Y′	Z
4	9.00	—	12.00	—	12.00	4.00	4.62	8.62	9.9	36	7.56	1.25	20	4	13	.25	12	10	3.5		.56	4.62	1.88	2.44
6	15.50	10.50	15.88	—	15.88	6.00	6.38	11.38	12.62	48	9.44	1.5	20	4	13	.38	14	12	3.5		.56	4.62	1.88	2.44
8	18.00	—	19.75	16.50	16.50	8.00	8.12	16.38	—		12.25	2.38	20	6	15	.62	20	17	7.75	5.75	.69	8.25	3.5	3
10	21.00	—	22.38	18.00	22.00	10.00	9.81	18.5	—		15.12	2.94	20	6	15	.75	23	20	7.75	5.75	.69	8.25	3.5	3
12	24.00	—				12.00		20.12	—		16.38	2.94	20	6	15	.75	24	21	7.75	5.75	.69	8.25	3.5	3
	—		25.50	—	25.00	12.00		20.12	—		16.38	2.94	20	11	19	.75	26	24	7.75	5.75	.69	8.25	3.5	3

*Centerline-to-face dimension is half of Dimension A except:
4" Flg. 150 Full Bore – Stem is offset 1/2" toward body end.
6" Flg. 150 Full Bore Long Pattern – Stem is offset 2 1/2" toward body end.

†Butt Weld.

Dimensional Data (mm)

Size	Dimension A*					Approximate dimensions in millimeters																		
	150RF		300RF		BW†																			
	Long	Short	Long	Short																				
	B110	B113	B128	B134	B150	B	D	E	F	G	H	M	N	P	Q	R	S	T	W	V	X	Y	Y′	Z
100	229	—	305	—	305	102	117	219	251	915	192	32	508	65	289	6	270	224	89		14	119	48	62
150	394	267	403	—	403	152	162	289	321	915	240	38	508	79	289	10	329	279	89		14	119	48	62
200	457	—	502	419	419	203	206	416	—		318	60	508	117	340	16	471	381	197	146	17	209	89	76
250	533	—	568	457	559	254	249	470	—		384	75	508	117	340	19	530	448	197	146	17	209	89	76
300	610	—				305	356	511	—		416	75	508	117	340	19	567	479	197	146	17	209	89	76
	—		648	—	635	305	356	511	—		416	75	508	252	352	19	648	557	197	146	17	209	89	76

*Centerline-to-face dimension is half of Dimension A except:
4" Flg. 150 Full Bore – Stem is offset 1/2" toward body end.
6" Flg. 150 Full Bore Long Pattern – Stem is offset 2 1/2" toward body end.

†Butt Weld.

Dimensional Data (6"- 14" Regular Port)

B100–Long Pattern — 150 Raised Face Flanges
B102–Short Pattern — 150 Raised Face Flanges
B122–Short Pattern— 300 Raised Face Flanges
B120–Long Pattern — 300 Raised Face Flanges
B142–300 Butt Weld

Regular Port — Lever Actuated

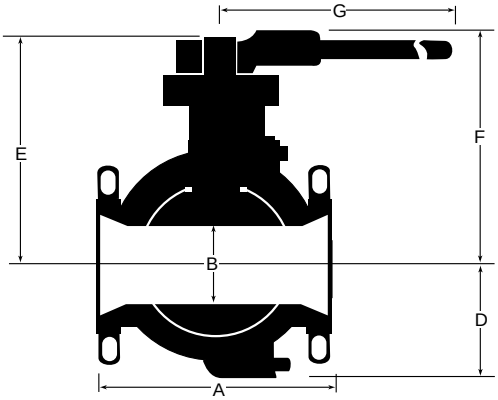

Front View

M= Stem Diameter
R= Key

Regular Port — Worm Gear Actuated

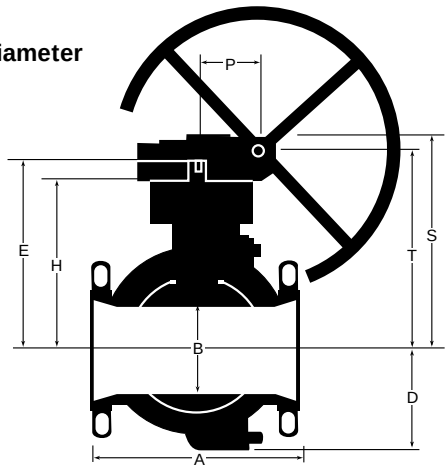

Front View

Note: Flange holes are tapped:
3/4"–10 NC on:
8" 150 Short pattern, tailpiece end only

Mounting Brackets

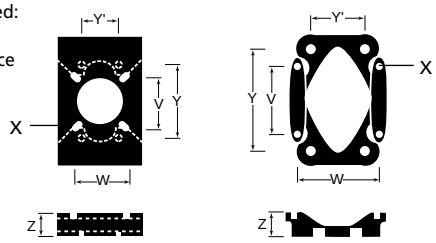

Worm Gear Actuator

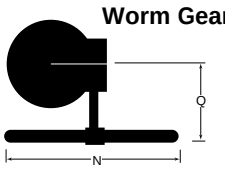

Dimensional Data (in)

Size	Dimension A*					Approximate dimensions in inches																			
	150 RF		300 RF		BW†																				
	Long	Short	Long	Short		B	C	D	E	F	G	H	M	N	P	Q	R	S	T	W	V	X	Y	Y′	Z
	B100	B102	B120	B122	B142																				
6	—	10.50	15.88	—	15.88	4.00	6.00	4.62	8.62	9.9	36	7.56	1.25	20	4	13	.25	12	10	3.5		.56	4.62	1.88	2.44
8	18.00	11.50	—	16.50	16.50	6.00	8.00	6.38	11.38	12.62	48	9.44	1.5	20	4	13	.38	14	12	3.5		.56	4.62	1.88	2.44
10	21.00	—	22.38	—	22.00	8.00	10.00	8.12	16.38	—		12.5	2.38	20	6	15	.62	20	17	7.75	5.75	.69	8.25	3.5	3
12	24.00	—	25.50	—	25.00	10.00	12.00	9.81	18.5	—		15.12	2.94	20	6	15	.75	23	20	7.75	5.75	.69	8.25	3.5	3
14	27.00	—				12.00	14.00	12	20.12	—		16.38	2.94	20	6	15	.75	24	21	7.75	5.75	.69	8.25	3.5	3
	—		30.00	—	30.00	12.00	14.00	12	20.12	—		16.38	2.94	20	11	19	.75	26	24	7.75	5.75	.69	8.25	3.5	3

*Centerline-to-face dimension is half of Dimension A. †Butt Weld.

Dimensional Data (mm)

Size	Dimension A*					Approximate dimensions in millimeters																			
	150 RF		300 RF		BW†																				
	Long	Short	Long	Short		B	C	D	E	F	G	H	M	N	P	Q	R	S	T	W	V	X	Y	Y′	Z
	B100	B102	B120	B122	B142																				
150	—	267	403	—	403	102	152	117	219	915	192	32	32	508	65	289	6	270	224	89		14	119	48	62
200	457	292	—	419		152	203	162	289	321	915	240	38	508	79	289	10	329	279	89		14	119	48	62
250	533	—	568	—	559	203	254	206	416	—		318	60	508	117	340	16	471	381	197	146	17	209	89	76
300	610	—	648	—	635	254	305	249	470	—		384	75	508	117	340	19	530	448	197	146	17	209	89	76
350	686	—				305	356	305	511	—		416	75	508	117	340	19	567	479	197	146	17	209	89	76
	—		762	—	762	305	356	305	511	—		416	75	508	252	352	19	648	557	197	146	17	209	89	76

*Centerline-to-face dimension is half of Dimension A. †Butt Weld.

For All 2-Piece

Weights (lbs-kg)

Valve Size (in)	Valve Size (mm)	End Connection	Full Bore Weight (lbs)	Full Bore Weight (kg)	Regular Port Weight (lbs)	Regular Port Weight (kg)
4 WGA	100 WGA	150 (L) Flg 300 (L) Flg BW	113 144 94	51 65 43	—	
6	150	150 (L) Flg 150 (S) Flg 300 (L) Flg BW	162 144 273 189	73 65 124 86	— 125 193 139	— 57 88 63
6 WGA	150 WGA	150 (L) Flg 150 (S) Flg 300 (L) Flg BW	176 158 239 203	80 72 108 92	— 133 190 154	— 60 86 70
8	200	150 (L) Flg 150 (S) Flg 300 (S) Flg BW	388 — 437 328	176 — 198 149	217 197 293 237	98 89 133 108
8 WGA	200 WGA	150 (L) Flg 150 (S) Flg 300 (L) Flg BW	428 — 477 368	194 — 216 167	231 211 307 251	105 96 139 114
10 WGA	250 WGA	150 (L) Flg 300 (L) Flg BW	695 858 610	315 389 277	451 587 365	205 266 166
12 WGA	300 WGA	150 (L) Flg 300 (L) Flg BW	943 1262 815	428 572 370	791 971 740	359 440 336
14 WGA	350 WGA	150 (L) Flg 300 (L) Flg BW	—		985 1350 1022	447 612 464

Flow Characteristics (C_V)*

Valve Size and Port Size (in)	Valve Pressure Class		
	BWE	150	300
4 × 4	2118	2446	2118
6 × 4	390	391 (S)	390
6 × 6	5403	6644 (S) 5468 (L)	5403
8 × 6	1215	1219 (S) 1215 (L)	1215 (S)
8 × 8	11261	10782	11261 (S) 10293 (L)
10 × 8	2671	2672	2670
10 × 10	17037	17438	18835 (S) 16894 (L)
12 × 10	4881	4885	4879
12 × 12	26163	26702	25905
14 × 12	10580	10076	10580

*Flow of water in U.S. Gallons per minute per 1 psi pressure drop across a fully open valve.
(S) Short Pattern.
(L) Long Pattern.

Stem Torques (in-lbs)
Seat Seal Codes 01, 01F, 14, 14F

Valve Bore Size (in)	Differential Pressure (psi)		
	0 –275	500	740
4	2090	3300	4200
6	4400	8200	11200
8	9000	14000	20300
10	15000	22000	30500
12	29300	37400	46400

Stem Torques (in-lbs)**
Seat Seal Codes 02, 02F, 18, 28

Valve Bore Size (in)	Differential Pressure (psi)		
	0 –275	500	740
4	2400	3300	4200
6	5400	8200	11200
8	10000	15000	20300
10	16000	23000	30500
12	32000	39000	46500

**Multiply trim 02 torque x 2 for seat seal codes 60, 60A, 92H.

Note: The torque values listed for 275 psi and greater are based on valves controlling the flow of clean lubricating liquid at ambient temperature. For valves at pressure less than 275 psi use the value for 275 psi. Interpolation may be used for any pressure above 275 psi but less than maximum pressure listed. Running torque values will average two-thirds of these values. For running torque values less than breakaway torque values at 275 psi use breakaway torque values. Reseating torque is equal to breakaway torque. For operating temperatures between –20°F to –50°F multiply these values by 1.20. These torque values do not contain service or safety factors. Actuator selection should be made based on experience and appropriate service and safety factors.

Standard Materials (1/4" Full Bore — 4" Regular Port)

Body-Tailpiece Material Codes

Part	CS	CS2*	CS3*	S1	S8*
Body	ASTM A105/A216 Gr. WCC		ASTM A350 LF2	316 SS/A351 CF8M	
Body Plug**	CS			SS	
Tailpiece	ASTM A105/A216 Gr. WCC		ASTM A350 LF2	316 SS/A351 CF8M	
Nameplate	SS				
Bonnet Cap	CS			SS	
Packing Adjusting Screws	Alloy Steel Plated	18-8 SS		Alloy Steel Plated	18-8 SS

*CS2/CS3/S8: to be used for H_2S service with S2 internal trim only. Meets NACE MR-01-75.
**When body drain is specified.

Seat-Seal Material Codes

Part	01	23**	42	43	48***	07	18	60A*	92H*
Seat	TFE	Celcon	Filled TFE	Acetal Plastic	Acetal Plastic	Viton	Special Filled TFE	Stellite	316 SS Chromium Oxide Coated
Tailpiece Gasket	TFE				Filled TFE	TFE	Filled TFE		
Stem Seal	TFE	Filled TFE							
Packing	Graphite/TFE w/SS Cap								

*1"F and larger
**1"R and smaller
***Weld end valves only

Ball-Stem Material Codes

Part	CS	S1	S2*	ML
Ball	AISI 1213 CS Chrome Plate	316 SS	316 SS	B 164 Class B Ni-Cu Alloy
Stem	17-4 PH	316 SS	17-4 PH	B 164 Class B Ni-Cu Alloy
Compression Ring	SS			

Note: *S2 Trim (17-4PH Stem and 316 SS Ball) is required for H2S service per NACE MR-01-75 to be used with Body/Tailpiece codes CS2/CS3/S8.

Actuator Codes

Part (Body)	CS, CS2, CS3, S1	S8
Lock Nut*	Alloy Steel	SS
Handle*	CS Zinc Plated	SS
HandleGrip*	Vinyl	
Wrench Handle**	Ductile Iron	
Wrench Head Bolt and Nut**	Alloy Steel	
Stop Plate	Stainless Steel	

*2"R and smaller
**2"F and larger

Dimensional Data (1/4" Full Bore – 4"Regular Port)

B138 – Threaded
B100 – 150 Raised Face Flanges
B120 – 300 Raised Face Flanges
B114 – 600 Raised Face Flanges
B170 – 600 Ring Joint Flanges

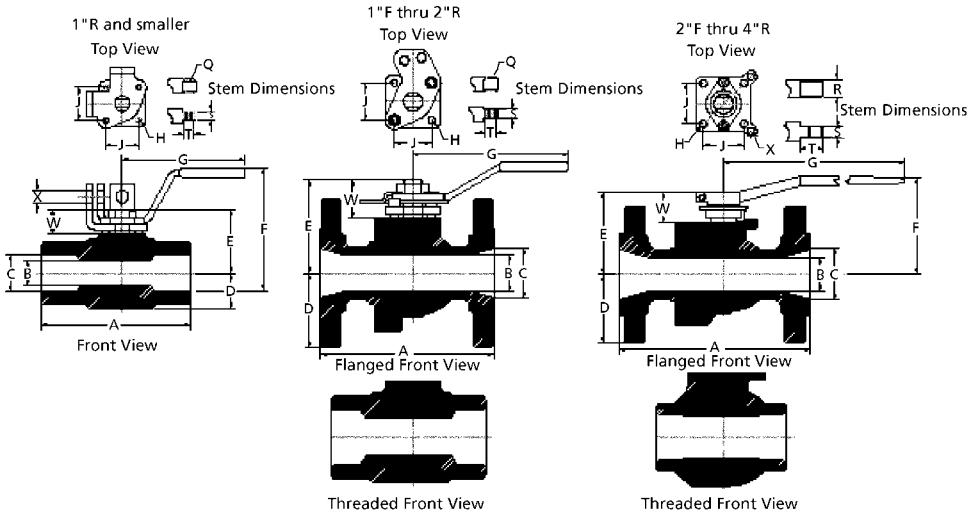

Dimensional Data (1/4"F – 4"R) – in

Size	THD	150	300	600	600RJ	B	C	THD	150	300	600	E	F	G	H*	Q*	R	S	T	J	W	X
	A							D														
1/4"F	3.00	—	—	—	—	.25	—	.69	—	—	—	1.4	2.8	4.3	#8-32	5/16-24	—	.18	.25	.88	.55	.38
3/8"F	3.25	—	—	—	—	.38	—	.69	—	—	—	1.4	2.8	4.3	#8-32	5/16-24	—	.18	.25	.88	.55	.38
1/2"R	3.75	—	—	—	—	.38	.50	.69	—	—	—	1.4	2.8	4.3	#8-32	5/16-24	—	.18	.25	.88	.55	.38
1/2"F	4.00	—	—	—	—	.50	—	.81	—	—	—	1.8	3.5	5.4	#10-24	7/16-20	—	.26	.34	1.00	.72	.38
3/4"F	4.28	—	—	—	—	.75	—	1.00	—	—	—	1.9	3.5	5.4	#10-24	7/16-20	—	.26	.34	1.00	.72	.38
1"R	4.50	—	—	—	—	.75	1.00	1.00	—	—	—	1.9	3.5	5.4	#10-24	7/16-20	—	.26	.34	1.00	.72	.38
1"F	4.50	5.00	6.50	8.50	8.50	1.00	—	1.32	2.12	2.44	2.44	2.8	4.1	7.0	1/4-20	5/8-18	—	.36	.63	1.25	1.25	.38
1 1/2"F	5.25	6.50	7.50	9.50	9.50	1.50	—	1.81	2.50	3.06	3.06	3.7	5.0	9.5	5/16-18	3/4-16	—	.45	.81	1.50	1.50	.38
2"R	6.25	7.00	8.50	11.50	11.50	1.50	2.00	1.81	3.00	3.25	3.25	3.7	5.0	9.5	5/16-18	3/4-16	—	.45	.81	1.50	1.50	.38
2"F	6.25	7.00	8.50	11.50	11.50	2.00	—	2.38	3.00	3.25	3.25	5.0	5.4	15.0	1/2-13	—	1.12	.69	1.37	2.44	1.88	.38
3x2"	9.00	8.00	11.12	14.00	14.12	2.00	3.00	2.38	3.75	4.12	4.12	5.0	5.4	15.0	1/2-13	—	1.12	.69	1.37	2.44	1.88	.38
3"F	10.00	8.00	11.12	14.00	14.12	3.00	—	3.28	3.75	4.12	4.12	6.4	6.6	15.0	1/2-13	—	1.12	.74	1.75	3.00	2.31	.38
4"R	12.00	9.00	12.00	17.00	17.12	3.00	4.00	3.28	4.50	5.00	5.38	6.4	6.6	15.0	1/2-13	—	1.12	.74	1.75	3.00	2.31	.38

*American National Thread in inches.

Dimensional Data (1/4"F – 4"R) – mm

Size	THD	150	300	600	600RJ	B	C	THD	150	300	600	E	F	G	H*	Q*	R	S	T	J	W	X
	A							D														
6F	76	—	—	—	—	10	—	18	—	—	—	35	70	108	#8-32	5/16-24	—	5	6	22	14	10
10F	83	—	—	—	—	10	—	18	—	—	—	35	70	108	#8-32	5/16-24	—	5	6	22	14	10
15R	95	—	—	—	—	10	13	18	—	—	—	35	70	108	#8-32	5/16-24	—	5	6	22	14	10
15F	102	—	—	—	—	13	—	20	—	—	—	45	89	137	#10-24	7/16-20	—	7	9	25	18	10
20F	108	—	—	—	—	19	—	25	—	—	—	48	89	137	#10-24	7/16-20	—	7	9	25	18	10
25R	114	—	—	—	—	19	25	25	—	—	—	48	89	137	#10-24	7/16-20	—	7	9	25	18	10
25F	114	127	165	216	216	25	—	34	54	62	62	71	104	178	1/4-20	5/8-18	—	9	16	32	31	10
40F	133	165	190	241	241	38	—	46	64	78	78	94	127	241	5/16-18	3/4-16	—	11	21	38	38	10
50R	159	178	216	292	292	38	51	46	76	83	83	94	127	241	5/16-18	3/4-16	—	11	21	38	38	10
50F	159	178	216	292	292	51	—	60	76	83	83	127	137	381	1/2-13	—	28	18	35	62	48	10
80x50	229	203	283	356	359	51	76	60	95	105	105	127	137	381	1/2-13	—	28	18	35	62	48	10
80F	254	203	283	356	359	76	—	83	95	105	105	163	168	381	1/2-13	—	28	19	44	76	59	10
100R	305	229	305	432	435	76	102	83	114	127	137	164	168	381	1/2-13	—	28	19	44	76	59	10

*American National Thread in inches.

1/4"– 4"R Weight lbs (kg)

Valve Size – in (mm)	End Connection	Full Bore	Regular Port
		Weight	
1/4" (6)	THD	1.5 (.68)	—
3/8" (10)	THD	1.5 (.68)	—
1/2" (15)	THD	1.5 (.68)	1.5 (.68)
3/4" (20)	THD	3.25 (1.47)	—
1" (25)	THD 150 (20PN) Flg 300 (50PN) Flg 600 (100PN) Flg	5.0 (2.27) 8.5 (3.86) 12.0 (5.44) 16.0 (7.26)	3.0 (1.36) — — —
1 1/2" (40)	THD 150 (20PN) Flg 300 (50PN) Flg 600 (100PN) Flg	12.0 (5.44) 17.0 (7.71) 24.0 (10.9) 32.0 (14.5)	— — — —
2" (50)	THD 150 (20PN) Flg 300 (50PN) Flg 600 (100PN) Flg	23.0 (10.4) 33.0 (15.0) 38.0 (17.2) 47.0 (21.3)	12.5 (5.67) 23.0 (10.4) 25.0 (11.3) 33.0 (15.0)
3" (80)	THD 150 (20PN) Flg 300 (50PN) Flg 600 (100PN) Flg	56.0 (25.4) 64.0 (29.0) 81.0 (36.7) 87.0 (39.5)	36.0 (16.3) 51.0 (23.1) 76.0 (35.0) 81.0 (36.7)
4" (100)	THD 150 (20PN) Flg 300 (50PN) Flg 600 (100PN) Flg	— — — —	67.0 (30.4) 80.0 (36.3) 127.0 (57.6) 130.0 (59.0)

Flow Characteristics (Cv)*

Valve Size and Port Size (in)	Threaded End Valve	Valve Pressure Class		
		150	300	600
1/4 × 1/4	9	—	—	—
3/8 × 3/8	9	—	—	—
1/2 × 3/8	5	—	—	—
1/2 × 1/2	16	—	—	—
3/4 × 3/4	45	—	—	—
1 × 3/4	20	—	—	—
1 × 1	93	88	77	68
1 1/2 × 1 1/2	248	223	208	184
2 × 1 1/2	80	102	101	99
2 × 2	491	464	421	362
3 × 2	104	117	133	133
3 × 3	1099	1228	1042	928
4 × 3	322	359	410	406

*Flow of water in U.S. gallons per minute per 1psi pressure drop across a fully open valve.

Stem Torques (in-lbs)
Seat Seal Codes 01

Valve Bore Size (in)	Differential Pressure				
	0–275	500	740	1000	1500
1/4" – 3/8"	36	36	36	36	42
1/2"	60	60	60	72	72
3/4"	90	90	90	120	180
1"	120	150	180	225	—
1 1/2"	240	330	420	520	—
2"	500	640	810	—	—
3"	1200	1800	2400	—	—

Stem Torques (in-lbs)
Seat Seal Codes 42

Valve Bore Size (in)	Differential Pressure				
	0–275	500	740	1000	1500
1/4" – 3/8"	36	36	36	36	42
1/2"	60	60	60	72	72
3/4"	90	90	90	120	180
1"	120	150	180	225	300
1 1/2"	240	330	420	520	720
2"	500	640	810	1090	1440
3"	1200	1800	2400	—	—

Stem Torques (in-lbs)
Seat Seal Codes 43, 48

Valve Bore Size (in)	Differential Pressure								
	0–275	500	740	1000	1500	2000	2250	2500	3000
1/4" – 3/8"	48	48	48	50	55	60	70	85	100
1/2"	58	60	64	70	90	120	140	165	215
3/4"	90	95	105	125	175	230	260	295	370
1"	225	245	260	280	320	400	455	520	700
1 1/2"	390	410	450	510	700	920	1050	1200	1550
2"	860	960	1075	1210	1500	1830	2000	2200	2600
3"	1450	1635	1885	2220	3050	—	—	—	—

Stem Torques (in-lbs)
Seat Seal Codes 18

Valve Bore Size (in)	Differential Pressure					
	0–275	500	740	1000	1500	2250
1/4" – 3/8"	60	60	60	60	72	84
1/2"	60	60	60	70	84	108
3/4"	128	128	145	160	215	360
1"	274	284	312	360	405	580
1 1/2"	520	580	680	810	980	1390
2"	910	1042	1240	1500	1765	2300
3"	1200	1800	2400	2900	3420	—

Stem Torques (in-lbs)
Seat Seal Codes 07

Valve Bore Size (in)	Liquid 0–275 psi	Dry Gas 0–275 psi	Dry Gas 740 psi
1/4"–3/8"	36	42	113
1/2"	60	82	220
3/4"	90	150	404
1"	180	336	606
1 1/2"	420	840	2260
2"	900	1200	3230
3"	2400	3600	9690

Stem Torques (in-lbs)
Seat Seal Codes 23

Valve Bore Size (in)	Differential Pressure													
	0–275	500	740	1000	1500	2000	2250	2500	3000	3500	3750	4000	4500	5000
1/4" – 3/8"	60	60	60	60	60	65	70	85	100	115	125	130	150	165
1/2"	70	70	70	82	110	125	140	180	220	276	310	—	—	—
3/4"	108	108	125	140	190	260	340	420	560	695	800	—	—	—

Multiply trim 42 torque x 2 for seat seal codes 60, 60A, 92H.

Note: The torque valves listed for 275 psi and greater are based on valves controlling the flow of clean lubricating liquid at ambient temperature. For valves at pressure less than 275 psi use the value for 275 psi. Interpolation may be used for any pressure above 275 psi but less than maximum pressure listed. Running torque values will average two-thirds of these values. For running torque values less than breakaway torque values at 275 psi use breakaway torque values. Reseating torque is equal to breakaway torque. For operating temperatures between -20˚F to -50˚F multiply these values by 1.20. These torque values do not contain service or safety factors. Actuator selection should be made based on experience and appropriate service and safety factors.

Standards and Specifications

DynaSeal 310 ball valves comply with the following design and testing standards: ANSI B16.5 (Steel Pipe Flanges and Flange Fittings), MSS-SP-6 (Standard Finishes for Pipe Flanges), MSS-SP-25 (Standard Marking System for Valves), MSS-SP-55 (Quality Standard for Steel Castings), API 607 (Fire Test Specification.

In addition, DynaSeal 310 ball valves can be supplied to comply with these standards: MSS-SP-72 (ball valves for General Service), ANSI B31.1 (Power Piping), ANSI B31.3 (Chemical Plant and Petroleum Refinery Piping), API 598 (Valve Inspection and Testing), MSS-SP-61 (Pressure Testing of Steel Valves), ANSI B16.104 (Valve Seat Leakage)

DynaSeal 310 ball valves can be trimmed for sour gas service in accordance with NACE MR-01-75 (latest issue) and are available in both carbon steel and stainless steel.

How to Order

2	R	B	1	3	6	C	S	4	3	S	2	W	R
Size Inches	Port Reg=R Full=F	Valve Type				Body Tailpiece Code		Seal Code		Ball-Stem Code		Actuator Code	

See Next Page

Material	Codes
Carbon Steel	CS
Controlled hardness carbon steel for H_2S service	CS2*
Same as CS2, but special for -50°F service	CS3*
316 stainless steel for wetted parts	S1
316 stainless steel with stainless steel external trim. Good for -50°F.	S8†

*Meets NACE specification MR-01-75.
†Meets NACE specification MR-01-75 in 3" bore size and smaller.

Material	Code
Carbon Steel	CS
316 Stainless Steel	S1
Ni-Cu Alloy	ML
17-4PH	S2*

*NACE 4"R and smaller. 17-4 PH Stem, 316 Stainless Steel Ball

Actuator Code	
Wrench	WR
Oval Handwheel	OH
Worm Gear	WGA
Bare Stem	BS
Less Gear	LG
Less Wrench	LW

Seal Code	Seal Material	Tailpiece Gasket Material
01	TFE	TFE
01F	TFE	TFE
02/42	Filled TFE	TFE
02F	Filled TFE	TFE
43	Homopolymer Acetal Plastic	TFE
07	Viton™	TFE
14	Filled TFE	TFE
14F	Filled TFE	TFE
18	HPT-2	Filled TFE
23	Celcon™	TFE
60	Stellite™	Filled TFE
60A	Stellite™	Filled TFE
92H	316SS with chrome oxide and Filled TFE	Filled TFE

310 2-Piece Valve Types

Size (in)	150RF		300RF		Butt Weld 300BW	600RF	600RJ
	LP	SP	LP	SP			
1 F	B110	—	B128	—	—	B182	B172
1 1/2 F	B110	—	B128	—	—	B182	B172
2 R	B100	—	B120	—	—	B114	B170
2 F	B110	—	B128	—	—	B182	B172
3 x 2	B100	—	B120	—	—	B114	B170
3 F	B110	—	B128	—	—	B182	B172
4 R	B100	—	B120	—	—	B114	B170
4 F	B110	—	B128	—	B150	—	—
6 R	—	B102	B120	—	B142	—	—
6 F	B110	B113	B128	—	B150	—	—
8 R	B100	B102	—	B122	B142	—	—
8 F	B110	—	B128	B134	B150	—	—
10 R	B100	—	B120	—	B142	—	—
10 F	B110	—	B128	B134	B150	—	—
12 R	B100	—	B120	—	B142	—	—
12 F	B110	—	B128	—	B150	—	—
14 R	B100	—	B120	—	B142	—	—

310D Unibody Valve Types

Size (in)	150RF	300RF
1/2 F	B112	B130
3/4 R	B102	B122
1 R	B102	B122
1 F	B112	B130
1 1/2 R	B102	B122
2 R	B102	B122
3 R	B102	B122
4 R	B102	B122

Note: R - Regular Port, F - Full Port, SP - Short Pattern, LP - Long Pattern

310 2-Piece Valve Types

Size (in)	Female Thread
1/4 F	B138
3/8 F	B138
1/2 R	B136
1/2 F	B138
3/4 R	B136
3/4 F	B138
1 R	B136
1 F	B138
1 1/2 F	B138
2 R	B136
2 F	B138
3 F	B138
4 R	B136

310 3-Piece Valve Types

Size (in)	Male Thread	Socket Weld
1/4 F	B138	B103
3/8 F	–	–
1/2 R	B136	B106
1/2 F	–	–
3/4 R	–	–
3/4 F	B138	B103
1 R	B136	B106
1 F	–	–
1 1/2 F	–	B103
2 R	–	B106
2 F	–	–
3 F	–	–
4 R	–	–

Note: Threaded end valves have NPT internal pipe threads in full conformance with ANSI B2.1 and Federal Thread Handbook H-28.

Trim Guidelines for all 310 Series Valves

The chart below is an abbreviated guide to the chemical resistance and pressure-temperature limitations of the seal materials used in DynaSeal 310 ball valves. When in doubt about the trim selection consult your DynaSeal distributor or the factory.

Seal Code	Seat Material	Tailpiece Gasket	Service Application
01	TFE	TFE	Seat and tailpiece gaskets are of virgin TFE. Use where lading contamination from glass or other fillers is not desirable, such as in food service. Recommended for low temperature service to -50°F. Also recommended for vacuum service.
01F	TFE	TFE	Fire tested trim for 2-piece design valves. Same seat materials as 01 trim, but with special fire tested seat. 4" and larger bore size.
02/42	Filled TFE	TFE	Seat material is TFE filled with inert materials for use at elevated temperatures and pressures. Same chemical resistance as Virgin TFE except slightly affected by hot concentrated alkaline solutions. Some chlorinated compounds can cause swelling. Also recommended for low temperature service -50°F. Good for vacuum service. Fire tested seals for 3-piece valves.
02F	Filled TFE	TFE	Fire tested trim for 2-piece design valves. Same seat material 02 but with special fire tested seat. 4" and larger bore size.
43	Homopolymer Acetal Plastic	TFE	For general use at high pressures to temperature of 220°F.
48	Homopolymer Acetal Plastic	Filled TFE	For general use at high pressures to temperature of 220°F. Used on weld end valves 3" bore size and smaller.
07	†Viton™/SS	TFE	High and low pressure block and bleed. General use for low pressure & abrasion resistance. Not suitable for steam. Good for vacuum service.
14	Filled TFE	TFE	Same as 02, except for 6" and larger valves for temperatures above 250°F.
14F	Filled TFE	TFE	Fire tested trim for 2-piece design valves. Same seat material as 14, but with fire tested seat. 4" and larger bore size.
18	HPT-2	Filled TFE	HPT-2 is a special TFE formulation for use at temperatures above 02 capability. Best suited for constant temperature or constant pressure applications. Proven service in steam, hot oil, heat-transfer fluids, hot resins, boiler feed water. Same chemical resistance as TFE. Slightly affected by hot, concentrated alkaline solutions. Some fluorinated compounds cause swelling.
23	Celcon™	TFE	For use in high pressure applications. Temperature limited to 225°F (1/4" – 3/4" bores only).
28	Filled TFE	Filled TFE	Same as 02 except tailpiece gasket is filled TFE. Used on weld-end valves 4" and larger.
60	Stellite	Filled TFE	Special Stellite seats for digester blowdown service, spent liquor and steam applications common to the pulp/paper industry. Leakage Class V.
60A	Stellite	Filled TFE	Special Stellite seats for use when hard faced metal seats are required for applications outside the pulp and paper industry. Leakage Class V.
92H	316 SS with Chrome Oxide and Filled TFE	Filled TFE	For temperature to 600°F. For slurries, abrasives, steam, hot water. Leakage Class V.

Note: Trim 07 and 18 should be tested for each application by actual use.

†Trim sizes smaller than 1½" in trims 07 are 100% elastomeric. Sizes 1½" and larger are elastomeric with a metal insert.

Pressure/Temperature for all 310 Series Valves

DynaSeal 310 ball valves are rated for high performance and long life. The ratings shown here are based on tests which indicate good seat performance and acceptable wear. This rating is determined by the lower of the valve's maximum body pressure or seat rating. The seat rating is the maximum differential pressure to which the valve should be subjected on a continuous basis. Seal codes 01, 02, 42 and 07 are suitable for vacuum service to 20 microns, absolute (minimum temperature 0°F).

Seal Code 01, 01F

Temp °F	Valve Bore Size (in)				
	1/4 – 3/4	1–1 1/2	2	3–4	6–12
-50 to 100	1500	1000	750	600	285
200	1500	1000	750	600	285
250	1400	900	700	550	150
300	1100	650	500	425	50
350	600	375	300	250	—
400	100	100	100	100	—

Seal Code 42

Temp °F	Valve Bore Size (in)		
	1/4 – 1 1/2	2	3
-50 to 100	1500	1500	740
200	1400	1325	740
250	1250	1150	740
300	1090	975	740
350	930	800	590
400	770	640	450
450	610	475	325
500	450	300	200

Seal Code 43, 48

Temp °F	Valve Bore Size (in)		
	1/4 – 1 1/2	2	3
-50 to 100	3000	3000	1500
200	3000	3000	1500
220	3000	3000	1375

Seal Code 07*

Temp °F	Valve Bore Size (in)		
	1/4 – 1 1/2	2	3
-20 to 300	740*	500*	285*
350	500	350	200
400	250	190	100

*Block and Bleed Range.

Seal Code 14, 14F, 02, 02F

Temp °F	Valve Bore Size (in)	
	6–12	4
-50 to 225	740	740
250	675	740
300	550	740
350	410	590
400	300	400
450	175	325
500	65	200

Seal Code 18

Temp °F	Valve Bore Size (in)			
	1/4 – 1 1/2	2	3	4–12
-50 to 100	2250	2250	1500	740
200	2000	1350	1200	740
250	1775	1250	950	675
300	1650	1175	740	600
350	1575	1075	700	500
400	1500	1000	650	400
450	1300	875	600	300
500	1075	725	550	200
550	850	600	500	100
600	350	100	75	-0-
625	100	-0-	-0-	-0-

Seal Code 23

Temp °F	Valve Bore Size (in)	
	1/4 – 3/8	1/2 – 3/4
-50 to 100	5000	3750
200	3250	2000
225	2500	1500

Seal Code 60, 60A, 92H

Temp °F	Trim 60/60A	Trim 92H
-50 to 100	740	740
200	675	680
250	665	675
300	655	650
350	645	575
400	635	475
450	617	375
500	600	275
550	575	200
600	550	100

Pressure/Temperature Limits for all 310 Valves

Flanged Valves

These are maximum working pressure ratings for the valve body assembly at various temperatures. Practical pressure limitations according to actual service conditions are determined by the seal and tailpiece gasket materials.

Maximum Working Pressures—psig

Temp °F	Body Material Codes					
	CS, CS2 & CS3			S1 & S8		
Valve Class	150	300	600	150	300	600
-20 to 100	285	740	1480	275	720	1440
150	272	707	1415	257	670	1340
200	260	675	1350	240	620	1240
250	245	665	1332	227	590	1180
300	230	655	1315	215	560	1120
350	215	645	1292	205	537	1075
400	200	635	1270	195	515	1030
450	185	617	1235	182	497	992
500	170	600	1200	170	480	955
550	155	575	1147	155	465	930
600	140	550	1095	140	450	905

Maximum Working Pressures—bars (1 bar = 14.5 psi)

Temp °C	Body Material Codes					
	CS, CS2, CS3			S1 & S8		
Valve Class	20PN	50PN	100PN	20PN	50PN	100PN
-29 to 38	20	51	102	19	50	100
66	19	49	98	18	46	92
93	18	47	93	17	43	86
121	17	46	92	16	41	81
149	16	45	91	15	39	77
177	15	44	89	14	37	74
204	14	44	88	13	36	71
232	13	43	85	13	34	68
260	12	41	83	12	33	66
288	11	40	79	11	32	64
316	10	38	75	10	31	62

Threaded Valves

Body trim code S8 and CS3 are suitable for service to -50°F. All other trims are limited to operating temperatures no lower than -20°F. These pressure-temperature ratings are in conformance with ANSI B16.5, B16.34.

Maximum Working Pressures—psig

Temp °F	Body Material Codes							
	CS, CS2 & CS3				S1 & S8			
Valve Bore Size (in)	1/4 – 3/8	1/2 – 3/4	1 – 2	3 – 4	1/4 – 3/8	1/2 – 3/4	1 – 2	3 – 4
-20 to 100	5000	3750	3000	740	5000	3750	3000	720
150	5000	3000	2300	707	5000	3000	2300	670
200	4550	2730	2025	675	4300	2575	1860	620
250	4490	2690	1997	665	4090	2450	1770	590
300	4430	2650	1970	655	3880	2325	1680	560
350	4350	2605	1935	645	3720	2330	1610	537
400	4275	2560	1900	635	3560	2140	1540	515
450	4155	2490	1847	617	3435	2065	1487	497
500	4040	2425	1795	600	3310	1990	1435	480
550	3865	2315	1717	575	3220	1930	1395	465
600	3690	2210	1640	550	3130	1875	1355	450

Maximum Working Pressures—bars (1 bar = 14.5 psi)

Temp °C	Body Material Codes							
	CS, CS2 & CS3				S1 & S8			
Valve Bore Size (mm)	6 – 10	15 – 20	25 – 50	76 – 100	6 – 10	15 – 20	25 – 50	76 – 100
-29 to 38	345	259	207	51	345	259	207	50
66	345	207	159	49	345	258	159	46
93	314	188	140	47	297	178	128	43
121	310	186	138	46	282	169	122	41
149	306	183	136	45	268	160	116	39
177	300	180	133	44	257	154	111	37
204	295	177	131	44	246	148	106	36
232	287	172	127	43	237	142	103	34
260	279	167	124	41	228	137	99	33
288	267	160	118	40	222	133	96	32
316	254	152	113	38	216	129	93	31

Ball Valve Parts Detail

1/4" – 3/4" Full Bore

1" Regular Port

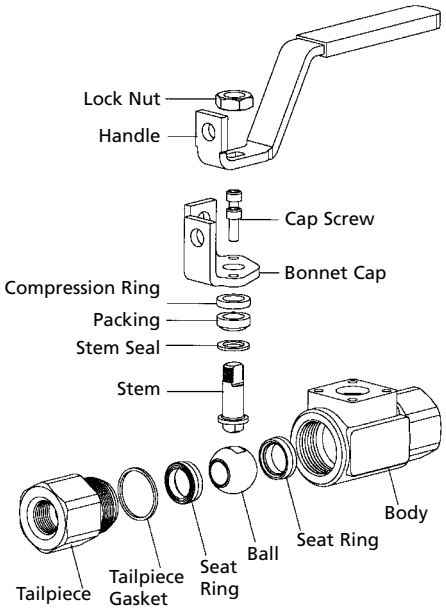

Ball Valve Parts Detail

1" – 1 1/2" Full Bore

2" Regular Port

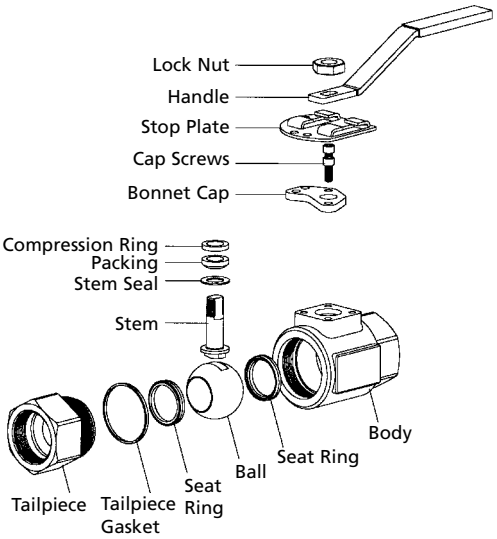

Ball Valve Parts Detail

2" – 3" Full Bore

3"x2" – 4" Regular Port

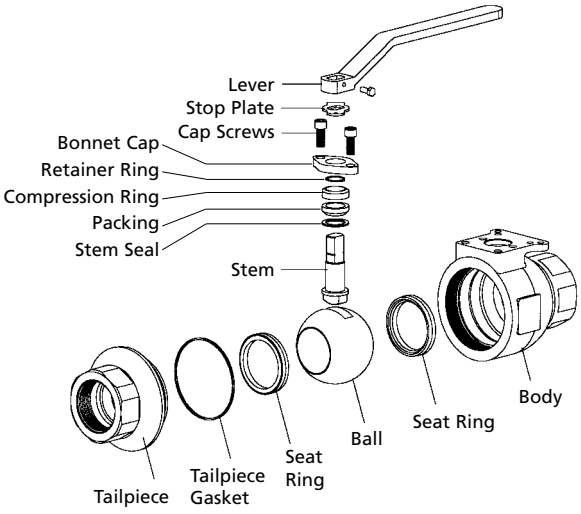

Ball Valve Parts Detail

1" – 1½" Full Bore

2" Regular Port

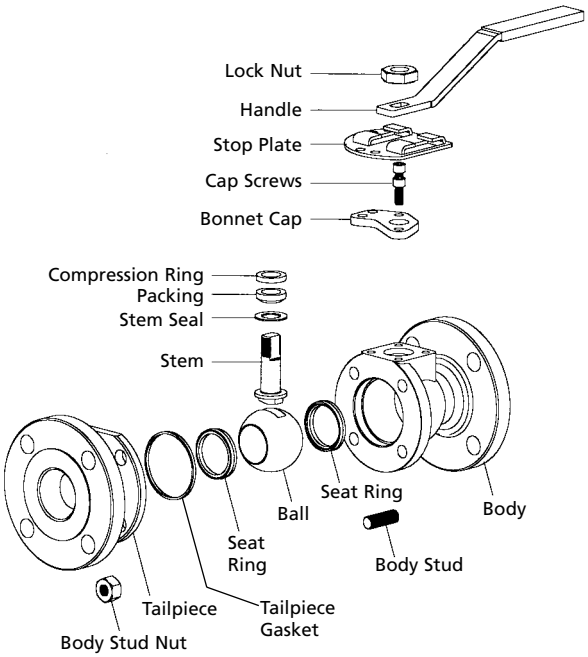

Ball Valve Parts Detail

2" – 3" Full Bore

3x2" – 4" Regular Port

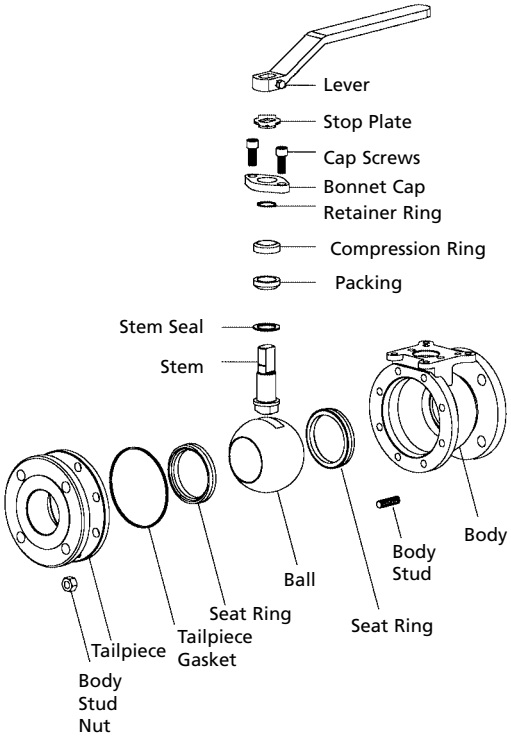

Unibody Ball Valve Parts Detail

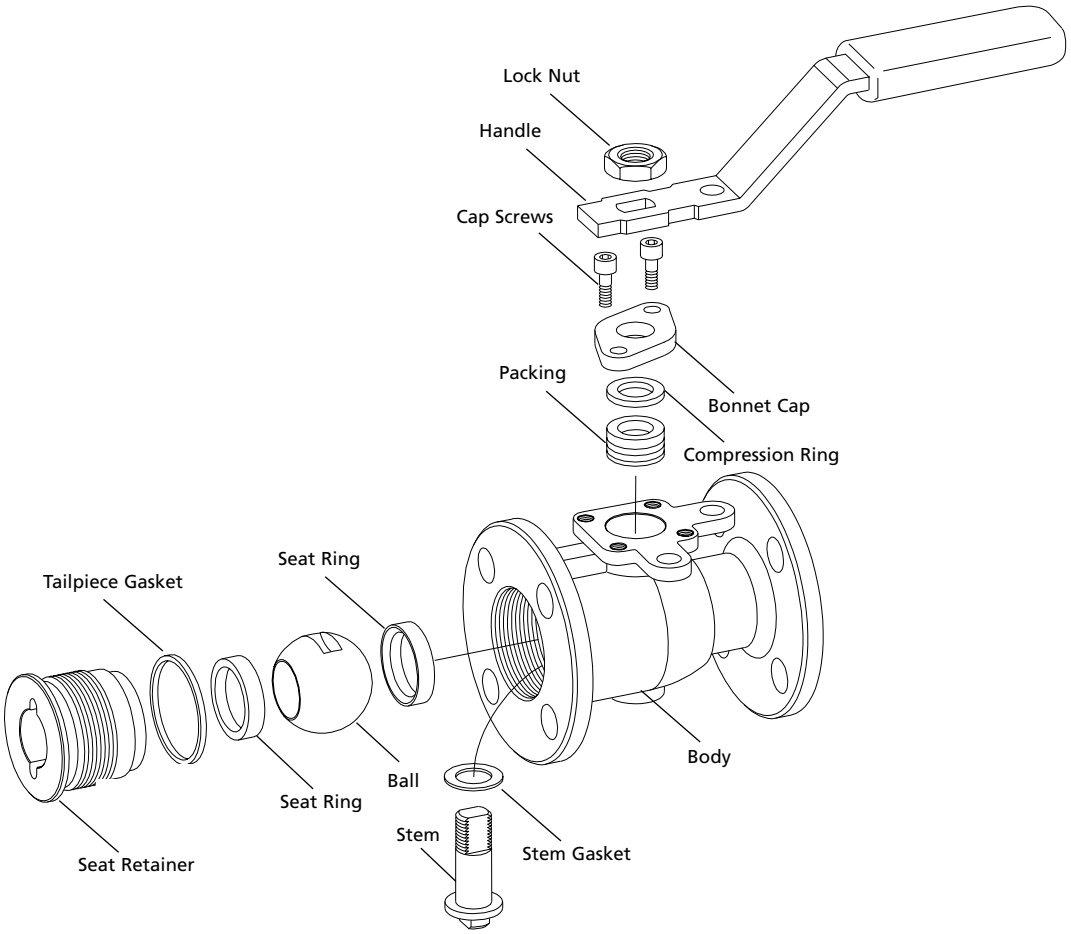

SD-24099

Standard Materials (Unibody)

Body-Tailpiece/Seat Retainer Material Codes

Part	CS	CS2*	S1	S8
Body	ASTM A216 WCC		ASTM A351 Gr CF8M	
Body Plug	ASTM A105		316 SS	
Seat Retainer	AISI 1018		316 SS	
Bonnet Cap	Carbon Steel Zinc Plated			316 SS
Packing Adjusting Screws	Alloy Steel Plated	18-8 SS	Alloy Steel Plated	18-8 SS

Note: 1/2"–2"R CS2/S8 — Used with S2 internal trim only. For H_2S service per NACE MR-01-75.

2"F–4"R CS2/S8 — Used with S1 internal trim only. For H_2S service per NACE MR-01-75.

Seat-Seal Material Codes

Part	01	42	43	07	18	60A*	92H*
Seat	TFE	Filled TFE	Acetal Plastic	Viton	Special Filled TFE	Stellite	316 SS Chromium Oxide Coated
Rear Seal	—					Braided Graphite	Filled TFE
Tailpiece Gasket	TFE				Filled TFE		
Stem Seal	TFE	Filled TFE					
Packing	TFE**				Graphite Packing		

*1"F and larger (60A supplied with 316SS ball, 92H supplied with Chromium Oxide Coated 316SS Ball).

**3/4"and smaller – Graphite Packing.

Ball-Stem Material Codes

Part	CS	S1	ML	S2
Ball	AISI 1213 Hard Chrome Plate	316 SS*	B164 Class B Ni-Cu Alloy	316 SS
Spring for Grounding Device	—	304 SS†		
Stem	AISI 1213 Zinc Plated	316 SS	B164 Class B Ni-Cu Alloy	17-4 PH
Compression Ring	Carbon Steel Zinc Plated	18-8 SS		

†When specified.
*Chromium Oxide Coated when seat-seal code 92H specified.

Actuator Codes

Part (Body)	CS, CS2, S1	S8
Lock Nut	Alloy Steel, Plated	18-8 SS
Handle	Carbon Steel Zinc Plated	SS*
Handle Grip†	Vinyl	Vinyl

*2"R and smaller SS, 2F and larger alloy steel.
†2"R and smaller only.

Dimensional Data (Unibody)

B102-Regular Port — 150 Raised Face Flanges
B112-Full Bore — 150 Raised Face Flanges

B122-Regular Port — 300 Raised Face Flanges
B130-Full Bore — 300 Raised Face Flanges

Regular Port / Full Bore

Top View
(All sizes except 3"R and 4"R)

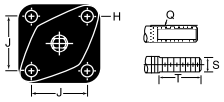

Stem Dimensions

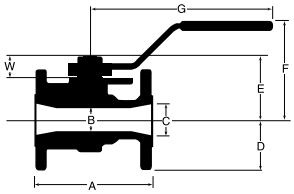

Front View

Regular Port

Top View
(3"R and 4"R only)

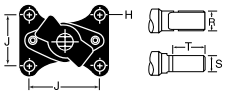

Stem Dimensions

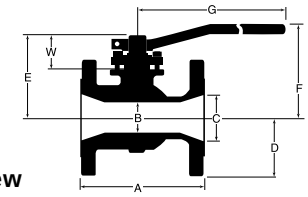

Front View

Unibody Dimensional Data (in)

Size	Dimension A				Approximate dimensions in inches												
	150Flg B102	300Flg B122	150Flg B112	300Flg B130	B	C	D	E	F	G	Q*	R	S	T	J	W	H*
1/2 F	—	—	4.25	—	.50	.50	1.75	1.8	3.5	5.8	7/16-20	—	.246	.41	1.00	.72	10-24 .38 DP
	—	—	—	5.50	.50	.50	1.38	1.8	3.5	5.8	7/16-20	—	.246	.41	1.00	.72	10-24 .38 DP
3/4 R	4.62	—	—	—	.50	.75	1.94	1.8	3.5	5.8	7/16-20	—	.246	.41	1.00	.72	10-24 .31 DP
	—	6.00	—	—	.50	.75	2.31	1.8	3.5	5.8	7/16-20	—	.246	.41	1.00	.72	10-24 .31 DP
1 R	5.00	—	—	—	.75	1.00	2.13	2.3	4.0	6.7	7/16-20	—	.246	.48	1.00	.84	10-24 .25 DP
	—	6.50	—	—	.75	1.00	2.44	2.3	4.0	6.7	7/16-20	—	.246	.48	1.00	.84	10-24 .25 DP
1 F	—	—	5.00	—	1.00	1.00	2.13	2.8	4.3	7.8	5/8-18	—	.356	.58	1.25	1.02	1/4-20 Thru
	—	—	—	6.50	1.00	1.00	2.44	2.8	4.3	7.8	5/8-18	—	.356	.58	1.25	1.02	1/4-20 Thru
1 1/2 R	6.50	—	—	—	1.00	1.50	2.50	2.8	4.3	7.8	5/8-18	—	.356	.58	1.25	1.02	1/4-20 Thru
	—	7.50	—	—	1.00	1.50	3.06	2.8	4.3	7.8	5/8-18	—	.356	.58	1.25	1.02	1/4-20 Thru
2 R	7.00	—	—	—	1.50	2.00	3.00	3.6	5.3	8.5	3/4-16	—	.430	.64	1.50	1.21	5/16-18 Thru
	—	8.50	—	—	1.50	2.00	3.25	3.6	5.3	8.5	3/4-16	—	.430	.64	1.50	1.21	5/16-18 Thru
3 R	8.00	—	—	—	2.00	3.00	3.75	5.0	5.4	15.0	—	1.12	.692	.81	2.66	1.88	.44 Thru
	—	11.12	—	—	2.00	3.00	4.13	5.0	5.4	15.0	—	1.12	.692	.81	2.66	1.88	.44 Thru
4 R	9.00	—	—	—	3.00	4.00	4.50	6.4	6.6	15.0	—	1.12	.692	1.21	3.00	2.32	.56 Thru
	—	12.00	—	—	3.00	4.00	5.00	6.4	6.6	15.0	—	1.12	.692	1.21	3.00	2.32	.56 Thru

Unibody Dimensional Data (mm)

Size	Dimension A				Approximate dimensions in millimeters												
	150Flg B102	300Flg B122	150Flg B112	300Flg B130	B	C	D	E	F	G	Q*	R	S	T	J	W	H*
13 F	—	—	108	—	13	13	44	46	89	147	7/16-20	—	6	10	25	18	10-24 .38 DP
	—	—	—	140	13	13	44	46	89	147	7/16-20	—	6	10	25	18	10-24 .38 DP
19 R	117	—	—	—	13	19	49	46	89	147	7/16-20	—	6	10	25	18	10-24 .31 DP
	—	152	—	—	13	19	49	46	89	147	7/16-20	—	6	10	25	18	10-24 .31 DP
25 R	127	—	—	—	19	25	54	58	102	170	7/16-20	—	6	12	25	21	10-24 .25 DP
	—	165	—	—	19	25	54	58	102	170	7/16-20	—	6	12	25	21	10-24 .25 DP
25 F	—	—	127	—	13	13	54	72	109	198	5/8-18	—	9	15	32	26	1/4-20 Thru
	—	—	—	165	13	13	54	72	109	198	5/8-18	—	9	15	32	26	1/4-20 Thru
48 R	165	—	—	—	25	38	64	71	109	198	5/8-18	—	9	15	32	26	1/4-20 Thru
	—	191	—	—	25	38	64	71	109	198	5/8-18	—	9	15	32	26	1/4-20 Thru
51 R	180	—	—	—	38	51	76	91	135	216	3/4-16	—	11	16	38	31	5/16-18 Thru
	—	216	—	—	38	51	76	91	135	216	3/4-16	—	11	16	38	31	5/16-18 Thru
76 R	203	—	—	—	51	76	95	127	137	381	—	28	18	21	68	48	.44 Thru
	—	282	—	—	51	76	95	127	137	381	—	28	18	21	68	48	.44 Thru
102 R	229	—	—	—	76	102	114	163	168	381	—	28	18	21	76	59	.56 Thru
	—	305	—	—	76	102	114	163	168	381	—	28	18	21	76	59	.56 Thru

*American National Thread in inches.

Flow Characteristics (C_V)*

Valve Size and Port Size (in)	Valve Pressure Class	
	150	300
1/2 × 1/2	16	14
3/4 × 1/2	10	10
1 × 3/4	35	34
1 × 1	88	77
1 1/2 × 1	33	33
2 × 1 1/2	123	122
3 × 2	123	122
4 × 3	413	410

*Flow of water in U.S. gallons per minute per 1psi pressure drop across a fully open valve.

Weights (with Lever)

Valve Size	End Connection			
	(lbs)		(kg)	
	150	300	150	300
1/2 F	3.8	5.0	1.7	2.3
1 R	6.3	8.8	2.9	4.0
1 F	8.5	12	3.9	5.4
1 1/2 R	12	18	5.4	8.2
1 1/2 F	17	24	7.7	11
2 R	19	24	8.6	11
3 × 2	39	51	18	23
4 R	64	94	29	43

Floating Ball Valve Parts Detail
(3x2" shown)

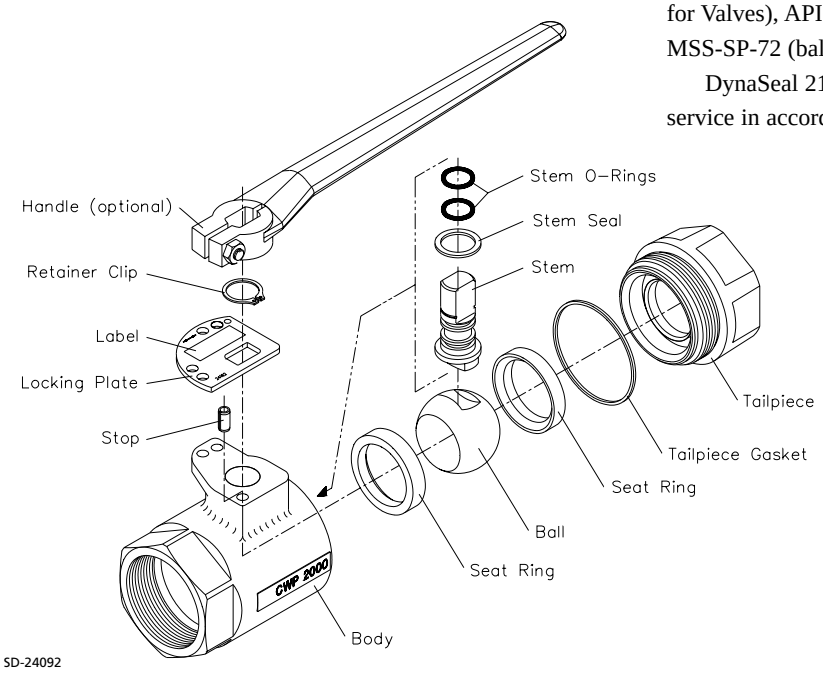

Standards and Specifications

DynaSeal 210A ball valves comply with the following design and testing standards: MSS-SP-25 (Standard Marking System for Valves), API 607 (Fire Test Specification, Third Edition), MSS-SP-72 (ball valves for General Service).

DynaSeal 210A ball valves can be trimmed for sour gas service in accordance with NACE MR-01-75 (latest issue).

How to Order

(Ex: Std trim 2x1 1/2" 2000 psi valve, no handle: 24132-4131100) – H_2S, NACE trim suffix code = -X13220X

XXXXX	–	2	1	X	X	X	0	X
Base Part Number		Pressure Rating (CWP)	Body Material	Seat Trim	Seal Material	Ball & Stem		Handle

Size (in)	Base #
1x1	24190
2x1 1/2	24132
2x2	24056
2 1/2x2	24059
3x2	24063
3x3	24178*
4x3	24211*

1000 psi*	2
1500 psi	3
2000 psi	4

Ductile Iron Line Pipe Threaded End	1

Buna	1
Viton	2

Acetal Plastic (43)	3
Filled Teflon (42)	5

Carbon Steel	1
Stainless Steel	2

No Handle	0
Handle	1
No Handle w/Seal Pin	2
Handle w/Seal Pin	3

*1000 psi rating on 210A available on 3x3 only; maximum available pressue rating for 4x3 and 3x3 1500 psi. See 210L for 1000 psi Ductile Iron, Threaded End ball valves.

Standard Materials

Part	Material
Body/Tailpiece	ASTM A395 Ductile Iron
Ball	(CS) AISI 1213 Carbon Steel, Hard Chrome Plated
	(SS) 316 SS
Stem	(CS) AISI 1213 Carbon Steel, Zinc Plated
	(SS) 316 SS
Seat	42 Filled TFE
	43 Acetal Plastic
Tailpiece Gasket	PTFE
Stem Seal	Filled TFE
Stem O-Ring	(B) Buna N
	(V) Viton
Handle	1" and 1½" Bore Carbon Steel, Zinc Plated w/ Vinyl Grip
	2" and 3" Bore Ductile Iron
Handle Lock Nut/clip	Alloy Steel, Plated (1" bore valves); Steel Clip on 2" RP Valves

*For H_2S service use Trim Code -X13220X. Meets NACE MR-01-75 (see "How to Order" pg 30).

Pressure/Temperature Limits

Seat Seal Codes 43

Temp °F	Valve Bore Size (in)/Pressure (psi)	
	1 – 2	3
-50–220	2000	1500

Seat Seal Codes 42

Temp °F	Valve Bore Size (in)/Pressure (psi)		
	1 – 1½	2	3
-50 – 100	1500	1500	740
200	1400	1325	740
250	1250	1150	740
300	1090	975	740
350	930	800	590

Weights

Regular Port

Operation	Valve Size (in)/Weight (lbs)			
	2 x 1½	2½ x 2	3 x 3	4 x 3
w/o handle (lbs)	9.4	15.5	16.6	35.5
with handle (lbs)	9.9	18.0	19.8	38.7

Full Bore

Operation	Valve Size (in)/Weight (lbs)		
	1	2 x 2	3 x 3
w/o handle (lbs)	4.0	14.4	42.8
with handle (lbs)	4.5	17.6	46.0

Regular Port (R)

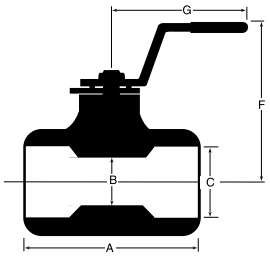

Front View

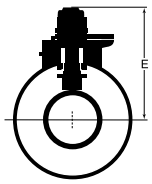

Side View

Full Bore (F)

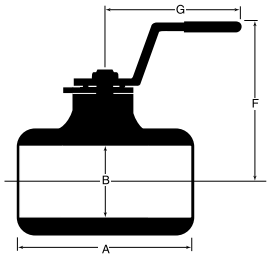

Front View

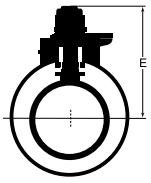

Side View

Dimensional Data (in)

Size	Dimension A		Approx. dim. in inches				
	R	F	B	C	E	F	G
1 F	–	4.00	1.00	1.00	2.77	4.0	7.1
2 R	5.55	–	1.50	2.00	3.56	4.9	7.1
2 F	–	6.00	2.00	2.00	4.50	4.9	15.0
2½ R	7.00	–	2.00	2.50	4.50	4.9	15.0
3 R	7.25	–	2.00	3.00	4.50	4.9	15.0
3 F	–	8.75	3.00	3.00	5.66	6.0	15.0
4 R	8.75	–	3.00	4.00	5.66	6.0	15.0

W-K-M
Ductile 210D Floating Ball Valve

W-K-M, the leading supplier of valves to the gas utility industry, introduces its maintenance-free floating Ductile ball valve as the competitively-priced, smart alternative to low pressure cast iron plug valves. Many gas meter valves are in hard to reach locations so valve reliability is the first consideration.

Features & Benefits

- The W-K-M 210D Ductile ball valve needs no lubrication, eliminating costs and storage requirements associated with grease purchases and grease guns.
- Its virtually maintenance-free operation results in less downtime and makes it the ideal valve to replace gas meter plug valves with their high-maintenance requirements and sealing problems.
- Using the highest grade of ductile iron, the 210D is proven tough with strength approaching that of carbon steel, offering raised face flanged ends as standard (with flat face flanged ends as an option), and is available in standard carbon steel trim or stainless steel trim, meeting NACE Standard MR-01-75, latest edition, requirements.
- The 210 D provides locking capability in either the 'valve open' or 'valve closed' position as standard to ensure safety.
- And as with all W-K-M DynaSeal ball valves, the 210D offers deep pocketed seats to surround and protect the seat on all sides, contributing to longer service life; superior dual stem seal design further protects against line media, prevents stem seizure and reduces torque.

210D Body / Seat Retainer Materials

ITEM	MATERIAL DESCRIPTION	MATERIAL SPECIFICATION
Body	Ductile Iron	ASTM A395
Seat Retainer	Ductile Iron or Steel	ASTM A395 or AISI 1020

210D Ball / Stem Materials

ITEM	MATERIAL CS TRIM	MATERIAL SS TRIM
Ball	AISI 1213 Hard Chrome Plate	316 SS
Stem (2")	AISI 1213 Zinc Plated	17-4PH
Stem (3" & 4")	AISI 1213 Zinc Plated	316 SS

210D Seat / Seal Materials

ITEM	MATERIAL	MATERIAL
Seat Ring	Filled TFE (42)	Acetal Plastic (43)
Tail Piece Seal	TFE	–
Stem O-Ring	Buna N	Viton
Stem Gasket	Filled TFE	–

Viton® is a registered trademark of E. I. Dupont de Nemours & Company

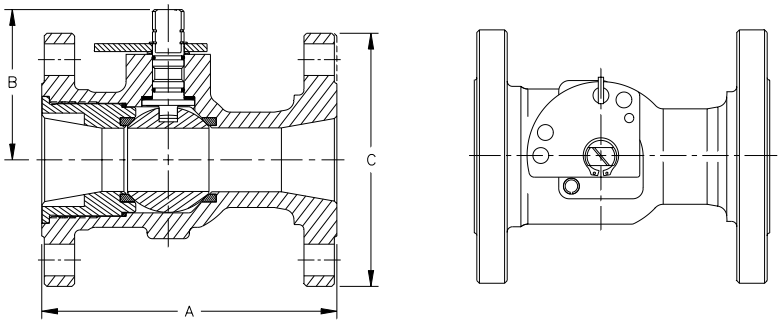

Class 125 (FF) Flat Face Class 150 (RF) Raised Face

Spring pin shown out of section

Series 125/150

DIM	SIZE		
	2R	3R	4R
A	7.00	8.00	9.00
B	3.33	4.47	5.64
C	6.00	7.50	9.00

How to Order Standard Trim (Carbon Steel with TFE Seat/Buna N Stem Seals)*

SIZE	DESCRIPTION	PART NUMBER	HANDLE (order separately)	SQ NUT (order separately)
2x1 1/2	Class 150 RF	25048-1121100	2140961-01	2140974-01
3x2	Class 150 RF	25049-1121100	2083594-04	2140975-01
4x3	Class 150 RF	25050-1121100	2083594-04	2140975-01

*Consult factory for complete ordering information and data sheet.

How to Order (Example: Std trim 2" 24925-2131100) H_2S NACE trim suffix code = std -213220X unidired -213240X

XXXXX	–	2	1	X	X	X	0	X
Base Part Number		Pressure Rating (CWP)	Body Material	Seat Trim	Seal Material	Ball & Stem		Handle

1000 psi	2

Ductile Iron Line pipe Threaded End	1

Buna	1
Viton	2

Valve Size	Part Number
2 × 1-1/2	24925
3 × 2	24926
4 × 3	24927

Nylon (4 × 3 only)	1
Acetal Plastic (43) (2 × 1 1/2 & 3× 2)	3
Filled Teflon (42) (2 × 1 1/2 & 3× 2)	5
Filled Teflon (42) (4 × 3)	2

Carbon Steel	1
Stainless Steel	2
Carbon Steel Undirectional	3
Stainless Steel Undirectional	4

No Handle w/Seal Pin	2
Handle w/Seal Pin	3

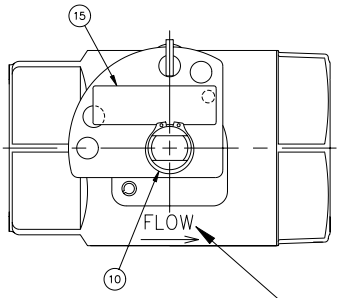

2" and 3" RP

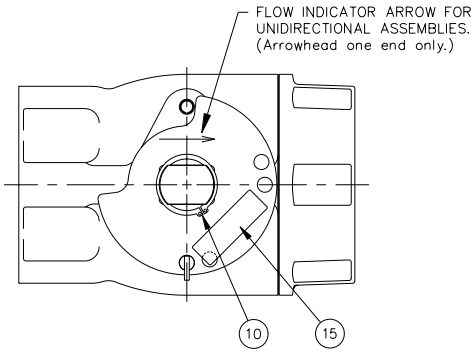

4" RP

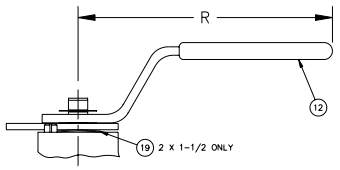

Optional 2 x 1-1/2 handle

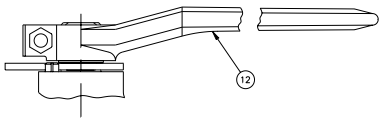

Optional 3 x 2 handle

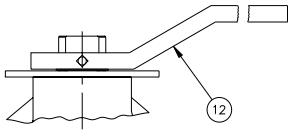

Optional 4 x 3 handle

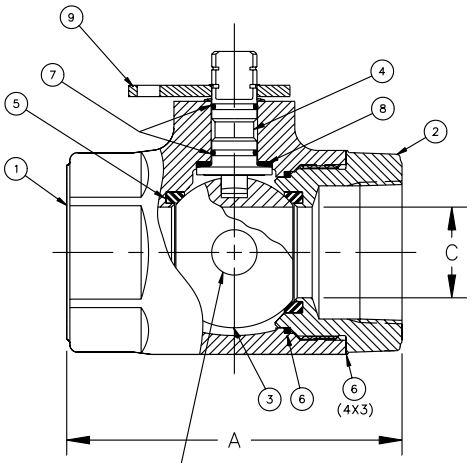

RELIEF HOLE,
UNIDIRECTIONAL FREEZE TOLERANT ASSEMBLIES ONLY.
Ball is installed so that hole is upstream when valve is closed (body side installed upstream).

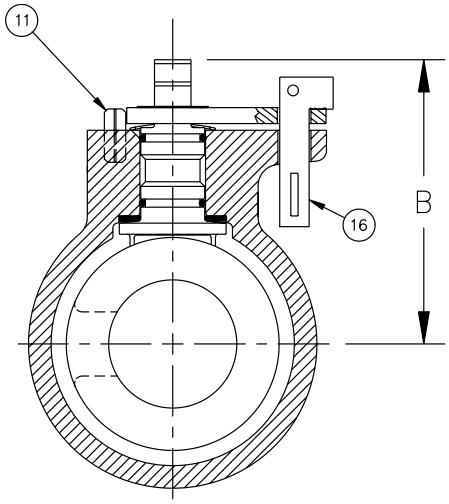

Parts List

Ref. No.	Req'd.	Description	Material
1	1	Body (LPT) (1)*	Ductile Iron ASTM A395
2	1	Tail Piece (LPT) (1)	Ductile Iron ASTM A395
3	1	Ball (1)	Carbon Steel, Chrome Plated
		(2)	316 Stainless Steel
4	1	Stem (1)	Steel AISI 1213/1215, Zinc Plated
		(2)	316 SS (17-4 PH SS on 2 × 1 1/2)
5	2	Seat Ring (3)	Acetal Plastic (43)
		(1)	Nylon (4 x 3)
		4 x 3 – (2) 2 x 1 1/2 & 3 x 2 – (5)	Teflon (42)
6	1	Body Seal	Teflon†
7	2	Stem Seal (1)	Buna-N
		(2)	Viton
8	1	Stem Gasket (Thrust Bearing)	Teflon
9	1	Stop Plate	Steel 1018/26
10	1	Stop Plate Retaining Ring	Spring Steel
11	1	Stop Pin	Spring Steel
12	1	Handle	2 × 1 1/2: Carbon Steel, Zinc Plated
			3 × 2: Ductile Iron ASTM A395
			4x3: Carbon Steel, Painted
15	1	Label	Adhesive Backed Mylar
16	1	Seal Pin	Brass or Aluminum

*Part # option code ().
†4x3 valves, body seal switched from Buna N to Teflon midyear 1998.

Dimensional Data (inches)

Dimension		Valve Size		
		2 × 1 1/2	3 × 2	4 × 3
A		5.55	7.25	8.74
B	No Handle	3.56	4.50	5.50
	With Handle	4.86	4.94	—
C		1.50	2.00	3.00
R		7.06	15.00	21.56

Weight (lbs)

Dimension	Valve Size		
	2 × 1 1/2	3 × 2	4 × 3
No Handle	9.4	16.6	29.1
With Handle	9.9	19.8	—

Pressure/Temperature limits – see DynaSeal 210A, page 31.

1. CONTRACT ACCEPTANCE:

Any written or oral purchase order received from Buyer by Cooper Cameron Corporation, Cameron Division and Cooper Cameron Valves ("Seller") shall be construed as a written acceptance of Seller's offer to sell and shall be filled in accordance with the terms and conditions of sale set forth herein. SELLER'S ACCEPTANCE OF THIS ORDER IS EXPRESSLY CONDITIONED ON BUYER'S ASSENT TO THE TERMS CONTAINED HEREIN. The terms and conditions of Seller's proposal (if any) and acknowledgement shall prevail over any conflicting or different terms in Buyer's order unless Buyer notifies Seller in writing of its objections thereto within fifteen (15) days from receipt of Seller's acknowledgement. Buyer's standard terms of purchase will not be considered a counteroffer to Seller's terms and conditions of sale. The failure of Seller to object to any provision in conflict herewith whether contained on Buyer's purchase order or otherwise shall not be construed as a waiver of the provisions hereof nor as an acceptance thereof.

2. QUOTATIONS AND PRICES:

All quotations are made for prompt acceptance and any terms quoted therein are subject to change without notice after thirty (30) days from the date quoted unless specifically stated otherwise on the quotation. Any product, service capability or manufacturing capability which may be available at the time a quotation is made is subject to prior sale. Prices quoted are valid for thirty (30) days unless specifically stated otherwise on the quotation and are subject to change without notice. The price in effect at the time of shipment including any escalation formula will apply, unless a valid quotation or written agreement to the contrary exists between Buyer and Seller. All prices shown are in U.S. dollars and are F.O.B. Seller s shipping point. Any documentation pertaining to traceability requirements for raw materials or products or documentation required for any routine or special processes must be identified by the Buyer at the time of quotation (if any) or at the time of order placement.

3. TAXES:

Any tax or other charge imposed by law on the sale or production of goods or the performance of services shall be paid by the Buyer, unless the law specifically provides that such payment must be made by Seller, in which case Buyer shall reimburse Seller for such payment as part of the purchase price. Custom duties, consular fees, insurance charges and other comparable charges will be borne by Buyer.

4. SHIPPING SCHEDULE AND DELIVERY:

Shipment schedules are given as accurately as conditions permit and every effort will be made to make shipments as scheduled. Seller will not be responsible for deviations in meeting shipping schedules nor for any losses or damages to Buyer (or any third party) occasioned by deviations in the shipping schedule, whether due to Acts of God, orders bearing priority ratings established pursuant to law, differences with workmen, local labor shortages, fire, flood, shortages or failure of raw materials, supplies, fuel, power or transportation, breakdown of equipment or any other causes beyond Seller's reasonable control, whether of similar or dissimilar nature than those enumerated. Seller shall have additional time within which to perform as may be reasonably necessary under the circumstances and shall have the right to apportion its production among its customers in such a manner as it may consider to be equitable. Seller reserves the right to furnish commercially equivalent or better substitutes for materials or to subcontract the Buyer's order or portions thereof as Seller deems necessary. In no event shall Seller be liable for any consequential damages for labor resulting from failure or delay in shipment. If Buyer requires drawings, procedures, standards or similar material for approval, shipping schedules will be calculated from the time such approvals are received by Seller, since shipping schedules are based on Seller having all required information and a firm order from Buyer which is enterable into production. Any hold points, witness points or the need for inspection by Buyer's representatives must be identified by Buyer at the time of quotation (if any) and/or order placement in order that the effect on the prices or shipping schedules (if any) can be taken into account. Additional inspection or testing required by Buyer which affects normal production sequence will be considered as extending the shipping dates accordingly.

5. MINIMUM BILLING:

Seller reserves the right to impose a minimum billing charge on all sales, change orders or order supplements.

6. TERMS OF PAYMENT:

Terms of payment for all materials and service are 30 days from invoice date, at net price, provided satisfactory credit has been established. All unpaid invoices are subject to the maximum legal interest rate per annum commencing with the due date.

7. CANCELLATIONS AND RETURNS:

Purchase orders once placed by Buyer and accepted by Seller can be canceled only with Seller's written consent and upon terms which will save Seller from loss. No products may be returned for credit or adjustment without written permission from Seller's office authorized to issue such permission.

8. WARRANTIES:

All products of Seller's manufacture are warranted against defects of material and workmanship for a period of twelve (12) months from the date of installation or eighteen (18) months from date of shipment, whichever period first expires, when such products are used in the service and within the pressure range for which they were manufactured. In the case of products or parts not wholly of Seller's manufacture, Seller's liability shall be limited to the extent of its recovery from the manufacturer of such products or parts under its liability to Seller.

Any repair work performed by Seller is warranted for one year from completion of such repairs and applies only to work performed.

If, within these specified periods, Seller receives notice from Buyer of any alleged defect in or nonconformance of any product or repair and if in the Seller's sole judgment the product or repair does not conform or is found to be defective in material or workmanship, then, Buyer shall, at Seller's request, return the part or product F.O.B. to Seller's designated plant or service location. Seller, at its option and expense, shall repair or replace the defective part or product, or repay to Buyer the full price paid by Buyer for such defective part, repair or product. Any repayment of purchase price shall be without interest.

Seller's warranty liability, including defects caused by Seller's negligence, shall be limited to such repair, replacement or refund, and shall not include claims for labor costs, expenses of Buyer resulting from such defects, recovery under general tort law or strict liability or for damages resulting from delays, loss of use, or other direct, indirect, incidental or consequential damages of any kind. Seller will not be responsible for failures of products which have been in any way tampered with or altered by anyone other than an authorized representative of Seller, failures due to lack of compliance with recommended maintenance procedures or products which have been repaired or altered in such a way (in Seller's judgment) as to affect the products adversely. THIS WARRANTY IS EXPRESSLY IN LIEU OF ALL OTHER WARRANTIES, EXPRESS, STATUTORY OR IMPLIED, INCLUDING THE WARRANTY OF MERCHANTABILITY AND FITNESS FOR PARTICULAR PURPOSE WHICH EXCEED THE FOREGOING WARRANTY.

9. NUCLEAR SALES:

The products sold hereunder are not designed or manufactured for use in or with any atomic installation or activity. If the Buyer or ultimate user of these products intends to use them in such an installation or activity, Seller's Nuclear Terms of Sale shall be part of and control this contract. Seller will furnish Buyer with a copy of its Nuclear Terms of Sale upon request.

10. PATENT INFRINGEMENT:

Seller warrants that the use or sale of material or apparatus sold or rented by it to Buyer hereunder will not infringe United States' patents of others covering such material or apparatus by itself, and hereby agrees to indemnify Buyer against judgment for damages for such infringement of any such patent, provided that Buyer shall, upon receipt of any claim for infringement of any such patent or threat of suit for such infringement or upon the filing of any suit for infringement, whichever comes first, promptly notify Seller in writing and afford Seller full opportunity, at its option and its own expense, to answer such claim or threat of suit, assume the control of the defense of said suit, and settle or compromise same in any way Seller sees fit. Other

than court-awarded judgments as aforesaid Seller shall not be liable for any delays, loss of use or for other direct, indirect, incidental or consequential damages incurred by reason of any such judgment. Seller does not warrant that such material or apparatus (a) will not infringe any such patent when not manufactured by or for Seller or when specially made in whole or in part to the Buyer's design specification and such infringement arises from the inclusion of such specified design or (b), if used or sold in combination with other material or apparatus, or if used in the practice of a process, will not, as a result of such combination or use, infringe any patent covering such combination or process; and Seller shall not be liable for and does not indemnify Buyer for damages or losses of any nature whatsoever resulting from actual or alleged patent infringement arising pursuant to (a) or (b) above.

11. SELLER'S RIGHT TO MANUFACTURE:

Seller in its sole discretion shall have the right to manufacture the products provided hereunder as far in advance of its estimated shipping schedule as it deems appropriate. Seller expressly reserves the right to change or modify the design and construction of any product in due course of Seller's manufacturing procedure without incurring any obligation or liability to furnish or install such changes, modifications or improvements to products previously or subsequently sold.

12. ENGINEERING AND SERVICE:

Upon request, Seller will provide engineering and/or technical information regarding its products and their uses and, if feasible, will provide personnel to assist Buyer in effecting field installations and/or field service. Any such information, service or assistance so provided, whether with or without charge, shall be advisory only. In that regard, neither Seller nor Buyer assumes any liability for the acts or omissions of the other party except as may be provided in these terms.

13. LABOR STANDARDS:

Seller hereby certifies that these products were produced in accordance with all applicable requirements of Section 6, 7 and 12 of the Fair Labor Standards Act as amended and of regulations and orders of the United States Department of Labor issued under Section 14 thereof.

14. INSPECTION:

Unless otherwise agreed in writing, final inspection and acceptance of products must be made at Seller's plant or other shipping or receiving point designated by Seller and shall be conclusive except as regards latent defects. Buyer's representatives may inspect at the Seller's plant or shipping point during working hours prior to shipment in such manner as will not interfere with operations.

15. TITLE:

Title to the products sold hereunder passes to Buyer upon payment of the full purchase price.

16. TRANSPORTATION CHARGES, ALLOWANCES, CLAIMS:

All prices are F.O.B. Seller's plant or other designated shipping point.

No freight is allowed unless stated in Seller's quotation (if any) or in a written contract which may exist between Seller and Buyer at the time of shipment. If Seller's quotation or a written contract states that all or a portion of freight is allowed, all prices are F.O.B. Seller's plant or other designated shipping point, with most economical surface transportation allowed. If the quoted or contractual price includes transportation, Seller reserves the right to designate the common carrier and to ship in the manner it deems most economical. Added costs due to special routing requested by the Buyer are chargeable to the Buyer. Under no circumstances is any freight allowance which is absorbed by Seller to be deducted from the selling price. If the quoted price or contract includes transportation, no deduction will be made in lieu thereof whether Buyer accepts shipment at plant, warehouse, freight station, or otherwise supplies its own transportation. When sales are made from the Seller's warehouse, Seller reserves the right to charge either actual or pro-rated freight from Seller's principle point of manufacture to Seller's warehouse. Buyer assumes risk of loss upon delivery to the carrier, regardless of who pays shipping costs.

Seller endeavors to pack or prepare all shipments so that they will not break, rust or deteriorate in transit, but does not guarantee against such damage. Unless requested in writing by the Buyer, no shipments are insured by Seller against damage or loss in transit. Seller will place insurance as nearly as possible in accordance with Buyer's written instructions but in such case Seller acts only as agent between the insurance company and the Buyer and assumes no liability whatsoever.

Any claims for shipping loss, breakage or damage (obvious or concealed) are Buyer's responsibility and should be made to the carrier. All claims regarding shortages must be made within thirty (30) days from receipt of shipment and must be accompanied by the packing list(s) covering the shipment.

17. CONSULAR INVOICES:

Consular fees for legalizing invoices, stamping bills of lading, or other documents required by the laws of any country or destination are not included in quotations or selling prices. If instructed in writing, Seller will make arrangements for consular documents and declarations as agent of the Buyer, but Seller assumes no liability whatsoever as a result of making such arrangements. Seller assumes no responsibility for any fines or other charges imposed due to errors or incorrect declarations.

18. INDEMNIFICATION AND LIMITATION OF LIABILITY:

A. INDEMNIFICATION:
Seller agrees to indemnify Buyer and hold Buyer harmless against any claims, demands or causes of action for property damage or personal injury (including death) caused by the negligent act or omission of any employee, agent or subcontractor of Seller and not contributed to by the negligence of Buyer, its employees, its agents or any third party. Seller shall not be responsible for the acts and workmanship of employees, agents, contractors or subcontractors of Buyer or any third party, nor for failure or malfunction of any tools, materials, equipment, products, supplies, facilities or devices not manufactured and supplied by Seller. Buyer agrees to hold Seller harmless from any and all losses, claims, or damages arising from subsurface damage, surface damage caused by subsurface damage, loss of hydrocarbons and from pollution, regardless of whether such damages, losses or claims were caused by the negligence or sole negligence of Seller, it being the intent of the parties that this indemnity shall apply to property of Buyer or to that of any third party.

B. LIMITATION OF LIABILITY:
UNDER NO CIRCUMSTANCES SHALL SELLER BE LIABLE FOR ANY SPECIAL, CONSEQUENTIAL OR INCIDENTAL DAMAGES, INCLUDING, BUT NOT LIMITED TO LOSS OF ANTICIPATED PROFITS, LOSS OF USE OF EQUIPMENT OR OF ANY INSTALLATION, SYSTEM OR FACILITY INTO WHICH SELLER'S EQUIPMENT MAY BE LOCATED OR AT WHICH SELLER, ITS AGENT OR SUBCONTRACTOR MAY BE PERFORMING WORK. Seller's total responsibility for any claims, damages, losses or liabilities arising out of or related to its performance of this contract or the products or services covered hereunder shall not exceed the purchase price.

19. MODIFICATION, RESCISSION & WAIVER:

The terms herein may not be modified or rescinded nor any of its provisions waived unless such modification, rescission or waiver is in writing and signed by an authorized employee of Seller at its office in Houston, Texas.

Failure of Seller to insist in any one or more instances upon the performance of any of the terms and conditions of the contract or the failure of Seller to exercise any of its rights hereunder shall not be construed as a waiver or relinquishment of any such term, condition, or right hereunder and shall not affect Seller's right to insist upon strict performance and compliance with regard to any unexecuted portions of this contract or future performance of these terms and conditions.

All orders must be accepted by an authorized employee of Seller. The rights and duties of the parties and construction and effect of all provisions hereof shall be governed by and construed according to the internal laws of the State of Texas. Any disputes which arise under this agreement shall be venued in the District Court of Harris County, Texas or in the Southern District of Texas.

References in this catalog to registered trademarks or product designations, which are owned by Cooper Cameron Corporation are as follows:

Cameron®
Demco®
DynaCentric®
DynaSeal®
Foster®
Pow-R-Seal®
Saf-T-Seal®
Thornhill Craver™
Unibolt™
W-K-M®

References in this catalog to registered trademarks or product designations, which are not owned by Cooper Cameron Corporation are as follows:

Celcon	Hoechst Celanese Corporation
Delrin	E. I. Dupont De Nemours & Company
Fluorel	Minnesota Mining and Manufacturing Company
Hastelloy	Haynes International, Inc.
Hycar	Hydrocarbon Chemical and Rubber Company
Hydrin	Zeon Chemicals USA, Inc.
Hypalon	E. I. Dupont De Nemours & Company
Inconel	INCO Nickel Sales, Inc.
Monel	INCO Alloys International, Inc.
Nordel	E. I. Dupont De Nemours & Company
Stellite	Stoody Deloro Stellite, Inc.
Teflon	E. I. Dupont De Nemours & Company
Viton	E. I. Dupont De Nemours & Company

USA
Cooper Cameron Valves
16500 South Main Street
Missouri City, TX 77489-1300
Phone: 281-499-8511
Fax: 281-499-6965

UK
Cooper Cameron Valves
Houstoun road
Livingston, West Lothian
Scotland, EH545BZ
Phone: 441-506-444-000
Fax: 441-506-441-320

Canada
Cooper Cameron Corporation
715-5th Ave. S.W. #600
Calgary, Alberta T2P 2X6
Canada
Phone: 403-261-2800
Fax: 403-262-5181

Mexico
Cooper Cameron de Mexico
S.A. de C.V.
Avenida Homero 1804,
Suite 403
Col. Chapultepec Morales,
11510 Mexico, D.F. Mexico.
Phone: 52-5-580-0296
Fax: 52-5-395-8669

Argentina
Cameron Argentina S.A.I.C.
Av. Antartida Argentina 2711
CC No. 2
2800 Zarate, Pica Buenos Aires
Phone: 54-487-22297
Fax: 54-487-23404

Singapore
Cooper Cameron (Singapore)
Pte. Ltd.
No. 2 Gul Circle
Jurong Industrial Estate
Locked Bag Service No. 3
Jurong Town Post Office
Singapore 2262
Republic of Singapore
Phone: 65-861-3355
Fax: 65-861-6197

France
Cameron France, S.A.
Plaine Sainte-Pierre
CS 620
34535 Beziers Cedex
Beziers, France
Phone: 33-467-111500
Fax: 33-467-111600

Other Locations
Austria
Australia
Brazil
Brunei
Chile
Congo
Egypt
England
Gabon
Germany
Hungary
Indonesia
Ireland
Japan
Malaysia
Netherlands
New Zealand
Nigeria
Norway
Oman
Poland
Qatar
Russia
Saudi Arabia
UAE
Venezuela

COOPER CAMERON VALVES

16500 South Main Street
Missouri City, TX 77489
281 499 8511
800 323 9160
www.ccvalve.com

©Cooper Cameron Corporation, Cooper Cameron Valves Division Printed in USA 1/01 TC1457

Cast steel valves
gate, globe, and check

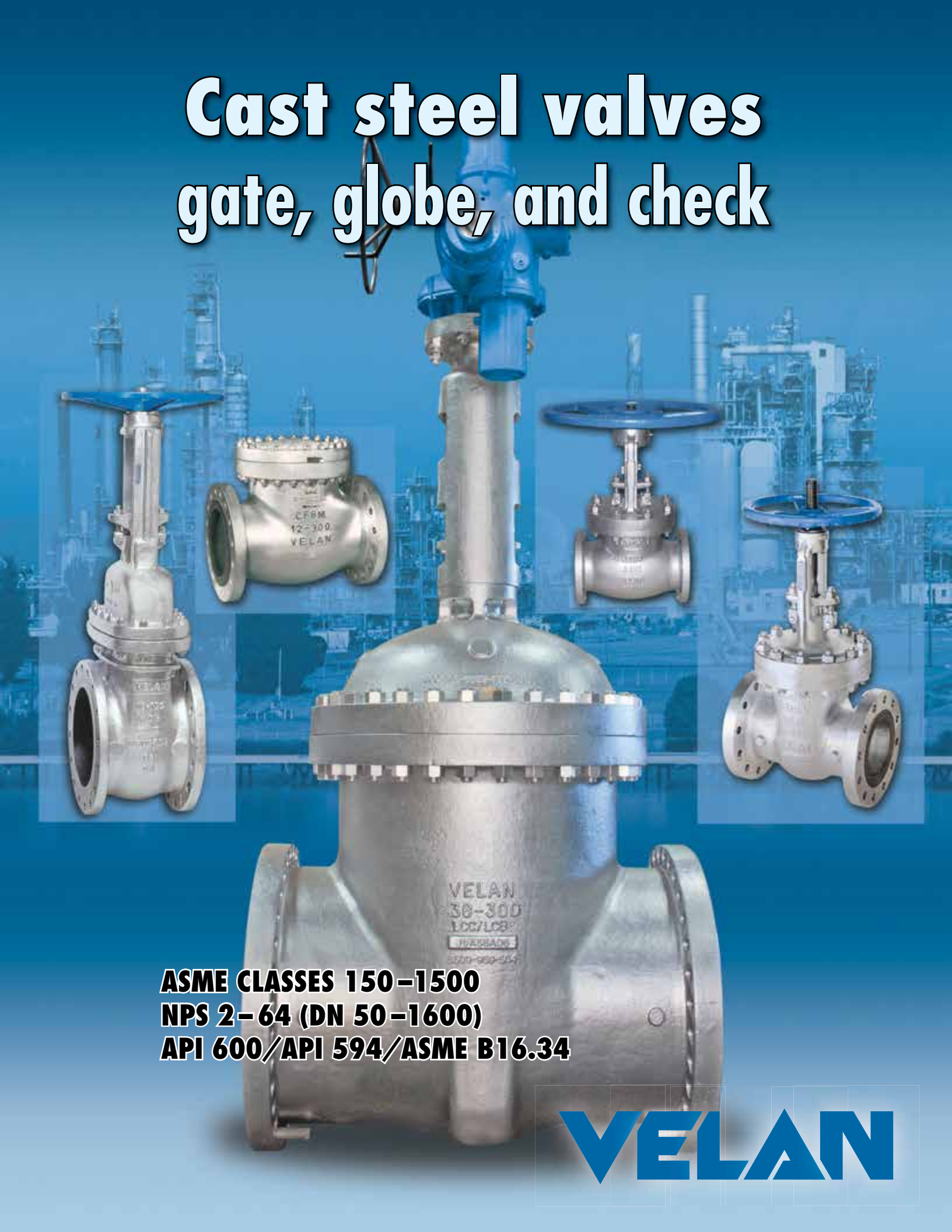

ASME CLASSES 150–1500
NPS 2–64 (DN 50–1600)
API 600/API 594/ASME B16.34

VELAN

VELAN'S PROFILE

VELAN AT A GLANCE

History
- Founded in 1950

Sales
- Over $500 million

People
- Over 2,000 employees

Product line
A world-leading range of valves across all major industrial applications:
- Cast steel gate, globe, check, and ball valves
- Forged steel gate, globe, check, and ball valves
- Triple-offset butterfly valves
- Knife gate valves
- Severe service valves
- Bellows seal valves
- Steam traps

Quality
All major certifications and approvals
- ASME N stamp and NPT for nuclear valves (since 1970)
- ISO 9001 (since 1991)
  Currently certified to ISO 9001:2008
- PED
- GOST (TR and RTN)
- API 6A and API 6D
- TA-Luft
- Quality programs fully compliant with ISO-9001, NCA 4000, ASME NQA-1 and 10 CFR 50 Appendix B, surveyed by ASME and audited by NUPIC, Northrop Grumman Newport News, DCMA, utilities, architect/ engineers, and other organizations from around the world

Headquartered in Montreal, Velan has several international subsidiaries. For general inquiries:

Velan head office:
7007 Côte de Liesse,
Montreal, QC H4T 1G2 Canada

Tel: +1 514 748 7743
Fax: +1 514 748 8635

Check our website for more specific contact information.

www.velan.com



Velan is one of the world's leading manufacturers of industrial steel valves, supplying gate, globe, check, ball, triple-offset butterfly, knife gate, control, and highly engineered severe service valves for critical applications in the chemical, petrochemical, oil and gas, fossil and nuclear power, cogeneration, pulp and paper, mining, marine and cryogenic industries. The company also supplies actuators and integrated control packages.

Founded in 1950, Velan has earned a reputation for product excellence and innovation by bringing to the market superior products with special emphasis on quality, safety, ease of operation, and long service life. Velan valves have an extremely broad installation base and are approved by major companies worldwide.

Velan concentrates on one business—the design, manufacture and marketing of steel valves in a broad range of types and sizes for high performance service in a wide range of applications. The company's talented people are focused on Velan's core values of quality, reliability, innovation, and integrity and mission to be the world's leading valve brand.

© 2013 Velan Inc., Montreal, QC, Canada. All rights reserved. The contents hereof are confidential and proprietary to Velan. Any unauthorized reproduction or disclosure, in whole or in part, is strictly prohibited. Velan reserves the right to change this information without notice. Velan does not accept any liability or damages arising from the use of information in this catalog. Velan Valves, Velan, Memoryseal, Securaseal, Torqseal, Velflex, Adaxie, and RAMA are trademarks or registered trademarks of Velan Inc. and/or another Velan company. Stellite® is a registered trademark of Kennametal Stellite™, a wholly owned subsidiary of Kennametal Inc. All other trademarks and registered trademarks are owned by their respective companies.

TABLE OF CONTENTS

Velan cast steel valves target industries and manufacturing program **4–5**

Total quality and process improvement and systems **6–7**

Production machines **8**

Automatic plasma arc hardfacing and testing **9**

Continuous casting quality improvement and computerized casting process simulation **10**

Design of stem seals and live-loading options **11**

Fugitive emission testing **12–13**

Accessories **14**

Body-bonnet design **15**

Technology of seat-disc tightness and assembly and testing **16–17**

Wedge and seat comparisons **18**

Globe valve conical seat and API 594 swing check valves **19**

Bolted bonnet gate valves **20–21**

Bolted bonnet globe and stop check valves **22–23**

API 594 swing check valves **24–25**

Valves for special service–live-loaded **26**

Valves for special service–hydrofluoric acid **27**

Valves for special service–cryogenic **28**

Valves for special service–block and bleed gate **29**

Bypasses, flanges, weights and Cv flow cofficients **30–31**

Pressure-temperature ratings **32–33**

Specification of cast valve materials **34**

How to order cast steel gate, globe, and check valves **35**

** For gate valves larger than NPS 24 (DN 600), wall thickness is based on B16.34 plus additional wall thickness allowance.*

 Velan reserves the right to change this information without notice. © 2013 Velan Inc. All rights reserved.

VELAN'S GLOBAL NETWORK

Head office



Montreal, Canada
Velan Inc.

- **17 production facilities**
  - **5 plants in North America**
  - **6 plants in Europe**
  - **6 plants in Asia**
- **5 stocking and distribution centers**
- **Hundreds of distributors worldwide**
- **Over 60 service shops worldwide**

Manufacturing plants

North America



Montreal, Canada
Velan Inc., Plant 1 (N)



Montreal, Canada
Velan Inc., Plant 2 and 7 (N)



Granby, Canada
Velan Inc., Plant 4 and 6



Montreal, Canada
Velan Inc., Plant 5



Williston, VT, U.S.A. (N)
Velan Valve Corp., Plant 3

Europe



Lyon, France
Velan S.A.S.



Mennecy, France
Segault S.A.



Leicester, UK
Velan Valves Ltd.



Lisbon, Portugal
Velan Válvulas Industriais, Lda.



Lucca, Italy
Velan ABV S.p.A., Plant 1



Lucca, Italy
Velan ABV S.p.A., Plant 2

Asia



Ansan City, South Korea
Velan Ltd., Plant 1



Ansan City, South Korea
Velan Ltd., Plant 2



Ansan City, South Korea
Velan Ltd., Plant 3



Taichung, Taiwan
Velan Valvac Mfg. Co., Ltd.



Suzhou, China
Velan Valve (Suzhou) Co., Ltd.



Coimbatore, India
Velan Valves India Pvt. Ltd.

Distribution centers



Granby, Canada
Vel*CAN*



Benicia, CA, U.S.A.
Vel*CAL*



Marietta, GA, U.S.A.
Vel*EAST*



Houston, TX, U.S.A.
Vel*TEX*



Willich, Germany
Velan GmbH

(N) – *ASME N-stamp accredited manufacturer*

Velan reserves the right to change this information without notice. © 2013 Velan Inc. All rights reserved.

VELAN CAST STEEL VALVES

FOR PROCESS AND POWER INDUSTRIES

LOW FUGITIVE EMISSIONS

Velan's comprehensive line of cast steel gate, globe, and check valves features leading-edge design, engineering, and manufacturing technology. Our valves meet the most stringent national and international standards for fugitive emissions.

Our gate, globe, and check valves are widely used in many industries including:

- **Process industries:** oil, chemical, petrochemical, refining, pulp and paper, pharmaceutical, and food processing.
- **Power industries:** nuclear, fossil fuel, combined cycle, cogeneration, and district heating.

In addition, our valves are used for ship-building, LNG tanker carriers, offshore platforms, water treatment, mining, and more.

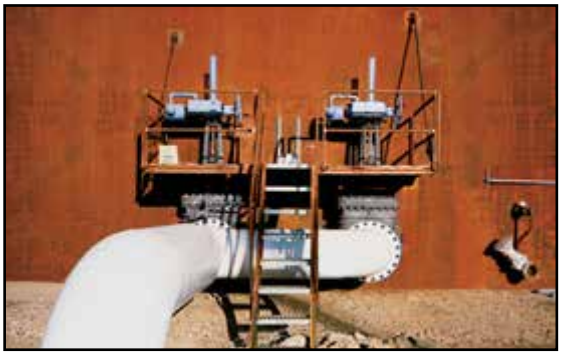

Cast steel valve installation at an oil refinery.



Carbon steel gate valve, ASME Class 600 used for boiler feed water installation at a hydrogen plant in Texas.



A geothermal power plant valve installation for sour gas service.



Gate valves in service for a boiler feed installation.

Velan reserves the right to change this information without notice. © 2013 Velan Inc. All rights reserved.

CAST STEEL VALVES MANUFACTURING PROGRAM

CAST STEEL GATE, GLOBE, AND CHECK VALVES

Valve type	ASME Class	SIZE (NPS/DN)																													
		2	2½	3	4	6	8	10	12	14	16	18	20	24	26	28	30	32	34	36	38	40	42	44	46	48	50	54	56	60	64
		50	65	80	100	150	200	250	300	350	400	450	500	600	650	700	750	800	850	900	950	1000	1050	1100	1150	1200	1250	1350	1400	1500	1600
GATE	150	✓	✓	✓	✓	✓	✓	✓	✓	✓	✓	✓	✓	✓	✓	✓	✓	✓	✓	✓	✓	✓	✓		✓	✓	✓	✓	✓	✓	✓
	300	✓	✓	✓	✓	✓	✓	✓	✓	✓	✓	✓	✓	✓	✓	✓	✓	✓	✓	✓		✓	✓								
	600	✓	✓	✓	✓	✓	✓	✓	✓	✓	✓	✓	✓	✓	✓	✓	✓	✓	✓	✓	✓	✓		✓			✓				
	900	✓		✓	✓	✓	✓	✓	✓	✓	✓																				
	1500	✓		✓	✓	✓	✓	✓																							
GLOBE	150	✓	✓	✓	✓	✓	✓	✓	✓	✓	✓	✓		✓																	
	300	✓	✓	✓	✓	✓	✓	✓	✓	✓	✓	✓		✓																	
	600	✓	✓	✓	✓	✓	✓	✓	✓																						
	900	✓		✓	✓	✓	✓																								
	1500	✓		✓																											
CHECK	150	✓	✓	✓	✓	✓	✓	✓	✓	✓	✓	✓	✓	✓	✓	✓	✓	✓		✓	✓		✓			✓					
	300	✓	✓	✓	✓	✓	✓	✓	✓	✓	✓	✓	✓	✓		✓			✓				✓								
	600	✓	✓	✓	✓	✓	✓	✓	✓	✓	✓	✓	✓	✓	✓																
	900	✓		✓	✓	✓	✓	✓					✓					✓			✓										
	1500	✓		✓	✓	✓	✓	✓																							

GASKET MATERIALS

VALVE TYPE	MATERIAL
Gate	Class 150: corrugated steel/graphite except NPS 2–2½ (DN 50–65) spiral wound Class 300–1500: spiral wound stainless steel and graphite
Globe	Spiral wound stainless steel and graphite
Check	Spiral wound stainless steel and graphite

NOTE:

CoCr alloy as used throughout this catalog refers to cobalt chrome hardfacing alloys as supplied by Kennametal Stellite, and other approved manufacturers.

OPTIONAL BODY MATERIALS

ASTM SPEC. GRADE	NOMINAL DESIGNATION	MIN. TEMP		MAX. TEMP.		VELAN CODE
		°F	°C	°F	°C	
A216-WCB	Carbon steel	-20	-29	800	427	02
A217-WC6	1¼ Cr–½ Mo	-20	-29	1,100(1)	593	05
A217-WC9	2¼ Cr–1Mo	-20	-29	1,100(1)	593	06
A217-C5	5Cr–½ Mo	-20	-29	1,200(1)	649	04
A217-C12	9Cr–1Mo	-20	-29	1,200(1)	649	09
A352-LCB	Carbon steel	-50	-46	650	343	25
A352-LCC	Carbon steel	-50	-46	700	371	31
A352-LC2	2½ Ni	-100	-73	650	343	39
A351-CF8M	18Cr–9Ni–2Mo	-425	-254	1,500(1)	816(1)	13
A351-CF3M	18Cr–9Ni–2Mo	-425	-254	850	454	14

(1) Flanged end ratings terminate at 1,000°F (538°C) for Class 150.

Velan reserves the right to change this information without notice. © 2013 Velan Inc. All rights reserved.

TOTAL QUALITY AND PROCESS IMPROVEMENT

VELAN

Total Quality Commitment

Velan Total Quality Program

Our aim is to offer products and services that not only meet but clearly exceed the expectations of our customers.

Through training, teamwork, and performance, our employees strive to achieve continuous improvement of all processes.

Our goal is total quality and on-time delivery; our method is total commitment.



A.K. Velan,
Founder of Velan

Velan's number-one priority is quality. From order entry to design engineering, the entire company is totally committed to offering top quality products and services that not only meet but exceed customer expectations. All Velan valves are designed and manufactured with an emphasis on low emissions, safety, simple maintenance, ease of operation, and, above all, long and reliable service life.

TOTAL PROCESS IMPROVEMENT

While Velan has always made quality a priority, in 1990the company adopted a formal Total Quality Management Program, aimed at improving production processes. The company was awarded ISO 9001 status the following year.

Today, Velan's Total Process Improvement Program brings together a group of industry best practices, including Lean Manufacturing and Six-Sigma, with the goal of creating a more balanced and efficient production system.

CERTIFICATES/APPROVALS

Velan holds all major applicable approvals, including ISO 9001:2008, PED, ASME N/NPT, TÜV, and TA-Luft. Velan's comprehensive quality program is fully compliant with the most stringent industry standards and has been surveyed and audited by leading organizations, regulatory bodies, utilities, and architect/engineers from around the world.



TOTAL PROCESS IMPROVEMENT PROGRAM

- Total Quality Management Program (TQM) (since 1990)
- Lean manufacturing
- Six-Sigma

CERTIFICATIONS/APPROVALS

- ISO 9001 (since 1991); Currently certified to ISO 9001:2008
- PED
- ASME N and NPT (since 1970)
- AD2000-Merkblatt HP 0 and A4/TRD 110
- TA-Luft
- Designed and tested to B16.34
- QA program fully compliant with NCA 4000, ASME NQA-1, and 10 CFR 50 Appendix B
- Quality programs surveyed by ASME and audited by NUPIC, Northrop Grumman Newport News, DCMA, utilities, architect/engineers, and other organizations from around the world

Velan reserves the right to change this information without notice. © 2013 Velan Inc. All rights reserved.

6 SYSTEMS ENSURE THE FINAL QUALITY GOALS

1. DESIGN

All valves are designed to comply with the requirements of ASME B16.34, the ASME code, and special customer requirements, as applicable.

2. QUALITY ASSURANCE

Every step from procurement through production, welding, assembly, testing, and packaging is in accordance with written quality programs and procedures. (An ASME Section III manual for code valve production and an ISO 9001 QA manual for all other production.) Velan's five North American plants are certified to IS0 9001 and three plants have ASME N type certificates of authorization. Velan has been fully approved to supply CE marked valves in accordance with the PED (European Pressure Equipment Directive). Orders are reviewed by the Engineering and QA departments and all special customer requirements are incorporated into QCI (Quality Control Instructions) issued for each project. The QA Department also maintains calibration and gauge-control systems, and trains and qualifies skilled welders and NDT inspectors.

3. QUALITY CONTROL

The QC Department is responsible for all aspects of quality, from receiving of material to control of machining processes, welding, nondestructive examination, assembly, pressure testing, cleaning, painting, and packaging. When required, a permanent record of all completed quality goals is prepared and sent to customers in the form of a "Valve Data Package."



TQM innovations at Plant 2 include "snag lists" of any problems encountered in daily engineering and manufacturing processes. The lists are compiled weekly and automatically become the first items on the agenda for TQM team meetings.

4. PRESSURE TESTING

Each valve is pressure tested in accordance with ASME B16.34, API 598, or special customer requirements as applicable. In all plants test status is integrated into production control/inventory management software.



An operator on a CNC horizontal boring mill monitors his own quality.

5. IMPROVEMENT TEAMS

Continuous improvement teams at point of manufacturing ensure quality at source, process control, higher quality workmanship, and operator ownership.

6. QUALIFICATION TESTING

A key to reliability is the performance of functional qualification tests. These tests are performed on all valves to determine reliability and service life. 1,000 cold and 1,000 thermal cycles with 1,000°F (555.6°C) superheated steam and five blowdowns with "0" leakage.

Velan reserves the right to change this information without notice. © 2013 Velan Inc. All rights reserved.

MASS PRODUCTION
OF CAST STEEL VALVES





Automatic bonnet machine.





Fully automated precision machining.



Automatic multiple drilling machine.



Automatic three-way facing machine.

Velan reserves the right to change this information without notice. © 2013 Velan Inc. All rights reserved.

AUTOMATIC PLASMA ARC HARDFACING
FOR SEATS AND DISCS



Automatic plasma arc hardfacing equipment of a wedge using a robotic arm.

High-quality deposits of hardfacing materials including cobalt-chrome (CoCr) Alloys such as Stellite®, Stoody® and Wallex®, as well as other hardfacing materials are assured by the use of state-of-the-art technology regarding controlled pre- and post-heating, automatic plasma arc hardfacing equipment and controlled cooling processes.



Automatic plasma arc hardfacing equipment for seats.

RELIABILITY THROUGH TESTING

All valves are tested during production for reliability with pressurized air and hydrotested for bubble-free tightness in accordance with API 598 specifications.



Semi-automatic stations for testing NPS 2–12 (DN 50–300) valves to API 598.



Above: Operational test for electric actuators.



Right: TA-Luft qualification test on a NPS 4 (DN 100) Class 600 gate valve with live-loading. The test medium is helium at 1500 psi (100 bar).

Velan reserves the right to change this information without notice. © 2013 Velan Inc. All rights reserved.

CONTINUOUS CASTING QUALITY IMPROVEMENT

AND COMPUTERIZED CASTING PROCESS SIMULATION

Velan's VEL-QCI-955 Program (API 600)

The **Velan VEL-QCI-955 Program** was implemented to set the quality control standards for pressure boundary castings, and to ensure a consistent supply of quality castings to Velan's customers.

1. Radiographic Sample (pattern) Approval Process.
2. Radiographic Monitoring Program.
3. Casting Monitoring Program.

Sample castings

Before castings are released for production, the Velan Level III NDE inspector evaluates and approves the submitted radiographic films (100% coverage) as per the B16.34 acceptance standard.

Radiographic monitoring

Random radiographic monitoring requires that castings be taken every six months from each foundry, randomly by size and quantity sets, and radiographed per the B16.34 requirement.



3-D solid model of casting imported into MAGMASOFT® simulation program.

If sample castings fail to meet the radiographic requirements of B16.34, Velan's Quality Assurance department will issue a corrective action request to the foundry.

Casting monitoring

Castings rejected due to defects such as shrinkage, porosity, and inclusions discovered by radiography, hydrostatic tests, or machining are recorded as part of the statistical control of each vendor.

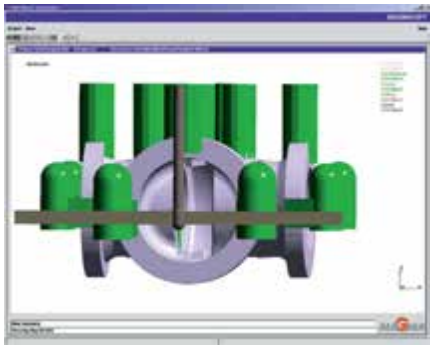

Risering and gating simulation on a NPS 30 (DN 750) Class 600 gate valve body.

3-D solidification simulation

Velan works with foundries that use computer-based casting simulation programs such as MAGMASOFT® to optimize casting design and manufacturing methods before and during the production process.

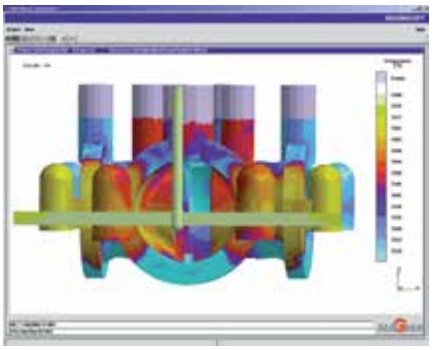

90% filling simulation on a NPS 30 (DN 750) Class 600 gate valve body.

Working together with foundries we continue to improve the integrity of castings so we can supply the highest quality products.

An example of the successful cooperation between our Engineering department and the foundry using the MAGMASOFT® simulation for a NPS 30 (DN 750) Class 600 gate body is shown on this page.

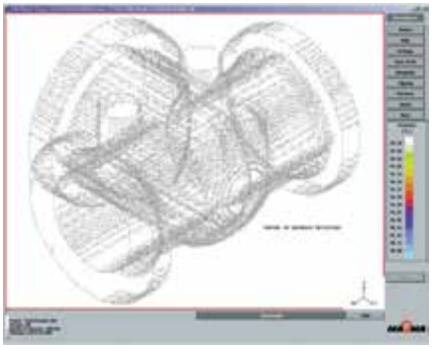

No shrinkage on a NPS 30 (DN 750) Class 600 gate valve body simulation.

BENEFITS TO VELAN'S CUSTOMERS AND TO THE FOUNDRIES

- Shorter delivery time.
- Higher quality commercial castings.
- Faster optimization of the methoding system.
- Improved internal integrity of castings at pattern approval.
- Optimized metal flow and solidification pattern.
- Improved prediction of internal defects.
- Reduced scrap.
- Optimized casting design.
- Reduced shrinkage and porosity.
- Reduced NDE (radiographic) upgrading.

Velan reserves the right to change this information without notice. © 2013 Velan Inc. All rights reserved.

DESIGN OF STEM SEALS

Velan offers standard cast steel bolted bonnet gate and globe valves that are qualification tested for compliance with EPA fugitive emissions regulations as well as ISO 15848 and API 622 standards

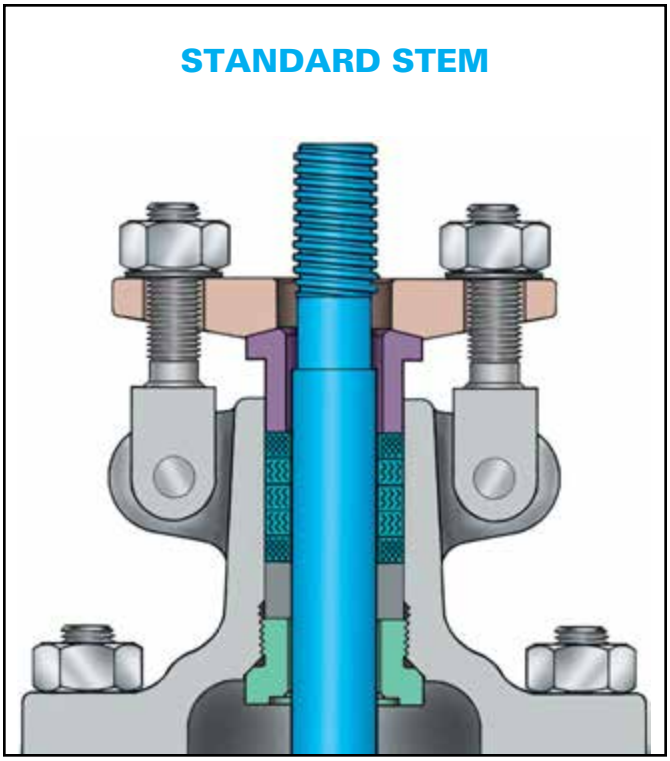

The Velan stem seal evolved from these test findings:

- **Ensures leakage of less than 100 ppm** as demonstrated through extensive laboratory testing.
- **Large loads.** Sealing is achieved by consolidation using high density individually die formed (precompressed) packing rings or by cycling and re-torquing. This results in a high compression load and packing forms a mass of low porosity and permeability (4,000 psi for graphite).
- **Small clearances between vital parts.**
- **Precision stem and packing chambers.** Straightness, roundness, and fine finish of the stem and packing chamber wall are essential.
- **Short and narrow packing chambers improve sealing.** Maximum of six rings in a single set chamber.
- **Stem and packing chamber walls.** Close roundness, straightness and superior burnished surface finish of typically 6–8 RMS for the stem and 63 RMS or better for the packing chamber.

LIVE-LOADING OPTIONS

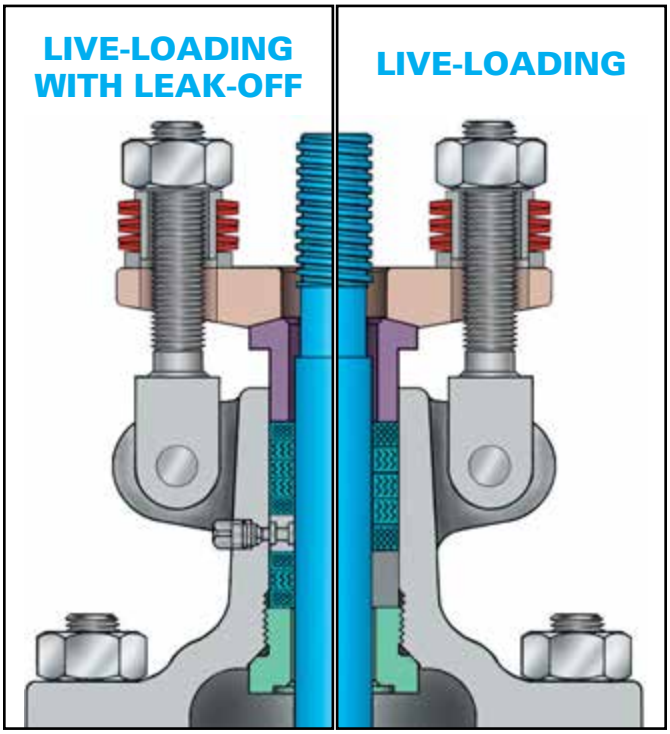

- **Live-loading.** Two sets of belleville springs maintain a permanent packing stress of 3,500 – 4,000 psi. Live-loading extends the low emission service life especially in service with large pressure/ temperature transients or frequent cycling.
- **Leak-off.** For critical service, a lantern ring and double packing can be provided with a leak-off connection. The leak-off is provided to allow collection of leakage from the lower packing set.
- **Rings individually compressed in packing chamber** to 3,500 tp 4,000 psi for graphite and 2,000 psi PTFE to ensure equal stress distribution and effectiveness of all rings.
- Velan has extensive experience in valve live-loading. The original live-loading concept was developed by Velan in 1972 in a research project for AECL to eliminate leakage in nuclear service. Velan has been supplying live-loaded valves for Nuclear and non-nuclear service for over 40 years.

Velan reserves the right to change this information without notice. © 2013 Velan Inc. All rights reserved.

FUGITIVE EMISSION TESTING

WHY FUGITIVE EMISSION (FE) TESTING IS SO IMPORTANT:

- In a typical petroleum plant, 60% of fugitive emissions are from valves. Therefore it is extremely important to reduce valve emissions to the greatest degree possible.
- Four widely recognized standards regarding valve fugitive emissions are ISO 15848-1, ISO 15848-2, API 622, and API 624.
- Velan offers standard cast steel bolted bonnet gate and globe valves qualification tested for compliance with ISO, API and EPA fugitive emission requirements.
- The primary intention of API 622 compares performance of different packing brands.
- Different packing arrangements are available upon request.

ISO 15848-1 type test and ISO 15848-2 production tests	API standard 622 FE test in a test fixture	API standard 624 FE test in a valve
• Introduced in 2006. • Velan has tested our standard packing set to ISO 15848-1 and re-validated our FE certification. • Uses the "global" test method. • ISO 15848-1 test is carried out with a standard valve and additional bonnet enclosure.	• Introduced in 2006. • Velan has tested our standard packing set to API 622 and re-validated our FE certification. • Uses the "sniffing / flushing" test method (local method). • API 622 test is carried out in a test fixture designed to simulate a valve.	• Introduced in 2011 • Intended for fugitive emissions valves • Uses sniffing as a test method • Testing is carried out using assembled valves

REQUIREMENTS	ISO 15848-1	API 622	API 624
Type test set-up	Valve	Test fixture	Valve
Measurement method	Global (volumetric)	Local (sniffing/flushing)	Local (sniffing)
Units[1]	$mg \cdot s^{-1} \cdot m^{-1}$	ppmv	ppmv
Test pressure[2]	Cold working pressure @ ambient or reduced at high temperature	Between zero and 600 psi	ASME B16.34 pressure rating, ambient and at temperature or 600 psi whichever is lower
Test gas	Helium (methane allowed)	Methane	Methane (He allowed)
Thermal cycles	Minimum 2	5	3
Mechanical cycles	Minimum 500	1,510	310
Packing adjustment	One time	One time above 500 ppmv	Not permitted
Qualification class	Class A: Typically bellows seal Class B: Typically PTFE packing Class C: Typically expanded graphite	Not available	Not available
Extension of test validation	50% – 200% stem diameter (similar sealing arrangement)	Not available	NPS 4, 6 , & 12 (DN 100, 150, & 300): Class 300[3] NPS 4 (DN 100): Class 1500 [4] NPS 4 (DN 100): Class 2500 [5]
Production test	ISO 15848-2	Not specified	Not specified

(1) No correlation between mg/second and ppmv.

(2) The test pressure shall be in accordance with the temperature rating for the test valve per ASME B16.34 for the applicable body material and pressure class or 600 psig, whichever is lower.

(3) NPS 4, 6, & 12 (DN 100, 150, and 300): Class 300 qualifies Classes 150–600

(4) NPS 4 (DN 100): Class 1500 qualifies Classes 900 and 1500

(5) NPS 4 (DN 100): Class 2500 qualifies only Class 2500

Velan reserves the right to change this information without notice. © 2013 Velan Inc. All rights reserved.

FUGITIVE EMISSION TESTING

VELAN ISO 15848-1 RESEARCH AND DEVELOPMENT TEST LAB

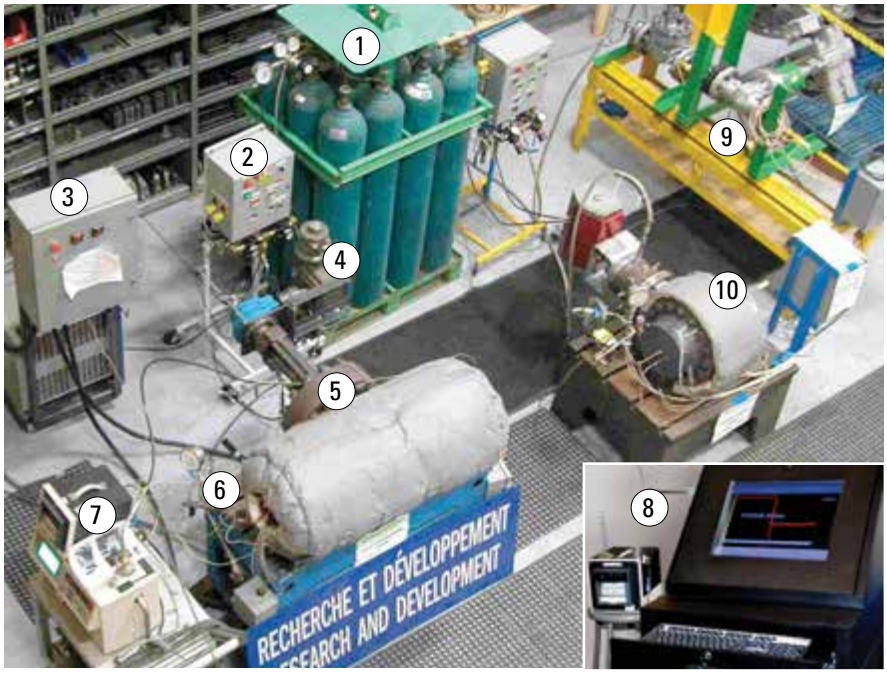

1	Helium source (pressurized cluster bottles)
2	Valve actuator control box
3	Heating system control box
4	Valve actuator
5	Qualification valve NPS 8 (DN 200) Class 600 API 600 cast steel gate
6	Heating elements
7	Mass spectrometer
8	Data acquisition system
9	Qualification valve NPS 3 (DN 80) Class 600 API 600 cast steel gate
10	Qualification valve NPS 10 (DN 250) Class 300 Torqseal®

THIRD PARTY FUGITIVE EMISSIONS TESTING OF VELAN VALVES



A global measurement technique used by ISO 15848-1 provides highest sensitivity to leakage.



ISO 15848-1
Fugitive Emission Test Report
With Methane

Performed for

Velan Inc.
7007 Cote de Liesse
Montreal, QC, Canada H4T 1G2
www.velan.com

3 inch Class 300 Gate Valve
Product Code: F10-1064C-02TY
Project Number: 207115
January 2008

Performed by

YARMOUTH RESEARCH AND TECHNOLOGY

92 East Elm Street
Yarmouth, ME 04096 USA
(207) 829-5359

API Standard 622 Test Report
"Type Testing of Process Valve Packing for Fugitive Emissions"
August 2006

Performed for

Velan Inc.
7007 Cote de Liesse
Montreal, QC, Canada H4T 1G2
www.velan.com

4 inch Class 300 Gate Valve
With OEM Packing

Project Number: 207114A
January 2008

Performed by

YARMOUTH RESEARCH AND TECHNOLOGY

92 East Elm Street
Yarmouth, ME 04096 USA
(207) 829-5359



Local measurement (sniffing) used by API 624 technique pressurizes the valve with gas while checking for leakage with a detector probe.

Velan reserves the right to change this information without notice. © 2013 Velan Inc. All rights reserved.

ACCESSORIES

GEAR, ELECTRIC, AND CYLINDER ACTUATORS

GEAR ACTUATORS



Gearing is generally applied to valves to make operation easier. The gearing may be, of the spur, bevel, or worm type—any of which may be applied to Velan valves.

The gears and gear brackets may be either cast iron or cast steel and may have cast or cut teeth, depending on the loads and the application. Gearing is too often neglected when valve operation is considered, resulting in unsatisfactory operation that requires expensive changes.

TYPE	Size	OPTIONAL		STANDARD	
	ASME CLASS	NPS	DN	NPS	DN
GATE	150	6–24	150–600	30–60	750–1500
	300	6–16	150–400	18–36	450–900
	600	4–12	100–300	14–36	350–900
	900	3–6	80–150	8–10	200–250
	1500	3–4	80–100	6–10	150–250
GLOBE	150	6–12	150–300	14–16	350–400
	300	6–12	150–300	14–16	350–400
	600	4–10	100–250	—	—
	900	2–4	50–100	—	—
	1500	2–4	50–100	—	—

ELECTRIC ACTUATORS



Motorized controls may be applied to valves of almost any size for operation in practically any position or location.

All units, whether installed directly on a valve or on a floor stand, can be manually operated in case of power failure. The units are available for either alternating or direct current.

Motor units supplied by Velan are the high-torque type with windings impregnated to resist both oil and moisture. They are completely weather-proof, explosion-proof (optional), and dust and steam tight. Various sizes and styles are available for different applications, and systems and can be varied to fit special requirements.

CYLINDER ACTUATORS



The most commonly used cylinders are actuated by air, but oil and water types are also available if required. In all designs, the valve stem normally serves as a piston rod with the disc fastened directly to it. Tail rods are also supplied as standard equipment to serve as position indicators and for emergency opening. Handwheels and gear heads can be mounted on top of cylinders for operation in an emergency, which may arise due to the loss of operating medium in the cylinder.

Velan cylinders can be furnished with mounting pads for one of the commercial cylinders or valve positioners that provide throttling control. High-pressure cylinders are also available for specific applications.

VALVE ACTUATOR SIZING

The Velan philosophy for selecting an actuator is to calculate the required thrust and torque to operate the valve at the required service conditions. A reasonable margin of excess actuator capability over that required is always allowed for in the final actuator selection, but grossly oversized actuators are avoided.

Because of the wide variations in system operating conditions, actuator sizing is based on the following:

ACTUATOR TYPE	LINE PRESSURE	DIFFERENTIAL PRESSURE (CLOSED)	POWER SUPPLY
ELECTRIC	Specified by customer	Specified by customer	Voltage, type, phase, specified by customer
PNEUMATIC	Specified by customer	Specified by customer	Air pressure specified by customer
HYDRAULIC	Specified by customer	Specified by customer	Hydraulic pressure specified by customer
HANDWHEEL/ GEAR ACTUATED	70% of CWP(1) unless otherwise advised by customer	70% of CWP(1) unless otherwise advised by customer	200 lb. rimpull(2) unless otherwise advised by customer

(1) CWP = cold working pressure per ASME B16.34 at 100°F (e.g., Class 150, CWP = 285 psig, 70% of CWP = 200 psig).

(2) Rimpull is defined as the total tangential force acting on the handwheel (e.g., 200 lb rimpull requires 100 lb force per hand). This rimpull figure is given for closing/opening conditions. For running conditions (travel from open to closed or vice versa), the rimpull is considerably less. For details, contact the company.

OTHER ACCESSORIES

CHAIN WHEELS

Chain wheels are available for all types of Velan cast steel valves. They may be substituted for a plain handwheel or may be used in addition to the existing handwheel.

FLOOR STANDS

Floor stands are available in a number of sizes, and the size to be used depends on the stem size and stem load of the valve.

Velan reserves the right to change this information without notice. © 2013 Velan Inc. All rights reserved.

BODY-BONNET DESIGN

BODY-BONNET GASKET DESIGN
GATE VALVES WITH OVAL FLANGES





Standard corrugated steel gaskets without graphite as specified in API 600 were found to be an unacceptable choice for low emission service, even under ideal laboratory test conditions, and regardless of the flange finish and gasket load. After testing several alternative gaskets, we selected the best performing gasket in our tests—a corrugated steel gasket with graphite-filled channels.

TYPICAL TEST RESULT

3,700 cycles with zero ppm for NPS 6 (DN 150) Class 150

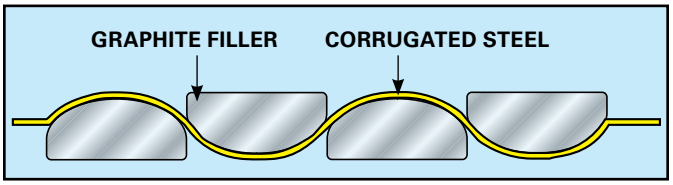

DESIGN FEATURES

- **Ensures leakage of no more than 20 ppm** as demonstrated through extensive laboratory testing.
- **Requires no retorquing** after long cycling.
- **Effective under wide fluctuations** of temperature and pressure.
- **Insensitive to flange finish.**
- **Steel walls of graphite channels** provide additional protection from oxidation, corrosion, and blow-out.
- **Seal offers the advantage of flexible graphite** (0 –14pH, -328°F to +2,000°F).
- **Lower bolt torques.**
- **Modern torquing methods.**

API 600 CAST STEEL VALVES WITH ROUND BODY-BONNET FLANGES



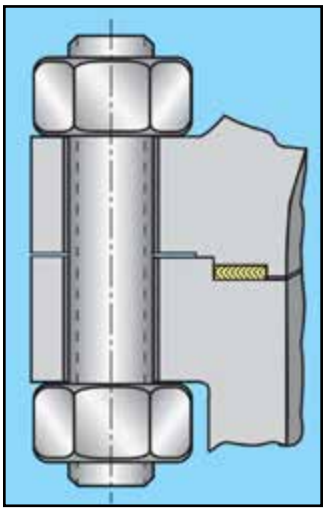

FULLY-ENCASED SPIRAL WOUND 316 OR 347 SS/GRAPHITE BODY-BONNET GASKET

Gate	Class 150:	NPS 2–2½ (DN 50–65)
	Class 300–1500:	NPS 2–36 (DN 50–900)
Globe	Class 150–600:	NPS 2–16 (DN 50–400)
Check	Class 150–1500:	NPS 2–36 (DN 50–900)

DESIGN FEATURES

- **Full enclosure** to allow gasket to retain positive radial support during loading.
- **Ensures leakage of no more than 20 ppm** as demonstrated through extensive laboratory testing.
- **Accurate control of compression** through close tolerance of gasket groove and allowance for radial expansion.
- **No radial machine marks.**
- **Close tolerance** (± 0.005" or 0.13 mm) for gasket thickness.
- **Regular testing of gasket resiliency** and inspection at receiving due to sensitivity to inconsistent quality.
- **Modern torquing methods.**

TYPICAL TEST RESULT

3,100 cycles with zero ppm for NPS 10 (DN 250) Class 300

Velan reserves the right to change this information without notice. © 2013 Velan Inc. All rights reserved.

TECHNOLOGY OF SEAT-DISC TIGHTNESS

The initial seat tightness of valves which can be proven by hydro-testing, has little effect on extended long-term tightness.

SEAT-DISC CONTACT MECHANICS

- When magnified, even a ground, lapped surface appears irregular and rough.
- The rate of leakage is a function of the smoothness and finish of the surfaces.
- The seat-disc (wedge) contacts are on the peaks.
- For absolutely leak-tight joints, the peaks must be deformed with torque until a large portion of mating surfaces is in microscopic contact.
- The compression stress is approximately three times the yield (for 70,000 psi–210,000 psi).
- Sufficient contact pressure generated by the torque is essential. A small increase in contact pressure produces a rapid decrease in leakage.
- The valve seat should be either very narrow or very wide, depending on the valve type.

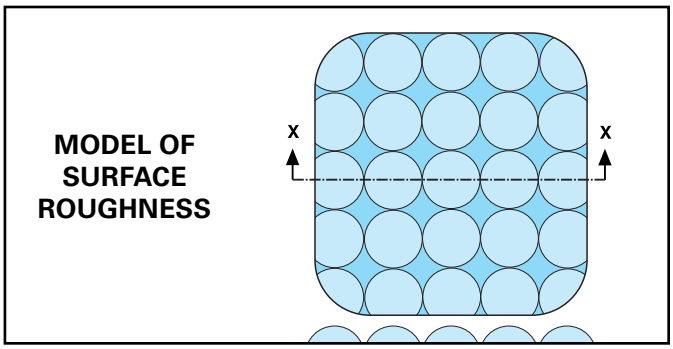

Globe valves	Conical seat-line contact
Gate and API 594 swing check valves	Large, flat-faced seats

VELAN API 600 GATE VALVE SEAT TIGHTNESS

GATE VALVE SEAT TIGHTNESS

- Welded-in CoCr alloy faced seats and a flexible wedge in 13Cr, SS 316, Monel, or hardfaced with CoCr alloy.
- Seating faces ground and lapped to 2 RMS.

Factory acceptance standard for gate valve seat leakage

Size		Multiplier K		
			API 598 – 2009	
NPS	DN	Velan standard	Low pressure test	High pressure test
≤ 2	≤ 50	0	0	0
2½–12	65-300	0	4	2
14 ≥	350 ≥	2	4	2

Allowable leakage = (K) x (NPS)

Bubbles/min. for low-pressure test
Drops/min. for high-pressure test

8 IMPORTANT STEPS IN ASSEMBLY AND TESTING

MAKE THE DIFFERENCE IN SEAT TIGHTNESS AND PERFORMANCE

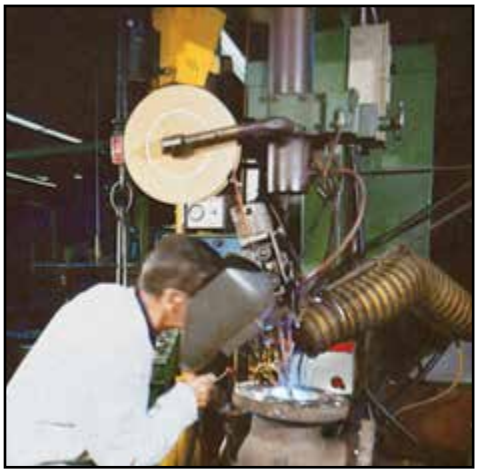

1 Automatic seal welding of CoCr alloy hardfaced seats.



2 Air-under-water test of the seat's welds.

Velan reserves the right to change this information without notice. © 2013 Velan Inc. All rights reserved.



3 Relapping of seating faces after seal welding.

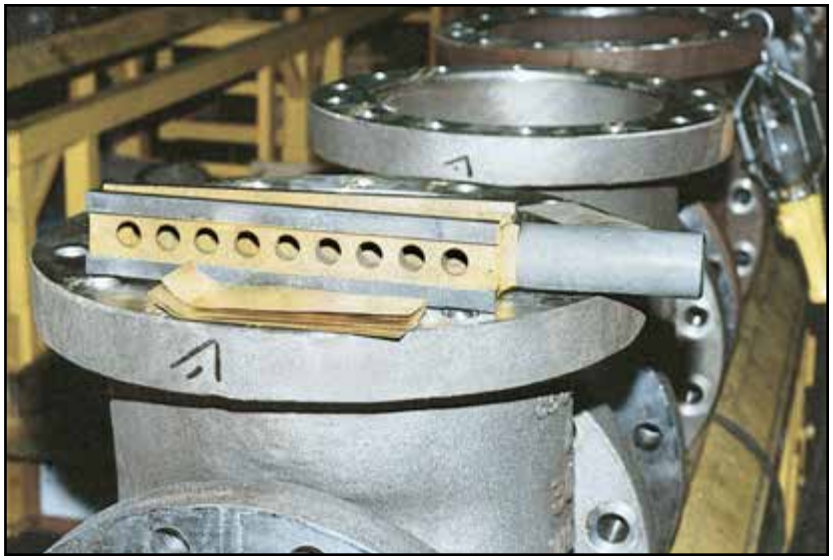

4 Determination of final seat/seat angle with gauge and shims to determine ideal wedge angle (NPS 6–60 (DN 150–1,500)).



5 Precision grinding of individually fit wedge seating surfaces.



6 Lapping of wedge seating surfaces.



7 Assigning the ideally fitted wedge, ground and lapped, to its proper valve body.



8 After assembly, pressure testing of shell, seats, packing, and backseat to API 598.

Velan reserves the right to change this information without notice. © 2013 Velan Inc. All rights reserved.

VELAN API 600 GATE VALVES

FLEXIBLE WEDGE VERSUS SOLID WEDGE





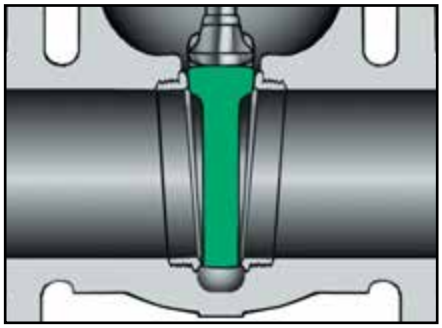

Flexible round wedge pioneered by Velan

- Universal use for temperatures up to 1,000°F (538°C).
- Flexibility compensates for seat face distortion.
- Compensates for deformation of body due to pipe stresses.
- Long cycle life.
- Ideal for processes with large temperature fluctuations.
- Assures valve tightness on both seats over wide range of pressures.
- Stem-to-wedge connection is inside the seating faces supporting the wedge ears during opening. More robust with less mass.

Classical solid wedge on competitive designs

- Wedge may cause severe jamming at temperatures over 200°F (93°C).
- Suitable for small valves NPS ½ –2, (DN 15–50).
- Wedge will stick when valve is closed hot and allowed to cool.
- No compensation for deformation of body due to pressure-temperature or pipe stresses.
- Difficult to make valve tight on both seats due to seat face distortion.

SEAL WELDED SEATS VERSUS SCREWED-IN SEATS

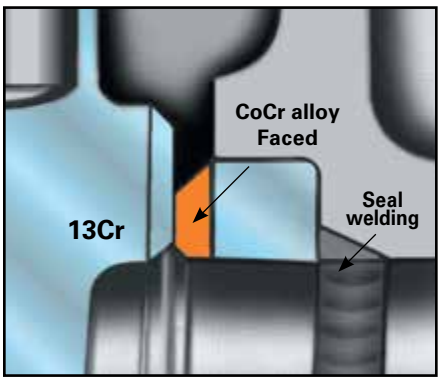

Velan standard ground and lapped seal welded seat rings faced with CoCr alloy

- Pioneered by Velan and considered state-of-the-art technology.
- Welded-in leakproof.
- Weld quality 100% tested.
- CoCr alloy seating faces for long service life.
- Ground and lapped to 2 RMS finish after weld-in.
- Standardized use for steam up to 1,000°F (538°C), oil and gas.
- CoCr alloy face will wear less than the 13Cr wedge, which can easily be repaired or replaced.

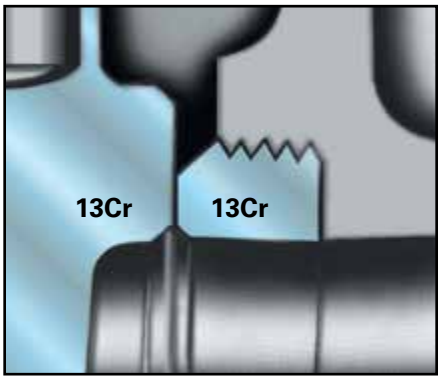

Competing screwed-in seats in 13Cr

- Can loosen up due to corrosion and cause substantial leakage.
- Replacement is difficult if not impossible.
- Threads can corrode and cause leakage.
- Seat is unsecured from unscrewing.
- Seat can become loose due to temperature fluctuations, corrosion, or vibration, and can leak.
- Not suitable for steam service. Steam and other fluids will wear draw body threads of loose seats beyond repair.
- 13Cr seat suitable only for certain fluids.

Velan reserves the right to change this information without notice. © 2013 Velan Inc. All rights reserved.

VELAN GLOBE VALVES CONICAL SEATS

- Line contact seal.
- Contact pressure increased by 1.5 to 5 times with same stems and yokes.

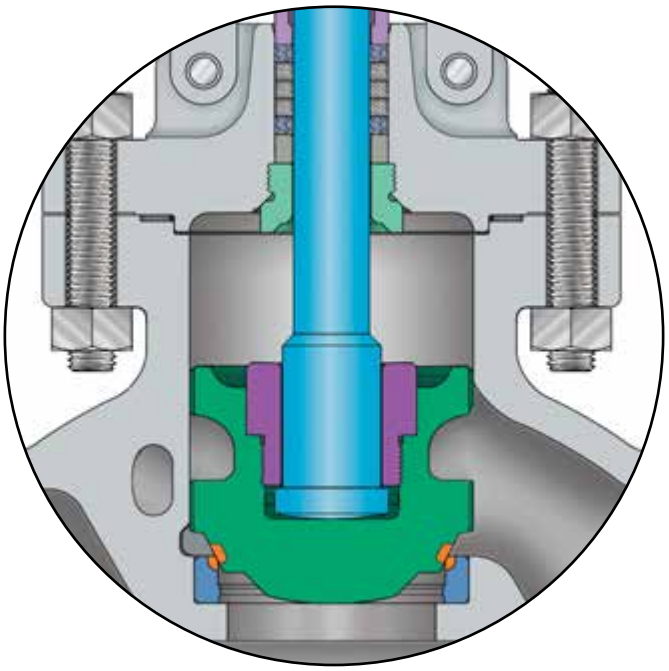

- Seat has good elasticity.
- Low closing torques.
- Ideal for high pressure-temperature.

VELAN API 594 SWING CHECK VALVES

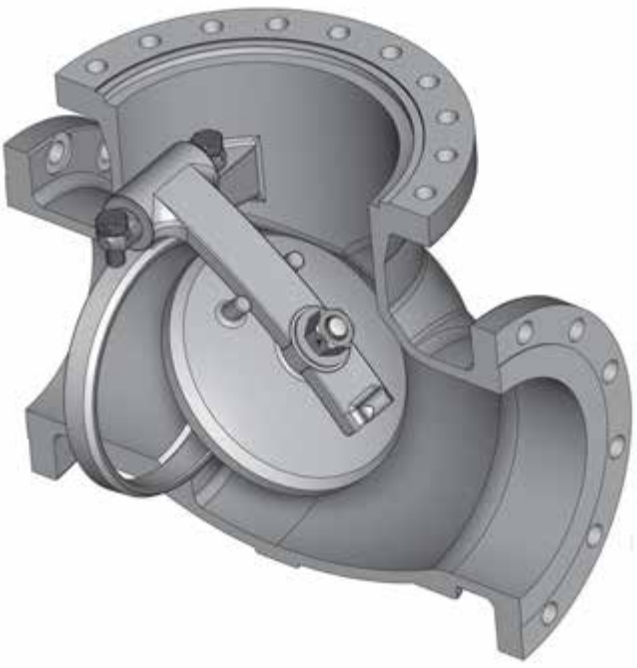

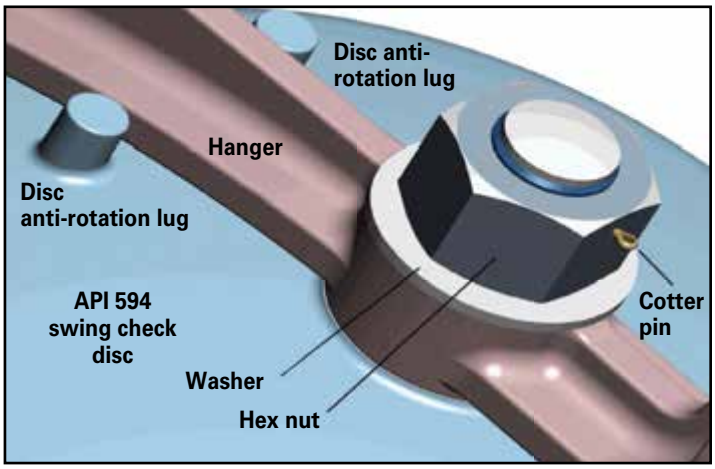

API 594 swing check disc assembly detail

- Cage unit design with no penetration of body prevents:
  a) Possibility of leakage with gasketed or packed hinge pin.
  b) Possibility of pin ejection.
- All parts are accessible from the top for easy servicing.
- Welded-in seat faced with CoCr alloy.
- Non-rotating disc.
- Ground and lapped seating surfaces.

** CoCr alloy as used throughout this catalog refers to cobalt chrome hardfacing alloys as supplied by Kennametal Stellite, and other approved manufacturers.*

Velan reserves the right to change this information without notice. © 2013 Velan Inc. All rights reserved.

VELAN CAST STEEL API 600 GATE VALVES

BOLTED BONNET CAST CARBON, STAINLESS OR ALLOY STEEL

NPS 2–64 (DN 50–1600), ASME CLASSES: 150– 1500

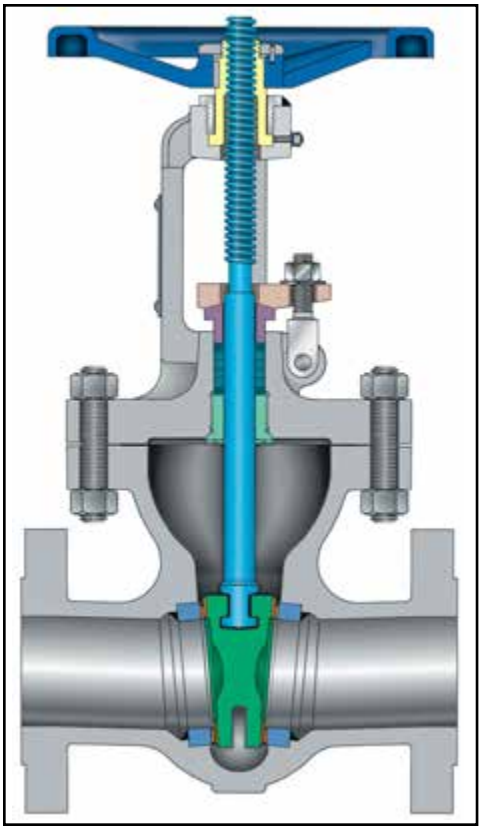

ASME CLASS	FIGURE NUMBER
150	0064C
300	1064C
600	2064C
900	7064C
1500	3064C

STANDARD MATERIALS

PART	MATERIALS			
Body(1)	WCB	WC6	WC9	CF8M
Bonnet(1)	WCB	WC6	WC9	CF8M
Stem(1)(3)	SS 410			SS 630, 600 or SS 316
Wedge(1)	CA 15 or 13Cr faced WCB	CA 15 or 13Cr faced WC6	CA 15 or 13Cr faced WC9	CF8M
Seat(1)(2)	CoCr alloy faced carbon steel	CoCr alloy faced F11	CoCr alloy faced F22	CoCr alloy faced F316
Packing flange	Carbon steel			Stainless steel
Gland bushing	Carbon steel			Stainless steel
Packing ring(1)	Graphite			Graphite
Gland stud	Gr. B or B7(4)			F316, B8M or 630(5)
Gland nut	Gr. 2H			Gr. 8M
Body/bonnet nut	Gr. 2H	Gr. 4		Gr. 8M
Body/bonnet stud	B7	B16		B8M or 630
Back seat(1)(3)	SS 410			SS 316
Gasket(1)	Class 150: corrugated steel/graphite Class 300–1500: spiral wound stainless steel/graphite			
Key	Carbon steel			
Yoke bushing	Carbon steel			Stainless steel
Bearing	Steel			
Handwheel nut	Malleable iron or steel			
Handwheel(1)	Malleable iron or ductile iron			
Grease fitting	Steel			
Groove pin	Carbon steel			Stainless steel
Bushing	Carbon steel			Stainless steel
Washer	Carbon steel			Stainless steel
Name plate	Stainless steel			
Identification tag	Stainless steel			
Rivet	Stainless steel			
Stem nut	A 439 Austenitic ductile iron Gr. D-2C			

(1) Other materials available.
(2) Hardfaced.
(3) Hardened.
(4) For eye bolts Gr.B, for studs B7 is used.
(5) For eye bolts F316, for studs B8M or 630 is used.

DESIGN FEATURES

- **Universal trim**. 13Cr stem, wedge in CA 15 or 13Cr faced, and CoCr alloy faced seat API Trim 8 suitable for applications up to 850°F (454°C).
- **Seat face** CoCr alloy hardfaced, ground, and lapped to a mirror finish.
- **Flexible wedge** with low center stem-wedge contact, in solid CA15 (13Cr) or hardfaced with 13Cr, SS 316, Monel or CoCr alloy. Wedge is ground and lapped to a mirror finish and tightly guided to prevent dragging and seat damage. A CoCr alloy hardfaced CF8M wedge is also available.
- **Non-rotating stem** with precision Acme threads and burnished finish. Double Acme for faster operation.
- **Body and bonnet joint** accurately machined. Gasket materials on page 5, details on page 15.
- **Body and bonnet** castings are precision machined. One-piece bonnet up to NPS 12 (DN 300) for better alignment and fewer parts.
- **Gland** has two-piece construction for easy alignment.
- **Flanges:**
  ASME Classes 150–300: 1/16" raised face.
  ASME Classes 600–1500: 1/4" raised face.
  Finish 125–250 AARH for all valves.
- **Rotating stem nut** is Austenitic ductile iron Gr. D-2C renewable in line (as shown). Thrust bearings are supplied as follows:

  ASME Classes 150–300:
  NPS 10–12 (DN 250–300), 1 bearing (top),
  NPS 16 (DN 400) and up, two bearings

  ASME Classes 600–1500: NPS 6 (DN 150) and up.

Velan reserves the right to change this information without notice. © 2013 Velan Inc. All rights reserved.

DESIGN SPECIFICATIONS

ITEM	APPLICABLE SPECIFICATION
Wall thickness and general design ≤ NPS 24	API 600, ISO 10434
Wall thickness and general design > NPS 24	ASME B16.34 plus additional allowance
Pressure-temperature rating	ASME B16.34
Face-to-face dimensions for butt weld and flanged valves	ASME B16.10
Flange design	ASME B16.5
Butt welding design	ASME B16.25
Materials	ASTM

For information on BELLOWS SEAL VALVES see VEL-BS catalog.

GATE VALVE DIMENSIONS

SIZE	ASME CLASS 150						ASME CLASS 300					ASME CLASS 600					ASME CLASS 900					ASME CLASS 1500				
NPS DN	A		B(1)	C(1)	D	E	A	B(1)	C(1)	D	E	A	B(1)	C(1)	D	E	A	B(1)	C(1)	D	E	A	B(1)	C(1)	D	E
	BW	FLG																								
2 50	8.50 216	7.00 178	15.63 397	20.38 518	2.00 51	8 203	8.50 216	15.63 397	20.38 518	2.00 51	8 203	11.50 292	15.66 398	20.51 521	2.00 51	8 203	14.50 368	21.25 540	29.00 737	1.88 48	10 254	14.50 368	21.25 540	29.00 737	1.88 48	10 254
2½ 65	9.50 241	7.50 191	16.88 429	22.14 562	2.50 64	8 203	9.50 241	16.94 430	22.20 564	2.50 64	8 203	13.00 330	18.59 472	24.19 614	2.50 64	10 254	–	–	–	–	–	–	–	–	–	–
3 80	11.13 282	8.00 203	18.56 471	24.26 616	3.00 76	10 254	11.13 283	20.22 514	26.38 670	3.00 76	10 254	14.00 356	21.63 549	27.78 706	3.00 76	10 254	15.00 381	25.75 654	34.50 876	2.88 73	14 356	18.50 470	25.75 654	34.50 876	2.75 70	14 356
4 100	12.00 305	9.00 229	22.25 565	28.32 719	4.00 102	10 254	12.00 305	23.90 607	30.95 786	4.00 102	10 254	17.00 432	25.75 654	32.76 832	4.00 102	14 356	18.00 457	28.75 730	37.50 953	3.88 99	18 457	21.50 546	28.75 730	37.50 953	3.63 92	18 457
6 150	15.88 403	10.50 267	31.19 792	38.00 965	6.00 152	14 356	15.87 403	32.31 821	40.38 1026	6.00 152	14 356	22.00 559	36.28 922	44.18 1122	6.00 152	20 508	24.00 610	39.00 991	49.00 1245	5.75 146	20 508	27.75 705	39.00 991	49.00 1245	5.38 137	(2)
8 200	16.50 419	11.50 292	38.19 970	46.13 1172	8.00 203	18 457	16.50 419	40.94 1040	50.16 1274	8.00 203	18 457	26.00 660	43.72 1110	53.25 1353	7.88 200	24 610	29.00 737	51.75 1315	62.75 1594	7.50 191	(2)	32.75 832	45.25 1149	60.00 1524	7.00 178	(2)
10 250	18.00 457	13.00 330	47.16 1198	56.28 1430	10.00 254	20 508	18.00 457	49.19 1249	59.87 1521	10.00 254	20 508	31.00 787	49.06 1246	59.87 1521	9.75 248	30 762	33.00 838	57.75 1467	67.25 1708	9.38 238	(2)	39.00 991	57.75 1467	71.00 1803	8.75 222	(2)
12 300	19.75 502	14.00 356	55.91 1420	66.75 1695	12.00 305	20 508	19.75 502	59.00 1499	70.61 1763	12.00 305	20 508	33.00 838	61.13 1553	72.74 1848	11.75 298	30 762	38.00 965	66.57 1691	83.00 2108	11.13 283	(2)	–	–	–	–	–
14 350	22.50 572	15.00 381	61.50 1562	75.50 1918	13.25 337	24 610	30.00 762	61.38 1559	77.75 1975	13.25 337	24 610	35.00 889	72.50 1842	83.50 2121	12.88 327	(2)	40.50 1029	73.88 1877	90.00 2286	12.25 311	(2)	–	–	–	–	–
16 400	24.00 610	16.00 406	68.75 1746	85.00 2159	15.25 387	24 610	33.00 838	68.75 1746	85.50 2172	15.25 387	30 762	39.00 991	82.25 2089	91.00 2311	14.75 375	(2)	44.50 1130	80.44 2043	100.00 2540	14.00 356	(2)	–	–	–	–	–
18 450	26.00 660	17.00 432	73.25 1861	90.00 2286	17.25 438	24 610	36.00 914	77.88 1978	94.00 2388	17.00 432	(2)	43.00 1092	87.06 2211	116.00 2946	16.50 419	(2)	–	–	–	–	–	–	–	–	–	–
20 500	28.00 711	18.00 457	83.00 2108	100.00 2540	19.25 489	30 762	39.00 991	86.50 2197	100.00 2540	19.00 483	(2)	47.00 1194	103.00 2616	123.00 3124	18.25 464	(2)	–									
24 600	32.00 813	20.00 508	97.00 2464	115.00 2921	23.25 591	30 762	45.00 1143	101.25 2572	125.00 3175	23.00 584	(2)	55.00 1397	115.00 2921	132.00 3353	22.00 559	(2)	–									
26 650	34.00 864	22.00 559	114.50 2908	125.00 3175	25.00 635	(2)	49.00 1245	114.50 2908	125.00 3175	25.00 635	(2)	57.00 1448	103.86 2638	125.00 3175	21.38 543	(2)	–									
28 700	36.00 914	24.00 610	118.63 3013	130.00 3302	27.00 686	(2)	53.00 1346	118.63 3013	130.00 3302	27.00 686	(2)	–	–	–	–	–	–									
30 750	36.00 914	24.00 610	124.13 3153	140.00 3556	29.25 743	(2)	55.00 1397	124.13 3153	145.00 3683	29.25 743	(2)	65.00 1651	122.50 3112	150.00 3810	24.75 629	(2)	–									
32 800	38.00 965	26.00 660	129.63 3293	150.00 3810	30.75 781	(2)	60.00 1524	129.63 3293	150.00 3810	30.75 781	(2)	–	–	–	–	–	–									
34 850	40.00 1000	28.00 700	143.00 3632	163.00 4140	32.75 832	(2)	64.00 1626	147.63 3750	168.00 4267	32.75 832	(2)	76.00 1930	138.00 3505	187.00 4750	31.00 787	(2)	–									
36 900	40.00 1016	28.00 711	146.68 3726	170.00 4318	35.25 895	(2)	68.00 1727	147.81 3754	185.00 4699	35.25 895	(2)	68.00 1727	145.13 3686	170.00 4318	29.00 737	(2)	–									
38 950	41.00 1041	29.00 736	155.91 3960	175.00 4445	36.50 927	(2)	–	–	–	–	–	86.00 2184	121.00 3073	162.00 4115	34.50 876	(2)	–									
40 1000	42.00 1067	30.00 762	158.66 4030	188.00 4775	38.50 978	(2)	76.00 1930	167.00 4242	190.00 4826	38.50 978	(2)	90.00 2286	175.00 4445	198.00 5030	36.38 924	(2)	–									
42 1050	44.00 1118	31.00 787	166.50 4229	195.00 4953	40.25 1022	(2)	76.00 1930	167.00 4242	190.00 4826	38.50 978	(2)	–	–	–	–	–	–									
44 1100	–	–	–	–	–	–	–	–	–	–	–	98.00 2490	185.00 4700	211.00 5360	40.50 1028	(2)	–									
46 1150	43.00 1092	34.00 850	186.79 4744	225.00 5715	44.00 1117	(2)																				
48 1200	–	36.00 914	189.81 4821	225.00 5715	46.00 1168	(2)	–	–	–	–	–	–	–	–	–	–	–									
50 1250	–	38.00 950	204.06 5183	231.00 5867	47.25 1200	– (2)	–	–	–	–	–	110.00 2794	214.00 5435	230.00 5842	46.00 1168	(2)	–									
54 1350	–	40.00 1016	216.56 5501	248.00 6299	51.50 1308	(2)	–	–	–	–	–	–	–	–	–	–	–									
56 1400	–	41.00 1041	228.00 5791	258.25 6458	53.69 1364	–	–	–	–	–	–	–	–	–	–	–	–									
60 1500	–	42.00 1067	238.80 6066	275.00 6985	57.50 1461	(2)	–	–	–	–	–	–	–	–	–	–	–									
64 1600	–	44.00 1118	259.5 6591	300.00 7620	61.25 1556	(2)	–	–	–	–	–	–	–	–	–	–	–									

ASME Classes 900–2500 forged gate valves also available.

See page 30 and 31 for valve weights and C_Vs.

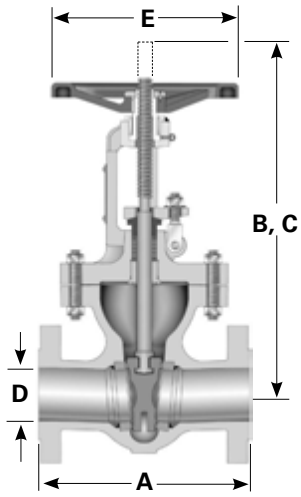

BW = Butt weld
FL = Flanged
B = Center-to-top, open
C = Dismantling height

(1) Height does not include actuator. (2) Gear actuator.
(3) Butt weld and flanged valves have the same end-to-end dimensions for class 300 and up.

Velan reserves the right to change this information without notice. © 2013 Velan Inc. All rights reserved.

VELAN CAST STEEL GLOBE & STOP CHECK VALVES

BOLTED BONNET CAST CARBON, STAINLESS OR ALLOY STEEL

NPS 2–24 (DN 50–600), ASME CLASSES: 150–1500

NOW THE ONLY GLOBE VALVE WITH NON-ROTATING STEM

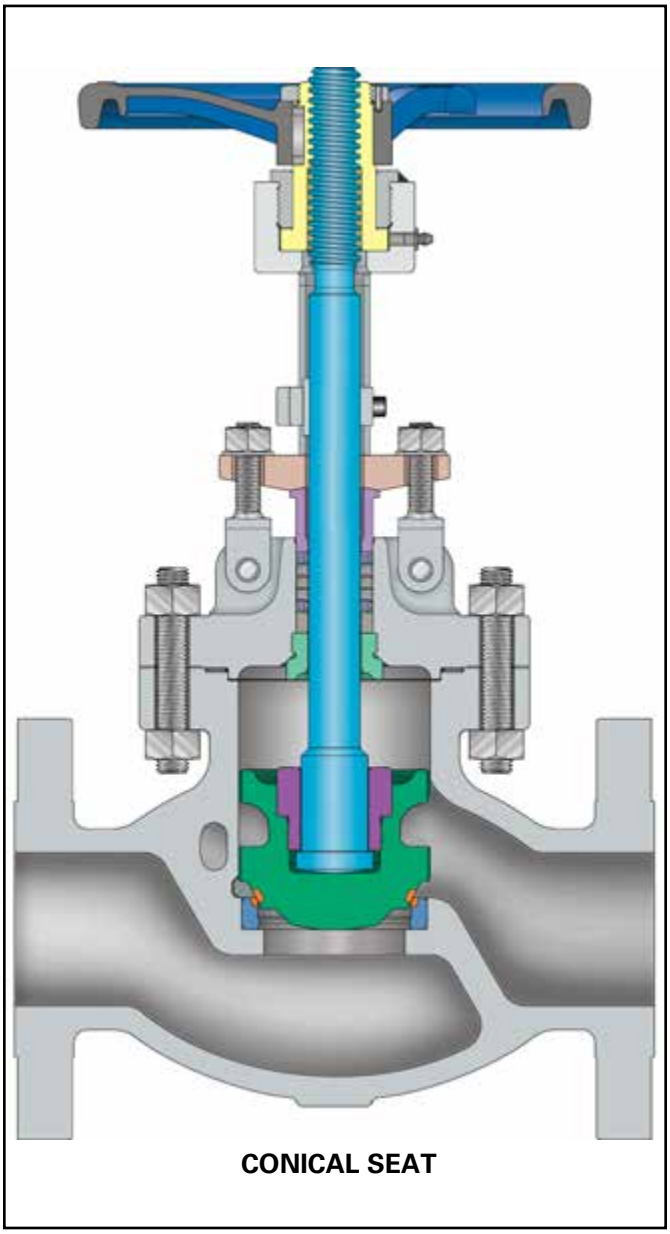

CONICAL SEAT

All sizes and pressure classes have conical seats.

For information on BELLOWS SEAL VALVES see VEL-BS catalog.

DESIGN FEATURES:

- **Non-rotating stem** with precision Acme threads and burnished finish. Valve suitable for horizontal installation.
- **Universal trim.**
  13Cr stem, 13Cr faced disc, and CoCr alloy faced seats
  API Trim 8 suitable for service up to 850°F (454°C).
- **Seat face** CoCr alloy hardfaced, ground, and lapped to a mirror finish. Conical seat machined to 8 RMS.
- **Tapered disc.**
  Body guided disc accurately mates the hardfaced surface of the disc with the surface of the seat, hardfaced with 13Cr, CoCr alloy, SS 316, or Monel, ground and lapped with seat.

  Disc in SS 316 hardfaced with CoCr alloy also available.

  NPS 2–6 (DN 50–150) valves may have solid CA15 (13Cr) discs.
- **Body and bonnet.**
  Castings are precision machined. One-piece bonnet for better alignment, fewer parts.
- **Stuffing box** finish to 63 RMS or better.
- **Body and bonnet joint** accurately machined. Fully enclosed gasket. Gasket materials on page 5. Details on page 15.
- **Gland** has two-piece construction for easy alignment.
- **Rotating stem nut.**
  Austenitic ductile iron Gr. D-2C, renewable in-line.
- **Torque arm** reduces wear on packing rings and enables better sealing and reduces torque.
- **Impactor handwheels.**
  Globe and stop check valves require higher closing torques than gate valves with the same seat diameter and pressure class. The most economical mechanism for tight shutoff is the impactor handwheel. Two lugs cast under the wheel strike simultaneous blows and give 3–10 times the closing force of standard handwheels. Impactor handwheels are supplied at manufacturer's option unless specified by customer (see page 23).
- **Flanges:**
  ASME Classes 150–300: 1/16" raised face.
  ASME Classes 600–1500: 1/4" raised face.
  Finish 125–250 AARH for all valves.

Velan reserves the right to change this information without notice. © 2013 Velan Inc. All rights reserved.

STANDARD MATERIALS

PART	MATERIALS			
Body[1]	WCB	WC6	WC9	CF8M
Bonnet[1]	WCB	WC6	WC9	CF8M
Seat[1][2]	CoCr alloy faced carbon steel	CoCr alloy faced F11	CoCr alloy faced F22	CoCr alloy faced F316
Disc	CA 15 or faced A105	CA 15 or 13Cr faced F11	CA 15 or 13Cr faced F22	CF8M or F316
Disc nut	Carbon steel	SS 304 or 316		
Stem[1][3]	SS 410			SS 316 or 630
Backseat[1][3]	SS 410			SS 316
Packing ring[1]	Graphite			
Gland stud	Gr. B or B7 [4]			F316, B8M or 630[5]
Gland nut	Gr. 2H			Gr. 8M
Packing flange	Carbon steel			SS
Gland bushing	Carbon steel			SS
Bonnet stud	B7	B16		B8M or 630
Bonnet nut	Gr. 2H	Gr. 4		Gr. 8M
Hinge pin	Steel			SS
Gasket[1]	Spiral wound stainless steel/graphite			
Torque arm	Carbon steel			
Yoke bushing	Carbon steel			Stainless steel
Stem nut	A 439 Austenitic ductile iron Gr. D-2C			
Handwheel nut	Malleable iron or steel			
Handwheel[1]	Malleable iron or Ductile iron			

(1) Other materials available.
(2) Hardfaced.
(3) Hardened.
(4) For eye bolts Gr.B, for studs B7 is used.
(5) For eye bolts F316, for studs B8M or 630 is used.

DESIGN SPECIFICATIONS

ITEM	APPLICABLE SPECIFICATION
General design	BS 1873
Wall thickness	API 600
Pressure-temperature rating	ASME B16.34
Face-to-face dimensions for butt weld and flanged valves	ASME B16.10
Flange design	ASME B16.5
Butt welding design	ASME B16.25
Materials	ASTM

ASME CLASS	FIGURE NUMBERS		
	GLOBE	STOP CHECK	NEEDLE
150	0074C	0084C	0094C
300	1074C	1084C	1094C
600	2074C	2084C	2094C
900	7074C	7084C	7094C
1500	3074C	3084C	3094C

Forged globe valves
ASME Classes 900–2500 and
Inclined cast globe valves
ASME Classes 900–2500 also available

GLOBE VALVE DIMENSIONS

SIZE	ASME CLASS 150					ASME CLASS 300					ASME CLASS 600					ASME CLASS 900					ASME CLASS 1500				
NPS DN	A	B[1]	C[1]	D	E	A	B[1]	C[1]	D	E	A	B[1]	C[1]	D	E	A	B[1]	C[1]	D	E	A	B[1]	C[1]	D	E
2 50	8.00 203	16.85 428	20.88 530	2.00 51	8 203.2	10.50 267	16.85 428	20.88 530	2.00 51	8 203	11.50 292	17.10 434	21.13 537	2.00 51	10 254	14.50 368	19.75 502	25.00 635	1.88 48	18 457	14.50 368	19.75 502	25.00 635	1.88 48	18 457
2½ 65	8.50 216	17.10 434	21.25 540	2.50 64	10 254	11.50 292	17.10 434	21.25 540	2.50 64	10 254	13.00 330	18.67 474	22.88 581	2.50 64	10 254	–	–	–	–	–	–	–	–	–	–
3 80	9.50 241	18.42 468	22.75 578	3.00 76	10 254	12.50 318	18.42 468	22.75 578	3.00 76	10 254	14.00 356	20.19 513	24.13 613	3.00 76	14 356	15.00 381	24.09 612	30.50 775	2.88 73	14[2][3] 356	18.50 470	24.09 612	30.50 775	2.75 70	14[2][3] 356
4 100	11.50 292	20.88 530	26.18 665	4.00 102	14 356	14.00 356	20.88 530	26.18 665	4.00 102	14 356	17.00 432	23.88 607	29.25 743	4.00 102	24[2][3] 610	18.00 457	27.50 699	35.38 899	3.88 99	18.00 457	**B** = Center-to-top, open **C** = Dismantling height				
6 150	16.00 406	25.75 654	32.00 813	6.00 152	24 610	17.50 445	26.38 670	32.88 835	6.00 152	24[2][3] 610	22.00 559	31.22 793	37.88 962	6.00 152	24[2][3] 610	24.00 610	39.13 939	45.03 1143	5.75 146	(4)					
8 200	19.50 495	30.73 780	38.38 975	8.00 203	24 610	22.00 559	32.00 813	38.88 988	8.00 203	24 [2]or[4] 610	26.00 660	41.75 1060	57.88 1470	7.88 200	(4)	29.00 737	50.13 1273	62.63 1590	7.50 191	(4)					
10 250	24.50 622	39.25 997	46.75 1187	10.00 254	24[2][3] 610	24.50 622	42.34 1075	52.18 1325	10.00 254	24 [2]or[4] 610	31.00 787	47.16 1198	59.00 1499	9.75 248	(4)										
12 300	27.50 699	42.52 1080	53.00 1346	12.00 305	24 [2]or[4] 610	28.00 711	46.19 1173	62.75 1594	12.00 305	(4)	–	–	–	–	–										
14 350	31.00 787	54.21 1377	65.44 1662	13.25 337	(4)	33.00 838	54.21 1377	72.00 1829	13.25 337	(4)	–	**See page 30 –31 for valve weights and C_Vs.**													
16 400	36.00 914	59.94 1522	72.63 1845	15.25 387	(4)	34.00 863	59.94 1522	76.00 1930	15.25 387	(4)	–														
18 450	38.50 978	59.62 1514	75.00 1905	17.50 444	(4)	38.50 978	59.62 1514	75.00 1905	17.50 444	(2)															
24 600	51.00 1295	85.00 2159	119.00 3023	21.00 533	(4)	55.00 1397	85.00 2159	119.00 3023	21.00 533	(2)															

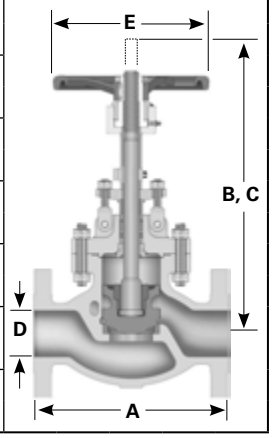

(1) Height does not include actuators. (2) Impactor handwheel.
(3) Gear actuator is optional. (4) Gear actuator.

Velan reserves the right to change this information without notice. © 2013 Velan Inc. All rights reserved.

VELAN CAST STEEL API 594 SWING CHECK VALVES

CAST CARBON, STAINLESS OR ALLOY STEEL

NPS 2–48 (DN 50–1200), ASME CLASSES: 150–1500



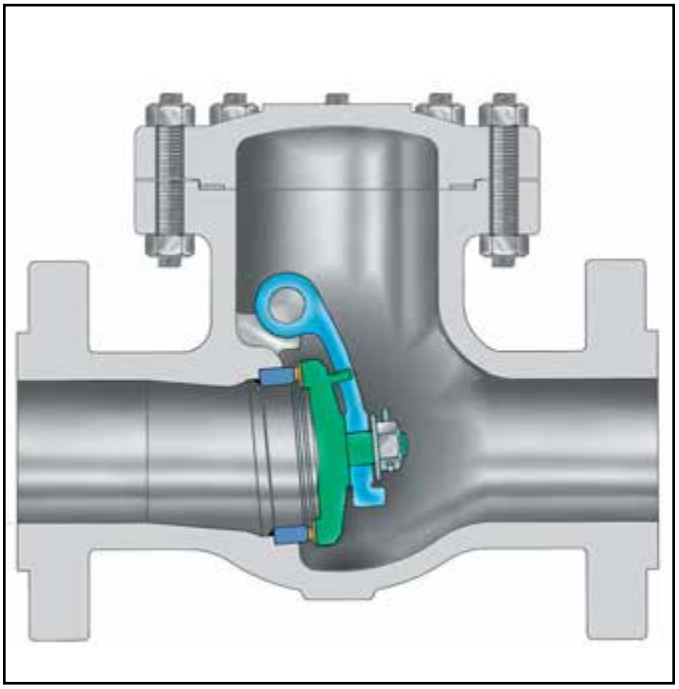

STANDARD MATERIALS

PART	MATERIALS			
Body(1)	WCB	WC6	WC9	CF8M
Seat(1)(2)	CoCr alloy faced CS	CoCr alloy faced F11	CoCr alloy faced F22	CoCr alloy faced F316
Hinge pin(1)	SS 410			SS 316
Gasket(1)	Spiral wound stainless steel/graphite			
Cover stud	Gr. B7	B16		B8M or 630
Cover nut	Gr. 2H	Gr. 4		Gr. 8M
Cover(1)	WCB	WC6	WC9	CF8M
Washer	Commercial			
Disc(1)	CA 15 or 13Cr faced WCB	CA 15 or 13Cr faced WC6	CA 15 or 13Cr faced WC9	CF8M
Disc hanger	WCB	WC6	WC9	CF8M
Disc nut	Gr. 2H	Gr. 4		Gr. 8M

(1) Other materials available.
(2) Hardfaced.

See catalog VEL-PS for FORGED STEEL CHECK VALVES ASME Classes 900–2500.

DESIGN FEATURES

- **Body and cover.**
  Precision machined castings.
  Exclusive: Disc shaft does not penetrate body.
- **Body and cover joint.**
  Accurately machined, fully-enclosed gasket (gasket materials on page 5).
- **Disc.**
  Robust one-piece construction to withstand the severe shock of check valve service. Hardfaced with 13Cr, CoCr alloy, SS 316, or Monel, ground and lapped to a mirror finish. Sizes NPS 2–6 (DN 50–150) may have solid CA 15 (13Cr) disc. SS 316 disc with CoCr alloy facing also available.
- **Disc assembly.**
  Non-rotating disc is fastened securely to disc hanger with a lock nut and cotter pin. Disc hanger is supported on a sturdy disc carrier hinge pin of excellent bearing qualities. All parts are accessible from top for easy servicing.
- **Flanges:**
  ASME Classes 150–300: 1/16" raised face.
  ASME Classes 600–1500: 1/4" raised face.
  Finish 125–250 AARH for all valves.

 Velan reserves the right to change this information without notice. © 2013 Velan Inc. All rights reserved.

DESIGN SPECIFICATIONS

ITEM	APPLICABLE SPECIFICATION
Wall thickness and general valve design	API 594
Pressure–temperature rating	ASME B16.34
Face-to-face dimensions for butt weld and flanged valves	ASME B16.10
Flange design	ASME B16.5
Butt welding design	ASME B16.25
Materials	ASTM

CLASS	FIGURE NUMBER	CLASS	FIGURE NUMBER
150	0114C	900	7114C
300	1114C	1500	3114C
600	2114C		

See page 30 and 31 for valve weights and CVs.

Other sizes on application.

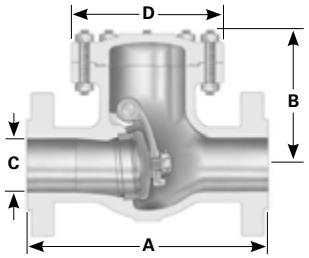

CHECK VALVE DIMENSIONS

SIZE	ASME CLASS 150				ASME CLASS 300				ASME CLASS 600				ASME CLASS 900				ASME CLASS 1500			
NPS DN	A	B	C	D	A	B	C	D	A	B	C	D	A	B	C	D	A	B	C	D
2 50	8.00 203	5.75 146	2.00 51	6.75 171	10.50 267	6.00 152	2.00 51	6.75 171	11.50 292	6.25 159	2.00 51	6.75 171	14.50 368	9.50 241	1.88 48	8.63 219	14.50 368	9.50 241	1.88 48	8.63 219
2½ 65	8.50 216	6.25 159	2.50 64	6.75 171	11.50 292	6.25 159	2.50 64	6.75 171	13.00 330	6.50 165	2.50 64	7.50 191	16.50 419	10.00 254	2.25 57	9.25 235	16.50 419	10.00 254	2.25 57	9.25 235
3 80	9.50 241	7.75 197	3.00 76	8.50 216	12.50 318	7.75 197	3.00 76	8.50 216	14.00 356	8.75 222	3.00 76	9.75 248	15.00 381	10.50 267	2.88 73	10.50 267	18.50 470	11.50 292	2.75 70	10.50 267
4 100	11.50 292	8.75 222	4.00 102	10.25 260	14.00 356	8.75 222	4.00 102	10.25 260	17.00 432	9.25 235	4.00 102	12.00 305	18.00 457	11.75 299	3.88 99	12.25 311	21.50 546	12.00 305	3.63 92	12.25 311
6 150	14.00 356	10.75 273	6.00 152	12.50 318	17.50 445	10.75 273	6.00 152	12.50 318	22.00 559	11.50 292	6.00 152	15.75 400	24.00 610	15.00 381	5.75 146	15.25 387	27.75 705	16.50 419	5.38 137	16.00 406
8 200	19.50 495	12.75 324	8.00 203	15.75 400	21.00 533	12.75 324	8.00 203	15.75 400	26.00 660	13.50 343	7.88 200	15.75 400	29.00 737	19.25 489	7.50 191	18.38 467	32.75 832	21.00 533	7.00 178	20.75 527
10 250	24.50 622	15.50 394	10.00 254	18.50 470	24.50 622	16.25 413	10.00 254	18.50 470	31.00 787	16.75 425	9.75 248	19.50 495	33.00 838	21.98 558	9.38 238	22.25 565	39.00 991	23.93 608	8.75 222	22.75 578
12 300	27.50 699	17.00 432	12.00 305	20.50 521	28.00 711	17.00 432	12.00 305	20.50 521	33.00 838	18.50 470	11.75 298	22.50 572	–	–	–	–	–	–	–	–
14 350	31.00 787	19.63 499	13.25 337	23.00 584	33.00 838	19.63 499	13.25 337	23.00 584	35.00 889	20.93 532	12.88 327	26.25 667	–	–	–	–	–	–	–	–
16 400	34.00 864	22.00 559	15.25 387	26.50 673	34.00 864	22.50 572	15.25 387	26.50 673	39.00 991	23.38 594	14.75 375	28.25 718	–	–	–	–	–	–	–	–
18 450	38.50 978	25.00 635	17.13 435	28.50 724	38.50 978	25.00 635	17.13 435	28.50 724	43.00 1092	28.67 728	16.50 419	31.50 800	–	–	–	–	–	–	–	–
20 500	38.50 978	26.50 673	19.00 483	31.50 800	40.00 1016	26.50 673	19.00 483	31.50 800	47.00 1194	27.12 689	18.25 464	35.25 895	52.00 1320	34.95 887	17.50 444	37.25 946	– –	– –	– –	– –
24 600	51.00 1295	31.25 794	23.25 591	37.00 940	53.00 1346	31.25 794	23.25 591	37.00 940	55.00 1397	35.69 907	22.00 559	40.25 1022	– –	– –	– –	– –	– –	– –	– –	– –
26 650	51.00 1295	32.63 829	25.00 635	37.25 946	–	–	–	–	57.00 1448	38.49 980	23.75 603	44.00 1118	–	–	–	–	–	–	–	–
28 700	57.00 1448	36.55 928	27.00 686	42.00 1067	59.00 1499	36.55 928	27.00 686	42.00 1067	–	–	–	–	–	–	–	–	–	–	–	–
30 750	60.00 1524	36.89 937	29.25 743	44.50 1130	–	–	–	–	–	–	–	–	–	–	–	–	–	–	–	–
32 800	64.00 1626	40.30 1026	30.75 781	47.25 1200	–	–	–	–	–	–	–	–	70.00 1778	47.56 1280	25.25 641	50.00 1270	–	–	–	–
34 850	–	–	–	–	64.00 1626	42.38 1076	32.75 832	48.75 1238	–	–	–	–	–	–	–	–	–	–	–	–
36 900	77.00 1956	41.78 1061	35.25 895	53.00 1346	–	–	–	–	–	–	–	–	–	–	–	–	–	–	–	–
38 950	80.00 2032	47.01 1194	36.63 930	53.00 1346	–	–	–	–	–	–	–	–	81.50 2070	50.38 1280	30.00 762	57.00 1448	–	–	–	–
42 1050	78.00 1981	49.72 1263	37.88 962	63.50 1613	78.00 1981	53.22 1352	37.88 962	63.50 1613	–	–	–	–	–	–	–	–	–	–	–	–
48 1200	94.00 2388	55.00 1397	46.00 1168	61.00 1549	–	–	–	–	–	–	–	–	–	–	–	–	–	–	–	–

Velan reserves the right to change this information without notice. © 2013 Velan Inc. All rights reserved.

VELAN SPECIAL SERVICES

LIVE-LOADED VALVES

GATE VALVE

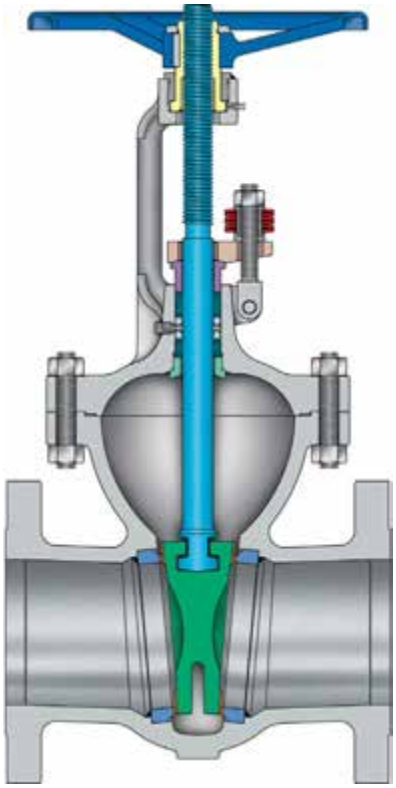

GLOBE VALVE

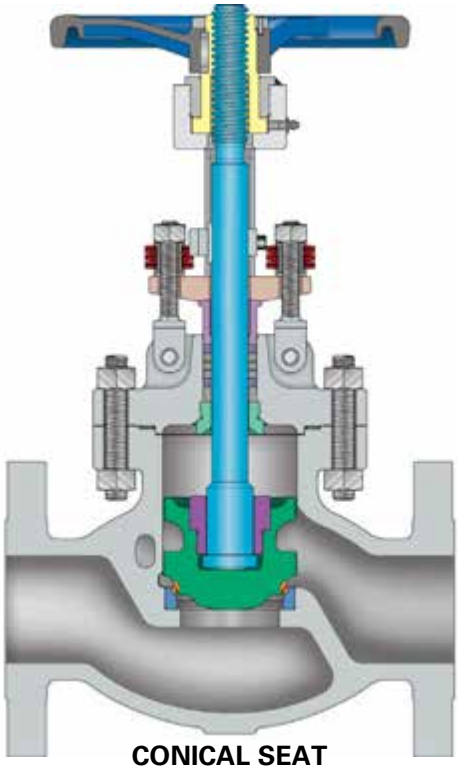

CONICAL SEAT

CAST STEEL GATE, NPS 2–64 (DN 50–1600)
CAST STEEL GLOBE, NPS 2–24 (DN 50–600)

ASME CLASSES: 150–1500 WITH SINGLE OR DOUBLE PACKING, LEAK-OFF AND LIVE-LOADING

DESIGN FEATURES

- **Safer and tighter stem seal.**
- **Short and narrow packing chamber** improves sealing effectiveness.
- **Long-life leakproof packing chamber** with double packing and leak-off or single set packing.

  Double packing
  Two sets of graphite packing rings compressed to 4000 psi. A lantern ring and leak-off provide option for removal of leakage, if any, from lower packing set.

  Single set packing
  Three or four graphite rings between braided rings, 90-95 lbs./cu. ft. density.
- **Live-loading.**
  Two sets of Belleville springs keep stem tight for long periods of time reducing frequency of maintenance.
- **Two-piece stem drive** is renewable in-line.
- **Stronger leakproof body-bonnet joint.**
- **Class 150** corrugated graphite-filled steel gasket.
- **Classes 300–1500**
  have round bonnet and fully encased spiral wound gasket
- **Welded-in seats** hardfaced with CoCr alloy.
- **Flexible one-piece wedge**, hardfaced with CoCr alloy or 13Cr (solid 13Cr up to NPS 8 (DN 200)).
- **13Cr hardened stem** with mirror-like, burnished finish for longer packing life.

For dimensions on gate valves see page 21.

For other globe valve design features see page 22.

For dimensions on globe valves see page 23.

For BELLOWS SEAL GATE AND GLOBE VALVES NPS ½–12 (DN 15–300) see catalog VEL–BS.

Note: For gate valves larger than NPS 24 (DN 600), wall thickness is based on B16.34 plus additional wall thickness allowance.

Velan reserves the right to change this information without notice. © 2013 Velan Inc. All rights reserved.

VELAN SPECIAL SERVICES

HYDROFLUORIC (HF) ACID PROCESSING VALVES

Hydrofluoric acid is one of the strongest and most corrosive acids. Industries using HF acid in their manufacturing process have placed an increasing emphasis on safety in using this product.

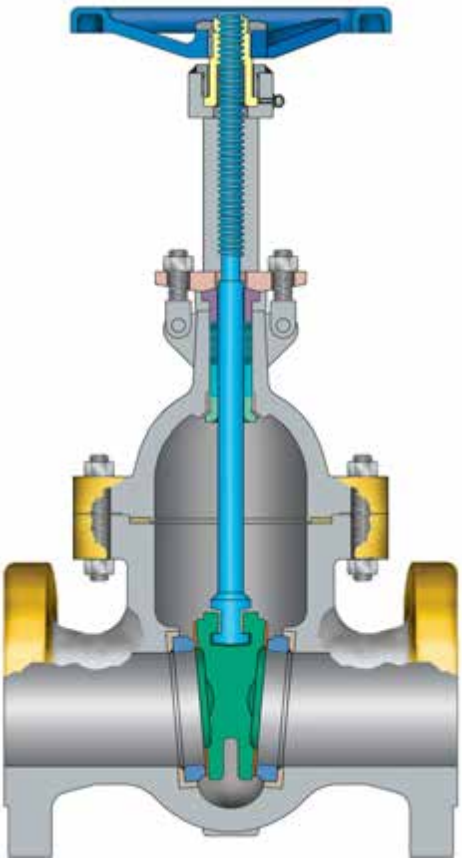

GATE VALVE

HF ACID GATE, GLOBE AND CHECK VALVES CARBON STEEL AND MONEL, NPS 2–36 (DN 50–900)

PRESSURE CLASSES 150–300

Fugitive emissions are a critical factor in the performance of any HF acid valve and at Velan, we have been committed to reducing emissions beyond the industry standards, and providing the highest quality products to our customers for over 60 years. Velan offers a comprehensive line of Phillips-approved and UOP-listed HF acid gate, globe, and check valves with several benefits.

DESIGN FEATURES

- **Nickel plated overlay on backseat in stem hole** to combat severe alkylation conditions.
- **HF acid detecting paint** to ensure valve integrity.
- **Stem** made from solid age hardened K-Monel 500 for increased strength and corrosion resistance.
- **Casting design** X ray "RT" quality castings as per B16.34 acceptance standards. Velan is one of the first valve manufacturers to have the MAGMASOFT® computer casting simulation program to ensure high quality levels.
- **Bonnet joint** accurately machined for better service life.
- **Seal welded seats in Monel.** Monel seats are welded-in to ensure zero leakage behind and around the seat and then ground and lapped after welding using state-of-the-art technology to prevent in-service corrosion.
- **Body/bonnet wall thickness** to API 600.
- **Velan's low-fugitive emissions guarantee.** Based on extensive laboratory testing and field experience.

OPTIONAL DESIGN FEATURES

1. **Nickel overlay packing box liner.**
2. **Packing box in Monel** to combat severe alkylation conditions in this critical area.

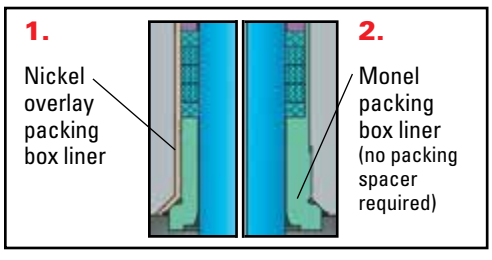

3. **Grease injector and lantern ring:** where grease injection is a requirement (UOP only).
4. **PTFE seat insert:** resists abrasion and corrosion.
5. **PTFE seat seal grease injection:** when required (UOP only).

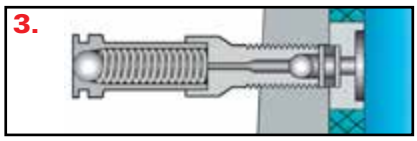



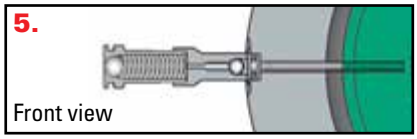

For more information on VELAN HF ACID GATE, GLOBE AND CHECK VALVES see flyer FLY–HFA.

Velan reserves the right to change this information without notice. © 2013 Velan Inc. All rights reserved.

VELAN SPECIAL SERVICES

CAST STEEL CRYOGENIC VALVES

GATE VALVE

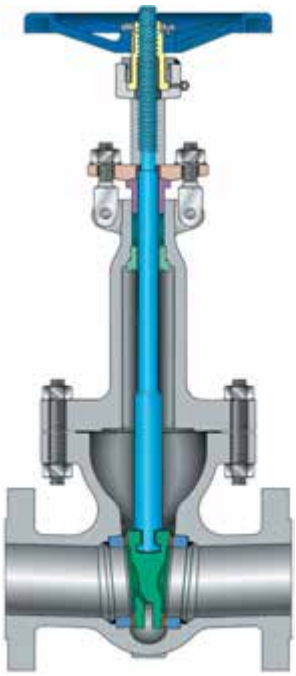

GLOBE VALVE

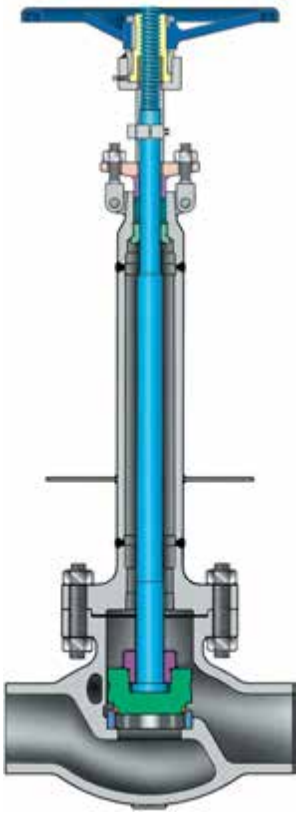

CAST CRYOGENIC GATE, GLOBE, AND CHECK VALVES AUSTENITIC STAINLESS STEEL, NPS 2–30 (DN 50–750)

PRESSURE CLASSES 150–1500

The production, transport, and storage of liquefied gases such as oxygen, nitrogen, argon, natural gas, hydrogen, or helium (down to -425°F/ -253.9°C) presents several technical problems. Velan specially-adapted extended bonnet cast valves offer safe and efficient service.

MATERIALS

- **Body and bonnet:** Austenitic stainless steel castings used for bodies and bonnets offer excellent impact strength, minimal heat loss, and protection against corrosion.
- **Stem:** Austenitic stainless steel. To reduce galling, stems are also offered in A479 grade XM-19 with high toughness even at extreme low temperatures, excellent low friction, and galling-free movement at points of stem contact.
- **Wetted parts:** all Austenitic stainless steel and CoCr alloy.
- **Stem nut/yoke bushing:** Austenitic ductile iron Gr. D-2C.
- **Packing:** PTFE or graphite packing protected from freezing by a column of insulating gas.
- **Seating faces:** CoCr alloy is used to prevent seizing and galling. When extremely tight shutoff is required, globe and check valves are supplied with Neoflon, PTFE, or other soft inserts.
- **Bolting:** Strain-hardened Austenitic stainless steel.
- **Lubrication of stem nut:** Exxon Nebula Lubriplate No. 930-AA or Shell Darina EPI or equivalent.

DESIGN FEATURES

- **Extended bonnets** with sufficient gas column length, usually specified by customer, are supplied for all valves to keep the stem packing at sufficient distance away from the cold fluid to remain functional.
- **Flexible wedges** with CoCr alloy seating faces for cryogenic service.
- **Neoflon inserts** are available for globe, piston, and API 594 swing check discs.
- **Cleaning:** All cryogenic valves are thoroughly degreased and cleaned and pipe ends are sealed to prevent contamination.

For more details on CRYOGENIC GATE, GLOBE, AND CHECK VALVES see VEL–CRYO catalog.

TABLE OF LIQUEFIED GASES

Type	Boiling point		Liquid density lb / ft.^{3}	Type	Boiling point		Liquid density lb / ft.$_3$
	°C	°F			°C	°F	
Natural gas (LNG)	-168	-270	26	Air	-194.4	-318	57.87
Methane (CH_4)	-161.5	-258	26.20	Nitrogen (N_2)	-195.8	-320	50.45
Oxygen (0_2)	-182.9	-296	71.20	Hydrogen(H_2)	-252.7	-423	4.43
Argon (Ar)	-185.9	-303	87.40	Helium (He)	-268.9	-452	7.82
Carbon dioxide (CO_2)	-78.5	-109	50.60	Absolute zero	-273.16	-460	_

Velan reserves the right to change this information without notice. © 2013 Velan Inc. All rights reserved.

VELAN SPECIAL SERVICES

BLOCK AND BLEED GATE VALVES FOR CHEMICAL AND PETROCHEMICAL INDUSTRIES



Valve shown above has a special "Pipeline" bonnet. Standard bonnets with regular yoke also available.



CAST STEEL API 600* BLOCK AND BLEED GATE VALVES ASME CLASS 150, NPS 2–60 (DN 50–1500) ASME CLASS 300, NPS 2–36 (DN 50–900)

FLANGED OR BUTT WELD ENDS

DESIGN FEATURES

- **Positive shutoff** with visual or remote proof of seat tightness.
- **No product contamination** due to absolute tightness.
- **Dual seating.** Elastomer-to-metal seat plus metal-to-metal secondary seal.
- **Fire safe.** The metal-to-metal seat ensures tightness if the secondary elastomer seat is damaged during the fire.
- **PTFE seat insert** resists corrosive media, has high abrasion resistance, and operates up to +400°F (204°C).
- **Seat hardfaced** with SS 410 and seal welded.

EASY IN-LINE VALVE RESEATING

Seats are hardfaced with SS 410 and welded-in for lifetime service. A worn soft seat insert can easily be replaced after removal of the wedge from the body. Shut off flow and relieve pressure before replacing the seat insert.

SEAT/WEDGE DESIGN

STYLE A
NPS 2–12
(DN 50–300)

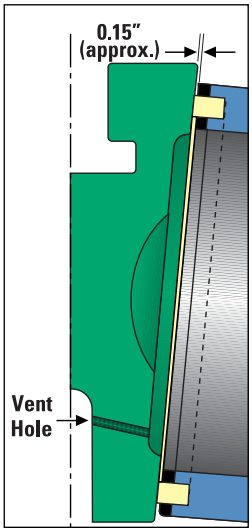

STYLE B*
NPS 14–60
(DN 350–1500)

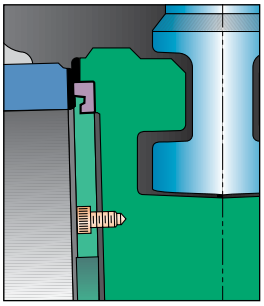

*NPS 14–24 (DN 350–600) may be STYLE A or B at manufacturer's option

SPECIFICATIONS FOR SEAT INSERT MATERIALS

TYPE	MAXIMUM OPERATING TEMP.	NOT RECOMMENDED
PTFE	-100 to +400°F -73 to +204°C	Fluorinated hydrocarbons
Buna-N	-20 to +200°F -29 to +93°C	Halogenated hydrocarbons, nitrobenzene, aniline, hydraulic fluids, skydrol, cellulube, pydrazil, acetone
Viton	-20 to +400°F -29 to +240°C	Acetone, anines, anhydrous ammonia, hot hydrofluoric acid, ester, ethers

CAVITY OVER-PRESSURIZATION PROTECTION

Block and bleed valves are capable of trapping fluid in the cavity between the seats when in the closed position. If subjected to an increase in temperature, an excessive build up of pressure can occur, which may result in a pressure boundary failure. It is the responsibility of the user to assure that measures are taken to prevent the pressure from exceeding the rating of the valve.

Cavity over-pressurization protection is not provided by Velan, unless specified. Velan can provide alternative solutions to safeguard against cavity over-pressurization. Please contact us to determine the correct solution for your use.

* *For gate valves larger than NPS 24 (DN 600), wall thickness is based on B16.34 plus additional wall thickness allowance.*

Velan reserves the right to change this information without notice. © 2013 Velan Inc. All rights reserved.

BYPASSES

AVAILABLE FOR ALL VELAN CAST STEEL VALVES IN ACCORDANCE WITH MSS-SP45 - SERIES A

API 600 GLOBE *(Note: Dimensions are in inches)*

SIZE		CLASS 150				CLASS 300				CLASS 600			
NPS	DN	Bypass	A	Elbow	B	Bypass	A	Elbow	B	Bypass	A	Elbow	B
3	80	1/2	13.00	1/2	6.38	1/2	11.50	1/2	6.13	1/2	13.00	1/2	8.25
4	100	1/2	13.00	1/2	7.50	1/2	16.50	1/2	7.00	1/2	15.00	1/2	9.50
6	150	3/4	11.13	3/4	11.00	3/4	14.75	3/4	11.00	3/4	13.00	3/4	11.00
8	200	3/4	11.50	3/4	14.00	3/4	13.00	3/4	14.00	3/4	13.00	3/4	11.25
10	250	1	18.00	1	14.88	1	18	1	15.00	—	—	—	—
12	300	1	18.00	1	19.00	1	18	1	18.00	—	—	—	—
14	350	1	18.00	1	19.50	1	18	1	19.50	—	—	—	—
16	400	1	18.00	1	24.00	1	18	1	24.00	—	—	—	—

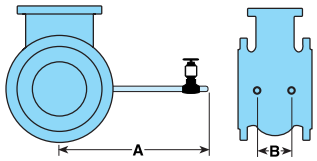

API 600 GATE *(Note: Dimensions are in inches)*

SIZE		CLASS 150				CLASS 300				CLASS 600			
NPS	DN	Bypass	A	Elbow	B	Bypass	A	Elbow	B	Bypass	A	Elbow	B
3	80	1/2	10.50	1/2	4.75	1/2	12.25	1/2	6.25	1/2	12.31	1/2	6.25
4	100	1/2	13.00	1/2	5.63	1/2	13.00	1/2	6.50	1/2	14.00	1/2	6.50
6	150	3/4	14.00	3/4	6.13	3/4	14.00	3/4	9.00	3/4	15.00	3/4	9.00
8	200	3/4	17.00	3/4	6.81	3/4	17.00	3/4	10.00	3/4	17.38	3/4	10.00
10	250	1	18.00	1	7.69	1	18.00	1	11.00	1	18.50	1	11.00
12	300	1	18.00	1	8.13	1	18.00	1	12.50	1	18.50	1	12.50
14	350	1	23.00	1	9.00	1	18.50	1	16.00	1	18.50	1	19.13
16	400	1	24.00	1	10.00	1	18.50	1	15.50	1	20.50	1	20.00
18	450	1	26.63	1	12.00	1	19.50	1	14.00	1	20.50	1	24.00
20	500	1	26.63	1	12.00	1	19.50	1	16.00	1	20.50	1	24.00
24	600	1	28.75	1	12.25	1	22.50	1	18.25	1	22.50	1	32.00
30	750	1	33.63	1	14.00	1	26.00	1	24.00	1	27.00	1	36.00
34	850	—	—	—	—	—	—	—	—	—	28.00	1	42.38
36	900	1	34.00	1	15.25	1	28.00	1	50.00	1	30.00	1	35.00
38	950	—	—	—	—	—	—	—	—	—	31.00	1	47.38
40	1000	—	—	—	—	—	32.00	—	45.00	—	32.00	1	50.50
42	1050	—	—	—	—	—	32.00	—	45.00	—	—	—	—
44	1100	—	—	—	—	—	—	—	—	—	35.00	—	50.00
50	1250	—	—	—	—	—	—	—	—	—	39.00	—	61.75
60	1500	1	44.00	1	24.00	—	—	—	—	—	—	—	—

FLANGES, WEIGHTS, AND Cv FLOW COFFICIENTS

API 600 CAST STEEL VALVES
CLASS 150
DRILLED AND FACED AS FOLLOWS
ASME B 16.5 and B16.47[1]

(Note: Dimensions are in inches and weights in pounds)

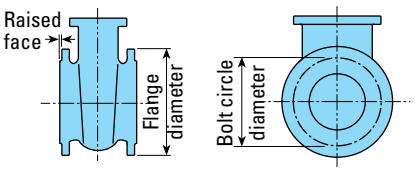

ASME CLASS	DIMENSIONS IN INCHES							WEIGHT IN LBS.						CV FLOW COEFFICIENTS		
	SIZE		FLANGE	BOLT CIRCLE	HOLE	QTY.	DIAM.	GATE		GLOBE		SWING				
	NPS	DN	DIAM.	DIAM.	DIAM.	HOLES	BOLTS	BW	FL	BW	FL	BW	FL	GATE	GLOBE	CHECK
150 1/16 RAISED FACE	2	50	6.00	4.75	0.75	4	5/8	42	48	48	55	31	40	260	35	95
	2 1/2	65	7.00	5.50	0.75	4	5/8	50	59	54	58	35	44	420	60	150
	3	80	7.50	6.00	0.75	4	5/8	67	78	82	102	59	78	625	92	220
	4	100	9.00	7.50	0.75	8	5/8	97	117	120	152	98	121	1150	180	410
	6	150	11.00	9.50	0.88	8	3/4	180	198	240	280	179	212	2650	430	950
	8	200	13.50	11.75	0.88	8	3/4	278	319	405	435	314	360	4850	810	1750
	10	250	16.00	14.25	1.00	12	7/8	456	515	500	550	513	586	7750	1400	2800
	12	300	19.00	17.00	1.00	12	7/8	646	738	1050	1200	602	823	11,500	1950	4100
	14	350	21.00	18.75	1.13	12	1	875	954	1700	1850	765	960	14,000	2500	6200
	16	400	23.50	21.25	1.13	16	1	1120	1200	2300	2500	1120	1300	19,000	3400	8400
	18	450	25.00	22.75	1.25	16	1 1/8	1485	1570	2640	2850	1450	1660	24,000	4500	11,000
	20	500	27.50	25.00	1.25	20	1 1/8	1825	1910	—	—	1700	2050	31,000	—	13,500
	24	600	32.00	29.50	1.38	20	1 1/4	2870	2960	7035	7403	2900	3300	45,000	6580	20,000
	26[1]	650	34.25	31.75	1.38	24	1 1/4	3600	3700	—	—	3600	4000	53,000	—	23,500
	28[1]	700	36.50	34.00	1.38	28	1 1/4	4400	4500	—	—	4300	5000	62,000	—	28,000
	30[1]	750	38.75	36.00	1.37	28	1 1/4	4705	4750	—	—	6300	7000	73,000	—	33,000
	32[1]	800	41.75	38.50	1.63	28	1 1/2	5800	6000	—	—	6000	6600	81,000	—	36,245
	34[1]	850	43.75	40.50	1.63	32	1 1/2	—	6000	—	—	—	—	92,500	—	—
	36[1]	900	46.00	42.75	1.63	32	1 1/2	6500	6850	—	—	8500	9500	108,000	—	48,000
	38[1]	950	48.75	45.25	1.63	32	1 1/2	8857	9674	—	—	—	—	115,000	—	—
	40[1]	1000	50.75	47.25	1.63	36	1 1/2	8400	9000	—	—	—	—	130,000	—	—
	42[1]	1050	53.00	49.50	1.63	36	1 1/2	10,000	11,000	—	—	—	—	142,000	—	—
	46[1]	1150	57.25	53.75	1.63	40	1 1/2	14,000	15,719	—	—	—	—	171,000	—	—
	48[1]	1200	59.50	56.00	1.63	44	1 1/2	14,000	15,000	—	—	—	—	190,000	—	—
	50[1]	1250	56.81	54.56	1.25	44	1 1/8	—	8775	—	—	—	—	198,000	—	—
	54[1]	1350	66.25	62.75	1.88	44	1 3/4	21,000	23,000	—	—	—	—	238,000	—	—
	56[1]	1400	68.75	65.00	1.88	48	1 3/4	—	20,000	—	—	—	—	260,000	—	—
	60[1]	1500	73.00	69.25	1.88	52	1 3/4	22,600	26,600	—	—	—	—	300,000	—	—
	64[1]	1600	—	—	—	—	—	—	29,043	—	—	—	—	340,000	—	—

(1) NPS 26 (DN 650) and up: ASME B16.47 Series A (MSS-SP– 44). For Series B (API 605) contact the factory.

Velan reserves the right to change this information without notice. © 2013 Velan Inc. All rights reserved.

FLANGES, WEIGHTS, AND Cv FLOW COFFICIENTS

API 600 CAST STEEL VALVES
CLASS 300, 600, 900, AND 1500
DRILLED AND FACED AS FOLLOWS
ASME B 16.5 and B16.47[1]

(Note: Dimensions are in inches and weights in pounds)

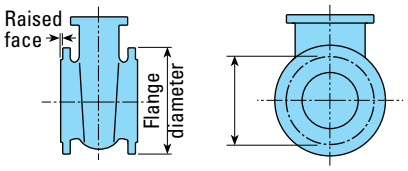

ASME CLASS	DIMENSIONS IN INCHES							WEIGHT IN LBS.						CV FLOW COEFFICIENTS		
	SIZE		FLANGE	BOLT CIRCLE	HOLE	QTY.	DIAM.	GATE		GLOBE		SWING				
	NPS	DN	DIAM.	DIAM.	DIAM.	HOLES	BOLTS	BW	FL	BW	FL	BW	FL	GATE	GLOBE	CHECK
300 1/16 RAISED FACE	2	50	6.50	5.00	0.75	8	5/8	46	60	45	60	37	45	260	35	95
	2 1/2	65	7.50	5.88	0.88	8	3/4	55	76	63	72	49	57	420	60	150
	3	80	8.25	6.62	0.88	8	3/4	90	115	88	114	70	96	625	92	220
	4	100	10.00	7.88	0.88	8	3/4	136	166	130	171	110	150	1150	180	410
	6	150	12.50	10.63	0.88	12	3/4	245	314	261	337	204	265	2650	430	950
	8	200	15.00	13.00	1.00	12	3/4	415	506	447	565	360	455	4850	810	1750
	10	250	17.50	15.25	1.13	16	1	646	762	1000	1150	582	650	7750	1325	2800
	12	300	20.50	17.75	1.25	16	1 1/8	900	1100	1300	1550	825	945	11,500	1950	4100
	14	350	23.00	20.25	1.25	20	1 1/8	1392	1720	1800	2100	1200	1350	14,000	2500	6200
	16	400	25.50	22.50	1.38	20	1 1/4	1870	2220	2300	2700	1500	1800	19,000	3400	8400
	18	450	28.00	24.75	1.38	24	1 1/4	2405	2960	2640	3200	2000	2400	23,500	4500	11,000
	20	500	30.50	27.00	1.38	24	1 1/4	3260	3700	—	—	2600	3000	30,000	—	13,500
	24	600	36.00	32.00	1.63	24	1 1/2	4250	5100	7109	7995	3000	4050	44,000	6580	20,000
	26[1]	650	38.25	34.50	1.75	28	1 5/8	5000	5500	—	—	—	—	53,000	—	—
	28[1]	700	40.75	37.00	1.75	28	1 5/8	7000	7500	—	—	5000	6000	62,000	—	28,000
	30[1]	750	43.00	39.25	1.88	28	1 3/4	8550	9000	—	—	—	—	73,000	—	—
	32[1]	800	45.25	41.50	2.00	28	1 7/8	8200	8800	—	—	—	—	81,000	—	—
	34[1]	850	—	—	—	—	—	—	—	—	—	8350	10,100	—	—	41,330
	36[1]	900	50.00	46.00	2.13	32	2	13,500	15,500	—	—	—	—	108,000	—	—
	40[1]	1000	48.75	45.50	1.75	32	1 5/8	14,500	16,200	—	—	—	—	129,500	—	—
	42[1]	1050	50.75	47.00	1.75	32	1 5/8	14,500	17,000	—	—	—	—	129,500	—	—
600 1/4 RAISED FACE	2	50	6.50	5.00	0.75	8	5/8	60	72	60	72	48	52	260	35	95
	2 1/2	65	7.50	5.88	0.88	8	3/4	89	102	89	100	59	87	420	60	150
	3	80	8.25	6.63	0.88	8	3/4	130	157	130	150	96	130	625	92	220
	4	100	10.75	8.50	1.00	8	7/8	224	275	213	285	167	225	1150	180	410
	6	150	14.00	11.50	1.13	12	1	394	540	415	515	332	476	2650	430	950
	8	200	16.50	13.75	1.25	12	1 1/8	726	884	1050	1220	525	715	4850	800	1750
	10	250	20.00	17.00	1.38	16	1 1/8	1125	1405	1550	1830	1000	1250	7750	1250	2800
	12	300	22.00	19.25	1.38	20	1 1/4	1490	1812	—	—	1500	1750	11,500	—	4100
	14	350	23.75	20.75	1.50	20	1 3/8	2200	2500	—	—	1750	2050	13,000	—	5900
	16	400	27.00	23.75	1.63	20	1 1/2	3000	3700	—	—	2400	3100	18,000	—	7800
	18	450	29.25	25.75	1.75	20	1 5/8	4000	4800	—	—	3200	4000	22,000	—	9900
	20	500	32.00	28.50	1.75	24	1 5/8	5600	6800	—	—	4500	6100	27,000	—	12,000
	24	600	37.00	33.00	2.00	24	1 7/8	8000	9800	—	—	6400	7600	40,000	—	18,000
	26	650	—	—	—	—	—	6835	8154	—	—	7600	8930	38,000	—	21,150
	30[1]	750	44.50	40.25	2.13	28	2	12,000	14,000	—	—	—	—	52,000	—	—
	34[1]	850	49.00	44.50	2.38	28	2 1/4	—	19,000	—	—	—	—	82,500	—	—
	36[1]	900	51.75	47.00	2.63	28	2 1/2	17,000	19,500	—	—	—	—	72,000	—	—
	38[1]	950	50.00	45.75	2.38	28	2 1/4	—	26,700	—	—	—	—	103,000	—	—
	40[1]	1000	52.00	45.75	2.38	32	2 1/4	—	33,200	—	—	—	—	115,000	—	—
	44[1]	1100	52.25	52.50	2.63	32	2 1/2	—	42,800	—	—	—	—	144,000	—	—
	50[1]	1250	65.75	60.00	3.13	28	3	—	59,100	—	—	—	—	190,000	—	—
900 1/4 RAISED FACE	2	50	8.50	6.50	1.00	8	7/8	150	185	68	150	135	165	230	45	80
	2 1/2	65	9.63	7.50	1.13	8	1	—	—	—	—	175	210	—	—	200
	3	80	9.50	7.50	1.00	8	7/8	235	270	165	225	175	210	560	100	200
	4	100	11.50	9.25	1.25	8	1 1/8	270	355	260	350	245	330	1050	190	380
	6	150	15.00	12.50	1.25	12	1 1/8	830	980	641	831	485	635	2400	430	875
	8	200	18.50	15.50	1.50	12	1 3/8	1220	1500	1278	1588	700	900	4200	760	1325
	10	250	21.50	18.50	1.50	16	1 3/8	2000	2400	—	—	1600	2100	6750	—	2400
	12	300	24.00	21.00	1.50	20	1 3/8	3170	3670	—	—	—	—	9700	—	—
	14	350	25.25	22.00	1.62	20	1 1/2	3900	4460	—	—	—	—	12,000	—	—
	16	400	27.75	24.25	1.75	20	1 5/8	5570	6250	—	—	—	—	16,000	—	—
	20	500	33.75	29.50	2.13	20	2	—	—	—	—	5961	7081	—	—	11177
	32	800	51.75	45.50	3.38	20	3 1/4	—	—	—	—	13674	18368	—	—	24036
	38	950	—	—	—	—	—	—	—	—	—	20,250	26,800	—	—	34,500
1500 1/4 RAISED FACE	2	50	8.50	6.50	1.00	8	7/8	150	185	68	150	135	165	230	45	80
	2 1/2	65	9.63	7.50	1.13	8	1	—	—	—	—	205	275	—	—	185
	3	80	10.50	8.00	1.25	8	1 1/8	255	325	188	274	205	275	510	90	185
	4	100	12.25	9.50	1.37	8	1 1/4	430	520	—	—	340	430	925	—	330
	6	125	15.50	12.50	1.50	12	1 3/8	1045	1205	—	—	805	965	2100	—	750
	8	200	19.00	15.50	1.75	12	1 5/8	1850	2550	—	—	1350	2050	3650	—	1325
	10	250	23.00	19.00	2.00	12	1 7/8	2600	3300	—	—	2233	2821	5850	—	2103

(1) NPS 26 (DN 650) and up: ASME B16.47 Series A (MSS-SP– 44). For Series B (API 605) contact the factory.

Velan reserves the right to change this information without notice. © 2013 Velan Inc. All rights reserved.

PRESSURE-TEMPERATURE RATINGS – °F

STANDARD CLASS VALVES FLANGED AND BUTT WELD END

NOTE: FOR SPECIAL CLASS VALVES, WITH HIGHER RATINGS CONTACT THE COMPANY.

CAST ASTM MATERIAL STANDARD – TO ASME B16.34

ASME Boiler and Pressure Vessel Code Section II materials that also meet the requirements of the listed ASTM specifications.

psig/°F (bar/°C) Classes 150–4500

A 216 Gr. WCB (1)

TEMP. °F	WORKING PRESSURES BY CLASS, psig						
	150	300	600	900	1500	2500	4500
–20 to 100	285	740	1,480	2,220	3,705	6,170	11,110
200	260	680	1,360	2,035	3,395	5,655	10,185
300	230	655	1,310	1,965	3,270	5,450	9,815
400	200	635	1,265	1,900	3,170	5,280	9,505
500	170	605	1,205	1,810	3,015	5,025	9,040
600	140	570	1,135	1,705	2,840	4,730	8,515
650	125	550	1,100	1,650	2,745	4,575	8,240
700	110	530	1,060	1,590	2,665	4,425	7,960
750	95	505	1,015	1,520	2,535	4,230	7,610
800	80	410	825	1,235	2,055	3,430	6,170
850	65	320	640	955	1,595	2,655	4,785
900	50	230	460	690	1,150	1,915	3,455
950	35	135	275	410	685	1,145	2,055
1,000	20	85	170	255	430	715	1,285

A 217 Gr.WC6 (3) (4) (5)

TEMP. °F	WORKING PRESSURES BY CLASS, psig						
	150	300	600	900	1500	2500	4500
–20 to 100	290	750	1,500	2,250	3,750	6,250	11,250
200	260	750	1,500	2,250	3,750	6,250	11,250
300	230	720	1,445	2,165	3,610	6,015	10,830
400	200	695	1,385	2,080	3,465	5,775	10,400
500	170	665	1,330	1,995	3,325	5,540	9,965
600	140	605	1,210	1,815	3,025	5,040	9,070
650	125	590	1,175	1,765	2,940	4,905	8,825
700	110	570	1,135	1,705	2,840	4,730	8,515
750	95	530	1,065	1,595	2,660	4,430	7,970
800	80	510	1,015	1,525	2,540	4,230	7,610
850	65	485	975	1,460	2,435	4,060	7,305
900	50	450	900	1,350	2,245	3,745	6,740
950	35	320	640	955	1,595	2,655	4,785
1,000	20	215	430	650	1,080	1,800	3,240
1,050	20(a)	145	290	430	720	1,200	2,160
1,100	20(a)	95	190	290	480	800	1,440
1,150	20(a)	65	130	195	325	545	975
1,200	15(a)	40	80	125	205	345	615

(a) Flanged-end valve ratings terminate at 1,000°F.

A217 Gr. WC9 (3) (4) (5)

TEMP. °F	WORKING PRESSURES BY CLASS, psig						
	150	300	600	900	1500	2500	4500
–20 to 100	290	750	1,500	2,250	3,750	6,250	11,250
200	260	750	1,500	2,250	3,750	6,250	11,250
300	230	730	1,455	2,185	3,640	6,070	10,925
400	200	705	1,410	2,115	3,530	5,880	10,585
500	170	665	1,330	1,995	3,325	5,540	9,965
600	140	605	1,210	1,815	3,025	5,040	9,070
650	125	590	1,175	1,765	2,940	4,905	8,825
700	110	570	1,135	1,705	2,840	4,730	8,515
750	95	530	1,065	1,595	2,660	4,430	7,970
800	80	510	1,015	1,525	2,540	4,230	7,610
850	65	485	975	1,460	2,435	4,060	7,305
900	50	450	900	1,350	2,245	3,745	6,740
950	35	385	755	1,160	1,930	3,220	5,795
1,000	20	265	535	800	1,335	2,230	4,010
1,050	20(a)	175	350	525	875	1,455	2,625
1,100	20(a)	110	220	330	550	915	1,645
1,150	20(a)	70	135	205	345	570	1,030
1,200	15(a)	40	80	125	205	345	615

(a) Flanged-end valve ratings terminate at 1,000°F.

A 217 Gr. C5 (3) (5)

TEMP. °F	WORKING PRESSURES BY CLASS, psig						
	150	300	600	900	1500	2500	4500
-20 to 100	290	750	1,500	2,250	3,750	6,250	11,250
200	260	750	1,500	2,250	3,750	6,250	11,250
300	230	730	1,455	2,185	3,640	6,070	10,925
400	200	705	1,410	2,115	3,530	5,880	10,585
500	170	665	1,330	1,995	3,325	5,540	9,965
600	140	605	1,210	1,815	3,025	5,040	9,070
650	125	590	1,175	1,765	2,940	4,905	8,825
700	110	570	1,135	1,705	2,840	4,730	8,515
750	95	530	1,065	1,595	2,660	4,430	7,970
800	80	510	1,015	1,525	2,540	4,230	7,610
850	65	485	975	1,460	2,435	4,060	7,305
900	50	375	745	1,120	1,870	3,115	5,605
950	35	275	550	825	1,370	2,285	4,115
1,000	20	200	400	595	995	1,655	2,985
1,050	20(a)	145	290	430	720	1,200	2,160
1,100	20(a)	100	200	300	495	830	1,490
1,150	20(a)	60	125	185	310	515	925
1,200	15(a)	35	70	105	170	285	515

(a) Flanged-end valve ratings terminate at 1,000°F.

A 217 Gr. C12 (3) (5)

TEMP. °F	WORKING PRESSURES BY CLASS, psig						
	150	300	600	900	1500	2500	4500
–20 to 100	290	750	1,500	2,250	3,750	6,250	11,250
200	260	750	1,500	2,250	3,750	6,250	11,250
300	230	730	1,455	2,185	3,640	6,070	10,925
400	200	705	1,410	2,115	3,530	5,880	10,585
500	170	665	1,330	1,995	3,325	5,540	9,965
600	140	605	1,210	1,815	3,025	5,040	9,070
650	125	590	1,175	1,765	2,940	4,905	8,825
700	110	570	1,135	1,705	2,840	4,730	8,515
750	95	530	1,065	1,595	2,660	4,430	7,970
800	80	510	1,015	1,525	2,540	4,230	7,610
850	65	485	975	1,460	2,435	4,060	7,305
900	50	450	900	1,350	2,245	3,745	6,740
950	35	375	755	1,130	1,885	3,145	5,655
1,000	20	255	505	760	1,270	2,115	3,805
1,050	20(a)	170	345	515	855	1,430	2,570
1,100	20(a)	115	225	340	565	945	1,695
1,150	20(a)	75	150	225	375	630	1,130
1,200	20(a)	50	105	155	255	430	770

(a) Flanged-end valve ratings terminate at 1,000°F.

A 351 Gr. CF8M (6)

TEMP. °F	WORKING PRESSURES BY CLASS, psig						
	150	300	600	900	1500	2500	4500
–20 to 100	275	720	1,440	2,160	3,600	6,000	10,800
200	235	620	1,240	1,860	3,095	5,160	9,290
300	215	560	1,120	1,680	2,795	4,660	8,390
400	195	515	1,025	1,540	2,570	4,280	7,705
500	170	480	955	1,435	2,390	3,980	7,165
600	140	450	900	1,355	2,255	3,760	6,770
650	125	440	885	1,325	2,210	3,680	6,625
700	110	435	870	1,305	2,170	3,620	6,515
750	95	425	855	1,280	2,135	3,560	6,410
800	80	420	845	1,265	2,110	3,520	6,335
850	65	420	835	1,255	2,090	3,480	6,265
900	50	415	830	1,245	2,075	3,460	6,230
950	35	385	775	1,160	1,930	3,220	5,795
1,000	20	365	725	1,090	1,820	3,030	5,450
1,050	20	360	720	1,080	1,800	3,000	5,400
1,100	20(a)	305	610	915	1,525	2,545	4,575
1,150	20(a)	235	475	710	1,185	1,970	3,550
1,200	20(a)	185	370	555	925	1,545	2,775
1,250	20(a)	145	295	440	735	1,230	2,210
1,300	20(a)	115	235	350	585	970	1,750
1,350	20(a)	95	190	290	480	800	1,440
1,400	20(a)	75	150	225	380	630	1,130
1,450	20(a)	60	115	175	290	485	875
1,500	15(a)	40	85	125	205	345	620

(a) Flanged-end valve ratings terminate at 1,000°F.

A 351 Gr. CF3M (7)

TEMP. °F	WORKING PRESSURES BY CLASS, psig						
	150	300	600	900	1500	2500	4500
–20 to 100	230	600	1,200	1,800	3,000	5,000	9,000
200	195	510	1,020	1,535	2,555	4,260	7,670
300	175	455	910	1,370	2,280	3,800	6,840
400	160	420	840	1,260	2,100	3,500	6,300
500	150	395	785	1,180	1,970	3,280	5,905
600	140	370	745	1,115	1,860	3,100	5,580
650	125	365	730	1,095	1,825	3,040	5,470
700	110	360	720	1,080	1,800	3,000	5,400
750	110	355	705	1,060	1,765	2,940	5,290
800	80	345	690	1,035	1,730	2,880	5,185
850	65	340	675	1,015	1,690	2,820	5,075

General Notes:

(1) Upon prolonged exposure to temperatures above 800°F, the carbide phase of steel may be converted to graphite. Permissible, but not recommended for prolonged use above 800°F.

(3) Use normalized and tempered material only.

(4) Not to be used over 1,100°F.

(5) The deliberate addition of any element not listed in ASTM A 217, Table 1, is prohibited, except that Ca and Mg may be added for deoxidation.

(6) At temperatures over 1,000°F, use only when the carbon content is 0.04% or higher.

(7) Not to be used over 800°F.

Velan reserves the right to change this information without notice. © 2013 Velan Inc. All rights reserved.

PRESSURE-TEMPERATURE RATINGS – °C

STANDARD CLASS VALVES FLANGED AND BUTT WELD END

NOTE: FOR SPECIAL CLASS VALVES, WITH HIGHER RATINGS CONTACT THE COMPANY.

CAST ASTM MATERIAL STANDARD – TO ASME B16.34
ASME Boiler and Pressure Vessel Code Section II materials that also meet the requirements of the listed ASTM specifications.
psig/°F (bar/°C) Classes 150–4500

A216 Gr. WCB (1)

TEMP. °C	WORKING PRESSURES BY CLASS, bar						
	150	300	600	900	1500	2500	4500
–29 to 38	19.6	51.1	102.1	153.2	255.3	425.5	765.9
50	19.2	50.1	100.2	150.4	250.6	417.7	751.9
100	17.7	46.6	93.2	139.8	233.0	388.3	699.0
150	15.8	45.1	90.2	135.2	225.4	375.6	676.1
200	13.8	43.8	87.6	131.4	219.0	365.0	657.0
250	12.1	41.9	83.9	125.8	209.7	349.5	629.1
300	10.2	39.8	79.6	119.5	199.1	331.8	597.3
325	9.3	38.7	77.4	116.1	193.6	322.6	580.7
350	8.4	37.6	75.1	112.7	187.8	313.0	563.5
375	7.4	36.4	72.7	109.1	181.8	303.1	545.5
400	6.5	34.7	69.4	104.2	173.6	289.3	520.8
425	5.5	28.8	57.5	86.3	143.8	239.7	431.5
450	4.6	23.0	46.0	69.0	115.0	191.7	345.1
475	3.7	17.4	34.9	52.3	87.2	145.3	261.5
500	2.8	11.8	23.5	35.3	58.8	97.9	176.3
538	1.4	5.9	11.8	17.7	29.5	49.2	88.6

A 217 Gr.WC6 (3) (4) (5)

TEMP. °C	WORKING PRESSURES BY CLASS, bar						
	150	300	600	900	1500	2500	4500
–29 to 38	19.8	51.7	103.4	155.1	258.6	430.9	775.7
50	19.5	51.7	103.4	155.1	258.6	430.9	775.7
100	17.7	51.5	103	154.4	257.4	429	772.2
150	15.8	49.7	99.5	149.2	248.7	414.5	746.2
200	13.8	48	95.9	143.9	239.8	399.6	719.4
250	12.1	46.3	92.7	139	231.8	386.2	694.8
300	10.2	42.9	85.7	128.6	214.4	357.1	642.6
325	9.3	41.4	82.6	124	206.6	344.3	619.6
350	8.4	40.3	80.4	120.7	201.1	335.3	603.3
375	7.4	38.9	77.6	116.5	194.1	323.2	581.8
400	6.5	36.5	73.3	109.8	183.1	304.9	548.5
425	5.5	35.2	70	105.1	175.1	291.6	524.7
450	4.6	33.7	67.7	101.4	169	281.8	507
475	3.7	31.7	63.4	95.1	158.2	263.9	474.8
500	2.8	25.7	51.5	77.2	128.6	214.4	385.9
538	1.4	14.9	29.8	44.7	74.5	124.1	223.4
550	1.4(a)	12.7	25.4	38.1	63.5	105.9	190.6
575	1.4(a)	8.8	17.6	26.4	44	73.4	132
600	1.4(a)	6.1	12.2	18.3	30.5	50.9	91.6
625	1.4(a)	4.3	8.5	12.8	21.3	35.5	63.9
650	1.1(a)	2.8	5.7	8.5	14.2	23.6	42.6

(a) Flanged-end valve ratings terminate at 538°C.

A217 Gr. WC9 (3) (4) (5)

TEMP. °C	WORKING PRESSURES BY CLASS, bar						
	150	300	600	900	1500	2500	4500
–29 to 38	19.8	51.7	103.4	155.1	258.6	430.9	775.7
50	19.5	51.7	103.4	155.1	258.6	430.9	775.7
100	17.7	51.5	103	154.6	257.6	429.4	773
150	15.8	50.3	100.3	150.6	250.8	418.2	752.8
200	13.8	48.6	97.2	145.8	243.4	405.4	729.8
250	12.1	46.3	92.7	139	231.8	386.2	694.8
300	10.2	42.9	85.7	128.6	214.4	357.1	642.6
325	9.3	41.4	82.6	124	206.6	344.3	619.6
350	8.4	40.3	80.4	120.7	201.1	335.3	603.3
375	7.4	38.9	77.6	116.5	194.1	323.2	581.8
400	6.5	36.5	73.3	109.8	183.1	304.9	548.5
425	5.5	35.2	70	105.1	175.1	291.6	524.7
450	4.6	33.7	67.7	101.4	169	281.8	507
475	3.7	31.7	63.4	95.1	158.2	263.9	474.8
500	2.8	28.2	56.5	84.7	140.9	235	423
538	1.4	18.4	36.9	55.3	92.2	153.7	276.6
550	1.4(a)	15.6	31.3	46.9	78.2	130.3	234.5
575	1.4(a)	10.5	21.1	31.6	52.6	87.7	157.9
600	1.4(a)	6.9	13.8	20.7	34.4	57.4	103.3
625	1.4(a)	4.5	8.9	13.4	22.3	37.2	66.9
650	1.1(a)	2.8	5.7	8.5	14.2	23.6	42.6

(a) Flanged-end valve ratings terminate at 538°C.

A 217 Gr. C5 (3) (5)

TEMP. °C	WORKING PRESSURES BY CLASS, bar						
	150	300	600	900	1500	2500	4500
–29 to 38	20	51.7	103.4	155.1	258.6	430.9	775.7
50	19.5	51.7	103.4	155.1	258.6	430.9	775.7
100	17.7	51.5	103	154.6	257.6	429.4	773
150	15.8	50.3	100.3	150.6	250.8	418.2	752.8
200	13.8	48.6	97.2	145.8	243.4	405.4	729.8
250	12.1	46.3	92.7	139	231.8	386.2	694.8
300	10.2	42.9	85.7	128.6	214.4	357.1	642.6
325	9.3	41.4	82.6	124	206.6	344.3	619.6
350	8.4	40.3	80.4	120.7	201.1	335.3	603.3
375	7.4	38.9	77.6	116.5	194.1	323.2	581.8
400	6.5	36.5	73.3	109.8	183.1	304.9	548.5
425	5.5	35.2	70	105.1	175.1	291.6	524.7
450	4.6	33.7	67.7	101.4	169	281.8	507
475	3.7	27.9	55.7	83.6	139.3	232.1	417.8
500	2.8	21.4	42.8	64.1	106.9	178.2	320.7
538	1.4	13.7	27.4	41.1	68.6	114.3	205.7
550	1.4(a)	12	24.1	36.1	60.2	100.4	180.7
575	1.4(a)	8.9	17.8	26.7	44.4	74	133.3
600	1.4(a)	6.2	12.5	18.7	31.2	51.9	93.5
625	1.4(a)	4	8	12	20	33.3	59.9
650	0.9(a)	2.4	4.7	7.1	11.8	19.7	35.5

(a) Flanged-end valve ratings terminate at 538°C.

A 217 Gr. C12 (3)(5)

TEMP. °C	WORKING PRESSURES BY CLASS, bar						
	150	300	600	900	1500	2500	4500
–29 to 38	20	51.7	103.4	155.1	258.6	430.9	775.7
50	19.5	51.7	103.4	155.1	258.6	430.9	775.7
100	17.7	51.5	103	154.6	257.6	429.4	773
150	15.8	50.3	100.3	150.6	250.8	418.2	752.8
200	13.8	48.6	97.2	145.8	243.4	405.4	729.8
250	12.1	46.3	92.7	139	231.8	386.2	694.8
300	10.2	42.9	85.7	128.6	214.4	357.1	642.6
325	9.3	41.4	82.6	124	206.6	344.3	619.6
350	8.4	40.3	80.4	120.7	201.1	335.3	603.3
375	7.4	38.9	77.6	116.5	194.1	323.2	581.8
400	6.5	36.5	73.3	109.8	183.1	304.9	548.5
425	5.5	35.2	70	105.1	175.1	291.6	524.7
450	4.6	33.7	67.7	101.4	169	281.8	507
475	3.7	31.7	63.4	95.1	158.2	263.9	474.8
500	2.8	28.2	56.5	84.7	140.9	235	423
538	1.4	17.5	35	52.5	87.5	145.8	262.4
550	1.4(a)	15	30	45	75	125	225
575	1.4(a)	10.5	20.9	31.4	52.3	87.1	156.8
600	1.4(a)	7.2	14.4	21.5	35.9	59.8	107.7
625	1.4(a)	5	9.9	14.9	24.8	41.4	74.5
650	1.4(a)	3.5	7.1	10.6	17.7	29.5	53.2

(a) Flanged-end valve ratings terminate at 538°C.

A 351 Gr. CF8M (6)

TEMP. °C	WORKING PRESSURES BY CLASS, bar						
	150	300	600	900	1500	2500	4500
–29 to 38	19	49.6	99.3	148.9	248.2	413.7	744.6
50	18.4	48.1	96.2	144.3	240.6	400.9	721.7
100	16.2	42.2	84.4	126.6	211	351.6	632.9
150	14.8	38.5	77	115.5	192.5	320.8	577.4
200	13.7	35.7	71.3	107	178.3	297.2	534.9
250	12.1	33.4	66.8	100.1	166.9	278.1	500.6
300	10.2	31.6	63.2	94.9	158.1	263.5	474.3
325	9.3	30.9	61.8	92.7	154.4	257.4	463.3
350	8.4	30.3	60.7	91	151.6	252.7	454.9
375	7.4	29.9	59.8	89.6	149.4	249	448.2
400	6.5	29.4	58.9	88.3	147.2	245.3	441.6
425	5.5	29.1	58.3	87.4	145.7	242.9	437.1
450	4.6	28.8	57.7	86.5	144.2	240.4	432.7
475	3.7	28.7	57.3	86	143.4	238.9	430.1
500	2.8	28.2	56.5	84.7	140.9	235	423
538	1.4	25.2	50	75.2	125.5	208.9	375.8
550	1.4(a)	25	49.8	74.8	124.9	208	374.2
575	1.4(a)	24	47.9	71.8	119.7	199.5	359.1
600	1.4(a)	19.9	39.8	59.7	99.5	165.9	298.6
625	1.4(a)	15.8	31.6	47.4	79.1	131.8	237.2
650	1.4(a)	12.7	25.3	38	63.3	105.5	189.9
675	1.4(a)	10.3	20.6	31	51.6	86	154.8
700	1.4(a)	8.4	16.8	25.1	41.9	69.8	125.7
725	1.4(a)	7	14	21	34.9	58.2	104.8
750	1.4(a)	5.9	11.7	17.6	29.3	48.9	87.9
775	1.4(a)	4.6	9	13.7	22.8	38	68.4
800	1.2(a)	3.5	7	10.5	17.4	29.2	52.6
816	1.0(a)	2.8	5.9	8.6	14.1	23.8	42.7

(a) Flanged-end valve ratings terminate at 538°C.

A 351 Gr. CF3M (7)

TEMP. °C	WORKING PRESSURES BY CLASS, bar						
	150	300	600	900	1500	2500	4500
–29 to 38	15.9	41.4	82.7	124.1	206.8	344.7	620.5
50	15.3	40	80	120.1	200.1	333.5	600.3
100	13.3	34.8	69.6	104.4	173.9	289.9	521.8
150	12	31.4	62.8	94.2	157	261.6	470.9
200	11.2	29.2	58.3	87.5	145.8	243	437.3
250	10.5	27.5	54.9	82.4	137.3	228.9	412
300	10	26.1	52.1	78.2	130.3	217.2	391
325	9.3	25.5	51	76.4	127.4	212.3	382.2
350	8.4	25.1	50.1	75.2	125.4	208.9	376.1
375	7.4	24.8	49.5	74.3	123.8	206.3	371.3
400	6.5	24.3	48.6	72.9	121.5	202.5	364.6
425	5.5	23.9	47.7	71.6	119.3	198.8	357.9
450	4.6	23.4	46.8	70.2	117.1	195.1	351.2

General Notes:

(1) Upon prolonged exposure to temperatures above 425°C, the carbide phase of steel may be converted to graphite. Permissible, but not recommended for prolonged use above 425°C.

(3) Use normalized and tempered material only.

(4) Not to be used over 595°C.

(5) The deliberate addition of any element not listed in ASTM A 217, Table 1, is prohibited, except that Ca and Mg may be added for deoxidation.

(6) At temperatures over 538°C, use only when the carbon content is 0.04% or higher.

(7) Not to be used over 425°C.

Velan reserves the right to change this information without notice. © 2013 Velan Inc. All rights reserved.

SPECIFICATION OF CAST VALVE MATERIALS

BODY AND BONNET, WEDGE–DISC–PACKING FLANGE

DESCRIPTION		CARBON STEEL			ALLOY STEEL				STAINLESS STEEL				
					1¼Cr-½Mo	2¼Cr-1Mo	5Cr	9Cr-1Mo	13Cr		316	316L	304
ASTM DESIGNATION		A216 WCB	A352 LCB	A352 LCC	A217 WC6	A217 WC9	A217 C5	A217 C12	A217 CA15	A296 CA40	A351 CF8M	A351 CF3M	A351 CF8
COMPOSITION %	Carbon	0.25(1)	0.25(1)	0.25	0.20	0.18	0.20	0.20	0.15	0.10-0.40	0.08	0.03	0.08
	Manganese	1.00	1.00	1.20	0.50-0.80	0.40-0.70	0.40-0.70	0.35-0.65	1.00	1.00	1.50	1.50	1.50
	Phosphorus	0.04	0.04	0.04	0.04	0.40	0.04	0.04	0.04	0.04	0.04	0.04	0.04
	Sulphur	0.045	0.045	0.045	0.045	0.045	0.045	0.045	0.040	0.040	0.040	0.040	0.040
	Silicon	0.60	0.60	0.60	0.60	0.60	0.75	1.00	1.50	1.50	1.50	1.50	2.00
	Nickel	0.50	—	0.50	0.50	0.50	0.50	0.50	1.00	1.00	9.00-12.00	9.00-13.00	8.00-11.00
	Chromium	0.50	—	0.50	1.00-1.50	2.00-2.75	4.00-6.50	8.00-10.00	11.5-14.0	11.5-14.0	18.00-21.00	17.00-21.00	18.00-21.00
	Molybdenum	0.20	—	0.20	0.45-0.65	0.90-1.20	0.45-0.65	0.90-1.20	0.50	0.50	2.0-3.00	2.0-3.00	0.50
	Copper	0.30	0.30	0.30	0.50	—	0.50	0.50	—	—	—	—	—
Heat treatment		Anneal	Quench and temper		Temper				Solution anneal				
Tensile psi min.		70,000	65,000-90,000	70,000-95,000	70,000-90,000		90,000-115,000		90,000-115,000	100,000	70,000	70,000	70,000
Yield psi min.		36,000	35,000	40,000	40,000	40,000	60,000	60,000	65,000	70,000	30,000	30,000	30,000
Elongation % min.		22	24	22	20	20	18	18	18	15	30	30	35
Reduction of area % min.		35	35	35	35	35	35	35	30	25	—	—	—
Hardness HB		187 max.	197 max.	200 max.	207 max.	207 max.	241 max.	241 max.	327-381	475 min.	—	187 max.	—
Parts		BODIES–BONNETS–LARGE DISCS							DISC MATERIALS		BODIES–BONNETS–DISCS		

(1) Velan standard: 0.25 or less.

TRIM SPECIFICATION

ASTM DESIGNATION		BAR STOCK								CAST		
		13Cr		Stainless steels			Monel		Hastelloy	Monel	CoCr alloy	Austenitic ductile
		A479 410*	A582 416*	A 479 316 St. Hard.	A479 316	A564 630	B164 Monel	AMS 4676D K-Monel	B574 N 10276	A494 M-25S	AMS 5387 A	A439 D-2C
COMPOSITION %	Carbon	0.15	0.15	0.08	0.08	0.07	0.3	0.25	0.010	0.25	0.9–1.4	2.90
	Manganese	1.00	1.25	2.00	2.00	1.00	2.0	1.50	1.0	1.50	1.0	1.80–2.40
	Phosphorus	0.040	0.06	0.045	0.045	0.040	–	0.02	0.04	0.03	0.04	0.08
	Sulphur	0.030	0.15 min.	0.030	0.030	0.030	0.024	0.010	0.03	0.03	0.04	–
	Silicon	1.00	1.00	1.00	1.00	1.00	0.5	1.00	0.08	3.5–4.5	1.5	1.00–3.00
	Nickel	–	–	10.00–14.00	10.00–14.00	3.00–5.00	63.0	63.00–70.00	Balance	Balance	3.0	1.00–24.00
	Chromium	11.50–13.50	12.00–14.00	16.00–18.00	16.00–18.00	15.00–17.50	–	–	14.5–16.5	–	27.0–31.0	0.50
	Molybdenum	–	–	2.00–3.00	2.00–3.00	–	–	–	15.0–17.0	–	1.5	–
	Copper	–	–	–	–	3.00–5.00	28.0–34.0	Balance	–	27.0–33.0	–	–
	Aluminum	–	–	–	–	–	3.00	–	3.00	–	–	–
	Cobalt	–	–	–	–	–	–	–	–	–	Balance	–
	Tungsten	–	–	–	–	–	–	–	–	–	3.5-5.5	–
	Iron	–	–	–	–	–	–	–	–	3.50	3.0	–
Special condition		Temper	Hard	Level 2	–	–	Hot worked	Hot finished	–	Age hardened	–	–
Heat treatment		Class 2	Hard temper	Solution annealed	Solution annealed	H 1100	–	–	–	–	–	–
Tensile psi min.		110,000	–	95,000	75,000	140,000	80,000	140,000	100,000	–	130,000	58,000
Yield psi min.		85,000	–	75,000	30,000	115,000	40,000	100,000	41,000	–	–	28,000
Elongation % min.		15	–	25	30	14	30	20	40	–	1	20
Reduction of area % min.		45	–	40	40	45	–	–	–	–	–	–
Hardness HB		269 max.	293–352	–	–	302 min.	–	326 min.	–	300 min.	344 min.	121–171

* *13Cr or Monel trim also available in soft form (less than 237 HB). Non-cobalt hardfacing also available.*

SOUR SERVICE VALVES

Where NACE or sour service is specified, valves comply with NACE MR0103 or MR0175 / ISO15156. It is the end user's responsibility to install the valves in the service conditions permitted by these standards.

For trim material (wedge/disc surface, seat surface, and stem) see page 35.

TRIM	
NA, ND, NE, NF:	B7M / 2HM Rc. 22 Max.
NB, NC, NN:	B7M / 2HM, B8M / 8 or Rc. 22 Max.

** CoCr alloy as used throughout this catalog refers to cobalt chrome hardfacing alloys as supplied by Kennametal Stellite, and other approved manufacturers.*

 Velan reserves the right to change this information without notice. © 2013 Velan Inc. All rights reserved.

HOW TO ORDER

CAST STEEL GATE, GLOBE, AND CHECK VALVES

TYPE OF CONNECTION	SIZE OF CONNECTION			PRESSURE RATING	TYPE		BODY/BONNET STYLE			BODY MATERIAL		TRIM MATERIAL	
A	B			C	D		E			F		G	
e.g.: F	1	0	—	0	0	6	4	C	—	0	2	T	Y

Example: *Flanged NPS 3 (DN 80) Class 150 cast carbon steel full bore gate valve with TY trim.*

The figure numbers shown on this key are designed to cover essential features of Velan valves.
Please use figure numbers to ensure prompt and accurate processing of your order.
A detailed description must accompany any special orders.

A TYPE OF CONNECTION

A - Special
B - Butt weld
C - Combination
D - DIN flanged
E - Welded studs (butt weld)
F - Flanged B16.5 (B16.47 series A)
P - Flanged B16.47 series B (API 605)
R - Flanged ring joint
U - Undrilled flanges

B SIZE OF CONNECTION

Customers have the choice of specifying valve size as part of the valve figure number (**B**) using the numbers below, or indicating valve size separately. Size below shows NPS (DN)

EXAMPLES:
F**10**-0064C-02TY (valve size is part of figure number)
3 (80) F-0064C-02TY (valve size is shown separately)

08 - 2 (50)	**18** - 12 (300)	**30** - 30 (750)	**48** - 48 (1200)
09 - 2½ (65)	**19** - 14 (350)	**32** - 32 (800)	**50** - 50 (1250)
10 - 3 (80)	**20** - 16 (400)	**34** - 34 (850)	**54** - 54 (1350)
11 - 3½ (90)	**21** - 18 (450)	**36** - 36 (900)	**56** - 56 (1400)
12 - 4 (100)	**22** - 20 (500)	**38** - 38 (950)	**60** - 60 (1500)
13 - 5 (125)	**23** - 22 (550)	**40** - 40 (1000)	**64** - 64 (1600)
14 - 6 (150)	**24** - 24 (600)	**42** - 42 (1050)	**99** - Special
15 - 8 (200)	**26** - 26 (650)	**44** - 44 (1100)	
16 - 10 (250)	**28** - 28 (700)	**46** - 46 (1150)	

C PRESSURE RATING

0 - 150
1 - 300
2 - 600
3 - 1500
7 - 900
X - Butt weld (intermediate class)

D VALVE TYPE

01 - Flow control
06 - Full port gate
07 - Stop globe
08 - Stop check
09 - Needle
11 - API 594 swing check
99 - Special

E BODY / BONNET STYLE

4 - Vertical

A - Special
C - Bolted bonnet (cast)
E - Extended bonnet (cryogenic)
V - Cast bolted bonnet bellows seal

F BODY MATERIAL

01 - Special	**09** - C12	**19** - Monel M35	**31** - LCC
02 - WCB	**11** - CF8	**23** - Alloy 20	**34** - C12A (F91)
03 - WC1	**12** - CF3	**25** - LCB	**38** - LC1
04 - C5	**13** - CF8M	**27** - LC3	**39** - LC2
05 - WC6	**14** - CF3M	**28** - CG8M	**46** - GS-C25N
06 - WC9	**15** - CF8C	**29** - CG3M	

G TRIM

CODE		WEDGE/DISC SURFACE[1]	SEAT SURFACE[1]	STEM	API Number	*If applicable* BELLOWS[2]
MS	STANDARD	CoCr alloy[3]	CoCr alloy[3]	316		321
MY	STANDARD	CF8M or 316	CoCr alloy[3]	316	12	321
TS	STANDARD	CoCr alloy[3]	CoCr alloy[3]	13Cr (410)[4]	5	321
TY	STANDARD	13Cr (410 or CA15)	CoCr alloy[3]	13Cr (410)	8	
NA	NACE SERVICE[6]	13Cr (410 or CA15) HRC 22 max	CoCr alloy[3]	13Cr (410) HRC 22 max.	8[6]	
NB	NACE SERVICE[6]	CF8M	CoCr alloy[3]	316	12[6]	321
NC	NACE SERVICE[6]	Monel	CoCr alloy[3]	Monel	11[6]	Hastelloy C
ND	NACE SERVICE[6]	CoCr alloy[3]	CoCr alloy[3]	630 (H1150M)		
NE	NACE SERVICE[6]	CoCr alloy[3]	CoCr alloy[3]	13Cr (410) HRC 22 max.	5[6]	
NF	NACE SERVICE[6]	CoCr alloy[3]	CoCr alloy[3]	Same as Body		
NG	NACE SERVICE[6]	CoCr alloy[3]	CoCr alloy[3]	316		321
NN	NACE SERVICE[6]	CF8M	CoCr alloy[3]	316		IN 625
NX	NACE SERVICE[6]	Monel	Monel	Monel		
NY	NACE SERVICE[6]	CoCr alloy[3]	CoCr alloy[3]	XM-19		
AS		CoCr alloy[3]	CoCr alloy[3]	321		321
AY		CF8C/F321	CoCr alloy[3]	321		321
CC		Alloy 20	Alloy 20	Alloy 20	13	
ES		CoCr alloy[3]	CoCr alloy[3]	347		
EY		CF8C/F347	CoCr alloy[3]	347		
HC		Hastelloy C	CoCr alloy[3]	Hastelloy C		Hastelloy C
MF		CF8M or 316 w/ Teflon insert[5]	CoCr alloy[3]	316		
MH		CoCr alloy[3]	CoCr alloy[3]	316		Hastelloy C
MN		CoCr alloy[3]	CoCr alloy[3]	316		IN 625
MX		CF8M	316	316	10	
TF		13Cr (410 or CA15) w/ Teflon insert[5]	CoCr alloy[3]	13Cr (410)		
TH		CoCr alloy[3]	CoCr alloy[3]	13Cr (410)[4]		Hastelloy C
TN		CoCr alloy[3]	CoCr alloy[3]	13Cr (410)[4]		IN 625
XS		CoCr alloy[3]	CoCr alloy[3]	Monel		
XX		Monel	Monel	Monel	9	
XY		Monel	CoCr alloy[3]	Monel	11	

For a more detailed list of available trims, contact the factory or visit our web site at www.velan.com.

Note: *CoCr alloy as used throughout this catalog refers to cobalt chrome hardfacing alloys as supplied by Kennametal Stellite™, and other approved manufacturers.*

Class	150	300	600	900	1500
PN	20	50	110	150	260

PN and Class designations are not exact equivalents and are provided for comparison purposes only, based on API 600/ISO 10434 2006 edition.

(1) Base material is either the same as the body or solid trim at manufacturer's option.
(2) Bellows material shown as standard, Inconel can be used in lieu of 321 and Hastelloy C in lieu of Inconel, where design and/or pressure class applicable.
(3) CoCr alloy refers to cobalt-chrome alloys in Grade 6 (e.g. AWS CoCr-A, UNS 30006 & 30106) or Grade 21 (e.g. AWS CoCr-E, UNS 30021). Use of Grade 6 or 21 is at Velan's option.
(4) 616HT Manufacturer's standard. (F91 and C12A only).
(5) Inserts may be in seat or wedge at manufacturer's option.
(6) Valves with "NACE" Figure Numbers will meet the material requirements of NACE MR0103 and MR0175/ISO 15156.
(7) SB, SX, SY PTFE gasket and packing GS, GX, GY graphite gasket and packing.

The most comprehensive line of industrial forged and cast steel gate, globe, check, ball, butterfly, and knife gate valves and steam traps.

ASME pressure classes 150–4500 in carbon, alloy, and stainless steel



CAT-SFV



CAT-BG

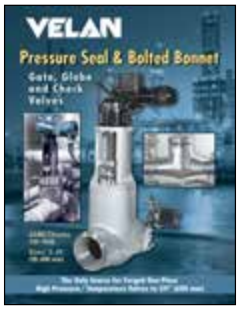

VEL-PS

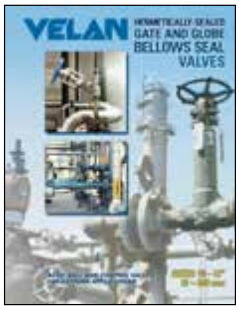

VEL-BS

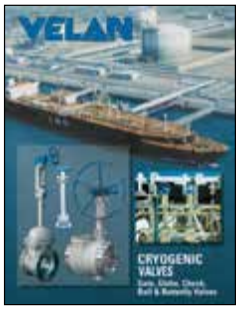

VEL-CRYO



CAT-CSV



VEL-API-603



CAT-KGV



CAT-DPCV



BRO-FLBABV

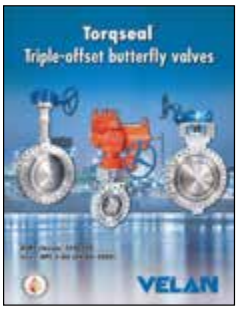

CAT-BF

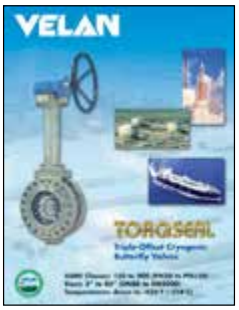

CAT-SAS-CTORQ

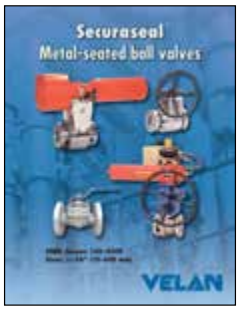

VEL-MS



CAT-PBV

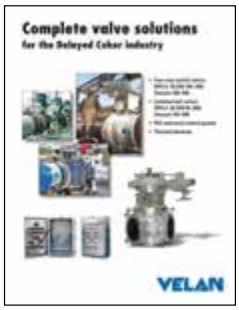

BRO-CBV

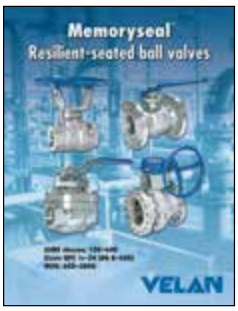

CAT-BV

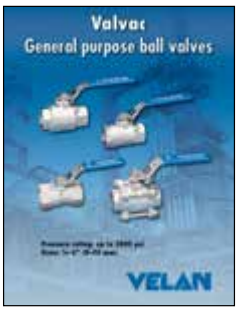

CAT-GPBV

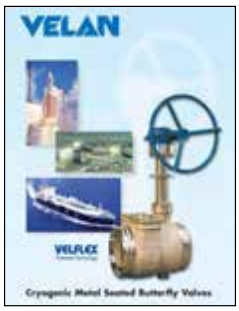

CAT-SAS-CFLEX



CAT-SAS-CCON

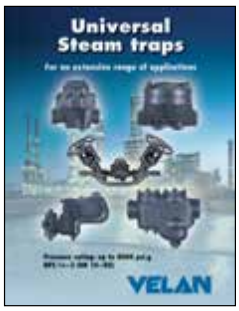

CAT-ST

Headquartered in Montreal, Canada, Velan has several international subsidiaries. For general inquiries:

Velan head office
7007 Côte de Liesse, Montreal, QC H4T 1G2 Canada
Tel: +1 514 748 7743 **Fax:** +1 514 748 8635

Check our website for more specific contact information.

www.velan.com

© 2013 Velan Inc., Montreal, QC, Canada. All rights reserved. The contents hereof are confidential and proprietary to Velan. Any unauthorized reproduction or disclosure, in whole or in part, is strictly prohibited. The material in this catalog is for general information only and shall not be used for specific performance data and material selection without first consulting Velan. Velan reserves the right to change this information without notice. Velan does not accept any liability or damages arising from the use of information in this catalog. Velan Valves, Velan, Memoryseal, Torqseal, Velflex, Adaxie, and RAMA are trademarks or registered trademarks of Velan Inc. and/or another Velan company. Stellite® is a registered trademark of Kennametal Stellite™, a wholly owned subsidiary of Kennametal Inc. All other trademarks and registered trademarks are owned by their respective companies.

CAT-CSV-12-13

Printed in Canada

Quick Reference: Handling, Storage, Installation and Operating Instructions

It is necessary to read and understand the following instructions prior to working on the valve. Additional information is available at www.velan.com.

■ *Receiving Inspection*

All valves must be inspected upon reception for damages that may have occurred during transportation or handling. Any damages noted should be documented; serious damages should be reported immediately to Velan, Field Engineering Services Manager.

■ *Storage and Handling*

Valves should be stored in a suitable sheltered location to prevent contamination by weather, dampness or foreign material. All valves are shipped from the Velan factory with end protectors mounted on inlet and outlet and these protectors should remain on the valves until they are ready for installation. If valves are equipped with an actuator or gear operator, please refer to the manufacturer's instructions for storage. For large valves a hoist and nylon slings are needed. Place a nylon sling under the valve body and hoist vertically to move to the final destination.

■ *Operation, Installation & Orientation*

All standard valves are designed for bi-directional flow unless otherwise specified, and utilize clockwise handle rotation to close.

Prior to installation, remove end covers, clean weld prep, threads and flanges using rags with unused acetone or alcohol. (During welding and construction stages valve should be protected from foreign debris getting inside that could cause extensive damage during valve cycling.)

Ensure that unidirectional valves are installed in the proper orientation (with the "Flow Direction" or "High Pressure Direction" arrow pointing in the direction of flow or high pressure accordingly.)

Ensure that valve materials of construction and pressure/temperature limits shown on the nameplate are suitable for the intended application.

Ball Valves with seat retainer shall be installed with the seat retainer on the upstream side.

Lubricate all threads, gears and fasteners with recommended lubricants or equal prior to installation.

Tighten all mating flange fasteners in a diagonal pattern and check bolting torques and retighten as necessary after installation. Do not overtorque the valve in fully open or closed position to avoid thermal binding.

All gate and globe valves should be welded on line with valves fully closed.

Refer to the web site **www.velan.com** for instructions on valve orientation, roll and tilt angles. It is generally advisable to have valves 12" and up with stems orientated vertically. Any other orientation is a compromise. Consult Velan Engineering if other orientations are required. Mechanical supports/snubbers attached to the valve are the responsibility of the end user.

Valve must not be used at the end of the line or in a safety loop.

It is the responsibility of the end-user to define the need for over-pressure protection if required.

■ *General Maintenance*

Valves should be inspected regularly during operation and should be subjected to scheduled maintenance.

Lubrication of threads and gears should be done once every six months.

■ *Spare Parts*

All parts on any valve can be ordered. Correctly determine which parts are required and provide the information shown on the valve nameplate.

Velan does not recommend changing any parts in the field, without the involvement of Velan service people or authorized service shops.

Some parts may require special fitting, hence it is best to contact your local Velan representative.

■ *Warning*

For safety reasons take the following precautions before you start work on the valve:

- Personnel making any adjustments on the valves shall wear safety equipment normally used to work with the fluid in the line where the valve is installed.
- Before removing the valve from line, the line must be fully depressurized, drained and vented.
- Non-OEM parts are not warrantable.
- Local national rules must be followed during installation and servicing.

GENERAL INFORMATION
Tel: (514) 748-7743
Fax: (514) 748-8635
Web: http://www.velan.com

Velan reserves the right to change "Quick Reference" instructions without notice.
(English) *© 2002*

Forged steel valves
gate, globe, and check



ASME CLASSES 150–4500
NPS ¼–4 (DN 8–100)
API 602/ASME B16.34

VELAN

VELAN'S PROFILE

VELAN AT A GLANCE

History
- Founded in 1950

Sales
- Over $500 million

People
- Over 2,000 employees

Product line
A world-leading range of valves across all major industrial applications:
- Cast steel gate, globe, check, and ball valves
- Forged steel gate, globe, check, and ball valves
- Triple-offset butterfly valves
- Knife gate valves
- Severe service valves
- Bellows seal valves
- Steam traps

Quality
All major certifications and approvals
- ASME N stamp and NPT for nuclear valves (since 1970)
- ISO 9001 (since 1991) Currently certified to ISO 9001:2008
- PED
- GOST (TR and RTN)
- API 6A and API 6D
- TA-Luft
- Quality programs fully compliant with ISO-9001, NCA 4000, ASME NQA-1 and 10 CFR 50 Appendix B, surveyed by ASME and audited by NUPIC, Northrop Grumman Newport News, DCMA, utilities, architect/ engineers, and other organizations from around the world

Headquartered in Montreal, Velan has several international subsidiaries. For general inquiries:

Velan head office:
7007 Côte de Liesse,
Montreal, QC H4T 1G2 Canada

Tel: +1 514 748 7743
Fax: +1 514 748 8635

Check our website for more specific contact information.

www.velan.com



Velan is one of the world's leading manufacturers of cast and forged steel gate, globe, check, ball, triple-offset, knife gate, highly engineered severe service valves, and steam traps offering superior performance across all major industrial applications including: fossil, nuclear, and cogeneration power; oil and gas; refining and petrochemicals; chemicals and pharmaceutical; LNG and cryogenics; marine; HVAC; mining; water and wastewater; pulp and paper; and subsea. The company also supplies actuators and integrated control packages.

Founded in 1950, Velan has earned a reputation for product excellence and innovation by bringing to the market superior products with special emphasis on quality, safety, ease of operation, and long service life. Velan valves have an extremely broad installation base and are approved by major companies worldwide.

© 2014 Velan Inc., Montreal, QC, Canada. All rights reserved. The contents hereof are confidential and proprietary to Velan. Any unauthorized reproduction or disclosure, in whole or in part, is strictly prohibited. The material in this catalog is for general information only and shall not be used for specific performance data and material selection without first consulting Velan. Velan reserves the right to change this information without notice. Velan does not accept any liability or damages arising from the use of information in this catalog. Velan Valves, Velan, Memoryseal, Torqseal, Velflex, Adaxie, and RAMA are trademarks or registered trademarks of Velan Inc. and/or another Velan company. Stellite® is a registered trademark of Kennametal Stellite™, a wholly owned subsidiary of Kennametal Inc. All other trademarks and registered trademarks are owned by their respective companies.

TABLE OF CONTENTS

Velan's global network 3
Manufacturing program 4
Semi-automatic assembly & testing plant 4
Exclusive design features 5
Packing chamber design 6
Low fugitive emission valves 7
Forged steel gate valves 8–9
Extended body gate valves 10
Conventional port globe valves 11
Conventional port bonnetless y-pattern globe valves 12
Conventional port 45° inclined globe valves 13
Conventional port check valves including piston, ball or swing check 14
Inclined piston check valves 15
Special services– valves for nuclear including live-loaded gate and globe 16
Special services– hermetically sealed bellows seal valves 17
Special services– boiler plant service valves 18
Special services– continuous blowdown valves 19
Special services– forged cryogenic valves 20
Special services– HF acid valves 21
Special services– fabricated valves 22
Engineering data 23–30
How to order 31

VELAN'S GLOBAL NETWORK

Head office



Montreal, Canada
Velan Inc.

- 17 production facilities
  - 5 plants in North America
  - 6 plants in Europe
  - 6 plants in Asia
- 5 stocking and distribution centers
- Hundreds of distributors worldwide
- Over 60 service shops worldwide

Manufacturing plants

North America



Montreal, Canada
Velan Inc., Plant 1 (N)



Montreal, Canada
Velan Inc., Plant 2 and 7 (N)



Granby, Canada
Velan Inc., Plant 4 and 6



Montreal, Canada
Velan Inc., Plant 5



Williston, VT, U.S.A.
Velan Valve Corp., Plant 3 (N)

Europe



Lyon, France
Velan S.A.S.



Mennecy, France
Segault S.A.



Leicester, UK
Velan Valves Ltd.



Lisbon, Portugal
Velan Válvulas Industriais, Lda.



Lucca, Italy
Velan ABV S.p.A., Plant 1



Lucca, Italy
Velan ABV S.p.A., Plant 2

Asia



Ansan City, South Korea
Velan Ltd., Plant 1



Ansan City, South Korea
Velan Ltd., Plant 2



Ansan City, South Korea
Velan Ltd., Plant 3



Taichung, Taiwan
Velan Valvac Mfg. Co., Ltd.



Suzhou, China
Velan Valve (Suzhou) Co., Ltd.



Coimbatore, India
Velan Valves India Pvt. Ltd.

Distribution centers



Granby, Canada
Vel*CAN*



Benicia, CA, U.S.A.
Vel*CAL*



Marietta, GA, U.S.A.
Vel*EAST*



Houston, TX, U.S.A.
Vel*TEX*



Willich, Germany
Velan GmbH

(N) – *ASME N-stamp accredited manufacturer*

Velan reserves the right to change this information without notice. © 2014 Velan Inc. All rights reserved.

MANUFACTURING PROGRAM

Small forged steel valves in carbon, alloy, and stainless steel
NPS ¼–4 (DN 8–100)

Valve type	Bonnet type	Bonnet joint	Flanged ends	Threaded or socket weld		Butt weld ends	Male / female ends
				Conventional port	Full port		
GATE	OS & Y	Bolted	150, 300, 600, 1500, 2500	800, 1500, 1690	800, 1500	1500, 2500	
	OS & Y	Welded	150, 300, 600, 1500, 2500, 4500	800, 1500, 1690, 2500, 4500	800	1500, 2500	800, 1500
GLOBE		Bolted	150, 300, 600, 1500	800, 1500, 1690		1500	
	OS & Y	Welded	150, 300, 600, 1500	800, 1500, 1690		1500	
		Y-pattern	1500, 2500	1690, 2680, 4500	1690, 2680, 4500		
Valve type	**Type**	**Cover joint**	**Flanged ends**	**Threaded or socket weld**		**Butt weld ends**	
				Conventional port			
CHECK	Piston	Bolted	150, 300, 600, 1500	800, 1500		1500	
	Piston	Welded	150, 300, 600, 1500	800, 1500		1500	
	Ball	Bolted	150, 300, 600	800, 1500		1500	
	Swing	Bolted	150, 300, 600	800			
	Swing	Coverless		800			
	Inclined piston	Welded	1500, 2500	1690, 2680, 4500		1690, 2680, 4500	

SEMI-AUTOMATIC ASSEMBLY AND TESTING PLANT

For Class 800 (API 602) gate valves

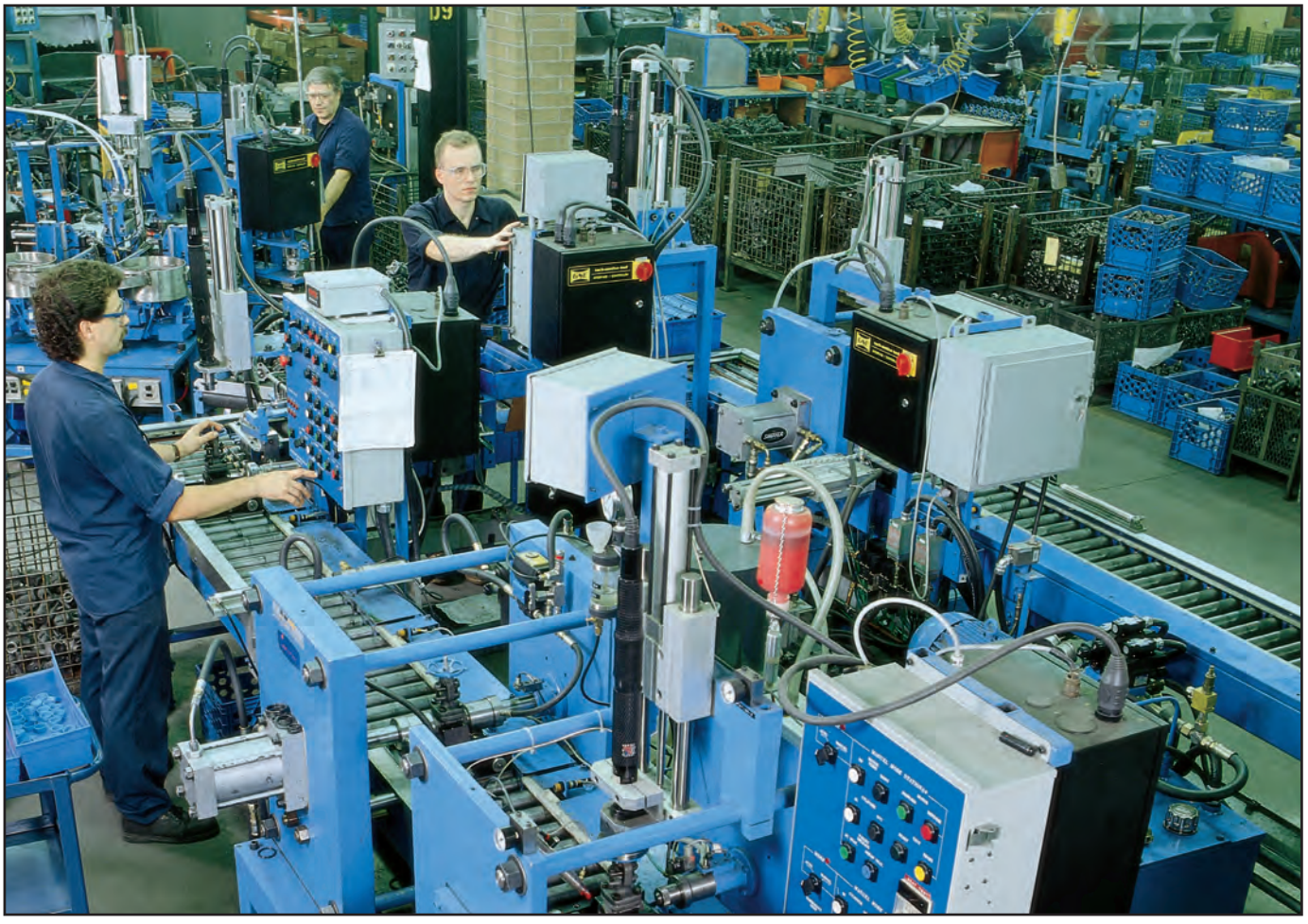

Velan reserves the right to change this information without notice. © 2014 Velan Inc. All rights reserved.

EXCLUSIVE DESIGN FEATURES

Stronger, leakproof body-bonnet joint fully encased spiral wound gasket

The design of the gasketed joint is critical. Its compression is better controlled in a fully enclosed cavity. Also, the possibility of unwinding of the SS spiral metal is eliminated.

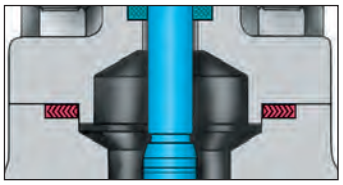

Stronger bolting ensures joint tightness

Simple stress vs. deflection tests conducted on spiral wound gaskets in our laboratory confirmed that the control of leakage is highly dependent on gasket seating stress and that the values shown in the **ASME Section III Code**, namely the seating factor **m** = 3 and the seating stress **y** = 10,000 psi used in calculating bolt sizes, are highly insufficient.

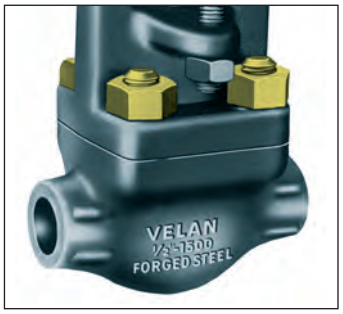

Our bolted joints are calculated to a minimum gasket stress of 16,000 psi which is essential for a leakproof joint.

GASKET OD	ASME m	VELAN m	ASME y	VELAN y
2 – 5.5"	3	7	10,000	16,000 – 28,000

Threaded-in strength welded bonnets (full-penetration welds on special orders only)

Valves with threaded-in strength welded seats offer an additional level of safety against fugitive emissions.

The body-bonnet welds are made on fully automatic MIG Welders. Weld hardness is controlled (including the heat-affected zone) and maintained below 200 HB.

Right: Automatic MIG welder.



Note: *CoCr alloy as used throughout this catalog refers to cobalt chrome hardfacing alloys as supplied by Kennametal Stellite™, and other approved manufacturers.*

Safer and tighter stem seal

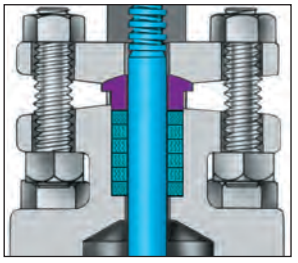

- Stem hardened and ground.
- Two-piece self-aligning gland.
- Each packing ring individually inserted and compressed for better tightness.
- Sturdy full-length threaded corrosion-resistant bolts provide the required high packing stress.
- Live-loading optional.
- Positive backseat: stem bevel against integral backseat.

Two-piece stem drive renewable in-line

This exclusive and handy feature found only on Velan small forged OS & Y gate valves enables:

- Replacement of stem nut in-line.
- Removal of handwheel without affecting the position of valve (closed or open).
- Better stem nut lubrication control.

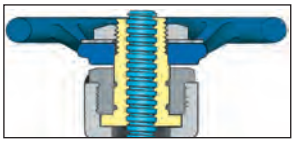

Body-guided disc in globe stop, needle and stop-check valves eliminates side thrust on stem

The top-and-bottom guided disc assures perfect seat and disc alignment in spite of side thrust caused by high velocity flow. This prevents stem from scoring and galling and provides longer disc seal and body life.

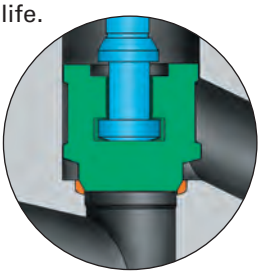

Solid CoCr alloy disc for full CoCr alloy trim

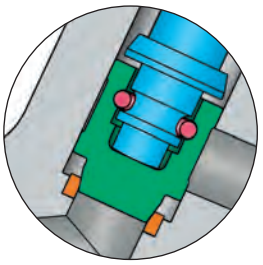

Solid CoCr alloy disc for all y-pattern valves

Body-guided disc in piston-check valves

- Assures perfect alignment of disc and seat even at large flow velocities.
- Flat seating faces for low and medium pressures.

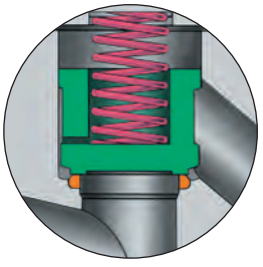

DESIGN OF STEM SEALS FOR LOW EMISSIONS

Test results lead to design of long-life leakproof stem seal

The Velan stem seal evolved from these test findings:

- **Large loads.** Sealing is achieved when compression load is high and packing forms a mass of close fibers of low porosity and permeability (4,000 psi for graphite).
- **Short and narrow packing chambers** improve sealing.
- **Small clearances between vital parts.**
- **Precision stem and packing chambers.** Straightness, roundness and fine finish of stem and packing chamber wall are essential.
- **Short and narrow packing chamber.** Maximum six rings in a single set chamber, and wherever possible, only $^{3}/_{16}$ – $^{1}/_{4}$" (4.76–6.35 mm) wide.
- **Rings precompressed** to 3500–4000 psi for graphite and to 1800–2000 psi for PTFE to ensure equal stress distribution and effectiveness of all rings.
- **Stem and packing chamber walls.** Close roundness, straightness and superior 8–16 RMS or burnished surface finish.
- **Live-loading (optional).** Two sets of Belleville springs maintain a permanent packing stress of 3500–4000 psi.

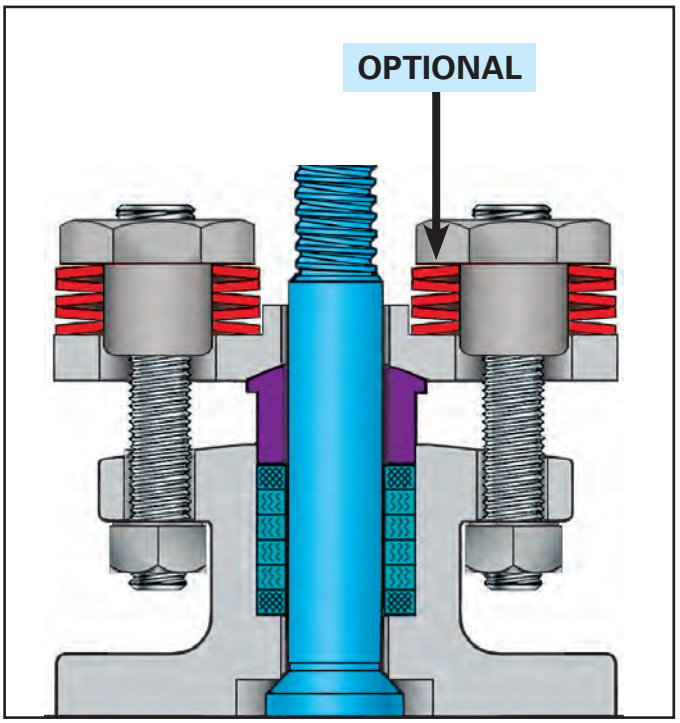

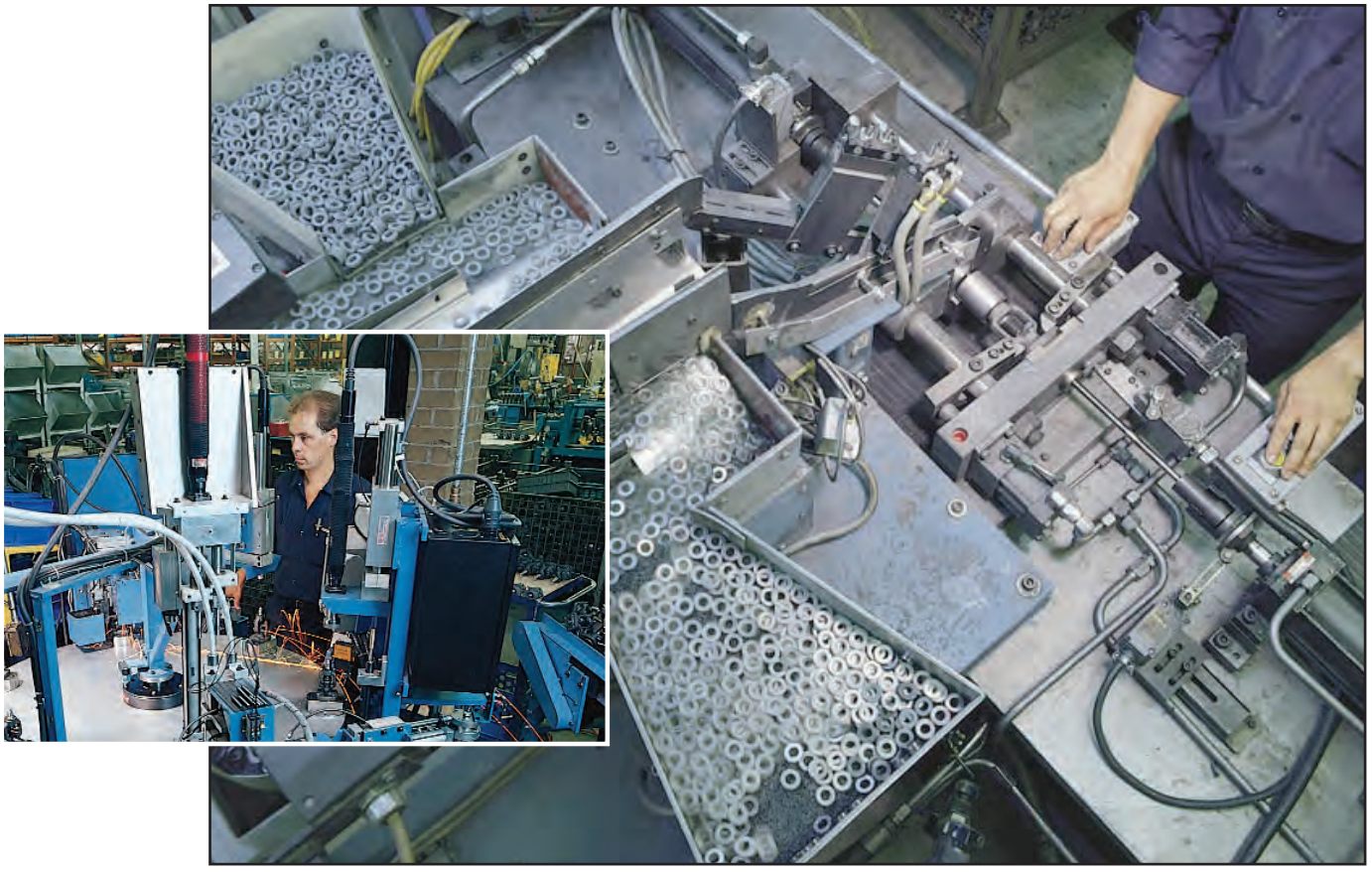

Photos illustrate packing machine and bonnet assembly machine.

Velan reserves the right to change this information without notice. © 2014 Velan Inc. All rights reserved.

FUGITIVE EMISSION TESTING

Why fugitive emission (FE) testing is so important

- In a typical petroleum plant, 60% of fugitive emissions are from valves. Therefore it is extremely important to reduce valve emissions to the greatest degree possible.
- Four widely recognized standards regarding valve fugitive emissions are ISO 15848-1, ISO 15848-2, API 622, and API 624.
- Velan offers standard cast steel bolted bonnet gate and globe valves qualification tested for compliance with ISO, API and EPA fugitive emission requirements.
- The primary intention of API 622 compares performance of different packing brands.
- Different packing arrangements are available upon request.

ISO 15848-1 type test and ISO 15848-2 production tests	API standard 622 FE test in a test fixture	API Standard 624 FE type test in a valve
• Introduced in 2006. • Velan has tested our standard packing set to ISO 15848-1 and re-validated our FE certification. • Uses the "global" test method. • ISO 15848-1 test is carried out with a standard valve and additional bonnet enclosure.	• Introduced in 2006. • Velan has tested our standard packing set to API 622 and re-validated our FE certification. • Uses the "sniffing / flushing" test method (local method). • API 622 test is carried out in a test fixture designed to simulate a valve.	• Expected release in 2013. • Intended for low fugitive emissions valves. • Uses sniffing as a test method. • Testing is carried out using assembled valves. • Tested valve qualifies a range of sizes and classes.

Velan ISO 15848-1 Research and Development test lab

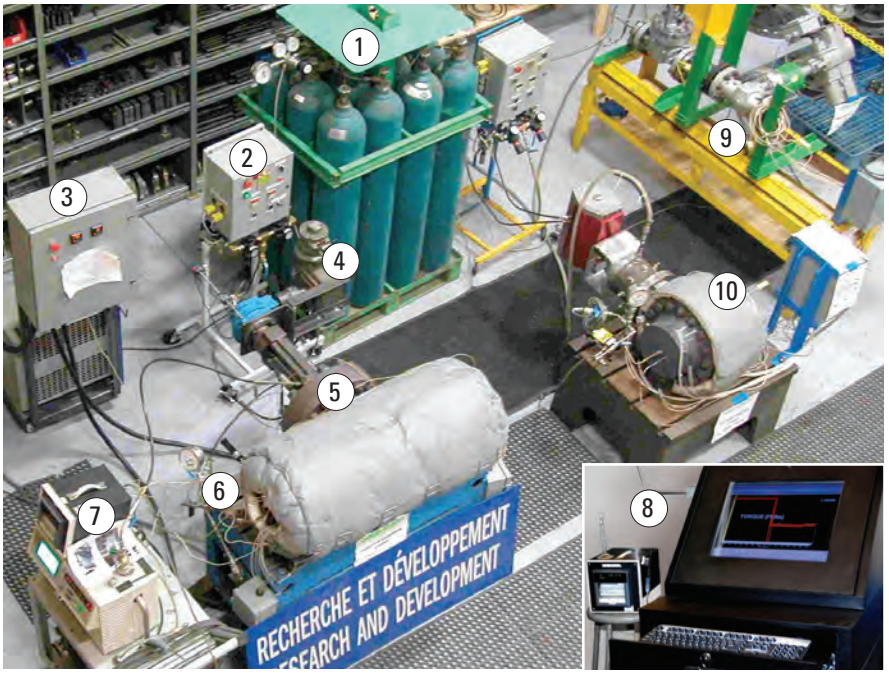



1	Helium source (pressurized cluster bottles)
2	Valve actuator control box
3	Heating system control box
4	Valve actuator
5	Qualification valve NPS 8 (DN 200) Class 600 API 600 cast steel gate

6	Heating elements
7	Mass spectrometer
8	Data acquisition system
9	Qualification valve NPS 3 (DN 80) Class 600 API 600 cast steel gate
10	Qualification valve NPS 10 (DN 250) Class 300 Torqseal®

Velan reserves the right to change this information without notice. © 2014 Velan Inc. All rights reserved.

VELAN FORGED STEEL GATE VALVES

THREADED, SOCKET WELD AND FLANGED

**NPS ¼–2 (DN 8–50), ASME CLASS 800 (1975 psi @ 100°F),
ASME CLASS 1500 (3705 psi @ 100°F), FLANGED ASME CLASSES 150, 300, 600, 1500**

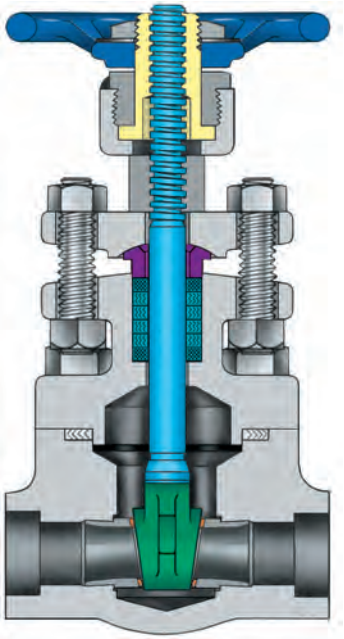

BOLTED BONNET
2054B – Class 800
3054B – Class 1500

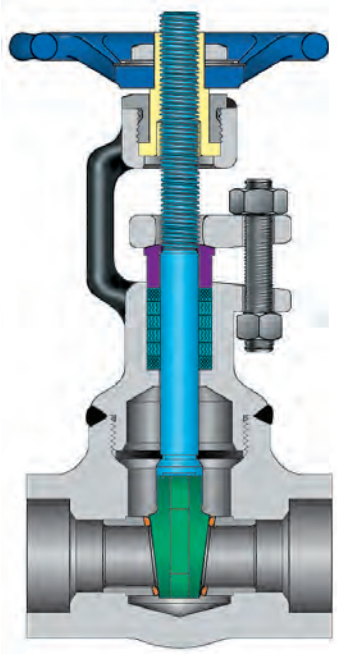

WELDED BONNET
2054W – Class 800
3054W – Class 1500

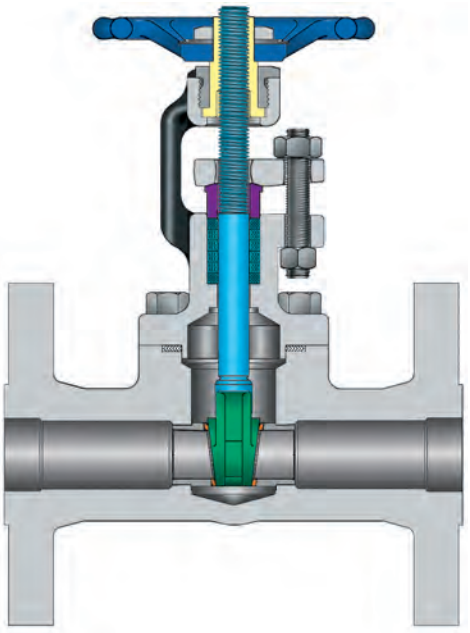

FLANGED BOLTED BONNET
0054B – Class 150
1054B – Class 300
2054B – Class 600
3054B – Class 1500

DESIGN FEATURES

- A compact but extremely sturdy design for high pressure-temperature service.
- Solid CoCr alloy wedge (optional) ensures low friction and long service life.
- For Class 1500 valves and for steam service, seats are seal-welded to the body.
- Packing rings are precompressed to 4000 psi to provide a high integrity seal.
- For welded bonnet valves, the bonnet is threaded in and torqued to an engineered torque value and the body bonnet joint is strength-welded, offering double protection against leakage. (body/bonnet threads and strength-weld).
- Fully guided wedge reduces wear on seating surfaces.
- Repairable 2-piece stem drive.

OPTIONAL FEATURES (SPECIAL APPLICATIONS)

- A special design is also available with double packing, leak-off connection, live-loading and a packing blowout for easy removal of old packing.
- Bolted bonnet gate valves for alkylation service (HF acid service see page 21).
- Parallel slide gate valves.
- API 603 NPS ½–1½ (DN 15–40), for ASME Classes 150, 300, and 600.

PART	STANDARD MATERIALS
Body	A105
Bonnet	A105
Gasket	Gr. 304 (stainless & graphite)
Packing flange	A105
Seat	Gr. 410 (stainless) HF CoCr alloy
Wedge	CA15 HT or CoCr alloy
Stem	Gr. 410 (stainless)
Stem nut	Gr. 416 (stainless)
Yoke bushing	12L14 steel
Gland	Gr. 416 (stainless)
Packing	Graphite
Gland bolt	Gr. B6
Gland nut	Gr. 2H
Cap screw	Gr. B7
Handwheel	Malleable iron
Handwheel nut	Steel
Handwheel lockwasher	Steel
Name plate	Aluminum

For other materials, trim and engineering data, see pages 23–31.

 Velan reserves the right to change this information without notice. © 2014 Velan Inc. All rights reserved.

BOLTED BONNET GATE DIMENSIONS AND WEIGHTS

Size NPS DN	A Port		B End-to-end		C Center-to-top, closed		D Center-to-top, open		H Handwheel		K Socket weld bore	L Socket weld depth	Weight lb kg	
	800	1500	800	1500	800	1500	800	1500	800	1500			800	1500
1/4 8	0.25 6	0.25 6	3.13 80	4.00 102	4.81 122	7.13 181	5.31 135	7.75 197	2.50 64	3.50 89	0.555 14.1	0.38 9.5	3.30 1.5	11.00 5.0
3/8 10	0.25 6	0.35 9	3.13 80	4.00 102	4.81 122	7.13 181	5.31 135	7.75 197	2.50 64	3.50 89	0.690 17.5	0.38 9.5	3.30 1.5	11.00 5.0
1/2 15	0.38 10	0.50 13	3.13 80	4.00 102	4.81 122	7.13 181	5.31 135	7.75 197	2.50 64	3.50 89	0.855 21.7	0.38 9.5	3.30 1.5	11.00 5.0
3/4 20	0.50 13		3.25 83	5.00 127	5.91 150	7.25 184	6.75 171	7.88 200	3.50 89	3.50 89	1.065 27.1	0.50 12.7	5.30 2.4	13.00 5.9
1 25	0.69 18		3.50 89	6.00 152	6.38 162	8.70 221	7.38 188	9.63 244	3.50 89	5.00 127	1.330 33.8	0.50 12.7	6.40 2.9	26.00 11.8
1 1/4 32	1.25 32		5.00 127	7.00 178	7.77 197	9.12 232	9.12 232	10.63 270	4.75 121	6.00 152	1.675 42.5	0.50 12.7	15.00 6.8	34.00 15.4
1 1/2 40	1.25 32		5.00 127	7.00 178	7.77 197	9.12 232	9.12 232	10.63 270	4.75 121	6.00 152	1.915 48.6	0.50 12.7	15.00 6.8	34.00 15.4
2 50	1.50 38		5.25 133	9.00 229	8.70 221	10.56 268	10.40 264	12.30 312	6.00 152	10.00 254	2.406 61.1	0.63 15.9	19.00 8.6	58.00 26.3

FLANGED FACE-TO-FACE

Size NPS DN	Flanged face-to-face				
	150	300	600	1500	2500
1/4 8	4.00 102	5.50 139	6.50 165	8.50 216	–
3/8 10	4.00 102	5.50 139	6.50 165	8.50 216	–
1/2 15	4.25 108	5.50 139	6.50 165	8.50 216	10.38 264
3/4 20	4.62 117	6.00 152	7.50 191	9.00 229	10.75 273
1 25	5.00 127	6.50 165	8.50 216	10.00 254	12.12 308
1 1/4 32	5.50 140	7.00 178	9.00 229	11.00 279	13.75 349
1 1/2 40	6.50 165	7.50 191	9.50 241	12.00 305	15.12 384
2 50	7.00 178	8.50 216	11.50 292	14.50 368	17.75 451

Also see page 17 for bellows seal valves for emission-free service.

BOLTED BONNET GATE FULL PORT DIMENSIONS AND WEIGHTS

Size NPS DN	A Port	B End-to-end		C Center-to-top, closed		D Center-to top, open		H Handwheel		K Socket weld bore	L Socket weld depth	Weight lb kg	
		800	1500	800	1500	800	1500	800	1500			800	1500
1/4 8	0.25 6	–	4.00 102	–	7.10 180	–	7.8 198	–	3.50 89	0.555 14.1	0.38 9.5	–	10 4.5
3/8 10	0.35 9	–	4.00 102	–	7.10 180	–	7.8 198	–	3.50 89	0.690 17.5	0.38 9.5	–	10 4.5
1/2 15	0.50 13	3.25 83	4.00 102	5.90 150	8.7 221	6.63 168	7.88 200	3.50 89	3.50 89	0.855 21.7	0.38 9.5	6.20 2.8	12.00 5.4
3/4 20	0.69 18	3.50 89	6.00 152	6.40 162	9.10 231	7.40 188	9.60 244	4.75 121	4.75 121	1.065 27.1	0.50 12.7	6.60 3.0	24.00 10.9
1 25	0.96 24	5.00 127	7.00 178	7.80 198	9.10 231	9.10 231	10.60 269	6.00 152	6.00 152	1.330 33.8	0.50 12.7	15.00 6.8	32.00 14.5
1 1/4 32	1.25 32	5.00 127	7.00 178	7.80 198	9.10 231	9.10 231	10.60 269	6.00 152	6.00 152	1.675 42.5	0.50 12.7	15.00 6.8	32.00 14.5
1 1/2 40	1.50 38	5.25 133	9.00 229	8.60 218	10.60 269	10.40 264	12.30 312	6.00 152	10.00 254	1.915 48.6	0.50 12.7	20.00 9.1	50.00 22.7
2 50	2.00(1) 51	6.00 152	9.00 229	10.90 277	11.50 292	13.12 333	13.75 349	8.00 203	10.00 254	2.406 61.1	0.63 15.9	24.00 10.9	60.00 27.2

(1) 1.89" (48 mm) Class 1500

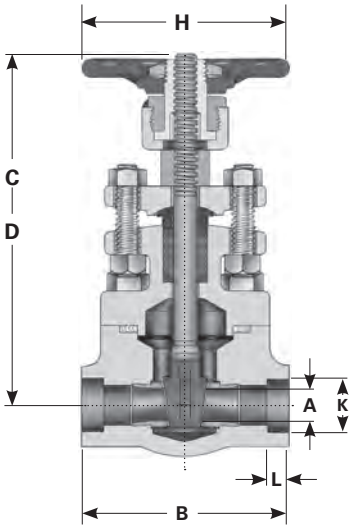

WELDED BONNET GATE VALVE DIMENSIONS AND WEIGHTS(2)

Size NPS DN	A Port				B End-to-end				C Center-to-top, closed				D Center-to-top, open				H Handwheel				K Socket weld bore	L Socket weld depth	Weight lb kg			
	800	1500	2500	4500	800	1500	2500	4500	800	1500	2500	4500	800	1500	2500	4500	800	1500	2500	4500			800	1500	2500	4500
1/4 8	0.25 6	0.25 6	–	–	2.88 73	3.50 89	–	–	4.63 117	6.40 163	–	–	5.13 130	7.10 180	–	–	2.50 64	3.50 89	–	–	0.555 14.1	0.38 9.5	2.50 1.1	–	–	–
3/8 10	0.25 6	0.25 6	–	–	2.88 73	3.50 89	–	–	4.63 117	6.40 163	–	–	5.13 130	7.10 180	–	–	2.50 64	3.50 89	–	–	0.690 17.5	0.38 9.5	2.50 1.1	6.50 2.9	–	–
1/2 15	0.38 10	0.35 9	0.50 13	–	2.88 73	3.50 89	5.00 127	–	4.63 117	6.40 163	9.00 229	–	5.13 130	7.10 180	9.80 249	–	2.50 64	3.50 89	6.00 152	–	0.855 21.7	0.38 9.5	2.50 1.1	6.50 2.9	21.00 9.5	–
3/4 20	0.50 13	0.50 13	0.50 13	0.58 15	3.25 83	3.50 89	5.00 127	7.00 178	5.90 150	6.40 163	9.00 229	11.82 300	6.63 168	7.10 180	9.80 249	12.62 321	3.50 89	3.50 89	6.00 152	8.00 203	1.065 27.1	0.50 12.7	4.40 2.0	6.80 3.1	20.00 9.1	62 28
1 25	0.69 18	0.69 18	0.69 18	0.58 15	3.50 89	5.00 127	5.00 127	8.00 203	6.30 160	8.10 206	9.10 231	11.82 300	7.20 182	8.90 226	10.00 254	12.62 321	3.50 89	4.75 121	6.00 152	8.00 203	1.330 33.8	0.50 12.7	5.30 2.4	13.00 5.9	19.00 8.6	66 30
1 1/4 32	1.25 32	1.25 32	0.96 24	0.88 22	5.00 127	5.25 133	10.00 254	11.00 279	7.77 197	9.40 239	11.30 287	16.50 419	9.12 231	10.80 274	12.50 318	17.72 450	4.75 121	6.00 152	8.00 203	12.00 305	1.675 42.5	0.50 12.7	11.00 5.0	20.00 9.1	68.00 30.8	127 58
1 1/2 40	1.25 32	1.25 32	0.96 24	0.88 22	5.00 127	5.25 133	10.00 254	11.00 279	7.77 197	9.40 239	11.30 287	16.50 419	9.12 231	10.80 274	12.50 318	17.72 450	4.75 121	6.00 152	8.00 203	12.00 305	1.915 48.6	0.50 12.7	11.00 5.0	20.00 9.1	68.00 30.8	127 58
2 50	1.50 38	1.50 38	1.50 38	1.20 31	5.25 133	10.00 254	10.00 254	11.00 279	8.50 216	12.40 315	12.40 315	17.00 432	10.40 264	14.10 358	14.15 358	18.6 472	6.00 152	10.00 254	10.00 254	12.00 305	2.406 61.1	0.63 15.9	16.00 7.3	50.00 22.7	77.00 34.9	151 69

(2) Full bore also available for Classes 800 and 1500

VELAN FORGED STEEL EXTENDED BODY GATE VALVES

CONVENTIONAL PORT, THREADED OR SOCKET WELD FEMALE

NPS ½–2 (DN 15–50), API 602, ASME CLASSES 800, 1500



INTEGRALLY-REINFORCED EXTENDED BODY – 2174W

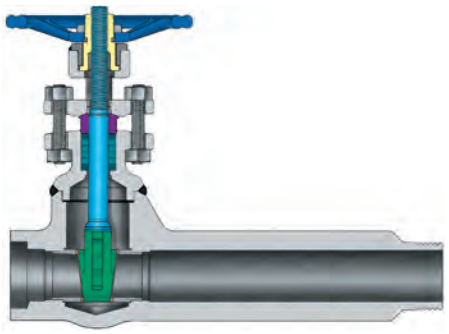

EXTENDED BODY – 2184W

PART	STANDARD MATERIALS
Body	A105
Bonnet	A105
Packing flange	A105
Seat	Gr. 410 (stainless) HF CoCr alloy
Wedge	CA15 HT or CoCr alloy
Stem	Gr. 410 (stainless)
Stem nut	Gr. 416 (stainless)
Yoke bushing	Steel
Gland	Gr. 416 (stainless)
Packing	Graphite
Gland bolt	Gr. B6 (stainless)
Gland nut	Gr. 2H
Handwheel	Malleable iron
Handwheel nut and lockwasher	Steel
Name plate	Aluminum

For other materials, trim and engineering data, see pages 23 – 31.

TWO TYPES

- This valve is available with an extended body or an integrally-reinforced extended body (IREB).
- Extended body gate valves have a welded or NPT connection and are used for tapping of pressure vessels and header lines for vents, drains or takeoff lines and instrumentation.
- Also available: extended body assemblies for vents, drains, and instrument root valves.

AVAILABLE VARIATIONS[2]

FAMILY STANDARD END	MALE EXTENDED END	
	Standard: 2184W, 3184W	IREB: 2174W, 3174W
Thread	Couplet, NPT, or Socket	Couplet, NPT, socket weld (plain), butt weld
Socket weld	Couplet or Socket	

EXTENDED BODY GATE VALVE DIMENSIONS AND WEIGHTS

Size NPS DN	A Port	B End-to-end		C Center-to-top, closed		D Center-to-top, open		H Handwheel		K Socket weld bore	L Socket weld depth	DA Short end-to-center		DB Long end-to center		Weight lb kg	
	800 & 1500	800	1500	800	1500	800	1500	800	1500			800	1500	800	1500	800	1500
½	0.50[1]	5.63	5.75	5.90	6.2	6.6	6.8	3.50	3.50	0.855	0.38	1.63	1.75	4.00	4.00	5.0	7.7
15	13	143	146	150	158	168	173	89	89	21.7	9.5	41	44	102	102	2.3	3.5
¾	0.50	5.63	5.75	5.90	6.2	6.6	6.8	3.50	3.50	1.065	0.50	1.63	1.75	4.00	4.00	5	8.8
20	13	143	146	150	158	168	173	89	89	27.1	12.7	41	44	102	102	2.3	4.0
1	0.69	5.75	7.25	6.4	8.1	7.4	8.9	3.50	4.75	1.33	0.50	1.75	2.50	4.00	4.75	6.1	17.00
25	18	146	184	163	206	188	226	89	121	33.8	12.7	44	64	102	121	2.8	7.7
1¼	1.25	7.00	–	7.6	–	9.2	–	4.75	–	1.675	0.50	2.25	–	4.75	–	13	–
32	32	178		193		234		121		42.5	12.7	57		121		6	
1½	1.25	7.25	7.88	7.6	9.40	9.2	10.8	4.75	6.00	1.915	0.50	2.5	2.63	4.75	5.25	13.00	24.00
40	32	184	200	193	239	234	274	121	152	48.6	12.7	64	67	121	133	6	11
2	1.50	7.88	12.25	8.50	12.40	10.40	14.10	6.00	10.00	2.406	0.63	2.63	5.00	5.25	7.25	19.00	55.00
50	38	200	311	216	315	264	358	152	254	61.1	15.9	67	127	133	184	9	25

IREB GATE VALVE DIMENSIONS AND WEIGHTS

Size NPS DN	A Port	B End-to-end		C Center-to-top, closed		D Center-to-top, open		H Handwheel		K Socket weld bore	L Socket weld depth	DA Short end-to-center		DB Long end-to center		Weight lb kg	
	800 & 1500	800	1500	800	1500	800	1500	800	1500			800	1500	800	1500	800	1500
½	0.50[1]	8.63	8.88	5.90	6.2	6.63	6.8	3.50	3.50	0.855	0.38	1.63	1.75	7.00	7.13	6.6	8.8
15	13	219	226	150	158	168	173	89	89	21.7	9.5	41	44	178	181	3.0	4.0
¾	0.50	8.63	8.88	5.90	6.2	6.63	6.8	3.50	3.50	1.065	0.50	1.63	1.75	7.00	7.13	6.6	10
20	13	219	226	150	158	168	173	89	89	27.1	12.7	41	44	178	181	3.0	4.5
1	0.69	9.38	10.13	6.4	8.1	7.4	8.9	3.50	4.75	1.33	0.50	1.75	2.50	7.63	7.63	7.7	20
25	18	238	257	163	206	188	226	89	121	33.8	12.7	44	64	194	194	3.5	9.1
1¼	1.25	10.50	10.63	7.6	9.4	9.2	10.8	4.75	6.00	1.675	0.50	2.50	2.63	8.00	8.00	15	30
32	32	266	270	193	239	234	274	121	152	42.5	12.7	64	67	203	203	6.8	14
1½	1.25	10.50	10.63	7.6	9.4	9.2	10.8	4.75	6.00	1.915	0.50	2.50	2.63	8.00	8.00	15	30
40	32	266	270	193	239	234	274	121	152	48.6	12.7	64	67	203	203	6.8	14
2	1.50	11.88	14.25	8.50	12.4	10.4	14.1	6.00	10.00	2.406	0.63	2.63	5.00	9.25	9.25	25	66
50	38	302	362	216	315	264	358	152	254	61.1	15.9	67	127	235	235	11.3	30

(1) 0.36" (9 mm) seat for ½" NPT male end only. *(2) Bolted bonnet also available.*

Velan reserves the right to change this information without notice. © 2014 Velan Inc. All rights reserved.

VELAN FORGED STEEL GLOBE VALVES

CONVENTIONAL PORT, THREADED OR SOCKET WELD

NPS ¼–2 (DN 8–50), ASME CLASS 800 (1975 psi @ 100°F), ASME CLASS 1500 (3705 psi @ 100°F)
FLANGED ASME CLASSES 150, 300, 600, 1500

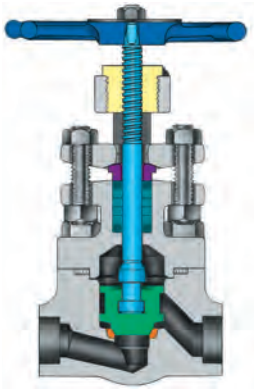

BOLTED BONNET
2074B – Class 800
3074B – Class 1500

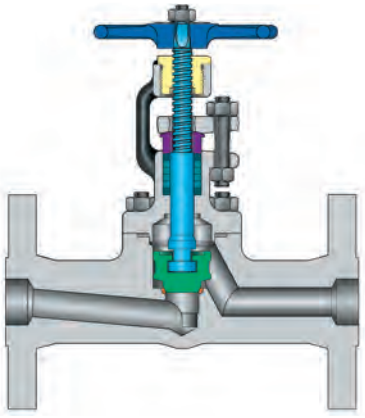

FLANGED BOLTED BONNET
0074B – Class 150 2074B – Class 600
1074B – Class 300 3074B – Class 1500

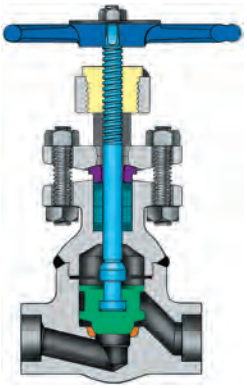

WELDED BONNET
2074W – Class 800
3074W – Class 1500

PART	STANDARD MATERIALS
Body	A105
Seat (integral)	CoCr alloy
Bonnet	A105
Gasket	Gr. 304 (stainless and graphite)
Packing flange	A 105
Disc	CA15 HT or CoCr alloy
Stem	Gr. 410 (stainless)
Stem nut	Gr. 416 (stainless) or bronze
Gland	Gr. 416 (stainless)
Packing	Graphite
Gland bolt	Gr. B6
Gland nut	Gr. 2H
Cap screw	Gr. B7
Handwheel	Malleable iron
Handwheel lockwasher	Steel
Name plate	Aluminum

Available with live-loading, double packing, and leak-off.
Also see page 17 for bellows seal valves for emission-free service.

For other materials, trim and engineering data, see pages 23 – 31.

BOLTED BONNET GLOBE DIMENSIONS AND WEIGHTS

Size NPS DN	A Port		B End-to-end		C Center-to-top, closed		D Center-to-top, open		H Handwheel		K Socket weld bore	L Socket weld depth	Weight lb kg		Flanged Face-to-face			
	800	1500	800	1500	800	1500	800	1500	800	1500			800	1500	150	300	600	1500
1/4 8	0.36 9.2	0.50 13	3.13 80	4.00 102	4.6 117	7.69 195	4.9 124	8.1 206	2.5 64	6 152	0.555 14.1	0.38 9.5	3.50 1.6	12.00 5.4	4.00 102	6.00 152	6.50 165	8.50 216
3/8 10	0.36 9.2	0.50 13	3.13 80	4.00 102	4.6 117	7.69 195	4.9 124	8.1 206	2.5 64	6 152	0.690 17.5	0.38 9.5	3.50 1.6	12.00 5.4	4.00 102	6.00 152	6.50 165	8.50 216
1/2 15	0.36 9.2	0.50 13	3.13 80	4.00 102	4.6 117	7.69 195	4.9 124	8.1 206	2.5 64	6 152	0.855 21.7	0.38 9.5	3.50 1.6	12.00 5.4	4.25 108	6.00 152	6.50 165	8.50 216
3/4 20	0.50 13	0.50 13	3.25 83	5.00 127	6.61 168	7.8 198	7.1 180	8.4 213	4.0 102	6 152	1.065 27.1	0.50 12.7	5.90 2.7	14.00 6.4	4.62 117	7.00 178	7.50 190	9.00 229
1 25	0.75 19	0.75 19	3.50 89	6.00 152	6.70 170	9.2 233	7.3 185	10.0 254	4.0 102	8 203	1.330 33.8	0.50 12.7	6.70 3.0	29.00 13.2	5.00 127	8.00 203	8.50 216	10.00 254
1 1/4 32	1.25 32	1.25 32	5.00 127	7.00 178	8.11 206	10.1 257	8.7 221	11.0 279	6.0 152	8 203	1.675 42.5	0.50 12.7	18.00 8.2	37.00 16.8	5.50 140	8.50 216	9.00 229	11.00 279
1 1/2 40	1.25 32	1.25 32	5.00 127	7.00 178	8.11 206	10.1 257	8.7 221	11.0 279	6.0 152	8 203	1.915 48.6	0.50 12.7	16.00 7.3	37.00 16.8	6.50 165	9.00 229	9.50 241	12.00 305
2 50	1.50 38	1.50 38	8.00 203	9.00 229	10.39 264	11.0 279	11.2 285	12.3 312	8.0 203	12 305	2.406 61.1	0.63 15.9	30.00 13.6	64.00 29.0	8.00 203	10.50 266	11.50 292	14.50 368

WELDED BONNET GLOBE DIMENSIONS & WEIGHTS

Size NPS DN	A Port		B End-to-end		C Center-to-top, closed		D Center-to-top, Open		H Handwheel		K Socket weld bore	L Socket weld depth	Weight lb kg	
	800	1500	800	1500	800	1500	800	1500	800	1500			800	1500
1/4 8	0.36 9.2	0.50 13	2.88 73	3.50 89	4.57 116	6.8 173	4.84 123	7.3 185	2.5 64	6.0 152	0.555 14.1	0.38 9.5	2.50 1.14	6.00 2.7
3/8 10	0.36 9.2	0.50 13	2.88 73	3.50 89	4.57 116	6.8 173	4.84 123	7.3 185	2.5 64	6.0 152	0.690 17.5	0.38 9.5	2.50 1.14	6.00 2.7
1/2 15	0.36 9.2	0.50 13	2.88 73	3.50 89	4.57 116	6.8 173	4.84 123	7.3 185	2.5 64	6.0 152	0.855 21.7	0.38 9.5	2.50 1.14	7.50 3.4
3/4 20	0.50 13	0.50 13	3.25 83	3.50 89	6.60 168	6.8 173	6.90 175	7.3 185	4.0 102	6.0 152	1.065 27.1	0.50 12.7	4.80 2.2	7.50 3.4
1 25	0.75 19	0.75 19	3.50 89	5.00 127	6.70 170	8.21 209	7.20 183	8.84 225	4.0 102	6.0 152	1.330 33.8	0.50 12.7	5.70 2.6	15.00 6.9
1 1/4 32	1.25 32	1.25 32	5.00 127	5.25 133	8.05 204	10.8 274	8.93 227	10.76 273	6.0 152	8.0 203	1.675 42.5	0.50 12.7	12.00 5.4	23.00 10.4
1 1/2 40	1.25 32	1.25 32	5.00 127	5.25 133	8.05 204	10.8 274	8.93 227	10.76 273	6.0 152	8.0 203	1.915 48.6	0.50 12.7	12.00 5.4	23.00 10.4
2 50	1.38 35	1.50 38	5.25 133	10.00 254	9.30 236	12.8 325	10.00 254	14.00 356	6.0 152	12.0 305	2.406 61.1	0.63 15.9	17.00 7.7	57.00 26

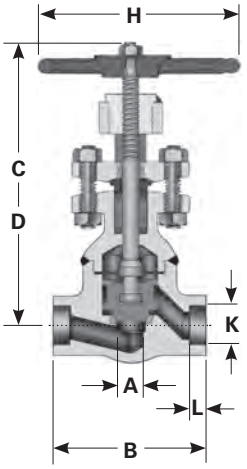

For Y-pattern globe valves, see page 12.

AVAILABLE FEATURES

	Bolted bonnet		Welded bonnet	
Class	800	1500	800	1500
Stop	2074B	3074B	2074W	3074W
Stop check	2084B	3084B	2084W	3084W
Needle	2094B	3094B	2094W	3094W
Flow control	2014B	3014B	2014W	3014W

THROTTLING GLOBE VALVES

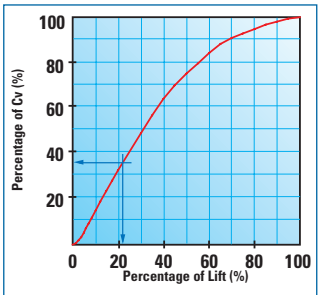

Regular style globe valves are suitable for moderate throttling applications. As a general rule, an adequately sized globe valve (i.e. with pipe velocity between 15 to 25 ft/sec for water and 200 to 300 ft/sec for steam) should not be throttled down below 35% of its maximum full open Cv capacity (approximately 20% of full stroke). Harsh throttling, below 35% of full Cv capacity, will require analysis by applications department to determine suitability under possible cavitation, flashing, noise and vibration.

VELAN FORGED STEEL Y-PATTERN GLOBE VALVES

BONNETLESS, CONVENTIONAL PORT OPENING, THREADED, SOCKET WELD OR BUTT WELD

NPS ½–4 (DN 15–100), ASME CLASSES 1690, 2680, 4500

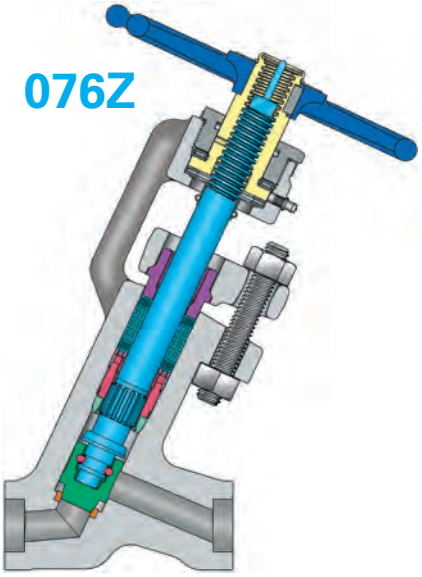

NON-ROTATING STEM
Patented for quick serviceability, (USA patent number 4356832).

For more information consult Velan's Y-pattern globe valve catalog (CAT-BG) at www.velan.com.

DESIGN FEATURES

- Designed for quick and easy maintenance – one step removal of all working parts including packing.
- All pressure containing parts within one body-bonnet forging – no joints to leak or welds to cut for servicing.
- Non rotating stem allows a non-spinning disc, ensures low torque and prevents torsional damage of the packing.
- Fully enclosed, lubricated stem drive system with needle bearings ensures low operating torque.
- Solid CoCr alloy disc, seat ring and backseat provide excellent long service life even in severe services.
- Backseat bevel on the stem, not on the disc, satisfies both API-600 and API-602 specifications.

FIGURE NUMBERS

THREADED, SOCKET WELD OR BUTT WELD CONNECTIONS			
CLASS	**STOP VALVE**	**STOP CHECK VALVE**	**NEEDLE VALVE**
1690	8076Z	8086Z	8096Z
2680	9076Z	9086Z	9096Z
4500	5076Z	5086Z	5096Z

PART	STANDARD MATERIALS
Body	A105
Seat (integral)	CoCr alloy
Disc	CoCr alloy
Stem	Gr. 410 (stainless)
Stem nut	A 439 Austenitic ductile iron Gr. D-2C
Backseat	CoCr alloy
Splined bushing	Gr. 630 (stainless)
Packing washer	Gr. 304 (stainless)
Packing	Graphite
Split gland bushing	Gr. CA15 (stainless)
Packing flange	A 105
Gland stud	Gr. B7
Gland nut	Gr. 2H
Yoke bushing	Gr. 1020 steel
Thrust bearing	Steel
Stem protector	Steel
O-ring	Nitrile rubber
Handwheel	Malleable iron
Snap ring	Steel
Name plate	Gr. 304 (stainless)

For other materials, trim and engineering data, see pages 23 – 31.

DIMENSIONS, WEIGHTS AND CV

Size NPS DN	A Port		B End-to-end		C Center-to-top		H Handwheel		K Socket weld bore	L Socket weld depth	BP Clearance, open		CF Center-to-end		Weight lb kg		Cv Flow coefficient	
	1690 2680	4500	1690 2680	4500	1690 2680	4500	1690 2680	4500			1690 2680	4500	1690 2680	4500	1690 2680	4500	1690 2680	4500
¼	0.559	0.375	4.88	5.75	9.63	11.75	6.00	6.00	0.555	0.38	3.63	3.25	3.20	4.19	15	27	1.3	1.0
8	14.2	9.5	124	146	146	298	152	152	14.1	9.5	92	83	81	106	7	12.2		
⅜	0.559	0.375	4.88	5.75	9.63	11.75	6.00	6.00	0.690	0.38	3.63	3.25	3.20	4.19	15	27	2.4	1.3
10	14.2	9.5	124	146	245	298	152	152	17.5	9.5	92	83	81	106	7	12.2		
½	0.559	0.375	4.88	5.75	9.63	11.75	6.00	6.00	0.855	0.38	3.63	3.25	3.20	4.19	15	27	2.9	1.5
15	14.2	9.5	124	146	245	298	152	152	21.7	9.5	92	83	81	106	7	12.2		
¾	0.559	0.559	4.88	7.00	9.63	14.78	6.00	10.00	1.065	0.50	3.63	6.00	3.20	3.88	15	56	5.0	5.0
20	14.2	14.2	124	178	245	375	152	254	27.1	12.7	92	152	81	99	7	25		
1	0.833	0.559	5.75	7.00	13.19	14.78	8.00	10.00	1.330	0.50	5.13	6.00	4.19	3.88	33	56	9.8	5.0
25	21.2	14.2	146	178	335	375	203	254	33.8	12.7	130	152	106	99	15	25		
1¼	1.125	0.833	7.25	10.13	16.63	18.88	12.00	12.00	1.675	0.50	7.57	7.00	4.94	6.57	67	94	20	9.8
32	28.6	21.2	184	257	422	480	305	305	42.5	12.7	192	178	125	167	30	43		
1½	1.125	1.125	7.25	12.00	16.63	20.75	12.00	18.00	1.915	0.50	7.57	8.00	4.94	8.00	67	148	20	20
40	28.6	28.6	184	305	422	527	305	457	48.6	12.7	192	203	125	203	30	67		
2	1.688	1.125	10.13	12.00	19.73	20.75	12.00	18.00	2.406	0.63	7.50	8.00	6.57	8.00	110	148	60	26
50	42.9	28.6	257	305	501	527	305	457	61.1	15.9	190	203	167	203	50	67		
2½[1]	1.688	1.50	12.00	12.00	20.69	20.75	16.00[2]	16.00[2]	2.906	0.63	7.25	7.25	8.00	8.00	148[3]	148	60	47
65	42.9	38.1	305	305	526	527	406	406	73.8	15.9	184	184	203	203	67	67		
3[1]	1.688	1.50	12.00	12.00	20.69	20.75	16.00[2]	16.00[2]	(4)	(4)	7.25	7.25	8.00	8.00	148[3]	148	60	47
80	42.9	38.1	305	305	526	527	406	406			184	184	203	203	67	67		
4	1.688	1.50	12.00	12.00	20.69	20.75	16.00[2]	16.00[2]	(4)	(4)	7.25	7.25	8.00	8.00	148	148	60	47
100	42.9	38.1	305	305	526	527	406	406			184	184	203	203	67	67		

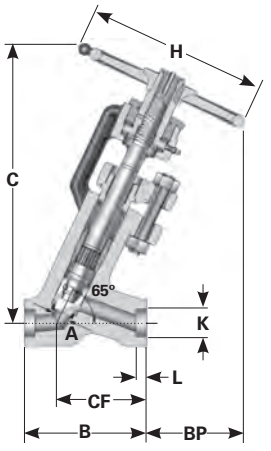

(1) For Classes 1690 and 2680, dimensions are as shown, or same as for NPS 2 (DN 50) valve, depending on end connection.
(2) Impactor handle. *(3) For butt weld weight is 110 lbs (50 kg).* *(4) Butt weld or flanged connection only in these sizes.*

 Velan reserves the right to change this information without notice. © 2014 Velan Inc. All rights reserved.

VELAN FORGED STEEL 45° INCLINED GLOBE VALVES

CONVENTIONAL PORT OPENING, THREADED, SOCKET WELD OR BUTT WELD

NPS ½–2 (DN 15–50), ASME CLASSES 800, 1690, 2680

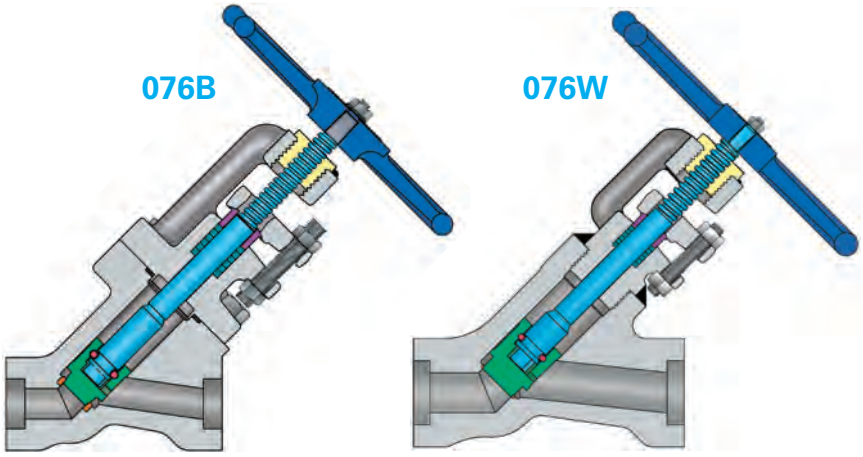

45° BOLTED BONNET

45° WELDED BONNET

PART	STANDARD MATERIALS
Body	A105
Bonnet	A105
Seat (integral)	CoCr alloy
Disc	CoCr alloy
Stem	Gr. 410 (stainless)
Stem nut	CS CD plated
Gland bushing	Gr. 416 (stainless)
Yoke bushing	AL Brz C64200
Cap Screw	Gr. B7
Gasket	Gr. 304 & Graphite
Packing	Graphite
Packing flange	CS
Gland stud	Gr. B6
Gland nut	Gr. 2H
Handwheel	Malleable iron
Name plate	Aluminum

For other materials, trim and engineering data, see pages 23 – 31.

BOLTED BONNET GLOBE 45° INCLINED VALVE DIMENSIONS, WEIGHTS & CV

Size NPS DN	A Port	B End-to-end		C Center-to-top, closed		D Center-to-top, open		H Handwheel		K Socket weld bore	L Socket weld depth	BP Clearance, open		CF Center-to-end		Weight lb kg		Cv Flow coefficient
	800 & 1690	800	1690	800	1690	800	1690	800	1690			800	1690	800	1690	800	1690	
½ 15	0.559 14.2	4.00 102	4.88 124	6.76 1.72	8.81 224	7.20 183	9.25 235	4.00 102	6.00 152	0.855 21.7	0.38 9.5	4.22 107	5.50 140	2.88 73	3.50 99	12.00 5.4	15.00 7	3.4
¾ 20	0.559 14.2	4.00 102	4.88 124	6.76 1.72	8.81 224	7.20 183	9.25 235	4.00 102	6.00 152	1.065 27.1	0.50 12.7	4.22 107	5.5 140	2.88 73	3.50 99	12.00 5.4	15.00 7	5.8
1 25	0.833 21.2	4.88 124	5.75 146	7.16 182	10.6 269	7.78 198	11.22 285	4.00 102	8.00 203	1.330 33.8	0.50 12.7	4.17 106	6.75 172	3.50 89	4.19 106	15.00 7	22.00 10	11.3
1¼ 32	1.125 28.6	5.75 146	7.75 197	9.05 230	11.72 298	9.85 250	12.51 318	6.00 152	8.00 203	1.675 42.5	0.50 12.7	5.40 137	6.73 171	4.19 106	6.00 152	33.00 15	36.00 16	26.5
1½ 40	1.125 28.6	5.75 146	7.75 197	9.05 230	11.72 298	9.85 250	12.51 318	6.00 152	8.00 203	1.915 48.6	0.50 12.7	5.40 137	6.73 171	4.19 106	6.00 152	33.00 15	36.00 16	29
2 50	1.50 38.1	7.25 184	10.13 275	11.72 298	14.32 364	12.78 325	15.38 391	8.00 203	12.00 305	2.406 61.1	0.63 15.9	7.00 172	7.58 193	5.50 140	7.38 187	67.00 30	72.00 37	54

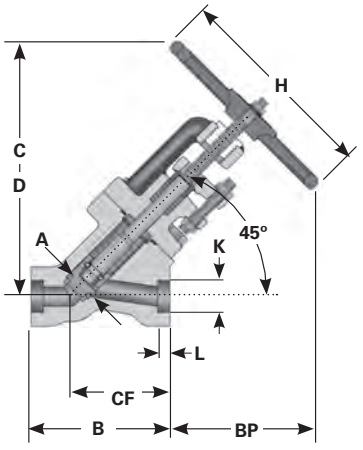

WELDED BONNET GLOBE 45° INCLINED VALVE DIMENSIONS, WEIGHTS & CV

Size NPS DN	A Port	B End-to-end	C Center-to-top, closed	D Center-to-top, open	H Handwheel	K Socket weld bore	L Socket weld depth	BP Clearance, open	CF Center-to-end	Weight lb kg	Cv Flow coefficient
	1690 & 2680	1690 & 2680	1690 & 2680	1690 & 2680	1690 & 2680			1690 & 2680	1690 & 2680	1690 & 2680	
½ 15	0.559 14.2	4.88 124	7.75 197	8.19 208	6.00 152	0.855 21.7	0.38 9.5	4.00 102	3.50 99	9.50 4	3.4
¾ 20	0.559 14.2	4.88 124	7.75 197	8.19 208	6.00 152	1.065 27.1	0.50 12.7	4.00 102	3.50 99	9.50 4	5.8
1 25	0.833 21.2	5.75 146	9.73 247	10.38 264	8.00 203	1.330 33.8	0.50 12.7	5.19 132	4.19 106	18.00 8	11.3
1¼ 32	1.125 28.6	7.75 197	11.37 28	12.22 310	8.00 203	1.675 42.5	0.50 12.7	6.38 162	6.00 152	37.00 17	26.5
1½ 40	1.125 28.6	7.75 197	11.37 28	12.22 310	8.00 203	1.915 48.6	0.50 12.7	6.38 162	6.00 152	37.00 17	29
2 50	1.50 38.1	10.13 275	14.19 360	15.26 388	12.00 305	2.406 61.1	0.63 15.9	7.45 189	7.38 187	55.00 25	54

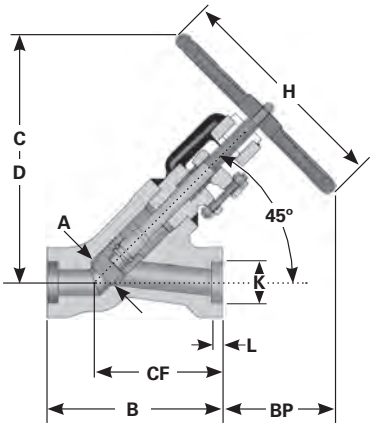

Velan reserves the right to change this information without notice. © 2014 Velan Inc. All rights reserved.

VELAN FORGED STEEL CHECK VALVES

CONVENTIONAL PORT OPENING, PISTON, BALL OR SWING

NPS ¼–2 (DN 8–50), ASME CLASSES 800, 1500
THREADED OR SOCKET WELD FLANGED ASME CLASSES 150, 300, 600, 1500

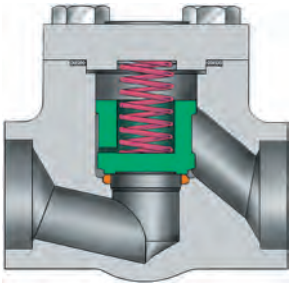

PISTON BOLTED COVER

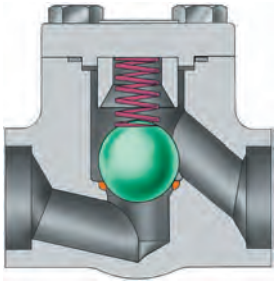

BALL TYPE BOLTED COVER

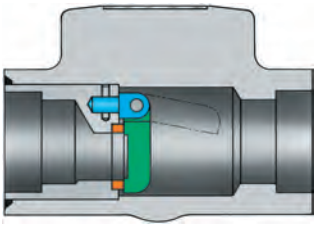

COVERLESS SWING CHECK

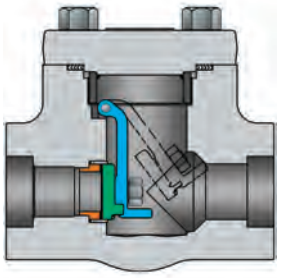

SWING CHECK BOLTED COVER

SPECIFICATIONS

Type	Bolted cover	Coverless
Piston check	034B	—
Ball check	024B	—
Swing check	114B	114W

For other materials, trim and engineering data, see pages 23–31.

PART	STANDARD MATERIALS
Body	A105
Cover	A105
Seat, integral	CoCr alloy
Disc(4)	CA15HT or CoCr alloy(6)
Ball(1)	Gr. 440C
Spring(5)	Gr. 302
Cap screw(3)	Gr. B7
Gasket(3)	Gr. 304 (stainless and graphite)
Swing holder(2)	CA15HT
Swing pin(2)	Gr. 410

(1) Ball type only (2) Swing type only (3) Bolted bonnet only
(4) Piston or swing type only (5) Piston or ball type only
(6) Bolted bonnet swing check disc CoCr alloy Gr. 6 only.

BOLTED COVER PISTON, BALL, AND SWING CHECK DIMENSIONS AND WEIGHTS

Size	A Port				B End-to-end				C Center-to-top, bolts				K Socket weld	L Socket weld	Weight lb/kg				Flanged Face-to-face			
NPS DN	Piston & ball		Swing check		Piston & ball		Swing check		Piston & ball		Swing check		Piston, ball & swing check		Piston and ball		Swing check(3)		Piston, ball & swing check			
	800	1500	800	1500	800	1500	800	1500	800	1500	800	1500	Bore	Depth	800	1500	800	1500	150(2)	300	600	1500
¼ 8	0.36 9.2	0.50 12.7	–	–	3.13 80	4.00 102	–	–	1.90 48	2.70 68	–	–	0.555 14.1	0.38 9.5	2.5 1.2	6.6 3.0	–	–	4.00 102	–	–	–
⅜ 10	0.36 9.2	0.50 12.7	–	–	3.13 80	4.00 102	–	–	1.90 48	2.70 68	–	–	0.690 17.5	0.38 9.5	2.5 1.2	6.6 3.0	–	–	4.00 102	–	–	–
½ 15	0.36 9.2	0.50 12.7	0.50 12.7	0.50 12.7	3.13 80	4.00 102	3.50 89	6.00 152	1.90 48	2.70 68	2.50 64	3.70 94	0.855 21.7	0.38 9.5	2.5 1.2	6.6 3.0	4.6 2.1	4.4 2.0	4.25 108	6.00 152	6.50 165	8.50 216
¾ 20	0.50 12.7	0.50 12.7	0.50 12.7	0.50 12.7	3.25 83	5.00 127	3.50 89	6.00 152	2.30 58	2.90 74	2.50 64	3.70 94	1.065 27.1	0.50 12.7	3.9 1.8	6.6 3.0	4.6 2.1	6.6 3.0	4.62 117	7.00 178	7.50 191	9.00 229
1 25	0.75 19.1	0.75 19.1	0.75 19.1	0.75 19.1	3.50 89	6.00 152	5.00 127	6.00 152	2.60 66	3.50 89	3.50 89	3.70 94	1.330 33.8	0.50 12.7	4.8 2.2	17 8	12 5.4	12 5.4	5.00 127	8.00 203	8.50 216	10.00 254
1¼ 32	1.25 31.8	1.25 31.8	1.25 31.8	1.25 31.8	5.00 127	7.00 178	5.25 133	7.00 178	3.70 94	4.20 107	3.40 86	3.70 94	1.675 42.5	0.50 12.7	13 5.9	26 12	15 7	19 9	5.50 140	8.50 216	9.00 229	11.00 279
1½ 40	1.25 31.8	1.25 31.8	1.25 31.8	1.25 31.8	5.00 127	7.00 178	5.25 133	7.00 178	3.70 94	4.20 107	3.40 86	4.20 107	1.915 48.6	0.50 12.7	11 5.0	26 12	15 7	19 9	6.50 165	9.00 229	9.50 241	12.00 305
2 50	1.50 38.1	1.50 38.1	1.50 38.1	1.50 38.1	8.00 203	9.00 229	6.00 152	9.00 229	4.80 122	5.40 137	4.30 109	5.20 132	2.406 61.1	0.63 15.9	22 10.0	41 19	21 10	26 12	8.00 203	10.50 267	11.50 292	14.50 368

CLASS 800 1975 psi @ 100°F
CLASS 1500 3705 psi @ 100°F

(1) For swing check valves Classes 300, 600 and 1500 face-to-face dimensions are the same as for piston and ball check valves, for Class 150 swing check valves contact the factory.

(2) Standard face-to-face for welded flange only.

(3) Welded cover also available.

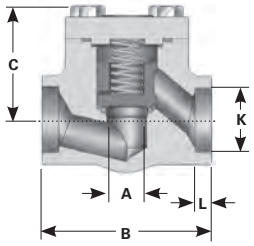

COVERLESS SWING CHECK DIMENSIONS AND WEIGHTS (CLASS 800)

Size NPS/DN	A Port	B End-to-end	C Center-to-top, body	K Socket weld bore	L Socket weld	Weight lb/kg
¼ 8	0.50 13	3.25 83	1.65 42	0.555 14.1	0.38 9.5	3.5 1.6
⅜ 10	0.50 13	3.25 83	1.65 42	0.690 17.5	0.38 9.5	3.5 1.6
½ 15	0.50 13	3.25 83	1.65 42	0.855 21.7	0.38 9.5	3.5 1.6
¾ 20	0.50 13	3.25 83	1.65 42	1.065 27.1	0.50 12.7	3.5 1.6
1 25	0.75 19	3.50 89	1.70 43	1.330 33.8	0.50 12.7	3.0 1.4
1¼ 32	1.25 32	5.00 127	2.56 65	1.675 42.5	0.50 12.7	11.0 5.0
1½ 40	1.25 32	5.00 127	2.56 65	1.915 48.6	0.50 12.7	11.0 5.0
2 50	1.50 38	5.25 133	2.56 65	2.406 61.1	0.63 15.9	10 4.5

 Velan reserves the right to change this information without notice. © 2014 Velan Inc. All rights reserved.

VELAN FORGED STEEL INCLINED PISTON CHECK VALVES

FOR HORIZONTAL AND VERTICAL LINES

NPS ¼ – 4 (DN 8 – 100), THREADED, SOCKET WELD OR BUTT WELD
ASME CLASSES 1690, 2680, 4500

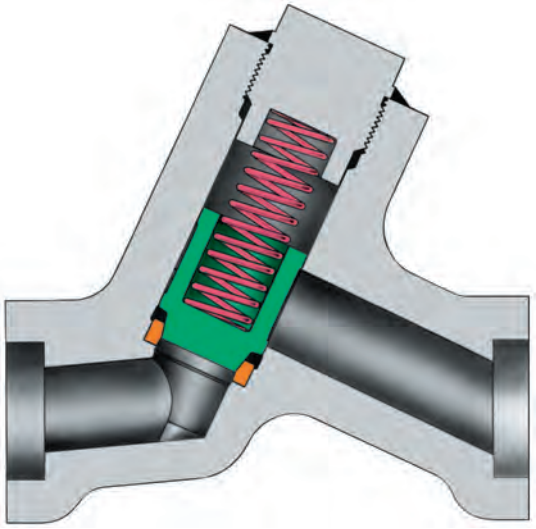



PART	STANDARD MATERIALS			
Body	A105	A182 Gr. F22	A182 Gr. F316	A 182 Gr. F91
Cover	A105	A182 Gr. F22	A182 Gr. F316	A 182 Gr. F91
Disc	CoCr alloy			
Seat, integral	CoCr alloy			
Spring (1)	Gr. 302 (stainless)	Inconel X750	Gr. 302 (stainless)	Inconel X750

For other materials, trim and engineering data, see pages 23 – 31.

DESIGN FEATURES

- Solid CoCr alloy disc, fully guided for fast and full seating, even without spring.
- High Cv.
- Self-draining waterways.

CLASS	1690	2680	4500
Figure number	8036W	9036W	5036W

DIMENSIONS, WEIGHTS AND CV

Size NPS DN	Port opening		End-to-end		Center-to-top		Socket weld bore	Socket weld depth	Approximate weight lb/kg		Cv Flow coefficient	
	1690 & 2680	4500	1690 & 2680	4500	1690 & 2680	4500			1690 & 2680	4500	1690 & 2680	4500
¼ 8	0.559 14.2	–	4.88 124	–	3.61 92	–	0.555 14.1	0.38 9.5	6.5 3.0	–	1.0	–
⅜ 10	0.559 14.2	0.375 9.5	4.88 124	5.75 146	3.61 92	4.26 108	0.690 17.5	0.38 9.5	6.3 2.9	5 2.3	1.8	1.5
½ 15	0.559 14.2	0.559 14.2	4.88 124	7.00 178	3.61 92	5.5 140	0.855 21.7	0.38 9.5	6.1 3	25 11	2.1	2.1
¾ 20	0.559 14.2	0.559 14.2	4.88 124	7.00 178	3.61 92	5.5 140	1.065 27.1	0.50 12.7	5.7 2.6	25 11	4.3	4.3
1 25	0.833 21.2	0.559 14.2	5.75 146	7.00 178	4.75 121	5.5 140	1.330 33.8	0.50 12.7	10 4.5	25 11	8.4	4.3
1¼ 32	1.125 28.6	–	7.25 184	–	5.88 150	–	1.675 42.5	0.50 12.7	18.5 8.4	–	17	–
1½ 40	1.125 28.6	1.125 28.6	7.25 184	10.13 257	5.88 150	6.88 175	1.915 48.6	0.50 12.7	18.5 8.4	42 19	19	18
2 50	1.688 42.9	1.50 38.1	10.13 257	12.00 305	7.19 183	8.44 214	2.406 61.1	0.63 15.9	36 16.3	87 40	45	36
2½ (1) 65	1.688 42.9	1.50 38.1	12.00 305	12.00 305	8.06 205	8.44 214	2.906 73.8	0.63 15.9	94 43	110 (3) 50	45	36
3 (1) 80	1.688 42.9	1.50 38.1	12.00 305	12.00 305	8.06 205	8.44 214	(2)	(2)	94 43	110 (3) 50	45	36
4 100	1.688 42.9	1.50 38.1	12.00 305	12.00 305	8.06 205	8.44 214	(2)	(2)	94 43	110 50	45	36

(1) For Classes 1690 and 2680, dimensions are as shown, or same as for NPS 2 (DN 50) valve, depending on end connection.
(2) Butt weld or flanged connection only in these sizes.
(3) For butt weld weight is 87 lbs. (40 kg).

Velan reserves the right to change this information without notice. © 2014 Velan Inc. All rights reserved.

VELAN SPECIAL SERVICES

VALVES FOR NUCLEAR POWER PLANTS

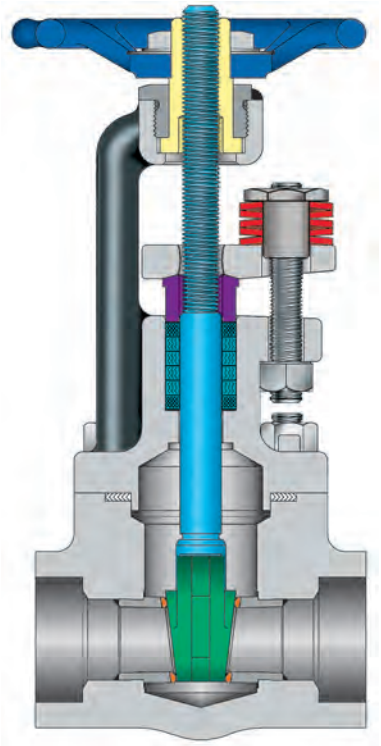

GATE VALVE

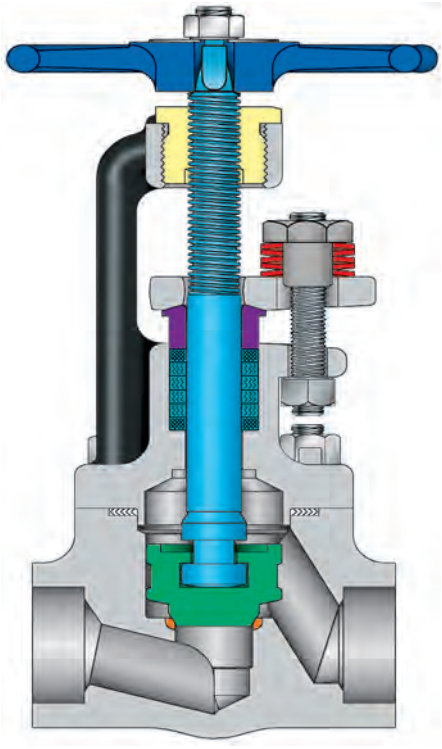

GLOBE VALVE

FORGED CARBON, ALLOY AND STAINLESS STEEL GATE GLOBE, AND CHECK VALVES FOR NUCLEAR POWER

NPS ¼–2 (DN 8–50) ASME CLASSES 150–1500



DESIGN FEATURES

- Sturdy bonnet arms.
- Suitable for electric actuation.
- More repacking space.

Gate valves

- Seal welded seats.
- CoCr alloy or cobalt free wedge and seats.

Globe valves

- CoCr alloy or cobalt free seats and discs.
- Stop, stop-check, needle, flow control
- Y-Pattern models for ASME Classes 1500 and 2500

OPTIONS

- Double packing with leak-off.
- Live-loading for nuclear and other critical services.
- Packing blowout fitting.

Live-loading option

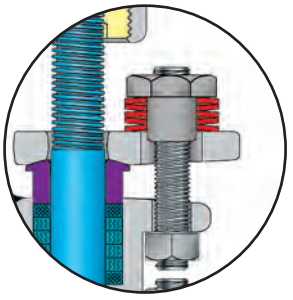

for gate and globe valves

Velan reserves the right to change this information without notice. © 2014 Velan Inc. All rights reserved.

VELAN SPECIAL SERVICES

BELLOWS SEAL COMPACT FORGED STEEL 0 LEAKAGE VALVES

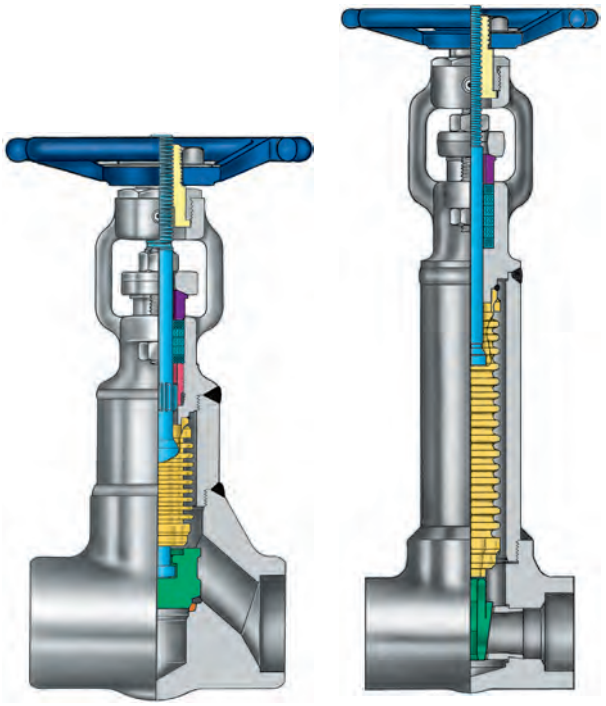

GLOBE VALVE

GATE VALVE

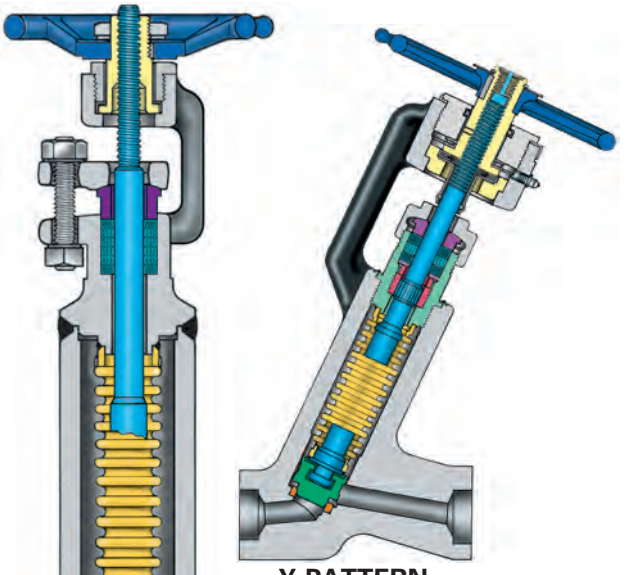

Y-PATTERN

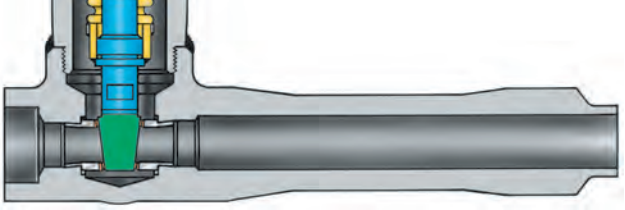

DRAIN VALVE

FOR HIGH PRESSURE, NUCLEAR, AND OTHER CRITICAL SERVICE

GATE VALVES - API 602, CLASSES 800 – 1500, FLANGED ASME CLASSES 150 – 1500

GLOBE VALVES - ASME CLASSES 150 – 600

EXTENDED BODY (DRAIN) VALVES - API 602, CLASSES: 800 – 1500

Y-PATTERN VALVES - ASME CLASSES: 1500 – 2500

A valve with a bellows to seal off the stem enclosure is an ideal choice whenever leakage to the atmosphere is intolerable due to toxicity, chemical corrosion, radioactivity, other health or ecological reasons. In addition, seal welding the body-bonnet seal makes the valve hermetically sealed. The bellows is welded to the stem and to the bottom of the bonnet. Velan has been a leader in bellows seal valves since pioneering the technology in the 1950s.

DESIGN FEATURES

- **No torsion of bellows.** Proper stem guiding of the non-rotating stem prevents torsion of bellows and ensures long cycle life on all valves.
- **Long cycle life bellows.** Designed for and successfully tested in highpressure/temperature applications.
- **The lift** is 50% in extension and 50% in compression.
- **Bellows available in SS 321, Inconel or Hastelloy.**
- **Two secondary stem seals:** a) backseat (stem bevel) protects from line pressure when open and b) stem packing.

CYCLE LIFE

- Axial movement of the bellows is limited to a maximum of 20 to 25% of the free length, depending on pressure-temperature and desired life cycle.
  Velan bellows are designed for:
  - 10,000 cycles for NPS ½–2 (DN 15–50) globe valves,
  - 5,000 cycles for bonnetless globe valves
  - 3,000 cycles for NPS ½–2 (DN 15–50) gate valves.

For more information, see our Bellows seal valve catalog (VEL-BS) at www.velan.com

Velan reserves the right to change this information without notice. © 2014 Velan Inc. All rights reserved.

VELAN SPECIAL SERVICES

BOILER PLANT SERVICE BLOWOFF VALVES

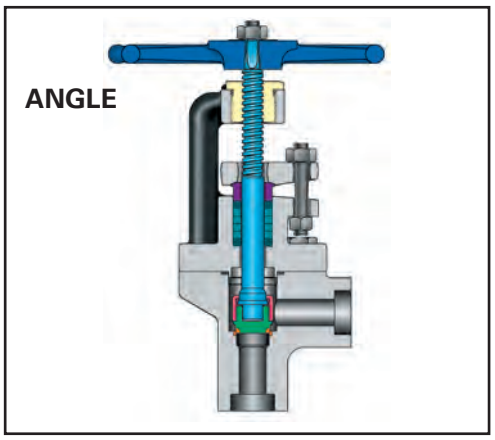

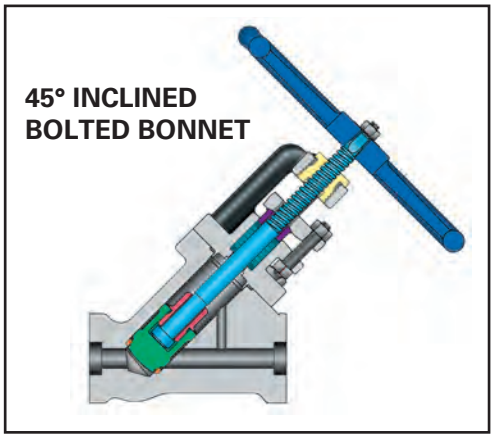

FIGURE NUMBERS

CLASS	ANGLE	45° INCLINED
600	2215B	2216B
1500	3215B	3216B

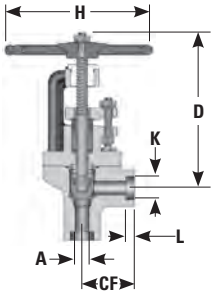

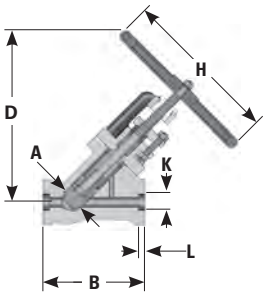

45° INCLINED VALVE DIMENSIONS

SIZE NPS DN	A Port	CF End-to-end weld end	CF Face-to-face flanged		D Center-to-top, open	H Handwheel diameter	K Socket weld bore	L Socket weld depth
	600 & 1500	600 & 1500	600	1500	600 & 1500	600 & 1500	600 & 1500	600 & 1500
1 25	1.50 38.1	8.00 203	12.00 305	12.00 305	15.20 386	12.00 305	1.330 33.8	0.50 12.7
1½ 40	1.50 38.1	8.00 203	12.00 305	12.00 305	15.20 386	12.00 305	1.915 48.6	0.50 12.7
2 50	1.50 38.1	8.00 203	12.00 305	14.50 368	15.20 386	12.00 305	2.406 61.1	0.63 15.9

NPS ½–2 (DN 15–50) FLANGED OR WELDED ENDS

ASME CLASSES 150–1500

Velan boiler blowoff valves meet all applicable specifications of the ASME boiler code, U.S. military standards (listed on qualified product list), U.S. Coast Guard, American Bureau of Shipping and Lloyd's.

Flanged or welded ends	Class 600*	Class 1500	Class 2500
Basic steam rating	535 psi @ 850°F	1340 psi @ 850°F	2230 psi @ 850°F
Max. boiler pressure	935 psi	2455 psi	3206 psi
Maximum non-shock	1480 psi @ 100°F	3705 psi @ 100°F	6170 psi @ 100°F

** Use for Classes 300 and 400 boilers.*

APPLICATIONS

- Power and utility boilers
- Cogeneration systems
- Chemical recovery boilers
- Wood-fired boilers
- Solid waste fuel-firing systems
- Circulating fluidized bed (CFB) boilers
- Industrial waste recovery and incineration plants

TYPICAL SERVICE

- Blowoff
- Acid cleaning
- Steam sampling
- Water/steam shut-off
- Gauge shut-off
- Main stop drains
- Chemical feed
- Vents
- Feedwater

Many installations use a tandem combination of two valves. he valve closer to the boiler should be wide open first and then the second valve opened slowly. At the end of the blowoff period, a reverse procedure should be used.

DESIGN FEATURES

These special blowoff valves are available in bolted bonnet angle and streamlined flow 45° inclined designs for Class 600 and 1500 primary service and in bonnetless angle and inclined designs for Class 2500.

- CoCr alloy seats and fully-guided CoCr alloy discs resist the excessive corrosion and erosion effects aggravated by grid and boiler scale particles and high temperature changes.

***NOTE:** See page 12 for Y-pattern globe valves or for more information consult Velan's Y-pattern globe valve catalog (CAT-BG) at www.velan.com.*

ANGLE VALVE DIMENSIONS

SIZE NPS DN	A Port	CF Center-to-end weld end	CF Center-to-face flanged		D Center-to-top, open	H Handwheel diameter	K Socket weld bore	L Socket weld depth
	600 & 1500	600 & 1500	600	1500	600 & 1500	600 & 1500	600 & 1500	600 & 1500
½ 15	0.453 11.5	2.00 51	3.25 83	4.25 108	7.48 190	6.00 152	0.855 21.7	0.38 9.5
¾ 20	0.625 15.9	2.50 64	3.75 95	4.50 114	7.48 190	6.00 152	1.065 27.1	0.50 12.7
1 25	1 25.4	3.00 76	4.25 108	5.00 127	9.50 241	8.00 203	1.330 33.8	0.50 12.7
1¼ 32	1.448 36.8	3.50 89	4.50 114	5.50 140	10.56 268	12.00 305	1.675 42.5	0.50 12.7
1½ 40	1.448 36.8	3.50 89	4.75 121	6.00 152	10.56 268	12.00 305	1.915 48.6	0.50 12.7
2 50	1.750 44.5	4.50 114	5.75 146	7.25 184	11.06 281	12.00 305	2.406 61.1	0.63 15.9

 Velan reserves the right to change this information without notice. © 2014 Velan Inc. All rights reserved.

VELAN SPECIAL SERVICES

CONTINUOUS BLOWDOWN AND BOILER PLANT SERVICE VALVES

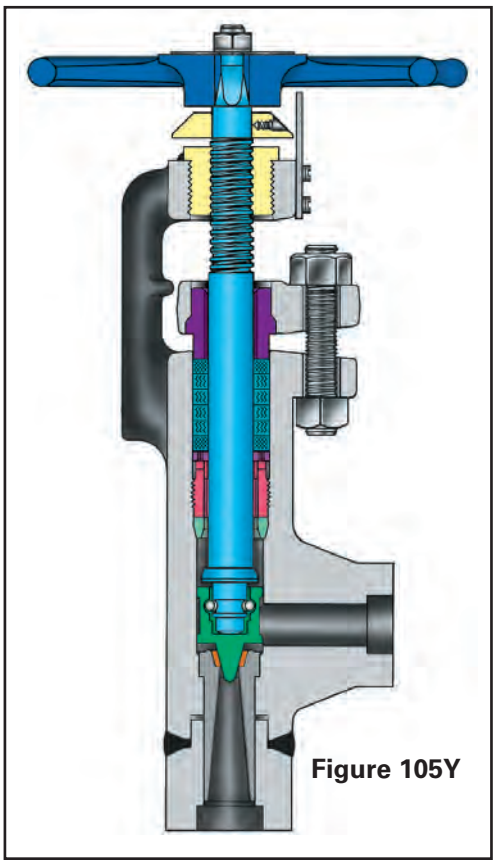

Figure 105Y

NPS ½–2 (DN 15–50) FORGED ANGLE

ASME CLASSES 600, 1500, 2500

This valve is designed for continuous blowdown but can also be used for sampling and boiler feed pump bypass relief where high pressure drop causes erosion and cavitation which can destroy conventional globe valves. It incorporates a hardfaced CoCr alloy disc and seat and a venturi diffuser from stainless steel type 316. Orifice range: 1/8 to 1 1/8" (3.18 to 28.58 mm), depending on the capacity required.

OTHER VELAN FORGED VALVES FOR BOILERS PLANT SERVICE

- **Gate and globe, NPS ¼–2 (DN 8–50)**
  Bolted and welded bonnet, ASME Classes 800–1500
  –see Pressure seal and bolted bonnet catalog
- **Gate and globe, NPS 2½–24 (DN 65–600)**
  Bolted or pressure seal, ASME Classes 600–4500
- **Swing, piston and tilting disc check valves, NPS ½–24 (DN 15–600)**
  Bolted or pressure seal, ASME Classes 600–4500
- **Y-Pattern bonnetless globe valves, NPS ¼–4 (DN 8–100)**, ASME Classes 1690–4500
- **Y-Pattern piston check, NPS ¼–4 (DN 8–100)**
  ASME Classes 600–4500

For more details about other Velan forged valves for boilers plant service see our other product catalogs on velan.com

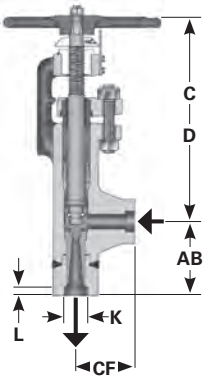

Size NPS DN	AB Center-to-bottom SW	AB Center-to-bottom NPT & BW	CF Center-to-end	C Center-to-top, closed	D Center-to-top, open	K Socket weld bore	L Socket weld depth	Weight lb kg
½ 15	2.25 57	–	3.19 81	11.9 302	12.6 320	0.855 21.7	0.38 9.5	10
¾ 20	3.12 79	3.62 92	3.19 81	11.9 302	12.6 320	1.065 27.1	0.50 12.7	13
1 25	3.92 100	4.42 112	3.19 81	11.9 302	12.6 320	1.330 33.8	0.50 12.7	13
1½ 40	4.95 126		3.00 76	15.6 396	16.5 419	1.675 42.5	0.50 12.7	13
2 50	6.50 165		5.00 127	17.1 434	18.50 470	2.406 61.1	0.63 15.9	13

WIDE OPEN CAPACITIES (%) VS HANDWHEEL TURNS (↻)

NPS ½–1 valve

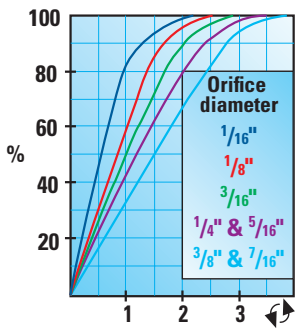

NPS 1½ valve

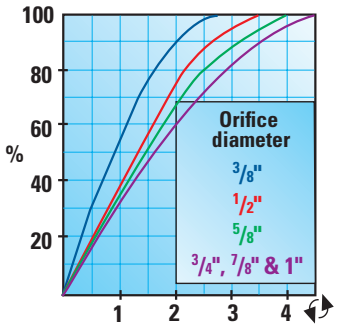

NPS 2 valve

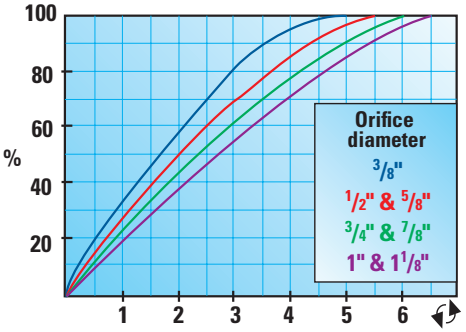

VELAN SPECIAL SERVICES

FORGED CRYOGENIC VALVES

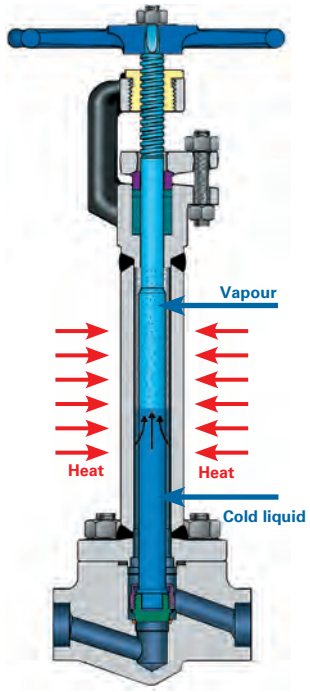

GLOBE VALVE

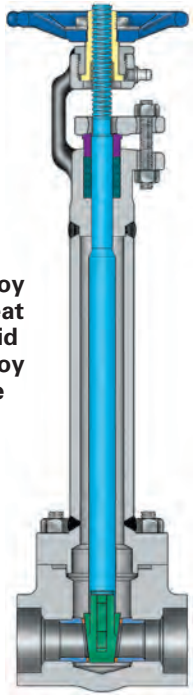

With CoCr alloy faced seat and solid CoCr alloy wedge

GATE VALVE

NOTE: For more information, see our cryogenic valves catalog (VEL-CRYO) at www.velan.com.

FORGED AUSTENITIC STEEL GATE, GLOBE, AND CHECK VALVES NPS ½–2 (DN 15–50)

ASME CLASSES 150–1500

The production, transport and storage of liquified gases such as Oxygen, Nitrogen, Argon, Natural Gas, Hydrogen or Helium down to -425°F (-254°C) presents several technical problems. Velan specially adapted extended bonnet forged valves offer safe and efficient service.

DESIGN FEATURES

- **Extended bonnets** with sufficient gas column length, usually specified by customer, are supplied for all valves to keep stem packing at sufficient distance away from the cold fluid to remain functional.
- **Solid CoCr alloy** wedges on NPS ½–2 (DN 15–50) valves operate with no galling in cryogenic service.
- **PCTFE and dualseal disc inserts (optional)** for globe and check valves check discs.
- **Cleaning:** All cryogenic valves are thoroughly degreased and cleaned and pipe ends are sealed to prevent contamination.

MATERIALS

- **Body and bonnet:** Austenitic stainless steel forgings used for bodies and bonnets offer excellent impact strength, minimal heat loss and protection against corrosion.
- **Stem:** To reduce galling, stems are made from advanced Nitronic 50 (grade XM-19 A479) with high tensile even at extreme low temperatures, excellent low friction and galling-free movement at points of stem contact.
- **Wetted parts:** All austenitic stainless steel and CoCr alloy.
- **Yoke bushings:** Bronze.
- **Packing:** PTFE or other plastic packing protected from freezing by a column of insulating gas.
- **Seating faces:** CoCr alloy is used to prevent seizing and galling. When extremely tight shut-off is required, globe and check valves may be supplied with PCTFE, PTFE or other soft inserts.
- **Bolting:** Strain-hardened austenitic stainless steel.
- **Lubrication of yoke bushing nut (yoke nut):** Exxon, Nebula EPI; Shell, Darina EPI; and Lubriplate, No. 930-AA or 930-AAA.

TABLE OF LIQUIFIED GASES

Type	Boiling point		Liquid density lb/ft³
	°C	°F	
Natural gas (LNG)	-168.0	-270	26.00
Methane (CH_4)	-161.5	-258	26.20
Oxygen (0_2)	-182.9	-296	71.20
Argon (A)	-185.9	-303	87.40
Helium (He)	-268.9	-452	7.82
Carbon Dioxide (CO_2)	-78.5	-109	50.60
Air	-194.4	-318	57.87
Nitrogen (N_2)	-195.8	-320	50.45
Hydrogen (H_2)	-252.7	-423	4.43
Absolute zero	**-273.16**	**-460**	—

Velan reserves the right to change this information without notice. © 2014 Velan Inc. All rights reserved.

VELAN SPECIAL SERVICES

HYDROFLUORIC (HF) ACID PROCESSING VALVES

Hydrofluoric acid is one of the strongest and most corrosive acids. Industries using HF acid in their manufacturing process have placed an increasing emphasis on safety in using this product.

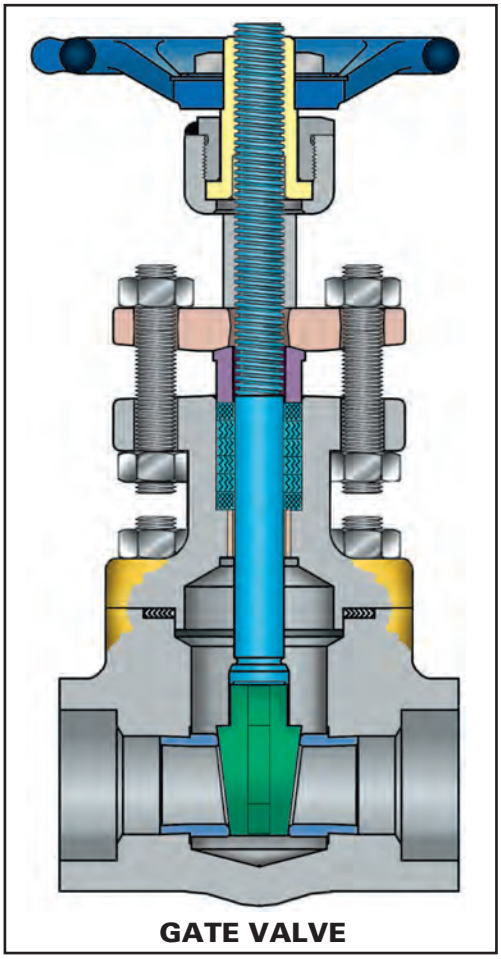

GATE VALVE

HF ACID GATE, GLOBE AND CHECK VALVES

NPS ½–2 (DN 15–50), ASME CLASSES 150–800

Fugitive emissions are a critical factor in the performance of any HF Acid valve and at Velan, we have been committed to reducing emissions beyond the industry standards, and providing the highest quality products to our customers for over 50 years. Velan offers a comprehensive line of Phillips and UOP approved API 602 gate, globe and check HF acid valves with several benefits.

DESIGN FEATURES:

- **Stem drive:** Two-piece allows for replacement of yoke bushing in-line, removal of handwheel without affecting position of valves (closed or opened).
- **Rising stem:** Makes for easy visibility for open-close indications.
- **Gland:** Two piece gland bushing/packing flange is self-aligning to prevent stem damage for cocked gland.
- **Stem made from hardened Monel K500** for strength and durability.
- **Nickel overlay in stem hole for carbon steel valves** to combat severe alkylation conditions.
- **HF acid detecting paint** to ensure valve sealing integrity.
- **Bonnet**: Large extended type bonnet grade.
- **Bonnet joint:** Encapsulated gasket design.
- **Body:** High quality Monel or A105 normalized body with API 602 wall thickness for maximum service.
- **Wedge** solid Monel.
- **Seat rings:** Made of solid Monel 400.

NOTE: *For more information go to www.velan.com to download a copy of Velan's HF acid gate, globe and check valves flyer (FLY-HFA).*

OPTIONAL DESIGN FEATURES

1. Nickel overlay packing box liner

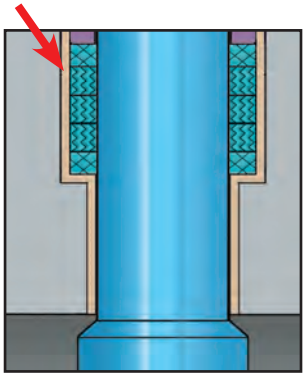

2. Grease injector & lantern ring
Where grease injection is a requirement (UOP only).

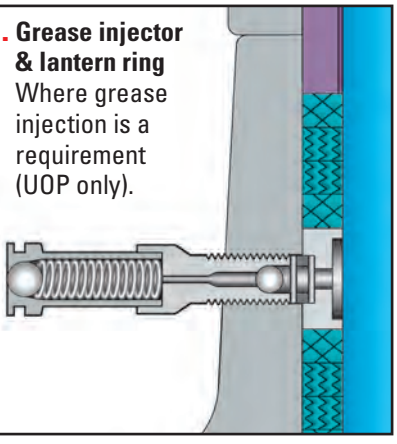

3. CTFE seat insert
Resists abrasion and corrosion

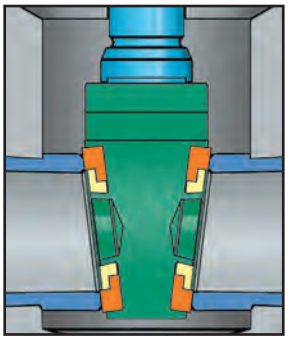

Velan reserves the right to change this information without notice. © 2014 Velan Inc. All rights reserved.

VELAN SPECIAL SERVICES

CUSTOM DESIGN FABRICATED VALVES

Take advantage of increased flexibility with Velan custom-design fabricated valves

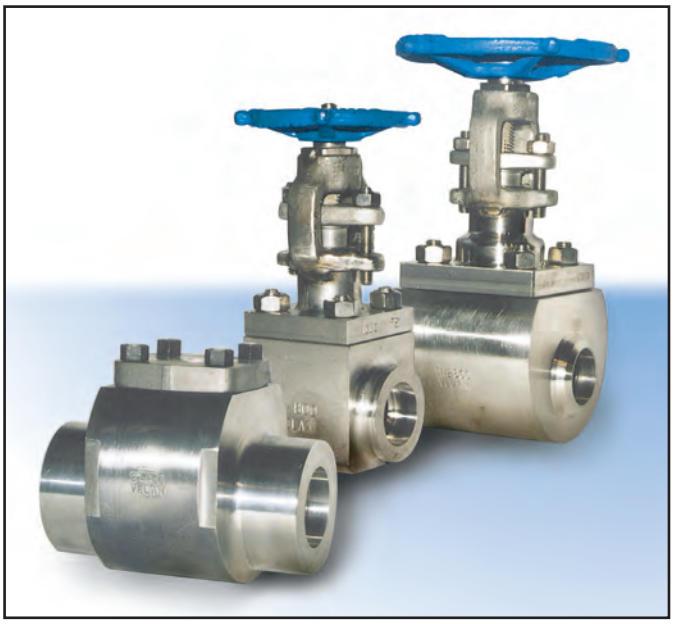

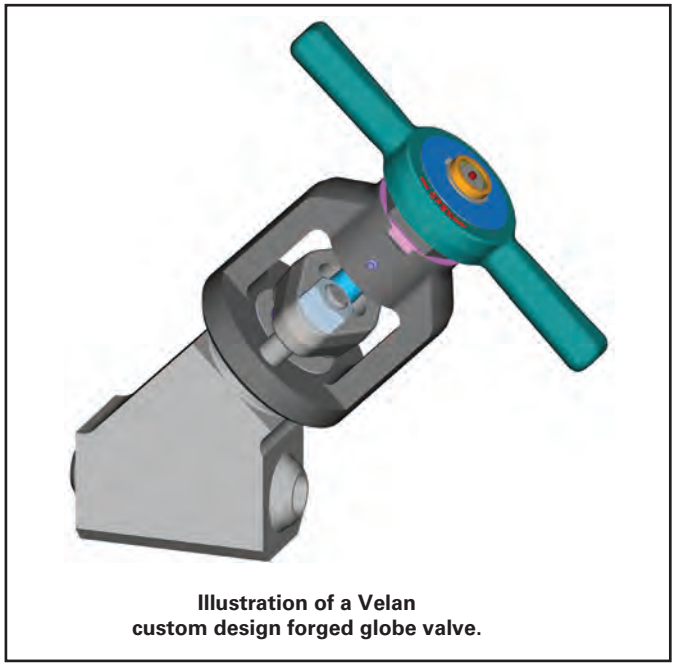

Illustration of a Velan custom design forged globe valve.

FABRICATED GATE, GLOBE, CHECK VALVES

NPS ½–2 (DN 8–50), ASME CLASSES 150–2680

As a leading manufacturer of API 602 forged gate, globe and check valves, Velan maintains one of the largest and most comprehensive inventories available from any manufacturer. Despite tens of thousands of ready-to-ship valves located around the world, requirements inevitably come up for non-standard items, and Velan has the perfect solution: fabricated valves.

Built from forged bar stock materials, Velan fabricated gate, globe and check valves offer the advantage of short lead times for non-stock items in exotic alloys.

Velan can readily provide fabricated valves in a wide variety of designs. Furthermore, our Engineering Department has the expertise to custom-design a valve to best handle your critical requirements. Backed up by advanced software tools, including finite element analysis, computational fluid dynamics and 3D solid modeling, Velan has a long history of designing and manufacturing superior quality valves that outperform the most demanding performance requirements.

FABRICATED DESIGN RANGE

- Gate
- Extended body gate
- Globe
- 45° inclined globe
- Critical services
- Y-pattern bonnetless globe
- Piston bolted cover check
- Ball type bolted cover check
- Coverless swing check

MATERIALS:

- Alloy 20
- Duplex
- F51
- F314L
- F347
- F9
- F91
- F44
- Hastelloy
- Incoloy
- Inconel
- Super duplex

Many other approved materials are also available.

CONNECTIONS:

- Butt weld
- Flanged
- NPT
- Socket weld

***NOTE:** Contact Velan Sales Dept. for more information.*

Velan reserves the right to change this information without notice. © 2014 Velan Inc. All rights reserved.

ENGINEERING DATA

SPECIFICATION OF FORGED VALVE MATERIALS

BODY AND BONNET, PACKING FLANGE, WEDGE-DISC-SEAT

TABLE 1

DESCRIPTION		CARBON STEEL		ALLOY STEEL					STAINLESS STEEL		
ASTM DESIGNATION		A105[2]	A350 Gr. LF2[2]	1¼ Cr ½ Mo	2¼ Cr-1 Mo	5% Cr	9% Cr	9% Cr	316		321
				A182 Gr. F11	A182 Gr. F22 Cl.3	A182 Gr. F5	A182 Gr. F9	A182 Gr. F91	A182 Gr. F316	A182 Gr. F316L	A182 Gr. F321
COMPOSITION %	Carbon	0.35 max.	0.35 max.	0.10-0.20	0.05-0.15 max.	0.15 max.	0.15 max.	0.08-0.12	0.08 max.[3]	0.035 max.	0.08 max.
	Manganese	0.60-1.05	0.60-1.35 max.	0.30-0.80	0.30-0.60	0.30-0.60	0.30-0.60	0.30-0.60	2.00 max.	2.00 max.	2.00 max.
	Phosphorus	0.035 max.	0.035 max.	0.040 max.	0.040 max.	0.030 max.	0.030 max.	0.020 max.	0.045 max.	0.045 max.	0.045 max.
	Sulphur	0.040 max.	0.040 max.	0.040 max.	0.040 max.	0.030 max.	0.030 max.	0.010 max.	0.030 max.	0.03 max.	0.03 max.
	Silicon	0.10-0.35 max.	0.15-0.30	0.50-1.00	0.50 max.	0.50 max.	0.50-1.00	0.20-0.50	1.00 max.	1.00 max.	1.00 max.
	Nickel	—	—	—	—	0.50 max.	—	0.4 max.	10.0-14.0	10.0-15.0	9.0-12.0
	Chromium	—	—	1.00-1.50	2.00-2.50	4.0-6.0	8.0-10.0	8.0-9.50	16.0-18.0	16.0-18.0	17.0 min.
	Molybdenum	—	—	0.44-0.65	0.87-1.13	0.44-0.65	0.90-1.10	0.85-1.05	2.0-3.0	2.0-3.0	(4)
	Special Tests	—	impact-50°F	—	—	—	—	—	—	—	—
Heat Treatment		Normalized	QT or NT[5]	NT[5]	NT[5]	NT[5]	NT[5]	NT[5]	Sol. annealed	Sol. annealed	—
Tensile psi min.		70,000	70,000	70,000	75,000	70,000	85,000	85,000	75,000	70,000	75,000
Yield psi min.		36,000	36,000	40,000	45,000	40,000	55,000	60,000	30,000	25,000	30,000
Elong. % Min.		22	22	20	20	20	20	20	30	30	30
R. Area % Min.		30	30	30	30	35	40	40	50	50	50
Hardness* HB[1]		187 max.	197 max.	143-207	156-207	143-217	179-217	248 max.	—	—	—

(1) All forgings are softer than 237 HB = 22 HRC.
(2) A105, A 350 Gr. LF2 Standard at Velan, 0.25 C max.
(3) Material code 13: 0.030 max.
(4) Titanium: min. 5 x C, max. 6 x C.
(5) QT: Quenched and tempered
NT: Normalized and tempered

TABLE 2

ASTM DESIGNATION		BAR STOCK								CAST		
		CR 13		STAINLESS STEELS			MONEL		HASTELLOY	MONEL	CoCr ALLOY Grade 6	AUSTENITIC DUCTILE
		A479 410[6]	A582 416[6]	A479 316 ST. HARD.	A479 316	A564 630	B164 MONEL	AMS 4676D K-MONEL	B574 N 10276	A494 M-25S	AMS 5387 A	A 439 D-2C
COMPOSITION %	Carbon	0.15	0.15	0.08	0.08	0.07	0.3	0.25	0.010	0.25	0.9-1.4	2.90
	Manganese	1.00	1.25	2.00	2.00	1.00	2.0	1.50	1.0	1.50	1.0	1.80-2.40
	Phosphorus	0.040	0.06	0.045	0.045	0.040	–	0.02	0.04	0.03	0.04	0.08
	Sulphur	0.030	0.15 min.	0.030	0.030	0.030	0.024	0.010	0.03	0.03	0.04	–
	Silicon	1.00	1.00	1.00	1.00	1.00	0.5	1.00	0.08	3.5-4.5	1.5	1.00-3.00
	Nickel	–	–	10.00-14.00	10.00-14.00	3.00-5.00	63.0	63.00-70.00	Balance	Balance	3.0	21.00-24.00
	Chromium	11.50-13.50	12.00-14.00	16.00-18.00	16.00-18.00	15.00-17.50	–	–	14.5-16.5	–	27.0-31.0	0.50
	Molybdenum	–	–	2.00-3.00	2.00-3.00	–	–	–	15.0-17.0	–	1.5	–
	Copper	–	–	–	–	3.00-5.00	28.0-34.0	Balance	–	27.0-33.0	–	–
	Aluminum	–	–	–	–	–	–	–	–	–	–	–
	Cobalt	–	–	–	–	–	–	–	–	–	Balance	–
	Tungsten	–	–	–	–	–	–	–	–	–	3.5-5.5	–
	Iron	–	–	–	–	–	–	–	–	3.50 Max.	3.0	–
Special Condition		Temper	Hard	Level 2	–	–	Hot worked	Hot Fin.	–	Age Hard.	–	–
Heat Treat.		Class 2	Hard Temper	Sol. annealed	Sol. annealed	H 1100	–	–	–	–	–	–
Tensile psi min.		110,000	–	95,000	75,000	140,000	80,000	140,000	100,000	–	130,000	58,000
Yield psi min.		85,000	–	75,000	30,000	115,000	40,000	100,000	41,000	–	–	28,000
Elong. % min.		15	–	25	30	14	30	20	40	–	1	20
R. Area % min.		45	–	40	40	45	–	–	–	–	–	–
Hardness HB		269 max.	293-352	–	–	302 min.	–	326 min.	–	300 min.	344 min.	121-171

(6) Cr 13 available in soft form. Less than 237 HB.
Non-Cobalt hard facing alloy available.

***Note:** CoCr alloy as used throughout this catalog refers to cobalt chrome hardfacing alloys as supplied by Kennametal Stellite™, and other approved manufacturers.*

ENGINEERING DATA

STEM PACKING

TYPE OF PACKING	TYPE OF SERVICE	SERVICE TEMPERATURE[1]
Die-formed graphite sandwiched between braided graphite, or an all braided graphite set	Steam, air, water, oils, liquified petroleum	Up to 1150°F (621°C)
PTFE V-rings	All acids, alkali, solvents, gases, except fluorine	-120 to 500°F (-84 to 260°C)
Braided PTFE	Hydrogen, peroxide, oleum, acids, alkali	-100 to 400°F (-73 to 204°C)

BODY-BONNET GASKETS

TYPE OF GASKET	TYPE OF VALVE	SERVICE TEMPERATURE[1]
Spiral wound Gr. 304 (stainless) + Graphite	Forged valves	Up to 1150°F (621°C)
Spiral wound Gr. 304 (stainless) + PTFE	Forged valves for chemical industry	Up to 500°F (260°C)
Spiral wound Monel + PTFE	Forged valves for chemical industry	Up to 500°F (260°C)

(1) Temperatures up to 1400°F (760°C) are available when specified.

TRIM MATERIALS

TRIM (CODE)	WEDGE/DISC SEATING SURFACE	SEAT SURFACE	STEM
13% Cr (TY)	CA15	CoCr alloy	410
Full CoCr alloy (TS)	CoCr alloy	CoCr alloy	410
316 (MY)	CF8M or 316	CoCr alloy	316
316 full CoCr alloy (MS)	CoCr alloy	CoCr alloy	316
Monel (XY)	Monel	CoCr alloy	Monel
Monel (XX)	Monel	Monel	Monel
Hastelloy (HC)	Hastelloy C	CoCr alloy	Hastelloy C
(SX)	CF8M	CF8M	316

HF (HYDROFLUORIC ACID) VALVES

PART	RECOMMENDED TRIMS FOR HF ACID SERVICE
Stem	Monel K
Wedge and disc	Monel or monel with PTFE, with additional side clearance to prevent buildup.
Seats	Monel
Gasket	Monel and PTFE
Packing	PTFE V-rings
Studs	A 193-B7M
Nuts	A 194-2HM

CHLORINE VALVES

PART	RECOMMENDED TRIMS FOR CHLORINE SERVICE
Stem	Monel K
Wedge and disc	Monel or Monel with PTFE
Seats	Monel
Gasket	Monel and PTFE
Packing	PTFE V-rings
Bolts	A 193-B7

Note: *Special cleaning procedure and packing available.*

SOUR SERVICE VALVES

Velan manufactures all the valves shown in this catalog in compliance with **NACE standard MR0103**[2]. Trim materials must be selected by customers from the table below based on experience with resistance to corrosion against sulphides (sour gas) found in processing crude oil.

TYPE OF TRIM (CODE)	WEDGE/DISC SEATING SURFACE	SEAT SURFACE	STEM	BONNET BOLTING
NA	13% Chrome[3]	CoCr alloy	410[3]	Gr. B7M/2HM[3]
NB	CoCr alloy or CF8M		316 or 630[4]	Gr. B7M/2HM[3] or 630[4]
NC	Monel		Monel or Monel K	Gr. B7M/2HM[3]

(2) MR0175 is also available.
(3) RC 22 maximum.
(4) 630 is "double aged".

Velan reserves the right to change this information without notice. © 2014 Velan Inc. All rights reserved.

API 602 FORGED STEEL, CLASS 800

SERVICE TEMPERATURE		A105(1) A350 GR. LF2(1) A216 GR. WCB(1)		A350 GR. LF3(2) A352 GR. LC2(2) A352 GR. LC3(2)		A182 Gr. F11 Cl.2(3) A217 Gr. WC6(4)		A182 Gr. F22 Cl.(3) A217 Gr. WC9(4)		A182 Gr. F5 A182 Gr. F5a A217 Gr. C5	
°F	°C	psig	MPa	psig	MPa	psig	MPa	psig	MPa	psig	MPa
-20 to 100	-29 to 38	1975	13.62	2000	13.79	2000	13.79	2000	13.79	2000	13.79
200	94	1800	12.41	2000	13.79	2000	13.79	2000	13.79	1985	13.69
300	149	1750	12.07	1940	13.38	1925	13.28	1940	13.38	1910	13.17
400	205	1690	11.65	1880	12.96	1850	12.76	1880	12.97	1880	12.96
500	260	1595	11.00	1775	12.24	1775	12.24	1775	12.24	1775	12.24
600	316	1460	10.07	1615	11.14	1615	11.14	1615	11.14	1615	11.14
650	344	1430	9.86	1570	10.82	1570	10.82	1570	10.82	1570	10.82
700	371	1420	9.79	–	–	1515	10.45	1515	10.45	1515	10.45
750	399	1345	9.27	–	–	1420	9.79	1420	9.79	1410	9.72
800	427	1100	7.58	–	–	1355	9.34	1355	9.34	1355	9.21
850	455	715	4.93	–	–	1300	8.96	1300	8.96	1290	8.90
900	482	460	3.17	–	–	1200	8.27	1200	8.27	985	6.79
950	510	275	1.90	–	–	850	5.86	1005	6.93	735	5.07
1000	538	140	0.96	–	–	575	3.97	695	4.79	530	3.66
1050	566	–	–	–	–	385	2.66	465	3.21	385	2.66
1100	594	–	–	–	–	255	1.76	295	2.03	265	1.83
1150	621	–	–	–	–	165	1.14	180	1.24	165	1.14
1200	649	–	–	–	–	100	0.69	110	0.76	95	0.66

SERVICE TEMPERATURE		A182 Gr. F9 A217 Gr. C12		A182 Gr. F316(6) A351 Gr. CF3M(5) A351 Gr. CF8M	
°F	°C	psig	MPa	psig	MPa
-20 to 100	-29 to 38	2000	13.79	1920	13.24
200	94	2000	13.79	1655	11.41
300	149	1940	13.38	1495	10.31
400	205	1880	12.96	1370	9.45
500	260	1775	12.24	1275	8.79
600	316	1615	11.14	1205	8.31
650	344	1570	10.82	1185	8.17
700	371	1515	10.45	1160	8.00
750	399	1420	9.79	1140	7.86
800	427	1355	9.34	1125	7.76
850	455	1300	8.96	1115	7.69
900	482	1200	8.27	1105	7.62
950	510	1005	6.93	1030	7.10
1000	538	675	4.66	935	6.45
1050	566	460	3.17	915	6.31
1100	594	300	2.07	815	5.62
1150	621	200	1.38	630	4.34
1200	649	140	0.97	495	3.41
1250	677	–	–	390	2.69
1300	705	–	–	310	2.14
1350	732	–	–	255	1.76
1400	760	–	–	200	1.38
1450	788	–	–	155	1.07
1500	816	–	–	110	0.76

NOTE: *All other small forged steel valves NPS ¼–2 (DN 8–50) have pressure-temperature ratings to B16.34.*

(1) Permissible but not recommended for prolonged use above about 800°F (425°C).

(2) Not to be used over 650°F (345°C).

(3) Permissible but not recommended for prolonged use above about 1100°F (595°C).

(4) Not to be used over 1100°F (595°C).

(5) Not to be used over 850°F (455°C).

(6) At temperatures over 1000°F (538°C) use only when the carbon content is 0.04% or higher (material code 10).

Velan reserves the right to change this information without notice. © 2014 Velan Inc. All rights reserved.

ENGINEERING DATA ASME B16.34 PRESSURE TEMPERATURE RATINGS

FORGED CARBON STEEL A105[1] — US customary

Standard Class

Working Pressure by Classes, psig

CLASS		150	300	600	900	1500	2500	4500	800	1690	2680
Test	Shell	450	1125	2225	3350	5575	9275	16675	2975	6275	9925
	Seat	325	825	1650	2450	4100	6800	12225	2175	4600	7300
°F		Standard Class							Intermediate Standard Class		
-20 to 100		285	740	1480	2220	3705	6170	11110	1975	4175	6615
200		260	680	1360	2035	3395	5655	10185	1810	3825	6065
300		230	655	1310	1965	3270	5450	9815	1745	3685	5845
400		200	635	1265	1900	3170	5280	9505	1690	3570	5660
500		170	605	1205	1810	3015	5025	9040	1610	3395	5385
600		140	570	1135	1705	2840	4730	8515	1515	3200	5070
650		125	550	1100	1650	2745	4575	8240	1465	3095	4905
700		110	530	1060	1590	2665	4425	7960	1415	3000	4745
750		95	505	1015	1520	2535	4230	7610	1350	2855	4535
800		80	410	825	1235	2055	3430	6170	1100	2315	3675
850		65	320	640	955	1595	2655	4785	850	1795	2845
900		50	230	460	690	1150	1915	3455	615	1295	2055
950		35	135	275	410	685	1145	2055	365	770	1225
1000		20	85	170	255	430	715	1285	225	485	765

Special Class

Working Pressure by Classes, psig

CLASS		150	300	600	900	1500	2500	4500	800	1690	2680
Test	Shell	450	1125	2250	3375	5625	9375	16875	3000	6350	10050
	Seat	325	825	1650	2475	4125	6875	12375	2200	4650	7375
°F		Special Class							Intermediate Special Class		
-20 to 100		290	750	1500	2250	3750	6250	11250	2000	4225	6700
200		290	750	1500	2250	3750	6250	11250	2000	4225	6700
300		285	740	1480	2220	3700	6170	11105	1975	4170	6615
400		280	735	1465	2200	3665	6105	10995	1955	4130	6545
500		280	735	1465	2200	3665	6105	10995	1955	4130	6545
600		280	735	1465	2200	3665	6105	10995	1955	4130	6545
650		275	715	1430	2145	3575	5960	10730	1905	4030	6390
700		265	690	1380	2075	3455	5760	10365	1845	3895	6175
750		245	635	1270	1905	3170	5285	9515	1695	3570	5665
800		195	515	1030	1545	2570	4285	7715	1375	2895	4595
850		155	400	795	1195	1995	3320	5980	1060	2245	3560
900		110	285	575	860	1435	2395	4305	765	1615	2565
950		65	170	345	515	855	1430	2570	460	965	1535
1000		40	105	215	320	535	895	1605	285	605	960

Limited Class

Working Pressure by Classes, psig

CLASS		150	300	600	900	1500	2500	4500	800	1690	2680
Test	Shell	450	1125	2250	3375	5625	9375	16875	3000	6350	10050
	Seat	325	825	1650	2475	4125	6875	12375	2200	4650	7375
°F		Limited Class							Intermediate Limited Class		
-20 to 100		290	750	1500	2250	3750	6250	11250	2000	4225	6700
200		290	750	1500	2250	3750	6250	11250	2000	4225	6700
300		285	740	1480	2220	3700	6170	11105	1975	4170	6615
400		280	735	1465	2200	3665	6105	10995	1955	4130	6545
500		280	735	1465	2200	3665	6105	10995	1955	4130	6545
600		280	735	1465	2200	3665	6105	10995	1955	4130	6545
650		275	715	1430	2145	3575	5960	10730	1905	4030	6390
700		265	690	1380	2075	3455	5760	10365	1845	3895	6175
750		245	635	1270	1905	3170	5285	9515	1695	3570	5665
800		195	515	1030	1545	2570	4285	7715	1375	2895	4595
850		155	400	795	1195	1995	3320	5980	1060	2245	3560
900		110	285	575	860	1435	2395	4305	765	1615	2565
950		65	170	350	520	875	1485	2745	465	990	1595
1000		40	105	220	335	570	1000	1990	295	650	1085

Selection Rules :

A) Flanged-end valves may be rated 150, 300, 600, 900, 1500, and 2500 Standard Class only, 1000°F maximum.

B) Butt weld valves may be designated as Standard Class and Special Class, or Limited Class NPS 2½ (DN 65) and smaller.

C) Socket weld valves are limited to NPS 2½ (DN 65) and smaller and may be designated as Standard Class, Special Class, or Limited Class.

D) Threaded-end or combination threaded-end valves are limited to NPS 2½ (DN 65) and smaller and may be designated as Standard Class, Special Class, or Limited Class, up to 2500 Class. The ratings terminate at 1000°F.

E) Special Class: Requires additional inspection per ASME B16.34, para. 2.1.3.

F) Do not interpolate Limited Class above 900°F. Consult the factory.

(1) Permissible but not recommended for prolonged usage above 800°F.

Velan reserves the right to change this information without notice. © 2014 Velan Inc. All rights reserved.

ENGINEERING DATA ASME B16.34 PRESSURE TEMPERATURE RATINGS

FORGED CARBON STEEL A105[1] — metric

Standard Class

Working Pressure by Classes, bar

CLASS		150	300	600	900	1500	2500	4500	800	1690	2680
Test	Shell	30	78	154	230	383	639	1149	205	432	685
	Seat	22	57	113	169	281	469	843	150	317	502
°C		Standard Class							Intermediate Standard Class		
–29 to 38		19.6	51.1	102.1	153.2	255.3	425.5	765.9	136.2	287.6	456.1
50		19.2	50.1	100.2	150.4	250.6	417.7	751.9	133.7	282.3	447.8
100		17.7	46.6	93.2	139.8	233.0	388.3	699.0	124.3	262.5	416.3
150		15.8	45.1	90.2	135.2	225.4	375.6	676.1	120.2	253.9	402.6
200		13.8	43.8	87.6	131.4	219.0	365.0	657.0	116.8	246.7	391.3
250		12.1	41.9	83.9	125.8	209.7	349.5	629.1	111.8	236.3	374.7
300		10.2	39.8	79.6	119.5	199.1	331.8	597.3	106.2	224.3	355.7
325		9.3	38.7	77.4	116.1	193.6	322.6	580.7	103.2	218.1	345.8
350		8.4	37.6	75.1	112.7	187.8	313.0	563.5	100.2	211.6	335.5
375		7.4	36.4	72.7	109.1	181.8	303.1	545.5	97.0	204.8	324.9
400		6.5	34.7	69.4	104.2	173.6	289.3	520.8	92.6	195.6	310.1
425		5.5	28.8	57.5	86.3	143.8	239.7	431.5	76.7	162.0	257.0
450		4.6	23.0	46.0	69.0	115.0	191.7	345.1	61.3	129.6	205.5
475		3.7	17.4	34.9	52.3	87.2	145.3	261.5	46.5	98.2	155.8
500		2.8	11.8	23.5	35.3	58.8	97.9	176.3	31.4	66.2	105.0
538		1.4	5.9	11.8	17.7	29.5	49.2	88.6	15.7	33.2	52.7

Special Class

Working Pressure by Classes, bar

CLASS		150	300	600	900	1500	2500	4500	800	1690	2680
Test	Shell	30	78	156	233	388	647	1164	207	437	693
	Seat	22	57	114	171	285	474	854	152	321	509
°C		Special Class							Intermediate Special Class		
–29 to 38		19.8	51.7	103.4	155.1	258.6	430.9	775.7	137.9	291.3	461.9
50		19.8	51.7	103.4	155.1	258.6	430.9	775.7	137.9	291.3	461.9
100		19.8	51.6	103.3	154.9	258.2	430.3	774.5	137.7	290.9	461.3
150		19.6	51.0	102.1	153.1	255.2	425.3	765.5	136.1	287.5	455.9
200		19.4	50.6	101.1	151.7	252.9	421.4	758.6	134.8	284.9	451.7
250		19.4	50.5	101.1	151.6	252.6	421.1	757.9	134.8	284.6	451.4
300		19.4	50.5	101.1	151.6	252.6	421.1	757.9	134.8	284.6	451.4
325		19.2	50.1	100.2	150.3	250.6	417.6	751.7	133.6	282.3	447.7
350		18.7	48.9	97.8	146.7	244.6	407.6	733.7	130.4	275.6	436.9
375		18.1	47.1	94.2	141.3	235.5	392.5	706.5	125.6	265.3	420.8
400		16.6	43.4	86.8	130.2	217.0	361.7	651.0	115.7	244.5	387.7
425		13.8	36.0	71.9	107.9	179.8	299.6	539.3	95.9	202.6	321.2
450		11.0	28.8	57.5	86.3	143.8	239.6	431.4	76.7	162.0	256.9
475		8.4	21.8	43.6	65.4	109.0	181.6	326.9	58.1	122.8	194.7
500		5.6	14.7	29.4	44.1	73.5	122.4	220.4	39.2	82.8	131.2
538		2.8	7.4	14.8	22.2	36.9	61.6	110.8	19.7	41.6	66.0

Limited Class

Working Pressure by Classes, bar

CLASS		150	300	600	900	1500	2500	4500	800	1690	2680
Test	Shell	30	78	156	233	388	647	1164	207	437	693
	Seat	22	57	114	171	285	474	854	152	321	509
°C		Limited Class							Intermediate Limited Class		
–29 to 38		19.8	51.7	103.4	155.1	258.6	430.9	775.7	137.9	291.3	461.9
50		19.8	51.7	103.4	155.1	258.6	430.9	775.7	137.9	291.3	461.9
100		19.8	51.6	103.3	154.9	258.2	430.3	774.5	137.7	290.9	461.3
150		19.6	51.0	102.1	153.1	255.2	425.3	765.5	136.1	287.5	455.9
200		19.4	50.6	101.1	151.7	252.9	421.4	758.6	134.8	284.9	451.7
250		19.4	50.5	101.1	151.6	252.6	421.1	757.9	134.8	284.6	451.4
300		19.4	50.5	101.1	151.6	252.6	421.1	757.9	134.8	284.6	451.4
325		19.2	50.1	100.2	150.3	250.6	417.6	751.7	133.6	282.3	447.7
350		18.7	48.9	97.8	146.7	244.6	407.6	733.7	130.4	275.6	436.9
375		18.1	47.1	94.2	141.3	235.5	392.5	706.5	125.6	265.3	420.8
400		16.6	43.4	86.8	130.2	217.0	361.7	651.0	115.7	244.5	387.7
425		13.8	36.0	71.9	107.9	179.8	299.6	539.3	95.9	202.6	321.2
450		11.0	28.8	57.5	86.3	143.8	239.6	431.4	76.7	162.0	256.9
475		8.4	21.8	43.6	65.4	109.0	181.6	326.9	58.1	122.8	194.7
500		5.6	14.7	29.6	44.5	74.6	125.4	230.3	39.5	84.2	134.6
538		2.8	7.5	15.2	23.1	39.4	69.0	137.3	20.4	44.8	74.6

Selection Rules :

A) Flanged-end valves may be rated 150, 300, 600, 900, 1500, and 2500 Standard Class only, 538°C maximum.

B) Butt weld valves may be designated as Standard Class and Special Class, or Limited Class NPS 2½ (DN 65) and smaller.

C) Socket weld valves are limited to NPS 2½ (DN 65) and smaller and may be designated as Standard Class, Special Class, or Limited Class.

D) Threaded-end or combination threaded-end valves are limited to NPS 2½ (DN 65) and smaller and may be designated as Standard Class, Special Class, or Limited Class, up to 2500 Class. The ratings terminate at 538°C.

E) Special Class: Requires additional inspection per ASME B16.34, para. 2.1.3.

F) Do not interpolate Limited Class above 475°C. Consult the factory.

(1) Permissible but not recommended for prolonged usage above 425°C.

Velan reserves the right to change this information without notice. © 2014 Velan Inc. All rights reserved.

ENGINEERING DATA ASME B16.34 PRESSURE TEMPERATURE RATINGS

FORGED CHROME-MOLY STEEL A182 Gr. F22 Cl.3[(1)] — US customary

Standard Class

Working Pressure by Classes, psig

CLASS		150	300	600	900	1500	2500	4500	800	1690	2680
Test	Shell	450	1125	2250	3375	5625	9375	16875	3000	6350	10050
	Seat	325	825	1650	2475	4125	6875	12375	2200	4650	7375
°F		Standard Class							Intermediate Standard Class		
-20 to 100		290	750	1500	2250	3750	6250	11250	2000	4225	6700
200		260	750	1500	2250	3750	6250	11250	2000	4225	6700
300		230	730	1455	2185	3640	6070	10925	1940	4100	6505
400		200	705	1410	2115	3530	5880	10585	1880	3975	6305
500		170	665	1330	1995	3325	5540	9965	1775	3745	5940
600		140	605	1210	1815	3025	5040	9070	1615	3410	5405
650		125	590	1175	1765	2940	4905	8825	1570	3315	5260
700		110	570	1135	1705	2840	4730	8515	1515	3200	5070
750		95	530	1065	1595	2660	4430	7970	1420	2995	4750
800		80	510	1015	1525	2540	4230	7610	1355	2860	4535
850		65	485	975	1460	2435	4060	7305	1300	2745	4350
900		50	450	900	1350	2245	3745	6740	1200	2530	4015
950		35	385	755	1160	1930	3220	5795	1025	2175	3450
1000		20	265	535	800	1335	2230	4010	710	1505	2390
1050		20	175	350	525	875	1455	2625	465	985	1560
1100		20	110	220	330	550	915	1645	295	620	980
1150		20	70	135	205	345	570	1030	180	390	610
1200		15	40	80	125	205	345	615	110	230	370

Special Class

Working Pressure by Classes, psig

CLASS		150	300	600	900	1500	2500	4500	800	1690	2680
Test	Shell	450	1125	2250	3375	5625	9375	16875	3000	6350	10050
	Seat	325	825	1650	2475	4125	6875	12375	2200	4650	7375
°F		Special Class							Intermediate Special Class		
-20 to 100		290	750	1500	2250	3750	6250	11250	2000	4225	6700
200		290	750	1500	2250	3750	6250	11250	2000	4225	6700
300		285	740	1480	2220	3695	6160	11090	1975	4165	6605
400		280	730	1455	2185	3640	6065	10915	1940	4100	6500
500		280	725	1450	2175	3620	6035	10865	1935	4080	6470
600		275	720	1440	2165	3605	6010	10815	1925	4060	6445
650		275	715	1430	2145	3580	5965	10735	1905	4035	6395
700		270	705	1415	2120	3535	5895	10605	1885	3985	6320
750		270	705	1415	2120	3535	5895	10605	1885	3985	6320
800		270	705	1415	2120	3535	5895	10605	1885	3985	6320
850		260	680	1355	2030	3385	5645	10160	1805	3815	6050
900		230	600	1200	1800	3000	5000	9000	1600	3380	5360
950		180	470	945	1415	2360	3930	7070	1260	2660	4215
1000		130	335	670	1005	1670	2785	5015	895	1880	2985
1050		85	220	435	655	1095	1820	3280	580	1235	1950
1100		55	135	275	410	685	1145	2055	365	770	1225
1150		35	85	170	255	430	715	1285	225	485	765
1200		20	50	105	155	255	430	770	140	285	460

Limited Class

Working Pressure by Classes, psig

CLASS		150	300	600	900	1500	2500	4500	800	1690	2680
Test	Shell	450	1125	2250	3375	5625	9375	16875	3000	6350	10050
	Seat	325	825	1650	2475	4125	6875	12375	2200	4650	7375
°F		Limited Class							Intermediate Limited Class		
-20 to 100		290	750	1500	2250	3750	6250	11250	2000	4225	6700
200		290	750	1500	2250	3750	6250	11250	2000	4225	6700
300		285	740	1480	2220	3695	6160	11090	1975	4165	6605
400		280	730	1455	2185	3640	6065	10915	1940	4100	6500
500		280	725	1450	2175	3620	6035	10865	1935	4080	6470
600		275	720	1440	2165	3605	6010	10815	1925	4060	6445
650		275	715	1430	2145	3580	5965	10735	1905	4035	6395
700		270	705	1415	2120	3535	5895	10605	1885	3985	6320
750		270	705	1415	2120	3535	5895	10605	1885	3985	6320
800		270	705	1415	2120	3535	5895	10605	1885	3985	6320
850		260	680	1355	2030	3385	5645	10160	1805	3815	6050
900		230	600	1200	1800	3000	5000	9000	1600	3380	5360
950		180	470	955	1435	2410	4075	7555	1275	2725	4385
1000		130	340	690	1045	1785	3120	6215	925	2025	3370
1050		85	225	445	680	1170	2040	4065	600	1330	2205
1100		55	135	280	425	730	1280	2545	380	830	1385
1150		35	85	175	265	460	800	1590	235	525	865
1200		20	50	110	160	275	480	955	145	305	520

Selection Rules :

A) Flanged-end valves may be rated 150, 300, 600, 900, 1500, and 2500 Standard Class only, 1000°F maximum.

B) Butt weld valves may be designated as Standard Class and Special Class, or Limited Class NPS 2½ (DN 65) and smaller.

C) Socket weld valves are limited to NPS 2½ (DN 65) and smaller and may be designated as Standard Class, Special Class, or Limited Class.

D) Threaded-end or combination threaded-end valves are limited to NPS 2½ (DN 65) and smaller and may be designated as Standard Class, Special Class, or Limited Class, up to 2500 Class. The ratings terminate at 1000°F.

E) Special Class: Requires additional inspection per ASME B16.34, para. 2.1.3.

F) Do not interpolate Limited Class above 900°F. Consult the factory.

(1) Permissible but not recommended for prolonged usage above 1100°F.

Velan reserves the right to change this information without notice. © 2014 Velan Inc. All rights reserved.

FORGED CHROME-MOLY STEEL A182 Gr. F22 Cl.3[(1)] — metric

Standard Class

Working Pressure by Classes, bar

CLASS		150	300	600	900	1500	2500	4500	800	1690	2680
Test	Shell	30	78	156	233	388	647	1164	207	437	693
	Seat	22	57	114	171	285	474	854	152	321	509
°C		Standard Class							Intermediate Standard Class		
–29 to 38		19.8	51.7	103.4	155.1	258.6	430.9	775.7	137.9	291.3	462.0
50		19.5	51.7	103.4	155.1	258.6	430.9	775.7	137.9	291.3	462.0
100		17.7	51.5	103.0	154.6	257.6	429.4	773.0	137.4	290.3	460.4
150		15.8	50.3	100.3	150.6	250.8	418.2	752.8	133.8	282.7	448.3
200		13.8	48.6	97.2	145.8	243.4	405.4	729.8	129.7	274.1	434.6
250		12.1	46.3	92.7	139.0	231.8	386.2	694.8	123.5	260.9	413.8
300		10.2	42.9	85.7	128.6	214.4	357.1	642.6	114.2	241.3	382.7
325		9.3	41.4	82.6	124.0	206.6	344.3	619.6	110.2	232.7	369.0
350		8.4	40.3	80.4	120.7	201.1	335.3	603.3	107.3	226.6	359.3
375		7.4	38.9	77.6	116.5	194.1	323.2	581.8	103.4	218.5	346.5
400		6.5	36.5	73.3	109.8	183.1	304.9	548.5	97.5	206.0	326.7
425		5.5	35.2	70.0	105.1	175.1	291.6	524.7	93.3	197.1	312.5
450		4.6	33.7	67.7	101.4	169.0	281.8	507.0	90.1	190.4	301.9
475		3.7	31.7	63.4	95.1	158.2	263.9	474.8	84.4	178.3	282.8
500		2.8	28.2	56.5	84.7	140.9	235.0	423.0	75.2	158.9	251.9
538		1.4	18.4	36.9	55.3	92.2	153.7	276.6	49.2	103.9	164.7
550		1.4	15.6	31.3	46.9	78.2	130.3	234.5	41.7	88.1	139.7
575		1.4	10.5	21.1	31.6	52.6	87.7	157.9	28.1	59.3	94.0
600		1.4	6.9	13.8	20.7	34.4	57.4	103.3	18.4	38.8	61.5
625		1.4	4.5	8.9	13.4	22.3	37.2	66.9	11.9	25.1	39.8
650		1.4	2.8	5.7	8.5	14.2	23.6	42.6	7.6	16.0	25.4

Special Class

Working Pressure by Classes, bar

CLASS		150	300	600	900	1500	2500	4500	800	1690	2680
Test	Shell	30	78	156	233	388	647	1164	207	437	693
	Seat	22	57	114	171	285	474	854	152	321	509
°C		Special Class							Intermediate Special Class		
–29 to 38		19.8	51.7	103.4	155.1	258.6	430.9	775.7	137.9	291.3	462.0
50		19.8	51.7	103.4	155.1	258.6	430.9	775.7	137.9	291.3	462.0
100		19.8	51.6	103.2	154.9	258.1	430.2	774.3	137.7	290.8	461.1
150		19.5	51.0	101.9	152.9	254.8	424.6	764.3	135.9	287.0	455.2
200		19.3	50.2	100.4	150.7	251.1	418.5	753.4	133.9	282.9	448.7
250		19.2	50.0	100.0	149.9	249.9	416.5	749.7	133.3	281.6	446.5
300		19.1	49.8	99.6	149.3	248.9	414.8	746.7	132.7	280.4	444.7
325		19.0	49.6	99.2	148.8	248.0	413.3	743.9	132.2	279.4	443.0
350		18.9	49.2	98.4	147.6	246.0	410.0	738.1	131.2	277.2	439.6
375		18.7	48.8	97.5	146.3	243.8	406.3	731.3	130.0	274.6	435.5
400		18.7	48.8	97.5	146.3	243.8	406.3	731.3	130.0	274.6	435.5
425		18.7	48.8	97.5	146.3	243.8	406.3	731.3	130.0	274.6	435.5
450		18.1	47.3	94.4	141.4	235.8	393.1	707.6	125.8	265.7	421.4
475		16.4	42.8	85.5	128.2	213.7	356.3	641.3	114.0	240.8	381.9
500		13.7	35.6	71.5	107.1	178.6	297.5	535.4	95.2	201.1	318.9
538		8.8	23.0	46.1	69.1	115.2	192.1	345.7	61.5	129.8	205.9
550		7.5	19.5	39.1	58.6	97.7	162.8	293.1	52.1	110.1	174.6
575		5.0	13.2	26.3	39.5	65.8	109.7	197.4	35.1	74.1	117.6
600		3.3	8.6	17.2	25.8	43.0	71.7	129.1	23.0	48.5	76.9
625		2.1	5.6	11.2	16.7	27.9	46.5	83.7	14.9	31.4	49.8
650		1.4	3.5	7.1	10.6	17.7	29.5	53.2	9.5	20.0	31.7

Limited Class

Working Pressure by Classes, bar

CLASS		150	300	600	900	1500	2500	4500	800	1690	2680
Test	Shell	30	78	156	233	388	647	1164	207	437	693
	Seat	22	57	114	171	285	474	854	152	321	509
°C		Limited Class							Intermediate Limited Class		
–29 to 38		19.8	51.7	103.4	155.1	258.6	430.9	775.7	137.9	291.3	462.0
50		19.8	51.7	103.4	155.1	258.6	430.9	775.7	137.9	291.3	462.0
100		19.8	51.6	103.2	154.9	258.1	430.2	774.3	137.7	290.8	461.1
150		19.5	51.0	101.9	152.9	254.8	424.6	764.3	135.9	287.0	455.2
200		19.3	50.2	100.4	150.7	251.1	418.5	753.4	133.9	282.9	448.7
250		19.2	50.0	100.0	149.9	249.9	416.5	749.7	133.3	281.6	446.5
300		19.1	49.8	99.6	149.3	248.9	414.8	746.7	132.7	280.4	444.7
325		19.0	49.6	99.2	148.8	248.0	413.3	743.9	132.2	279.4	443.0
350		18.9	49.2	98.4	147.6	246.0	410.0	738.1	131.2	277.2	439.6
375		18.7	48.8	97.5	146.3	243.8	406.3	731.3	130.0	274.6	435.5
400		18.7	48.8	97.5	146.3	243.8	406.3	731.3	130.0	274.6	435.5
425		18.7	48.8	97.5	146.3	243.8	406.3	731.3	130.0	274.6	435.5
450		18.1	47.3	94.4	141.4	235.8	393.1	707.6	125.8	265.7	421.4
475		16.4	42.8	85.5	128.2	213.7	356.3	641.3	114.0	240.8	381.9
500		13.7	35.7	71.9	108.0	181.2	304.8	559.4	95.9	204.4	327.3
538		8.8	23.3	47.3	71.9	123.1	215.2	428.3	63.7	139.9	232.6
550		7.5	19.8	40.1	61.0	104.4	182.3	363.1	53.9	118.7	197.3
575		5.0	13.4	27.0	41.1	70.3	122.9	244.6	36.3	79.9	132.9
600		3.3	8.7	17.7	26.8	46.0	80.3	159.9	23.8	52.3	86.9
625		2.1	5.7	11.5	17.4	29.8	52.1	103.7	15.4	33.9	56.3
650		1.4	3.5	7.3	11.0	18.9	33.0	65.9	9.8	21.6	35.8

Selection Rules :

A) Flanged-end valves may be rated 150, 300, 600, 900, 1500, and 2500 Standard Class only, 538°C maximum.

B) Butt weld valves may be designated as Standard Class and Special Class, or Limited Class NPS 2½ (DN 65) and smaller.

C) Socket weld valves are limited to NPS 2½ (DN 65) and smaller and may be designated as Standard Class, Special Class, or Limited Class.

D) Threaded-end or combination threaded-end valves are limited to NPS 2½ (DN 65) and smaller and may be designated as Standard Class, Special Class, or Limited Class, up to 2500 Class. The ratings terminate at 538°C.

E) Special Class: Requires additional inspection per ASME B16.34, para. 2.1.3.

F) Do not interpolate Limited Class above 475°C. Consult the factory.

(1) Permissible but not recommended for prolonged usage above 595°C.

Velan reserves the right to change this information without notice. © 2014 Velan Inc. All rights reserved.

ENGINEERING DATA ASME B16.34 PRESSURE TEMPERATURE RATINGS

FORGED STAINLESS STEEL A182 Gr. F316[(1)] — US customary

Standard Class

Working Pressure by Classes, psig

CLASS		150	300	600	900	1500	2500	4500	800	1690	2680
Test	Shell	425	1100	2175	3250	5400	9000	16200	2900	6100	9650
	Seat	325	800	1600	2400	3975	6600	11900	2125	4475	7075
°F		Standard Class							Intermediate Standard Class		
-20 to 100		275	720	1440	2160	3600	6000	10800	1920	4055	6430
200		235	620	1240	1860	3095	5160	9290	1655	3485	5530
300		215	560	1120	1680	2795	4660	8390	1495	3150	4995
400		195	515	1025	1540	2570	4280	7705	1370	2895	4590
500		170	480	955	1435	2390	3980	7165	1275	2690	4265
600		140	450	900	1355	2255	3760	6770	1205	2540	4030
650		125	440	885	1325	2210	3680	6625	1180	2490	3945
700		110	435	870	1305	2170	3620	6515	1160	2445	3880
750		95	425	855	1280	2135	3560	6410	1140	2405	3815
800		80	420	845	1265	2110	3520	6335	1125	2380	3775
850		65	420	835	1255	2090	3480	6265	1115	2355	3730
900		50	415	830	1245	2075	3460	6230	1105	2340	3710
950		35	385	775	1160	1930	3220	5795	1030	2175	3450
1000		20	365	725	1090	1820	3030	5450	970	2050	3250
1050		20	360	720	1080	1800	3000	5400	960	2030	3215
1100		20	305	610	915	1525	2545	4575	815	1720	2730
1150		20	235	475	710	1185	1970	3550	630	1335	2110
1200		20	185	370	555	925	1545	2775	495	1045	1655
1250		20	145	295	440	735	1230	2210	390	830	1320
1300		20	115	235	350	585	970	1750	310	660	1040
1350		20	95	190	290	480	800	1440	255	540	860
1400		20	75	150	225	380	630	1130	200	430	675
1450		20	60	115	175	290	485	875	155	325	520
1500		15	40	85	125	205	345	620	110	230	370

Special Class

Working Pressure by Classes, psig

CLASS		150	300	600	900	1500	2500	4500	800	1690	2680
Test	Shell	450	1125	2250	3375	5625	9375	16875	3000	6350	10050
	Seat	325	825	1650	2475	4125	6875	12375	2200	4650	7375
°F		Special Class							Intermediate Special Class		
-20 to 100		290	750	1500	2250	3750	6250	11250	2000	4225	6700
200		265	690	1380	2075	3455	5760	10365	1845	3895	6175
300		240	625	1250	1870	3120	5200	9360	1665	3515	5575
400		220	575	1145	1720	2865	4775	8600	1530	3230	5120
500		205	535	1065	1600	2665	4440	7995	1420	3005	4760
600		195	505	1005	1510	2520	4195	7555	1340	2840	4495
650		190	495	985	1480	2465	4105	7395	1315	2775	4400
700		185	485	970	1455	2425	4040	7270	1295	2730	4330
750		185	475	955	1430	2385	3975	7150	1270	2685	4260
800		180	470	945	1415	2355	3930	7070	1260	2655	4215
850		180	465	930	1400	2330	3885	6990	1245	2625	4165
900		180	465	925	1390	2315	3860	6950	1235	2610	4140
950		175	460	915	1375	2290	3815	6870	1220	2580	4090
1000		160	420	840	1260	2105	3505	6310	1120	2370	3755
1050		160	420	840	1260	2105	3505	6310	1120	2370	3755
1100		145	380	765	1145	1905	3180	5720	1020	2145	3410
1150		115	295	590	885	1480	2465	4435	785	1665	2640
1200		90	230	465	695	1155	1930	3470	620	1300	2070
1250		70	185	370	555	920	1535	2765	495	1035	1645
1300		55	145	290	435	730	1215	2185	385	820	1300
1350		45	120	240	360	600	1000	1800	320	675	1070
1400		35	95	190	285	470	785	1415	255	530	840
1450		30	75	145	220	365	605	1095	195	410	650
1500		20	50	105	155	260	430	770	140	295	460

Limited Class

Working Pressure by Classes, psig

CLASS		150	300	600	900	1500	2500	4500	800	1690	2680
Test	Shell	450	1125	2250	3375	5625	9375	16875	3000	6350	10050
	Seat	325	825	1650	2475	4125	6875	12375	2200	4650	7375
°F		Limited Class							Intermediate Limited Class		
-20 to 100		290	750	1500	2250	3750	6250	11250	2000	4225	6700
200		265	690	1380	2075	3455	5760	10365	1845	3895	6175
300		240	625	1250	1870	3120	5200	9360	1665	3515	5575
400		220	575	1145	1720	2865	4775	8600	1530	3230	5120
500		205	535	1065	1600	2665	4440	7995	1420	3005	4760
600		195	505	1005	1510	2520	4195	7555	1340	2840	4495
650		190	495	985	1480	2465	4105	7395	1315	2775	4400
700		185	485	970	1455	2425	4040	7270	1295	2730	4330
750		185	475	955	1430	2385	3975	7150	1270	2685	4260
800		180	470	945	1415	2355	3930	7070	1260	2655	4215
850		180	465	930	1400	2330	3885	6990	1245	2625	4165
900		180	465	925	1390	2315	3860	6950	1235	2610	4140
950		175	460	915	1375	2290	3815	6870	1220	2580	4090
1000		160	420	840	1260	2105	3505	6310	1120	2370	3755
1050		160	420	840	1260	2105	3505	6310	1120	2370	3755
1100		145	380	770	1160	1945	3300	6115	1030	2200	3545
1150		115	300	605	920	1580	2760	5495	815	1795	2985
1200		90	235	475	725	1235	2160	4300	640	1400	2340
1250		70	185	380	575	985	1720	3425	515	1115	1860
1300		55	145	300	450	780	1360	2705	400	885	1470
1350		45	120	245	375	640	1120	2230	330	730	1210
1400		35	95	195	295	500	880	1755	265	570	950
1450		30	75	150	230	390	680	1355	200	440	735
1500		20	50	110	160	280	480	955	145	320	520

Selection Rules :

A) Flanged-end valves may be rated 150, 300, 600, 900, 1500, and 2500 Standard Class only, 1000°F maximum.

B) Butt weld valves may be designated as Standard Class and Special Class, or Limited Class NPS 2½ (DN 65) and smaller.

C) Socket weld valves are limited to NPS 2½ (DN 65) and smaller and may be designated as Standard Class, Special Class, or Limited Class.

D) Threaded-end or combination threaded-end valves are limited to NPS 2½ (DN 65) and smaller and may be designated as Standard Class, Special Class, or Limited Class, up to 2500 Class. The ratings terminate at 1000°F.

E) Special Class: Requires additional inspection per ASME B16.34, para. 2.1.3.

F) Do not interpolate Limited Class above 1000°F. Consult the factory.

(1) At temperatures over 1000°F use only when the carbon content is 0.04% or higher (material code 10).

 Velan reserves the right to change this information without notice. © 2014 Velan Inc. All rights reserved.

FORGED STAINLESS STEEL A182 Gr. F316[(1)] — metric

Standard Class

Working Pressure by Classes, bar

CLASS		150	300	600	900	1500	2500	4500	800	1690	2680
Test	Shell	29	75	149	224	373	621	1117	199	420	666
	Seat	21	55	110	164	274	456	820	146	308	488
°C		Standard Class							Intermediate Standard Class		
–29 to 38		19.0	49.6	99.3	148.9	248.2	413.7	744.6	132.4	279.6	443.5
50		18.4	48.1	96.2	144.3	240.6	400.9	721.7	128.3	271.0	429.8
100		16.2	42.2	84.4	126.6	211.0	351.6	632.9	112.5	237.7	376.9
150		14.8	38.5	77.0	115.5	192.5	320.8	577.4	102.6	216.8	343.9
200		13.7	35.7	71.3	107.0	178.3	297.2	534.9	95.1	200.9	318.6
250		12.1	33.4	66.8	100.1	166.9	278.1	500.6	89.0	188.0	298.1
300		10.2	31.6	63.2	94.9	158.1	263.5	474.3	84.3	178.1	282.5
325		9.3	30.9	61.8	92.7	154.4	257.4	463.3	82.4	174.0	275.9
350		8.4	30.3	60.7	91.0	151.6	252.7	454.9	80.9	170.8	270.9
375		7.4	29.9	59.8	89.6	149.4	249.0	448.2	79.7	168.3	266.9
400		6.5	29.4	58.9	88.3	147.2	245.3	441.6	78.5	165.8	263.0
425		5.5	29.1	58.3	87.4	145.7	242.9	437.1	77.7	164.2	260.3
450		4.6	28.8	57.7	86.5	144.2	240.4	432.7	76.9	162.5	257.7
475		3.7	28.7	57.3	86.0	143.4	238.9	430.1	76.5	161.5	256.1
500		2.8	28.2	56.5	84.7	140.9	235.0	423.0	75.2	158.9	251.9
538		1.4	25.2	50.0	75.2	125.5	208.9	375.8	66.8	141.1	223.8
550		1.4	25.0	49.8	74.8	124.9	208.0	374.2	66.5	140.5	222.9
575		1.4	24.0	47.9	71.8	119.7	199.5	359.1	63.8	134.9	213.9
600		1.4	19.9	39.8	59.7	99.5	165.9	298.6	53.1	112.1	177.8
625		1.4	15.8	31.6	47.4	79.1	131.8	237.2	42.2	89.1	141.3
650		1.4	12.7	25.3	38.0	63.3	105.5	189.9	33.8	71.3	113.1
675		1.4	10.3	20.6	31.0	51.6	86.0	154.8	27.5	58.1	92.2
700		1.4	8.4	16.8	25.1	41.9	69.8	125.7	22.3	47.2	74.9
725		1.4	7.0	14.0	21.0	34.9	58.2	104.8	18.6	39.4	62.4
750		1.4	5.9	11.7	17.6	29.3	48.9	87.9	15.6	33.0	52.3
775		1.4	4.6	9.0	13.7	22.8	38.0	68.4	12.2	25.7	40.7
800		1.2	3.5	7.0	10.5	17.4	29.2	52.6	9.4	19.8	31.3
816		1.0	2.8	5.9	8.6	14.1	23.8	42.7	7.6	16.0	25.4

Special Class

Working Pressure by Classes, bar

CLASS		150	300	600	900	1500	2500	4500	800	1690	2680
Test	Shell	30	78	156	233	388	647	1164	207	437	693
	Seat	22	57	114	171	285	474	854	152	321	509
°C		Special Class							Intermediate Special Class		
–29 to 38		19.8	51.7	103.4	155.1	258.6	430.9	775.7	137.9	291.3	462.0
50		19.5	50.8	101.6	152.5	254.1	423.5	762.3	135.5	286.3	454.0
100		18.1	47.1	94.2	141.3	235.5	392.4	706.4	125.6	265.3	420.7
150		16.5	43.0	85.9	128.9	214.8	358.0	644.4	114.6	242.0	383.8
200		15.3	39.8	79.6	119.4	199.0	331.7	597.0	106.1	224.2	355.5
250		14.3	37.3	74.5	111.8	186.3	310.4	558.8	99.3	209.9	332.8
300		13.5	35.3	70.6	105.9	176.4	294.1	529.3	94.1	198.8	315.2
325		13.2	34.5	68.9	103.4	172.3	287.2	517.0	91.9	194.2	307.9
350		13.0	33.8	67.7	101.5	169.2	282.1	507.7	90.3	190.7	302.4
375		12.8	33.3	66.7	100.0	166.7	277.9	500.2	88.9	187.9	297.9
400		12.6	32.9	65.7	98.6	164.3	273.8	492.9	87.6	185.1	293.5
425		12.5	32.5	65.1	97.6	162.6	271.1	487.9	86.7	183.2	290.6
450		12.3	32.2	64.4	96.6	161.0	268.3	482.9	85.8	181.4	287.6
475		12.3	32.0	64.0	96.0	160.0	266.6	480.0	85.3	180.3	285.9
500		12.2	31.7	63.4	95.1	158.6	264.3	475.7	84.6	178.7	283.3
538		11.0	29.0	57.9	86.9	145.1	241.7	435.1	77.4	163.4	259.1
550		11.0	29.0	57.9	86.9	145.1	241.7	435.1	77.4	163.4	259.1
575		10.9	28.6	57.1	85.7	143.0	238.3	428.8	76.2	161.0	255.4
600		9.5	24.9	49.8	74.6	124.4	207.3	373.2	66.3	140.2	222.3
625		7.6	19.8	39.5	59.3	98.8	164.7	296.5	52.7	111.4	176.6
650		6.1	15.8	31.7	47.5	79.1	131.9	237.4	42.2	89.2	141.4
675		4.9	12.9	25.8	38.7	64.5	107.5	193.5	34.4	72.7	115.2
700		4.4	11.4	22.8	34.3	57.1	95.2	171.3	30.5	64.3	102.0
725		3.7	9.5	19.1	28.6	47.7	79.5	143.0	25.4	53.7	85.2
750		2.8	7.4	14.8	22.1	36.7	61.2	110.3	19.6	41.4	65.7
775		2.2	5.8	11.4	17.2	28.5	47.6	85.6	15.2	32.1	51.0
800		1.8	4.4	8.8	13.2	22.0	36.6	65.6	11.7	24.6	39.1
816		1.4	3.4	7.2	10.7	17.9	29.6	53.1	9.4	19.9	31.6

Limited Class

Working Pressure by Classes, bar

CLASS		150	300	600	900	1500	2500	4500	800	1690	2680
Test	Shell	30	78	156	233	388	647	1164	207	437	693
	Seat	22	57	114	171	285	474	854	152	321	509
°C		Limited Class							Intermediate Limited Class		
–29 to 38		19.8	51.7	103.4	155.1	258.6	430.9	775.7	137.9	291.3	462.0
50		19.5	50.8	101.6	152.5	254.1	423.5	762.3	135.5	286.3	454.0
100		18.1	47.1	94.2	141.3	235.5	392.4	706.4	125.6	265.3	420.7
150		16.5	43.0	85.9	128.9	214.8	358.0	644.4	114.6	242.0	383.8
200		15.3	39.8	79.6	119.4	199.0	331.7	597.0	106.1	224.2	355.5
250		14.3	37.3	74.5	111.8	186.3	310.4	558.8	99.3	209.9	332.8
300		13.5	35.3	70.6	105.9	176.4	294.1	529.3	94.1	198.8	315.2
325		13.2	34.5	68.9	103.4	172.3	287.2	517.0	91.9	194.2	307.9
350		13.0	33.8	67.7	101.5	169.2	282.1	507.7	90.3	190.7	302.4
375		12.8	33.3	66.7	100.0	166.7	277.9	500.2	88.9	187.9	297.9
400		12.6	32.9	65.7	98.6	164.3	273.8	492.9	87.6	185.1	293.5
425		12.5	32.5	65.1	97.6	162.6	271.1	487.9	86.7	183.2	290.6
450		12.3	32.2	64.4	96.6	161.0	268.3	482.9	85.8	181.4	287.6
475		12.3	32.0	64.0	96.0	160.0	266.6	480.0	85.3	180.3	285.9
500		12.2	31.7	63.4	95.1	158.6	264.3	475.7	84.6	178.7	283.3
538		11.0	29.0	57.9	86.9	145.1	241.7	435.1	77.4	163.4	259.1
550		11.0	29.0	57.9	86.9	145.1	241.7	435.1	77.4	163.4	259.1
575		10.9	28.6	57.3	86.1	144.0	241.2	438.2	76.5	162.3	258.7
600		9.5	25.1	50.4	76.0	128.2	218.2	410.1	67.4	145.1	234.9
625		7.6	20.1	40.5	61.7	105.6	184.5	367.3	54.6	120.1	199.5
650		6.1	16.0	32.5	49.4	84.5	147.7	294.1	43.7	96.2	159.7
675		4.9	13.1	26.5	40.3	68.9	120.4	239.7	35.6	78.4	130.1
700		4.4	11.5	23.4	35.7	61.0	106.6	212.2	31.6	69.3	115.2
725		3.7	9.6	19.6	29.7	51.0	89.0	177.2	26.3	57.9	96.3
750		2.8	7.5	15.2	23.0	39.2	68.5	136.7	20.3	44.6	74.2
775		2.2	5.9	11.7	17.9	30.5	53.3	106.1	15.7	34.6	57.6
800		1.8	4.5	9.0	13.7	23.5	41.0	81.3	12.1	26.5	44.2
816		1.4	3.4	7.4	11.1	19.1	33.2	65.8	9.7	21.5	35.7

Selection Rules :

A) Flanged-end valves may be rated 150, 300, 600, 900, 1500, and 2500 Standard Class only, 538°C maximum.

B) Butt weld valves may be designated as Standard Class and Special Class, or Limited Class NPS 2½ (DN 65) and smaller.

C) Socket weld valves are limited to NPS 2½ (DN 65) and smaller and may be designated as Standard Class, Special Class, or Limited Class.

D) Threaded-end or combination threaded-end valves are limited to NPS 2½ (DN 65) and smaller and may be designated as Standard Class, Special Class, or Limited Class, up to 2500 Class. The ratings terminate at 538°C.

E) Special Class: Requires additional inspection per ASME B16.34, para. 2.1.3.

F) Do not interpolate Limited Class above 550°C. Consult the factory.

(1) At temperatures over 538°C use only when the carbon content is 0.04% or higher (material code 10).

Velan reserves the right to change this information without notice. © 2014 Velan Inc. All rights reserved.

ENGINEERING DATA ASME B16.34 PRESSURE TEMPERATURE RATINGS

FORGED CHROME-MOLY STEEL A182 Gr. F91 — US customary

Standard Class

Working Pressure by Classes, psig

CLASS		150	300	600	900	1500	2500	4500	800	1690	2680
Test	Shell	450	1125	2250	3375	5625	9375	16875	3000	6350	10050
	Seat	325	825	1650	2475	4125	6875	12375	2200	4650	7375
°F		Standard Class							Intermediate Standard Class		
-20 to 100		290	750	1500	2250	3750	6250	11250	2000	4225	6700
200		260	750	1500	2250	3750	6250	11250	2000	4225	6700
300		230	730	1455	2185	3640	6070	10925	1940	4100	6505
400		200	705	1410	2115	3530	5880	10585	1880	3975	6305
500		170	665	1330	1995	3325	5540	9965	1775	3745	5940
600		140	605	1210	1815	3025	5040	9070	1615	3410	5405
650		125	590	1175	1765	2940	4905	8825	1570	3315	5260
700		110	570	1135	1705	2840	4730	8515	1515	3200	5070
750		95	530	1065	1595	2660	4430	7970	1420	2995	4750
800		80	510	1015	1525	2540	4230	7610	1355	2860	4535
850		65	485	975	1460	2435	4060	7305	1300	2745	4350
900		50	450	900	1350	2245	3745	6740	1200	2530	4015
950		35	385	775	1160	1930	3220	5795	1030	2175	3450
1000		20	365	725	1090	1820	3030	5450	970	2050	3250
1050		20	360	720	1080	1800	3000	5400	960	2030	3215
1100		20	300	605	905	1510	2515	4525	805	1700	2695
1150		20	225	445	670	1115	1855	3345	595	1255	1990
1200		20	145	290	430	720	1200	2160	385	810	1285

Special Class

Working Pressure by Classes, psig

CLASS		150	300	600	900	1500	2500	4500	800	1690	2680
Test	Shell	450	1125	2250	3375	5625	9375	16875	3000	6350	10050
	Seat	325	825	1650	2475	4125	6875	12375	2200	4650	7375
°F		Special Class							Intermediate Special Class		
-20 to 100		290	750	1500	2250	3750	6250	11250	2000	4225	6700
200		290	750	1500	2250	3750	6250	11250	2000	4225	6700
300		290	750	1500	2250	3750	6250	11250	2000	4225	6700
400		290	750	1500	2250	3750	6250	11250	2000	4225	6700
500		290	750	1500	2250	3750	6250	11250	2000	4225	6700
600		290	750	1500	2250	3750	6250	11250	2000	4225	6700
650		290	750	1500	2250	3750	6250	11250	2000	4225	6700
700		280	735	1465	2200	3665	6110	10995	1955	4130	6550
750		280	730	1460	2185	3645	6070	10930	1945	4105	6505
800		275	720	1440	2160	3600	6000	10800	1920	4055	6430
850		260	680	1355	2030	3385	5645	10160	1805	3815	6050
900		230	600	1200	1800	3000	5000	9000	1600	3380	5360
950		180	470	945	1415	2360	3930	7070	1260	2660	4215
1000		160	420	840	1260	2105	3505	6310	1120	2370	3755
1050		160	420	840	1260	2105	3505	6310	1120	2370	3755
1100		145	375	755	1130	1885	3145	5655	1005	2125	3370
1150		105	280	555	835	1395	2320	4180	740	1570	2485
1200		70	180	360	540	900	1500	2700	480	1015	1610

Limited Class

Working Pressure by Classes, psig

CLASS		150	300	600	900	1500	2500	4500	800	1690	2680
Test	Shell	450	1125	2250	3375	5625	9375	16875	3000	6350	10050
	Seat	325	825	1650	2475	4125	6875	12375	2200	4650	7375
°F		Limited Class							Intermediate Limited Class		
-20 to 100		290	750	1500	2250	3750	6250	11250	2000	4225	6700
200		290	750	1500	2250	3750	6250	11250	2000	4225	6700
300		290	750	1500	2250	3750	6250	11250	2000	4225	6700
400		290	750	1500	2250	3750	6250	11250	2000	4225	6700
500		290	750	1500	2250	3750	6250	11250	2000	4225	6700
600		290	750	1500	2250	3750	6250	11250	2000	4225	6700
650		290	750	1500	2250	3750	6250	11250	2000	4225	6700
700		280	735	1465	2200	3665	6110	10995	1955	4130	6550
750		280	730	1460	2185	3645	6070	10930	1945	4105	6505
800		275	720	1440	2160	3600	6000	10800	1920	4055	6430
850		260	680	1355	2030	3385	5645	10160	1805	3815	6050
900		230	600	1200	1800	3000	5000	9000	1600	3380	5360
950		180	470	955	1435	2410	4075	7555	1275	2725	4385
1000		160	425	860	1310	2250	3925	7820	1160	2555	4240
1050		160	425	860	1310	2250	3925	7820	1160	2555	4240
1100		145	380	775	1175	2015	3520	7005	1040	2290	3805
1150		105	285	570	870	1490	2600	5180	765	1695	2805
1200		70	180	370	560	960	1680	3345	495	1095	1820

Selection Rules :

A) Flanged-end valves may be rated 150, 300, 600, 900, 1500, and 2500 Standard Class only, 1000°F maximum.

B) Butt weld valves may be designated as Standard Class and Special Class, or Limited Class NPS 2½ (DN 65) and smaller.

C) Socket weld valves are limited to NPS 2½ (DN 65) and smaller and may be designated as Standard Class, Special Class, or Limited Class.

D) Threaded-end or combination threaded-end valves are limited to NPS 2½ (DN 65) and smaller and may be designated as Standard Class, Special Class, or Limited Class, up to 2500 Class. The ratings terminate at 1000°F.

E) Special Class: Requires additional inspection per ASME B16.34, para. 2.1.3.

F) Do not interpolate Limited Class above 900°F. Consult the factory.

Velan reserves the right to change this information without notice. © 2014 Velan Inc. All rights reserved.

ENGINEERING DATA ASME B16.34 PRESSURE TEMPERATURE RATINGS

FORGED CHROME-MOLY STEEL A182 Gr. F91 — metric

Standard Class

Working Pressure by Classes, bar

CLASS		150	300	600	900	1500	2500	4500	800	1690	2680
Test	Shell	30	78	156	233	388	647	1164	207	437	693
	Seat	22	57	114	171	285	474	854	152	321	509
°C		Standard Class							Intermediate Standard Class		
–29 to 38		20.0	51.7	103.4	155.1	258.6	430.9	775.7	137.9	291.3	461.9
50		19.5	51.7	103.4	155.1	258.6	430.9	775.7	137.9	291.3	461.9
100		17.7	51.5	103.0	154.6	257.6	429.4	773.0	137.4	290.2	460.3
150		15.8	50.3	100.3	150.6	250.8	418.2	752.8	133.8	282.6	448.3
200		13.8	48.6	97.2	145.8	243.4	405.4	729.8	129.6	274.2	434.6
250		12.1	46.3	92.7	139.0	231.8	386.2	694.8	123.6	261.1	414.0
300		10.2	42.9	85.7	128.6	214.4	357.1	642.6	114.3	241.5	382.8
325		9.3	41.4	82.6	124.0	206.6	344.3	619.6	110.2	232.8	369.1
350		8.4	40.3	80.4	120.7	201.1	335.3	603.3	107.3	226.6	359.4
375		7.4	38.9	77.6	116.5	194.1	323.2	581.8	103.5	218.6	346.5
400		6.5	36.5	73.3	109.8	183.1	304.9	548.5	97.6	206.2	326.8
425		5.5	35.2	70.0	105.1	175.1	291.6	524.7	93.4	197.2	312.6
450		4.6	33.7	67.7	101.4	169.0	281.8	507.0	90.2	190.4	302.1
475		3.7	31.7	63.4	95.1	158.2	263.9	474.8	84.5	178.3	282.9
500		2.8	28.2	56.5	84.7	140.9	235.0	423.0	75.3	158.8	251.9
538		1.4	25.2	50.0	75.2	125.5	208.9	375.8	66.8	141.3	223.9
550		1.40	25.0	49.8	74.8	124.9	208.0	374.2	66.5	140.7	223.0
575		1.40	24.0	47.9	71.8	119.7	199.5	359.1	63.8	134.9	213.9
600		1.40	19.5	39.0	58.5	97.5	162.5	292.5	52.0	109.8	174.2
625		1.40	14.6	29.2	43.8	73.0	121.7	219.1	38.9	82.3	130.5
650		1.40	9.9	19.9	29.8	49.6	82.7	148.9	26.5	55.9	88.7

Special Class

Working Pressure by Classes, bar

CLASS		150	300	600	900	1500	2500	4500	800	1690	2680
Test	Shell	30	78	156	233	388	647	1164	207	437	693
	Seat	22	57	114	171	285	474	854	152	321	509
°C		Special Class							Intermediate Special Class		
–29 to 38		20.0	51.7	103.4	155.1	258.6	430.9	775.7	137.9	291.3	461.9
50		20.0	51.7	103.4	155.1	258.6	430.9	775.7	137.9	291.3	461.9
100		20.0	51.7	103.4	155.1	258.6	430.9	775.7	137.9	291.3	461.9
150		20.0	51.7	103.4	155.1	258.6	430.9	775.7	137.9	291.3	461.9
200		20.0	51.7	103.4	155.1	258.6	430.9	775.7	137.9	291.3	461.9
250		20.0	51.7	103.4	155.1	258.6	430.9	775.7	137.9	291.3	461.9
300		20.0	51.7	103.4	155.1	258.6	430.9	775.7	137.9	291.3	461.9
325		20.0	51.7	103.4	155.1	258.6	430.9	775.7	137.9	291.3	461.9
350		19.8	51.5	102.8	154.3	257.1	428.6	771.4	137.1	289.7	459.5
375		19.3	50.6	101.0	151.5	252.5	420.9	757.4	134.7	284.5	451.2
400		19.3	50.3	100.6	150.6	251.2	418.3	753.2	133.9	282.9	448.4
425		19.0	49.6	99.3	148.9	248.2	413.7	744.6	132.4	279.6	443.5
450		18.1	47.3	94.4	141.4	235.8	393.1	707.6	125.7	265.7	421.4
475		16.4	42.8	85.5	128.2	213.7	356.3	641.3	114.0	240.8	381.9
500		13.7	35.6	71.5	107.1	178.6	297.5	535.4	95.2	201.2	318.9
538		11.0	29.0	57.9	86.9	145.1	241.7	435.1	77.2	163.5	259.1
550		11.0	29.0	57.9	86.9	145.1	241.7	435.1	77.2	163.5	259.1
575		10.9	28.6	57.1	85.7	143.0	238.3	428.8	76.2	161.1	255.4
600		9.3	24.4	48.7	73.1	121.9	203.1	365.6	65.0	137.3	217.7
625		7.0	18.3	36.5	54.8	91.3	152.1	273.8	48.7	102.9	163.1
650		4.8	12.4	24.8	37.2	62.1	103.4	186.2	33.1	69.9	110.9

Limited Class

Working Pressure by Classes, bar

CLASS		150	300	600	900	1500	2500	4500	800	1690	2680
Test	Shell	30	78	156	233	388	647	1164	207	437	693
	Seat	22	57	114	171	285	474	854	152	321	509
°C		Limited Class							Intermediate Limited Class		
–29 to 38		20.0	51.7	103.4	155.1	258.6	430.9	775.7	137.9	291.3	461.9
50		20.0	51.7	103.4	155.1	258.6	430.9	775.7	137.9	291.3	461.9
100		20.0	51.7	103.4	155.1	258.6	430.9	775.7	137.9	291.3	461.9
150		20.0	51.7	103.4	155.1	258.6	430.9	775.7	137.9	291.3	461.9
200		20.0	51.7	103.4	155.1	258.6	430.9	775.7	137.9	291.3	461.9
250		20.0	51.7	103.4	155.1	258.6	430.9	775.7	137.9	291.3	461.9
300		20.0	51.7	103.4	155.1	258.6	430.9	775.7	137.9	291.3	461.9
325		20.0	51.7	103.4	155.1	258.6	430.9	775.7	137.9	291.3	461.9
350		19.8	51.5	102.8	154.3	257.1	428.6	771.4	137.1	289.7	459.5
375		19.3	50.6	101.0	151.5	252.5	420.9	757.4	134.7	284.5	451.2
400		19.3	50.3	100.6	150.6	251.2	418.3	753.2	133.9	282.9	448.4
425		19.0	49.6	99.3	148.9	248.2	413.7	744.6	132.4	279.6	443.5
450		18.1	47.3	94.4	141.4	235.8	393.1	707.6	125.7	265.7	421.4
475		16.4	42.8	85.5	128.2	213.7	356.3	641.3	114.0	240.8	381.9
500		13.7	35.7	71.9	108.0	181.2	304.8	559.4	95.9	204.5	327.3
538		11.1	29.4	59.4	90.4	155.1	270.7	539.1	79.9	176.3	292.7
550		11.1	29.4	59.4	90.4	155.1	270.7	539.1	79.9	176.3	292.7
575		11.0	29.0	58.6	89.1	152.8	266.9	531.3	78.9	173.7	288.5
600		9.3	24.7	50.0	76.0	130.3	227.5	453.0	67.3	148.0	245.9
625		7.0	18.5	37.5	57.0	97.6	170.4	339.2	50.4	110.9	184.3
650		4.8	12.6	25.5	38.7	66.4	115.8	230.7	34.3	75.4	125.3

Selection Rules :

A) Flanged-end valves may be rated 150, 300, 600, 900, 1500, and 2500 Standard Class only, 538°C maximum.

B) Butt weld valves may be designated as Standard Class and Special Class, or Limited Class NPS 2½ (DN 65) and smaller.

C) Socket weld valves are limited to NPS 2½ (DN 65) and smaller and may be designated as Standard Class, Special Class, or Limited Class.

D) Threaded-end or combination threaded-end valves are limited to NPS 2½ (DN 65) and smaller and may be designated as Standard Class, Special Class, or Limited Class, up to 2500 Class. The ratings terminate at 538°C.

E) Special Class: Requires additional inspection per ASME B16.34, para. 2.1.3.

F) Do not interpolate Limited Class above 475°C. Consult the factory.

Velan reserves the right to change this information without notice. © 2014 Velan Inc. All rights reserved.

ENGINEERING DATA

Cv FLOW COEFFICIENT TABLES

SIZE		Bolted bonnet, welded bonnet gate and bellows seal gate Standard port				Bolted bonnet and welded bonnet gate Full Port		Y-pattern bonnetless globe		Bolted bonnet globe 45° incl.	Welded bonnet globe 45° incl.
NPS	DN	150-800	1500-1690(1)	2500(2)	4500(2)	800	1500-1690(1)	1690-2680	4500	800-1690	1690-2680
¼	8	2.6	2.6	–	–	2.6	2.6	1.3	1.0	–	–
3/8	10	2.6	5	–	–	5	5	2.4	1.3	–	–
½	15	7	14(3)	14	–	14	14	2.9	1.5	3.4	8
¾	20	14	14	14	25	30	30	5.0	5.0	5.8	9
1	25	30	30	30	25	58	58	9.8	6.0	11.3	14
¼	32	100	100	58	48	100	100	20	9.8	26.5	28
1½	40	100	100	58	48	160	160	20	20	29	29
2(5)	50	–	–	–	–	–	–	34	–	–	–
2	50	160	160	160	92	280	250	60	26	54	54
2½	65	–	–	–	–	–	–	60	47	54	–
3	80	–	–	–	–	–	–	60	47	54	–
4	100	–	–	–	–	–	–	60	47	–	–

SIZE		Bolted bonnet, welded bonnet globe vertical and angle(4)		Bolted bonnet and welded bonnet bellows seal globe	Y-pattern bellows seal globe	Bolted bonnet angle globe (boiler blowoff)	Bolted bonnet 45° incl. globe (boiler blowoff)	Swing check	Piston check (vertical)		Piston check (inclined)	
NPS	DN	150-800	1500-1690(1)	150-800	1500-2500	600-1500	600-1500	150-800	150-800	900-1500	1690-2680	4500
¼	8	1.5	1.5	–	–	–	–	–	1.8	2	1.0	–
3/8	10	2.2	2.5	–	–	–	–	–	1.8	2	1.8	1.5
½	15	2.2	3	2.5	5	3	–	9	2	3	2.1	2.1
¾	20	4	4	3.5	6	6	–	10	3	4	4.3	4.3
1	25	6	6	4.5	7	16	18	22	6	6	8.4	4.3
¼	32	14	14	8.3	15	29	50	32	14	14	17	–
1½	40	14	14	8.3	17	29	50	55	14	14	24	18
2(5)	50	–	–	–	–	–	–	–	–	–	26	–
2	50	33	33	17	19	54	62	82	25	25	45	36
2½	65	–	–	–	–	–	–	–	–	–	45	36
3	80	–	–	–	–	–	–	–	–	–	45	36
4	100	–	–	–	–	–	–	–	–	–	45	36

(1) Bolted bonnet only

(2) Welded bonnet only

(3) 14 Cv for bolted bonnet & 7 Cv for welded bonnet

(4) Bolted bonnet Class 1690 only (horseshoe)

(5) With seat 1.25″ and end-to-end 7.25″

NOTE: *Metric Equivalent of Cv is Kv: Kv = Cv x 0.85*

 Velan reserves the right to change this information without notice. © 2014 Velan Inc. All rights reserved.

HOW TO ORDER

Type of connection	Size of connection		Pressure rating	Valve type		Body/bonnet style			Body material		Trim Material	
A	B		C	D		E			F		G	
F	0	8	— 2	0	7	4	B	—	1	3	M	S

Example: is a NPS 2 (DN 50) 600 Class stainless steel bolted bonnet globe valve with MS trim.

A TYPE OF CONNECTION

B	Butt weld	S	Thread NPT
C	Combination (socket weld/threaded)	U	Undrilled flanges
F	Flanged B16.5 (B16.47 series A)	W	Socket weld
R	Flanged ring joint	X	Butt weld (intermediate class)

B SIZE OF CONNECTION

Customers have the choice of specifying valve size as part of the valve figure number (**B**) using the numbers below, or indicating valve size separately. Sizes shown in NPS (DN)

EXAMPLES:
F**08**-2054B-13MS (valve size is part of figure number)
2F-2054B-13MS (valve size is shown separately)

01	¼ (8)	04	¾ (20)	07	1½ (40)	10	3 (80)
02	⅜ (10)	05	1 (25)	08	2 (50)	11	3½ (90)
03	½ (15)	06	1¼ (32)	09	2½ (65)	12	4 (100)

C PRESSURE RATING

0	150	4	2500	8	1690
1	300	5	4500	9	2680
2	600 or 800 API 602	6	400		
3	1500	7	900		

D VALVE TYPE

01	Flow control	11	Swing check
02	Ball check	14	Parallel slide
03	Piston check	15	Instrument
05	Conventional port gate	17	IREB gate
06	Full port gate	18	Extended body gate
07	Stop globe	21	Boiler blowoff
08	Stop check	22	Pressure relief
09	Needle	23	Double disc gate
10	Continuous blowdown	34	Tilting disc check valve

E BODY/BONNET STYLE

4	Vertical	B	Bolted bonnet (forged)
5	Angle	D	Diaphragm
6	Inclined y-pattern	E	Extended bonnet (cryogenic)
7	Inclined y-pattern bonnetless 45°	R	Forged bolted bonnet bellows seal
8	Elbow down	S	Y-pattern bellows seal (non-rotating stem)
		T	All welded bellows seal
		W	Welded bonnet
		Y	Bonnetless (rotating stem)
		Z	Bonnetless (non-rotating stem)

***Note:** Velan valves for **NACE** service (as indicated by figure number and/or description) comply with the metallurgical requirements of the current NACE MR0103 and MR0175 / ISO 15156. Material selection is dependent on the actual environment and it is therefore the equipment End User's responsibility to ensure that the materials are suitable for the intended service. Please contact Velan for any questions regarding the application of our products for NACE service.*

F BODY MATERIAL

02	A105, WCB	15	S/S F347, CF8C	25	LCB
04	CHR. MOLY F5, C5	16	S/S F304H	26	LF2/LCB
05	CHR, MOLY F11, WC6	18	S/S F321	27	LF3/LC3
06	CHR, MOLY F22, WC9	19	Monel M35	31	LCC
09	CHR, MOLY F9, C12	20	Inconel 625(1)	32	S/S F51, 4A, CD3MN
10	S/S F316H(2)	21	Hastelloy C(1)	34	F91/C12A
11	S/S F304, CF8	22	Titanium Gr. 5	35	S/S F44 (254SMO) CK3MCuN
12	S/S F304L, CF3	23	Alloy 20 (CN7M)	36	S/S F321H
13	S/S F316, CF8M(3)	24	LF1	37	Incoloy 825(1)
14	S/S F316L, CF3M				

(1) Must specify grade
(2) Material code "10" F316H/F316, has a minimum carbon content of 0.04 and is to be used if temperatures are over 1000°F (538°C).
(3) Material code "13" Forged F316, is not suitable for temperatures above 1000°F (538°C) as it is dual certified (F316/F316L).

G TRIM (standard trims)

Code		Wedge/disc surface(1)	Seat surface(1)	Stem	Bellows(2) *(if applicable)*	API Number
MS	Standard	CoCr alloy(3)	CoCr alloy(3)	316/316L	321	
MY	Standard	CF8M or 316	CoCr alloy(3)	316/316L	321	12
TS	Standard	CoCr alloy(3)	CoCr alloy(3)	13 CR (410)	321	5
TY	Standard	13 CR (410 or CA15)	CoCr alloy(3)	13 CR (410)	321	8
NA	Nace Service(5)	13 CR (410 or CA15) HRC 22 max.	CoCr alloy(3)	13 CR 410 HRC 22 max.		8(5)
NB	Nace Service(5)	CF8M or 316	CoCr alloy(3)	316/316L	321	12(5)
NC	Nace Service(5)	Monel	CoCr alloy(3)	Monel	Hastelloy C	11(5)
NE	Nace Service(5)	CoCr alloy(3)	CoCr alloy(3)	13 CR 410 HRC 22 max.	Inconel 625	5(5)
NF	Nace Service(5)	CoCr alloy(3)	CoCr alloy(3)	Same as body		
AS		CoCr alloy(3)	CoCr alloy(3)	321	321	
CS		Alloy 20	CoCr alloy(3)	Alloy 20		
HC		Hastelloy C	CoCr alloy(3)	Hastelloy C	Hastelloy C	
HM		HF-acid trim	HF-acid trim	HF-acid trim		
MC		CF8M or 316 with CTFE insert(4)	CoCr alloy(3)	316		
PA		NOREM	NOREM	630	Inconel 625	
US		CoCr alloy(3)	CoCr alloy(3)	S/S 616HT		
UY		13 CR (410 or CA15)	CoCr alloy(3)	S/S 616HT		
XX		Monel	Monel	Monel		9
XY		Monel	CoCr alloy(3)	Monel		11

(1) Base material is either the same as the body or solid trim at manufacturer's option.
(2) Bellows material shown as standard, Inconel can be used in lieu of 321 and Hastelloy C in lieu of Inconel, where design and/or pressure class applicable.
(3) CoCr alloy (Grade 6 or 21) based on material or application at manufacturer's option.
(4) Inserts may be in seat or wedge at manufacturer's option.
(5) NACE service valves are supplied with all materials conforming to NACE MR0175. (Including bolting with max. hardness of RC22).

***Note:** CoCr alloy as used throughout this catalog refers to cobalt chrome hardfacing alloys as supplied by Kennametal Stellite™, and other approved manufacturers.*

Consult Velan's website at **www.velan.com**, for diagnostic troubleshooting and available trim materials.

The most comprehensive line of industrial forged and cast steel gate, globe, check, ball, butterfly, and knife gate valves and steam traps.

ASME pressure classes 150–4500 in carbon, alloy, and stainless steel

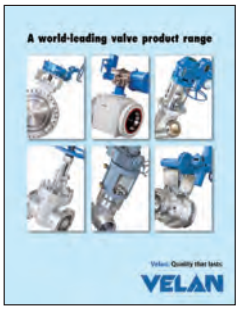

BRO-FLB



SAS-FLB



ABV-FLB

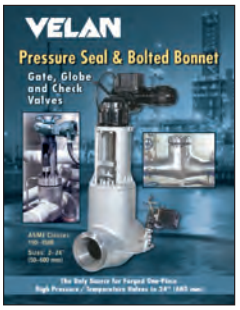

VEL-PS

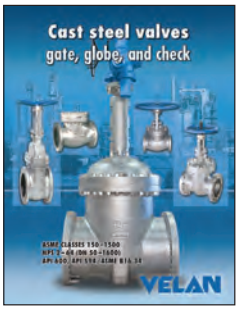

CAT-CSV



CAT-CSSV

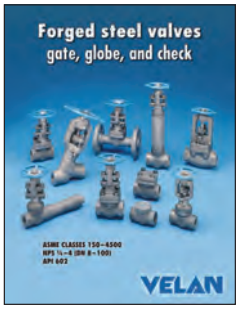

CAT-SFV



CAT-BG



CAT-KGV



CAT-DPCV

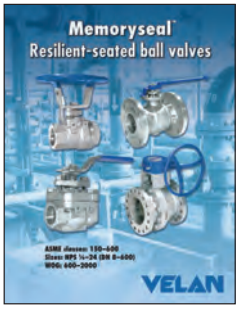

CAT-BV

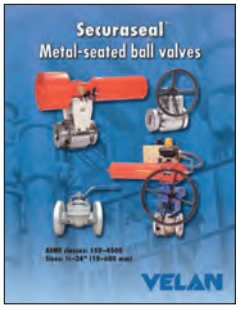

VEL-MS



CAT-PBV

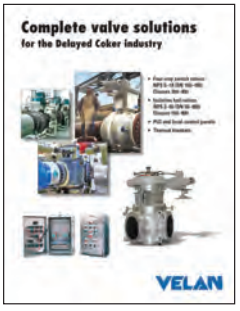

BRO-CBV



CAT-GPBV

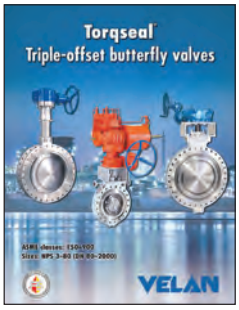

CAT-BF



SAS-CCV

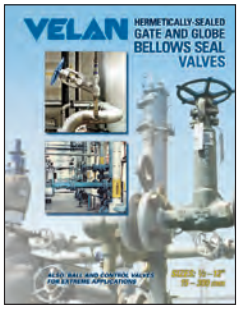

VEL-BS



VEL-CRYO



CAT-ST

Headquartered in Montreal, Canada, Velan has several international subsidiaries. For general inquiries:

Velan head office
7007 Côte de Liesse, Montreal, QC H4T 1G2 Canada
Tel: +1 514 748 7743 **Fax:** +1 514 748 8635

Check our website for more specific contact information.

www.velan.com

CAT-SFV-06-14

Printed in Canada

© 2014 Velan Inc., Montreal, QC, Canada. All rights reserved. The contents hereof are confidential and proprietary to Velan. Any unauthorized reproduction or disclosure, in whole or in part, is strictly prohibited. The material in this catalog is for general information only and shall not be used for specific performance data and material selection without first consulting Velan. Velan reserves the right to change this information without notice. Velan does not accept any liability or damages arising from the use of information in this catalog. Velan Valves, Velan, Memoryseal, Torqseal, Velflex, Adaxie, and RAMA are trademarks or registered trademarks of Velan Inc. and/or another Velan company. Stellite® is a registered trademark of Kennametal Stellite™, a wholly owned subsidiary of Kennametal Inc. All other trademarks and registered trademarks are owned by their respective companies.

VELAN

VELAN

FORGED STEEL VALVES

INSTALLATION & OPERATION MANUAL

Bolted Bonnet Gate, Globe, Piston, Ball & Swing Check Valves
Welded Bonnet Gate, Globe and Check Valves
¼–2" (8–50 mm)

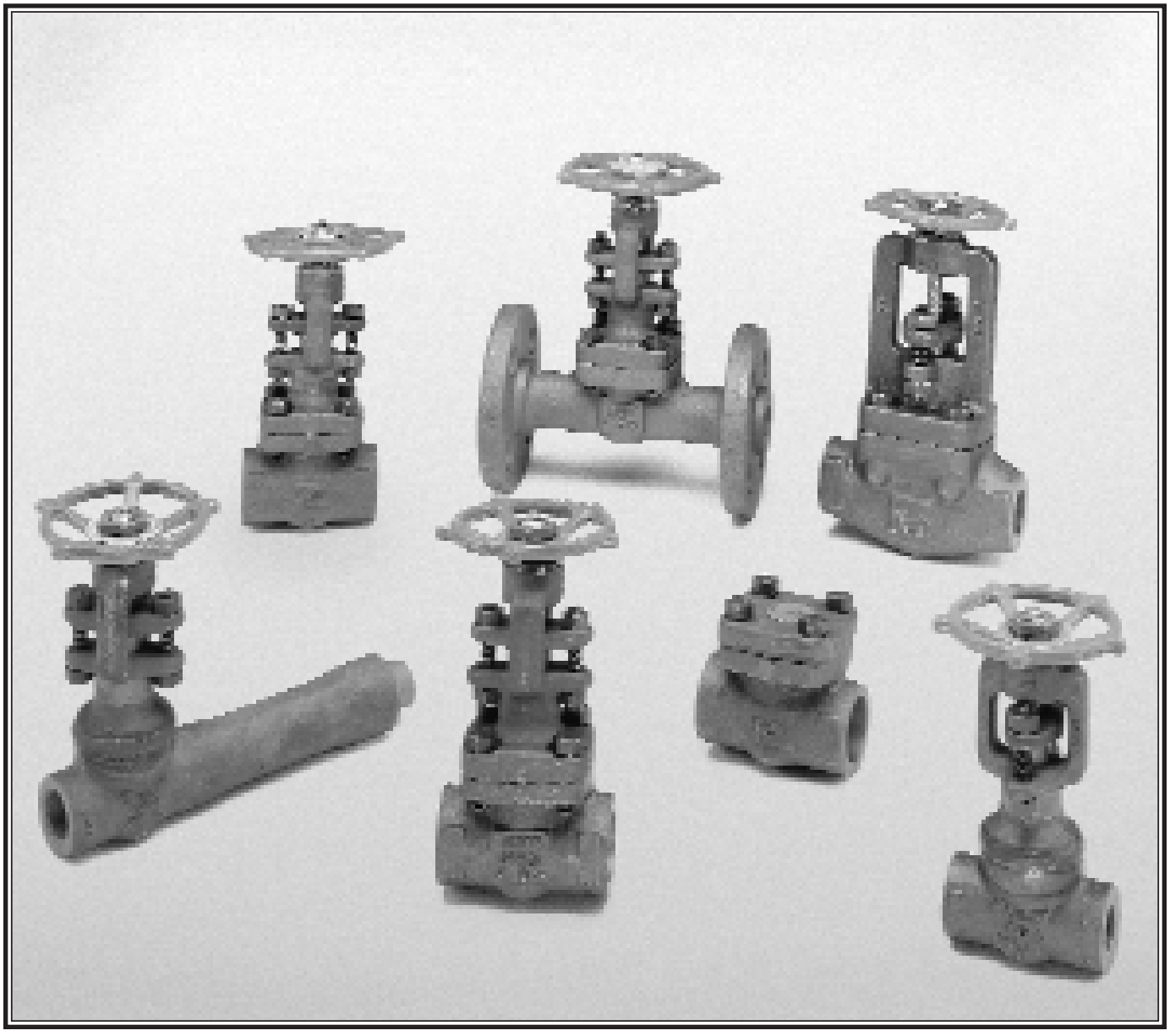

Maintenance Manuals

VEL–SFVM–2004

TABLE OF CONTENTS

GENERAL INFORMATION — PAGE

I INTRODUCTION 5

1.1 General Introduction 5
1.2 Essential Features of Velan Valves 6

II RECEIVING & PREPARATION FOR INSTALLATION 7

2.1 Receiving Inspection 7
2.2 Storage 7
2.3 Special Instructions for Gate Valves 7
2.4 Special Instructions for Globe Valves 7
2.5 Special Instructions for Piston, Ball and Swing Check Valves 8

III WARNINGS 10

IV GENERAL MAINTENANCE 11

4.1 Operation 11
4.1.1 General 11
4.1.2 Smoothness of Operation 11
4.1.3 Seat Tightness and Closing Torques 11
4.2 Recommended Lubrication 11

V INFORMATION PERTINENT TO GATE, GLOBE AND CHECK VALVES 12

5.1 Packing Chamber Leakage 12
5.1.1 General 12
5.1.2 Packing Ring Removal on line – Use of Backseat 12
5.1.3 Repacking with Uncompressed Packings 12
5.1.4 Repacking with Graphite Packing Rings for Valves Without Leak-Off Connection 13
5.1.5 Packing torques 14
5.2 Body-Bonnet Joint Tightness 14
5.2.1 General 14
5.2.2 Body-Bonnet Bolt Torquing 14
5.2.3 Torque Procedure 15
5.2.4 Application of Torque 15
5.2.5 Replacement of Spiral Wound Gasket 15

GATE VALVES

VI GATE VALVES 16

6.1 Seat Leakage 16
6.1.1 General 16
6.1.2 Wedge Repairs: Gate Valves 16
6.1.3 Seat Repairs: Gate Valves 16
6.1.4 Fitting of Repaired Parts: Gate Valves 17
6.2 Disassembly of Gate Valves 18
6.2.1 General 18
6.2.2 Total Disassembly 18
6.3 Reassembly of Gate Valves 18
6.3.1 General 18

GLOBE VALVES PAGE

VII GLOBE VALVES 19

7.1 Seat Leakage 19
7.1.1 General 19
7.1.2 Seat Repairs: Globe Valves 19
7.1.3 Fitting of Repaired Parts: Globe Valves 19
7.2 Disassembly of Globe Valves 20
7.2.1 General 20
7.2.2 Total Disassembly 20
7.3 Reassembly of Globe Valves 20
7.3.1 General 20

CHECK VALVES

VIII CHECK VALVES 21

8.1 Seat Leakage 21
8.1.1 General 21
8.1.2 Seat Repairs: Piston and Ball Check Valves 21
8.1.3 Seat Repairs: Swing Check Valves 21
8.1.4 Fitting of Repaired Parts: Piston Check Valves 21
8.1.5 Supplementary Instructions for Soft-Seated Piston Check Valves 21
8.1.6 Fitting of Repaired Parts: Swing Check Valves 22
8.2 Disassembly of Check Valves 22
8.2.1 General 22
8.2.2 Disassembly of Small Bolted Cover Piston and Ball Check Valves 22
8.2.3 Disassembly of Swing Check Valves 24
8.3 Reassembly of Check Valves 24
8.3.1 General 24
8.3.2 Reassembly of Piston and Ball Check Valves 24
8.3.3 Reassembly of Swing Check Valves 24

WELDED BONNET VALVES

IX WELDED BONNET VALVES 25

9.1 Welded Bonnet Gate, Globe and Check Valves 25
9.1.1 Disassembly 25
9.1.2 Reassembly 25

TERMS AND CONDITIONS OF SALE 27

LIST OF FIGURES AND TABLES

FIGURES	NUMBER	PAGE
Bolt tightening sequence	*5.2B*	15
Bolted bonnet gate valve	*2.3*	7
Bolted bonnet globe valve	*2.4*	8
Bolted cover piston check valve	*2.5A*	9
Bolted cover piston check valve exploded view	*8.2A*	23
Bolted cover swing check valve	*2.5B*	9
Bolted cover ball check valve exploded view	*8.2B*	23
Braided graphite packing ring	*5.1B*	12
Check valve: angle of incline and roll angle	*2.5C*	9
CTFE or PTFE disc-swaged seat	*8.1B*	22
Gasket recess	*5.2A*	14
Gate valve wedge	*6.1B*	17
Graphite ribbon packing	*5.1A*	12
Insert braided end ring, followed by intermediate ring	*5.1E*	13
Lantern ring configuration	*5.1D*	12
Packings installed	*5.1G*	13
Piston disc with replaceable CTFE or PTFE soft seat	*8.1C*	22
Piston disc with replaceable EPDM soft seat	*8.1A*	22
Repacking with split packing adaptor	*5.1F*	13
Six packings shown	*5.1C*	12
Stem disc contact area	*7.1A*	19
Welded bonnet gate valve	*9.1C*	26
Welded bonnet globe valve	*9.1B*	26
Welded cover piston check	*9.1A*	25
Wedge seating face	*6.1A*	17

TABLES	NUMBER	PAGE
Locking nut torques	*8.1*	22
Packing flange nut torques for gate or globe valves (graphite ribbon or PTFE packing)	*4.1.2*	11
Recommended lubrication	*4.2*	11
Torque values (100%) for body-bonnet bolting	*5.2*	15

1.1 GENERAL INTRODUCTION



VELAN

This manual has been prepared by Velan engineers, designers and maintenance personnel to assist you in obtaining many years of satisfactory service from your forged steel valves. It will also assist you in restoring your valve to the best working condition with a minimum of time and expense.

Velan valves are designed and manufactured based on many years of research and product development and are constantly being improved. Before beginning any major work, we recommend that you read this booklet carefully at least once to understand the valve's physical condition.

Please note that if you do not understand the reason for the service problem, we suggest that you get in touch with your local Velan representative or call the Customer Service Manager for technical assistance.

Before beginning any major work, we recommend that you carefully check the nameplate on the valve and record the figure number to identify the type and size of valve. See the "Essential Features of Velan Valves" form on the following page for an explanation of Velan "Figure Numbers".

I INTRODUCTION

1.2 ESSENTIAL FEATURES OF VELAN VALVES

Gate, Globe and Check Valves

Type of Connection	Size of connection			Class	Type		Body/Bonnet Style			Body Material		Trim Material	
A	B			C	D		E			F		G	
F	0	8	—	2	0	7	4	B	—	1	3	M	S

e.g.: is a 2" 600 class stainless steel bolted bonnet globe valve with MS trim

A TYPE OF CONNECTION

A – Special	**C –** Combination (threaded / socket weld)	**P –** Flanged, API 605	**S –** Threaded	**W –** Socket weld
B – Butt weld	**F –** Flanged, B16.5	**R –** Flanged, ring joint	**U –** Undrilled flanges	**X –** Butt weld

B SIZE OF CONNECTION

Customers have the choice of specifying valve size as part of the valve figure number ("B") using the numbers below, or indicating valve size separately.

EXAMPLES: W**08**-2054B-02TY (valve size is part of figure number)
2" W-2054B-02TY (valve size is shown separately)

01 – ¼" (8 mm)	**02 –** ⅜" (10 mm)	**03 –** ½" (15 mm)	**04 –** ¾" (20 mm)	**05 –** 1" (25 mm)	**06 –** 1¼" (32 mm)
07 – 1½" (40 mm)	**08 –** 2" (50 mm)				

C CLASS

0 – 150	**2 –** 600 or 800	**4 –** 2500	**6 –** 400	**8 –** 1690	**X –** Special
1 – 300	**3 –** 1500	**5 –** 4500	**7 –** 900	**9 –** 2680	

D TYPE

01 – Flow control	**06 –** Full port gate	**10 –** Continuous blowdown	**15 –** Instrument	**21 –** Boiler blowoff	**34 –** Tilting disc check
02 – Ball check	**07 –** Stop globe	**11 –** Swing check	**17 –** IREB gate	**22 –** Pressure relief	**99 –** Special
03 – Piston check	**08 –** Stop check		**18 –** Extended body gate	**23 –** Double disc gate	
05 – Conventional port gate	**09 –** Needle				

E BODY / BONNET STYLE

4 – Vertical	**7 –** Y-pattern (45° inclined two-piece)
5 – Angle	
6 – Y-pattern (inclined	**8 –** Elbow down)

A – Special	**R –** Forged bolted bonnet bellows seal	**T –** All welded bellows seal
B – Bolted bonnet (forged)		**W –** Welded bonnet
D – Diaphragm	**S –** Y-pattern bellows seal (non-rotating stem)	**Y –** Bonnetless (rotating stem)
E – Extended bonnet (cryogenic)		**Z –** Bonnetless (non-rotating stem)

F BODY MATERIAL

01 – Special	**09 –** Chr. moly, F9, C12	**14 –** Stainless steel, F316L, CF3M	**20 –** Inconel	**25 –** LCB	**31 –** LCC	**35 –** 254 SMO
02 – A105, WCB	**10 –** Stainless steel, F316H/F316(1)	**15 –** Stainless steel, F347, CF8C	**21 –** Hastelloy	**26 –** LF2	**32 –** Duplex stainless steel F51	**36 –** F321 H
04 – Chr. moly, F5, C5	**11 –** Stainless steel, F304, CF8	**16 –** Stainless steel, F304H	**22 –** Titanium	**27 –** LF3/LC3		**37 –** Incoloy
05 – Chr. moly, F11, WC6	**12 –** Stainless steel, F304L, CF3	**18 –** Stainless steel, F321	**23 –** Alloy 20	**28 –** F317		
06 – Chr. moly, F22, WC9	**13 –** Stainless steel, F316(1), CF8M	**19 –** Monel	**24 –** LF1	**29 –** F317L	**34 –** F91	

G TRIM MATERIAL

	CODE	WEDGE / DISC SEATING SURFACE (2)	SEAT SURFACE (2)	STEM
	AA	Special	Special	Special
	TY	CA15	Stellite 6	410
	TS	Stellite 6	Stellite 6	410
	MY	CF8M or 316	Stellite 6	316
	MS	Stellite 6	Stellite 6	316
	XY	Monel	Stellite 6	Monel
	XX	Monel	Monel	Monel
	HC	Hastelloy C	Stellite 6	Hastelloy C
NACE H_2S SERVICE	NA(3)	13% Chrome HRC 22 max.	Stellite 6	13% Chrome HRC 22 max.
NACE H_2S SERVICE	NB(3)	Stellite or CF8M	Stellite 6	316 or 630
NACE H_2S SERVICE	NC(3)	Monel	Stellite 6	Monel or Monel K

(1) Material Code "10" F316H/F316 has a minimum carbon content of 0.04 and is to be used if temperatures are over 1000°F (538°C). Forged F316, Material Code "13", is not suitable for temperatures above 1000°F (538°C) as it is dual certified (F316/F316L).

(2) Base material may be same as body or same as trim at manufacturer's option.

(3) NA, NB and NC trims are for NACE service and are supplied with bolting with maximum hardness of Rc. 22. NS code is used for special NACE trim and details must be specified on order.

Valve Type		Low Emissions Figure Number Designation
Standard Packed Valves	Gate or globe	Add a one-digit suffix to the figure number: **0** - for live-loading, double packing and leak-off **2** - for live-loading only **3** - for double packing and leak-off

Example: *W05-3054B-02TY-0 is 1" 1500 class carbon steel bolted bonnet gate valve with TY trim, live-loading, double packing and leak-off.*

2.1 RECEIVING INSPECTION

All valves must be examined for signs of damage that may have occured during transportation. Any damage should by analyzed and a report should be issued. Serious damage should be reported to your local Velan representative or to the Customer Service Department so that a suitable arrangement for repairs can be made without delay.

2.2 STORAGE

Valves can be stored at any temperature in a sheltered area but must be protected from contamination by dirt or the elements. The valve is shipped with end protectors on the inlet and outlet which should stay in place until the valve is ready to be installed. Before installation, the end protectors must be removed and connections must be checked for cleanliness. Visible foreign matter must be removed from end connections of weld-end valves. The weld end must be cleaned with a suitable solvent, such as acetone or alcohol. Do not use bearing solvents containing fluoride or chloride.

2.3 SPECIAL INSTRUCTIONS FOR GATE VALVES

The flow through gate valves can be from either end. There may be exceptions to this if bypass piping is welded to the valve body or pressure relief hole is drilled in one side of the valve gate. Check your piping layout drawing to ensure correct position and direction of flow. Gate valves should be installed and welded into the pipeline with the wedge or disc in the fully closed position. If the valve is left open or partially open, it could distort and leak during operation. Also, leaving the valve in a fully closed position helps prevent weld spatter from falling directly onto the mating faces of the seats. The preferred orientation of a gate valve is upright. The valve may be installed in other orientations, but any deviation from vertical is a compromise. Installation upside down is not recommended because of possible dirt build-up in the bonnet.

NOTE: Gate valves should not be used for throttling to control the flow, they are normally fully open or fully closed. If left in partially open position could result in severe damage to body seats, wedge, stem and guide rails.

2.4 SPECIAL INSTRUCTIONS FOR GLOBE VALVES

Globe valves are usually installed with the inlet below the valve seat *(Figure 2.4)*. This should be verified to prevent incorrect installation. For particularly severe throttling service, it is recommended that the valve be installed so that the flow enters over the top of the seat and goes down through it. This maintains the valve in a more stable condition, minimizes wear and reduces the potential noise level. Valve operation is also easier because reduced torque is required to close the valve.

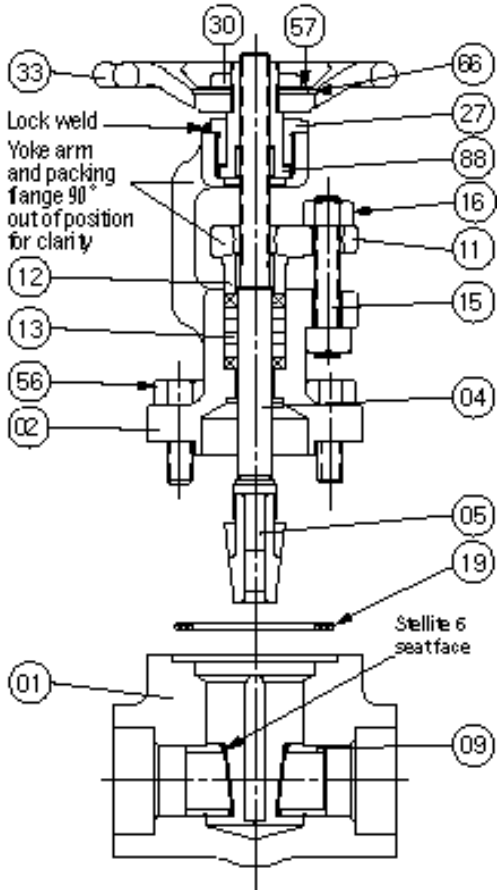

PARTS DESCRIPTION

01	- Body	**16**	- Gland nut
02	- Bonnet	**19**	- Spiral wound gasket
04	- Stem	**27**	- Yoke bushing
05	- Wedge	**30**	- Handwheel nut
09	- Seat	**33**	- Handwheel
11	- Packing flange	**56**	- Cap screw or stud and nut
12	- Gland bushing	**57**	- Washer
13	- Packing ring	**66**	- Nameplate
15	- Gland stud	**88**	- Stem nut

Figure 2.3 *Bolted bonnet gate valve*

IMPORATANT: Generally all small forged valves 1/4" to 2" have the body seats swaged in. Exception to this rule the following valves have the seats seal welded:

1. Nuclear valves of all classes and material used.
2. Navy valves of all classes and materials used.
3. Motor or pneumatic actuator valves of all classes and materials used.
4. Commercial valves:

   A- 2" full bore 800 class valves and all 1500 and 1690 class valves in F5, F9, F11, F22 F91 and stainless steel types.

   B- All 2500 and 4500 class valves and all materials used.

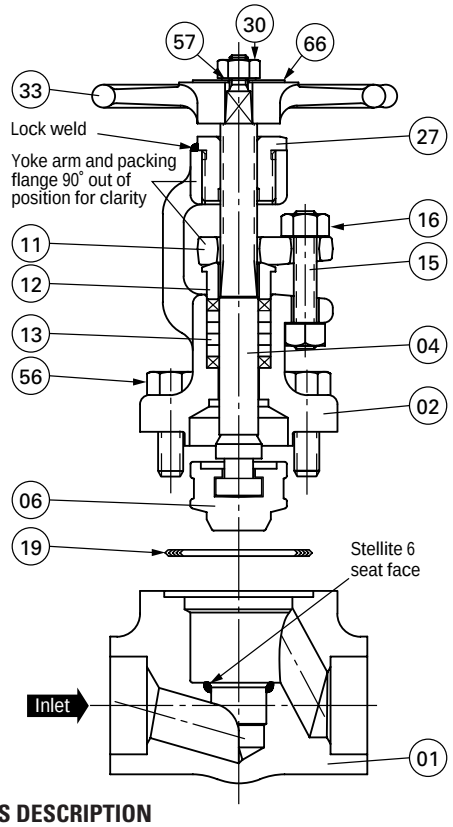

PARTS DESCRIPTION

01	- Body	**16**	- Gland nut
02	- Bonnet	**19**	- Spiral wound gasket
04	- Stem	**27**	- Yoke bushing
06	- Disc	**30**	- Handwheel nut
11	- Packing flange	**33**	- Handwheel
12	- Gland bushing	**56**	- Cap screw or stud and nut
13	- Packing ring	**57**	- Washer
15	- Gland stud	**66**	- Nameplate

Figure 2.4 *Bolted bonnet globe valve*

CAUTION: Globe valves should be installed and welded into the pipeline with the disc in a fully closed position to prevent damage to the valve during installation. Also, leaving the disc in a fully closed position helps prevent weld spatter from falling directly onto the mating faces of the seat and disc. Globe valves with soft-seated disc must be in the open position prior to welding into the pipeline. Installation upside down is not recommended because of possible dirt build-up in the bonnet.

2.5 SPECIAL INSTRUCTIONS FOR PISTON CHECK, BALL & SWING CHECK VALVES

Piston, ball and swing check valves must be installed with the inlet in the direction of the arrow, as shown in *Figures 2.5A, 2.5B and 2.5C*. This should be verified before installing the valve. Placing a piston, ball and swing check valve inlet opposite the direction of flow prevents the disc (ball) from lifting and therefore prevents normal operation of the valve.

All piston and ball check valves should be installed in a horizontal pipe run with the cover up, and the angle of incline of the line should be no more than 45° from horizontal. Also, the roll angle of the valve cover should be no more than 45° from side to side *(Figure 2.5D)*. For vertical flow condition, please consult the Velan Customer Service Department. Swing check valves should be installed in an horizontal, inclined or vertical position. The roll angle of the valve cover should be no more than 45° from side to side *(Figure 2.5C).*

NOTE: All check valves should be installed at least ten pipe diameters away from upstream pumps, elbows, fittings or equipment. If closer installation is required, please consult the Velan Customer Service Department.

WARNING: Soft-seated piston and swing check valves should not be welded into the pipeline with the soft-seated disc in the valve. The disc must be removed and reinstalled after the valve is welded into the pipeline.

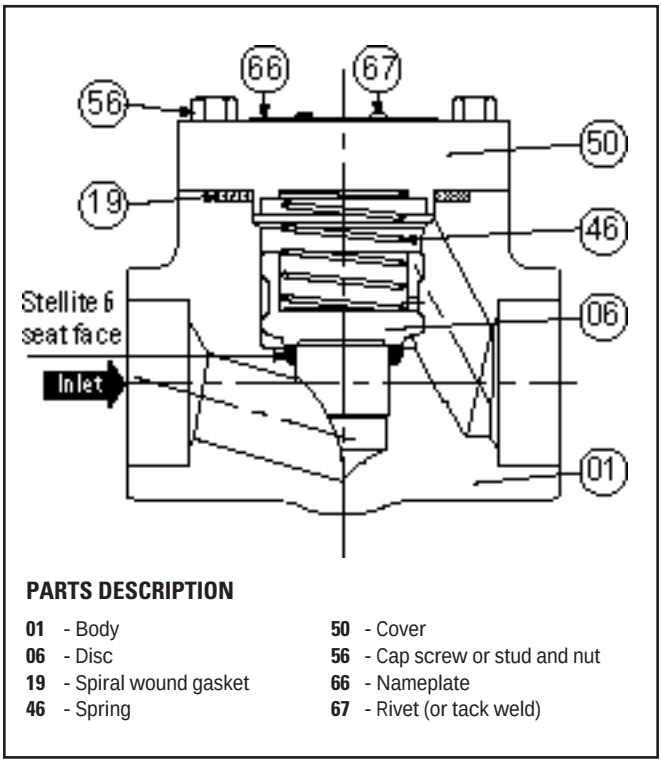

PARTS DESCRIPTION

01	- Body	**50**	- Cover
06	- Disc	**56**	- Cap screw or stud and nut
19	- Spiral wound gasket	**66**	- Nameplate
46	- Spring	**67**	- Rivet (or tack weld)

Figure 2.5A *Bolted cover piston check valve*

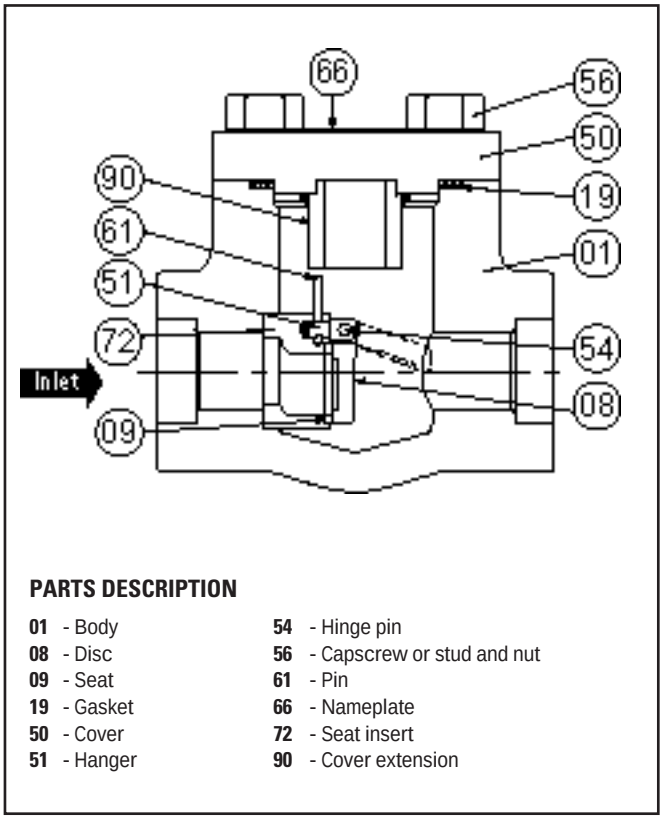

PARTS DESCRIPTION

01	- Body	**54**	- Hinge pin
08	- Disc	**56**	- Capscrew or stud and nut
09	- Seat	**61**	- Pin
19	- Gasket	**66**	- Nameplate
50	- Cover	**72**	- Seat insert
51	- Hanger	**90**	- Cover extension

Figure 2.5B *Bolted cover swing check valve*

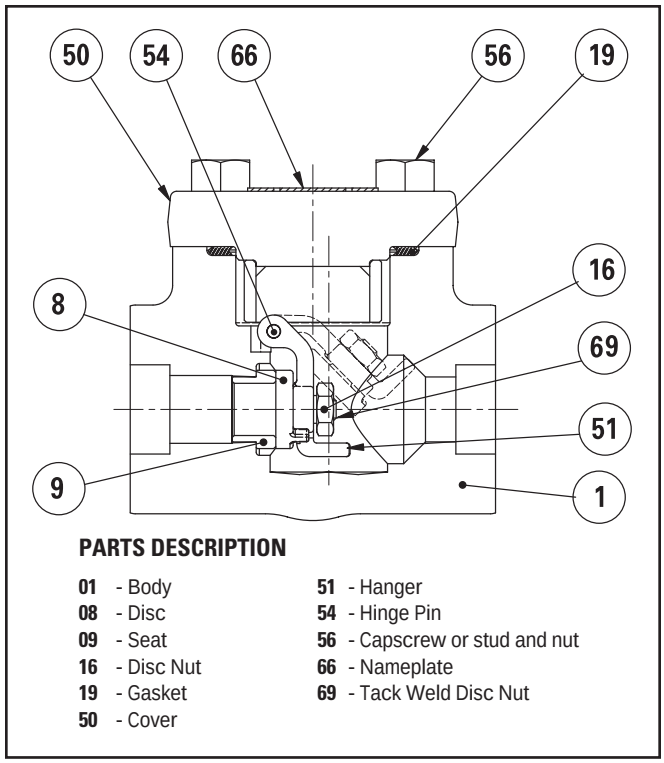

PARTS DESCRIPTION

01	- Body	**51**	- Hanger
08	- Disc	**54**	- Hinge Pin
09	- Seat	**56**	- Capscrew or stud and nut
16	- Disc Nut	**66**	- Nameplate
19	- Gasket	**69**	- Tack Weld Disc Nut
50	- Cover		

Figure 2.5C *Bolted Cover Swing Check - Integral hinge*

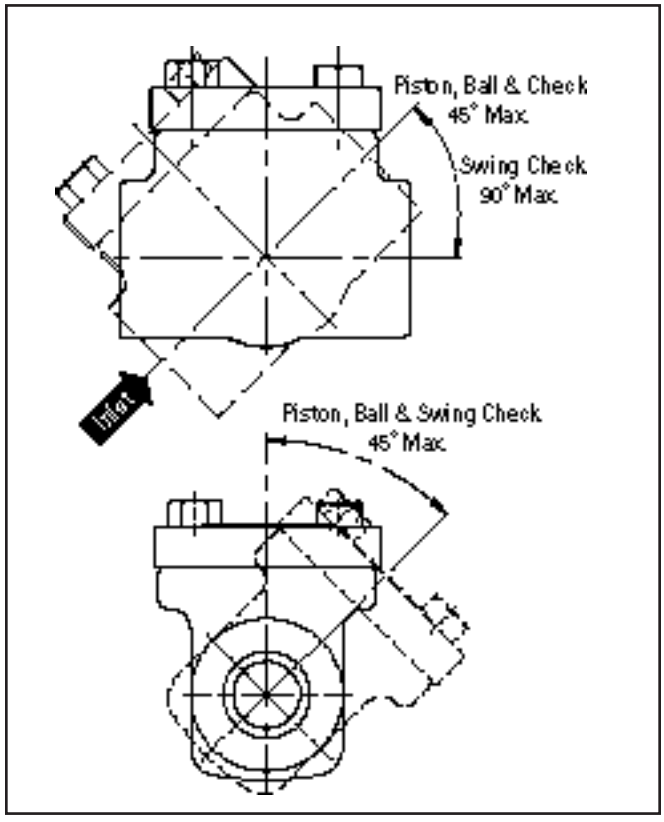

Figure 2.5D *Check valve: angle of incline and roll angle*

FOR SAFETY REASONS,

it is important to take these precautions

- *Personnel making any adjustments on the valves should wear safety equipment normally used to work with fluid in the line where the valve is installed.*
- *Before removing the yoke nut under pressure, the valve should be in fully open position in order to prevent injuries.*
- *Before removing a valve from a line, line pressure must be relieved with no exception.*
- *Velan valves can be equipped with a variety of manual gear, electric motor, hydraulic or pneumatic actuators. Generally, all pressure must be relieved from both sides of the valve before the actuator is removed.*
- *A valve in the fully open position (backseated), should not be jammed-tight (over-torqued), to avoid thermal binding. It is our recommendation that the valve be removed 1/4 turn of the handwheel from the fully open position. This will also ensure that packing tightness is verifiable. In gear-operated valves, because of the backlash, it is difficult sometimes to ensure this position.*
- *Valve standards, such as API and MSS, caution users that successful completion of a backseat test should not be construed as a recommendation by the manufacturer that a valve may be repacked while it is under pressure. The backseat may be used as a means of stopping or reducing packing leakage until the packing can be replaced under no pressure. Removal of packing with the valve under pressure is at the owner's risk.*

4.1 OPERATION

4.1.1 General

All valves should be checked before being put into operation and should be inspected regularly during operation. Prompt attention should be paid when trouble arises. As a general rule, valves should be subjected to scheduled maintenance.

4.1.2 Smoothness of Operation

Stem threads, stem nuts and other working components outside the fluid area should be lubricated frequently (at least once every six months). Specific lubricants and frequency of application are shown in *Table 4.2*.

IMPORTANT: Excessive handwheel effort can indicate the following:

1. Improperly lubricated or damaged valve stem.
2. Valve packing compression too tight *(see Table 4.1.2 for torques)*.
3. Faulty or damaged valve parts.

4.1.3 Seat Tightness and Closing Torques

Even a new valve with seating faces lapped to perfection and a full seat-wedge or disc contact will be pressure-tight only if sufficient stem load is applied. The minimum stem load for each size of valve varies with operating pressure in order to seat the valve properly. Slight over-torquing will not damage the valve.

CAUTION: Do not use "cheaters" on the handwheel.

Table 4.1.2 *Packing flange nut torques for gate or globe valves (graphite ribbon or PTFE packing)*

				GATE VALVES		GLOBE VALVES	
SIZE IN	SIZE (mm)	CLASS	STUD SIZE	TORQUE lb•in	TORQUE (Nm)	TORQUE lb•in	TORQUE (Nm)
¼–½	(8–15)	150–800	¼–20UNC	24	(2.7)	24	(2.7)
¼–¾	(8–20)	900–1690	⅜–16UNC	45	(5.1)	90	(10.2)
½–1	(15-25)	2500	7⁄16–14UNC	150	(16.9)		
¾–1	(20-25)	150–800	5⁄16–18UNC	40	(4.5)	50	(5.6)
1	(25)	900–1690	7⁄16–14UNC	100	(11.3)	130	(14.7)
1¼–1½	(32–40)	150–800	⅜–16UNC	85	(9.6)	85	(9.6)
1¼–1½	(32–40)	2500	7⁄16–14UNC	130	(15.3)		
1¼–2	(32–50)	900–1690	7⁄16–14UNC	145	(16.4)	130	(14.7)
2	(50)	150–800	⅜–16UNC	85	(9.6)	90	(10.2)
2	(50)	2500	7⁄16–14UNC	160	(18.1)		

NOTE: *For other sizes and packing materials, contact the manufacturer.*

4.2 RECOMMENDED LUBRICATION

Table 4.2 *Recommended lubrication*

PART	LUBRICATION	APPLICATION	FREQUENCY
Stem threads	Exxon: Ronex MP, Castrol MP or equivalent MP group (up to 650°F) Ronex Extra duty 2 (above 650°F)	Directly to threads	When threads appear dry
Yoke nut	Exxon: Ronex MP, Castrol MP or equivalent MP group (up to 650°F) Ronex Extra duty 2 (above 650°F)	Inject through grease fitting at hub of yoke	Concurrently with stem thread lubrication
All threaded parts except stem and yoke nut	- Anti-seize compound No. 425-A (Crane) or equivalent - Nickel Anti-Seize to MIL-A-90TE or MOLYKOTE P37	Thin coat on threads	On valve assembly only

Recommended lubricant subject to change without notice.

5.1 PACKING CHAMBER LEAKAGE

5.1.1 General *(Figures 2.3 and 2.4)*

If moisture or dripping occurs around the stem (04) or the gland bushing, the following points must be investigated before removing the packing rings (13).

CAUTION: For safety reasons, the valve must be depressurized before removing packing (13) or dismantling gland nuts (16).

1. Check if the packing flange bolting is torqued to the correct torque as shown in *Table 4.1.2*.
2. Make sure the gland bushing (12) is not binding against the packing chamber wall or stem (04).
   If so, open valve to backseat position and firmly tighten up on backseat. Loosen the gland nuts (16) and realign the gland bushing (12). Retighten the packing flange (11) with the gland nuts (16), a little at a time on each side, then torque down to the correct torque as shown in *Table 4.1.2*.
3. After retightening, cycle the valve three to five times and retighten gland nuts (16) after each cycle until fully consolidated to original torque value *(Table 4.1.2)*. Slacken the gland nuts (16) slightly if torque is too high. If steps 1 to 3 do not stop leakage, proceed with the removal and replacement of packing rings (13).

5.1.2 Packing Ring Removal on line – Use of Backseat

For safety reasons, follow warning instructions in *Section III* before replacing packing rings on line. The valve must be depressurized.

1. Remove the packing flange nuts and, if fit with live-loading, remove Belleville spring washers.
2. Lift packing flange and gland bushing as high as possible and secure.
3. For braided packing rings: *Figures 5.1E and F* use special flexible removal tools (cork screw tip) *Figure 5.1A* screw into the packing ring and pull out.

   For graphite ribbon packing *Figure 5.1E and F* with special "C" saw tool *Figure 5.1B* cut through the packings, apply downward pressure as you work the tool in a back and forth motion. Blow out packing remains using instrument air or suck out with a vaccum cleaner. Care must be taken not to scratch the stem or the walls of the packing chamber during the removal of the packing rings.
4. If the valve is equipped with a leak-off pipe, there is a lantern ring after the third packing ring. To remove the lantern ring, insert two hooks into the holes at the top of the lantern ring and pull out.
5. After the lantern ring is lifted, the last four packing rings can be removed using the procedure described in step 3.

   NOTE: The use of packing removal tools can facilitate packing removal and save considerable time see *Figure 5.1A and 5.1B*.

5.1.3 Repacking with Uncompressed Packings

Velan generally uses two types of packings: pre-formed graphite ribbon continuous ring and braided graphite, or PTFE. The packing procedure is basically the same for both types of packing.

Before inserting the packing ring (13A), check the stem (4) and the packing chamber wall to make sure there is no damage. Scratches up to 0.005 in (0.13 mm) can be removed by polishing the surface with an extra fine emery cloth or by machining skimcut.



Figure 5.1A *Flexible packing removal tool cork screw tip*



Figure 5.1B *"C"-saw packing removal tool*

Graphite ribbon packing may be cut as shown in *Figure 5.1C* to facilitate insertion into bonnet chamber.

1. Repacking valves using "packing consolidation method".
   a) Insert one braided packing ring, followed by intermediate graphite packings and one last braided packing ring *refer to Figure 5.1H*. Lower the gland bushing and check for bushing positive engagement.

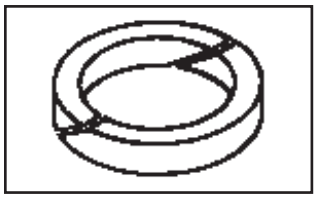

Figure 5.1C *Graphite ribbon packing*

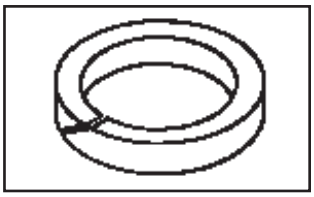

Figure 5.1D *Braided graphite packing ring*

NOTE: As a rule of thumb ⅛" (3.2 mm) min. engagement of the gland bushing inside the packing chamber is required *(Figure 5.1B)*.

b) Torque down the gland bolts to torque values shown in *Table 4.1.2*.

c) Cycle the valve approximately the length of the packing chamber. First open then close and retighten the gland bolts to appropriate torque values. Repeat this step approximately four, five times until the packings become fully consolidated (no more loss of torque)

NOTE: For motor operated valves (mov) use mov manual override handwheel to cycle open & close.

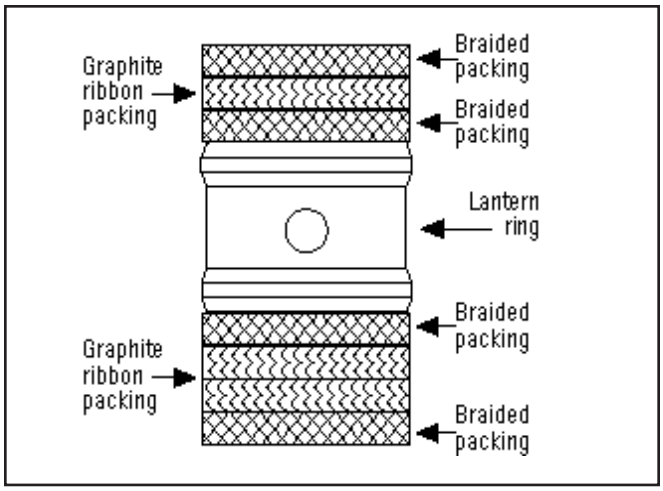

Figure 5.1E *Lantern ring configuration*

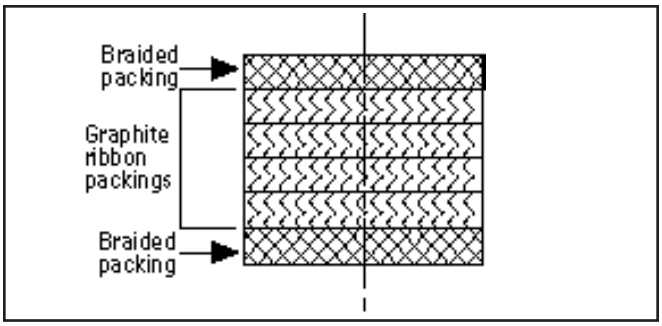

Figure 5.1F *Six packings shown*

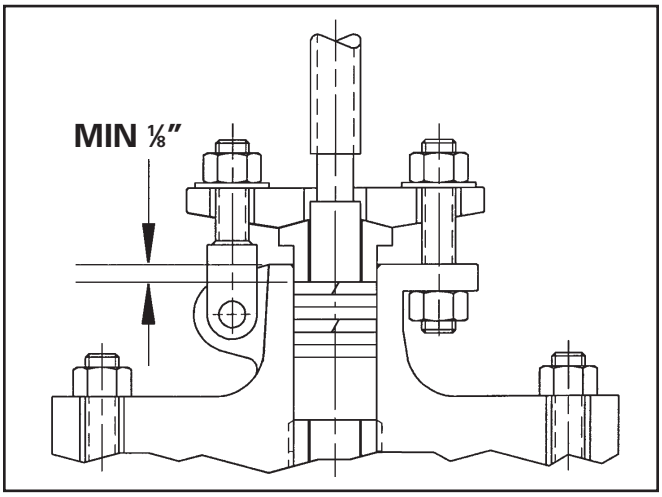

Figure 5.1G *Six packings installed*

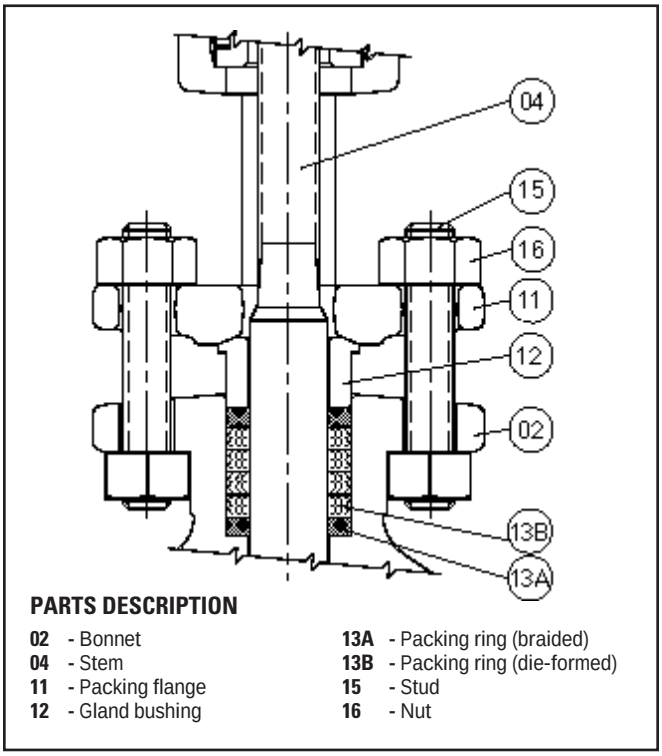

PARTS DESCRIPTION

02	- Bonnet	**13A**	- Packing ring (braided)
04	- Stem	**13B**	- Packing ring (die-formed)
11	- Packing flange	**15**	- Stud
12	- Gland bushing	**16**	- Nut

Figure 5.1H *Packings installed*

5.1.5 Packing Torques

1. Clean all gland studs (15) and gland nuts (16). Visually inspect all threads to ensure removal of all foreign matter, rust, corrosion, burrs and previous lubricant.
2. Liberally cover the stud threads and the female threads of the nuts with anti-seize compound FEL-PRO C5-A or approved equivalent.
3. With gland nuts (16) hand-tight, tighten them a little at a time on each side, then torque down to the correct torque in accordance with the valve type, size and pressure class, as shown in *Table 4.1.2*.
4. Values given in *Table 4.1.2* are approximate for standard Velan valves. Whenever possible, refer to the Project Engineering drawing for a particular valve and its torque.

5.2 BODY-BONNET JOINT TIGHTNESS

5.2.1 General *(Figures 2.3, 2.4, 2.5A and 2.5B)*

To maintain the joint tightness of a factory-tested bolted bonnet valve, it is essential to exert sufficient bolt tension at all times by having the proper torque on the nuts. The original torque might be lessened due to vibration, relaxation of material caused by frequent temperature and pressure fluctuations, or by creep in high-temperature applications. It is recommended that the gasket joint be inspected for leakage periodically. The joint bolt tension should be checked at approximately one-year intervals.

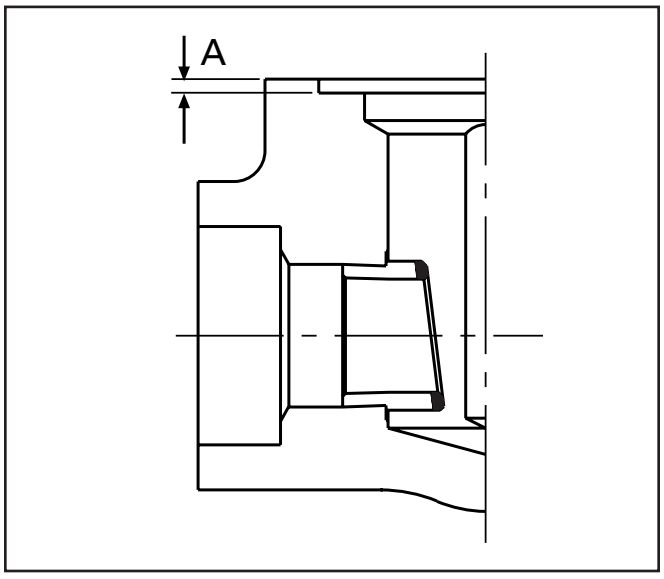

Figure 5.2A *Gasket recess*

5.2.2 Body-Bonnet Bolt Torquing

The recommendations in this section are for ideal conditions. Due to the many interacting tolerances, some latitude must be allowed in the acceptance standards as follows:

The spiral wound gasket (19) may be fully compressed (zero gap between interfaces of the joint) at 110% of the torque given in *Table 5.2*. The following criteria should be used *(see Figure 5.2A)*.

The bolt torque is satisfactory if:

a) The spiral wound gasket is fully compressed at 90% of the recommended bolt torque, provided that 100 percent torque is finally applied.

b) The spiral wound gasket is fully compressed at 100 percent torque.

c) The gap between the interfaces of the joint is not more than 0.003" (0.08") after 125 % torque has been applied and the bolts have been slackened individually and retorqued at 100% torque.

Gasket recess "A" dimension *(Figure 5.2A)*
0.085 – 0.090" (2.15 – 2.30 mm)

Gasket thickness
⅛" (3.2 mm) nominal

NOTE: Bonnet machining does not control gasket compression. Any repair to the body recess should maintain the "A" dimension.

5.2.3 Torque Procedure

1. Clean all studs and nuts and inspect all threads to ensure removal of all foreign matter, rust, corrosion, burrs and previous lubricant.
2. Liberally cover the cap screw (stud) threads and surface under the nut head with anti-seize compound FEL-PRO C5-A or approved equivalent. Also lubricate the female threads of the nuts. Wipe off, with approved solvent, any excess lubricant that may adhere to the steel parts. Approved solvents for this work are acetone, alcohol or Freon PCA.

   NOTE: The use of other solvents is not recommended.
3. With bolts hand-tight, follow the bolt-tightening sequence shown in *Figure 5.2B*. The sequence depends upon the number of bolts employed and the sketch shows only one possible tightening sequence. The bolts must be torqued to the recommended values shown in *Table 5.2*.

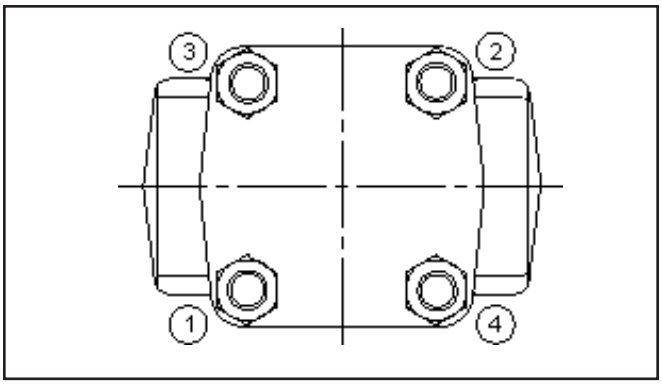

Figure 5.2B *Bolt tightening sequence*

Table 5.2 *Torque values (100%) for body-bonnet bolting*

Bolt Size	Bolting Material	
	B7, 630 B8M2, 8M	660
5/16 – 18UNC	12 (16)	10 (14)
3/8 – 16UNC	20 (27)	20 (27)
7/16 – 14UNC	30 (41)	30 (41)
1/2 – 13UNC	50 (68)	45 (61)
9/16 – 12UNC	70 (95)	62 (84)
5/8 – 11UNC	95 (129)	85 (115)
3/4 – 10UNC	170 (231)	150 (203)
7/8 – 9UNC	270 (366)	240 (325)

NOTE: *1) All values lb·ft (Nm). Torque tolerance +10%.*
2) For other sizes and bolting materials, please contact the manufacturer.

5.2.4 Application of Torque

When applying the torque to the bolts, each bolt should be torqued in steps of approximately 20% of the final torque. As the final torque is approached, the required step will be much less than 20%.

CAUTION:

1. If tightening sequence is not followed, it is possible that the spiral wound gasket will not be compressed evenly, causing the body-bonnet joint to leak.
2. Over-torquing could deform the bonnet flange and cause joint leakage.
3. Do not use an impacting device to draw up the bolting on body and bonnet (cover) closures.

5.2.5 Replacement of Spiral Wound Gasket

1. The gasket seating faces (the recess in the body and the bonnet face) must first be checked for smoothness. Scratches can normally be removed with an emery cloth. The faces should then be solvent degreased and dried before assembly. Approved solvents are acetone, alcohol or Freon PCA.
2. Install new spiral wound gasket between the body and bonnet joint. The body is now ready for installation of the bonnet assembly and tightening of the bolting in accordance with the torquing procedure.

CAUTION: Valve must be partially open when torquing bolts to prevent damage to seating surface.

6.1 SEAT LEAKAGE

6.1.1 General

An indication that a valve leakage exists after a valve has been properly closed may be found by observing the pressure loss in the line on the high pressure side of the valve. In the case of hot water or steam lines, note whether the downstream pipe remains hot beyond the usual length of time. This type of leak may be the result of a distorted seat, caused by improper welding of the valve into the pipeline, or by stress-relieving temperature that may have been used during installation, or by foreign matter damage.

Leaks can also be caused by failure to close the valve tightly, resulting in high-velocity flow through a small opening. In spite of the fact that the hardfacing material (Stellite) is corrosion and erosion resistant, grooves, pit marks or other surface irregularities may still form on the mating faces. Valves which leak should be repaired as soon as possible to prevent greater damage caused by high-velocity flow.

6.1.2 Wedge Repairs: Gate Valves

1. Disassemble valve as described in *Section 6.2* and inspect the wedge and seats for scratches, pitting marks or other damage.
2. If seating faces are scratched, they quite often can be polished with very fine emery cloth on a perfectly flat surface.
3. If polishing is not sufficient, the wedge must be lapped. Slight pitting, grooving or indentation can be removed by lapping. If defects cannot be corrected by lapping, the wedge can be ground or machined. No more than 0.005 in (0.13 mm) per side should be removed. Relap the wedge after grinding (or machining).
4. A flat plate, preferably cast iron, should be used for lapping, and an abrasive lapping compound mixed with olive oil should be evenly distributed over the plate. Only light, even pressure should be applied with the wedge on the plate. Lift the wedge as often as possible to prevent accumu-lation of particles in one area and to allow for proper distribution of lapping compound.

   The lapping plate should be turned slightly every few strokes to keep a flat surface. The wedge should be lapped until seating faces are smooth. Velan recommends the use of Clover Compound (silicon carbide) Grade D or C, or an approved equivalent.
5. Thoroughly clean off the lapping compound with a suitable cleaning fluid, such as acetone or alcohol. Do not use bearing solvents containing chloride or fluoride.

CAUTION: Lapping may be slow due to the erosion-resistant surface, but too much lapping must be avoided.

6.1.3 Seat Repairs: Gate Valves

1. Automatic grinding and lapping of seat faces can be done by specialized equipment. Information on this type of equipment can be obtained from certain Velan authorized repair facilities. For further details on such operations, contact Velan *Customer Service Department.*
2. In those cases where the automatic grinding and lapping machine is not employed, seat faces must be repaired using a lapping plate. The plate should be made of cast iron if possible and should be large enough to cover the face of the seat. Apply lapping compound mixed with olive oil and distribute evenly over the plate. Lap seat by moving lapping plate in a circular motion on seat face. Lift the plate as often as possible to prevent accumulation of particles in one area and to allow for proper distribution of the lapping compound. Lap until both seats have smooth faces and then clean off the lapping compound very thoroughly with a suitable cleaning fluid such as acetone or alcohol.

6.1.4 Fitting of Repaired Parts: Gate Valves

1. After the seating faces of the wedge and/or seats have been relapped and cleaned, you must check the wedge-seat fit. Place the marked-up side of the wedge together with marked-up side of the seat. Slowly lower the wedge into the body and find the correct mating point of the faces. Use bearing blue to check seat contact. Spread a light coating of bearing on wedge seating faces, slip wedge onto the stem. Lower stem/wedge together with the bonnet. Secure bonnet with studs/nuts. With the handwheel, close the valve firmly and than open partially, remove bonnet nuts and lift entire bonnet assembly. Care should be taken that the wedge does not slip off the stem "T" head. Check wedge seating face for 100% contact as shown in *Figure 6.1A.*
2. If a part cannot be repaired, new parts must be fitted and installed. All spare part wedges can be supplied slightly oversized. They must be ground or machined and lapped as needed to fit over the full circumference of the seat. Contact Velan Customer Service Department. for ordering details.
3. *Figure 6.1A* illustrates a wedge with a full seating circumference. This must be achieved when fitting a wedge.
4. When fitting a wedge, it is also important that the wedge guide slots have sufficient clearance to allow the wedge to move freely along the wedge guides, as shown in *Figure 6.1B (top view)*. Otherwise the wedge may be prevented from making full contact with seats.

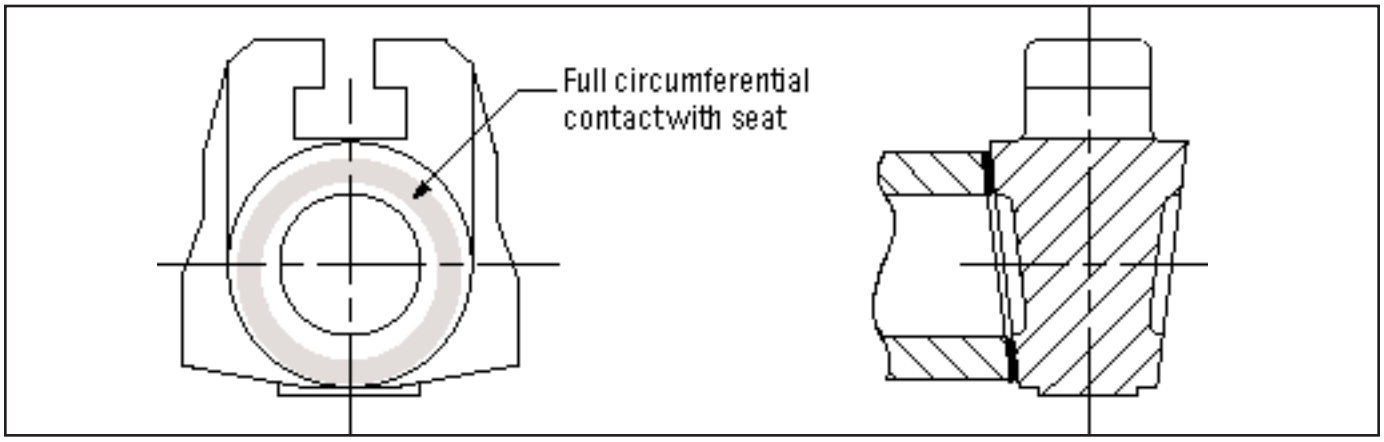

Figure 6.1A *Wedge seating face*

NOTE: *Shaded area represents the preferred seating face.*

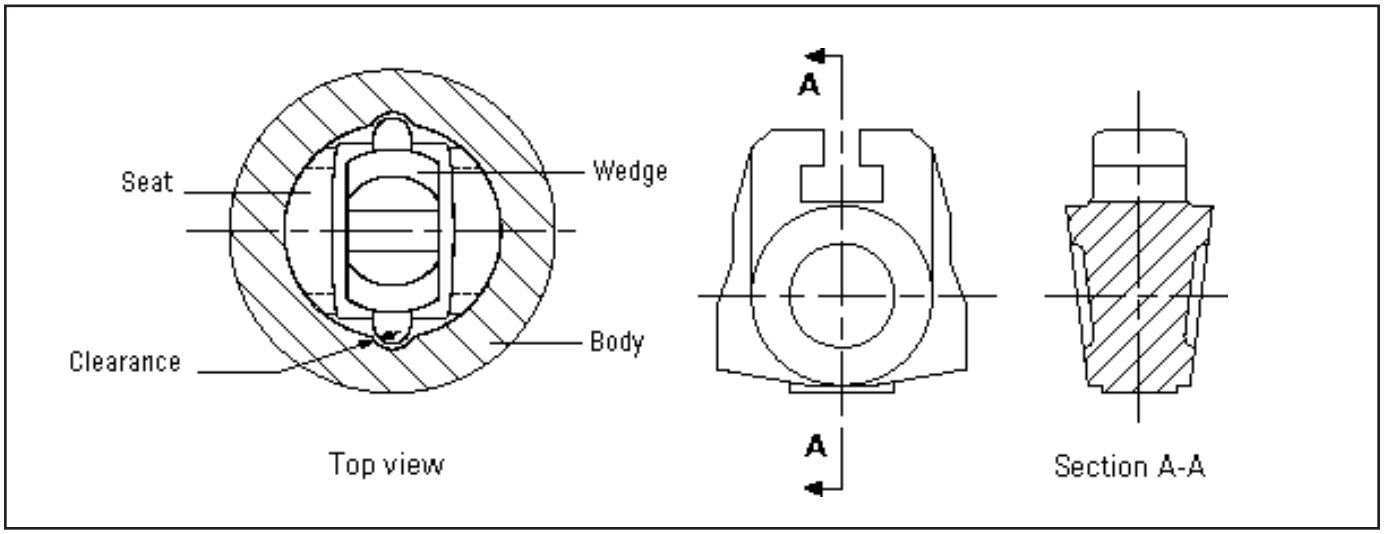

Figure 6.1B *Gate valve wedge*

6.2 DISASSEMBLY OF GATE VALVES

6.2.1 General

There are two basic ways to disassemble Velan valves: (a) total disassembly, and (b) partial disassembly to allow access to the area which requires maintenance. The appropriate method to use depends on the nature of the problem:

Total disassembly: valve internal problems, spiral wound gasket, wedge, etc.

Partial disassembly: valve top works, handwheel.

> **CAUTION**: Make sure all pressure has been relieved from both sides of the valve before starting disassembly work.

6.2.2 Total Disassembly

The disassembly instructions below cover Velan's basic designs. As general disassembly progresses, place matching marks on parts so that the same orientation of parts can be maintained at reassembly. *Refer to Figure 2.3.*

1. The valve should be in a partially open position.
2. If the valve has a leakoff pipe, it must be disconnected first. Cut the leakoff pipe approximately six inches from the bonnet side and not at the welded joint on the bonnet.
3. Remove body-bonnet cap screws (nuts) (56).

   NOTE: If a valve has been in high-temperature service for extensive periods of time, the cap screws (nuts) may be seized to the body (studs). Tight nut threads can sometimes be loosened by applying penetrating oil or heat to the nut and working it free. As a last resort, a hacksaw, cutting torch or cold chisel can be used to cut nut away from stud.
4. Once all the cap screws (nuts) are removed, the entire yoke-bonnet assembly can be lifted out of the valve body as shown in *Figure 2.3*.
5. Remove used spiral wound gasket (19).
6. The valve is now ready for inspection and repairs of wedge, seat, etc.
7. During inspection, check the condition of the body-bonnet cap screws (studs) (56). Studs may have been damaged when removing seized nuts or when lifting the yoke-bonnet assembly. If cap screws (studs) are damaged, remove and replace them.

   NOTE: When lifting the yoke-bonnet assembly, care should be taken to prevent internal parts from disengaging from the stem. The wedge (05) is attached to the stem (04) with a "T" slot, and it can slip off the stem when disengaging from the guides in the body.

6.3 REASSEMBLY OF GATE VALVES

6.3.1 General

The reassembly procedures are not as detailed as the disassembly procedures since in most cases the reverse procedure is required.

1. The most important consideration is the cleanliness of all parts. Rust and dirt should be removed from all parts with a wire brush or emery cloth. Oil and grease should be removed with suitable solvents.
2. Threaded parts (cap screws, nuts, studs) must be well relubricated. Old grease should be removed from the stem and stem nut threads before a new coat of grease is applied. Recommended lubricants can be found in *Table 4.2*.

   NOTE: Use correct lubricant for each individual part.
3. Repaired or replaced parts must be checked to make sure that repair procedures have been done and that replaced parts (e.g., packing rings, spiral gasket, etc.) have been checked for size so that they will fit into the valve you are servicing.
4. All orientation marks assigned during disassembly must be observed so that correct assembly is maintained.

7.1 SEAT LEAKAGE

7.1.1 General

An indication that a valve leakage exists after a valve has been properly closed may be found by observing the pressure loss in the line on the high pressure side of the valve. In the case of hot water or steam lines, note whether the downstream pipe remains hot beyond the usual length of time. This type of leak may be the result of a distorted seat, caused by improper welding of the valve into the pipeline, or by stress-relieving temperature that may have been used during installation.

Leaks can also be caused by failure to close the valve tightly, resulting in high-velocity flow through a small opening. In spite of the fact that the hardfacing material (Stellite) is corrosion- and erosion-resistant, grooves, pit marks or other surface irregularities may still form on the mating faces. Valves which leak should be repaired as soon as possible to prevent greater damage caused by high-velocity flow.

7.1.2 Seat Repairs: Globe Valves

1. Disassemble the valve as described in *Disassembly of Globe Valves, Section 7.2,* and inspect the disc and seat for scratches, pitting marks or other damage.
2. If there are deep pitting marks, use a cast iron lapping disc with the proper seat angle and a suitable lapping compound to roughen the surface first. With the use of a new, or already refinished original disc, you can use a finer lapping compound to finish lapping the disc and seat together.
3. a) Use a guiding plate for the stem to maintain alignment during the lapping operation. It can be made from wood or any other suitable material, to the dimensions of the gasket and the bonnet spigot. The section of the plate where the stem extends through must be 1⁄64" (0.4 mm) larger than the outside diameter of the stem.

   b) If the valve has a soft-seated disc, all body lapping must be done with a lapping disc and not with a soft-seated disc
4. Evenly distribute a small quantity of lapping compound mixed with olive oil on the two mating surfaces.
5. It is important to apply only light, even pressure when lapping seats and to rotate reciprocally. For best results, use an air or electric hand tool with adjustable speed and reciprocal movement. The lapping tool should be lifted frequently and turned to a new starting position.

7.1.3 Fitting of Repaired Parts: Globe Valves

1. After the seating faces of the disc and seat have been relapped and cleaned with a suitable cleaning fluid, such as acetone or alcohol, the results of the lapping must be verified by a blueing test to check for full circumferential contact. A blueing ink should be distributed smoothly and equally over the seating diameter of the disc. Slowly lower the part into the body and find the correct mating point of the faces.
2. When fitting the disc, it is important that the inside diameter of the body be checked for sufficient clearance to allow the disc to move freely up and down. A visual examination of the body wall is recommended. Any grooves or scratches should be polished with a fine emery cloth. It is also important to verify that the disc cannot be forced sideways against the outlet side of the waterway bore and become jammed in that position.
3. Contact between the valve disc and stem is made by a radius on the end of the valve stem *(Figure 7.1A)*, which is designed to give center loading for the disc. If particles get trapped between the end of the valve stem and the disc, the center loading of the stem can be shifted and the disc will not seat tightly. The contact surfaces of the stem and the disc must be checked first on leaky valves in order to ensure that the stem-disc contact is in proper condition.

   NOTE: A quick test is to take the stem-disc assembly and check if the disc can be rocked. The rocking will allow the disc to self-align to the seat.

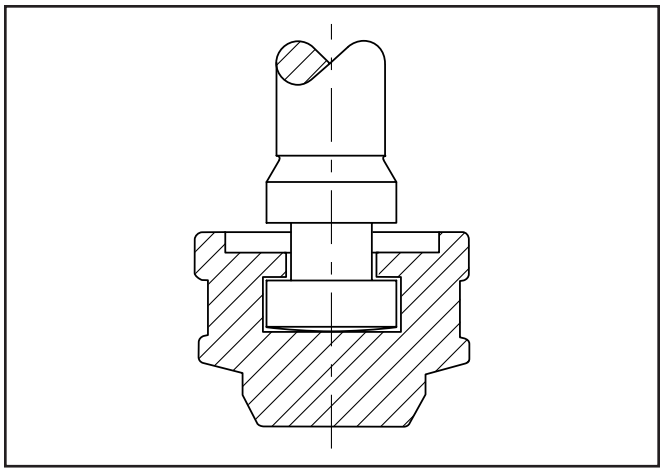

Figure 7.1A *Stem disc contact area*

7.2 DISASSEMBLY OF GLOBE VALVES

7.2.1 General

There are two basic ways to disassemble Velan valves: (a) total disassembly, and (b) partial disassembly to allow access to the area which requires maintenance. The appropriate method to use depends on the nature of the problem:

Total disassembly: valve internal problems, spiral wound gasket, disc, etc.

Partial disassembly: valve top works, handwheel.

CAUTION: Make sure all pressure has been relieved from both sides of the valve before starting disassembly work.

7.2.2 Total Disassembly

The disassembly instructions below cover Velan's basic designs. As general disassembly progresses, place matching marks on parts so that the same orientation of parts can be maintained at reassembly. *Refer to Figure 2.4.*

1. The valve should be in a partially open position.
2. If the valve has a leakoff pipe, it must be disconnected first. Cut the leakoff pipe approximately six inches from the bonnet side and not at the welded joint on the bonnet.
3. Remove body-bonnet cap screws (nuts) (56).

   NOTE: If a valve has been in high-temperature service for extensive periods of time, the cap screws (nuts) may be seized to the body (studs). Tight nut threads can sometimes be loosened by applying penetrating oil or heat to the nut and working it free. As a last resort, a hacksaw, cutting torch or cold chisel can be used to cut nut away from stud.
7. Once all the cap screws (nuts) are removed, the entire yoke-bonnet assembly can be lifted out of the valve body as shown in *Figure 2.4.*
5. Remove used spiral wound gasket (19).
6. The valve is now ready for inspection and repairs of disc, seat, etc.
7. During inspection, check the condition of the body-bonnet cap screws (studs) (56). Studs may have been damaged when removing seized nuts or when lifting the yoke-bonnet assembly. If cap screws (studs) are damaged, remove and replace them.

   NOTE: When lifting the yoke-bonnet assembly, care should be taken to prevent internal parts from disengaging from the stem. Some discs (6) are attached to the stem (4) with a “T” slot, and they could slip off the stem when it disengages from the guides in the body.

7.3 REASSEMBLY OF GLOBE VALVES

7.3.1 General

The reassembly procedures are not as detailed as the disassembly procedures since in most cases the reverse procedure is required.

1. The most important consideration is the cleanliness of all parts. Rust and dirt should be removed from all parts with a wire brush or emery cloth. Oil and grease should be removed with suitable solvents.
2. Threaded parts (cap screws, nuts, studs) must be well relubricated. Old grease should be removed from the stem and stem nut threads before a new coat of grease is applied. Recommended lubricants can be found in *Table 4.2.*

   NOTE: Use correct lubricant for each individual part.
3. Repaired or replaced parts must be checked to make sure that repair procedures have been done and that replaced parts (e.g., packing rings, spiral gasket, etc.) have been checked for size so that they will fit into the valve you are servicing.
4. All orientation marks assigned during disassembly must be observed so that correct assembly is maintained.

8.1 SEAT LEAKAGE

8.1.1 General

An indication that a valve leaks could be caused by improper welding of the valve into the pipeline, or by stress-relieving temperature that may have been used during installation.

In spite of the fact that the hardfacing material (Stellite) is corrosion and erosion resistant, grooves, pit marks or other surface irregularities may still form on the mating faces. Valves which leak should be repaired as soon as possible to prevent greater damage.

8.1.2 Seat Repairs: Piston and Ball Check Valves

1. Disassemble the valve as described in *Disassembly of Small Bolted Cover Piston and Ball Check Valves, Section 8.2.2*, and inspect the |disc and seat for scratches, pitting marks or other damage.
2. If there are deep pitting marks, use a cast iron lapping disc with the proper seat angle and a suitable lapping compound to roughen the surface first. With the use of a new, or already refinished original disc, you can use a finer lapping compound to finish lapping the disc and seat together.
3. **a)** Use a guiding plate for the shaft to maintain alignment during the lapping operation. It can be made from wood or any other suitable material, to the dimensions of the gasket and the bonnet spigot. The section of the plate where the shaft extends through must be 1/64" (0.4 mm) larger than the outside diameter of the shaft.

   b) If the valve has a soft-seated disc, all body lapping must be done with a lapping disc and not with the soft-seated disc.
4. Evenly distribute a small quantity of lapping compound mixed with olive oil on the two mating surfaces.
5. It is important to apply only light, even pressure when lapping seats and to rotate reciprocally. For best results, use an air or electric hand tool with adjustable speed and reciprocal movement. The lapping tool should be lifted frequently and turned to a new starting position.

8.1.3 Seat Repairs: Swing Check Valves

If repairs are required on the seat of a swing check valve, the procedure is the same as described in *Section 6.1.3, Seat Repairs Gate Valves*. The only difference between these seats is the angle of the seat face. They can be repaired with an automatic grinding or lapping machine or manually.

8.1.4 Fitting of Repaired Parts: Piston Check Valves

1. After the seating faces of the disc and seat have been relapped and cleaned with a suitable cleaning fluid, such as acetone or alcohol, the results of the lapping must be verified by a blueing test to check for full circumferential contact. A blueing ink should be distributed smoothly and equally over the seating diameter of the disc. Slowly lower the part into the body and find the correct mating point of the faces.
2. When fitting the disc, it is important that the inside diameter of the body be checked for sufficient clearance to allow the disc to move freely up and down. A visual examination of the body wall is recommended. Any grooves or scratches should be polished with a fine emery cloth. It is also important to verify that the disc cannot be forced sideways against the outlet side of the waterway bore and become jammed in that position.

8.1.5 Supplementary Instructions for Soft-Seated Piston Check Valves

Velan soft-seated piston check discs come in three basic designs.

1. EPDM SEAT If replacing an EPDM seat *(Figure 8.1A)*, remove tack weld or staked area by grinding or filing. Carefully unscrew the disc nut (16) from the disc. Remove the seat holder (71), then the EPDM soft seat (72A). Thoroughly clean the piston disc soft seat area and disc post threads, removing any burrs and or particles of foreign matter. Install a new EPDM seat, replace seat holder and screw on the disc nut.

   NOTE: The disc nut should be tightened metal-to-metal to protrude through the soft seat 1/32 to 1/16" (0.8 - 1.6 mm). To prevent the disc nut from unscrewing, it should be tack-welded or staked.

2. CTFE or PTFE SEAT *(Figure 8.1C)* If replacing a CTFE or PTFE seat, carefully unscrew the disc nut (16) from the disc. Remove washer (57) and soft seat (72B). Clean the piston disc soft seat area and disc post threads. Install a new CTFE or PTFE seat, replace washer, screw new self-locking nut with torque given in *Table 8.1.*

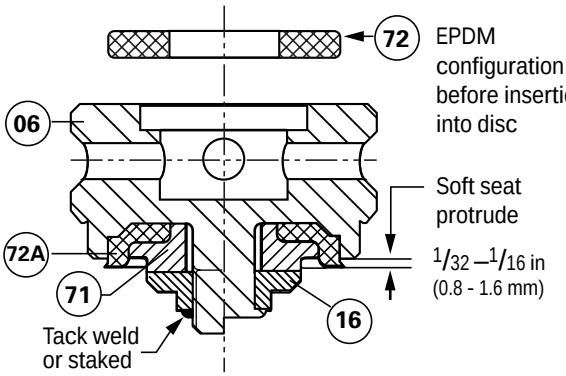

PARTS DESCRIPTION

06	- Disc	**71**	- Seat holder
16	- Disc nut	**72A**	- Soft seat EPDM

Figure 8.1A *Piston disc with a replaceable EPDM soft seat*

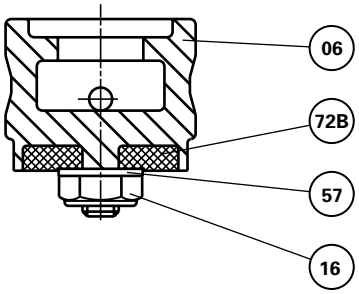

PARTS DESCRIPTION

06 - Disc
72B - Soft seat CTFE or PTFE
57 - Washer
16 - FUJILOK self-locking nut

Figure 8.1B *Piston disc with replaceable CTFE or PTFE soft seat*

Table 8.1 *Locking nut torques*

Size in	Size (mm)	Nut size	Torque lb·in	Torque (Nm)
½ – ¾	(15-20)	# 10 - 32 UNF	40	(4.5)
1	(25)	# 10 - 32 UNF	40	(4.5)
1¼ – 1½	(32-40)	¼ - 28 UNF	70	(7.9)
2	(50)	5⁄16 - 24 UNF	110	(12.4)

8.1.6 Fitting of Repaired Parts: Swing Check Valves

After the seating faces of the disc and seat have been relapped and cleaned with a suitable cleaning fluid, such as acetone or alcohol, the results of the lapping must be verified by a blueing test to check for full circumferential contact. A light coating of blueing ink should be distributed smoothly and equally over the seating surface of the disc. Slowly lower the disc with hanger into the body. Insert the hanger into the hanger seat hole, and match up with pin hole, while holding the disc away from seat insert the pin (61) slowly. Release the disc and press firmly against the seat. Remove the pin (61) *Figure 2.5B*. Pull out hanger with disc and check for positive contact.

8.2 DISASSEMBLY OF CHECK VALVES

8.2.1 General

Total disassembly: valve internal problems, spiral wound gasket, disc, etc.

CAUTION: Make sure all pressure has been relieved from both sides of the valve before starting disassembly work.

8.2.2 Disassembly of Small Bolted Cover Piston and Ball Check Valves

The disassembly instructions below cover all of Velan's small bolted cover piston (ball) check valves. As the general disassembly progresses, place matching marks on parts so that the same parts will be used at reassembly *(refer to Figures 8.2A and 8.2B)*.

1. Remove cover cap screws (nuts) (56).

   NOTE: If a valve has been in high-temperature service for extensive periods of time, the cap screws (nuts) may be seized to the body (studs). Tight nut threads can sometimes be loosened by applying penetrating oil or applying heat to the nut and working it free. As a last resort, a hacksaw, cutting torch or a cold chisel can be used to cut nut away from stud.

2. Once all the cap screws (nuts) are removed, the entire cover can be lifted off the valve body as shown in *Figures 8.2A and 8.2B.*
3. Remove used spiral wound gasket (19).
4. Lift spring (46) and piston disc or ball (06).
5. The valve is now ready for inspection and seat repairs.

6. During inspection, check the condition of the body-cover cap screws (studs) (56). Studs may have been damaged when removing seized nuts or when lifting the cover. If studs are damaged, remove and replace them as follows:

   a) Screw on two nuts.

   b) Lock the bottom nut to the top nut.

   c) Turn the bottom nut to remove the stud.

   d) Apply anti-seize compound to the new stud.

   e) Screw in the stud and tighten.

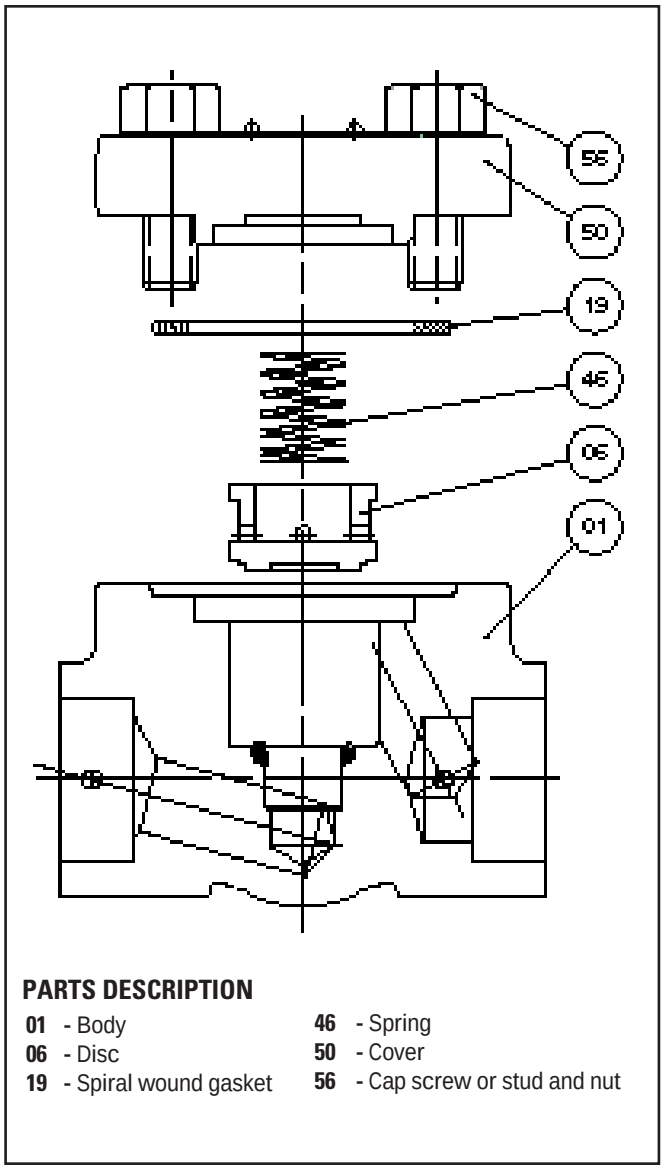

PARTS DESCRIPTION

01 - Body	**46** - Spring
06 - Disc	**50** - Cover
19 - Spiral wound gasket	**56** - Cap screw or stud and nut

Figure 8.2A *Bolted cover piston check valve exploded view*

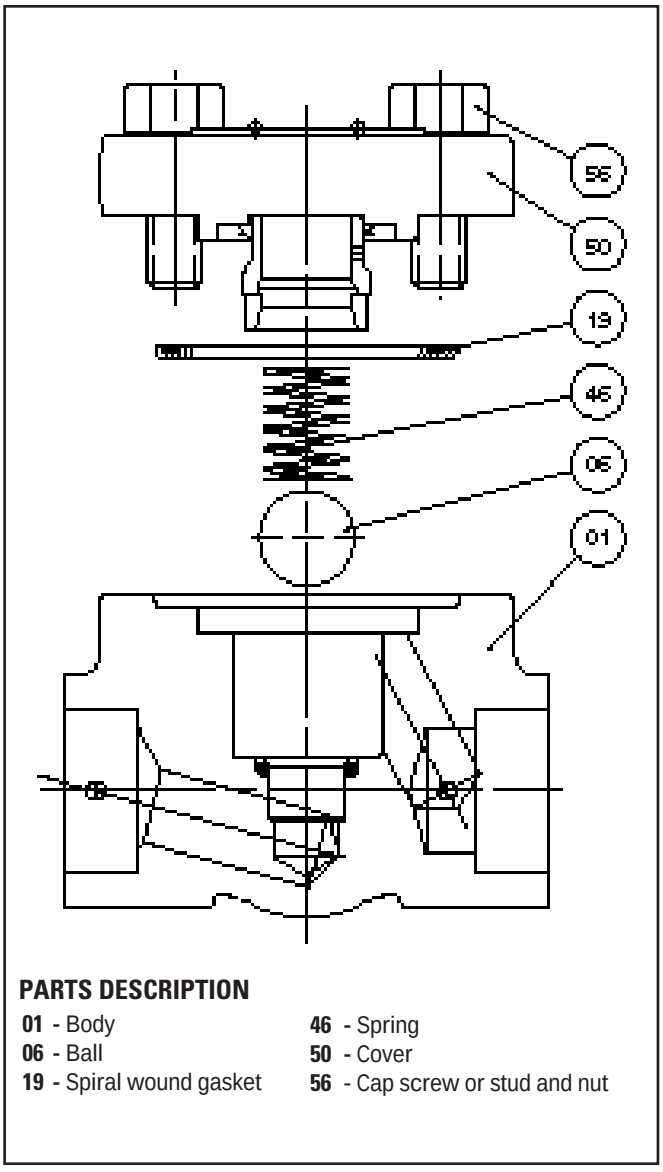

PARTS DESCRIPTION

01 - Body	**46** - Spring
06 - Ball	**50** - Cover
19 - Spiral wound gasket	**56** - Cap screw or stud and nut

Figure 8.2B *Bolted cover ball check valve exploded view*

8.2.3 Disassembly of Swing Check Valves

The disassembly instructions below cover all of Velan's small bolted cover swing check valves, as a general disassembly progresses follow *Section 8.2.2 para. 1, 2, and 3* , refer to *Figure 2.5B Swing check valve*.

4. Remove lock pin (61).

NOTE: It may be necessary to use a pair of pliers or vise grip and pull pin while twisting back and forth. With the pin removed, pull out hanger (51) together with the disc (08). Please note, it may be necessary to twist back and forth while pulling hanger/disc towards downstream. Once the hanger and disc have been removed from valve body, the disc and hanger can be disengaged by sliding out hinge pin (54).

5. The valve is now ready for inspection and seat-disc repairs.

6. During inspection, check the condition of the body-cover cap screws (studs) (56). Studs may have been damaged when removing seized nuts or when lifting the cover. If studs are damaged, remove and replace them as follows:

a) Screw on two nuts.

b) Lock the bottom nut to the top nut.

c) Turn the bottom nut to remove the stud.

d) Apply anti-seize compound to the new stud.

e) Screw in the stud and tighten.

8.3 REASSEMBLY OF CHECK VALVES

8.3.1 General

The reassembly procedures are not as detailed as the disassembly procedures since in most cases the reverse procedure is required.

1. The most important consideration is the cleanliness of all parts. Rust and dirt should be removed from all parts with a wire brush or emery cloth. Oil and grease should be removed with suitable solvents.

2. Threaded parts (cap screws, nuts, studs) must be well relubricated. Recommended lubricants can be found in *Table 4.2*.

3. Repaired or replaced parts must be checked to make sure that repair procedures have been done and that replaced parts (e.g., spiral wound gasket, etc.) have been checked for size so that they will fit into the valve you are servicing.

4. All orientation marks assigned during disassembly must be observed so that correct assembly is maintained.

8.3.2 Reassembly of Piston and Ball Check Valves

1. Install piston disc or ball (06) and spring (46) in valve.

2. Place new spiral wound gasket (19) in recess on top mounting face of body.

3. Line up the cover (50) with the body (01) and lower into the body. It is extremely important to prevent damage to the gasket when aligning the cover.

4. Apply recommended lubricant to body-cover cap screws (studs and nuts), and then install. Tighten body-cover cap screws (nuts) in strict accordance with the torque procedure found in *Section 5.2* and *Table 5.2* of this manual.

8.3.3 Reassembly of Swing Check Valves

Install disc (08) and hanger (51) with hinge pin (54) lower into body insert hanger into seat hanger hole and line up with pin hole. Insert pin (61) and proceed with body-cover reassembly. Follow *Section 8.3.2, paragraph 2, 3 and 4* to complete assembly.

9.1 WELDED BONNET GATE, GLOBE AND CHECK VALVES

Welded bonnet valves can be repacked and the top works serviced in the same way as bolted bonnet valves. However, the servicing of the seating faces or back seat can only be achieved by removing the bonnet assembly, which is threaded into the body and welded. This section provides a method for removing the bonnet without the necessity of cutting the valve from the line *(Figs. 9.1A, 9.1B and 9.1C)*.

9.1.1 Disassembly

When Velan welded bonnet valves are serviced because of a damaged seat or backseat, the weld between the body and the bonnet must be carefully cut off, using an electric hand grinder with a flat cutting wheel. Once the weld is removed, the bonnet can be unscrewed from the body.

Tight body-bonnet threads can sometimes be loosened by applying penetrating oil to threads and by tapping the side of the body using a mallet while unscrewing the bonnet. If valves have been in high temperature service for extensive periods of time, the bonnet may be seized to the body, and it may be necessary to heat the body and bonnet to free them.

Servicing of internal components is the same as for bolted bonnet valves, described in *Sections V to VII.*

9.1.2 Reassembly

Relap the seats and apply blueing ink to check final results. Then tightly thread the bonnet assembly into the body and weld the body-bonnet joint in accordance with an applicable Velan welding procedure.

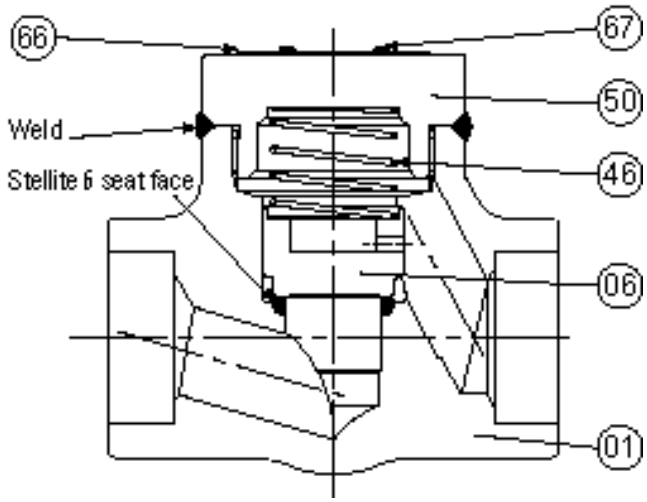

PARTS DESCRIPTION

01 - Body
06 - Disc
46 - Spring
50 - Cover
66 - Nameplate
67 - Rivet (or tack weld)

Figure 9.1A *Welded cover piston check*

IX WELDED BONNET VALVES

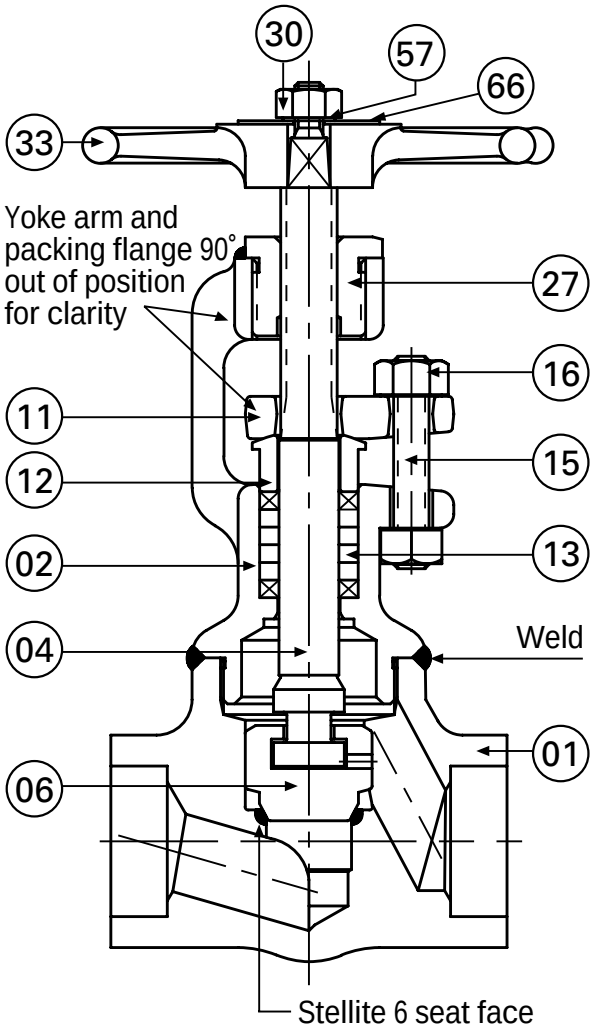

PARTS DESCRIPTION

01	- Body	**15**	- Gland stud
02	- Bonnet	**16**	- Gland nut
04	- Stem	**27**	- Yoke bushing
06	- Disc	**30**	- Handwheel nut
11	- Packing flange	**33**	- Handwheel
12	- Gland bushing	**57**	- Washer
13	- Packing ring	**66**	- Nameplate

Figure 9.1B *Welded bonnet globe valve*

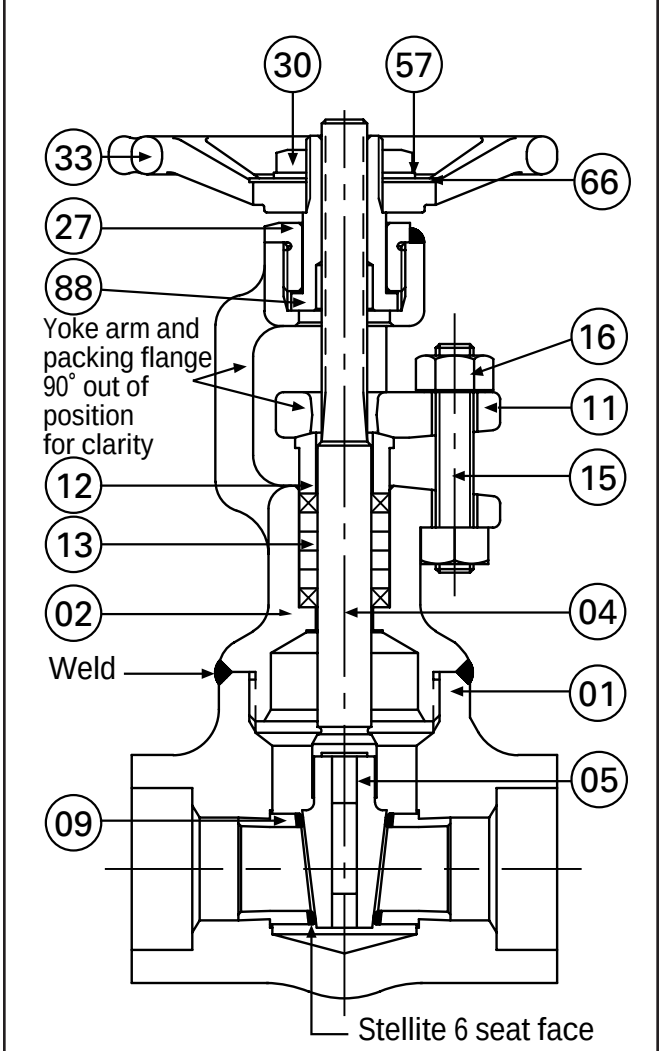

PARTS DESCRIPTION

01	- Body	**15**	- Gland stud
02	- Bonnet	**16**	- Gland nut
04	- Stem	**27**	- Yoke bushing
05	- Wedge	**30**	- Handwheel nut
09	- Seat	**33**	- Handwheel
11	- Packing flange	**57**	- Washer
12	- Gland bushing	**66**	- Nameplate
13	- Packing ring	**88**	- Stem nut

Figure 9.1C *Welded bonnet gate valve*

TERMS AND CONDITIONS OF SALE

CONTRACT: Orders are subject to acceptance by the Velan Companies hereinafter referred to as the seller. No terms or conditions of Purchaser's order contrary to the Seller's terms and condition shall be binding upon the Seller unless specifically agreed to by the Seller in writing.

MINIMUM ORDER CHARGE: $500.00 net.

PRICES: All quoted prices are subject to change by the seller without prior notice and, unless otherwise stipulated by Seller, are understood to be F.O.B. Seller's plant, with delivery to carrier constituting delivery to purchaser. Right to possession of the material to secure the payment of the purchase price shall remain in Seller until all payments therefore shall have been fully made. For the protection of the Purchaser and the Seller, verbal customer orders must be confirmed by a formal written purchase order. If a written purchase order is not received within ten days or a verbal order, product descriptions, quantities, specifications, etc., as set forth in Seller's acknowledgement and invoice shall be conclusive and binding on both parties. Any order that is shipped before receipt of confirmation which might have been entered incorrectly and would require remedial action would be for the Purchaser's account.

TAXES: All prices are exclusive of taxes. Sales, use and other taxes, by whomsoever levied, are to be paid by the Purchaser, and unless invoiced, are to be paid by the Purchaser directly to the appropriate governmental agency.

DELIVERY: Delivery or shipment specified is Seller's best estimate and Seller shall not be liable for delay in deliveries resulting from any cause whatsoever. Failure to ship on or near the estimated date shall not entitle Purchaser to cancel his order without charge.

RETURN OF MATERIALS: Materials may be returned only with prior written agreement of Seller.

CANCELLATION: Cancellation of orders may be made only with the Seller's written consent and Purchaser shall be subject to cancellation charges.

PRODUCT WARRANTY: Seller warrants the equipment of its own manufacture to be free of defects in material and workmanship, under normal use and proper operation for a period of one year from the date of shipment from Seller's plant. Seller's obligation under warranty shall be strictly limited, at Seller's option, to: *(i)* furnishing replacement parts for or repairing without charge to Purchaser, F.O.B. Seller's plant or *(ii)* issuing written authorization for Purchaser or others to replace or repair without charge to Purchaser, at costs comparable to Seller's normal manufacturing costs those parts proven defective, or (iii) in discharge of Seller's maximum liability herewith, refunding all monies paid by Purchaser to Seller for the Product and, at discretion of Seller, having the product removed and returned to Seller at Purchaser's expense. All transportation charges relative to corrective work, defective parts or replacement parts shall be borne by Purchaser. Purchaser shall give Seller immediate notice upon discovery of any defect. The undertaking of repairs or replacements by Purchaser or its agents without Seller's written consent shall relieve seller of all responsibility herewith.

Finished materials and accessories purchased from other manufacturers are warranted only to the extent of the manufacturer's warranty to Seller.

Any alteration in material or design of Seller's product or component parts thereof by Purchaser or others without written authorization by Seller voids all obligations of Seller regarding the product and any associated warranty herein stated or implied.

Seller's sole liability shall be exclusively as set forth herein, and Seller shall not be liable for any incidental or consequential damages due to its breach of any warranty herein contained, or otherwise. Without limitation to the foregoing, in no event shall Seller be liable for the loss of use of the product or of any other product, process, plant, equipment, or facilities of the Purchaser or end-user whether partially or wholly due to defects in material and/or workmanship and/or design of Seller's product, and in no event shall Seller be liable for removal of appurtenances or incidentals such as connections, pipe work and similar items of obstruction or for any cost brought about by the necessity of removing the product from its point of installation.

Seller makes no warranty of any kind whatsoever, expressed or implied, other then is specifically stated herein; and there are no warranties of merchantability and/or fitness for a particular purpose which exceed the obligations and warranties specifically stated herein.

Parts furnished without charge as replacements for original parts under warranty are warranted for that period of time during which the original parts warranty is effective.

ALL SHIPMENTS WILL BE F.O.B. PLANT LOCATION. SHIPMENTS WILL BE MADE VIA MOST ECONOMICAL CARRIERS UNLESS OTHERWISE REQUESTED.TERMS: NET 30 DAYS FROM DATE OF INVOICE: 1½% PER MONTH OF ALL OVERDUE ACCOUNTS, ALL TAXES EXTRA. PRICES SUBJECT TO CHANGE WITHOUT NOTICE.

MANUFACTURING PROGRAM

Valve Product Line	Size in	Size mm	Pressure Class	Applicable Specifications
Forged pressure seal and bolted bonnet gate, globe and check valves	2 – 24	50 – 600	PS: ASME 600 – 4500 BB: ASME 150 – 1500	ASME B16.34
Small forged steel gate, globe and check valves	¼ – 2	8 – 50	ASME 150 – 2500	API 602, 606 ASME B16.34
Forged steel Y-pattern globe valves	½ – 4	15 – 100	ASME 900 – 4500	ASME B16.34
Cast steel gate, globe and check valves	2 – 60	50 – 1500	ASME 150 – 1500	API 600
Cast stainless steel gate, globe and check valves	½ – 24	15 – 600	ASME 150 – 300	API 603 ASME B16.34
Twin flapper wafer check valves	2 – 72	50 – 1800	ASME 125 – 2500	API 594
All stainless steel knife gate valves	2 – 36	50 – 900	150 psi	TAPPI TIS 405-8 MSS SP-81
Memory seal ball valve	¼ – 24	8 – 600	ASME 150 – 600 600 – 4000 WOG	ASME B16.34
General purpose ball valve	¼ – 12	8 – 300	Up to 300	Up to ASME B16.34
Metal-seated ball valves	½ – 24	15 – 600	ASME 150 – 4500	ASME B16.34
Butterfly valves	3 – 36	80 – 900	ASME 150-300	API 609
Bellows seal gate and globe valves	½ – 12	15 – 300	ASME 150 – 2500	ASME B16.34
Cryogenic gate, globe, check, ball and butterfly valves	⅜ – 48	10 – 1150	ASME 150 – 1500	ASME B16.34

SALES OFFICES

U.S.A.

Don Bowers
94 Avenue C
Williston, VT
05495-9732
Tel: (802) 864-3350
Fax: (802) 865-3030

Paul R. Lee
105 Carriage Drive
Hockessin, DE
19707-1329
Tel: (302) 239-7114
Fax: (302) 239-7946

Tony Boland
45 W. Franklin Street
Bellbrook, OH
45305
Tel: (937) 848-2011
Fax: (937) 848-2144

E. Harlan Dunk
5409 Thornapple Ln.,
Acworth, GA
30101
Tel: (770) 590-0909
Fax: (770) 590-8144

Ronald J. Harrington
43 Wyckoff Avenue
Waldwick, NJ
07463-1721
Tel: (201) 670-0995
Fax: (201) 670-6810

Michael Midgley
3160 Vera Valley Drive
Franklin, TN
37064
Tel: (615) 599-5910
Fax: (615) 599-6949

Charles Pogue /
B. Lawson / T. Harfield /
M. Tilley
730 N. Post Oak Road
Suite 311
Houston, TX
77024
Tel: (713) 682-1084
Fax: (713) 682-6071

Christopher G. Hiett
21931 Harborbreeze Lane
Huntington Beach, CA
92646
Tel: (714) 965-6277
Fax: (714) 965-6737

John Flynn
289 Antioch Road
Lake Lure, NC
28746
Tel: (828) 625-9441
Fax: (828) 625-9437

Joe Denny
1638 Estate Circle
Naperville, IL
60565
Tel: (630) 579-1833
Fax: (630) 579-1834

David Brodnax
503 Comanche Trail
West Monroe, LA
71291
Tel.: (318) 396-7517
Fax: (318) 396-4995

CANADA

Paul Dion /
Jacques Godbout
7007 Côte de Liesse
Montreal, QC
H4T 1G2
Tel: (514) 748-7743
Fax: (514) 748-8635

George S. Lysakowski
871 Kowal Drive
Mississauga, ON
L5H 3T3
Tel: (905) 278-7522
Fax: (905) 278-8155

Bill Patrick
7127 - 56 Avenue
Edmonton, AB
T6B 3L2
Tel: (780) 465-1122
Fax: (780) 465-0403

Leo Shewchuk
17 Simcrest Manor S.W.
Calgary, AB
T3H 4K1
Tel: (403) 232-6482
Fax: (403) 686-6485

MEXICO, CENTRAL & SOUTH AMERICA

Sergio Pensotti
VELAN VALVE CORP.
730 N. Post Oak Road
Suite 311
Houston, TX
77024
Tel: (713) 682-1837
Fax: (713) 682-6071

EUROPE

Brian Hall
VELAN VALVES LTD.
Cambridge Rd.,
Whetstone
Leicester LE8 6LH
England
Tel: (44) 6-275-0206
Fax: (44) 6-275-0224

J.C. Cennac
VELAN S.A.S
90, rue Challemel Lacour
69367 Lyon Cedex 7
France
Tel: (33) 4-78-61-6700
Fax: (33) 4-78-72-1218

INDIA

S.Giridhar
B-708 Vardhaman
Apartments
Mayur Vihar-Phase 1
Delhi 110091 India
Tel: (91) 11-2271-2196
Fax: (91) 11-2275-3533

CHINA

Suite C-1705, Newtown
88 Jian Guo Road
Chaoyang District
Beijing, China 100022
Tel: (86) 10-8580 6196
Fax: (86) 10-8580 6199

JAPAN

Tak Sakamoto
4-31-3 Kamimeguro,
Meguro-ku , Tokyo
153-0051 Japan
Tel: (81) 3-3792-1891
Fax: (81) 3-3792-1891

AUSTRALIA

Jim Thanos
27 Beagle St.,
Mosman Park,
Western Australia 6012
Tel: (61) 8 9284-2255
Fax: (61) 8 9284-6314

DISTRIBUTION CENTERS & SALES OFFICES

U.S.A.

VELCAL
Dave Frolich
537 Stone Road, Unit "A"
Benicia, CA
94510
Tel: (707) 745-4507
Fax: (707) 745-4708

VELEAST
Scott Stewart
605 Commerce
Park Drive SE
Marietta, GA
30060
Tel: (770) 420-2010
Fax: (770) 420-7063

VELNORTH
Sean Meehan
94 Avenue C
Williston, VT
05495-9732
Tel: (802) 651-0867
Fax: (802) 865-3030

GERMANY

VELAN GmbH
Wolfgang Maar
Daimlerstrasse 8
D-47877 Willich
Tel: (49) 2154/4938-00
Fax: (49) 2154/4938-99

MANUFACTURING PLANTS

U.S.A.

VELAN VALVE CORPORATION
94 Avenue C
Williston, VT 05495-9732
Tel: (802) 863-2561
Fax: (802) 862-4014

ENGLAND

VELAN VALVES LTD.
Unit 1, Pinfold Road,
Lakeside Business Park,
Thurmaston, Leicester
LE4 8AS
England
Tel: 44-116 269-5172
Fax: 44-116 269-3695

FRANCE

VELAN S.A.S
90, rue Challemel Lacour
69367 Lyon Cedex 7
France
Tel: (33) 4-78-61-6700
Fax: (33) 4-78-72-1218

PORTUGAL

VELAN VÁLVULAS INDUSTRIAIS, LDA.
Av. Ary dos Santos
1679-018 Famoes
Portugal
Tel: (351-21) 934-7800
Fax: (351-21) 934-7809

ITALY

VELAN SRL
Via Delle Industrie 9/5
20050 Mezzago,
Tel: (39) 039 62-4111
Fax: (39) 039 688-3357

CANADA

VELAN INC.
7007 Côte de Liesse
Montreal, QC H4T 1G2
Tel: (514) 748-7743
Fax: (514) 748-8635

VELAN INC.
2125 Ward Avenue
Montreal, QC H4M 1T6
Tel: (514) 748-7743
Fax: (514) 748-7641

VELAN INC.
550 McArthur Ave.
Montreal, QC H4T 1X8
Tel: (514) 748-7743
Fax: (514) 341-3032

VELAN INC.
1010 Cowie Street
Granby, QC J2J 1E7
Tel: (450) 378-2305
Fax: (450) 378-6865

PROQUIP
835 Fourth Line
Oakville, ON L6L 5B8
Tel: (905) 842-1721
Fax: (905) 849-0923

KOREA

VELAN LTD.
1060-4 Shingil-Dong
Ansan City, Kyunggi-do
Korea 425-833
Tel: (82) 31-491-2811
Fax: (82) 31-491-2813

TAIWAN

VELAN-VALVAC
P.O. Box 2020
Taichung, Taiwan, R.O.C.
Tel: (04) 2792649
Fax: (886) 42750855

GENERAL INFORMATION

Tel: (514) 748-7743
Fax: (514) 748-8635
Web: http://www.velan.com

Velan's valve distributors are located worldwide.

PRINTED IN CANADA

VEL–SFVM–2004

INLINE BALL CHECK VALVES

Designed to handle the toughest service conditions in oil and gas production, our inline ball check valves are ruggedly constructed to provide years of trouble-free service.

CONSIDER THESE FEATURES:

- Metal to metal seating provides effective one-way control
- Full 316 stainless steel internals for process compatibility
- Low cracking pressure leads to reduced loss of flow
- Socket weld end connections available
- Size ranges ¼″ through 2″



STANDARD:

Pressure Range:	3000, 6000, 10,000 psi MAWP
Temperature Range:	+32ºF (0ºC) to +400ºF (+204ºC) - Carbon Steel -20ºF (-29ºC) to +400ºF (+204ºC) - 316 S.S
End Connections:	¼ inch through 1 ¼ inch NPT 1 ½ inch through 2 inch - Line Pipe
Body Material:	Carbon Steel and 316 Stainless Steel
Trim Materials:	316 Stainless Steel



NACE LOW TEMPERATURE:

• ABSA – CRN #0C2161.2 • ASME B16.34

Pressure Range:	1,500 ASME Class
Temperature Range:	-50ºF (-46ºC) to +400ºF (+204ºC)
End Connections:	¼ inch through 2 inch NPT, Female x Female
Body Material:	A350-LF2
Trim Materials:	316 Stainless Steel

SIZE	MODEL NUMBER	ARGUS PART NO.
1/4"	FFBAC-025	V1000001
3/8"	FFBAC-037	V1000002
1/2"	FFBAC-050	V1000003
3/4"	FFBAC-075	V1000004
1"	FFBAC-100	V1000005
1 1/4"	FFBAC-125	V1000006
1 1/2"	FFBAC-150	V1000007
2"	FFBAC-200	V1000008

STANDARD:

SIZE	CONNECTION	M.A.W.P	8620/1018 CARBON STEEL MODEL NO.	8620/1018 CARBON STEEL ARGUS PART NO.	316 STAINLESS STEEL MODEL NO.	316 STAINLESS STEEL ARGUS PART NO.
1/4"	F X F	3,000	FFBDL-025	C1100001	FFBDS-025	C1200001
	F X F	6,000	FFBFL-025	C2100001	FFBFS-025	C2200001
	F X F	10,000	FFBEL-025	C1300001	FFBES-025	C1400001
3/8"	F X F	3,000	FFBDL-037	C1100002	FFBDS-037	C1200002
	F X F	6,000	FFBFL-037	C2100002	FFBFS-037	C2200002
	F X F	10,000	FFBEL-037	C1300002	FFBES-037	C1400002
1/2"	F X F	3,000	FFBDL-050	C1100003	FFBDS-050	C1200003
	F X F	6,000	FFBFL-050	C2100003	FFBFS-050	C2200003
	F X F	10,000	FFBEL-050	C1300003	FFBES-050	C1400003
3/4"	F X F	3,000	FFBDL-075	C1100004	FFBDS-075	C1200004
	F X F	6,000	FFBFL-075	C2100004	FFBFS-075	C2200004
	F X F	10,000	FFBEL-075	C1300004	FFBES-075	C1400004
1"	F X F	3,000	FFBDL-100	C1100005	FFBDS-100	C1200005
	F X F	6,000	FFBFL-100	C2100005	FFBFS-100	C2200005
	F X F	10,000	FFBEL-100	C1300005	FFBES-100	C1400005
1 1/4"	F X F	3,000	FFBDL-125	C1100006	FFBDS-125	C1200006
	F X F	6,000	FFBFL-125	C2100006	FFBFS-125	C2200006
	F X F	10,000	FFBEL-125	C1300006	FFBES-125	C1400006
1 1/2"	F X F	3,000	FFBDL-150	C1100007	FFBDS-150	C1200007
	F X F	6,000	FFBFL-150	C2100007	FFBFS-150	C2200007
	F X F	10,000	FFBEL-150	C1300007	FFBES-150	C1400007
2"	F X F	3,000	FFBDL-200	C1100008	FFBDS-200	C1200008
	F X F	6,000	FFBFL-200	C2100008	FFBFS-200	C2200008
	F X F	10,000	FFBEL-200	C1300008	FFBES-200	C1400008
	M x M	3,000	MMBDL-201	C1100028	MMBDS-201	C1200028



ARGUS MACHINE CO. LTD.

HOUSTON

12623 Duncan Rd, Suite I
Houston, Texas 77066
Phone: (281) 781-8581

5820-97th Street Edmonton, AB Canada T6E 3J1
Phone: (780) 434-9451
Toll Free: 1888-434-9451

www.argusmachine.com

CALGARY

1450, 540 – 5th Avenue SW
Calgary, AB T2P 0M2
Phone: (403) 263-3517

© Copyright 2011 Argus Machine Co. Ltd.

**design specifications subject to change without prior notice*

ANDERSON GREENWOOD
INSTRUMENTATION PRODUCTS

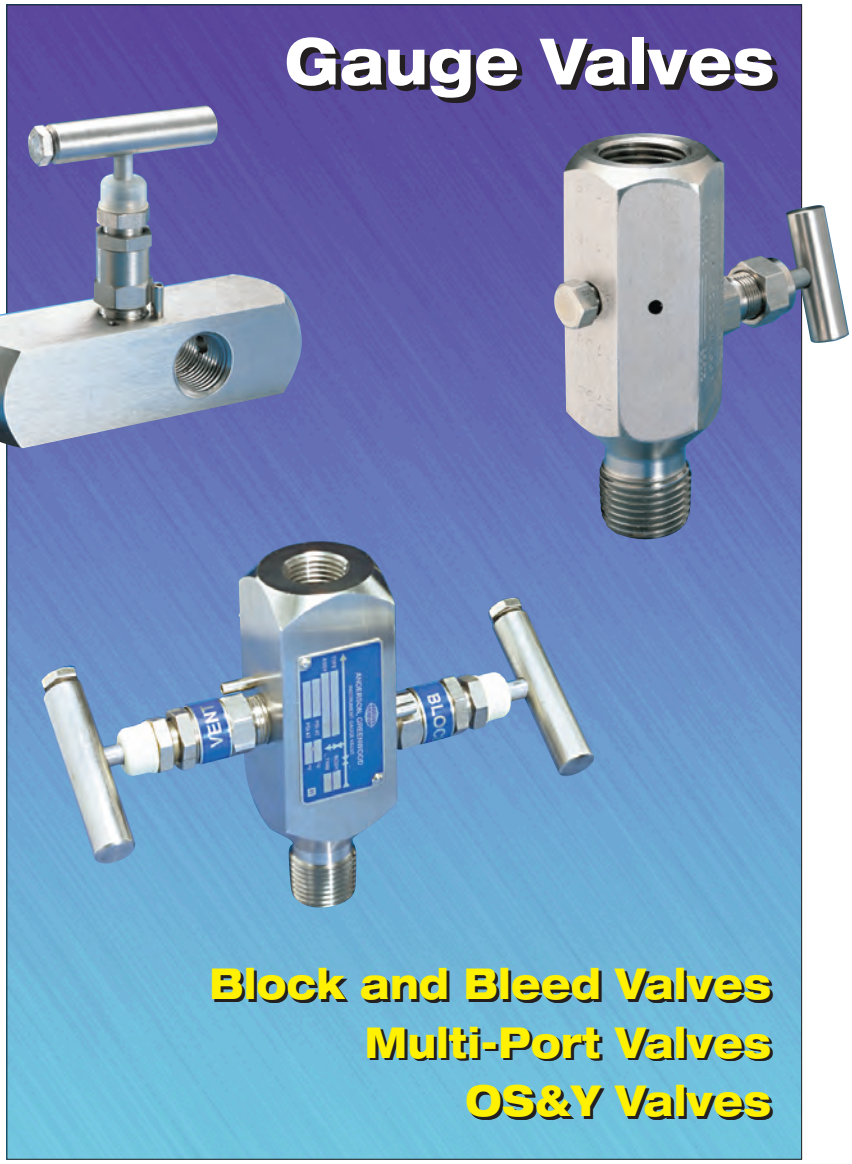

Anderson Greenwood is the industry leader in instrument valve technology and the original innovator of the 3-valve manifold. Our capabilities include over 50 years of research, design and manufacture of instrumentation products. Our products are designed to be maintenance free, and are offered with numerous configurations, materials, end connections and special requirements.

PENTAIR VALVES & CONTROLS

Contents

Bonnet Technology

Bonnet Assemblies . . . . . 1 - 2

Block and Bleed Valve

M9 Gauge Valve

Product Overview - Features and Benefits 3
Dimensions 4
Materials, Pressure/Temperature Ratings 5
Ordering Information 6

M25 and M251 Gauge Valves

Product Overview - Features and Benefits 7
Dimensions 8
Materials, Pressure/Temperature Ratings 9
Ordering Information . . . . . 10 - 11

Multi-Port Valves

M5 and M51 Gauge Valves

Product Overview - Features and Benefits 12
Dimensions 13
Materials 14
Pressure/Temperature Ratings 15
Ordering Information . . . . . 16 -19

M5A Gauge Valve

Product Overview - Features and Benefits 20
Dimensions, Materials 21
Pressure/Temperature Ratings 22
Ordering Information . . . . . 23 - 24

M5F Multi-Port Gauge Valve

Product Overview - Features and Benefits 25
Dimensions, Materials 26
Pressure/Temperature Ratings, Ordering Information 27

Copyright © 2013 Pentair. All rights reserved.

OS&Y Root Valves

M5K, M5AK, M5YK Gauge Valves
Product Overview - Features and Benefits 28

M5K Gauge Valve
Dimensions 29
Materials, Pressure/Temperature Ratings . . . . . 30 - 31
Ordering Information . . . . . 32 - 33

M5AK Gauge Valve
Dimensions, Materials 34
Pressure/Temperature Ratings 35
Ordering Information . . . . . 36 - 37

M5YK Gauge Valve
Dimensions, Materials 38
Pressure/Temperature Ratings 39
Ordering Information 40

Accessories

Bleed Tee
Product Overview - Features and Benefits 41
Dimensions, Materials 42
Pressure/Temperature Ratings, Ordering Information 43

V6 Bleeder Valve 44

VA Bleed Plug 44

Seat Resurfacing Tool 45

Bonnet Lock 45

Gauge Adapter 45

Gauge Syphon 45

Rod-out Device . . . . . 46 - 47

Copyright © 2013 Pentair. All rights reserved.

Bonnet Technology

Soft-Seated Bonnet Assembly

The soft-seated bonnet assembly has a one-piece rotating stem and plug. The stem threads are rolled and lubricated to prevent galling and reduce operating torque. Available with a patented PTFE packing gland, which is adjustable in service, or with a Viton® O-ring and PTFE back-up ring. A protective dust cap is fitted to contain stem lubricant and prevent the influx of contaminants. The standard hand valves have either $^{3}/_{16}$-inch [4.8 mm] or $^{1}/_{4}$-inch [6.4 mm] diameter orifice size. All bonnets are assembled with a bonnet locking pin to prevent accidental removal while in service.

Metal-Seated Bonnet Assembly

The metal-seated bonnet assembly has a rotating stem with free swivel ball-type seat for long service life. The stem threads are rolled and lubricated to prevent galling and reduce operating torque. The stem seal is a patented PTFE packing gland which is adjustable in service. A protective dust cap is fitted to contain stem lubricant and prevent the influx of contaminants. The specially hardened ball seat is ideal for both gas and liquid service. All bonnets are assembled with a bonnet locking pin to prevent accidental removal while in service.

The 10,000 psig [689 barg] bonnet assembly uses a strengthened stem and bonnet. The stem seal is a patented PTFE packing gland which is adjustable in service. A protective dust cap is fitted to contain stem lubricant and prevent the influx of contaminants. This bonnet is also fitted with a larger size T-bar handle.

The high-temperature bonnet assemblies utilizes a similarly designed stem and bonnet, and incorporates adjustable GRAFOIL® O-rings and back-up pressure rings to ensure a leak-free stem seal.

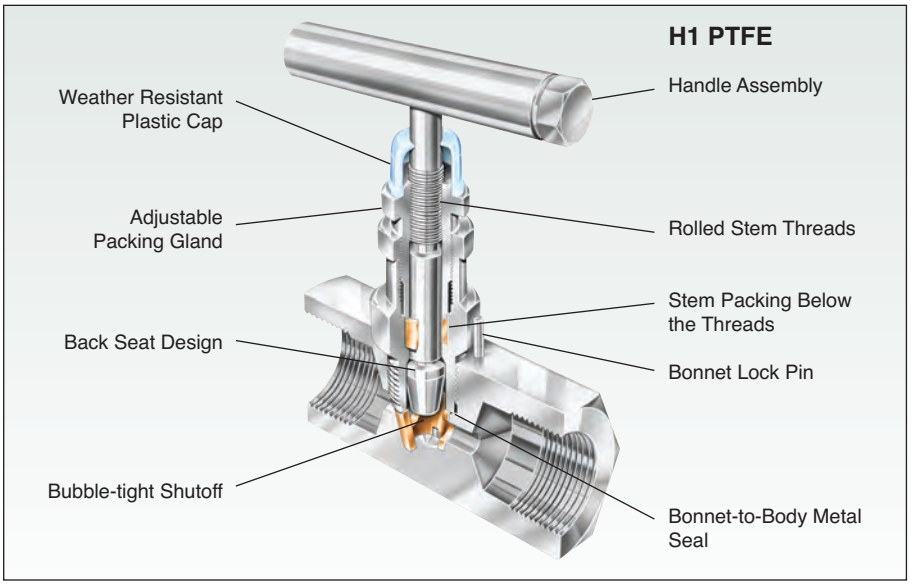

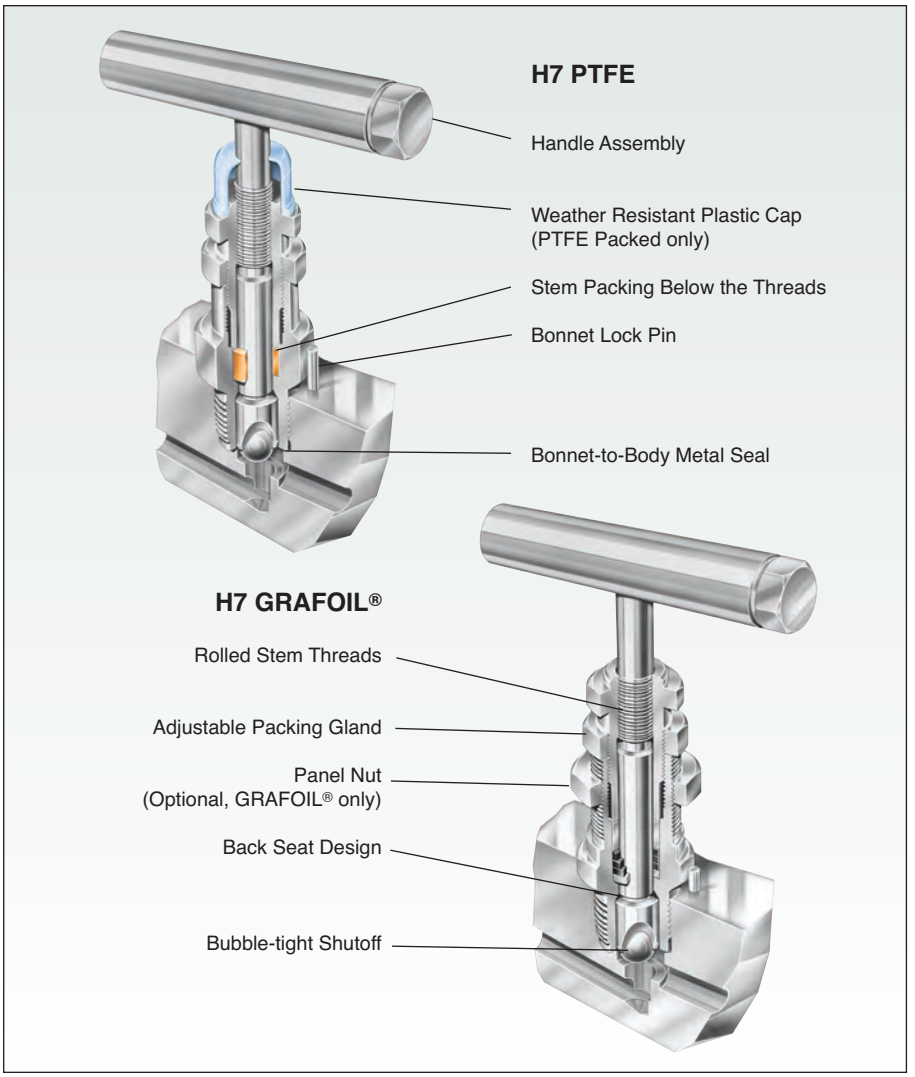

Notes

1. Viton® is a registered trademark of E.I. duPont de Nemours and Company.
2. GRAFOIL® is a registered trademark of Graftech, Inc.

Copyright © 2013 Pentair. All rights reserved.

Bonnet Technology, continued

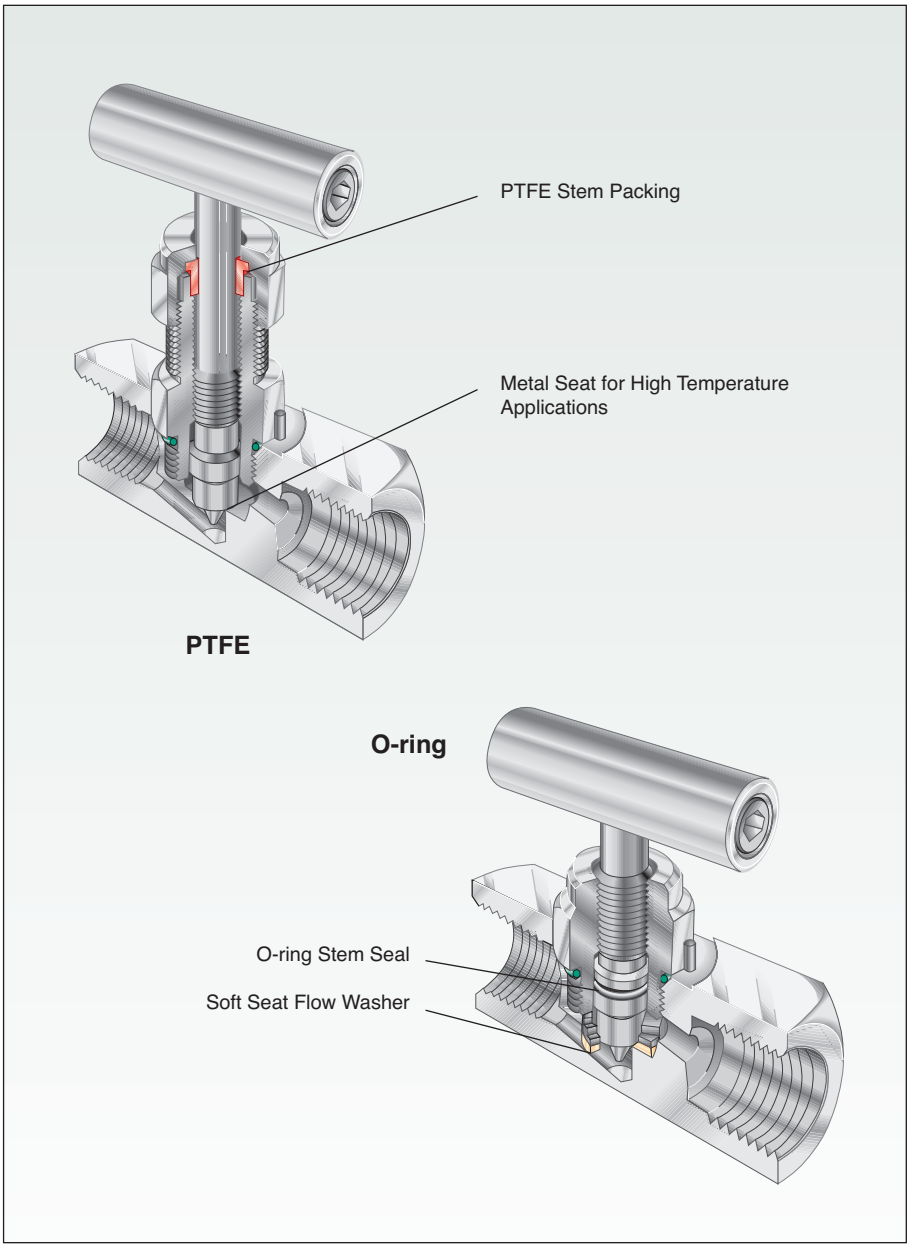

Mini-Valve Bonnet Assembly

The mini-valve bonnet assembly has a compact design with a one-piece rotating stem which is 'V' tipped with a shoulder for use as a metal or soft seated valve. The stem threads are rolled and lubricated to prevent galling and reduce operating torque.

The mini-valve bonnet comes in three designs. An adjustable PTFE stem packed bonnet is suitable for panel mounting via external bonnet threads. The O-ring bonnet assemblies use a Viton® O-ring seal below the stem thread.

A GRAFOIL® packed bonnet suitable for temperatures of up to 500°F [260°C] is available for SS valves only.

Arctic Lube

The low temperature rating for standard Anderson Greenwood carbon steel and 316 stainless steel instrumentation products is -20°F [-28°C] (standard products - standard lubrication). Our –AL (Arctic Lube) option extends the lower temperature limit to -70°F [-57°C] on all stainless steel models.

Copyright © 2013 Pentair. All rights reserved.

Block and Bleed Gauge Valve – M9

Product Overview

The M9 (block and bleed) gauge valve is specifically designed to facilitate safe, compact, and economical gauge installation and operation.

Block valve seating is interchangeable between 'hard' or 'soft' without changing the bonnet assembly. This feature enhances the value of the M9 by extending the useful life of the valve.

The M9's Bleed Plug is integral and employs metal-to-metal seating. It enables pressure to be safely vented without breaking threaded connections.

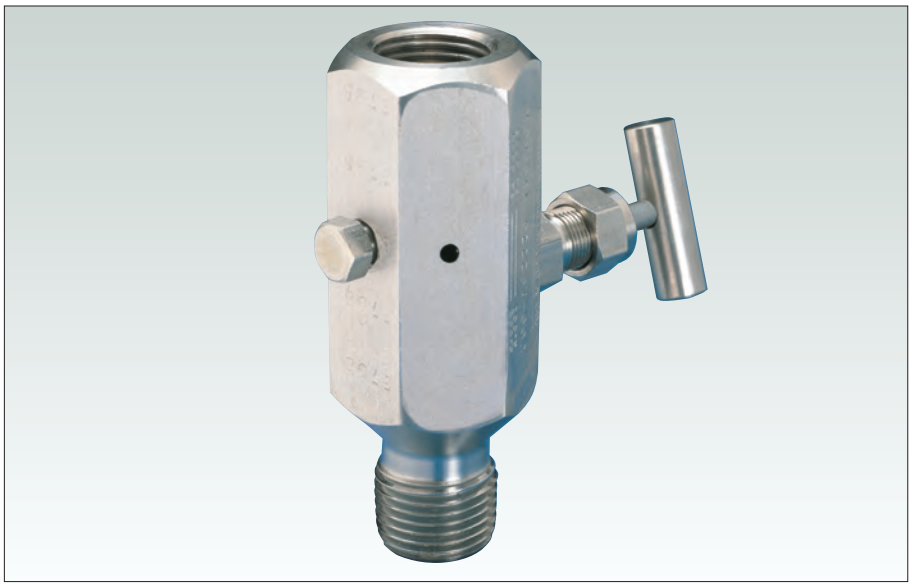

Applications

Static pressure gauge and instrument installation for isolation and venting.

Features and Benefits

- **Packing below threads (O-ring bonnet)** prevents lubricant washout, thread corrosion, and keeps solids from entering thread area, which can cause galling. It also prevents process contamination.
- **Adjustable packing** – Teflon® and GRAFOIL® packed bonnets adjust easily, decreasing packing replacement downtime and increasing valve life.
- **Safety back seating** prevents stem blowout or accidental removal while in operation and provides a metal-to-metal secondary stem seal while in the full open position.
- **Chrome plating of 316 SS stem** prevents galling or freezing of stem threads when similar metals mate. CS valves use a 303 SS stem.
- **Rolled threads** provide additional thread strength. The stem, bonnet, and male NPT threads are rolled, not cut.
- **Mirror stem finish** burnished to a 16 RMS finish in the packing area enabling smooth stem operation and extending packing life.
- **One-piece handle design** prevents loss of the valve handle due to vibration or during maintenance.
- **Soft or metal seat for bubble-tight shutoff** is field replaceable for easy maintenance.
- **Extended valve life** – if soft seat becomes damaged it can be removed, leaving a metal seated valve.

Note

1. Teflon® is a registered trademark of E.I. duPont de Nemours and Company.

Copyright © 2013 Pentair. All rights reserved.

Block and Bleed Gauge Valve – M9 Specifications[4]

M9RIS – 44 Dimensions with O-ring Bonnet[1], inches [mm]

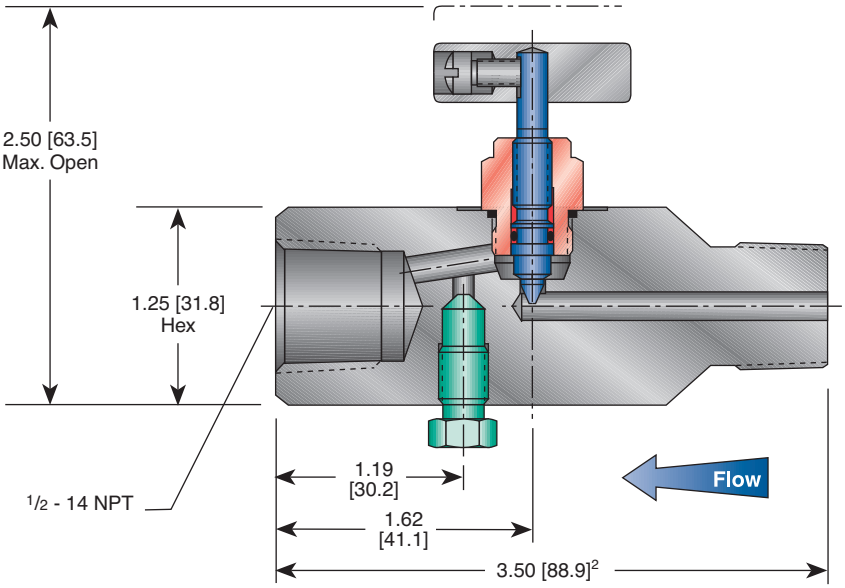

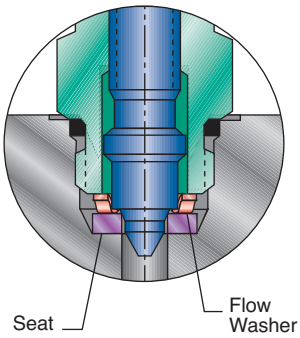

Optional Soft Seat

M9VIS – 4M Dimensions with Teflon® Bonnet[1], inches [mm]

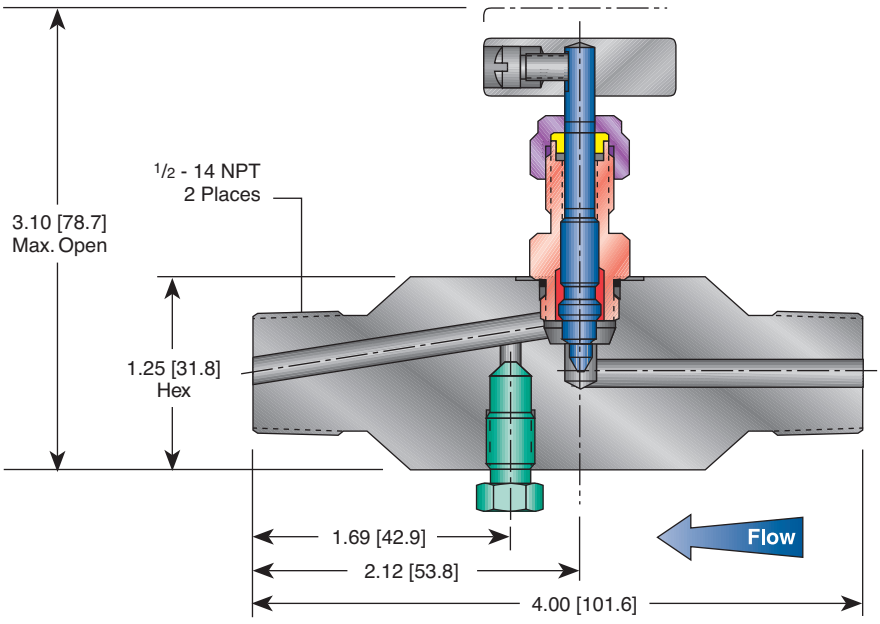

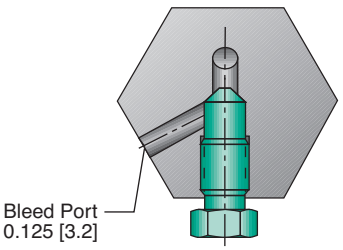

Section Through Bleed Plug

Notes

1. Bonnets interchangeable between all body configurations.
2. 4.00-inch [101.6 mm] for -44C, -46C.
3. M9( )–4 body length 2.88-inch [73.2 mm].
4. For Hastelloy® and SG3 call factory for dimensions and weights.
5. Hastelloy® is a registered trademark of Haynes International.

Copyright © 2013 Pentair. All rights reserved.

Block and Bleed Gauge Valve – M9 Specifications

Standard Materials

Metal Seat

Valve[1]	Body	Bonnet	Stem	Packing	Bleed Plug	Seat
CS[2]	A108 CS	A108 CS	A581-303 SS	Teflon® or BUNA-N O-ring	A108 CS	Integral
SS	A479-316 SS	A479-316 SS	A276-316 SS	Teflon®, BUNA-N O-ring or GRAFOIL®	A276-316 SS	Integral
SG[3]	A479-316 SS	A479-316 SS	Monel® 400	Teflon®	A279-316 SS	Integral
Monel®	Monel® R405	Monel® R405	Monel® R405	Teflon®	Monel® R405	Integral
SG3[8]	Hastelloy® C-276	Hastelloy® C-276	Hastelloy® C-276	Teflon®	Hastelloy® C-276	Integral

Soft Seat

Valve[1]	Body	Bonnet	Stem	Packing	Flow Washer	Bleed Plug	Seat[4]
CS[2]	A108 CS	A108 CS	A581-303 SS	Teflon® or BUNA-N O-ring	316 SS	A108 CS	Delrin®
SS	A479-316 SS	A479-316 SS	A276-316 SS	Teflon® or Viton® O-ring	316 SS	A276-316 SS	PCTFE[5]
SG[2]	A479-316 SS	A479-316 SS	Monel® 400	Teflon®	316 SS	A276-316 SS	PCTFE[5]
SG3[8]	Hastelloy® C-276	Hastelloy® C-276	Hastelloy® C-276	Teflon®	Hastelloy® C-276	Hastelloy® C-276	PCTFE[5]

Notes

1. Approximate valve weight 1.2 lb [.54 kg].
   Orifice size 0.136-inch [3.5 mm] diameter.
   Valve C_V Hard Seat 0.25 maximum. Valve C_V Soft Seat 0.24 maximum.
2. CS is zinc-cobalt plated to prevent corrosion (except male plain end is black oxide coated).
3. SG (Sour Gas) meets the requirements of NACE MR0175/ISO 15156-3 Corrigendum 2 (for Chloride conditions ≤ 50 mg/l [ppm]) and NACE MR0103-2005.
4. PEEK available.
5. PCTFE (Polychlorotrifluoroethylene) is the exact equivalent of Kel-F®.
6. Kel-F®, Viton® and Delrin® are registered trademarks of E.I. duPont de Nemours and Company.
7. Monel® is a registered trademark of the Special Metals Corporation.
8. SG3 (Sour Gas) meets the requirements of NACE MR0175/ISO 15156-3 Corrigendum 2 (for Chloride conditions > 50 mg/l [ppm]).

Pressure and Temperature Ratings

Ratings with Teflon® or GRAFOIL® Bonnet

Hard Seat	6000 psig @ 200°F [414 barg @ 93°C] 4000 psig @ 500°F [276 barg @ 260°C]
Delrin® and PCTFE[5]	3000 psig @ 200°F [207 barg @ 93°C]
PEEK Seat	6000 psig @ 200°F [414 barg @ 93°C] 3000 psig @ 300°F [207 barg @ 149°C]

Ratings with O-ring Bonnet

Hard Seat	6000 psig @ 200°F [414 barg @ 93°C]
Delrin® and PCTFE[5]	3000 psig @ 200°F [207 barg @ 93°C]
PEEK Seat	6000 psig @ 200°F [414 barg @ 93°C]

Pressure vs. Temperature

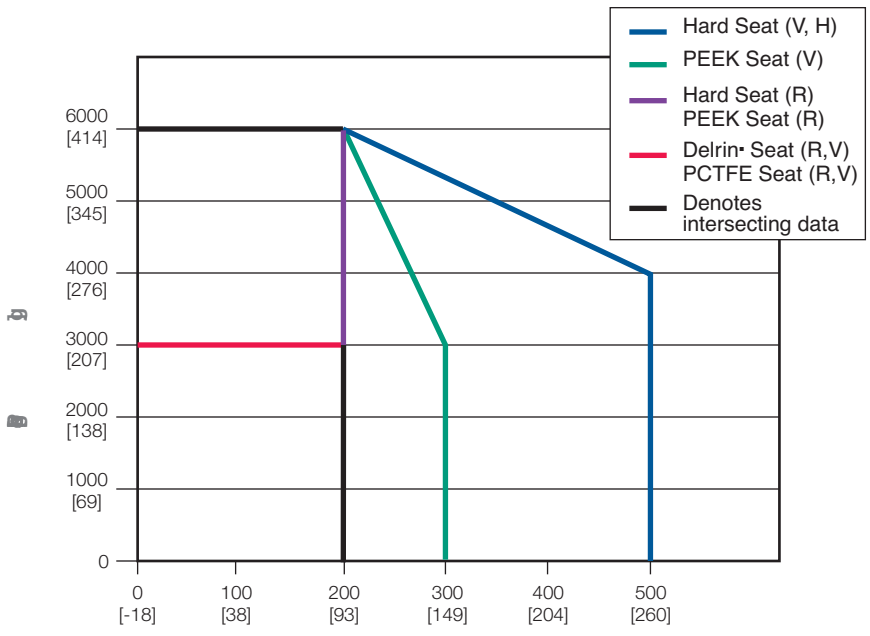

(V) = with Teflon® Bonnet Assembly
(R) = with O-ring Bonnet Assembly
(H) = with GRAFOIL® Bonnet Assembly

Copyright © 2013 Pentair. All rights reserved.

Block and Bleed Gauge Valve – M9 Specifications

Ordering Information

M9 V I S – 44C – SG

Packing

V – Teflon® Bonnet (standard for 316 SS)
R – O-ring Bonnet
H – GRAFOIL® (500°F [260°C] max)

Seat

I – Integral
D – Delrin® (standard)
E – PEEK
K – PCTFE[1]

Body Materials

C – CS
S – SS
M – Monel®
J – Hastelloy®

Connections (Inlet/Outlet)

44 – 1/2-inch MNPT x 1/2-inch FNPT
46 – 3/4-inch MNPT x 1/2-inch FNPT
4M – 1/2-inch MNPT x 1/2-inch MNPT
4 – 1/2-inch FNPT x 1/2-inch FNPT

C – Male plain end (CS is black oxide coated)

Options

AL – Arctic Lubricant (Low Temperature Service) Not available for CS valves.
CL – Chlorine Cleaning
HD – Hydrostatic Testing (100%) (MSS SP-61)
MS – Monel® Stem
OC – Oxygen Cleaning
PHB – Phenolic Black Handle
PHG – Phenolic Green Handle
PHR – Phenolic Red Handle
PM – Panel Mount (Teflon® packed only)
SG – (Sour Gas) meets the requirements of NACE MR0175/ISO 15156-3 Corrigendum 2 (for Chloride conditions ≤ 50 mg/l [ppm]) and NACE MR0103-2005. (SS only); (Teflon® packed only)
SG3 – (Sour Gas) meets the requirements of NACE MR0175/ISO 15156-3 Corrigendum 2 (for Chloride conditions > 50 mg/l [ppm])
SP – Special Requirements - please specify

Note

1. PCTFE (Polychlorotrifluoroethylene) is the exact equivalent of Kel-F®.

Copyright © 2013 Pentair. All rights reserved.

Block and Bleed Gauge Valves – M25 and M251

Product Overview

The M25 and M251 are two-valve single outlet gauge valves that combine isolating, calibrating, and venting facilities in a single compact unit. These valves enable gauges, pressure transmitters, or switches to be reliably installed and serviced, by reducing potential leak points.

The vent port is threaded 1/4-inch NPT on all valves and is fitted with a plug. This facilitates installation of exhaust piping/tubing on hazardous services, which in turn contributes to operator safety.

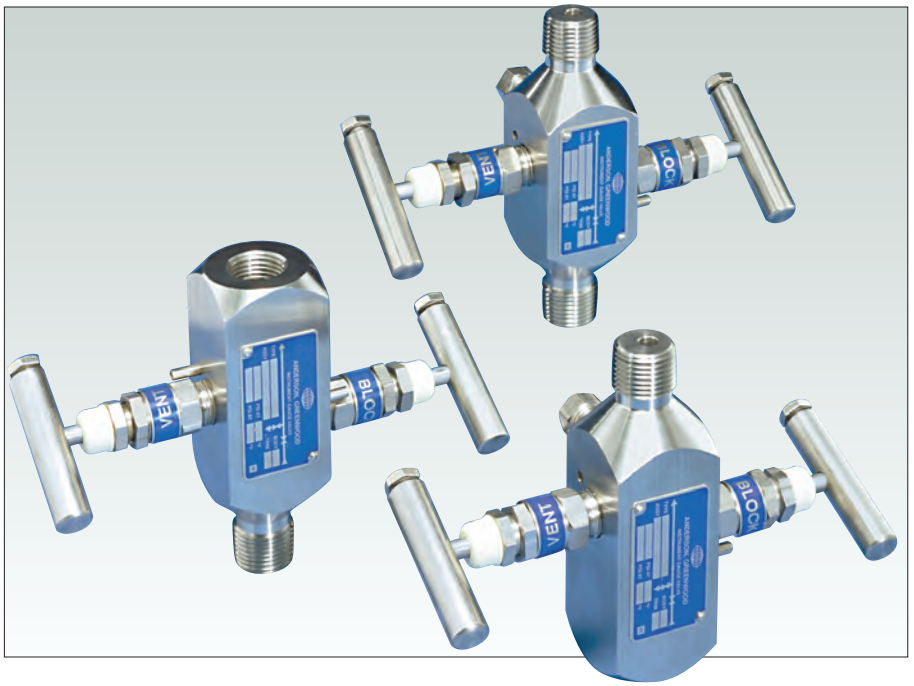

Features and Benefits

- **Compact design** requires minimum space for operation and installation. Lower valve weight increases strength at the process connection and reduces gauge whip.
- **Cost savings** from reduced number of components required for instrument installation, also decreases possible leak points.
- **Easy instrument check calibration** using 1/4-inch FNPT vent/test port.
- **Ball end stem** eliminates seat galling, provides bubble-tight shutoff and long life. The hardened, non-rotating ball ensures perfect alignment closure.
- **Packing below threads** prevents lubricant washout, thread corrosion, and keeps solids from entering the thread area, which can cause galling. It also prevents process contamination.
- **Adjustable packing** adjusts easily – loosen jam nut, tighten bushing slightly, then retighten jam nut. Decreases packing replacement downtime and increases valve life.
- **Safety back seating** prevents stem blowout or accidental removal while in operation and provides a metal-to-metal secondary stem seal while in the full open position.
- **Dust cover** prevents lubricant washout and keeps contaminants (dirt, rain, etc.) out of bonnet assembly.
- **Panel mount** (optional) affords opportunity to use high quality products in racks or panels.
- **Chrome plating of 316 SS** prevents galling or freezing of stem threads when similar metals mate. CS valves use a 303 SS stem.
- **Rolled threads** provide additional thread strength. The stem, bonnet, and male NPT threads are rolled, not cut.
- **Mirror stem finish** burnished to a 16 RMS finish in the packing area enables smooth stem operation and extends packing life.
- **Body-to-bonnet seal** is metal-to-metal in constant compression, isolating the bonnet threads from process fluid corrosion. Eliminates possible tensile breakage of bonnet, and gives a reliable seal point.
- **Bonnet lock pin** is another safety feature which prevents the accidental separation of the bonnet from the body. However, normal valve maintenance and repair are still easily accomplished.

Copyright © 2013 Pentair. All rights reserved.

Block and Bleed Gauge Valves – M25 and M251 Specifications

Dimensions, inches [mm]

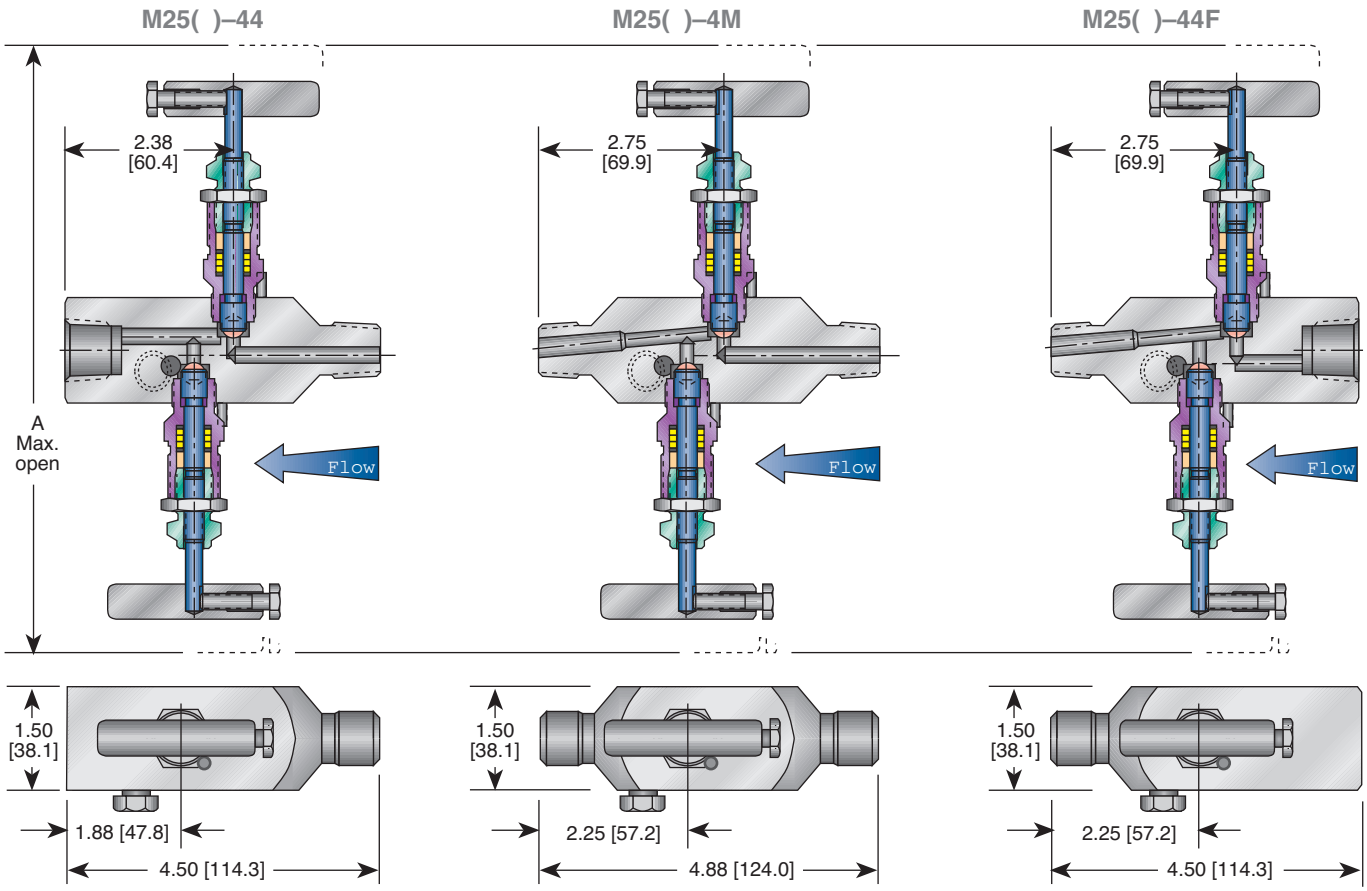

Standard Materials

Valve	Body	Bonnet	Stem	Ball	Packing
CS[1]	A105 CS	A108 CS	A581-303 SS	17-4 PH	Teflon®
CS[1]	A105 CS	A105 CS	A581-303 SS	17-4 PH	GRAFOIL® Low Emissions Graphite
SS	A479-316 SS	A479-316 SS	A276-316 SS	316 SS	Teflon®
SS	A479-316 SS	A479-316 SS	A276-316 SS	316 SS	GRAFOIL® Low Emissions Graphite
SG[2]	A479-316 SS	A479-316 SS	Monel® 400	Monel® K500	Teflon®
SG[2]	A479-316 SS	A479-316 SS	Monel® 400	Monel® K500	GRAFOIL® Low Emissions Graphite
SG3[3]	Hastelloy® C-276	Hastelloy® C-276	Hastelloy® C-276	Elgiloy®	Teflon®
SG3[3]	Hastelloy® C-276	Hastelloy® C-276	Hastelloy® C-276	Elgiloy®	GRAFOIL® Low Emissions Graphite

Notes

1. CS is zinc-cobalt plated to prevent corrosion.
2. SG (Sour Gas) meets the requirements of NACE MR0175/ISO 15156-3 Corrigendum 2 (for Chloride conditions ≤ 50 mg/l [ppm]) and NACE MR0103-2005.
3. SG3 (Sour Gas) meets the requirements of NACE MR0175/ISO 15156-3 Corrigendum 2 (for Chloride conditions > 50 mg/l [ppm]).

Pressure and Temperature Ratings

Teflon® Packing

CS, SS	6000 psig @ 200°F [414 barg @ 93°C]	4000 psig @ 500°F [276 barg @ 260°C]
316L SS	5000 psig @ 200°F [345 barg @ 93°C]	
SG, SG3	6000 psig @ 200°F [414 barg @ 93°C]	4000 psig @ 500°F [276 barg @ 260°C]

GRAFOIL® and Low Emissions Graphite Packing

CS	6000 psig @ 200°F [414 barg @ 93°C]	1500 psig @ 850°F [103 barg @ 454°C]
316L SS	5000 psig @ 200°F [345 barg @ 93°C]	
SS, SG, SG3	6000 psig @ 200°F [414 barg @ 93°C]	1500 psig @ 1000°F [103 barg @ 538°C]

Copyright © 2013 Pentair. All rights reserved.

Block and Bleed Gauge Valves – M25 and M251 Specifications

Dimensions, inches [mm]

Packing	A
Low Emissions (E) GRAFOIL® (H)	8.14 [206.8]
Teflon® (V) M251 only	6.84 [173.7]

Notes

1. Approximate valve weight M25( )–44 and M25( )–44F 3.6 lb [1.63 kg].
   M25( )–4M 3.8 lb [1.72 kg].
   Valve C_V 0.52 maximum.
2. For Hastelloy® and SG3 call factory for dimensions and weights.

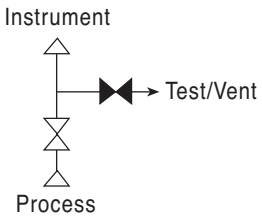

Dimensions, inches [mm]

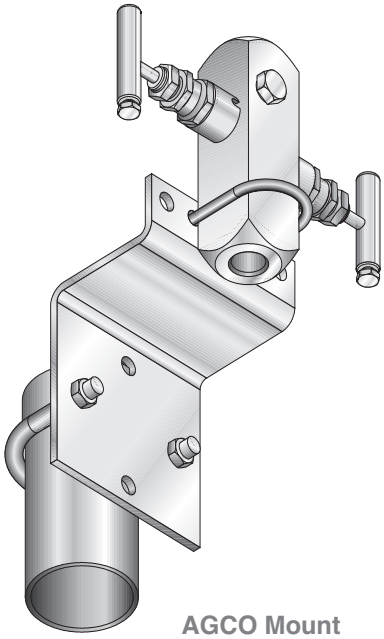

AGCO Mount

M25( )–4

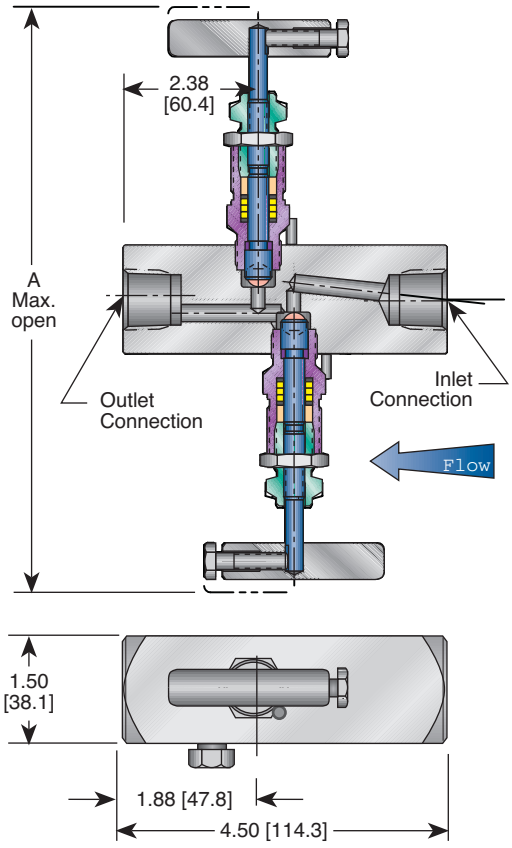

Pressure vs. Temperature – M25

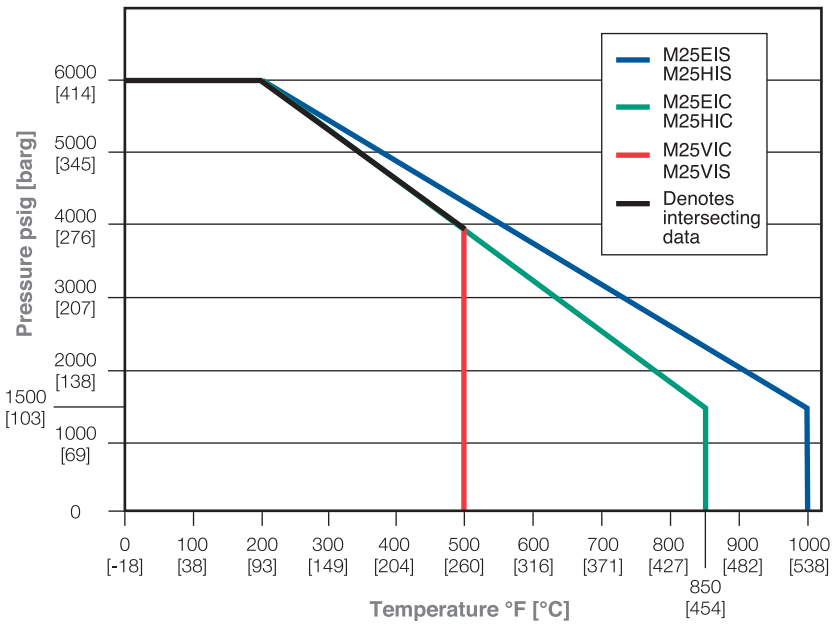

Pressure vs. Temperature – M251

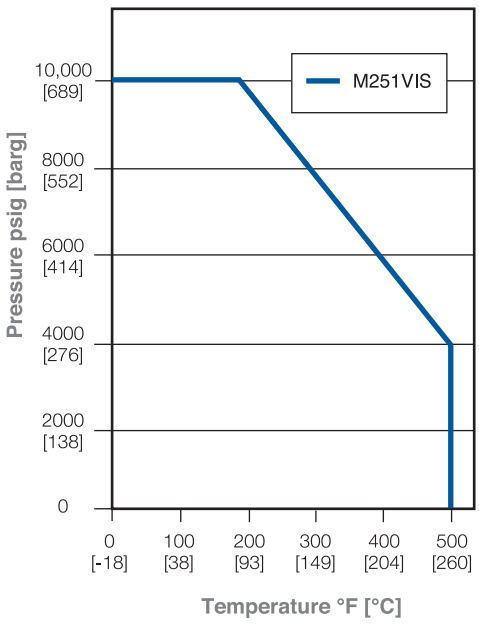

Copyright © 2013 Pentair. All rights reserved.

Block and Bleed Gauge Valves – M25 and M251 Specifications

Ordering Information

M25 V I S – 44C – SG

Model Number

M25, M251

Packing

V – Teflon®
H – GRAFOIL®
E – Low Emissions Graphite

Seat Material

I – Integral

Body Material[1]

C – CS
S – 316 SS
M – Monel®
J – Hastelloy®
W – 316L SS (maximum pressure 5,000 psig [345 barg] @ 200°F [93°C]

Connections (Inlet/Outlet)[2]

4M – 1/2-inch MNPT x 1/2-inch MNPT
44 – 1/2-inch MNPT x 1/2-inch FNPT
44F – 1/2-inch FNPT x 1/2-inch MNPT
46 – 3/4-inch MNPT x 1/2-inch FNPT
4 – 1/2-inch FNPT x 1/2-inch FNPT (body length 4 1/2-inch [114.5 mm])

C – Male plain end (CS is black oxide coated)

Options

AL – Arctic Lubricant (Low Temperature Service) - not available for CS valves
AM – AGCO Mount
BL – Bonnet Lock Device (patent protected)
CL – Chlorine Cleaning
HD – Hydrostatic Testing (100%) (MSS SP-61)
OC – Oxygen Cleaning
SG – (Sour Gas) meets the requirements of NACE MR0175/ISO 15156-3 Corrigendum 2 (for Chloride conditions ≤ 50 mg/l [ppm]) and NACE MR0103-2005 (SS only)
SG3 – (Sour Gas) meets the requirements of NACE MR0175/ISO 15156-3 Corrigendum 2 (for Chloride conditions > 50 mg/l [ppm])
SP – Special Requirements - please specify

Notes

1. For other body materials, consult factory.
2. Consult factory for other optional connections.
3. M251 not available in GRAFOIL® or Graphite.

Copyright © 2013 Pentair. All rights reserved.

Block and Bleed Gauge Valves – M25 ASME B31.1 and B31.3 (meets MSS SP-105)

Ordering Information – Power Industry Applications[1]

M25 HP S – 44C – XP – AM

Model Number

M25 HP

Body Material

S – SS, A479-316

Connections (Inlet/Outlet)

4M – 1/2-inch MNPT x 1/2-inch MNPT
44 – 1/2-inch MNPT x 1/2-inch FNPT
44F – 1/2-inch FNPT x 1/2-inch MNPT
46 – 3/4-inch MNPT x 1/2-inch FNPT
4 – 1/2-inch FNPT x 1/2-inch FNPT

C – Male plain end (CS is black oxide coated)

Options

AM – AGCO Mount
SP – Special Requirements - please specify

Notes

1. All Power M25 Gauge Valves come standard with GRAFOIL® packing, integral seats, bonnet locks, and are subjected to hydrostatic testing.
2. SS ratings:
   6000 psig @ 100°F [414 barg @ 38°C]
   2915 psig @ 1000°F [201 barg @ 538°C]

Copyright © 2013 Pentair. All rights reserved.

Multi-Port Gauge Valves – M5 and M51

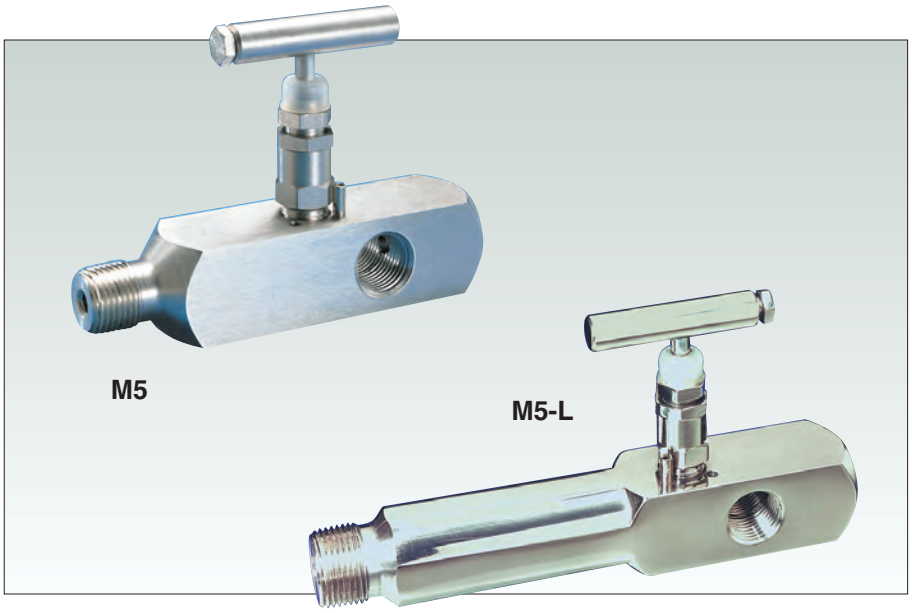

Product Overview

The M5 and M51 are multi-port gauge valves allowing the versatile positioning of gauges or pressure switches without requiring additional penetration of the main piping. For high-pressure applications, the M51 is a metal seat version of the lightweight, compact instrument isolation valve.

The standard configuration has a male or female inlet and three 1/2-inch FNPT outlet ports. All valves with male inlet connections are available threaded or prepared for welding and with either standard or extended inlets. The M5 is available with an integral metal seat or as a soft seated plug type allowing the valve to be rodded out.

Features and Benefits

- **Cost savings** are realized with multi-port design by reducing the number of components and process penetrations required for multiple instrument installations. Possible leak points are decreased.
- **Compact design** requires minimum space for operation and installation. Lower valve weight increases strength at the process connection and reduces gauge whip.
- **Long body configuration** allows for a maximum of 4-inch [102 mm] pipe insulation.
- **Roddable seat design** is supplied with replaceable seats, providing easy clean-out and seat replacement.
- **Replaceable soft seat** allows replacement of the soft seat insert without removing the valve from the line. It operates in dirty service with repetitive bubble-tight shutoff.
- **Repairable metal seat** can be resurfaced without removing the valve from the line.
- **Mirror stem finish** burnished to a 16 RMS finish in the packing area enables smooth stem operation and extends packing life.
- **Body-to-bonnet seal** is metal-to-metal in constant compression below the bonnet threads. Prevents bonnet thread corrosion, eliminates possible tensile breakage of bonnet, and gives a reliable seal point.
- **Ball end stem** eliminates seat galling, provides bubble-tight shutoff and long life. The hardened, non-rotating ball ensures perfect alignment closure.
- **Packing below threads** prevents lubricant washout, thread corrosion, and keeps solids from entering the thread area, which can cause galling. It also prevents process contamination.
- **Adjustable packing** adjusts easily – loosen jam nut, tighten bushing slightly, then retighten jam nut. Decreases packing replacement downtime and increases valve life.
- **Dust cover** prevents lubricant washout and keeps contaminants (dirt, rain, etc.) out of bonnet assembly.
- **Safety back seating** prevents stem blowout or accidental removal while in operation and provides a metal-to-metal secondary stem seal while in the full open position.
- **Chrome plating of 316 SS** prevents galling or freezing of stem threads when similar metals mate. CS valves use a 303 SS stem.
- **Rolled threads** provide additional thread strength. The stem, bonnet, and male NPT threads are rolled, not cut.
- **Bonnet lock pin** is another safety feature which prevents the accidental separation of the bonnet from the body. However, normal valve maintenance and repair are still easily accomplished.

Copyright © 2013 Pentair. All rights reserved.

Multi-Port Gauge Valves – M5 and M51 Specifications[3]

Notes

1. M5 metal seat only.
2. Approximate valve weight:
   - standard 2.5 lb [1.1 kg].
   - long 3.0 lb [1.4 kg].
   Orifice Size: 0.187-inch [4.8 mm] diameter.
   Valve C_V 0.523 maximum.
   Long body length 7.25-inch [184.2 mm] for 4-inch [102.0 mm] insulation.
3. For Hastelloy® and SG3 call factory for dimensions and weights.

M5 and M51 Metal Seat Dimensions, inches [mm]

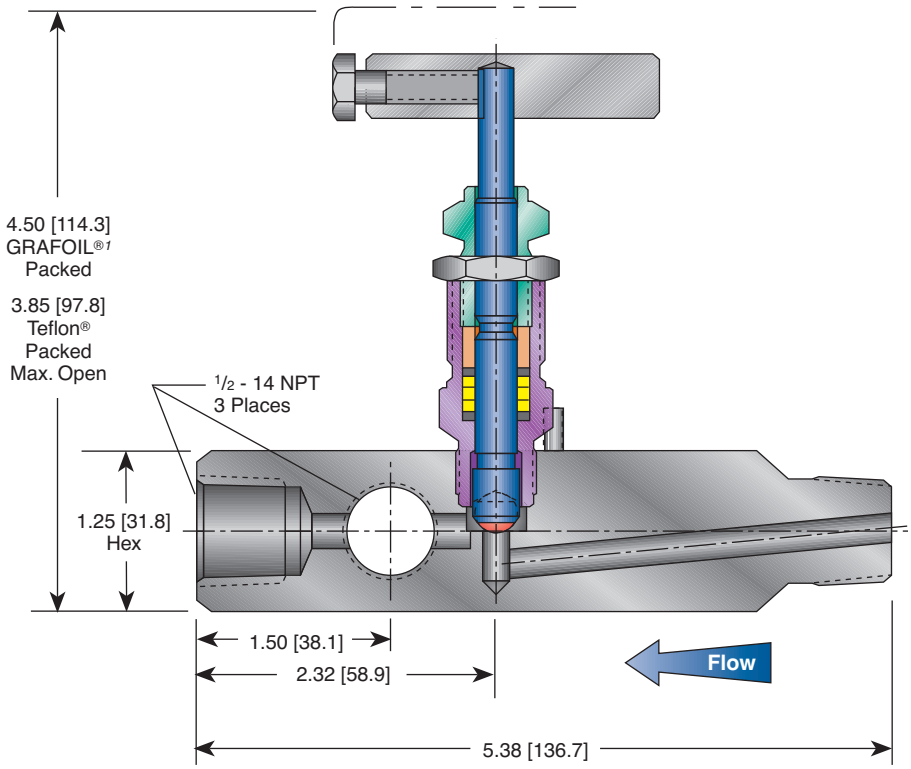

Notes

1. Approximate valve weight:
   - standard 2.5 lb [1.1 kg].
   Orifice Size: 0.187-inch [4.8 mm] diameter.
   Valve C_V 0.83 maximum.
2. For Hastelloy® and SG3 call factory for dimensions and weights.

M5 Soft Seat Dimensions, inches [mm]

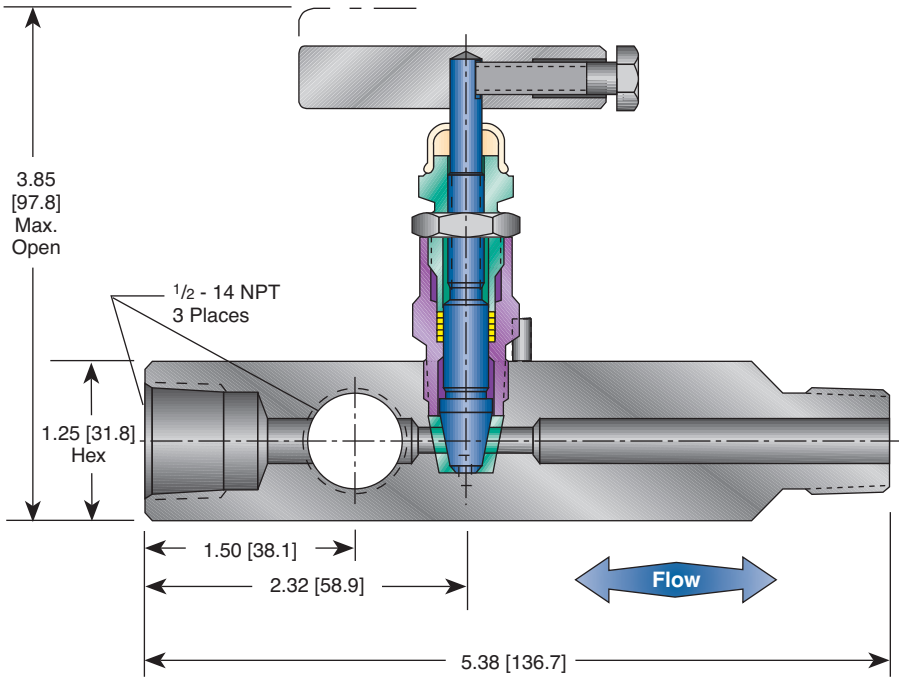

Copyright © 2013 Pentair. All rights reserved.

Multi-Port Gauge Valves – M5 and M51 Specifications

Standard Materials

M5 Metal Seat

Valve	Body	Bonnet	Stem	Ball	Packing
CS[1]	A105 CS	A105 CS	A581 303 SS	17-4 PH	GRAFOIL®, Low Emission Graphite
CS[1]	A105 CS	A108 CS	A581 303 SS	17-4 PH	Teflon®
SS	A479 316 SS	A479 316 SS	A276 316 SS	316 SS	GRAFOIL®, Low Emission Graphite
SS	A479 316 SS	A479 316 SS	A276 316 SS	316 SS	Teflon®
Monel®	Monel® R405	Monel® R405	Monel® 400	Monel® K500	Teflon®
SG[2]	A479 316 SS	A479 316 SS	Monel® 400	Monel® K500	GRAFOIL®, Low Emission Graphite
SG[2]	A479 316 SS	A479 316 SS	Monel® 400	Monel® K500	Teflon®
SG3[5]	Hastelloy® C-276	Hastelloy® C-276	Hastelloy® C-276	Elgiloy®	GRAFOIL®, Low Emission Graphite
SG3[5]	Hastelloy® C-276	Hastelloy® C-276	Hastelloy® C-276	Elgiloy®	Teflon®

M51 Metal Seat

Valve	Body	Bonnet	Stem	Ball
SS	A479 316 SS	A479 316 SS	A276 316 SS	A151 316 SS
SG[2]	A479 316 SS	A479 316 SS	Monel® 400	Monel® K500
SG3[5]	Hastelloy® C-276	Hastelloy® C-276	Hastelloy® C-276	Elgiloy®

M5 Soft Seat

Valve	Body	Bonnet	Stem	Packing	Seat[3]
CS[1]	A108 CS	A108 CS	A581 303 SS	Teflon®	Delrin®
SS	A479 316 SS	A479 316 SS	A276 316 SS	Teflon®	Elgiloy®
Monel®	Monel® R405	Monel® R405	Monel® 400	Teflon®	PCTFE[4]
SG[2]	A479 316 SS	A479 316 SS	Monel® 400	Teflon®	Delrin®
SG3[5]	Hastelloy® C-276	Hastelloy® C-276	Hastelloy® C-276	Teflon®	Delrin®

Pressure and Temperature Ratings

M5 Metal Seat

Valve	Packing	Ratings
CS	GRAFOIL®, Low Emission Graphite	6000 psig @ 200°F [414 barg @ 93°C] 1500 psig @ 850°F [103 barg @ 454°C]
SS, SG, SG3	GRAFOIL®, Low Emission Graphite	6000 psig @ 200°F [414 barg @ 93°C] 1500 psig @ 1000°F [103 barg @ 454°C]
CS, SS, Monel®, SG, SG3	Teflon®	6000 psig @ 200°F [414 barg @ 93°C] 4000 psig @ 500°F [276 barg @ 260°C]

M51 Metal Seat

CS, SS, SG, SG3	Teflon®	10,000 psig @ 200°F [689 barg @ 93°C] 4000 psig @ 500°F [276 barg @ 260°C]

M5 Soft Seat

CS, SS, Monel®, SG, SG3	Teflon®	6000 psig @ 200°F [414 barg @ 93°C]

Notes

1. CS is zinc-cobalt plated to prevent corrosion. Plain end valves are black oxide coated.
2. SG (Sour Gas) meets the requirements of NACE MR0175/ISO 15156-3 Corrigendum 2 (for Chloride conditions ≤ 50 mg/l [ppm]) and NACE MR0103-2005.
3. PEEK and Teflon® also available.
4. PCTFE (Polychlorotrifluoroethylene) is the exact equivalent of Kel-F®.
5. SG3 (Sour Gas) meets the requirements of NACE MR0175/ISO 15156-3 Corrigendum 2 (for Chloride conditions > 50 mg/l [ppm]).
6. Elgiloy® is a registered trademark of Elgiloy Specialty Metals.

Copyright © 2013 Pentair. All rights reserved.

Multi-Port Gauge Valves – M5 and M51 Specifications

Pressure vs. Temperature[1] – M5 and M51 Metal Seat

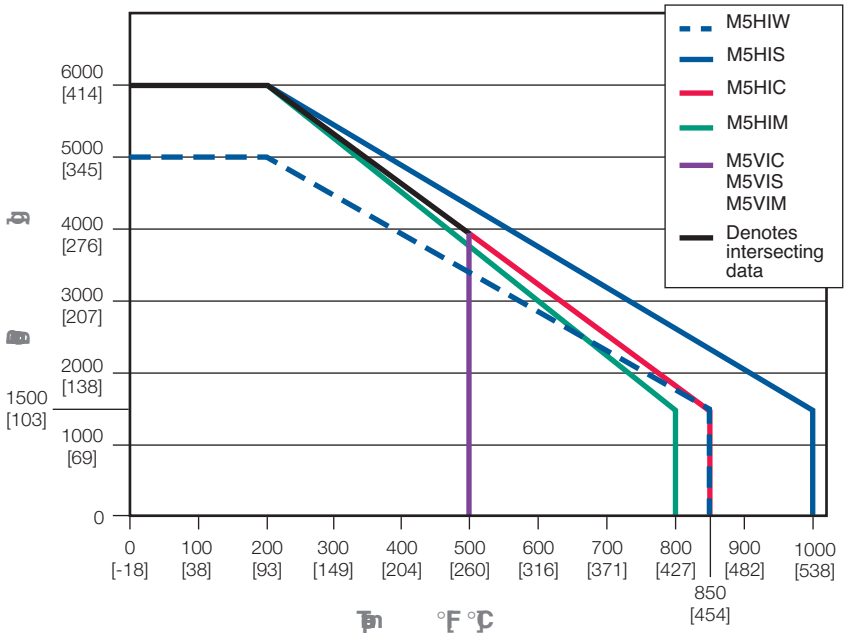

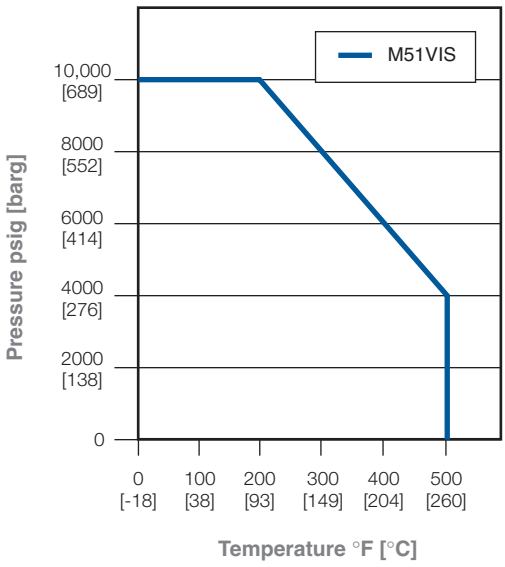

Pressure vs. Temperature – M5 Soft Seat

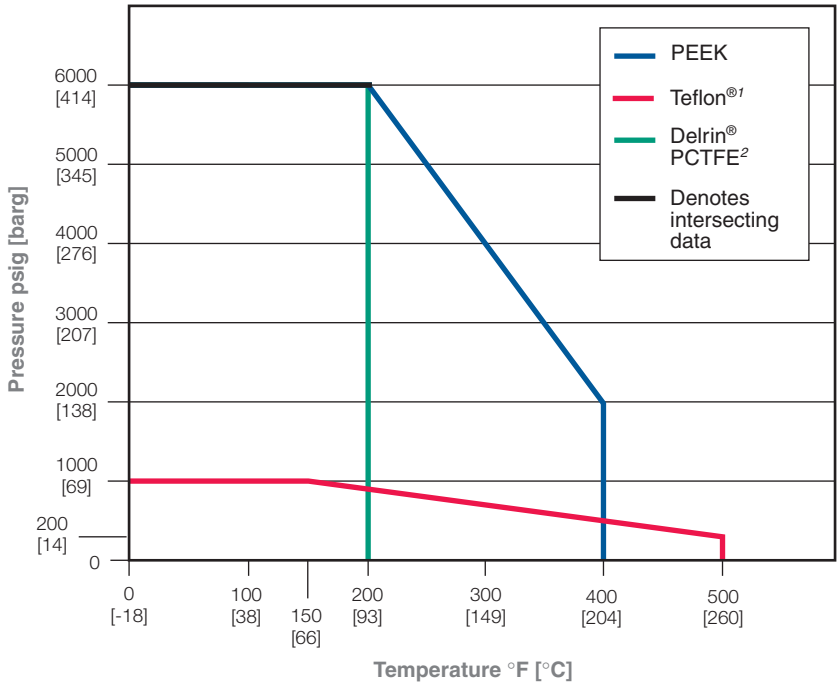

Notes

1. O-ring packed soft seat valve 400°F [204°C] maximum.
2. PCTFE (Polychlorotrifluoroethylene) is the exact equivalent of Kel-F®.

Copyright © 2013 Pentair. All rights reserved.

Multi-Port Gauge Valves – M5 Metal Seat Specifications

Ordering Information – Metal Seat

M5 H I S – 44L –SG

Packing

H – GRAFOIL®
V – Teflon®
E – Low Emission Graphite

Seat

I – Integral

Body Material[1]

C – CS, A105
S – SS, A479-316
M – Monel®
W – 316L
J – Hastelloy®

Connections (Inlet/Outlet)[1]

44 – 1/2-inch MNPT x (3) 1/2-inch FNPT
46 – 3/4-inch MNPT x (3) 1/2-inch FNPT

C – Male plain end (CS is black oxide coated)
L – Long body extension (4-inch insulation)

Options

AL – Arctic Lubricant (Low Temperature Service) - not available for CS valves
BL – Bonnet Lock Device (patent protected)
CL – Chlorine Cleaning
HD – Hydrostatic Testing (100%)(MSS MSP-61)
OC – Oxygen Cleaning
SG – (Sour Gas) meets the requirements of NACE MR0175/ISO 15156-3 Corrigendum 2 (for Chloride conditions ≤ 50 mg/l [ppm]) and NACE MR0103-2005 (SS only)
SG3 – (Sour Gas) meets the requirements of NACE MR0175/ISO 15156-3 Corrigendum 2 (for Chloride conditions > 50 mg/l [ppm]) - if accessories are added, consult factory for materials
SP – Special Requirements - please specify

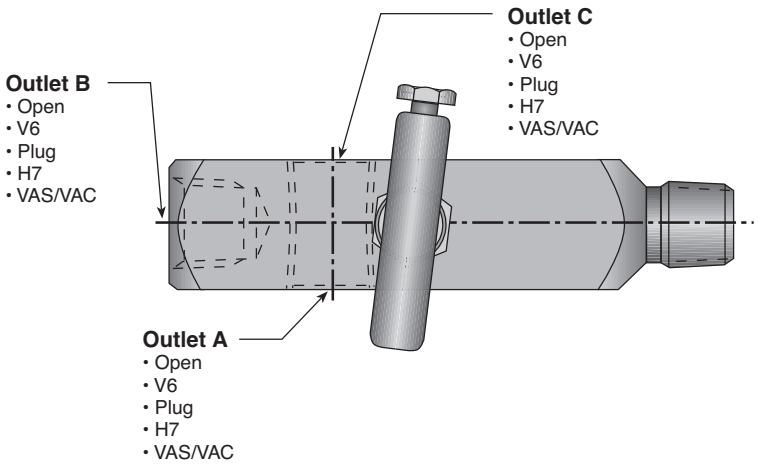

Note

1. Call factory for optional material, other sizes, or end connections.

Copyright © 2013 Pentair. All rights reserved.

Multi-Port Gauge Valves – M5 Soft Seat Specifications

Notes

1. PCTFE (Polychlorotrifluoroethylene) is the exact equivalent of Kel-F®.
2. Call factory for optional materials, other sizes, or end connections.
3. Temperature limited to seat materials.
4. Bonnet lock not available.

Ordering Information – Soft Seat

M5 V D S – 44L –SG

Packing

V – Teflon®
R – Viton® O-ring
E – Low emissions Graphite[3]

Seat

V – Teflon®
D – Delrin® (standard)
E – PEEK
K – PCTFE[1]

Body Material[2]

C – CS, A108
S – SS, A479-316
M – Monel®
W – 316L
J – Hastelloy®[4]

Connections (Inlet/Outlet)[2]

44 – 1/2-inch MNPT x (3) 1/2-inch FNPT
46 – 3/4-inch MNPT x (3) 1/2-inch FNPT

C – Male plain end (CS is black oxide coated)
L – Long body extension (4-inch insulation)

Options

AL – Arctic Lubricant (Low Temperature Service) - not available for CS valves
BL – Bonnet Lock Device (patent protected)
CL – Chlorine Cleaning
HD – Hydrostatic Testing (100%)(MSS MSP-61)
OC – Oxygen Cleaning
SG – (Sour Gas) meets the requirements of NACE MR0175/ISO 15156-3 Corrigendum 2 (for Chloride conditions ≤ 50 mg/l [ppm]) and NACE MR0103-2005 (SS only)
SG3 – (Sour Gas) meets the requirements of NACE MR0175/ISO 15156-3 Corrigendum 2 (for Chloride conditions > 50 mg/l [ppm]) - if accessories are added, consult factory for materials
SP – Special Requirements - please specify

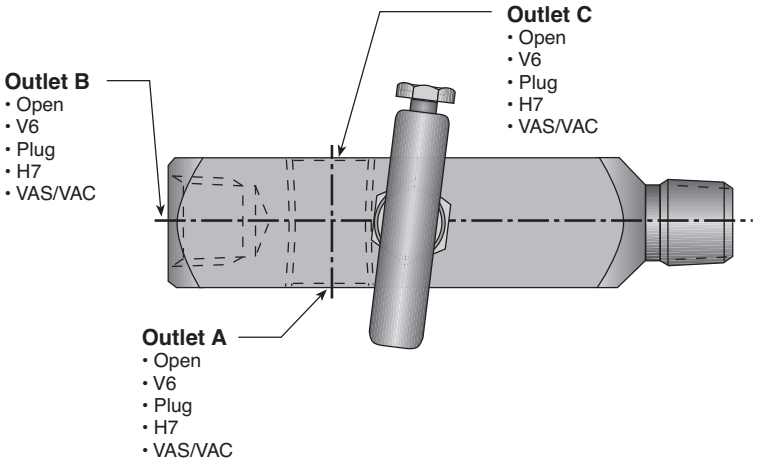

Copyright © 2013 Pentair. All rights reserved.

Multi-Port Gauge Valves – M5 ASME B31.1 and B31.3 Specifications Meets MSS SP-105

Ordering Information – Power Industry Applications[1]

M5HP S – 44LC – XP – SP

Body Material

C – CS, A105
S – SS, A479-316

Connections (Inlet/Outlet)

44 – 1/2-inch MNPT x (3) 1/2-inch FNPT
46 – 3/4-inch MNPT x (3) 1/2-inch FNPT

C – Male plain end (CS is black oxide coated)
L – Long body (4-inch insulation)

Options

SP – Special Requirements - please specify

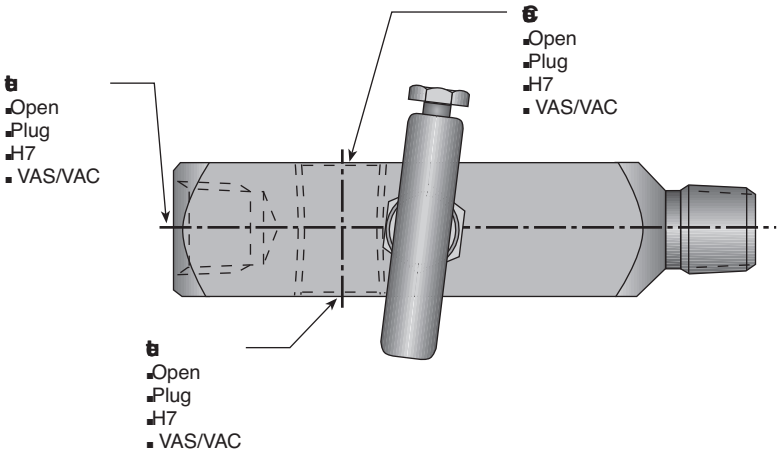

Note

1. All Power M5 Gauge Valves come standard with GRAFOIL® packing, integral seats, bonnet locks, and are subjected to hydrostatic testing.

Copyright © 2013 Pentair. All rights reserved.

Multi-Port Gauge Valves – M51 10,000 psi Specifications

Note

1. Call factory for optional materials, other sizes, or end connections.

Ordering Information

M51 V I S – 44LC – SG

Packing

V – Teflon®
Not available in GRAFOIL®

Seat

I – Integral

Body Material[1]

S – SS, A479-316
J – Hastelloy®

Connections (Inlet/Outlet)[1]

44 – 1/2-inch MNPT x (3) 1/2-inch FNPT
46 – 3/4-inch MNPT x (3) 1/2-inch FNPT

C – Male plain end (CS is black oxide coated)
L – Long body extension (4-inch insulation)

Options

AL – Arctic Lubricant (Low Temperature Service) - not available for CS valves
CL – Chlorine Cleaning
HD – Hydrostatic Testing (100%) (MSS MSP-61)
OC – Oxygen Cleaning
SG – (Sour Gas) meets the requirements of NACE MR0175/ISO 15156-3 Corrigendum 2 (for Chloride conditions ≤ 50 mg/l [ppm]) and NACE MR0103-2005 (SS only)
SG3 – (Sour Gas) meets the requirements of NACE MR0175/ISO 15156-3 Corrigendum 2 (for Chloride conditions > 50 mg/l [ppm]) - if accessories are added, consult factory for materials
SP – Special Requirements - please specify

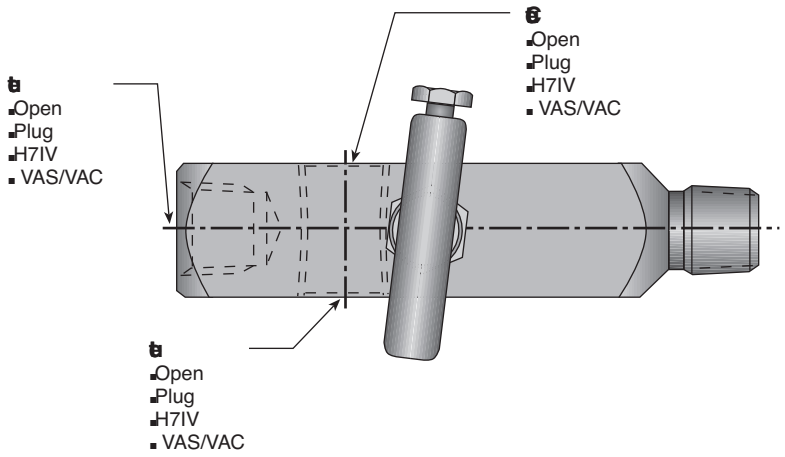

Copyright © 2013 Pentair. All rights reserved.

Multi-Port Gauge Valves – M5A

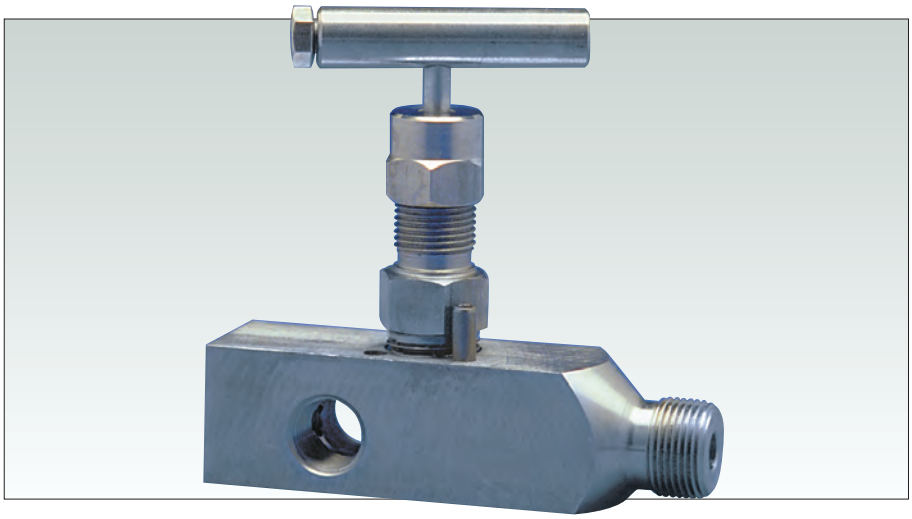

Product Overview

The M5A gauge valve is a 3/8-inch [9.5 mm] orifice multi-port gauge valve. It is designed to be used with gauge mounting and other instrument tie-ins in the process industries, without requiring additional penetrations of the main piping. The M5A provides premium performance and long valve life.

This valve is available with replaceable, roddable, metal or soft seats with 3/8-inch [9.5 mm] diameter orifice. The unique metal seat design, an exclusive feature of Anderson Greenwood, offers bubble-tight shutoff with straight-through flow characteristics.

Features and Benefits

- **Cost savings;** multi-port outlet reduces the number of components required for instrument installation while decreasing possible leak points.
- **Compact design** requires minimum space for operation and installation. Lower valve weight increases strength at the process connection and reduces gauge whip.
- **Unique metal seat** has straight-through flow path design for reduced plugging in high-temperature service.
- **Long body configuration** allows for a maximum of 4-inch [102 mm] pipe insulation.
- **Roddable seat design** is supplied with replaceable seats, providing easy clean-out and seat replacement.
- **Replaceable soft seat** allows replacement of the soft seat insert without removing the valve from the line. It operates in dirty service with repetitive bubble-tight shutoff.
- **Mirror stem finish** burnished to a 16 RMS finish in the packing area enables smooth stem operation and extends packing life.
- **Body-to-bonnet seal** is metal-to-metal in constant compression below the bonnet threads. Prevents bonnet thread corrosion, eliminates possible tensile breakage of bonnet, and gives a reliable seal point.
- **Adjustable packing** adjusts easily by tightening the packing nut slightly. Decreases packing replacement downtime and increases valve life.
- **Safety back seating** prevents stem blowout or accidental removal while in operation.
- **Chrome plating of 316 SS** prevents galling or freezing of stem threads when similar metals mate. CS valves use a 303 SS stem.
- **Rolled threads** provide additional thread strength. The stem, bonnet, and male NPT threads are rolled, not cut.
- **Bonnet lock pin** is another safety feature which prevents the accidental separation of the bonnet from the body. However, normal valve maintenance and repair are still easily accomplished.

Copyright © 2013 Pentair. All rights reserved.

Multi-Port Gauge Valves – M5A Specifications

Dimensions, inches [mm]

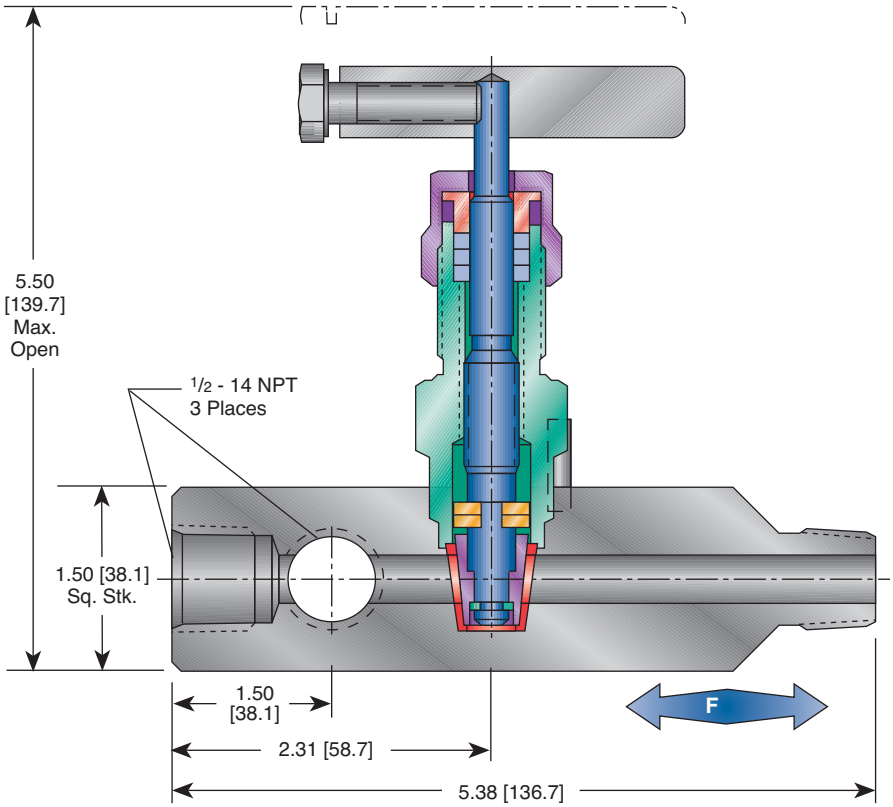

Notes

1. CS is zinc-cobalt plated to prevent corrosion.
2. SG (Sour Gas) meets the requirements of NACE MR0175/ISO 15156-3 Corrigendum 2 (for Chloride conditions ≤ 50 mg/l [ppm]) and NACE MR0103-2005.
3. SG3 (Sour Gas) meets the requirements of NACE MR0175/ISO 15156-3 Corrigendum 2 (for Chloride conditions > 50 mg/l [ppm]).

Standard Materials – Metal and Soft Seats

Valve	Body	Stem	Bonnet
CS[1]	A105 CS	A582-303 SS	A108 CS
316 SS	A479-316 SS	A276-316 SS	A479-316 SS
316L SS	A479-316L SS	A276-316 SS	A479-316 SS
SG[2]	A479-316 SS	Monel® R405	A479-316 SS
Monel®	Monel® 400	Monel® R405	Monel® R405
SG3[3]	Hastelloy® C-276	Hastelloy® C-276	Hastelloy® C-276

Pressure and Temperature Ratings

Metal Seat		
Teflon® packed	1500 psig @ 500°F	[103 barg @ 260°C]
GRAFOIL® packed	1500 psig @ 850°F	[103 barg @ 454°C]
Soft Seat		
Delrin	6000 psig @ 200°F	[414 barg @ 93°C]
PCTFE (Kel-F®)	5000 psig @ 200°F	[345 barg @ 93°C]
PEEK	6000 psig @ 200°F 2000 psig @ 400°F	[414 barg @ 93°C] [138 barg @ 204°C]
Teflon®	1000 psig @ 150°F 200 psig @ 500°F	[69 barg @ 66°C] [14 barg @ 260°C]

Copyright © 2013 Pentair. All rights reserved.

Multi-Port Gauge Valves – M5A Specifications

Pressure vs. Temperature – Metal Seat

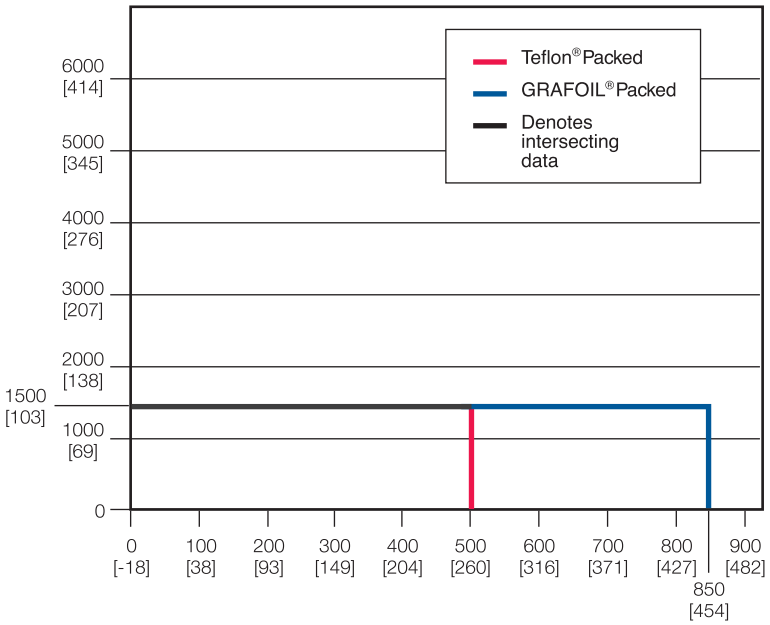

Pressure vs. Temperature – Soft Seat

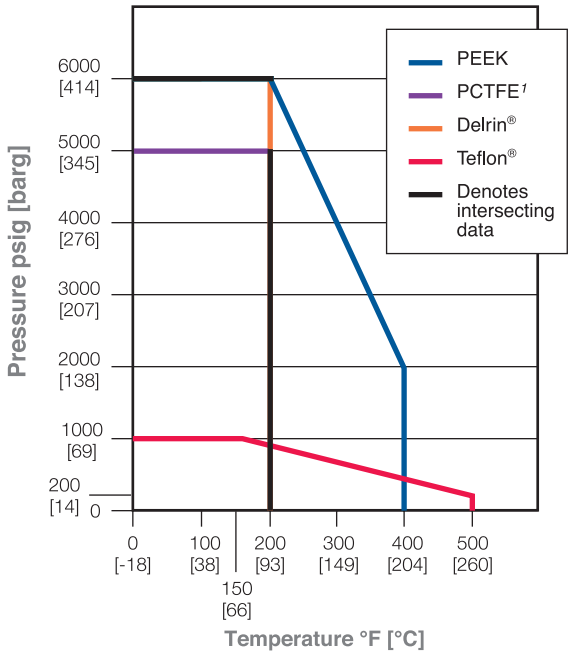

Note

1. PCTFE (Polychlorotrifluoroethylene) is the exact equivalent of Kel-F®.

Copyright © 2013 Pentair. All rights reserved.

Multi-Port Gauge Valves – M5A Metal Seat Specifications

Ordering Information – Metal Seat

M5A H S S – 44L – SG

Packing

H – GRAFOIL®
V – Teflon®

Seat

S – 316 SS (standard)
M – Monel®

Body Material

C – CS, A105
S – SS, A479-316
M – Monel® 400
W – SS, A479-316L
J – Hastelloy®

Connections (Input/Output)

44 – 1/2-inch MNPT x (3) 1/2-inch FNPT
46 – 3/4-inch MNPT x (3) 1/2-inch FNPT

C – Male socket weld
L – Long body (7.75-inch [196.8 mm])

Options

AL – Arctic Lubricant (Low Temperature Service) - not available for CS valves
BL – Bonnet Lock Device (patent protected)
CL – Chlorine Cleaning
HD – Hydrostatic Testing (100%) (MSS SP-61)
OC – Oxygen Cleaning
SG – (Sour Gas) meets the requirements of NACE MR0175/ISO 15156-3 Corrigendum 2 (for Chloride conditions ≤ 50 mg/l [ppm]) and NACE MR0103-2005 (SS only)
SG3 – (Sour Gas) meets the requirements of NACE MR0175/ISO 15156-3 Corrigendum 2 (for Chloride conditions > 50 mg/l [ppm]) - if accessories are added, consult factory for materials
SP – Special Requirements - please specify

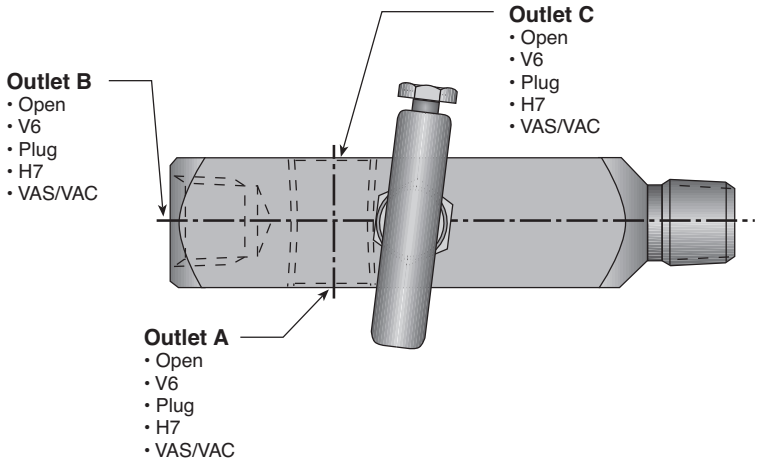

Copyright © 2013 Pentair. All rights reserved.

Multi-Port Gauge Valves – M5A Soft Seat Specifications

Ordering Information – Soft Seat

M5A V D S – 44L – SG

Packing

V – Teflon®

Seat

V – Teflon®
D – Delrin® (standard)
E – PEEK
K – PCTFE[1]

Body Material

C – CS, A105
S – SS, A479-316 SS
M – Monel® 400
W – SS, A479-316L
J – Hastelloy®

Connections (Input/Output)

44 – 1/2-inch MNPT x (3) 1/2-inch FNPT
46 – 3/4-inch MNPT x (3) 1/2-inch FNPT

C – Male socket weld
L – Long body (7.75-inch [196.8 mm])

Options

AL – Arctic Lubricant (Low Temperature Service) - not available for CS valves
BL – Bonnet Lock Device (patent protected)
CL – Chlorine Cleaning
HD – Hydrostatic Testing (100%) (MSS SP-61)
OC – Oxygen Cleaning
SG – (Sour Gas) meets the requirements of NACE MR0175/ISO 15156-3 Corrigendum 2 (for Chloride conditions ≤ 50 mg/l [ppm]) and NACE MR0103-2005 (SS only)
SG3 – (Sour Gas) meets the requirements of NACE MR0175/ISO 15156-3 Corrigendum 2 (for Chloride conditions > 50 mg/l [ppm]) - if accessories are added, consult factory for materials
SP – Special Requirements - please specify

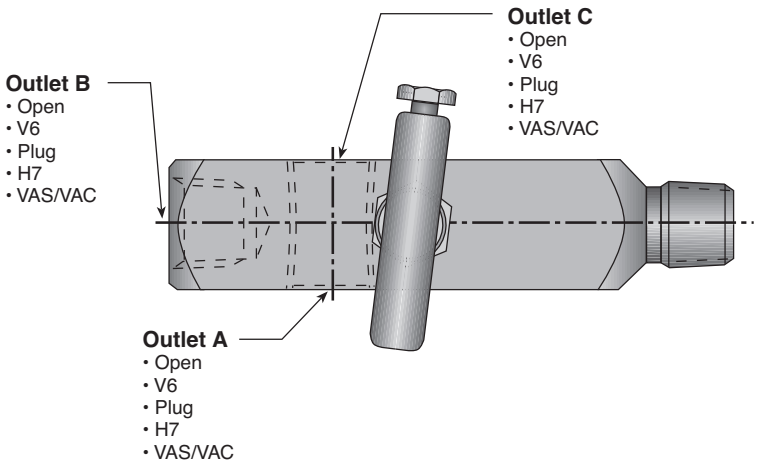

Note

1. PCTFE (Polychlorotrifluoroethylene) is the exact equivalent of Kel-F®.

Copyright © 2013 Pentair. All rights reserved.

Multi-Port Gauge Valves – M5F

Product Overview

The M5F gauge valve is a 1/4-inch FNPT x (3) 1/4-inch FNPT multi-port valve for universal use wherever more than one outlet is required. The valve features a field replaceable soft seat that ensures repeatable bubble-tight closure and a long, trouble-free life.

A typical application for this valve is in the double-block and bleed assembly in natural gas piped five-valve manifolds for recording orifice meter service, and a 1/4-inch gauge valves where bleed-off or sampling valves are needed in the same installation.

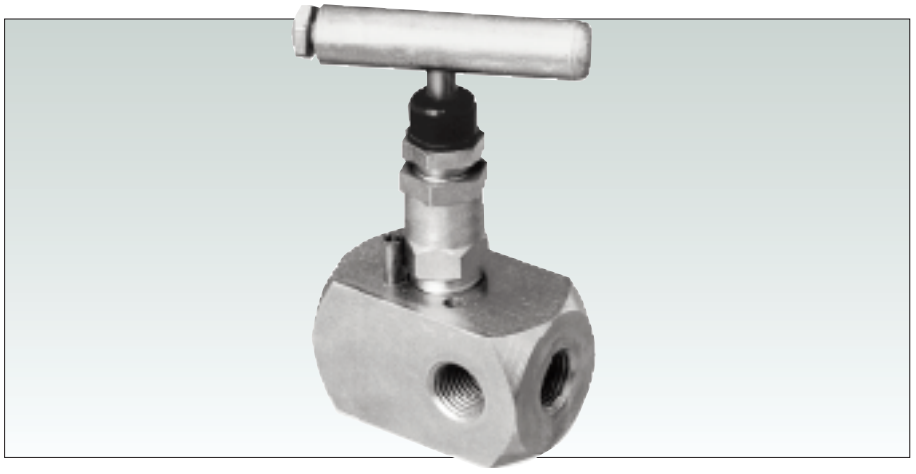

Features and Benefits

- **Bonnet-to-body seal** is metal-to-metal in constant compression, below the bonnet threads. This prevents process bonnet thread corrosion, eliminates possible tensile breakage of bonnet, and gives a reliable seal point.
- **Rolled stem and bonnet threads** are rolled (rather than cut), providing extra thread strength.
- **Dust cover** protects stem from lubricant contamination.
- **Packing below stem threads** prevents lubricant washout and thread corrosion. Keeps solids from entering the thread area, which can cause galling. Also prevents process contamination/corrosion.
- **Replaceable soft seat** allows replacement of the seat insert without removing the valve from the line. Operates in dirty service with repetitive bubble-tight shutoff.
- **Teflon® packing** is easily adjusted by loosening the jam nut, tightening the bushing slightly, then re-tightening the jam nut. This feature reduces downtime and ensures long valve life.
- **Mirror finished stem** is burnished to a 16 RMS finish in the packing area. This provides smooth stem operation and increases packing life.
- **Safety back seating** prevents stem blowout and accidental removal while in operation. This feature also provides a metal-to-metal secondary stem seal while in the full open position.
- **Straight-through flow path** means high flow capacity, bi-directional flow, and rodding capabilities.

Copyright © 2013 Pentair. All rights reserved.

Multi-Port Gauge Valve – M5F Specifications[5]

Dimensions, inches [mm]

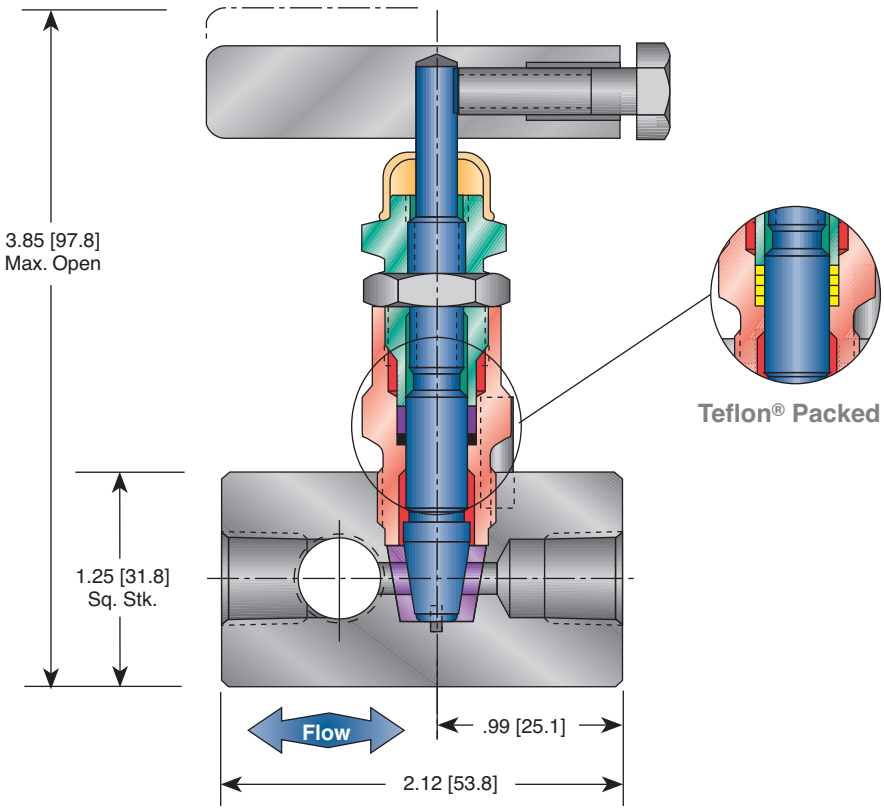

Standard Materials

Valve[1]	Body and Bonnet	Stem	Stem Seal	Seat
CS[2]	A108 CS	A581-303 SS	Viton® or Teflon®	Delrin®
SS	A479-316 SS	A276-316 SS	Viton® or Teflon®	Delrin®
SG[6]	A479-316 SS	Monel® 400	Teflon®	Delrin®
SG3[7]	Hastelloy® C-276	Hastelloy® C-276	Teflon®	Delrin®

Pressure and Temperature Ratings

Valve	Packing[3]	Seat	Ratings	
CS[2], SS, SG3	Viton® or Teflon®	Delrin®/PCTFE[4]	6000 psig @ 200°F	[414 barg @ 93°C]
CS[2], SS, SG3	Viton® or Teflon®	PEEK	6000 psig @ 200°F 2000 psig @ 400°F	[414 barg @ 93°C] [138 barg @ 204°C]
CS[2], SS, SG3	Viton® or Teflon®	Teflon®	1000 psig @ 150°F 200 psig @ 500°F	[69 barg @ 66°C] [14 barg @ 260°C]

Notes

1. Approximate valve weight:
   - standard 1.0 lb [0.5 kg].
   Orifice Size: 0.187-inch [4.8 mm] diameter.
   Valve C_V 0.83 maximum.
2. CS body and bonnet are zinc-cobalt plated to prevent corrosion.
3. O-ring packed maximum temperature 400°F [204°C].
4. PCTFE (Polychlorotrifluoroethylene) is the exact equivalent of Kel-F®.
5. For Hastelloy® and SG3 call factory for dimensions and weights.
6. SG (Sour Gas) meets the requirements of NACE MR0175/ISO 15156-3 Corrigendum 2 (for Chloride conditions ≤ 50 mg/l [ppm]) and NACE MR0103-2005.
7. SG3 (Sour Gas) meets the requirements of NACE MR0175/ISO 15156-3 Corrigendum 2 (for Chloride conditions > 50 mg/l [ppm]).

Copyright © 2013 Pentair. All rights reserved.

Multi-Port Gauge Valve – M5F Specifications

Notes

1. PCTFE (Polychlorotrifluoroethylene) is the exact equivalent of Kel-F®.
2. O-ring packed maximum temperature 400°F [204°C].
3. CS is zinc-cobalt plated to prevent corrosion.

Pressure vs. Temperature

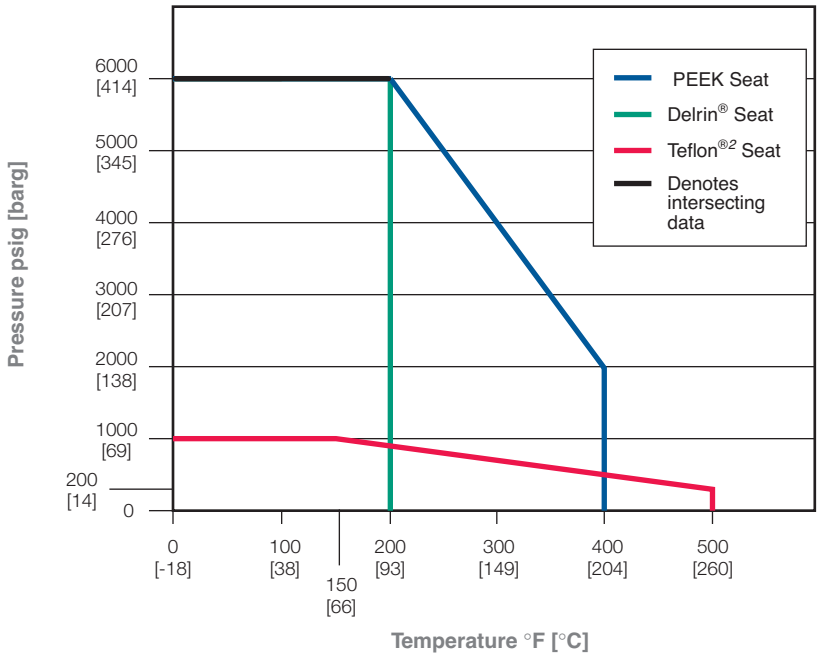

Ordering Information

M5F V D S – 2 – SG

Packing

V – Teflon®
R – O-ring with Teflon® Backup

Seat

D – Delrin® (standard)
K – PCTFE1
E – PEEK
V – Teflon®

Body

C – CS3
S – 316 SS
J – Hastelloy®

Connections (Inlet/Outlet)

2 – 1/4-inch FNPT x (3) 1/4-inch FNPT

Options

BL – Bonnet Lock Device (patent protected)
CL – Chlorine Cleaning
HD – Hydrostatic Testing (100%)(MSS SP-61)
OC – Oxygen Cleaning
SG – (Sour Gas) meets the requirements of NACE MR0175/ISO 15156-3 Corrigendum 2 (for Chloride conditions ≤ 50 mg/l [ppm]) and NACE MR0103-2005 (SS only)
SG3 – (Sour Gas) meets the requirements of NACE MR0175/ISO 15156-3 Corrigendum 2 (for Chloride conditions > 50 mg/l [ppm]) - if accessories are added, consult factory for materials

Copyright © 2013 Pentair. All rights reserved.

OS&Y Root Valves – M5K, M5AK, and M5YK

Root Isolation Valves with Outside Screw and Yoke, Bolted Bonnet Construction

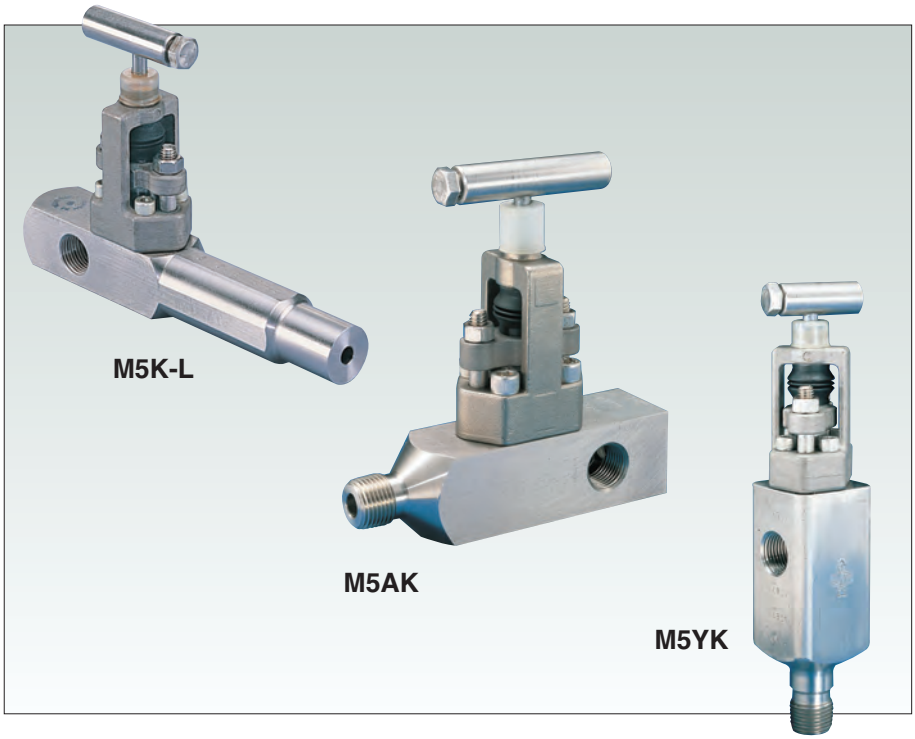

Product Overview

M5K Gauge Valve

The M5K gauge valve is a multi-ported OS&Y root/primary instrument isolation valve, designed for use with gauge mountings and other pressure instruments in refineries and chemical plants. The M5K facilitates installation of multiple measurement devices without additional penetrations of the main piping.

The M5K is available in metal seat design with integral seat, or with various replaceable, roddable soft seats (1/4-inch [6.4 mm] diameter orifice).

M5AK Gauge Valve

The M5AK gauge valve is a multi-ported OS&Y root/primary instrument isolation valve, designed for use with gauge mounting and other instrument ties in refineries and chemical plants. Additional penetrations of the main piping are not required.

The M5AK is available with a variety of replaceable, roddable, metal or soft seats, with 3/8-inch [9.5 mm] diameter orifice. The unique metal seat design offers bubble-tight shutoff with straight-through flow characteristics.

M5YK Gauge Valve

The M5YK gauge valve is a versatile, dual outlet valve for use in gauge mounting or as root/primary isolation valve in differential pressure transmitter installations. In-line construction of body and OS&Y bonnet allows installation and replacement of valves in orifice taps without removal of bonnet assembly.

The valve is designed for safety, service, and economy. The long-necked inlet provides room for insulation and the dual 1/2-inch NPT outlet ports provide an extra outlet for bleeder or sampling valves.

The M5YK is standard with 1/4-inch [6.4 mm] integral seat. Available with seat insert and stem ball of selected metals to match process requirements.

Features and Benefits

- **Four-bolt outside screw and yoke (OS&Y) bonnet** provides easy access to the packing gland. Stem threads are completely isolated from the process. True 4-bolt design.
- **Protective stem bellows and cap** protects against atmospheric contamination and increases the valve life. Bellows and cap help contain stem lubricant (unlike most OS&Y designs) which reduces possible thread galling.
- **Compact design** requires minimum space for operation and installation. Lower valve weight improves strength at the process connection and reduces induced bending moments.
- **Multi-port outlet** means fewer fittings, fewer leak points, and reduced installation cost.
- **Standard SS investment cast yoke** improves valve life by resisting corrosion. Material used is A351-CF8M.
- **Single-piece yoke design** means binding of the stem does not occur as with OS&Y bonnets that use bolts to hold and position the yoke.
- **GRAFOIL® or Teflon® flange gasket ring** offers wide compatibility to process fluids without deteriorating flange gasket (bonnet-to-body).
- **Non-rotating plug design (M5AK)** provides bubble-tight valve closure without metal seat galling and low seating torque.
- **Free-swiveling ball end stem design (M5K, M5YK)** makes for bubble-tight valve closure without seat galling.
- **Integral hard back seat (M5K, M5YK)** protects against stem blowout and provides alternate sealing for longer packing life.
- **Replaceable, roddable soft seat design (M5K, M5AK)** can be specified with the time-proven bubble-tight seat with a fully roddable, bi-directional flow. Standard for the M5K - soft seat orifice diameter is 1/4-inch [6.4 mm] and standard for the M5AK is 3/8-inch [9.5 mm].

Copyright © 2013 Pentair. All rights reserved.

OS&Y Root Valves – M5K Specifications

Notes

1. Approximate valve weight:
   - standard 3.5 lb [1.6 kg].
   - long 4.0 lb [1.8 kg].
   $^{3}/_{16}$-inch [4.8 mm] diameter orifice.

   Valve C_V 0.523 maximum
2. For Hastelloy® and SG3 call factory for dimensions and weights.

Metal Seat Dimensions, inches [mm]

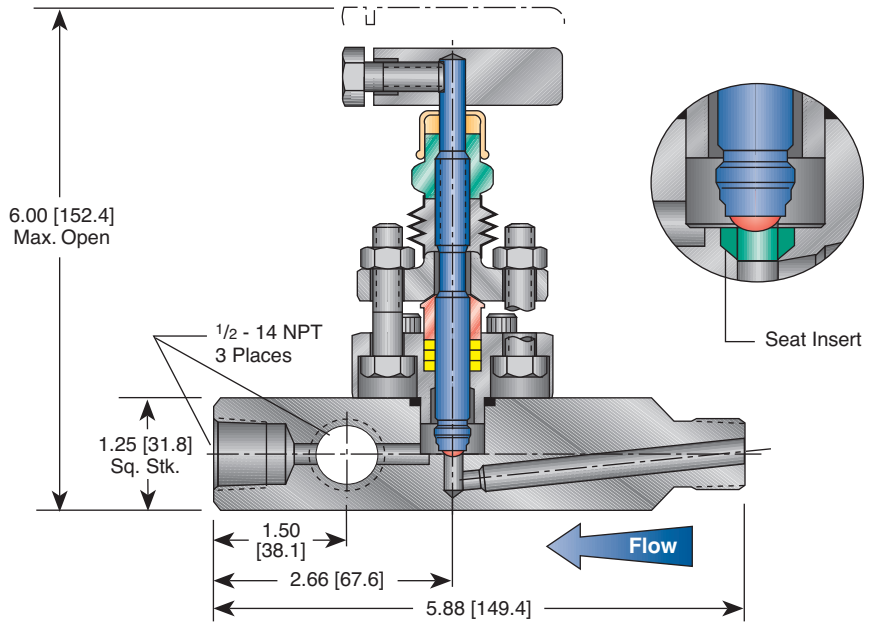

Notes

1. Approximate valve weight:
   - standard 3.5 lb [1.6 kg].
   - long 4.0 lb [1.8 kg].
   $^{1}/_{4}$-inch [6.4 mm] diameter orifice.

   Valve C_V 1.4 maximum
2. For Hastelloy® and SG3 call factory for dimensions and weights.

Soft Seat Dimensions, inches [mm]

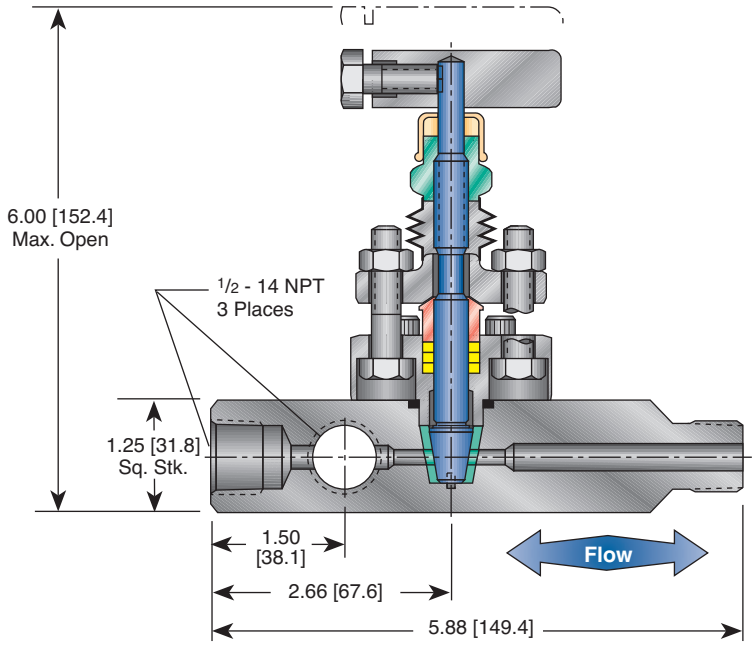

Copyright © 2013 Pentair. All rights reserved.

OS&Y Root Valves – M5K Specifications

Standard Materials

Metal Seat

Valve	Body	Stem	Ball	Yoke	Bolt
CS[1]	A105 CS	A581-303 SS	17-4 PH	A351-CF8M	A286
316 SS	A479-316 SS	A276-316 SS	A276-316 SS	A351-CF8M	A286
316L SS	A479-316L SS	A276-316 SS	A276-316 SS	A351-CF8M	A286
SG[2]	A479-316 SS	Monel® 400	Monel® K500	A351-CF8M	A286
SG3[4]	Hastelloy® C-276	Hastelloy® C-276	Elgiloy®	A494-CW12MW	A286

Soft Seat

Valve	Body	Stem	Yoke	Bolt	Seat
CS[1]	A105 CS	A582-303 SS	A351-CF8M	A286	Delrin®
316 SS	A479-316 SS	A276-316 SS	A351-CF8M	A286	Delrin®
316L SS	A479-316L SS	A276-316 SS	A351-CF8M	A286	Delrin®
SG[2]	A479-316 SS	Monel® R405	A351-CF8M	A286	Delrin®
SG3[4]	Hastelloy® C-276	Hastelloy® C-276	A494-CW12MW	A286	Delrin®

Pressure and Temperature Ratings

Metal Seated

Valve	Packing	Pressure and Temperature Rating
CS[1]	GRAFOIL®	6000 psig @ 200°F [414 barg @ 93°C] 1500 psig @ 850°F [103 barg @ 454°C]
316 SS, SG[2], SG3[4]	GRAFOIL®	6000 psig @ 200°F [414 barg @ 93°C] 1500 psig @ 1000°F [103 barg @ 538°C]
316L SS	GRAFOIL®	5000 psig @ 200°F [345 barg @ 93°C] 1500 psig @ 850°F [103 barg @ 454°C]
CS, 316 SS, SG3[4]	Teflon®	6000 psig @ 200°F [414 barg @ 66°C] 4000 psig @ 500°F [276 barg @ 260°C]

Soft Seated

Valve	Packing	Seat Material	Pressure and Temperature Rating
CS[1]	Teflon® or GRAFOIL®	Delrin® and PCTFE[3]	6000 psig @ 200°F [414 barg @ 93°C]
316 SS	Teflon® or GRAFOIL®	PEEK	6000 psig @ 200°F [414 barg @ 93°C] 2000 psig @ 400°F [138 barg @ 204°C]
316L SS	Teflon® or GRAFOIL®	Teflon®	1000 psig @ 150°F [69 barg @ 66°C] 200 psig @ 500°F [14 barg @ 260°C]
SG3[4]	Teflon® or GRAFOIL®	PEEK	6000 psig @ 200°F [414 barg @ 93°C] 2000 psig @ 400°F [138 barg @ 204°C]
SG3[4]	Teflon® or GRAFOIL®	Teflon®	1000 psig @ 150°F [69 barg @ 66°C] 200 psig @ 500°F [14 barg @ 260°C]

Notes

1. CS is zinc-cobalt plated to prevent corrosion (except male plain end is black oxide coated).
2. SG (Sour Gas) meets the requirements of NACE MR0175/ISO 15156-3 Corrigendum 2 (for Chloride conditions ≤ 50 mg/l [ppm]) and NACE MR0103-2005.
3. PCTFE (Polychlorotrifluoroethylene) is the exact equivalent of Kel-F®.
4. SG3 (Sour Gas) meets the requirements of NACE MR0175/ISO 15156-3 Corrigendum 2 (for Chloride conditions > 50 mg/l [ppm]). If accessories are added, consult factory for materials.

Copyright © 2013 Pentair. All rights reserved.

OS&Y Root Valves – M5K Specifications

Pressure vs. Temperature – Metal Seat

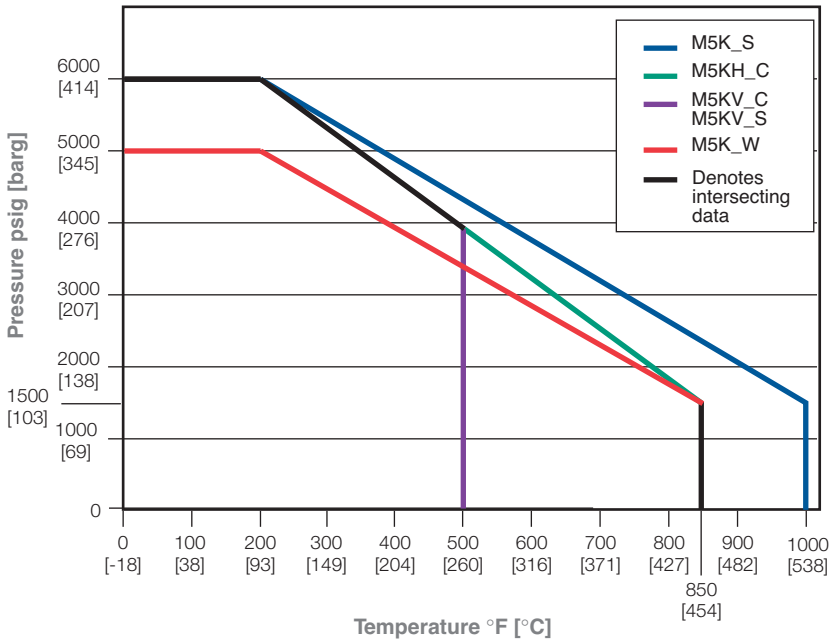

Note

1. PCTFE (Polychlorotrifluoroethylene) is the exact equivalent of Kel-F®.

Pressure vs. Temperature – Soft Seat

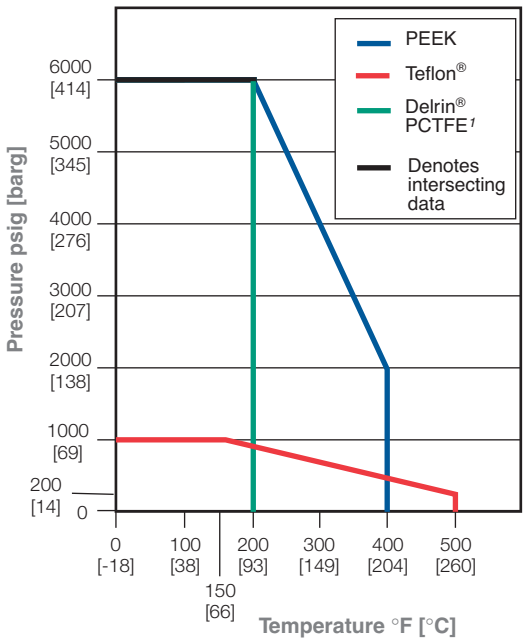

Max. temperature	CS	1500 psig @ 850°F	[103 barg @ 454°C]
	SS	1500 psig @ 1000°F	[103 barg @ 538°C]
Max. pressure	316L SS	5000 psig @ 200°F	[345 barg @ 93°C]

Copyright © 2013 Pentair. All rights reserved.

OS&Y Root Valves – M5K Metal Seat Specifications

M5K Ordering Information – Metal Seat

M5K H I S – 44LC – SG

Packing

H – GRAFOIL®
V – Teflon®

Seat[1]

I – Integral (standard)

Body Material[2]

C – CS, A105[3]
S – SS, A479-316
W – SS, A479-316L
J – Hastelloy®

Connections (Inlet/Outlet)[4]

44 – 1/2-inch MNPT x (3) 1/2-inch FNPT
46 – 3/4-inch MNPT x (3) 1/2-inch FNPT

C – Male plain end (CS is black oxide coated)
L – Long body extension (4-inch insulation)

Options

AL – Arctic Lubricant (Low Temperature Service) - not available for CS valves
CL – Chlorine Cleaning
HD – Hydrostatic Testing (100%) (MSS SP-61)
OC – Oxygen Cleaning
SG – (Sour Gas) meets the requirements of NACE MR0175/ISO 15156-3 Corrigendum 2 (for Chloride conditions ≤ 50 mg/l [ppm]) and NACE MR0103-2005 (SS only)
SG3 – (Sour Gas) meets the requirements of NACE MR0175/ISO 15156-3 Corrigendum 2 (for Chloride conditions > 50 mg/l [ppm]) - if accessories are added, consult factory for materials
SP – Special Requirements - please specify

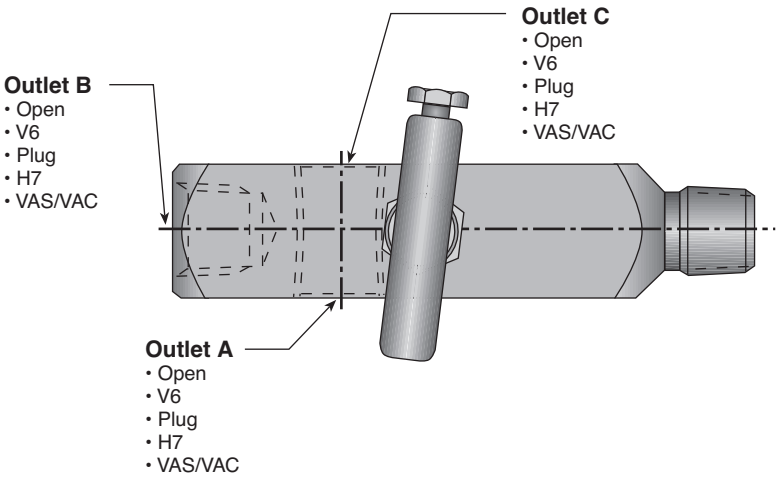

Drawing is illustrated for porting.

Notes

1. 3/16-inch [4.8 mm] diameter orifice.
2. Call factory for optional materials.
3. CS is zinc-cobalt plated to prevent corrosion (except male plain end is black oxide coated).
4. Call factory for optional connection sizes.

Copyright © 2013 Pentair. All rights reserved.

OS&Y Root Valves – M5K Soft Seat Specifications

Notes

1. 1/4-inch [6.4 mm] diameter orifice.
2. PCTFE (Polychlorotrifluoroethylene) is the exact equivalent of Kel-F®.
3. Call factory for optional materials.
4. CS is zinc-cobalt plated to prevent corrosion (except male plain end is black oxide coated).
5. Call factory for optional connection sizes.

M5K Ordering Information – Soft Seat

M5K V D S – 44LC – SG

Packing

H – GRAFOIL®
V – Teflon®

Seat[1]

V – Teflon®
K – PCTFE[2]
E – PEEK
D – Delrin®

Body Material[3]

C – CS, A105[4]
S – SS, A479-316
W – SS, A479-316L
J – Hastelloy®

Connections (Inlet/Outlet)[5]

44 – 1/2-inch MNPT x (3) 1/2-inch FNPT
46 – 3/4-inch MNPT x (3) 1/2-inch FNPT

C – Male plain end (CS is black oxide coated)
L – Long body extension (4-inch insulation)

Options

AL – Arctic Lubricant (Low Temperature Service) - not available for CS valves
CL – Chlorine Cleaning
HD – Hydrostatic Testing (100%) (MSS SP-61)
OC – Oxygen Cleaning
SG – (Sour Gas) meets the requirements of NACE MR0175/ISO 15156-3 Corrigendum 2 (for Chloride conditions ≤ 50 mg/l [ppm]) and NACE MR0103-2005 (SS only)
SG3 – (Sour Gas) meets the requirements of NACE MR0175/ISO 15156-3 Corrigendum 2 (for Chloride conditions > 50 mg/l [ppm]) - if accessories are added, consult factory for materials
SP – Special Requirements - please specify

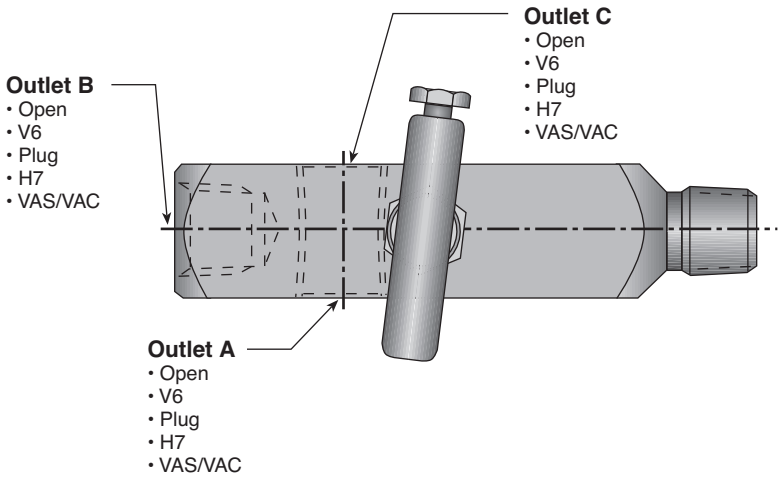

Drawing is illustrated for porting.

Copyright © 2013 Pentair. All rights reserved.

OS&Y Root Valves – M5AK Specifications

M5AK Metal and Soft Seat Dimensions, inches [mm]

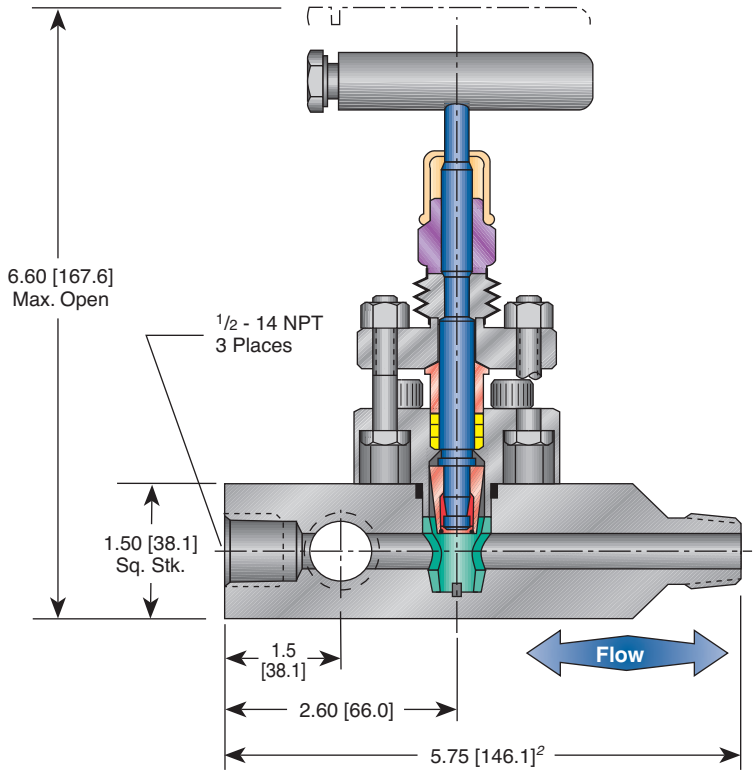

Notes

1. Approximate valve weight:
   - standard 4.0 lb [1.8 kg].
   - long 4.5 lb [2.0 kg].
   3/8-inch [9.5] diameter orifice.
   Valve C_V 3.0 maximum.
2. Long body length 7.75-inch [196.8 mm] 4-inch insulation.
3. For Hastelloy® and SG3, call factory for dimensions and weights.

Standard Materials

Metal Seat

Valve	Body	Stem	Yoke	Bolt
CS[1]	A105 CS	A581-303 SS	A351-CF8M	A574
316 SS	A479-316 SS	A276-316 SS	A351-CF8M	A574
316L SS	A479-316L SS	A276-316 SS	A351-CF8M	A574
SG[2]	A479-316 SS	Monel® R405	A351-CF8M	A574
SG3[3]	Hastelloy® C-276	Hastelloy® C-276	A494-CW12MW	A574

Soft Seat

Valve	Body	Stem	Yoke	Bolt	Seat[4]
CS[1]	A105 CS	A581-303 SS	A351-CF8M	A574	Delrin®
316 SS	A479-316 SS	A276-316 SS	A351-CF8M	A574	Delrin®
316L SS	A479-316L SS	A276-316 SS	A351-CF8M	A574	Delrin®
SG[2]	A479-316 SS	Monel® R405	A351-CF8M	A574	Delrin®
SG3[3]	Hastelloy® C-276	Hastelloy® C-276	A494-CW12MW	A574	Delrin®

Notes

1. CS is zinc-cobalt plated to prevent corrosion (except male plain end is black oxide coated).
2. SG (Sour Gas) meets the requirements of NACE MR0175/ISO 15156-3 Corrigendum 2 (for Chloride conditions ≤ 50 mg/l [ppm]) and NACE MR0103-2005.
3. SG3 (Sour Gas) meets the requirements of NACE MR0175/ISO 15156-3 Corrigendum 2 (for Chloride conditions > 50 mg/l [ppm]). If accessories are added, consult factory for materials.
4. Teflon®, PCTFE and PEEK are available.

Copyright © 2013 Pentair. All rights reserved.

OS&Y Root Valves – M5AK Specifications

Notes

1. CS is zinc-cobalt plated to prevent corrosion (except male plain end is black oxide coated).
2. SG (Sour Gas) meets the requirements of NACE MR0175/ISO 15156-3 Corrigendum 2 (for Chloride conditions ≤ 50 mg/l [ppm]) and NACE MR0103-2005.
3. PCTFE (Polychlorotrifluoroethylene) is the exact equivalent of Kel-F®.
4. SG3 (Sour Gas) meets the requirements of NACE MR0175/ISO 15156-3 Corrigendum 2 (for Chloride conditions > 50 mg/l [ppm]). If accessories are added, consult factory for materials.

Pressure and Temperature Ratings

Metal Seat

Valve	Teflon® Packed	GRAFOIL® Packed
CS[1]	1500 psig @ 500°F [103 barg @ 260°C]	1500 psig @ 850°F [103 barg @ 454°C]
316 SS	1500 psig @ 500°F [103 barg @ 260°C]	1500 psig @ 850°F [103 barg @ 454°C]
316L SS	1500 psig @ 500°F [103 barg @ 260°C]	1500 psig @ 850°F [103 barg @ 454°C]
SG[2], SG3[4]	1500 psig @ 500°F [103 barg @ 260°C]	1500 psig @ 850°F [103 barg @ 454°C]

Soft Seat

Valve	Delrin®	PCTFE[3]	PEEK	Teflon®
CS[1] 316 SS, SG[2], SG3[4]	6000 psig @ 200°F [414 barg @ 93°C]	5000 psig @ 200°F [345 barg @ 93°C]	6000 psig @ 200°F [414 barg @ 93°C] 2000 psig @ 400°F [138 barg @ 204°C]	1000 psig @ 150°F [69 barg @ 66°C] 200 psig @ 500°F [14 barg @ 260°C]
316L SS	5000 psig @ 200°F [345 barg @ 93°C]	5000 psig @ 200°F [345 barg @ 93°C]	5000 psig @ 200°F [345 barg @ 93°C] 2000 psig @ 400°F [138 barg @ 204°C]	1000 psig @ 150°F [69 barg @ 66°C] 200 psig @ 500°F [14 barg @ 260°C]

Pressure vs. Temperature – Metal Seat

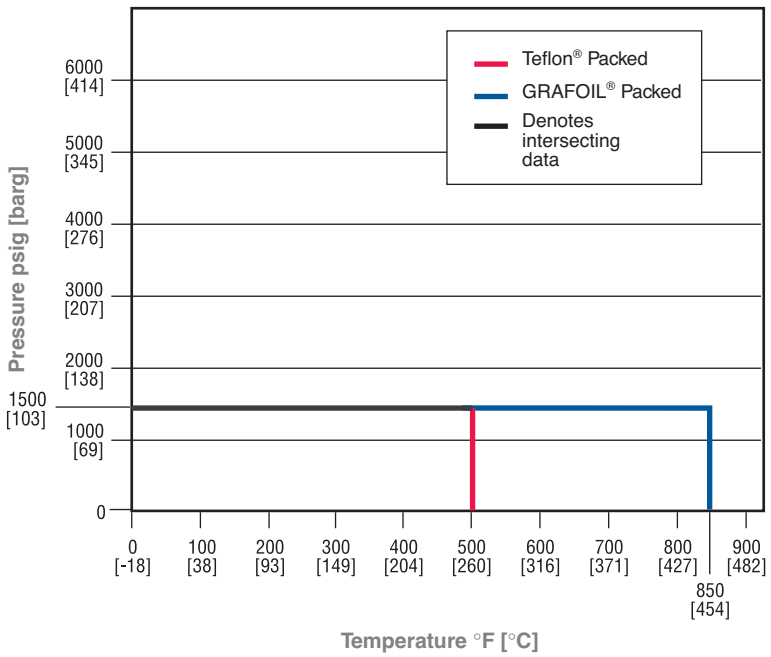

Pressure vs. Temperature – Soft Seat

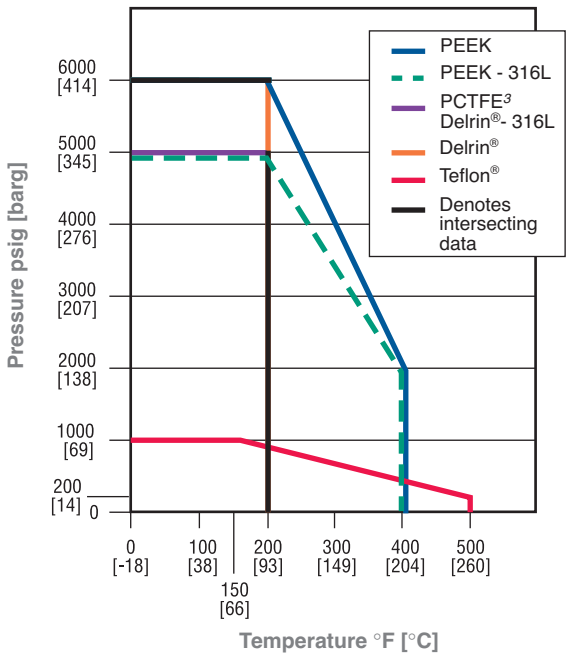

Copyright © 2013 Pentair. All rights reserved.

OS&Y Root Valves – M5AK Metal Seat Specifications

M5AK Ordering Information – Metal Seat

M5AK	H	S	S	– 44C	– SG

Packing

H – GRAFOIL®
V – Teflon®

Seat

S – 316 SS
M – Monel®

Body Material[1]

C – CS, A105
S – SS, A479-316
W – SS, A479-316L
J – Hastelloy®

Connections (Inlet/Outlet)[2]

44 – 1/2-inch MNPT x (3) 1/2-inch FNPT
46 – 3/4-inch MNPT x (3) 1/2-inch FNPT

C – Male plain end (inlet) (CS is black oxide coated)

Options

AL – Arctic Lubricant (Low Temperature Service) - not available for CS valves
CL – Chlorine Cleaning
HD – Hydrostatic Testing (100%) (MSS SP-61)
OC – Oxygen Cleaning
SG – (Sour Gas) meets the requirements of NACE MR0175/ISO 15156-3 Corrigendum 2 (for Chloride conditions ≤ 50 mg/l [ppm]) and NACE MR0103-2005 (SS only)
SG3 – (Sour Gas) meets the requirements of NACE MR0175/ISO 15156-3 Corrigendum 2 (for Chloride conditions > 50 mg/l [ppm]) - if accessories are added, consult factory for materials
SP – Special Requirements - please specify

Notes

1. Call factory for optional materials.
2. Call factory for optional connection sizes.

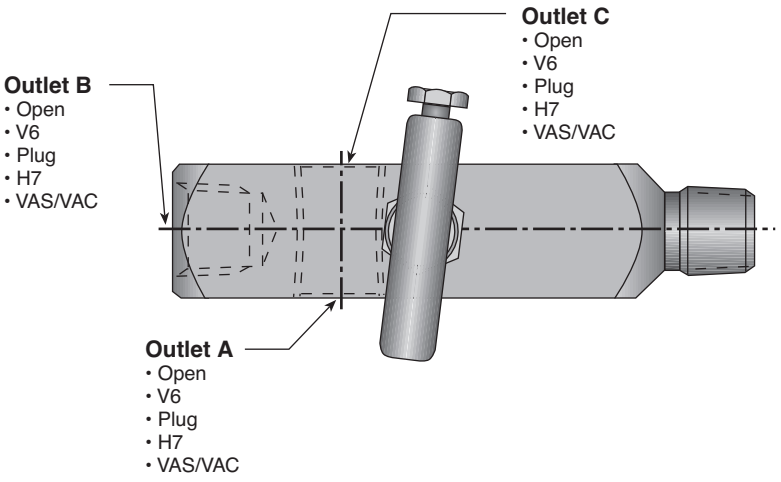

Drawing is illustrated for porting.

Copyright © 2013 Pentair. All rights reserved.

OS&Y Root Valves – M5AK Soft Seat Specifications

Notes

1. PCTFE (Polychlorotrifluoroethylene) is the exact equivalent of Kel-F®.
2. Call factory for optional materials.
3. Call factory for optional connection sizes.

M5AK Ordering Information – Soft Seat

M5AK V V S – 44C – SG

Packing

H – GRAFOIL®
V – Teflon®

Seat

V – Teflon®
D – Delrin®
E – PEEK
K – PCTFE[1]

Body Material[2]

C – CS, A105
S – SS, A479-316
W – SS, A479-316L
J – Hastelloy®

Connections (Inlet/Outlet)[3]

44 – 1/2-inch MNPT x (3) 1/2-inch FNPT
46 – 3/4-inch MNPT x (3) 1/2-inch FNPT

C – Male plain end (inlet) (CS is black oxide coated)

Options

AL – Arctic Lubricant (Low Temperature Service) - not available for CS valves
CL – Chlorine Cleaning
HD – Hydrostatic Testing (100%) (MSS SP-61)
OC – Oxygen Cleaning
SG – (Sour Gas) meets the requirements of NACE MR0175/ISO 15156-3 Corrigendum 2 (for Chloride conditions ≤ 50 mg/l [ppm]) and NACE MR0103-2005 (SS only)
SG3 – (Sour Gas) meets the requirements of NACE MR0175/ISO 15156-3 Corrigendum 2 (for Chloride conditions > 50 mg/l [ppm]) - if accessories are added, consult factory for materials
SP – Special Requirements - please specify

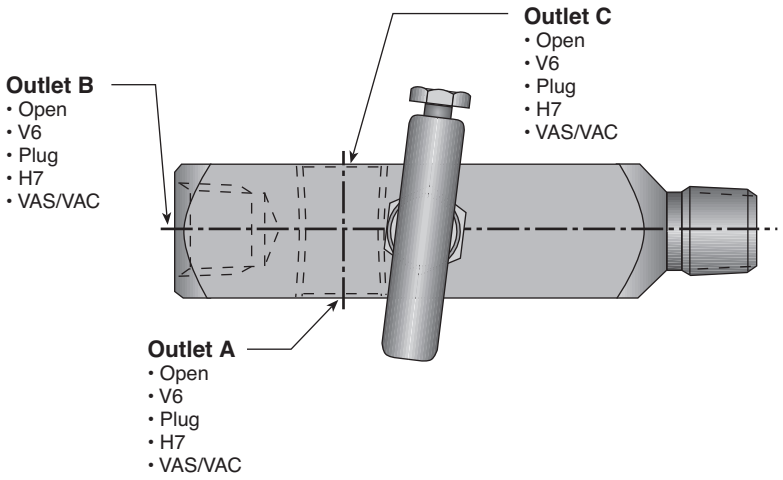

Drawing is illustrated for porting.

Copyright © 2013 Pentair. All rights reserved.

OS&Y Root Valves – M5YK Specifications

Dimensions, inches [mm]

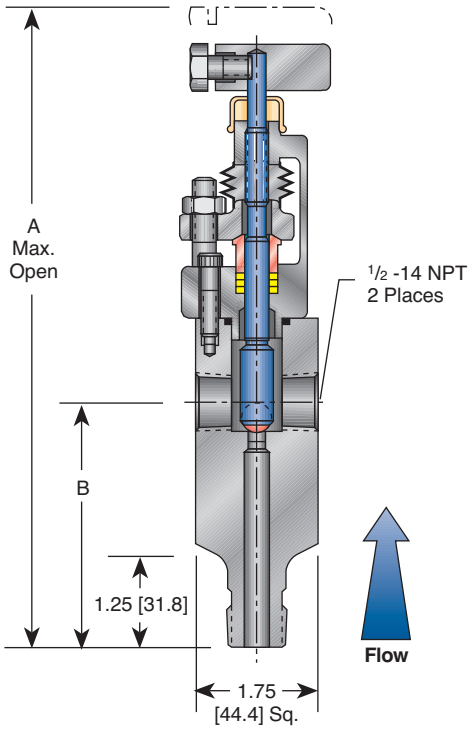

Dimensions, inches [mm]			
Body Type	A	B	Weight lb [kg]
Standard	9.20 [233.7]	3.50 [88.9]	4.5 [2.0]
Long Body	11.70 [297.2]	6.00 [152.4]	7.0 [3.2]

Standard Materials

Valve[1]	Body[2]	Stem	Ball	Yoke	Bolt
CS[3]	A696-Gr C	A276-316 SS	17-4PH	A351-CF8M	A286
316 SS	A479-316 SS	A276-316 SS	A276-316 SS	A351-CF8M	A286
316L SS	A479-316L SS	A276-316 SS	A276-316 SS	A351-CF8M	A286
SG[4]	A479-316 SS	Monel® R405	Monel® K500	A351-CF8M	A286
SG3[5, 6]	Hastelloy® C-276	Hastelloy® C-276	Elgiloy®	A494-CW12MW	A286

Notes

1. Orifice size 1/4-inch [6.4 mm]. Valve C_V 1.4 maximum.
3. Call factory for optional materials.
3. CS is zinc-cobalt plated to prevent corrosion.
4. SG (Sour Gas) meets the requirements of NACE MR0175/ISO 15156-3 Corrigendum 2 (for Chloride conditions ≤ 50 mg/l [ppm]) and NACE MR0103-2005.
5. For Hastelloy® and SG3 call factory for dimensions and weights.
6. SG3 (Sour Gas) meets the requirements of NACE MR0175/ISO 15156-3 Corrigendum 2 (for Chloride conditions > 50 mg/l [ppm]). If accessories are added, consult factory for materials.

Copyright © 2013 Pentair. All rights reserved.

OS&Y Root Valves – M5YK Specifications

Pressure and Temperature Ratings

Valve	GRAFOIL® Packing	Teflon® Packing
CS	6000 psig @ 200°F [414 barg @ 93°C] 1500 psig @ 850°F [103 barg @ 454°C]	6000 psig @ 200°F [414 barg @ 93°C] 4000 psig @ 500°F [276 barg @ 260°C]
316 SS	6000 psig @ 200°F [414 barg @ 93°C] 1500 psig @ 1000°F [103 barg @ 538°C]	6000 psig @ 200°F [414 barg @ 93°C] 4000 psig @ 500°F [276 barg @ 260°C]
316L SS	5000 psig @ 200°F [345 barg @ 93°C] 1500 psig @ 850°F [103 barg @ 454°C]	5000 psig @ 200°F [345 barg @ 93°C] 4000 psig @ 500°F [276 barg @ 260°C]
SG[1], SG3[2]	6000 psig @ 200°F [414 barg @ 93°C] 1500 psig @ 1000°F [103 barg @ 538°C]	6000 psig @ 200°F [414 barg @ 93°C] 4000 psig @ 500°F [276 barg @ 260°C]

Notes

1. SG (Sour Gas) meets the requirements of NACE MR0175/ISO 15156-3 Corrigendum 2 (for Chloride conditions ≤ 50 mg/l [ppm]) and NACE MR0103-2005.
2. SG3 (Sour Gas) meets the requirements of NACE MR0175/ISO 15156-3 Corrigendum 2 (for Chloride conditions > 50 mg/l [ppm]). If accessories are added, consult factory for materials.

Pressure vs. Temperature

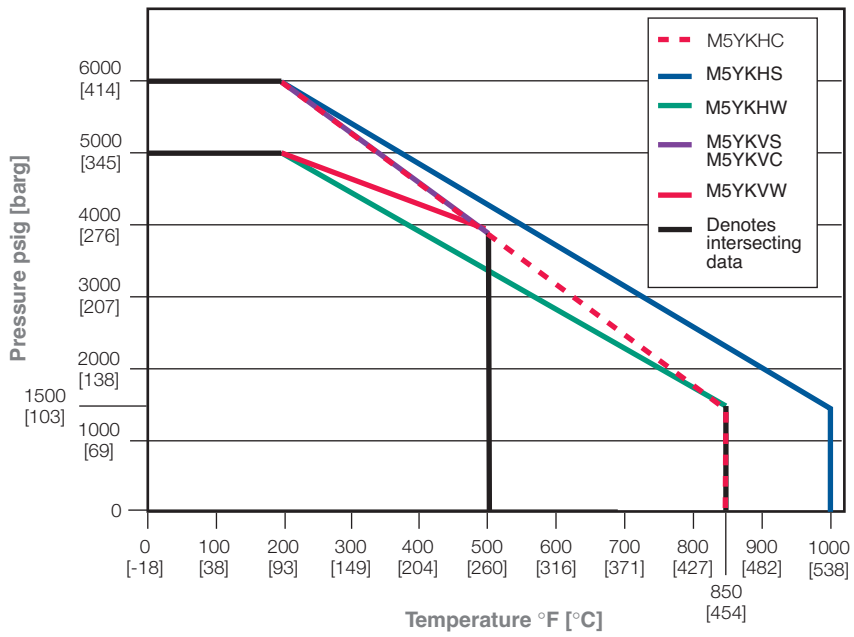

Copyright © 2013 Pentair. All rights reserved.

OS&Y Root Valves – M5YK Specifications

Ordering Information

M5YK H I S – 44LC – SG

Packing

H – GRAFOIL®
V – Teflon®

Seat (Orifice diameter 1/4-inch [6.4 mm])

I – Integral (standard)
S – 316 SS Insert
M – Monel® Insert
T – Stellite Insert/Stellite Ball

Body Material[1]

C[2] – CS, A696 Gr C (A105)
S – SS, A479-316
W – SS, A479-316L
J – Hastelloy®

Connections (Inlet/Outlet)

44 – 1/2-inch MNPT x (2) 1/2-inch FNPT
46 – 3/4-inch MNPT x (2) 1/2-inch FNPT
48 – 1-inch MNPT x (2) 1/2-inch FNPT

C – Male plain end (inlet) (CS is black oxide coated)
L – Long body extension (4-inch [102 mm] insulation) (not available as -44L)

Options

AL – Arctic Lubricant (Low Temperature Service) - not available for CS valves
P – Power, ASME B31.1 and B31.3 (GRAFOIL® packing with integral seat only) (consult factory for ratings) meets MSS SP-105
SG – (Sour Gas) meets the requirements of NACE MR0175/ISO 15156-3 Corrigendum 2 (for Chloride conditions ≤ 50 mg/l [ppm]) and NACE MR0103-2005 (SS only)
SG3 – (Sour Gas) meets the requirements of NACE MR0175/ISO 15156-3 Corrigendum 2 (for Chloride conditions > 50 mg/l [ppm]) - if accessories are added, consult factory for materials
SP – Special Requirements - please specify

Notes

1. Call factory for optional materials.
2. A696 Gr C is the bar stock equivalent to A105 carbon steel.

Copyright © 2013 Pentair. All rights reserved.

Gauge Valve Accessories – Bleed Tee (BT)

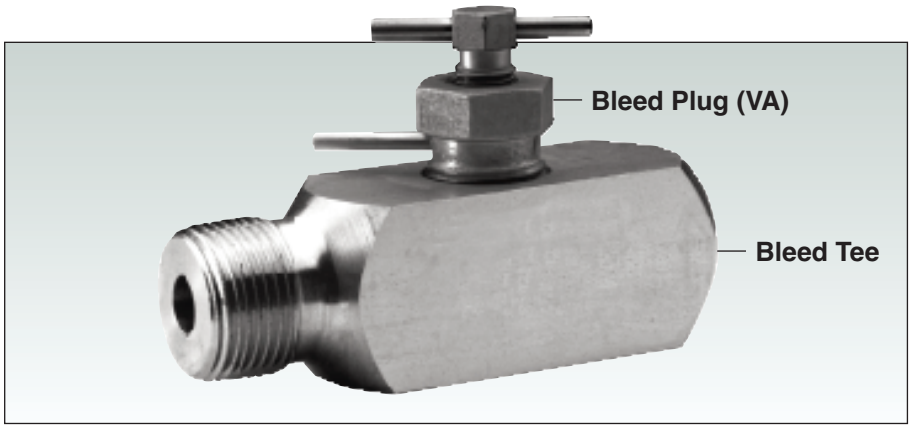

Product Overview

The Anderson Greenwood Bleed Tee is a single male inlet, triple female outlet piping tee. It is generally used with the process root valve to simplify downstream piping and reduce the number of potential leak points.

The Bleed Tee can be used with any 1/2-inch or 3/4-inch valve in an instrument piping system and allows either vertical or horizontal pressure gauge mounting. As an option, a bleed plug (as shown above) can be assembled into the tee to provide a means of relieving pressure for maintenance purposes.

Features and Benefits

- **Multiple outlets** reduce piping/tubing leak points and permit a pressure gauge or other device to be correctly positioned regardless of tee orientation.
- **Compact installation** shortens moment arm, reducing weight and vibration factors. With stress limited, the chances of breakage and leaks are greatly lowered.
- **Straight-through flow path** provides high flow capacity, bi-directional flow, and rodding capabilities.
- **Bleed plug:** (optional) in one outlet, shown above, serves to reduce pressure for instrument removal, facilitating maintenance.
- **Direction tube** located in bleed port.

Copyright © 2013 Pentair. All rights reserved.

Gauge Valve Accessories – Bleed Tee Specifications

Bleed Tee Dimensions, inches [mm]

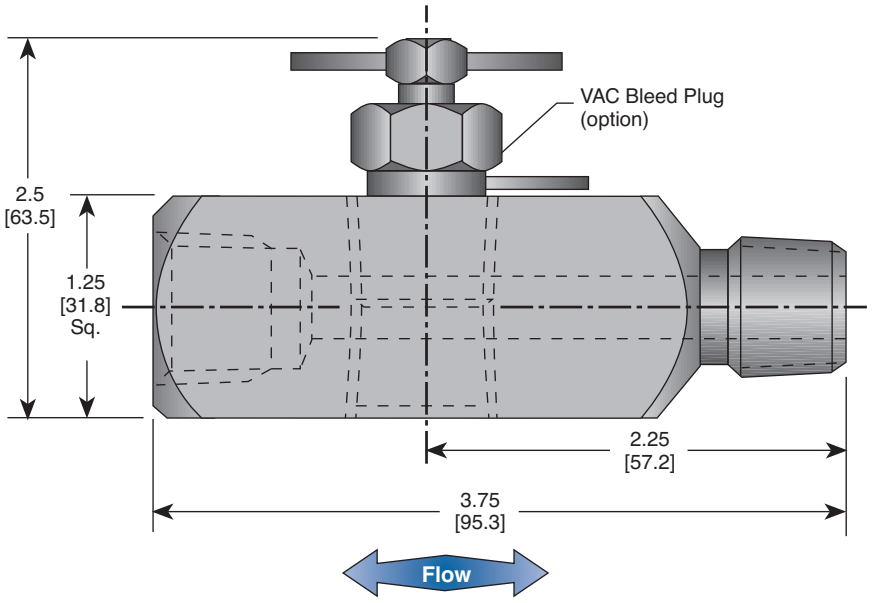

Standard Materials

Valve[1]	Body	Bleed Plug	Bleed Stem
CS[2]	A105 CS	A108 CS	A581-303 SS
316 SS	A479 316 SS	A479 316 SS	A276-316 SS
SG[4]	A479 316 SS	A479 316 SS	Monel® R405
SG3[5]	Hastelloy® C-276	Hastelloy® C-276	Hastelloy® C-276

Pressure and Temperature Ratings

Bleed Tee Body

CS[2]	6000 psig @ 200°F [414 barg @ 93°C]	1500 psig @ 850°F [103 barg @ 454°C]
316 SS, SG[4], SG3[5]	6000 psig @ 200°F [414 barg @ 93°C]	1500 psig @ 1000°F [103 barg @ 538°C]

Bleed Tee with Bleed Plug

CS[2]	6000 psig @ 200°F [414 barg @ 93°C]	4000 psig @ 500°F [276 barg @ 200°C]
316 SS, SG[4], SG3[5]	6000 psig @ 200°F [414 barg @ 93°C]	1500 psig @ 1000°F [103 barg @ 538°C]

Notes

1. Valve weight: 1.0 lb [.45 kg] each.
   Orifice diameter of bleed tee
   0.375-inch [9.5 mm].
   Orifice diameter of bleed valve
   0.125-inch [3.2 mm].
2. CS is zinc-cobalt plated to prevent corrosion.
3. For Hastelloy® and SG3 call factory for dimensions and weights.
4. SG (Sour Gas) meets the requirements of NACE MR0175/ISO 15156-3 Corrigendum 2 (for Chloride conditions ≤ 50 mg/l [ppm]) and NACE MR0103-2005.
5. SG3 (Sour Gas) meets the requirements of NACE MR0175/ISO 15156-3 Corrigendum 2 (for Chloride conditions > 50 mg/l [ppm]). If accessories are added, consult factory for materials.

Copyright © 2013 Pentair. All rights reserved.

Gauge Valve Accessories – Bleed Tee Specifications

Pressure vs. Temperature

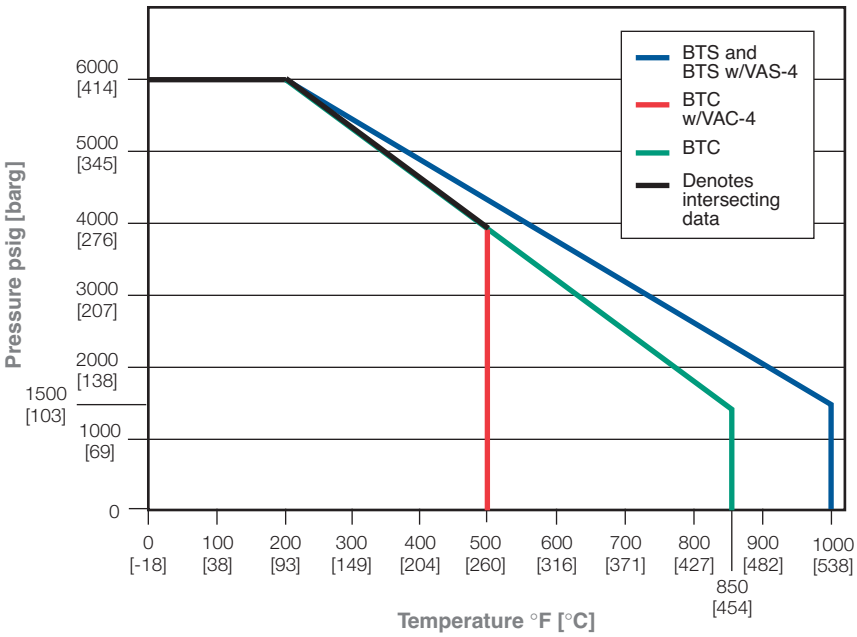

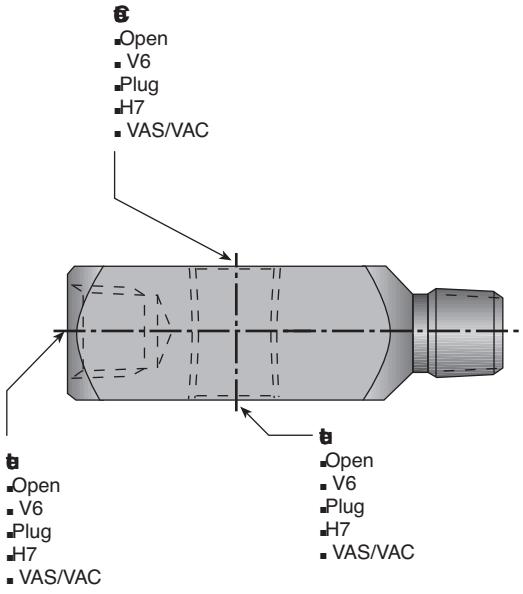

Ordering Information

BT C – 44 – VAC-4

Body Material

C – CS, A105
S – SS, A479-316
J – Hastelloy®

Connections (Inlet/Outlet)

44 – 1/2-inch MNPT x (3) 1/2-inch FNPT
46 – 3/4-inch MNPT x (3) 1/2-inch FNPT

Options

VAC-4 – 1/2-inch CS Bleed Plug
VAS-4 – 1/2-inch SS Bleed Plug
VAJ-4 – 1/2-inch Hastelloy® Bleed Plug
SG – (Sour Gas) meets the requirements of NACE MR0175/ISO 15156-3 Corrigendum 2 (for Chloride conditions ≤ 50 mg/l [ppm]) and NACE MR0103-2005 (SS only)
SG3 – (Sour Gas) meets the requirements of NACE MR0175/ISO 15156-3 Corrigendum 2 (for Chloride conditions > 50 mg/l [ppm]) - if accessories are added, consult factory for materials

Copyright © 2013 Pentair. All rights reserved.

Gauge Valve Accessories

V6 Bleeder Valve

The V6 Bleeder Valve utilizes H5 miniature valve bonnet technology. The H5 bonnet and seat are integrated with a hex plug body to produce a bleeder valve that vents to atmosphere and has bubble-tight shutoff.

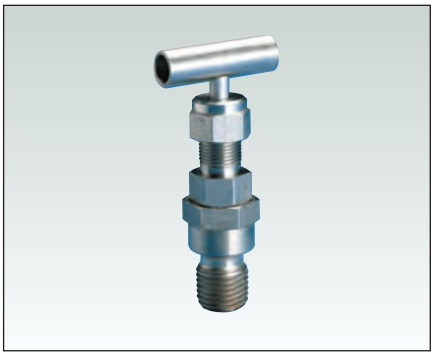

Pressure and Temperature Ratings

Brass

Hard seat/Teflon® seal	3000 psig @ 400°F	[207 barg @ 204°C]
Hard seat/O-ring seal Soft seat/Either seal	3000 psig @ 200°F	[207 barg @ 93°C]

CS[1], SS, SG[3] and SG[4]

Hard seat/Teflon® seal	6000 psig @ 200°F 4000 psig @ 500°F	[414 barg @ 93°C] [276 barg @ 260°C]
Hard seat/O-ring seal	6000 psig @ 200°F	[414 barg @ 93°C]
Soft seat/Either seal	3000 psig @ 200°F	[207 barg @ 93°C]

Standard Product Selection

	Connections	O-ring		Teflon® Packed	
	Inlet	Hard	Soft	Hard	Soft
Brass	1/2-inch NPT	V6RIB-4	V6RDB-4	V6VIB-4	V6VDB-4
CS[1]	1/2-inch NPT	V6RIC-4	V6RDC-4	V6VIC-4	V6VDC-4
SS, SG[3], SG3[4]	1/2-inch NPT	V6RIS-4	V6RDS-4	V6VIS-4	V6VKS-4

VA Bleed Plug[2]

The VA bleed plug provides an economic means to bleed process pressure trapped between the M5 and instrument.

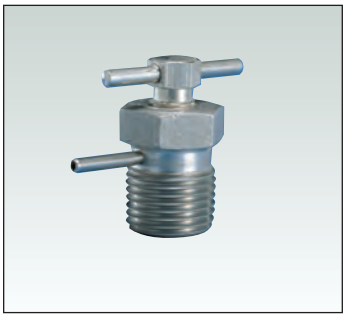

Model Number

CS[1]	316 SS	Monel®	Sour Gas[3, 4]
VAC-4	VAS-4	VAM-4	VAS-4-SG VAS-4-SG3

Notes

1. CS is zinc-cobalt plated to prevent corrosion.
2. Standard 1/2-inch NPT plug made from hex barstock. Available in CS, 316 SS or Monel®.
3. SG (Sour Gas) meets the requirements of NACE MR0175/ISO 15156-3 Corrigendum 2 (for Chloride conditions ≤ 50 mg/l [ppm]) and NACE MR0103-2005.
4. SG3 (Sour Gas) meets the requirements of NACE MR0175/ISO 15156-3 Corrigendum 2 (for Chloride conditions > 50 mg/l [ppm]). If accessories are added, consult factory for materials.

Copyright © 2013 Pentair. All rights reserved.

Gauge Valve Accessories

Seat Resurfacing Tool

The flow of abrasive fluids may, over time, score the seating surface of the valve body. The seat resurfacing tool will re-machine this surface and allow the valve to once again deliver bubble-tight shutoff.

Model Number	Description
SRT-1	Seat resurfacing tool for 3/16-inch [4.8 mm] diameter orifice metal seat valves

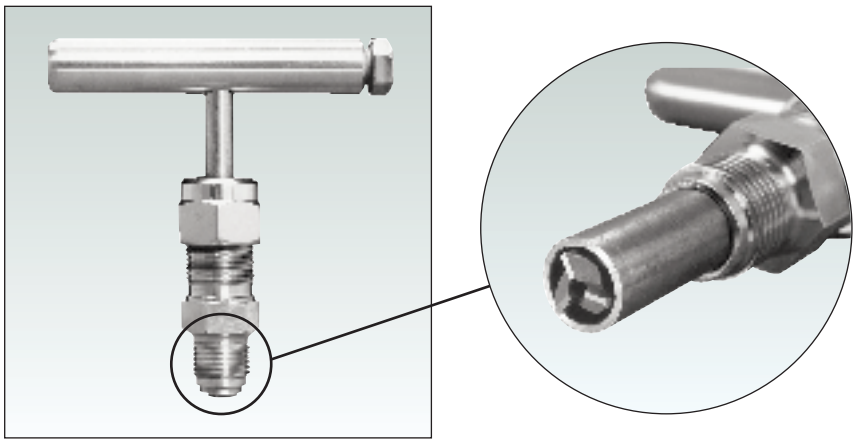

Bonnet Lock (patent protected)

The Bonnet Lock (BL) prevents accidental loosening of the bonnet-to-body seal, and is a low-cost alternative to a union bonnet. A high-strength short bonnet pin aligns a hex collar over the bonnet. A standard SS hollow-point set-screw or lock nut locks the collar against the bonnet. Tests indicate that the minimum torque required to break the collar loose is greater than the torque required to twist off the valve stem. Available only on GRAFOIL® bonnet assemblies.

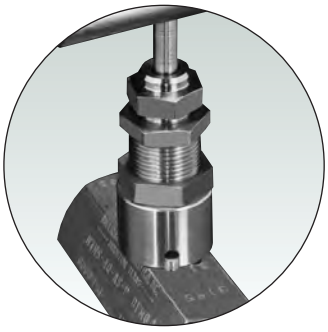

GRAFOIL® Packed Bonnet Lock Nut

Gauge Adapters

Designed for use with any gauge valve to increase site versatility, the GA swivel gauge adapter allows positioning of pressure gauges in any direction through 360 degrees via a compression fitting.

Gauge Syphons

Designed to replace the old pigtail type of syphon, the CT7 provides a thermal barrier between hot vapors and the pressure instrument. The CT7 reduces the amount of potential gauge whip on vibrating lines by bringing the gauge closer to the process connection. Also used for sealing pressure gauges from aqueous solutions using kerosene or other immiscible fluid with lower gravity than I.O.



Gauge Adapters



Gauge Syphons

Copyright © 2013 Pentair. All rights reserved.

Gauge Valve Accessories

Dimensions, inches [mm]

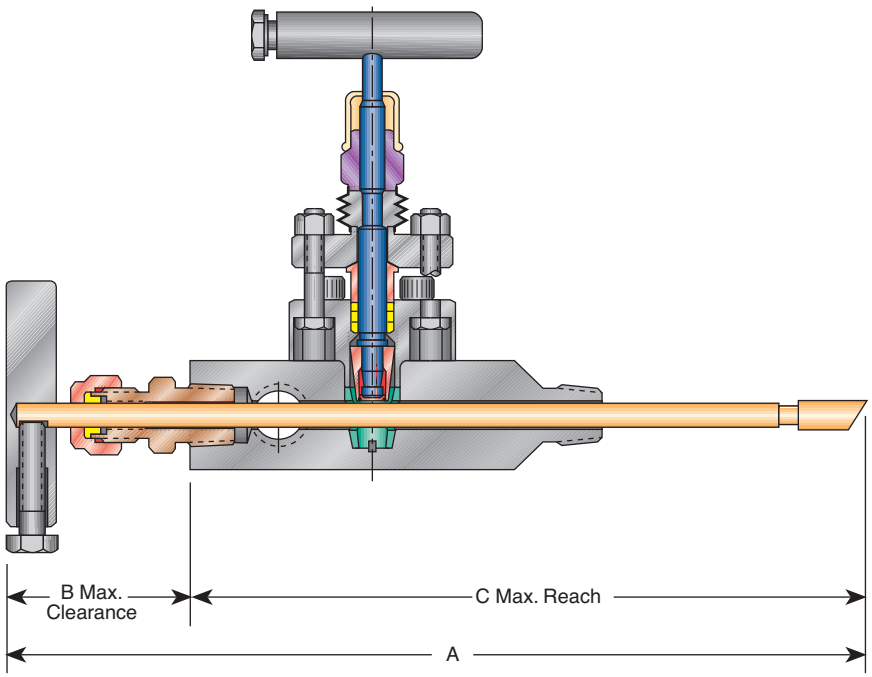

Rod-Out Device with M5AK Gauge Valve

Rod-Out Device

The Rod-Out is a device to rod-through passages that have become restricted. It is designed to be used while the valve is not under pressure. It can be left in place while the valve is under pressure. The centerless ground rod has a hardened cutting end larger than the shaft to prevent 'blowout' through the adjustable packing gland. The Rod-Out is available with a 3/16-inch [4.8 mm] or 3/8-inch [9.5 mm] diameter rod.

Rod-Out Device Specifications[1], inches [mm]

Model Number	Max. Dia.[2] Bore	Rod[3]	Gland[4]	Inlet Connection	Dimensions[3] A	B	C
RTV3C-N4[5]	3/8" [9.5]	A108 CS[5]	A108 CS	1/2" NPT	18.1 [459]	15.9 [404]	17.8 [452]
RTV3S-N4	3/8" [9.5]	316 SS	316 SS	1/2" NPT	18.1 [459]	15.9 [404]	17.8 [452]
RTV3M-N4	3/8" [9.5]	Monel® R405	Monel® R405	1/2" NPT	18.1 [459]	15.9 [404]	17.8 [452]
RTV1C-N4[5]	3/16" [4.8]	4130 SS	A108 CS	1/2" NPT	12.1 [397]	10.1 [256]	11.8 [300]
RTV1S-N4	3/16" [4.8]	316 SS	316 SS	1/2" NPT	12.1 [397]	10.1 [256]	11.8 [300]
RTV1M-N4	3/16" [4.8]	Monel® R400	Monel® R405	1/2" NPT	12.1 [397]	10.1 [256]	11.8 [300]

Notes

1. Maximum recommended usage:
   500 psig @ 100°F [35 barg @ 37°C].
   100 psig @ 500°F [7 barg @ 260°C].
2. Rod tip for 3/8-inch [9.5 mm] bore is 0.312-inch [7.9 mm] diameter.
   Rod tip for 3/16-inch [4.8 mm] bore is 0.141-inch [3.0 mm] diameter.
3. For special rod lengths, materials or connections, consult factory.
4. Teflon® packing.
5. 3/8-inch [9.5 mm] diameter device is 1.0 lb [0.45 kg] each.
   3/16-inch [4.8 mm] diameter device is 0.5 lb [0.23 kg] each.
6. CS is zinc-cobalt plated to resist corrosion.

Copyright © 2013 Pentair. All rights reserved.

Gauge Valve Accessories

Dimensions, inches [mm]

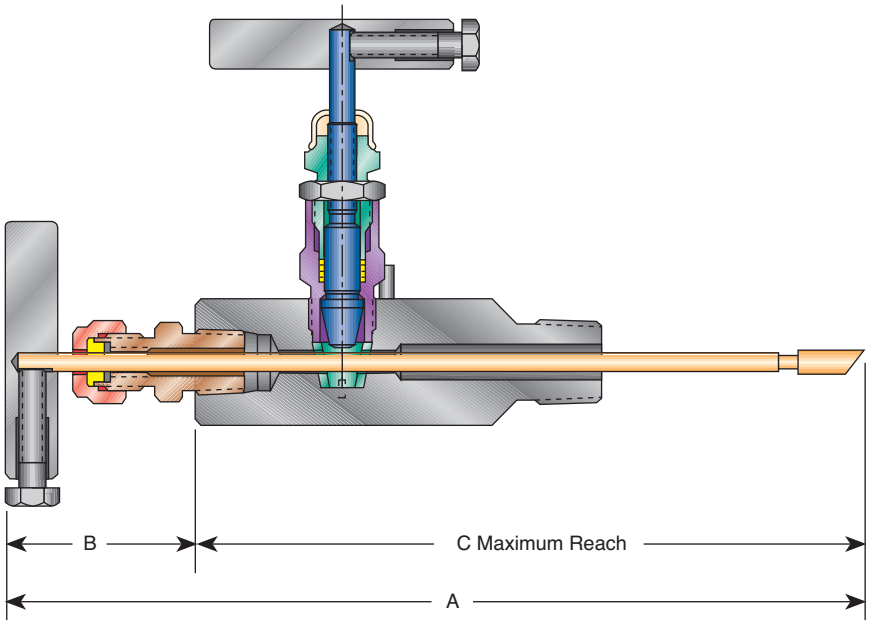

Rod-Out Device with M5 Gauge Valve

Rod-Out Device Ordering Information

RTV[1] 3 S – N4

Bore Diameter

1 – 3/16-inch [4.8 mm]
3 – 3/8-inch [9.5 mm]

Material

C – CS (A108) (3/8-inch) [9.5 mm]
(4130) (3/16-inch) [4.8 mm]
S – 316 SS
M – Monel® R405 (3/8-inch) [9.5 mm]
Monel® 400 (3/16-inch) [4.8 mm]

Connections

N4 – 1/2-inch MNPT
A3 – 3/8-inch AGCO Tube
A4 – 1/2-inch AGCO Tube

Note

1. V - Teflon® packing gland.

Copyright © 2013 Pentair. All rights reserved.

January 2013

67C Series Instrument Supply Regulators

- **Designed for Digital Instrumentation**
- **Optional Smart Bleed™ Construction**
- **Optional Stainless Steel Construction**
- **Compact and Light Weight**
- **No Air Loss**
- **Easy Maintenance**
- **Optional Integral Filter**
- **Optional Internal Relief Valve**
- **Rugged Construction**



W7412

67CF SERIES FILTER REGULATOR SHOWN WITH OPTIONAL PRESSURE GAUGE



W8438

67C SERIES INSTRUMENT SUPPLY REGULATOR



W7423_1

67CF SERIES REGULATOR USED AS A SUPPLY REGULATOR FOR DIGITAL INSTRUMENTATION

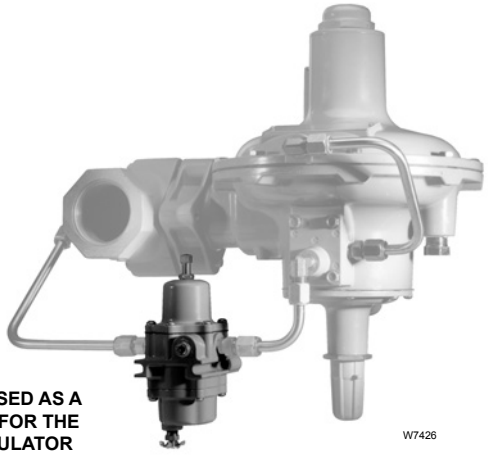

W7426

67CF SERIES REGULATOR USED AS A PILOT SUPPLY REGULATOR FOR THE TYPE 299H PRESSURE REGULATOR

Figure 1. *67C Series Instrument Supply Regulators*

D102656X012

Specifications

The Specifications section gives some general specifications for the 67C Series regulator. A label on the spring case gives the control spring range for a given regulator as it comes from the factory.

Available Constructions
See Table 2

Body Size, Inlet, and Outlet Connection Style
1/4 NPT

Construction Materials
See Table 3

Maximum Inlet Pressure (Body Rating)(1)
All except Types 67CS and 67CSR: 250 psig / 17.2 bar
Types 67CS and 67CSR: 400 psig / 27.6 bar

Outlet Pressure Ranges
See Table 1

Maximum Emergency Outlet Pressure(1)
50 psi / 3.4 bar over outlet pressure setting

Flow Capacities
See Table 4

Wide-Open Flow Coefficients
Main Valve: C_g: 11.7; C_v: 0.36; C_1: 32.2
Internal Relief Valve: C_g: 1.45; C_v: 0.045; C_1: 32.8

IEC Sizing Coefficients
Main Valve: X_T: 0.66; F_L: 0.89; F_D: 0.50

Accuracy
Inlet Sensitivity for Nitrile (NBR) and Silicone (VMQ) Elastomers: Less than 0.2 psig / 14 mbar change in outlet pressure for every 25 psig / 1.7 bar change in inlet pressure
Inlet Sensitivity for Fluorocarbon (FKM) Elastomers: Less than 0.4 psig / 28 mbar change in outlet pressure for every 25 psig / 1.7 bar change in inlet pressure
Repeatability for Nitrile (NBR) and Silicone (VMQ) Elastomers: 0.1 psig / 7 mbar(2)
Repeatability for Fluorocarbon (FKM) Elastomers: 0.3 psig / 21 mbar(2)
Air Consumption: Testing repeatedly shows no discernible leakage

Types 67CR, 67CSR, 67CFR, and 67CFSR Internal Relief Performance
Low capacity for minor seat leakage only, other overpressure protection must be provided if inlet pressure can exceed the maximum pressure rating of downstream equipment or exceeds maximum outlet pressure rating of the regulator.

Approximate Weights
Types 67C, 67CR, 67CF, and 67CFR:
1 pound / 0.5 kg
Types 67CS and 67CSR:
2.5 pounds / 1.1 kg
Types 67CFS and 67CFSR:
4 pounds / 1.8 kg

Smart Bleed™ Check Valve Setpoint
6 psi / 0.41 bar differential

Pressure Registration
Internal

Drain Valve and Spring Case Vent Location
Aligned with inlet standard, other positions optional

Temperature Capabilities(1)
With Nitrile (NBR)
Standard Bolting: -20 to 180°F / -29 to 82°C
Stainless Steel Bolting: -40 to 180°F / -40 to 82°C
With Fluorocarbon (FKM):
Polyethylene Filter(5) ***(Standard)****:* 0 to 180°F / -18 to 82°C
Polyvinylidene (PVDF), Stainless Steel, or Glass Filter (Optional): 0 to 300°F / -18 to 149°C
With Silicone (VMQ)(3) Diaphragm and Low Temperature bolting: -60 to 180°F / -51 to 82°C
With Gauges: -40 to 180°F / -40 to 82°C

Types 67CF, 67CFR, 67CFS, and 67CFSR Filter Capabilities
Free Area: 12 times pipe area
Micron Rating:
Polyethylene Filter(5) ***(Standard)****:* 5 microns
Glass Fiber Filter (Optional): 5 microns
PVDF Filter (Optional): 40 microns
Stainless Steel Filter (Optional): 40 microns

Options
All Types
- Handwheel adjusting screw
- Inlet screen
- NACE MR0175(4) or NACE MR0103 construction
- Panel mount (includes spring case with 1/4 NPT vent, handwheel, and panel mounting nut)
- Closing cap (available on spring case with 1/4 NPT vent)
- Fluorocarbon (FKM) elastomers for high temperatures and/or corrosive chemicals
- Silicone (VMQ) elastomers for cold temperatures
- Fixed Bleed Restriction
- Triple scale outlet pressure gauge (Brass or Stainless steel)
- Stainless steel stem on the valve plug
- Tire valve or pipe plug in second outlet

Types 67CFR and 67CFSR only
- Smart Bleed internal check valve
- Large dripwell with manual or automatic drain

Types 67CF and 67CFR only
- Stainless steel drain valve

1. The pressure/temperature limits in this Bulletin and any applicable standard or code limitation should not be exceeded.
2. Repeatability is the measure of the regulator's ability to return to setpoint consistently when traveling from steady state to transient to steady state.
3. Silicone (VMQ) is not compatible with hydrocarbon gas.
4. Product complies with the material requirements of NACE MR0175. Environmental limits may apply.
5. Do not use in high aromatic hydrocarbon service.

Table 1. *Outlet Pressure Ranges and Control Spring Data*

TYPE	OUTLET PRESSURE RANGES		CONTROL SPRING DATA						
			Color	Material	Part Number	Wire Diameter		Free Length	
	psig	bar				Inch	mm	Inch	mm
67C, 67CR, 67CF, and 67CFR	0 to 20	0 to 1.4	Green stripe	Music Wire	GE07809T012	0.135	3.43	1.43	36.2
	0 to 35	0 to 2.4	Silver		T14059T0012	0.156	3.96	1.43	36.2
	0 to 60	0 to 4.1	Blue stripe		T14058T0012	0.170	4.32	1.43	36.2
	0 to 125	0 to 8.6	Red stripe		T14060T0012	0.207	5.26	1.43	36.2
	0 to 35	0 to 2.4	Silver stripe	Inconel®	T14113T0012	0.156	3.96	1.43	36.2
	0 to 60	0 to 4.1	Blue		T14114T0012	0.172	4.37	1.43	36.2
	0 to 125	0 to 8.6	Red		T14115T0012	0.207	5.26	1.43	36.2
67CS, 67CSR, 67CFS, and 67CFSR	0 to 20	0 to 1.3	Green	Inconel®	10C1729X012	0.135	3.43	1.50	38.1
	0 to 35	0 to 2.4	Silver stripe		T14113T0012	0.156	3.96	1.43	36.2
	0 to 60	0 to 4.1	Blue		T14114T0012	0.172	4.37	1.43	36.2
	0 to 125	0 to 8.6	Red		T14115T0012	0.207	5.26	1.43	36.2
	0 to 150	0 to 10.3	Black		10C1730X012	0.250	6.35	1.77	44.9

Inconel® is a marked own by Special Metals Corporation.

Introduction

The 67C Series regulators are typically used to provide constantly controlled, reduced pressures to pneumatic and electro-pneumatic controllers and other instruments. These direct-operated regulators are suitable for most air or gas applications. Other applications include providing reduced pressures to air chucks, air jets, and spray guns.

Features

- **Compact**—The 67C Series regulators are engineered for outstanding performance in a compact, lightweight package.
- **Panel Mounting**—Panel mount construction includes spring case with 1/4 NPT vent, handwheel adjusting screw, and mounting nut.
- **Instrument Supply Regulator**—The Types 67CF, 67CFR, 67CFS, and 67CFSR provide a clean air supply to a variety of pneumatic and electro-pneumatic instrumentation.
- **Digital Instrument Supply Regulator**—Designed to meet the accuracy, repeatability, and hysteresis demands of digital instrumentation.
- **Pilot Supply Regulator**—Improves the accuracy of two-path control regulators by reducing inlet sensitivity caused by fluctuating inlet pressures.
- **Sour Gas Service Capability**—NACE MR0175 and MR0103 compliant construction available.
- **Optional Stainless Steel Construction**—The Types 67CS, 67CSR, 67CFS, and 67CFSR provide high resistance to corrosion, which is especially beneficial for offshore applications.
- **Full Usable Capacity**—Fisher® regulators are laboratory tested. 100% of the published capacities can be used with confidence.
- **Internal Relief**—The Types 67CR, 67CSR, 67CFR, and 67CFSR have an internal relief valve with a soft seat for reliable shutoff with no discernible leakage. These regulators are recommended for conserving plant air.
- **Smart Bleed™**—Opens to exhaust downstream pressure when inlet pressure drops below outlet pressure. Recommended for dead-end service.
- **Integral Filter**—The Types 67CF, 67CFR, 67CFS, and 67CFSR have an integral filter ensuring clean downstream air supply.
- **Ease of Maintenance**—No special tools required to perform maintenance, and all maintenance can be performed with the regulator in the line. Filter elements are easily replaced. The one-piece valve plug cartridge allows easy inspection and replacement.
- **Rugged Construction**—The 67C Series regulators are engineered for longer service life with minimal maintenance requirements.
- **Second Outlet**—Body side outlet for pressure gauge or other uses.
- **Powder Paint Coating**—Types 67C, 67CR, 67CF, and 67CFR are powder paint coated, offering impact, abrasion, and corrosion resistance. Stainless steel regulators (Types 67CS, 67CSR, 67CFS, and 67CFSR) are not painted.
- **Corrosion Resistant Fasteners**—Bolting and adjusting screw are double zinc-chromated for enhanced corrosion resistance. Optional stainless steel bolting and adjusting screw are also available.

Principle of Operation (Figure 2)

Downstream pressure is registered internally on the lower side of the diaphragm. When the downstream pressure is at or above the set pressure, the valve plug is held against the orifice and there is no flow through the regulator. When demand increases, downstream pressure drops slightly allowing the spring to extend, moving the stem down and the valve plug away from the orifice. This allows flow through the regulator.

Table 2. *Available Constructions*

TYPE	CONSTRUCTION FEATURES		OPTIONAL FEATURES			BODY MATERIAL	
	With Internal Relief	With Filter	Smart Bleed™ Internal Check Valve Airset	Drain Valve	Fixed Bleed	Aluminum	Stainless Steel
67C						X	
67CR	X				X	X	
67CS							X
67CSR	X				X		X
67CF		X		X		X	
67CFR	X	X	X	X	X	X	
67CFS		X		X			X
67CFSR	X	X	X	X	X		X

Table 3. *Construction Materials*

MATERIALS	TYPE			
	67C and 67CR	67CF and 67CFR	67CS and 67CSR	67CFS and 67CFSR
BODY AND SPRING CASE	Aluminum (ASTM B85/Alloy 380)		CF8M/CF3M Stainless steel	
BOTTOM PLATE	316 Stainless steel	- - - -	316 Stainless steel	- - - -
PUSHER POST AND VALVE CARTRIDGE	Polyester resin			
UPPER SPRING SEAT	Zinc-plated steel		316 Stainless steel	
LOWER SPRING SEAT, DIAPHRAGM PLATE	Chromate conversion coated Aluminum		316 Stainless steel	
CONTROL SPRING	Plated Steel or Inconel® (NACE)		Inconel®	
VALVE PLUG	Brass stem with Nitrile (NBR) plug, Aluminum stem with Nitrile (NBR) or Fluorocarbon (FKM) plug, or Stainless steel stem with Nitrile (NBR) plug		316 Stainless steel stem with Nitrile (NBR) or Fluorocarbon (FKM) plug	
VALVE SPRING	Stainless steel or Inconel® (NACE)		Inconel®	
DIAPHRAGM AND O-RINGS	Nitrile (NBR), Fluorocarbon (FKM), or Silicone (VMQ)(1)			
SOFT SEAT AND GASKETS	Nitrile (NBR) or Fluorocarbon (FKM)			
BOLTING, ADJUSTING SCREW, LOCKNUT	Zinc-plated steel or Stainless steel		Stainless steel	
HANDWHEEL	Zinc-plated steel screw with resin handwheel			
FILTER RETAINER	- - - -	Plated Steel	- - - -	316 Stainless steel
FILTER ELEMENT	- - - -	Polyethylene, Glass fiber, Stainless steel, or PVDF (Plastic)	- - - -	Polyethylene, Glass fiber, 316 Stainless steel, or PVDF (Plastic)
DRAIN VALVE	- - - -	Brass or Stainless steel	- - - -	316 Stainless steel or 18-8 Stainless steel
DRIPWELL	- - - -	Aluminum (ASTM B85/Alloy 380)	- - - -	CF8M/CF3M Stainless steel

1. Silicone (VMQ) diaphragm is only available with internal relief (Types 67CR, 67CSR, 67CFR, and 67CFSR).
Inconel® is a marked own by Special Metals Corporation.

Internal Relief (Types 67CR, 67CSR, 67CFR, and 67CFSR)

If for some reason, outside of normal operating conditions, the downstream pressure exceeds the setpoint of the regulator, the force created by the downstream pressure will lift the diaphragm until the diaphragm is lifted off the relief seat. This allows flow through the token relief. The relief valve on the Type 67CR, 67CSR, 67CFR, or 67CFSR is an elastomer plug that prevents leakage of air from the downstream to atmosphere during normal operation, thereby conserving plant air.

Smart Bleed Airset

In some cases, it is desired to exhaust downstream pressure if inlet pressure is lost or drops below the setpoint of the regulator. For example, if the regulator is installed on equipment that at times has no flow demand but is expected to backflow on loss of inlet pressure. The Type 67CFR or 67CFSR can be ordered with the Smart Bleed option which includes an internal check valve for this application. During operation, if inlet pressure is lost, or decreases below the setpoint of the regulator, the downstream pressure will back flow upstream through the regulator and check valve. This option eliminates the need for a fixed bleed downstream of the regulator, thereby conserving plant air.

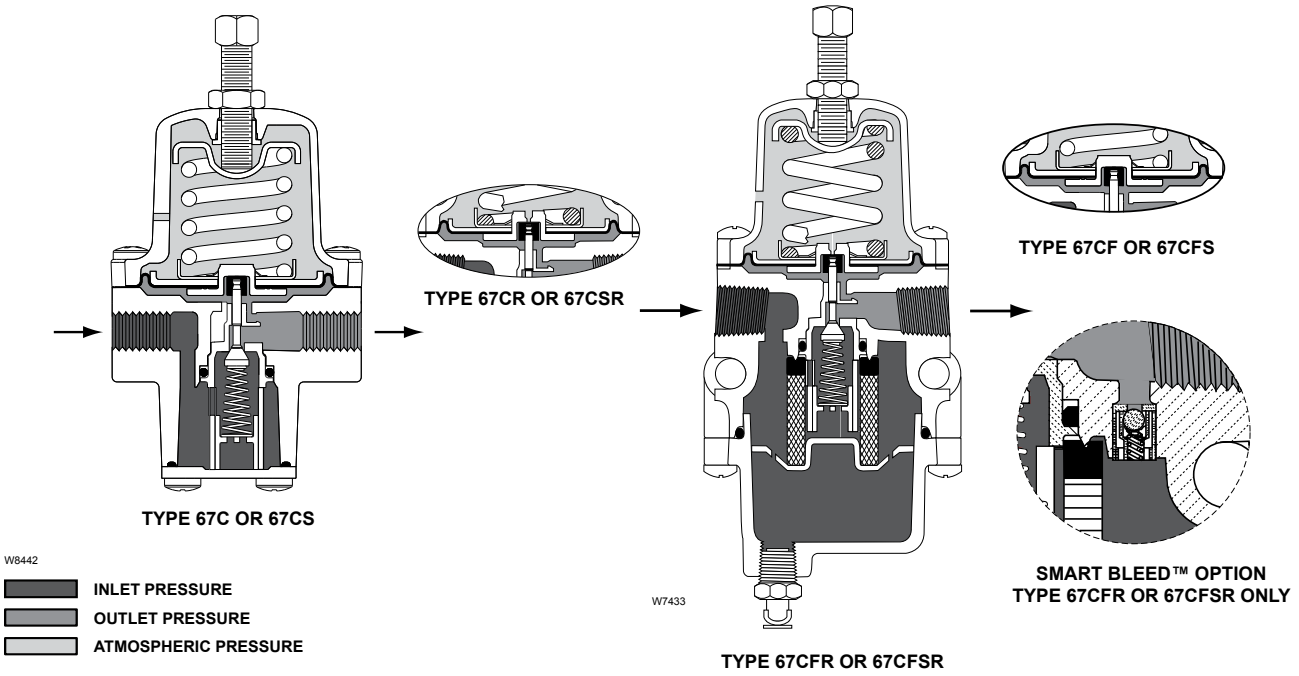

Figure 2. *67C Series Operational Schematics*

Note

During normal operation the check valve's metal to metal seat allows limited flow through the regulator from the inlet to outlet, even when there is no downstream demand. To prevent downstream pressure buildup, the smart bleed option is only available with the internal relief version of the 67C Series.

Installation

The 67C Series regulators may be installed in any position. Spring case vents must be protected against the entrance of rain, snow, debris, or any other foreign material that might plug the vent openings. The inlet connection is marked "In" and the two outlet connections are marked "Out". If a pressure gauge is not installed in one outlet connection, plug the unused connection. See Figures 5 to 9 for dimensions.

Emerson Process Management Regulator Technologies, Inc. (Regulator Technologies) provides an instruction manual with every regulator shipped. Refer to this for complete installation, operation, and maintenance instructions. Included is a complete listing of individual parts and recommended spare parts.

Overpressure Protection

The 67C Series regulators have maximum outlet pressure ratings that are lower than their maximum inlet pressure ratings. A pressure-relieving or pressure-limiting device is needed if inlet pressure can exceed the maximum outlet pressure rating.

Types 67CR, 67CSR, 67CFR, and 67CFSR regulators have a low capacity internal relief valve for minor seat leakage only. Other overpressure protection must be provided if the maximum inlet pressure can exceed the maximum pressure rating of the downstream equipment or exceeds maximum outlet pressure rating of the Type 67CR, 67CSR, 67CFR, or 67CFSR regulator.

Overpressuring any portion of a regulator or associated equipment may cause leakage, parts damage, or personal injury due to bursting of pressure-containing parts or explosion of accumulated gas. Regulator operation within ratings does not preclude the possibility of damage from external sources or from debris in the pipeline. A regulator should be inspected for damage periodically and after any overpressure condition.

Refer to the Capacity Information section and the Wide-Open Flow Coefficients for Relief Valve Sizing in the Specifications section on page 2 to determine the required relief valve capacity.

Capacity Information

Table 4 shows the air regulating capacities of the 67C Series regulators at selected inlet pressures and outlet pressure settings. Flows are shown in SCFH (at 60°F and 14.7 psia) and in Nm^3/h (at 0°C and 1.01325 bar) of air.

Note

The 67C Series regulators may be sized for 100% flow using capacities as shown in Table 4. It is not necessary to reduce published capacities.



Figure 3. *670 Series Typical Panel Layouts*

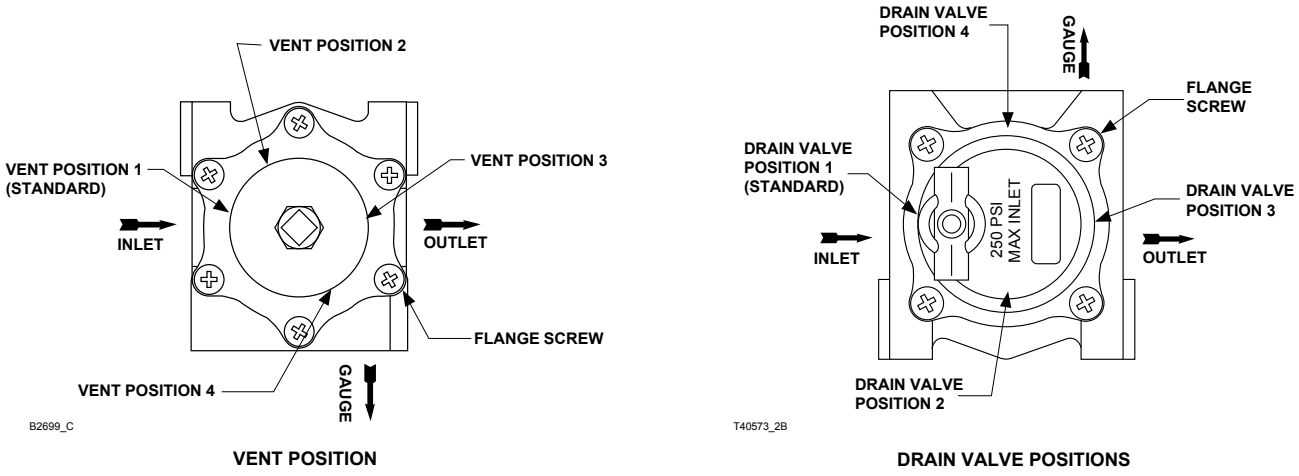

Figure 4. *67C Series Vent and Drain Valve Positions*

To determine the equivalent capacities for other gases, multiply the table capacity by the following appropriate conversion factor: 1.29 for 0.6 specific gravity natural gas, 0.810 for propane, 0.707 for butane, or 1.018 for nitrogen. For gases of other specific gravities, divide the table capacities by the square root of the appropriate specific gravity. To find wide-open flow capacities for relief sizing at any inlet pressure, perform one of the following procedures. Then, if necessary, convert using the factors provided above.

For critical pressure drops (absolute outlet pressure equal to or less than one-half of absolute inlet pressure), use the following formula:

$$Q = (P_1)(C_g)$$

For pressure drops lower than critical (absolute outlet pressure greater than one-half of absolute inlet pressure), use the following formula:

$$Q = \sqrt{\frac{520}{GT}} C_g P_1 SIN \left(\frac{3417}{C_1} \sqrt{\frac{\triangle P}{P_1}} \right) DEG$$

where,

Q = gas flow rate, SCFH
P_1 = absolute inlet pressure, psia (P_1 gauge + 14.7)
C_g = gas sizing coefficient
G = specific gravity of the gas
T = absolute temperature of gas at inlet, °Rankine
C_1 = flow coefficient ($C_g \div C_v$)
$\triangle P$ = pressure drop across the regulator, psi

Then, if capacity is desired in normal cubic meters per hour (at 0°C and 1.01325 bar), multiply SCFH by 0.0268.

670 Series Panel-Mounted Loading Regulators (Figure 3)

The 670 Series panel-mounted loading regulators are compact, rugged units used primarily for manually loading pressure-balanced gas regulators and providing manual control for diaphragm actuator control valves. Applications include remote control of gas pressure to burners in refineries, power plants, and various process furnaces.

Table 4. *67C Series Flow Capacities*

OUTLET PRESSURE RANGE, SPRING PART NUMBER AND COLOR CODE	OUTLET PRESSURE		INLET PRESSURE		CAPACITIES IN SCFH / Nm³/h OF AIR							
					Types 67C, 67CR, 67CS, and 67CSR				Types 67CF, 67CFR, 67CFS, and 67CFSR			
					10% Droop		20% Droop		10% Droop		20% Droop	
	psig	bar	psig	bar	SCFH	Nm³/h	SCFH	Nm³/h	SCFH	Nm³/h	SCFH	Nm³/h
0 to 35 psig / 0 to 2.4 bar T14059T0012 (Silver) T14113T0012 (Silver stripe)	15	1.0	50	3.4	250	6.7	430	11.5	250	6.7	430	11.5
			75	5.2	340	9.1	610	16.3	300	8.0	690	18.5
			100	6.9	430	11.5	800	21.4	330	8.8	1000	26.8
			150	10.3	680	18.2	1200	32.2	400	10.7	1600	42.9
			250	17.2	1300	34.8	1900	50.9	450	12.1	1800	48.2
			400	27.6(1)	390	10.5	1850	50.0	- - - -	- - - -	- - - -	- - - -
	20	1.4	50	3.4	310	8.3	460	12.3	350	9.4	500	13.4
			75	5.2	420	11.3	700	18.8	530	14.2	820	22.0
			100	6.9	620	16.6	940	25.2	750	20.1	1100	29.5
			150	10.3	960	25.7	1450	38.9	1400	37.5	1600	42.9
			250	17.2	1550	41.5	2150	57.6	2550	68.3	2700	72.4
			400	27.6(1)	1200	32.2	2750	73.7	- - - -	- - - -	- - - -	- - - -
	35	2.4	50	3.4	390	10.5	490	13.1	390	10.4	500	13.4
			75	5.2	590	15.8	850	22.8	640	17.2	820	22.0
			100	6.9	770	20.6	1150	30.8	840	22.5	1100	29.5
			150	10.3	1200	32.2	1750	46.9	1450	38.9	1650	42.9
			250	17.2	2200	58.9	2700	72.4	2450	65.7	2700	72.4
			400	27.6(1)	2850	76.4	3450	92.5	- - - -	- - - -	- - - -	- - - -
0 to 60 psig / 0 to 4.1 bar T14058T0012 (Blue stripe) T14114T0012 (Blue)	35	2.4	50	3.4	310	8.3	440	11.8	330	8.8	470	12.6
			75	5.2	440	11.8	670	18.0	500	13.4	730	19.6
			100	6.9	560	15.0	900	24.1	700	18.8	1000	26.8
			150	10.3	780	20.9	1350	36.2	1050	28.1	1550	41.5
			250	17.2	1450	38.9	2200	59.0	2000	53.6	2600	69.7
			400	27.6(1)	770	20.6	2500	67.0	- - - -	- - - -	- - - -	- - - -
	60	4.1	75	5.2	520	13.9	720	19.3	520	13.9	720	19.3
			100	6.9	750	20.1	1050	28.1	770	20.6	1000	26.8
			150	10.3	1100	29.5	1700	45.6	1100	29.5	1600	42.9
			250	17.2	2050	54.9	2850	76.4	2450	65.7	2750	73.7
			400	27.6(1)	3200	85.8	4300	115	- - - -	- - - -	- - - -	- - - -
0 to 125 psig / 0 to 8.6 bar T14060T0012 (Red stripe) T14115T0012 (Red)	80	5.5	100	6.9	500	13.4	800	21.4	530	14.2	780	20.9
			150	10.3	750	20.1	1200	32.2	780	20.9	1200	32.2
			250	17.2	1200	32.2	2050	54.9	1250	33.5	2200	59.0
			400	27.6(1)	910	24.4	3700	99.2	- - - -	- - - -	- - - -	- - - -
	125	8.6	150	10.3	900	24.1	1250	33.5	900	24.1	1150	30.8
			250	17.2	1560	41.8	2450	65.7	1650	44.2	2450	65.7
			400	27.6(1)	2200	59.0	4350	117	- - - -	- - - -	- - - -	- - - -
0 to 150 psig / 0 to 10.3 bar(2) 10C1730X012 (Black)	80	5.5	250	17.2	550	14.7	1200	32.2	550	14.7	1200	32.2
			400	27.6(1)	400	10.7	1100	29.5	- - - -	- - - -	- - - -	- - - -
	135	9.3	250	17.2	970	26.0	1800	48.2	1100	29.5	1800	48.2
			400	27.6(1)	840	22.5	2350	63.0	- - - -	- - - -	- - - -	- - - -
	150	10.3	250	17.2	1100	29.5	1850	49.6	1100	29.5	1850	49.6
			400	27.6(1)	940	25.2	2500	67.0	- - - -	- - - -	- - - -	- - - -

1. Inlet pressures above 250 psig / 17.2 bar with a maximum of 400 psig / 27.6 bar are only available on Types 67CS and 67CSR.
2. Available for Types 67CS, 67CSR, 67CFS, and 67CFSR only.

Three basic panels are available within the product line, each having one 67C Series pressure regulator connected to one or two gauges and a changeover valve.

A single gauge typically shows loading pressure to the control valve. For more information, see Bulletin 62.3:670.

NACE Universal Compliance

Optional materials are available for applications handling sour gases. These constructions comply with the recommendations of NACE International sour service standards.

The manufacturing processes and materials used by Emerson assure that all products specified for sour gas service comply with the chemical, physical, and metallurgical requirements of NACE MR0175 and/or NACE MR0103. Customers have the responsibility to specify correct materials. Environmental limitations may apply and shall be determined by the user.

Ordering Information

When ordering, complete the Ordering Guide on pages 11 and 12. Refer to the Specifications section on page 2. Review the description to the right of each specification and the information in each referenced table or figure. Specify your choice whenever a selection is offered.

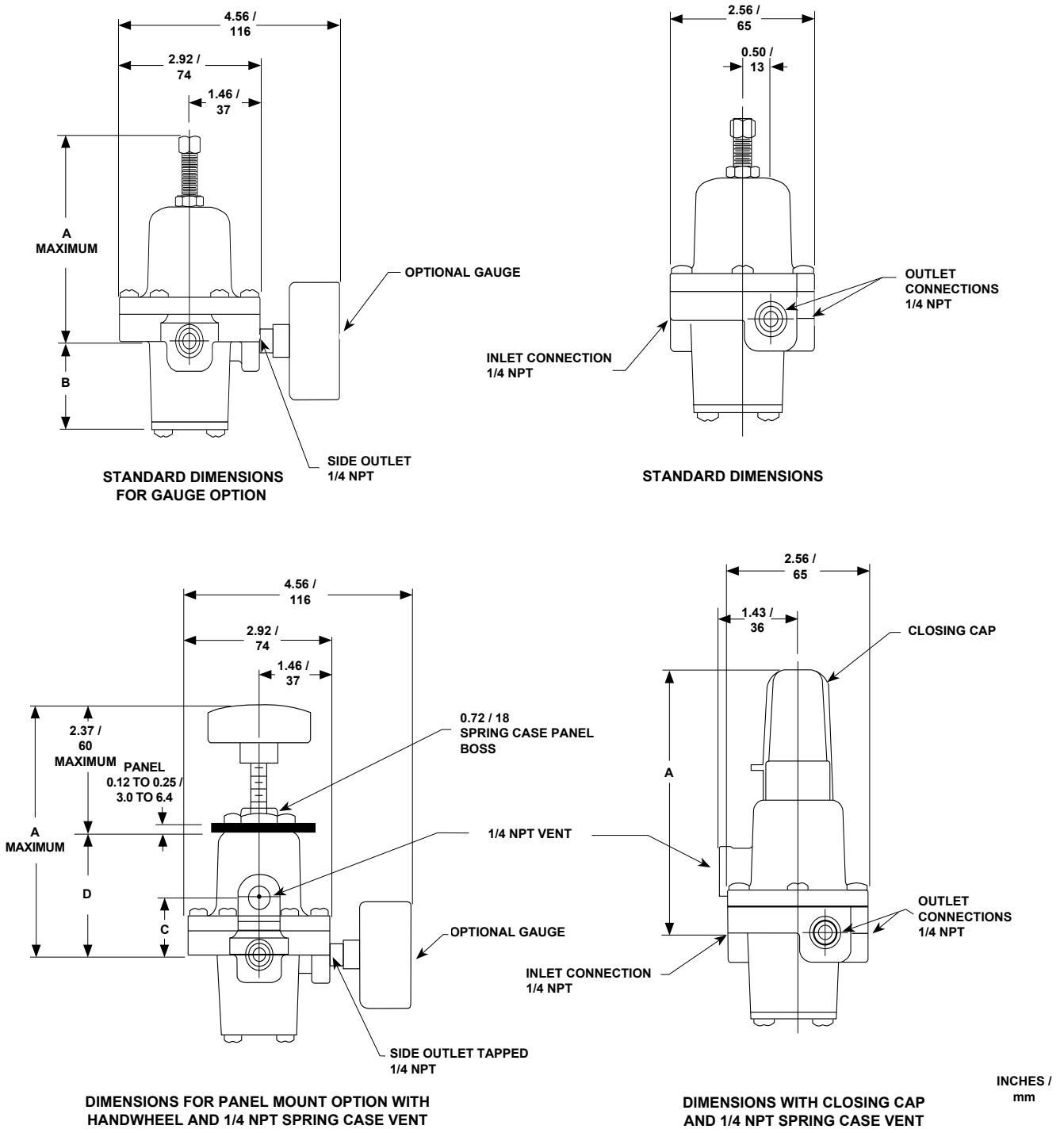

Figure 5. *Types 67C, 67CR, 67CS, and 67CSR Dimensions*

Table 5. *Types 67C, 67CR, 67CS, and 67CSR Dimensions*

TYPE	STANDARD DIMENSIONS				DIMENSION WITH CLOSING CAP		PANEL MOUNT OPTION WITH HANDWHEEL DIMENSIONS					
	A		B		A		A		C		D	
	Inches	mm	Inches	mm	Inches	mm	Inches	mm	Inches	mm	Inches	mm
67C and 67CR	3.50	89	1.51	38	4.60	117	4.69	119	1.08	27	2.33	59
67CS and 67CSR	4.13	105	1.62	41	4.93	125	5.00	127	1.14	29	2.65	67

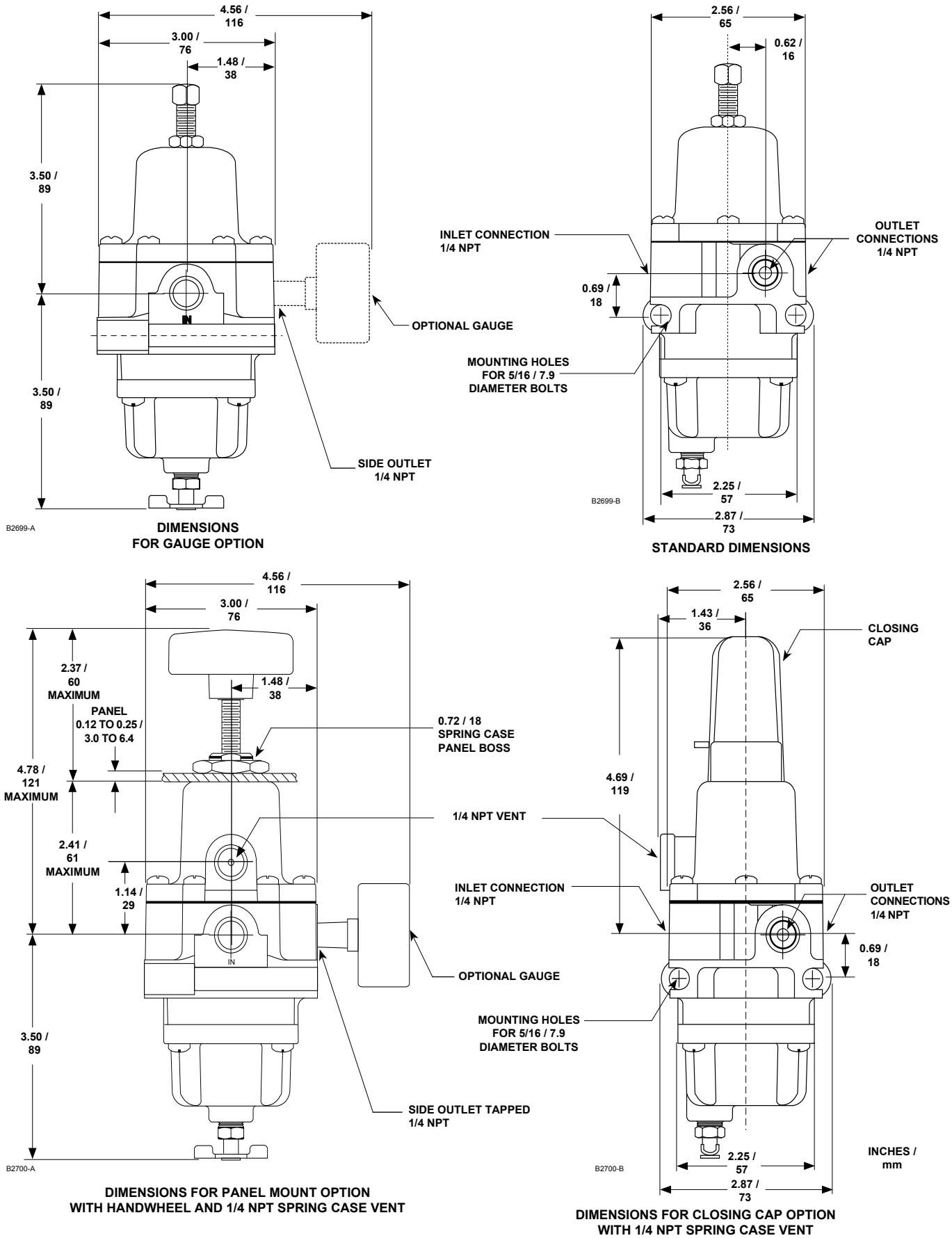

Figure 6. *Types 67CF and 67CFR Dimensions*

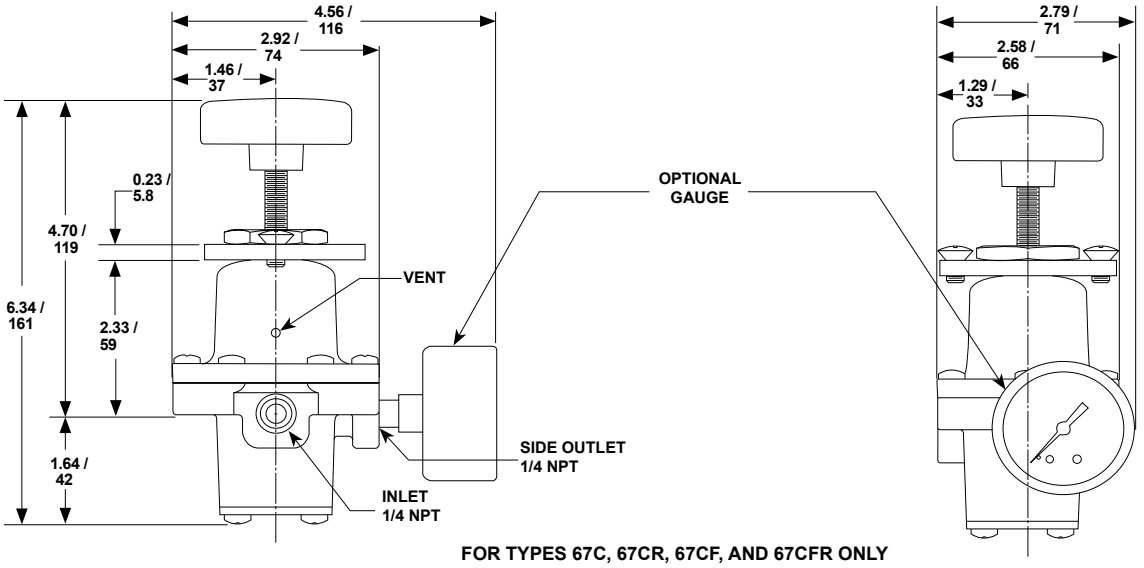

Figure 7. *Dimensions for 3-Hole Panel Mount Option With Handwheel and 1/4 NPT Spring Case Vent*

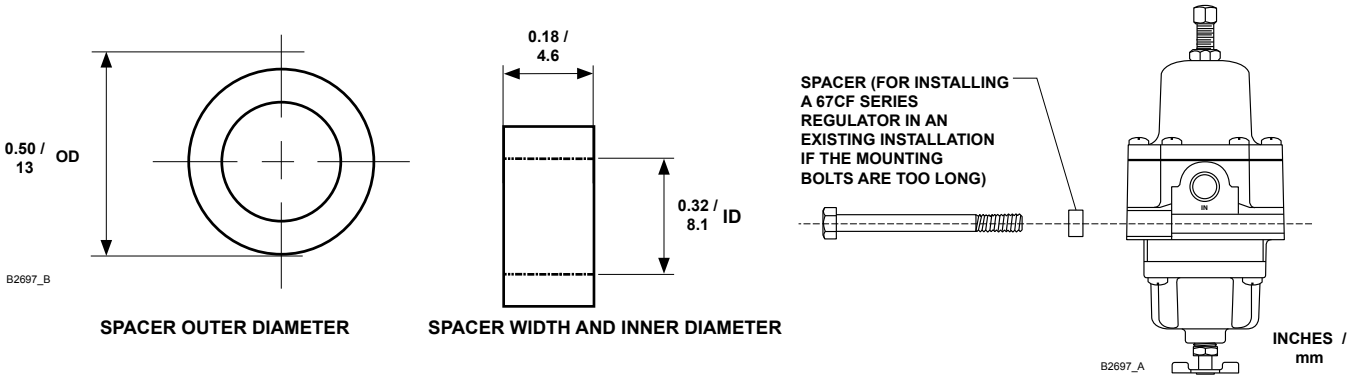

Figure 8. *Spacer Dimensions and Installation Schematic*

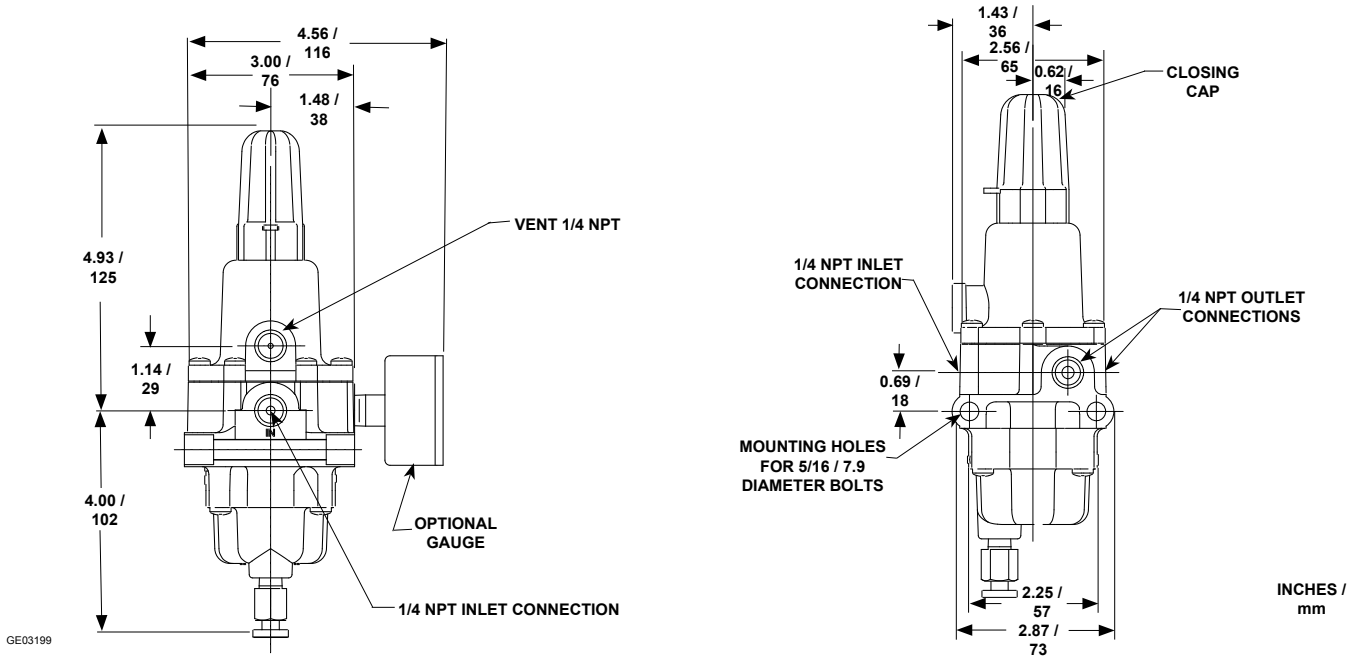

Figure 9. *Types 67CFS and 67CFSR Dimensions*

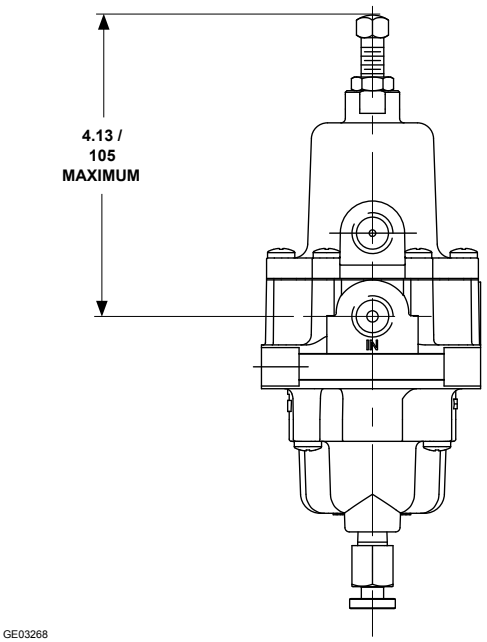

DIMENSIONS WITHOUT CLOSING CAP

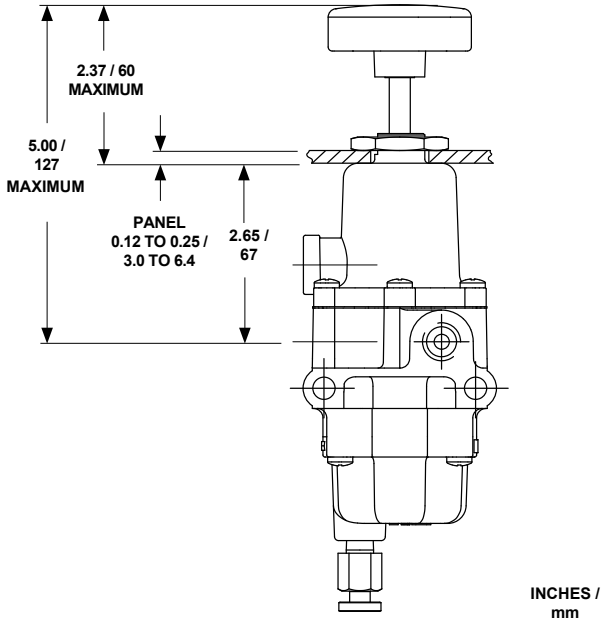

DIMENSIONS FOR PANEL MOUNT OPTION WITH HANDWHEEL

Figure 9. *Types 67CFS and 67CFSR Dimensions (continued)*

Ordering Guide

Type (Select One)
- ☐ 67C (Aluminum without internal relief)***
- ☐ 67CR (Aluminum with internal relief)***
- ☐ 67CS (Stainless steel without internal relief)***
- ☐ 67CSR (Stainless steel with internal relief)***
- ☐ 67CF (Aluminum with filter and without internal relief)***
- ☐ 67CFR (Aluminum with filter and internal relief)***
- ☐ 67CFS (Stainless steel with filter and without internal relief)***
- ☐ 67CFSR (Stainless steel with filter and internal relief)***

Quantity (Specify) _____

Spring Case Style (Select One)
- ☐ Drilled hole vent (Types 67C, 67CR, 67CF, and 67CFR **standard**)***
- ☐ 1/4 NPT vent (Types 67CS, 67CSR, 67CFS, and 67CFSR **standard**)***
- ☐ Single hole panel mount***
- ☐ 3-hole panel mount (Types 67C, 67CR, 67CF, and 67CFR only)***

Adjusting Screw (Select One)
- ☐ Square head (Types 67C, 67CR, 67CF, and 67CFR **standard**)***
- ☐ Square head with closing cap (Types 67CS, 67CSR, 67CFS, and 67CFSR **standard**)***
- ☐ Handwheel***

Outlet Pressure Range (Select One)
- ☐ 0 to 20 psig / 0 to 1.4 bar***
- ☐ 0 to 35 psig / 0 to 2.4 bar***
- ☐ 0 to 60 psig / 0 to 4.1 bar***
- ☐ 0 to 125 psig / 0 to 8.6 bar***
- ☐ 0 to 150 psig / 0 to 10.3 bar (Types 67CS, 67CSR, 67CFS, and 67CFSR only)***

Diaphragm, O-Rings, and Valve Plug (Select One)
- ☐ Nitrile (NBR) **(standard)***
- ☐ Fluorocarbon (FKM)**
- ☐ Silicone (VMQ) diaphragm, O-rings, and Nitrile (NBR) valve plug*

Filter Material (Select One)
- ☐ Polyethylene (5 microns) **(standard)***
- ☐ Glass (5 microns)***
- ☐ PVDF (Plastic) (40 microns)***
- ☐ Stainless steel (40 microns)***

Dripwell
- ☐ **Standard**
- ☐ Large capacity with manual drain valve
- ☐ Large capacity with automatic drain valve, Nitrile (NBR)
- ☐ Large capacity with automatic drain valve, Fluorocarbon (FKM)

Drain Valve (for Manual Drain Only) (Select One)
- ☐ Brass (Types 67CF and 67CFR **standard**)***
- ☐ Stainless steel (Types 67CFS and 67CFSR **standard**)***

Drain Valve Location (for Standard Dripwell Only) (Select One)
- ☐ Position 1 - Aligned with inlet **(standard)***
- ☐ Position 2
- ☐ Position 3
- ☐ Position 4

Spring Case Vent Location (Select One)
- ☐ Position 1 - Aligned with inlet **(standard)***
- ☐ Position 2
- ☐ Position 3
- ☐ Position 4

Fixed Bleed for Type 67CR, 67CSR, 67CFR, or 67CFSR (Optional)
- ☐ Yes**

Ordering Guide (continued)

Smart Bleed™ Internal Check Valve Airset for Types 67CFR and 67CFSR (Optional)
☐ Yes**

Second Outlet (Select One)
☐ Open (Types 67C, 67CR, 67CF, and 67CFR **standard**)***
☐ Plugged with pipe plug (Types 67CS, 67CSR, 67CFS, and 67CFSR **standard**)***
☐ Tire Valve***
☐ Pressure Gauge (see below)

Triple Scale Pressure Gauge (Optional)
☐ **Brass Gauge** or ☐ **Stainless Steel Gauge**
☐ 0 to 30 psig / 0 to 0.2 MPa / 0 to 2.1 bar***
☐ 0 to 60 psig / 0 to 0.4 MPa / 0 to 4.1 bar***
☐ 0 to 160 psig / 0 to 1.1 MPa / 0 to 11.0 bar***

NACE MR0175 Construction (Optional)(1)
☐ Yes (not available with gauge)**

1. Product complies with the material requirements of NACE MR0175. Environmental limits may apply.

Regulators Quick Order Guide	
* * *	Readily Available for Shipment
* *	Allow Additional Time for Shipment
*	Special Order, Constructed from Non-Stocked Parts. Consult your local Sales Office for Availability.
Availability of the product being ordered is determined by the component with the longest shipping time for the requested construction.	

NACE MR0103 Construction (Optional)
☐ Yes (not available with gauge)**

Replacement Parts Kit (Optional)
☐ Yes, send one replacement parts kit to match this order.

Specification Worksheet

Application (Please designate units):
Specific Use _____
Line Size _____
Gas Type and Specific Gravity _____
Gas Temperature _____
Does the Application Require Overpressure Protection?
☐ Yes ☐ No If yes, which is preferred:
☐ Relief Valve ☐ Monitor Regulator
☐ Shutoff Device
Is overpressure protection equipment selection assistance desired? _____

Pressure (Please designate units):
Maximum Inlet Pressure (P_{1max}) _____
Minimum Inlet Pressure (P_{1min}) _____
Downstream Pressure Setting(s) (P_2) _____
Maximum Flow (Q_{max}) _____

Performance Required: _____
Accuracy Requirements? _____
Need for Extremely Fast Response? _____

Other Requirements: _____

Industrial Regulators

Emerson Process Management
Regulator Technologies, Inc.

USA - Headquarters
McKinney, Texas 75069-1872, USA
Tel: +1 800 558 5853
Outside U.S. +1 972 548 3574

Asia-Pacific
Shanghai 201206, China
Tel: +86 21 2892 9000

Europe
Bologna 40013, Italy
Tel: +39 051 419 0611

Middle East and Africa
Dubai, United Arab Emirates
Tel: +971 4811 8100

Natural Gas Technologies

Emerson Process Management
Regulator Technologies, Inc.

USA - Headquarters
McKinney, Texas 75069-1872, USA
Tel: +1 800 558 5853
Outside U.S. +1 972 548 3574

Asia-Pacific
Singapore 128461, Singapore
Tel: +65 6770 8337

Europe
Bologna 40013, Italy
Tel: +39 051 419 0611
Chartres 28008, France
Tel: +33 2 37 33 47 00

TESCOM

Emerson Process Management
Tescom Corporation

USA - Headquarters
Elk River, Minnesota 55330-2445, USA
Tels: +1 763 241 3238
+1 800 447 1250

Europe
Selmsdorf 23923, Germany
Tel: +49 38823 31 287

Asia-Pacific
Shanghai 201206, China
Tel: +86 21 2892 9499

For further information visit www.fisherregulators.com

The Emerson logo is a trademark and service mark of Emerson Electric Co. All other marks are the property of their prospective owners. Fisher is a mark owned by Fisher Controls International LLC, a business of Emerson Process Management.

The contents of this publication are presented for informational purposes only, and while every effort has been made to ensure their accuracy, they are not to be construed as warranties or guarantees, express or implied, regarding the products or services described herein or their use or applicability. We reserve the right to modify or improve the designs or specifications of such products at any time without notice.

Emerson Process Management Regulator Technologies, Inc. does not assume responsibility for the selection, use or maintenance of any product. Responsibility for proper selection, use and maintenance of any Emerson Process Management Regulator Technologies, Inc. product remains solely with the purchaser.

EMERSON™
Process Management

©Emerson Process Management Regulator Technologies, Inc., 2001, 2013; All Rights Reserved

67C Series Instrument Supply Regulators



TYPE 67CF FILTER REGULATOR
WITH OPTIONAL GAUGE



TYPE 67C OR 67CR REGULATOR

Figure 1. *67C Series Regulators*

Introduction

Scope of the Manual

This manual provides instructions and parts lists for 67C Series instrument supply regulators. Instructions and parts lists for other equipment mentioned in this instruction manual, as well as for other 67C Series regulators, are found in separate manuals.

Product Descriptions

The 67C Series direct-operated regulators are typically used to provide constantly controlled, reduced pressures to pneumatic and electro-pneumatic controllers and other instruments. They are suitable for most air or gas applications. Other applications include providing reduced pressures to air chucks, air jets, and spray guns.

- The Types 67C and 67CS are the standard instrument supply regulators without a filter or internal relief.
- The Types 67CF and 67CFS are equipped with a filter for removing particles from the supply gas.
- The Types 67CR and 67CSR have an internal relief valve with a soft seat for reliable shutoff with no discernible leakage.
- The Types 67CFR and 67CFSR have a filter and internal relief valve with a soft seat for reliable shutoff with no discernible leakage.

Principle of Operation

Downstream pressure is registered internally on the lower side of the diaphragm. When the downstream pressure is at or above the set pressure, the valve plug is held against the orifice and there is no flow through the regulator. When demand increases, downstream pressure drops slightly allowing the spring to extend, moving the stem down and the valve plug away from the orifice. This allows flow through the regulator.

D102601X012

Specifications

The Specifications section gives some general specifications for the 67C Series regulator. A label on the spring case gives the control spring range for a given regulator as it comes from the factory.

Body Size, Inlet, and Outlet Connection Style
1/4 NPT

Maximum Inlet Pressure (Body Rating)[1]
All except Types 67CS and 67CSR:
250 psig / 17.2 bar
Types 67CS and 67CSR: 400 psig / 27.6 bar

Outlet Pressure Ranges
See Table 1

Maximum Emergency Outlet Pressure[1]
50 psi / 3.4 bar over outlet pressure setting

Wide-Open Flow Coefficients
Main Valve: C_g: 11.7; C_v: 0.36; C_1: 32.2
Internal Relief Valve: C_g: 1.45; C_v: 0.045; C_1: 32.8

IEC Sizing Coefficients
Main Valve: X_T: 0.66; F_L: 0.89; F_D: 0.50

Accuracy
Inlet Sensitivity for Nitrile (NBR) and Silicone (VMQ) Elastomers: Less than 0.2 psig / 14 mbar change in outlet pressure for every 25 psig / 1.7 bar change in inlet pressure
Inlet Sensitivity for Fluorocarbon (FKM) Elastomers: Less than 0.4 psig / 28 mbar change in outlet pressure for every 25 psig / 1.7 bar change in inlet pressure
Repeatability for Nitrile (NBR) and Silicone (VMQ) Elastomers: 0.1 psig / 7 mbar[2]
Repeatability for Fluorocarbon (FKM) Elastomers: 0.3 psig / 21 mbar[2]
Air Consumption: Testing repeatedly shows no discernible leakage

Types 67CR, 67CSR, 67CFR, and 67CFSR Internal Relief Performance
Low capacity for minor seat leakage only; other overpressure protection must be provided if inlet pressure can exceed the maximum pressure rating of downstream equipment or exceeds maximum outlet pressure rating of the regulator.

Approximate Weights
Types 67C, 67CR, 67CF, and 67CFR:
1 pound / 0.5 kg
Types 67CS and 67CSR:
2.5 pounds / 1.1 kg
Types 67CFS and 67CFSR:
4 pounds / 1.8 kg

Temperature Capabilities[1]
With Nitrile (NBR)
Standard Bolting: -20 to 180°F / -29 to 82°C
Stainless Steel Bolting: -40 to 180°F / -40 to 82°C
With Fluorocarbon (FKM):
Polyethylene Filter[5] ***(Standard)****:*
0 to 180°F / -18 to 82°C
Polyvinylidene (PVDF), Stainless steel, or Glass Filter (Optional):
0 to 300°F / -18 to 149°C
With Silicone (VMQ)[3] **Diaphragm and Low Temperature bolting:** -60 to 180°F / -51 to 82°C
With Gauges: -40 to 180°F / -40 to 82°C

Smart Bleed™ Check Valve Setpoint
6 psi / 0.41 bar differential

Types 67CF, 67CFR, 67CFS, and 67CFSR Filter Capabilities
Free Area: 12 times pipe area
Micron Rating:
Polyethylene Filter[5] ***(Standard)****:* 5 microns
Glass Fiber Filter (Optional): 5 microns *PVDF or Stainless Steel Filter (Optional):* 40 microns

Drain Valve and Spring Case Vent Location
Aligned with inlet standard, other positions optional

Pressure Registration
Internal

Options
All Types
- Handwheel adjusting screw
- Inlet screen
- NACE MR0175 or NACE MR0103 construction[4]
- Panel mount (includes spring case with 1/4 NPT vent, handwheel, and panel mounting nut)
- Closing cap (available on spring case with 1/4 NPT vent)
- Fluorocarbon (FKM) elastomers for high temperatures and/or corrosive chemicals
- Silicone (VMQ) elastomers for cold temperatures
- Fixed Bleed Restriction
- Triple scale outlet pressure gauge (Brass or Stainless steel)
- Stainless steel stem on the valve plug
- Tire valve or pipe plug in second outlet

Types 67CFR and 67CFSR only
- Smart Bleed internal check valve
- Large dripwell with manual or automatic drain

Types 67CF and 67CFR only
- Stainless steel drain valve

1. The pressure/temperature limits in this Instruction Manual and any applicable standard or code limitation should not be exceeded.
2. Repeatability is the measure of the regulator's ability to return to setpoint consistently when traveling from steady state to transient to steady state.
3. Silicone (VMQ) is not compatible with hydrocarbon gas.
4. Product complies with the material requirements of NACE MR0175. Environmental limits may apply.
5. Do not use in high aromatic hydrocarbon service.

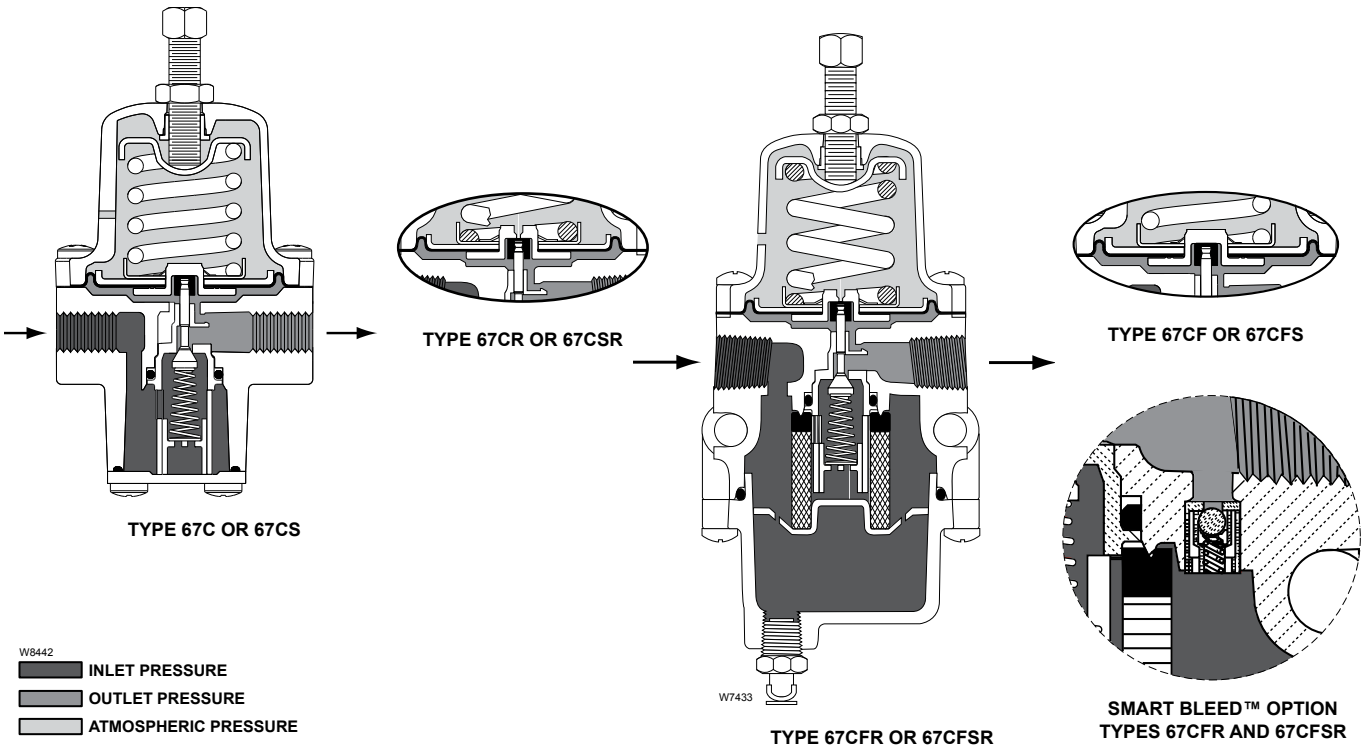

Figure 2. *67C Series Operational Schematics*

Internal Relief (Types 67CR, 67CSR, 67CFR, and 67CFSR)

If for some reason, outside of normal operating conditions, the downstream pressure exceeds the setpoint of the regulator, the force created by the downstream pressure will lift the diaphragm until the diaphragm is lifted off the relief seat. This allows flow through the token relief. The relief valve on the Type 67CR, 67CSR, 67CFR, or 67CFSR is an elastomer plug that prevents leakage of air from the downstream to atmosphere during normal operation, thereby conserving plant air.

Smart Bleed Airset

In some cases, it is desired to exhaust downstream pressure if inlet pressure is lost or drops below the setpoint of the regulator. For example, if the regulator is installed on equipment that at times has no flow demand but is expected to backflow on loss of inlet pressure. The Types 67CFR and 67CFSR can be ordered with the Smart Bleed option which includes an internal check valve for this application. During operation, if inlet pressure is lost, or decreases below the setpoint of the regulator, the downstream pressure will back flow upstream through the regulator and check valve. This option eliminates the need for a fixed bleed downstream of the regulator, thereby conserving plant air.

Note

During normal operation the check valve's metal to metal seat allows limited flow through the regulator from the inlet to outlet, even when there is no downstream demand. To prevent downstream pressure buildup, the Smart Bleed option is only available with the internal relief version of the 67C Series.

Overpressure Protection

The 67C Series regulators have maximum outlet pressure ratings that are lower than their maximum inlet pressure ratings. A pressure relieving or pressure limiting device is needed if inlet pressure can exceed the maximum outlet pressure rating.

Types 67CR, 67CSR, 67CFR, and 67CFSR have a low capacity internal relief valve for minor seat leakage only. Other overpressure protection must be provided if the maximum inlet pressure can exceed the maximum pressure rating of the downstream equipment or exceeds the maximum outlet pressure rating of the regulator.

Table 1. *Outlet Pressure Ranges and Control Spring Data*

TYPE	OUTLET PRESSURE RANGES		CONTROL SPRING DATA						
			Color	Material	Part Number	Wire Diameter		Free Length	
	psig	bar				Inch	mm	Inch	mm
67C, 67CR, 67CF, and 67CFR	0 to 20	0 to 1.4	Green stripe	Music Wire	GE07809T012	0.135	3.43	1.43	36.2
	0 to 35	0 to 2.4	Silver		T14059T0012	0.156	3.96	1.43	36.2
	0 to 60	0 to 4.1	Blue stripe		T14058T0012	0.170	4.32	1.43	36.2
	0 to 125	0 to 8.6	Red stripe		T14060T0012	0.207	5.26	1.43	36.2
	0 to 35	0 to 2.4	Silver stripe	Inconel®	T14113T0012	0.156	3.96	1.43	36.2
	0 to 60	0 to 4.1	Blue		T14114T0012	0.172	4.37	1.43	36.2
	0 to 125	0 to 8.6	Red		T14115T0012	0.207	5.26	1.43	36.2
67CS, 67CSR, 67CFS, and 67CFSR	0 to 20	0 to 1.3	Green	Inconel®	10C1729X012	0.135	3.43	1.50	38.1
	0 to 35	0 to 2.4	Silver stripe		T14113T0012	0.156	3.96	1.43	36.2
	0 to 60	0 to 4.1	Blue		T14114T0012	0.172	4.37	1.43	36.2
	0 to 125	0 to 8.6	Red		T14115T0012	0.207	5.26	1.43	36.2
	0 to 150	0 to 10.3	Black		10C1730X012	0.250	6.35	1.77	44.9

Inconel® is a marked own by Special Metals Corporation.

Installation

Note

If the regulator is shipped mounted on another unit, install that unit according to the appropriate Instruction Manual.

WARNING

Personal injury, property damage, equipment damage, or leakage due to escaping gas or bursting of pressure-containing parts may result if this regulator is overpressured or is installed where service conditions could exceed the limits given in the Specifications section, or where conditions exceed any ratings of the adjacent piping or piping connections. To avoid such injury or damage, provide pressure-relieving or pressure-limiting devices (as required by the appropriate code, regulation, or standard) to prevent service conditions from exceeding those limits.

The internal relief valve of the Type 67CR, 67CSR, 67CFR, or 67CFSR does not provide full overpressure protection. The internal relief valve is designed for minor seat leakage only. If maximum inlet pressure to the regulator exceeds maximum pressure ratings of the downstream equipment or exceeds maximum allowable outlet pressure of the regulator, additional overpressure protection is required.

A regulator may vent some gas to the atmosphere. In hazardous or flammable gas service, vented gas may accumulate and cause personal injury, death, or property damage due to fire or explosion. Vent a regulator in hazardous gas service to a remote, safe location away from air intakes or any hazardous area. The vent line or stack opening must be protected against condensation or clogging.

Before installing a Type 67C, 67CR, 67CS, 67CSR, 67CF, 67CFR, 67CFS, or 67CFSR regulator, be sure the installation complies with the following installation guidelines:

1. Regulator operation within ratings does not preclude the possibility of damage from debris in the lines or from external sources. Regulators should be inspected for damage periodically and after any overpressure condition.
2. Only personnel qualified through training and experience should install, operate, and maintain a regulator. Make sure that there is no damage to or foreign material in the regulator. Also ensure that all tubing and piping is free of debris.
3. Install the regulator so that flow is from the IN to the OUT connection as marked on the regulator body.
4. For best drainage, orient the drain valve (key 2) to the lowest possible point on the dripwell (key 5). This orientation may be improved by rotating the dripwell with respect to the body (key 1).
5. A clogged spring case vent hole may cause the regulator to function improperly. To keep this vent hole from being plugged (and to keep the spring case from collecting moisture, corrosive chemicals, or other foreign material) orient the vent

to the lowest possible point on the spring case or otherwise protect it.

Inspect the vent hole regularly to make sure it is not plugged. Spring case vent hole orientation may be changed by rotating the spring case with respect to the body. A 1/4 NPT spring case vent may be remotely vented by installing obstruction-free tubing or piping into the vent. Protect the remote vent by installing a screened vent cap on the remote end of the vent pipe.

6. For use in regulator shutdown, install upstream block and vent valves and downstream block and vent valves (if required), or provide some other suitable means of properly venting the regulator inlet and outlet pressures. Install a pressure gauge to monitor instruments on startup.
7. Apply a good grade of pipe compound to the external pipe threads before making connections, making sure not to get the pipe compound inside the regulator.
8. Install tubing fitting or piping into the 1/4 NPT inlet connection on the body (key 1) and into the 1/4 NPT body outlet connection.
9. The second 1/4 NPT outlet can be used for a gauge or other use. If not used, it must be plugged.

Installing a 67CF Series Regulator in an Existing Installation

When installing a 67CF Series regulator in an existing installation, it may be necessary to use spacers (key 34, Figure 13) to adapt the installation. If the mounting bolts are too long, place a spacer on the bolt (see Figure 13). To be sure the regulator is secure, the bolts should have at least two full threads of engagement.

Startup and Adjustment

Key numbers are referenced in Figures 3 through 9.

1. With proper installation completed and downstream equipment properly adjusted, slowly open the upstream and downstream shutoff valve (when used) while using pressure gauges to monitor pressure.

WARNING

To avoid personal injury, property damage, or equipment damage caused by bursting of pressure containing parts or explosion of accumulated gas, never adjust the control spring to produce an outlet pressure higher than the upper limit of the outlet pressure range for that particular spring. If the desired outlet pressure is not within the range of the control spring, install a spring of the proper range according to the diaphragm parts maintenance procedure.

2. If outlet pressure adjustment is necessary, monitor outlet pressure with a gauge during the adjustment procedure. The regulator is adjusted by loosening the locknut (key 18), if used, and turning the adjusting screw or handwheel (key 19) clockwise to increase or counterclockwise to decrease the outlet pressure setting. Retighten the locknut to maintain the adjustment position.

Shutdown

First, close the nearest upstream block valve and then close the nearest downstream block valve (when used). Next, open the downstream vent valve. Since the regulator remains open in response to the decreasing downstream pressure, pressure between the closed block valves will be released through the open vent valve.

Maintenance

Regulator parts are subject to normal wear and must be inspected and replaced as necessary. The frequency of inspection and replacement of parts depends on the severity of service conditions and applicable codes and government regulations. Open the Type 67CF, 67CFR, 67CFS, or 67CFSR drain valve (key 2) regularly to empty accumulated liquid from the dripwell (key 5).

Note

If sufficient clearance exists, the body (key 1) may remain mounted on other equipment or in a line or panel during maintenance unless the entire regulator will be replaced.

WARNING

To avoid personal injury, property damage, or equipment damage caused by sudden release of pressure or explosion of accumulated gas,

do not attempt any maintenance or disassembly without first isolating the regulator from system pressure and relieving all internal pressure from the regulator.

Types 67C, 67CR, 67CS, and 67CSR

Trim Maintenance

Key numbers are referenced in Figures 3, 4, and 12.

1. Remove four bottom plate screws (key 3) from the bottom plate (key 39) and separate the bottom plate and O-ring (key 4) from the body (key 1).
2. Inspect the removed parts for damage and debris. Replace any damaged parts.
3. To remove the valve cartridge assembly, grasp the end of cartridge (key 10) and pull it straight out of body (key 1). Replace with new cartridge assembly. The cartridge assembly may be disassembled and parts may be cleaned or replaced. If the soft seat (key 15) was removed, make sure it is properly snapped into place before installing the valve cartridge assembly.
4. Check O-ring (key 14) for wear and replace, if necessary. Apply lubricant to the O-ring and place in the body. Align cartridge key to keyway in body and insert. Reinstall the O-ring (key 4), secure the bottom plate (key 39) with screws (key 3), and torque to 15 to 30-inch-pounds / 1.7 to 3.4 N•m.

Diaphragm Maintenance

Key numbers are referenced in Figures 3 and 4.

1. Back out the adjusting screw or handwheel (key 18) until compression is removed from the spring (key 17).
2. Remove the spring case screws (key 3) to separate the spring case (key 7) from the body (key 1). Remove the upper spring seat (key 20) and spring (key 17).
3. Remove the diaphragm assembly (key 16), inspect the diaphragm, and replace the assembly, if necessary.
4. Place the diaphragm assembly (key 16) on the body (key 1) as shown in Figure 3 or 4. Push down on the diaphragm assembly to make sure the valve plug (key 11) strokes smoothly and approximately 1/16 inch / 1.6 mm.

Note

In step 5, if installing a control spring of a different range, be sure to delete the spring range originally appearing on the label and indicate the new spring range.

5. Stack the control spring (key 17) and upper spring seat (key 20) onto the diaphragm assembly (key 16).
6. Install the spring case (key 7) on the body (key 1) with the vent oriented to prevent clogging or entrance of moisture. Install the six spring case screws (key 3) using a crisscross pattern and torque to 15 to 30-inch-pounds / 1.7 to 3.4 N•m.

Note

On Types 67CS and 67CSR, lubricate the adjusting screw (key 18) thread to reduce galling of the Stainless steel.

7. When all maintenance is complete, refer to the Startup and Adjustment section to put the regulator back into operation and adjust the pressure setting. Tighten the locknut (key 19) if used, and install the closing cap (key 33) if used.

Types 67CF, 67CFR, 67CFS, and 67CFSR

Filter Element and Trim Maintenance

Key numbers are referenced in Figures 5, 6, and 12.

1. Remove four dripwell screws (key 3) from the dripwell (key 5) and separate the dripwell and O-ring (key 4) from the body (key 1). The filter retainer (key 9), thrust washer (key 37), filter element (key 6), and gasket (key 26) may come off with dripwell. If not, remove these parts.
2. Inspect the removed parts for damage and debris. Replace any damaged parts. If a replacement is not available, the filter element may be cleaned.
3. To remove the valve cartridge assembly, grasp the end of cartridge and pull it straight out of body (key 1). Replace with new cartridge assembly. The cartridge assembly may be disassembled and parts may be cleaned or replaced. If the soft seat (key 15) was removed, make sure it is properly snapped into place before installing the valve cartridge assembly.
4. Check O-ring (key 14) for wear and replace, if necessary. Apply lubricant to the O-ring (key 14), then align cartridge key to keyway in body and insert. Reinstall the gasket (key 26), filter element

(key 6), thrust washer (key 37), and filter retainer (key 9). Reinstall the O-ring (key 4), secure the dripwell with screws (key 3), and torque to 15 to 30-inch-pounds / 1.7 to 3.4 N•m.

Diaphragm Maintenance

Key numbers are referenced in Figures 5 and 6.

1. Back out the adjusting screw or handwheel (key 18) until compression is removed from the spring (key 17).
2. Remove the six spring case screws (key 3) to separate the spring case (key 7) from the body (key 1). Remove the upper spring seat (key 20) and spring (key 17).
3. Remove the diaphragm assembly (key 16), inspect the diaphragm, and replace the assembly, if necessary.
4. Place the diaphragm assembly (key 16) on the body (key 1) as shown in Figure 5. Push down on the diaphragm assembly to make sure the valve plug (key 11) strokes smoothly and approximately 1/16 inch / 1.6 mm.

Note

In step 5, if installing a control spring of a different range, be sure to delete the spring range originally appearing on the label and indicate the new spring range.

5. Stack the control spring (key 17) and upper spring seat (key 20) onto the diaphragm assembly (key 16).
6. Install the spring case (key 7) on the body (key 1) with the vent oriented to prevent clogging or entrance of moisture. Install the six spring case screws (key 3) using a crisscross pattern and torque to 15 to 30-inch-pounds / 1.7 to 3.4 N•m.

Note

On Types 67CFS and 67CFSR, lubricate the adjusting screw (key 18) thread to reduce galling of Stainless steel.

7. When all maintenance is complete, refer to the Startup and Adjustment section to put the regulator back into operation and adjust the pressure setting. Tighten the locknut (key 19) if used, and install the closing cap (key 33) if used.

Parts Ordering

When corresponding with the local Sales Office about this regulator, include the type number and all other pertinent information printed on the label. Specify the eleven-character part number when ordering new parts from the following parts list.

Parts List

Key	Description	Part Number
	Parts Kits	
	Types 67C, 67CR, 67CS, and 67CSR	
	Includes valve cartridge assembly (contains keys 10, 11, 12, 13, 14, and 15), O-ring (key 4), diaphragm assembly (key 16), and four screws (key 3)	
	Type 67C (without relief)	
	Brass stem with Nitrile (NBR) plug	R67CX000012
	Aluminum stem with Nitrile (NBR) plug (NACE)	R67CX000N12
	Type 67CR (with relief)	
	Brass stem with Nitrile (NBR) plug	R67CRX00012
	Aluminum stem with Nitrile (NBR) plug (NACE)	R67CRX00N12
	Type 67CS (without relief)	
	Stainless steel stem with Nitrile (NBR) plug (NACE)	R67CSX00012
	Type 67CSR (with relief)	
	Stainless steel stem with Nitrile (NBR) plug (NACE)	R67CSRX0012
	Types 67CF, 67CFR, and 67CFSR	
	Includes valve cartridge assembly (contains keys 10, 11, 12, 13, 14, and 15), diaphragm assembly (key 16), O-ring (key 4), filter element (key 6), filter gasket (key 26), thrust washer (key 37), and four screws (key 3)	
	Type 67CF (without relief)	
	Brass stem with Nitrile (NBR) plug	R67CFX00012
	Aluminum stem with Nitrile (NBR) plug (NACE)	R67CFX00N12
	Type 67CFR (with relief)	
	Brass stem with Nitrile (NBR) plug	R67CFRX0012
	Aluminum stem with Nitrile (NBR) plug (NACE)	R67CFRX0N12
	Type 67CFSR (with relief)	
	Stainless steel stem with Nitrile (NBR) plug (NACE)	R67CFSRX012
	Valve Cartridge Assembly Only*(1)	
	Type 67C, 67CR, 67CF, or 67CFR	
	Brass stem with Nitrile (NBR) plug	
	with Nitrile (NBR) O-ring	T14121T0012
	with Silicone (VMQ) O-ring	T14121T0032
	Aluminum stem	
	with Fluorocarbon (FKM) plug	T14121T0022
	with Nitrile (NBR) plug	T14121T0042
	Aluminum stem (NACE)	
	with Nitrile (NBR) plug	T14121T0052
	with Fluorocarbon (FKM) plug	T14121T0062
	Stainless steel stem	
	with Nitrile (NBR) plug	T14121T0072
	Type 67CS, 67CSR, 67CFS, or 67CFSR	
	316 Stainless steel stem	
	with Nitrile (NBR) plug and O-rings (NACE)	T14121T0092
	with Fluorocarbon (FKM) plug and O-rings	T14121T0102
	with Nitrile (NBR) plug and Silicone (VMQ) O-rings	T14121T0112

1. Valve cartridge assembly includes keys 10, 11, 12, 13, 14, and 15.
*Recommended Spare Part.

Key	Description	Part Number
	Automatic Drain Conversion Kits	
	Types 67CF, 67CFR, 67CFS, and 67CFSR	
	Includes auto-drain (key 2), four flange screws (key 3), dripwell O-ring (key 4), and dripwell (key 5).	
	Note: Temperature rating is 40 to 175°F / 4 to 79°C.	
	Types 67CF and 67CFR	
	Nitrile (NBR)	R67ADNX0012
	Fluorocarbon (FKM)	R67ADFX0012
	Types 67CFS and 67CFSR	
	Nitrile (NBR)	R67ADNX0022
	Fluorocarbon (FKM)	R67ADFX0022
1	Body	
	Type 67C or 67CR, Aluminum	T40643T0RG2
	Type 67CS or 67CSR, CF3M/CF8M Stainless steel	GE00909X012
	Type 67CF or 67CFR, Aluminum	T80510T0012
	Type 67CFS or 67CFSR, CF3M/CF8M Stainless steel	40C1887X012
	Type 67CFR with Smart Bleed™, Aluminum	GE03477X012
2	Drain Valve	
	Manual Type 67CF or 67CFR	
	Brass	1K418918992
	18-8 Stainless steel	AH3946X0012
	Type 67CFS or 67CFSR	
	316 Stainless steel	AH3946X0032
	18-8 Stainless steel	AH3946X0012
	Automatic (only used with large capacity dripwell)	
	Type 67CFS or 67CFSR	
	Nitrile (NBR)	GG00554X012
	Fluorocarbon (FKM)	GG00554X022
3	Flange Screw	
	Type 67C, 67CR, 67CF, or 67CFR	
	Standard spring case and spring case with 1/4 NPT vent (10 required)	T13526T0012
	For wire seal	
	Zinc-plated steel (9 required)	T13526T0012
	Steel (with hole) (1 required)	14B3987X012
	Type 67CS, 67CSR, 67CFS, or 67CFSR (10 required)	T13526T0042
4*	O-ring	
	Type 67C, 67CR, 67CS, or 67CSR	
	Nitrile (NBR)	T14380T0012
	Fluorocarbon (FKM)	T14380T0022
	Silicone (VMQ)	T14380T0032
	Type 67CF, 67CFR, 67CFS, or 67CFSR	
	Nitrile (NBR)	T14057T0042
	Fluorocarbon (FKM)	T14057T0022
	Silicone (VMQ)	T14057T0032
5	Dripwell	
	Type 67CF or 67CFR, Aluminum	
	Standard	T21040T0012
	Large Capacity, manual drain	GE34605X012
	Large Capacity, automatic drain	GE34606X012
	Type 67CFS or 67CFSR, CF3M/CF8M Stainless steel	
	Standard	20C1726X012
	Large Capacity, manual drain	GE34607X012
	Large Capacity, automatic drain	GE31792X012
6*	Filter Element	
	(Types 67CF, 67CFR, 67CFS, and 67CFSR)	
	Polyethylene (5 microns) **(standard)**	GE32761X012
	Glass fiber (5 microns)	17A1457X012
	Polyvinylidene fluoride (PVDF) (40 microns)	GE32762X012
	316 Stainless steel (40 microns)	15A5967X022

*Recommended Spare Part.
1. Valve cartridge assembly includes keys 10, 11, 12, 13, 14, and 15.
Inconel® is a marked own by Special Metals Corporation.
Rynite® is a marked owned by E.I. du Pont de Nemours and Co.

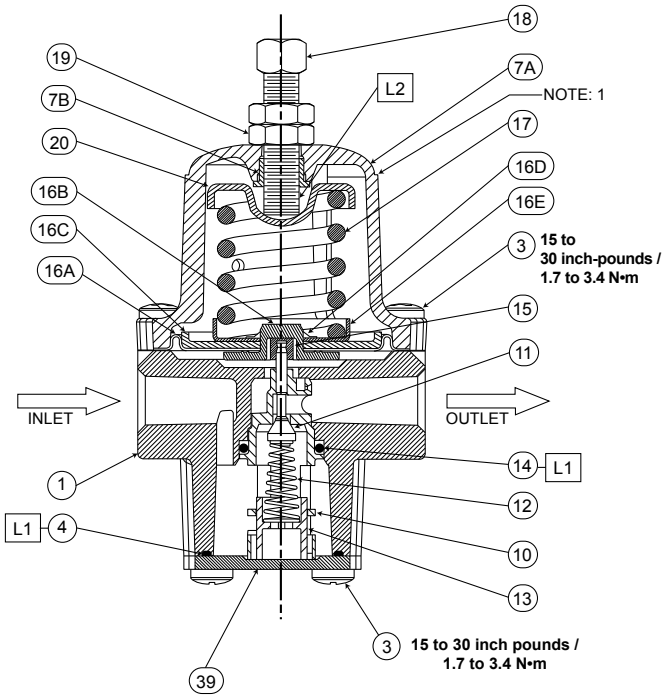

Figure 3. *Type 67C or 67CR Assembly*

Key	Description	Part Number
7	Spring Case Assembly	
	Type 67C, 67CR, 67CF, or 67CFR, Aluminum/Steel	
	Drilled hole vent **(standard)**	T14070T0012
	Single hole vent	T14070T0022
	Type 67CS, 67CSR, 67CFS, or 67CFSR, CF3M/CF8M Stainless steel	20C1727X012
9	Filter Retainer	
	Type 67CF or 67CFR, Zinc-plated	T14052T0012
	Type 67CFS or 67CFSR, 316 Stainless steel	T14052T0022
10*(1)	Valve Cartridge	T80434T0012
11*(1)	Valve Plug	
	Type 67C, 67CR, 67CF, or 67CFR	
	Brass stem, Nitrile (NBR) plug	T14053T0012
	Aluminum stem, Fluorocarbon (FKM) plug	T14053T0022
	Aluminum stem, Nitrile (NBR) plug	T14053T0032
	Type 67CS, 67CSR, 67CFS, or 67CFSR	
	Stainless steel stem, Nitrile (NBR) plug	T14053T0042
	Stainless steel stem, Fluorocarbon (FKM) plug	T14053T0052
12*(1)	Valve Spring	
	Type 67C, 67CR, 67CF, or 67CFR	
	302 Stainless steel	T14105T0012
	Inconel® (NACE)	T14116T0012
	Type 67CS, 67CSR, 67CFS, or 67CFSR, Inconel® (NACE)	T14116T0012
13*(1)	Valve Retainer, Rynite®	T14071T0012
14*(1)	O-ring	
	Nitrile (NBR)	T14063T0012
	Fluorocarbon (FKM)	T14063T0022
	Silicone (VMQ)	T14063T0032
15*(1)	Soft Seat	
	Nitrile (NBR)	T14055T0012
	Fluorocarbon (FKM)	T14055T0022

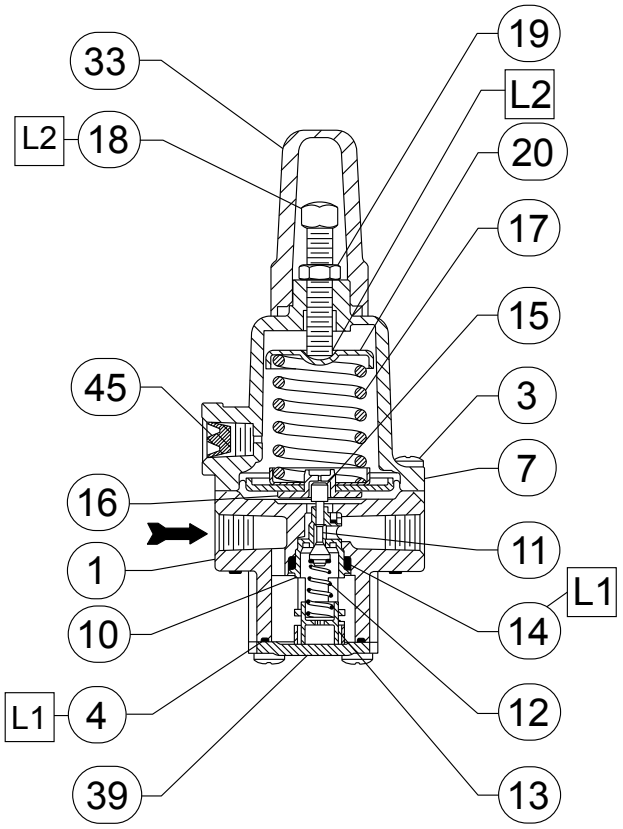

GE03521

☐ **APPLY LUBRICANT (L):**
L1 = MULTI-PURPOSE POLYTETRAFLUOROETHYLENE (PTFE) LUBRICANT
L2 = ANTI-SEIZE COMPOUND

Figure 4. *Type 67CS or 67CSR Assembly*

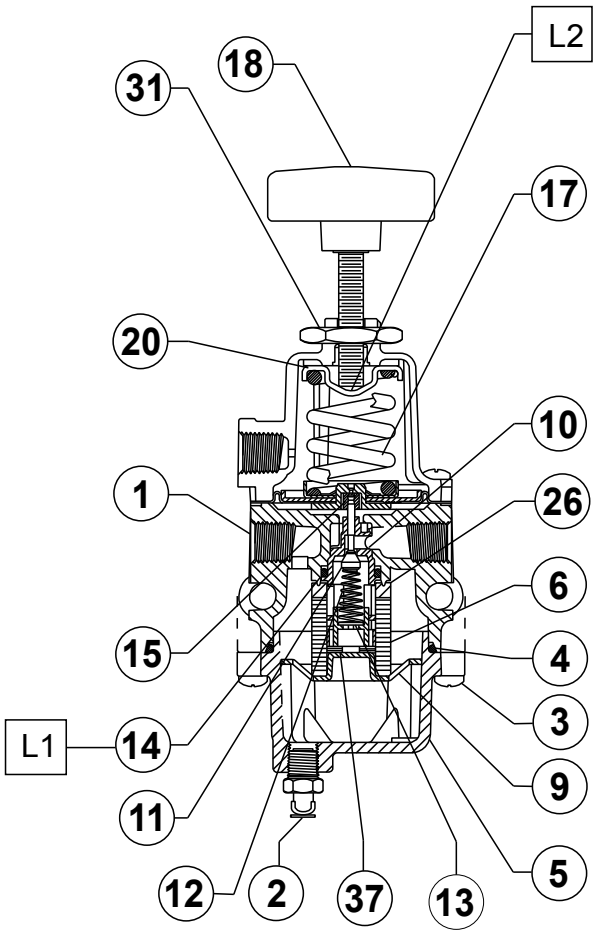

T40580

☐ **APPLY LUBRICANT (L):**
L1 = MULTI-PURPOSE POLYTETRAFLUOROETHYLENE (PTFE) LUBRICANT
L2 = ANTI-SEIZE COMPOUND

Figure 5. *Type 67CF or 67CFR Assembly*

Key	Description	Part Number
16*	Diaphragm Assembly	
	Type 67C or 67CF (without relief)	
	Nitrile (NBR)	T14119T0022
	Fluorocarbon (FKM)	T14119T0042
	Type 67CR or 67CFR (with relief)	
	Nitrile (NBR)	T14119T0012
	Fluorocarbon (FKM)	T14119T0032
	Silicone (VMQ)	T14119T0052
	Type 67CS or 67CFS (without relief)	
	Nitrile (NBR)	T14119T0062
	Fluorocarbon (FKM)	T14119T0072
	Type 67CSR or 67CFSR (with relief)	
	Nitrile (NBR)	T14119T0082
	Fluorocarbon (FKM)	T14119T0092
	Silicone (VMQ)	T14119T0102
17	Spring	
	Type 67C, 67CR, 67CF, or 67CFR,	
	Plated steel **(standard)**	
	0 to 20 psig / 0 to 1.4 bar, Green stripe	GE07809T012
	0 to 35 psig / 0 to 2.4 bar, Silver	T14059T0012
	0 to 60 psig / 0 to 4.1 bar, Blue stripe	T14058T0012
	0 to 125 psig / 0 to 8.6 bar, Red stripe	T14060T0012

Key	Description	Part Number
17	Spring (continued)	
	Type 67CR or 67CFR (NACE), Inconel® (NACE)	
	0 to 35 psig / 0 to 2.4 bar, Silver stripe	T14113T0012
	0 to 60 psig / 0 to 4.1 bar, Blue	T14114T0012
	0 to 125 psig / 0 to 8.6 bar, Red	T14115T0012
	Type 67CS, 67CSR, 67CFS or	
	67CFSR, Inconel® (NACE)	
	0 to 20 psig / 0 to 1.3 bar, Green	10C1729X012
	0 to 35 psig / 0 to 2.4 bar, Silver stripe	T14113T0012
	0 to 60 psig / 0 to 4.1 bar, Blue	T14114T0012
	0 to 125 psig / 0 to 8.6 bar, Red	T14115T0012
	0 to 150 psig / 0 to 10.3 bar, Black	10C1730X012
18	Adjusting Screw	
	Type 67C, 67CR, 67CF, or 67CFR,	
	Zinc-plated steel	
	For standard spring case	
	Square head **(standard)**	T14061T0012
	Handwheel	T14102T0012
	Wire seal (not shown)	T14104T0012
	For spring case with 1/4 NPT vent,	
	Zinc-plated steel	
	Square head for closing cap,	T14101T0012
	Handwheel	T14103T0012
	Wire seal (not shown)	T14198T0012

*Recommended Spare Part.
Inconel® is a marked own by Special Metals Corporation.

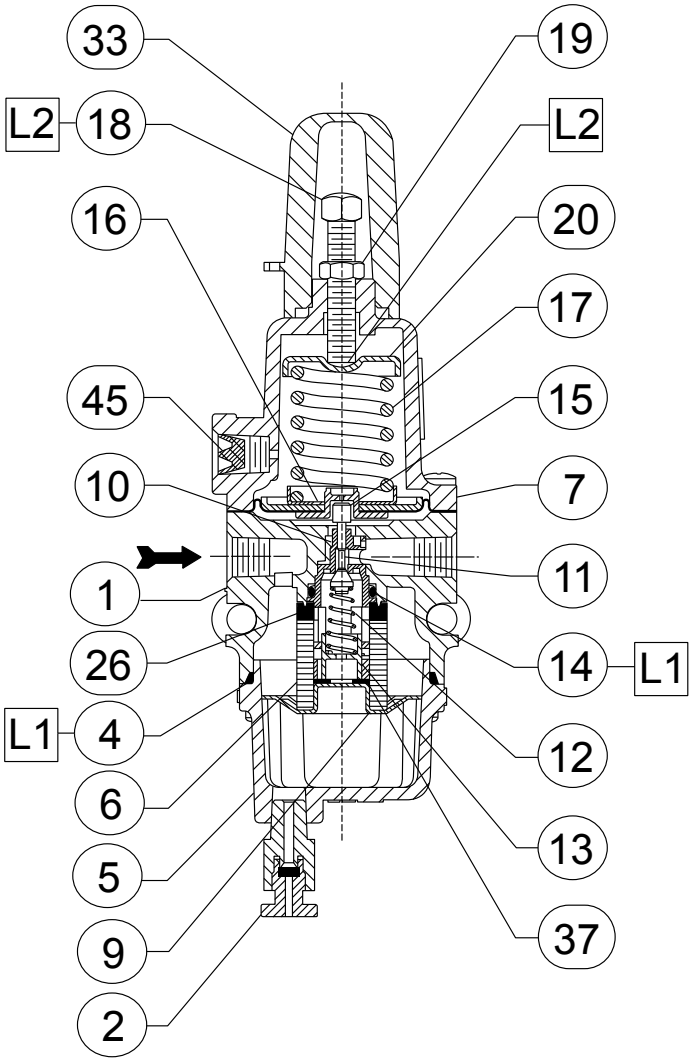

☐ APPLY LUBRICANT (L):
L1 = MULTI-PURPOSE POLYTETRAFLUOROETHYLENE (PTFE) LUBRICANT
L2 = ANTI-SEIZE COMPOUND

Figure 6. *Type 67CFS or 67CFSR Assembly*

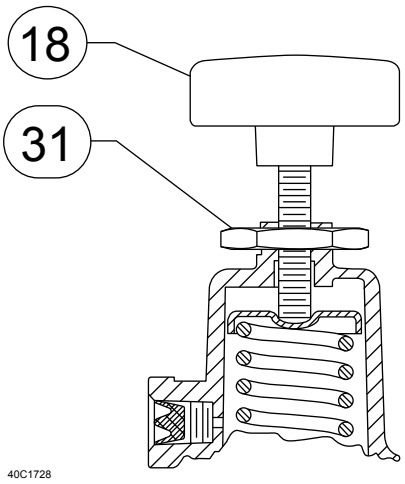

Figure 7. *67C Series Optional Panel Mount*

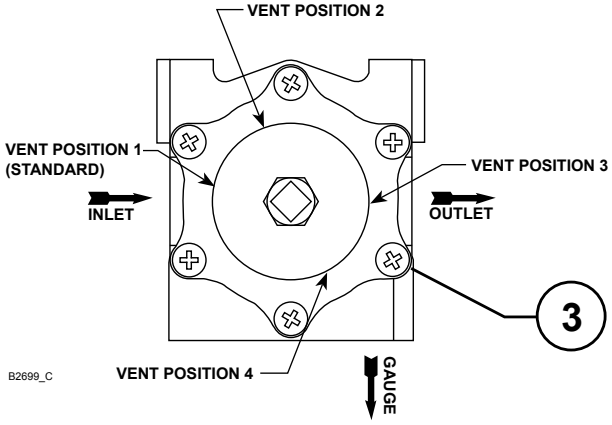

Figure 8. *67C Series Spring Case Vent Positions*

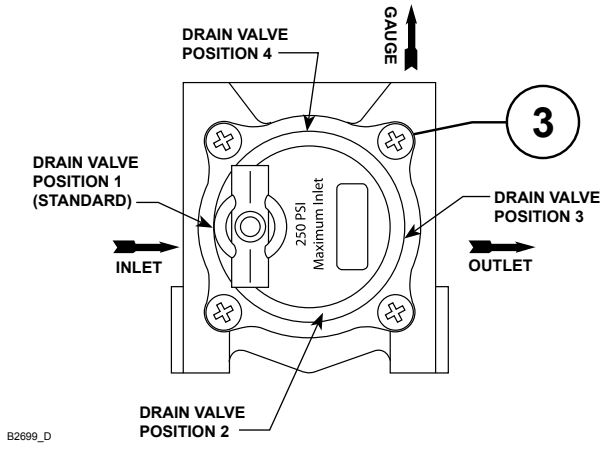

Figure 9. *Types 67CF, 67CFR, 67CFS, and 67CFSR Drain Valve Positions*

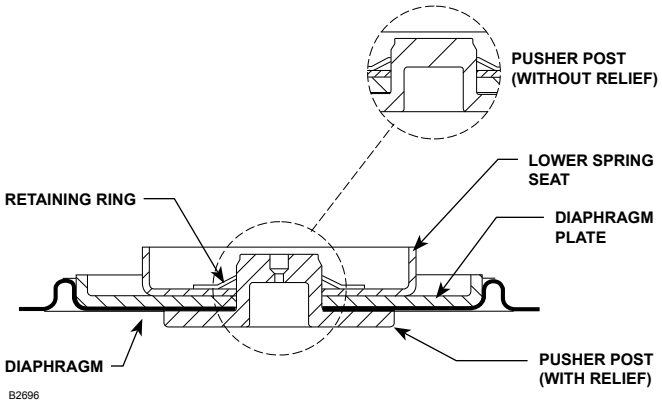

Figure 10. *Diaphragm Assembly (key 16)*

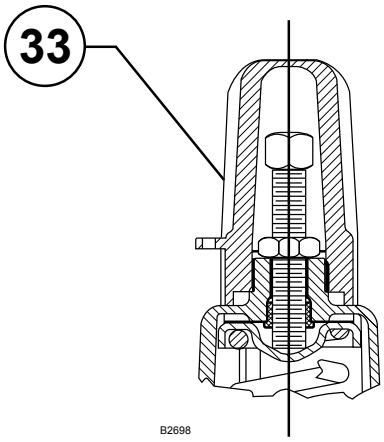

Figure 11. *Optional Closing Cap*
[Only Available with the 1/4-inch / 6.4 mm Spring Case Vent]

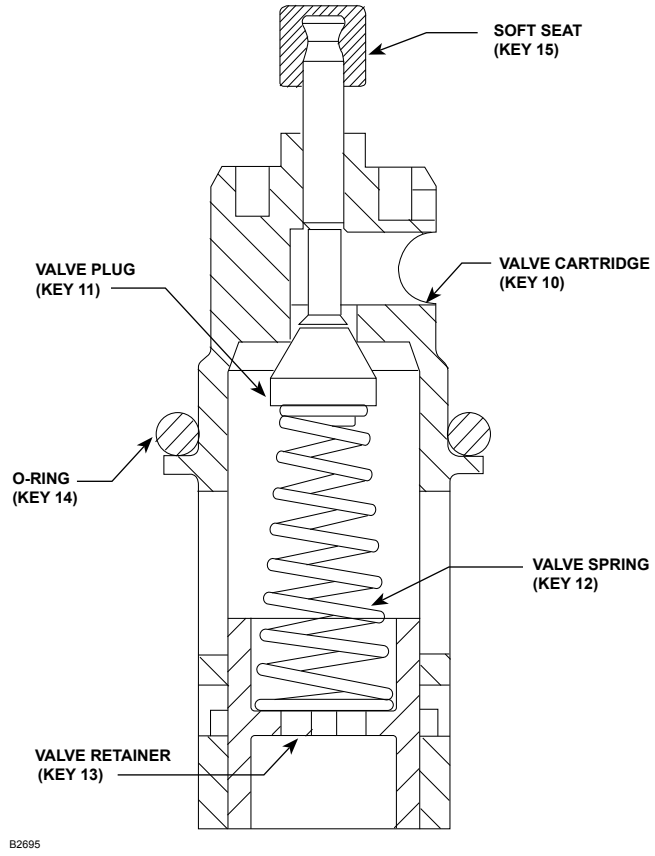

Figure 12. *Valve Cartridge Assembly*

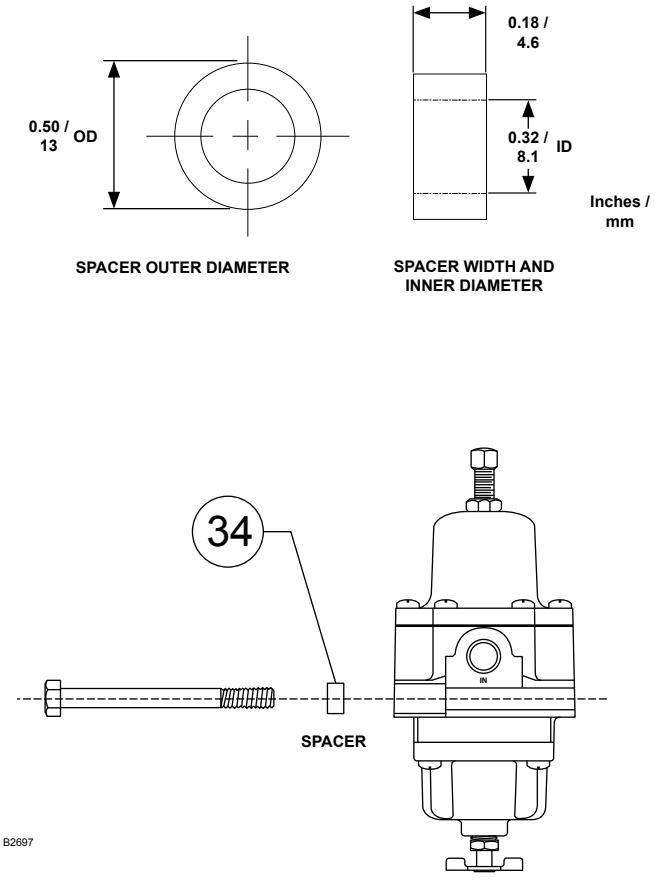

Figure 13. *Spacer Diameter and Assembly*
(For Installing in an Existing Installation
if the Mounting Bolts are too Long)

Key	Description	Part Number
18	Adjusting Screw (continued)	
	Type 67CS, 67CSR, 67CFS, or 67CFSR	
	Square head with or without closing cap,	
	316 Stainless steel	T14101T0022
	Handwheel, Zinc-plated steel	T14103T0012
19	Locknut	
	Type 67C, 67CR, 67CF, or 67CFR	
	Zinc-plated steel	1A946324122
	316 Stainless steel	1A9463X0042
	Type 67CS, 67CSR, 67CFS, or 67CFSR	
	316 Stainless steel	1A9463X0042
20	Upper Spring Seat	
	Type 67C, or 67CR only	
	1/4 NPT Vent	T14051T0042
	Type 67C, 67CR, 67CF, or 67CFR	
	Standard	T14051T0012
22	Pressure Gauge (not shown)	
	Type 67C, 67CR, 67CF, or 67CFR, Brass	
	0 to 30 psig / 0 to 2.1 bar / 0 to 0.2 MPa	11B8579X022
	0 to 60 psig / 0 to 4.1 bar / 0 to 0.4 MPa	11B8579X032
	0 to 160 psig / 0 to 11.0 bar / 0 to 1.1 MPa	11B8579X042
	For all types, Stainless steel	
	0 to 30 psig / 0 to 2.1 bar / 0 to 0.2 MPa	11B9639X012
	0 to 60 psig / 0 to 4.1 bar / 0 to 0.4 MPa	11B9639X022
	0 to 160 psig / 0 to 11.0 bar / 0 to 1.1 MPa	11B9639X032
23	1/4-inch / 6.4 mm Pipe Plug (not shown)	
	Type 67C, 67CR, 67CF, or 67CFR	
	Socket head, Steel	1C333528992
	For all types	
	Hex head, Stainless steel	1A767535072
24	Tire Valve (not shown)	
	Type 67C, 67CR, 67CF, or 67CFR	1H447099022

*Recommended Spare Part.

Key	Description	Part Number
26*	Filter Gasket	
	Type 67CF, 67CFR, 67CFS, or 67CFSR	
	with Nitrile (NBR) O-ring	T14081T0012
	with Fluorocarbon (FKM) O-ring	T14081T0022
30	NACE Tag (not shown), 18-8 Stainless steel	19A6034X012
31	Panel Mounting Nut, 303 Stainless steel	10B2657X012
32	Wire Seal (not shown)	
	Type 67C or 67CR	
	304 Stainless steel	1U7581000A2
33	Closing Cap, Resin	23B9152X012
34	Spacer (2 required) (Figure 13)	
	Type 67CF or 67CFR, Steel	T14123T0012
	Type 67CFS or 67CFSR, 18-8 Stainless steel	T14123T0022
37*	Thrust Washer	
	(Type 67CF, 67CFR, 67CFS, or 67CFSR)	
	with Nitrile (NBR) O-rings	T14196T0012
	with Fluorocarbon (FKM) O-rings	T14196T0022
39	Bottom Plate, 316 Stainless steel	
	Type 67C or 67CR	GE03520XRG2
	Type 67CS or 67CSR	GE03520X012
45	Screen Vent, 18-8 Stainless steel	
	Type 67CS, 67CSR, 67CFS, or 67CFSR	0L078343062

Parts for Mounting on Fisher® 2500 Series Controller (Type 67CF or 67CFR)

Key	Description	Part Number
35	Mounting adaptor plate, Steel (not shown)	T21043T0012
36	O-ring, Nitrile (NBR) (not shown)	1E591406992
38	Gasket, Neoprene (CR) (not shown)	1C898603012

Industrial Regulators

Emerson Process Management
Regulator Technologies, Inc.

USA - Headquarters
McKinney, Texas 75069-1872, USA
Tel: +1 800 558 5853
Outside U.S. +1 972 548 3574

Asia-Pacific
Shanghai 201206, China
Tel: +86 21 2892 9000

Europe
Bologna 40013, Italy
Tel: +39 051 419 0611

Middle East and Africa
Dubai, United Arab Emirates
Tel: +971 4811 8100

Natural Gas Technologies

Emerson Process Management
Regulator Technologies, Inc.

USA - Headquarters
McKinney, Texas 75069-1872, USA
Tel: +1 800 558 5853
Outside U.S. +1 972 548 3574

Asia-Pacific
Singapore 128461, Singapore
Tel: +65 6770 8337

Europe
Bologna 40013, Italy
Tel: +39 051 419 0611
Chartres 28008, France
Tel: +33 2 37 33 47 00

TESCOM

Emerson Process Management
Tescom Corporation

USA - Headquarters
Elk River, Minnesota 55330-2445, USA
Tels: +1 763 241 3238
+1 800 447 1250

Europe
Selmsdorf 23923, Germany
Tel: +49 38823 31 287

Asia-Pacific
Shanghai 201206, China
Tel: +86 21 2892 9499

For further information visit www.fisherregulators.com

The Emerson logo is a trademark and service mark of Emerson Electric Co. All other marks are the property of their prospective owners. Fisher is a mark owned by Fisher Controls International LLC, a business of Emerson Process Management.

The contents of this publication are presented for informational purposes only, and while every effort has been made to ensure their accuracy, they are not to be construed as warranties or guarantees, express or implied, regarding the products or services described herein or their use or applicability. We reserve the right to modify or improve the designs or specifications of such products at any time without notice.

Emerson Process Management Regulator Technologies, Inc. does not assume responsibility for the selection, use or maintenance of any product. Responsibility for proper selection, use and maintenance of any Emerson Process Management Regulator Technologies, Inc. product remains solely with the purchaser.

EMERSON™
Process Management

©Emerson Process Management Regulator Technologies, Inc., 2003, 2013; All Rights Reserved

Type 67CFR Instrument Supply Regulator


W7423-1

Mounted on a Control Valve Controller


W7412

With Optional Pressure Gauge

- **Typically Used to Provide Reduced Pressures to Pneumatic and Electro-Pneumatic Instruments**
- **DN 8 or 1/4-Inch NPT Screwed Connections**
- **Temperatures to 149°C or 300°F**
- **Inlet Pressures to 17.2 Bar or 250 Psig**
- **Outlet Pressure Settings from 0 to 6.9 Bar or 0 to 100 Psig**
- **Air and Process Gas Service**

Body Sizes, End Connections, and Materials 6-28
Flow Coefficients 6-28
Temperatures 6-28
Pressures 6-28
Options 6-28

Industrial Regulators

67CFR

Type 67CFR regulators are typically used to provide reduced pressures to pneumatic and electro-pneumatic instruments. These regulators have internal filters with a fee area of 12 times the pipe area. The internal relief valve has a soft seat.

Other applications include providing reduced pressure for air chucks, air jets, and spray guns.

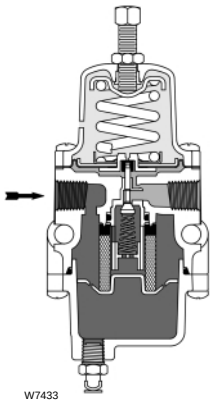

- ***Compact, Lightweight Design***
- ***In-Line Maintenance***
- ***Internal Relief***
- ***Integral Filter***
- ***Second Outlet for Gauge***
- ***Pressure Gauges Available***
- ***Dripwell with Drain Valve***

Body Sizes, End Connections, and Materials

Body Sizes and End Connection	Body, Spring Case, and Dripwell	Filter	Diaphragm and Valve Plug	Gasket
1/4 NPT screwed	Aluminum	Cellulose or stainless steel or glass	Nitrile, fluoroelastomer (FKM), or silicone (do not use silicone with hydrocarbons)	Composition

6

Flow Coefficients for Relief Valve Sizing

Wide-Open C_g: 11.7
Wide-Open C_v: 0.36
C_1: 32.2

Temperatures

Nitrile: –29 to 82°C or –20 to 180°F (Optional is –40 to 82°C or –40 to 180°F)

Fluoroelastomer (FKM): –18 to 149°C or 0 to 300°F

Silicone (VMQ): –51 to 82°C or –60 to 180°F

Pressures

Maximum Inlet Pressure (Body Rating): 17.2 bar or 250 psig

Maximum Outlet (Casing) Pressure: 3.4 bar or 50 psi above outlet pressure setting

Outlet Pressure Ranges

OUTLET PRESSURE RANGES		CONTROL SPRING DATA	
Bar	Psig	Part Number	Color
0 to 1.4	0 to 20	T14130T0012	Green stripe
0 to 2.4	0 to 35	T14059T0012	Silver
0 to 4.1	0 to 60	T14058T0012	Blue stripe
0 to 8.6	0 to 125	T14050T0012	Red stripe

Options

Pressure gauge in side outlet, handwheel adjusting screw, panel mounting, NACE (National Association of Corrosion Engineers) or ammonia service construction, triple-scale outlet pressure gauge

***Only a brief overview is presented here. For more detailed information, such as capacities and dimensions, refer to the companion catalog, the Fisher* Regulator Handbook.**



Description & Features:

- Most economical, all-purpose pressure gauge
- 1.5" (40mm) to 4" (100mm) sizes
- Friction bezel rings
- Black steel case
- Brass internals
- ±3-2-3% accuracy
- CRN registered
- 5 year warranty

Applications:

- Plumbing, heating, air conditioning, pneumatic, hydraulic, water tanks, air compressors, OEM

Specifications	
Dial	1.5” (40mm), 2” (50mm), 2.5” (63mm), 4” (100mm) white aluminum with black and red markings
Case	Steel, painted black (plastic available)
Lens	1.5” (40mm), 2” (50mm), 2.5” (63mm): Polycarbonate 4” (100mm): Glass
Ring	1.5” (40mm), 2” (50mm): Steel, painted black 2.5” (63mm), 4” (100mm): Steel, chrome plated
Socket	Brass
Connection	⅛” NPT or ¼” NPT standard
Bourdon Tube	Phosphor bronze
Movement	Brass
Pointer	Aluminum, black
Welding	Silver alloy
Over-Pressure Limit	25% of full scale value
Working Pressure	Maximum 75% of full scale value
Ambient/Process Temperature	-40°F to 150°F (-40°C to 65°C)
Accuracy	±3-2-3% ANSI/ASME Grade B
Enclosure Rating	IP52

Order Codes (products in bold are normally in stock)

Dial Size	1.5" (40mm)		2" (50mm)					2.5" (63mm)		4" (100mm)
Connection	1/8" Bottom	1/8" Centre Back	1/8" Centre Back	1/4" Centre Back	1/8" Bottom	1/4" Bottom	1/4" psi Only Bottom	1/4" Centre Back	1/4" Bottom	1/4" Bottom
Case Material	Steel	Steel	Steel	Steel	Steel	Steel	Plastic	Steel	Steel	Steel
30" Hg. vacuum/kPa	**PEM1297**	**PEM1397**	**PEM1424**	**PEM1428**	**PEM195**	**PEM135**	**PEM1398**	**PEM1431**	**PEM210**	**PEM220**
30"/0/15 psi/kPa	-	-	-	-	-	-	-	-	**PEM152**	-
30"/0/30 psi/kPa	-	-	-	-	-	-	-	-	**PEM153**	-
30"/0/60 psi/kPa	-	-	-	-	-	-	-	-	**PEM154**	-
30"/0/100 psi/kPa	-	-	-	-	-	-	-	-	**PEM155**	-
0 - 15 psi/kPa	**PEM1299**	**PEM1399**	**PEM1425**	**PEM1429**	**PEM196**	**PEM136**	-	**PEM1436**	**PEM211**	-
0 - 30 psi/kPa	**PEM1300**	**PEM1400**	**PEM1402**	**PEM1403**	**PEM206**	**PEM199**	**PEM200**	**PEM1437**	**PEM212**	**PEM221**
0 - 60 psi/kPa	**PEM1301**	**PEM1401**	**PEM1404**	**PEM1405**	**PEM207**	**PEM201**	**PEM194**	**PEM1438**	**PEM213**	**PEM222**
0 - 100 psi/kPa	**PEM1320**	**PEM1420**	**PEM1406**	**PEM1407**	**PEM208**	**PEM202**	-	**PEM1439**	**PEM214**	**PEM223**
0 - 160 psi/kPa	**PEM1321**	**PEM1421**	**PEM1408**	**PEM1409**	**PEM197**	**PEM203**	-	**PEM1440**	**PEM215**	**PEM224**
0 - 200 psi/kPa	**PEM1322**	**PEM1422**	**PEM1426**	**PEM1410**	**PEM209**	**PEM204**	-	**PEM1441**	**PEM216**	**PEM225**
0 - 300 psi/kPa	PEM1323	**PEM1423**	**PEM1427**	**PEM1411**	**PEM198**	**PEM205**	-	**PEM1442**	**PEM217**	**PEM226**
0 - 400 psi/kPa	-	-	-	-	-	-	-	-	**PEM219**	-
0 - 600 psi/kPa	-	-	-	-	-	-	-	PEM3413	**PEM218**	-
0 - 1,000 psi/kPa	-	-	-	-	-	-	-	-	**PEM290**	-
0 - 3,000 psi/kPa	-	-	-	-	-	-	-	-	**PEM291**	-
0 - 5,000 psi/kPa	-	-	-	-	-	-	-	-	**PEM292**	-

Other ranges and connection sizes available upon request. For scale change, refer to How to Order Guide for scale codes. Lead free construction available. **For options, attach suffix to end of order code: i.e. PEM1399-GL15 for 1.5" GLASS LENS.**

Option suffix:

GL15 = glass lens for 1.5" dial
GL2= glass lens for 2" dial
GL25 = glass lens for 2.5" dial

ECASE15SS BK = 1.5" SS back case connection
ECASE15SS BTM = 1.5" SS bottom connection
ECASE20SSBK = 2" SS Case back connection
ECASE20SSBTM = 2" SS Case bottom connection

Note: For 1.5" to 2" SS internals, please see PRL Series Regulator Gauges.

1.5” Bottom Connection

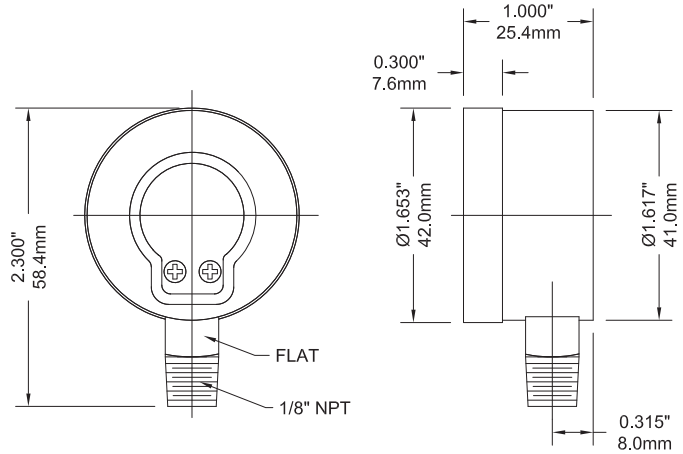

1.5” Back Connection

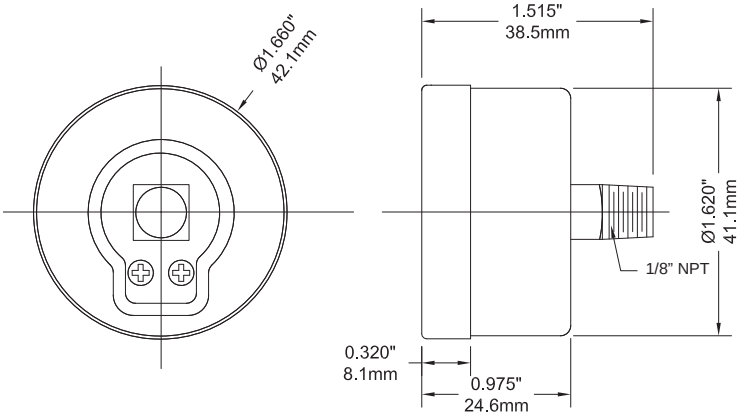

2” Bottom Connection

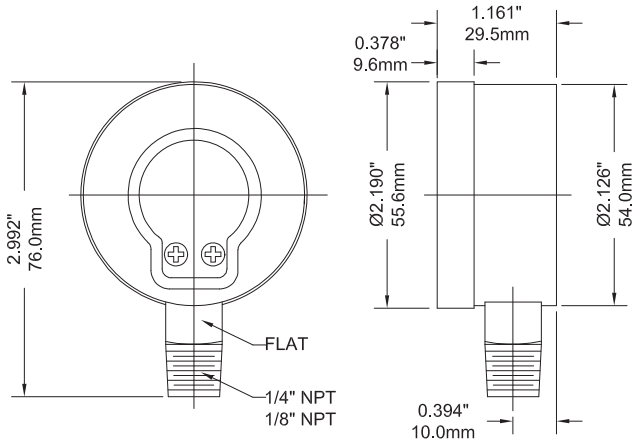

2” Back Connection

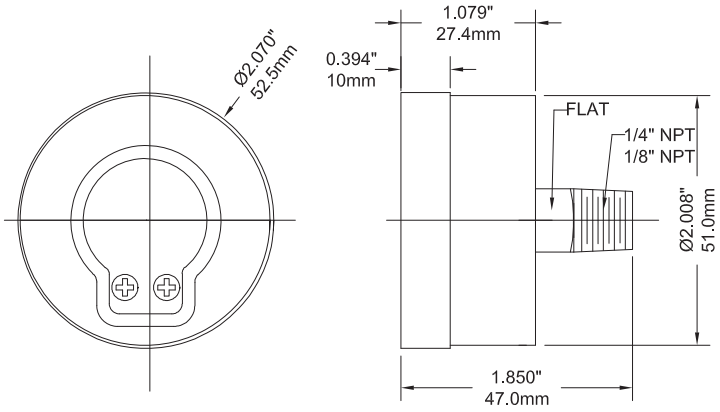

2.5” Bottom Connection

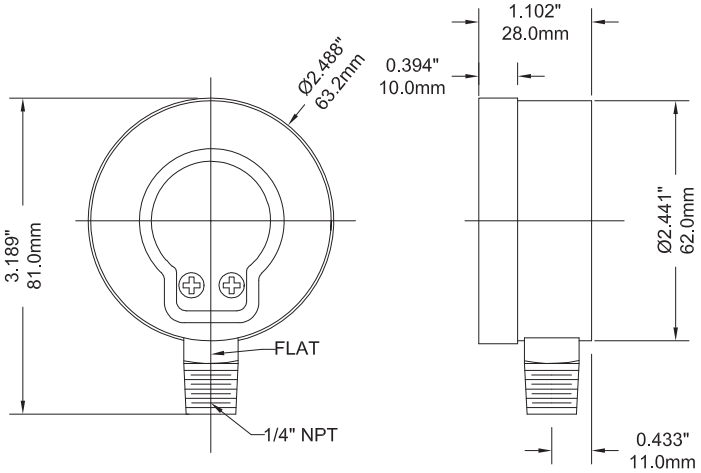

2.5” Back Connection

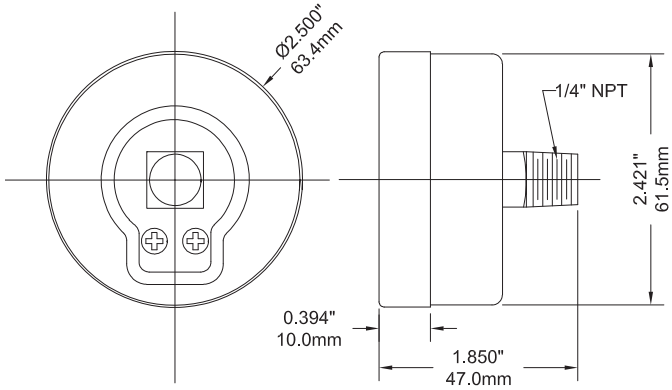

4” Bottom Connection

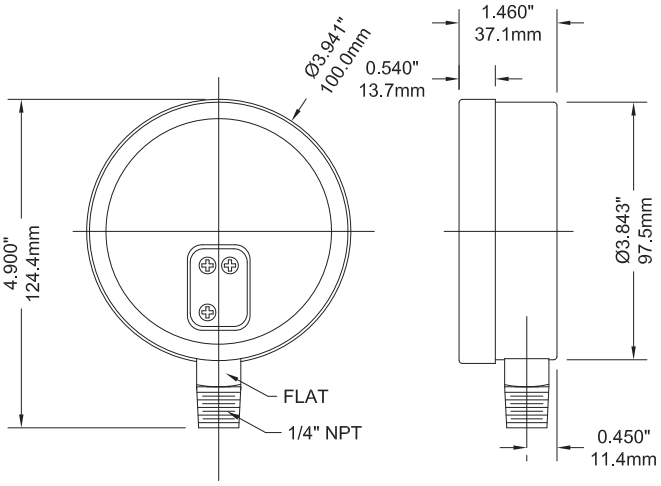

5Blue
Process Equipment Inc.

F9 Approval Agency Documents, Certificates & Labels as Applicable (e.g. Electrical Equipment Cert for Hazardous Area)

2303-8th Street, Nisku Alberta, T9E-7Z3 CANADA

14920-135 Avenue
Edmonton, AB Canada T5V 1R9

Telephone: 780-440-4455
www.intertek.com

LIMITED PRODUCTION CERTIFICATION REPORT

Report Number	101607580COQ-001	Issued: 8-April-2014
		Revised: N/A

Standard(s)	-CAN/CSA-C22.2 No. 14-13; Issued March 1, 2013- Industrial Control Equipment. -CSA C22.2 No. 213-M1987 (R-2013)- Non-incendive Electrical Equipment for Use in Class I, Division 2 Hazardous Locations; Gen. Instruction # 1, 1987

Applicant	Tarpon Energy Services ltd	Manufacturer	Tarpon Energy Services ltd
Address	1409, 6 th Street Nisku, AB T9E 7M7	Address	1409, 6 th Street Nisku, AB T9E 7M7
Country	Canada	Country	Canada
Contact	Mr. Brent McCord	Contact	Mr. Brent McCord
Phone	(780)-955-1310	Phone	(780)-955-1310
FAX	NA	FAX	NA
Email	bmccord@tarponenergy.com	Email	bmccord@tarponenergy.com

Product Description:

Product	Class I Zone 2 Group IIA, T3 • Low Pressure Inlet Separator Building. • High Pressure Inlet Separator Building. • Compressed Cardium Gas Separator Building. • Chemical Injection Pump Building
Brand name	NA
Description	The product covered by this report are the following: • Low Pressure Inlet Separator Building. • High Pressure Inlet Separator Building. • Compressed Cardium Gas Separator Building. • Chemical Injection Pump Building
Models	Same as Product
Model Similarity	NA
Ratings	120/575 V, 30/15A, 3Φ. Class I Zone 2 Group IIA, T3
Other Ratings	NA

Labeling:

Model/Building	Job No.	LPC No.
Low Pressure Inlet Separator	13010163	713387 (CSA #14, 213)
High Pressure Inlet Separator	13010163A	713388 (CSA #14, 213)
Compressed Cardium Gas Separator	13010163B	713389 (CSA #14, 213)
Chemical Injection Pump	13010135	713390 (CSA #14, 213)

This information is for the exclusive use of Intertek's Client and is provided pursuant to the agreement between Intertek and its Client. Intertek's responsibility and liability are limited to the terms and conditions of the agreement. Intertek assumes no liability to any party, other than to the Client in accordance with the agreement, for any loss, expense, or damage occasioned by the use of this information. Any observations and results in this report are relevant only to the sample evaluated. Only the Client is authorized to copy and distribute this information and only then in its entirety.

14920-135 Avenue
Edmonton, AB Canada T5V 1R9

Telephone: 780-440-4455
www.intertek.com

Test Summary:

Evaluation Period	April 7, 2014 to April 8, 2014	Project No.	G101607580
The building is an assembly of approved components, no testing is performed			

Conclusion:

8.1 Signatures			
A representative sample of the product covered by this report has been evaluated and found to comply with the applicable requirements of the standards indicated above. Please note, this Report does not represent authorization for the applicant or manufacturer to apply Intertek Certification Marks.			
Completed by:	Rufino (Raffy) Dalmacio	Reviewed by:	Andrew Browne, P Eng
Title:	Hazardous Locations Project Technical Analyst	Title:	Sr. Project Engineer
Signature:	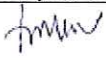	Signature:	

14920-135 Avenue
Edmonton, AB Canada T5V 1R9

Telephone: 780-440-4455
www.intertek.com

F11 CRN Number(s) from Local Authority having Jurisdiction all for Pressure Equipment, Piping and Fittings as per CSA B.51 Code

2303-8th Street, Nisku Alberta, T9E-7Z3 CANADA

See section B. QA/QC RECORDS

F14 Preservation and Storage Procedure

2303-8th Street, Nisku Alberta, T9E-7Z3 CANADA

Instrument and Electrical Panel – Al items that have been internally or externally preserved shall be tagged or marked as such. Appropriate inspection reports must be completed after each inspection. All issues reported must be addressed properly in a timely manner.

Item	Freq (Wks)	Description	Materials
1	12	Protect all equipment faces, lamps, switches, and panel meters on switchboards, control and instrument/electrical panels until installed or practical	
2	4	Anti-condensation space heaters on instrument/electrical panels shall be energized (within 1 week of receipt), if not stored in a heated warehouse	
3	12	Check instrument/electrical panels, cabinets or boxes for water ingress; clean out if necessary	
4	12	Ensure that all openings on instrument/electrical panels, cabinets or boxes are plugged or capped (This includes all unused cable entries, process line connections and pneumatic tubing connections)	Plastic plugs and caps are acceptable
5	24	Instrument/electrical panels, cabinets and junction boxes, install Cortec VpCI-111	VpCI-111 Emitter
6	24	Instrument/electrical panels, cabinets and junction boxes, install Desiccant	Desiccant
7	24	Check Desiccant – Replace as necessary	Desiccant
8	24	Replace VpCI-111 Emitter – Replace as necessary	VpCI-111 Emitter

Manual Valves – All items that have been internally or externally preserved shall be tagged or marked as such. Appropriate inspection reports must be completed after each inspection. All issues reported must be addresses properly in a timely manner.

Item	Freq (Wks)	Description	Materials
1	12	Check external preservation of all valves	
2	12	Check that valves are clean, free of debris and moisture	
3	12	Store valves in the vertical position	
4	24	Protect all external machined surfaces and flange faces with VpCI-377 Winter-Grade or LPS 3 Premier Rust Inhibitor, or approved equivalent.	VpCI-377 Winter-Grade or LPS 3 Premier Rust Inhibitor
5	24	Flanged ends of all valves shall be protected with plastic caps or equivalent	
6	24	Threaded ends of valves shall be sealed with steel or plastic threaded plugs and welded ends with plastic caps	

PSV – All items that have been internally or externally preserved shall be tagged or marked as such. Appropriate inspection reports must be completed after each inspection. All issues reported must be addressed properly in a timely manner.

Item	Freq (Wks)	Description	Materials
1	12	Ensure PSV's are adequately protected, whether shipped internally or to and from supplier in the upright position	
2	12	Ensure PSV's inlet and outlet ports and flanges are covered and protected against ingress of dirt and foreign matter.	
3	12	Ensure PSV's spring levers are tied down and protected	
4	12	Ensure PSV's are stored in clean, dry storage area and adequately protected against moisture, corrosion and mechanical damage	

Rotary Valves - All items that have been internally or externally preserved shall be tagged or marked as such. Appropriate inspection reports must be completed after each inspection. All issues reported must be addressed properly in a timely manner.

Item	Freq (Wks)	Description	Materials
1	12	All exposed machined metal surfaces including shafts shall be protected with VpCI-377 Winter-Grade or LPS 3 Premier Inhibitor, or approved equivalent	VpCI-377 Winter-Grade or LPS 3 Premier Inhibitor
2	12	All casing vents shall be sealed to prevent condensation from entering	
3	12	Ensure all valves are covered with wood or steel blinds which shall be maintained in place until piping installation	
4	12	Fill Gear Box FULL WITH RECOMMENDED OIL (Note: gearbox comes half filled, before start-up remove oil to half way level	OEM recommended lube oil
5	24	All drains shall be checked for the presence of water. When moisture is present, the equipment shall be completely drained, flushed with solvent and refilled with OEM recommended Lube Oil	

Gear Units - All items that have been internally or externally preserved shall be tagged or marked as such. Appropriate inspection reports must be completed after each inspection. All issues reported must be addressed properly in a timely manner.

Item	Freq (Wks)	Description	Materials
1	12	Gear box casings, flanges and all exposed metal surfaces including shafts shall be protected with VpCI-377 Winter-Grade or LPS 3 Premier Rust Inhibitor, or approved equivalent	VpCI-377 Winter-Grade or LPS 3 Premier Rust Inhibitor
2	12	Gear unit shafts and couplings shall be wrapped with preservative-impregnated cloth	Preservative-Impregnated Cloth
3	12	All threaded openings shall be sealed with steel plugs or caps	Assorted plugs and caps
4	12	All casing vents shall be sealed to prevent condensation from entering	
5	12	Ensure all gear unit nozzles are covered with wood or steel blinds (INCLUDING GASKETS) which shall be maintained in place until piping installation	
6	12	Fill gear box unit housings with preservation oil, where applicable VpCI-322 oil additive (10% by volume) or Shell Turbo T 68	VpCI-322 oil additive (10% by volume) or Shell Turbo T 68
7	24	Change preservation oil every six months and look for contamination, where applicable VpCI-322 oil additive (10% by volume) or Shell Turbo T 68	VpCI-322 oil additive (10% by volume) or Shell Turbo T 68
8	12	All drains shall be checked for the presence of water. When moisture is present, the equipment shall be completely drained, flushed with solvent and refilled with VpCI-322 oil additive (10% by volume) or Shell Turbo T 68	VpCI-322 oil additive (10% by volume) or Shell Turbo T 68
9	4	Rotate shaft 12.25 turns to redistribute grease, seal all shaft entries with waterproof tape	

Air Handling Units - All items that have been internally or externally preserved shall be tagged or marked as such. Appropriate inspection reports must be completed after each inspection. All issues reported must be addressed properly in a timely manner.

Item	Freq (Wks)	Description	Materials
1	12	All exposed metal surfaces shall be protected with VpCI-377 Winter-Grade or LPS 3 Premier Rust Inhibitor, or approved equivalent	VpCI-377 Winter-Grade or LPS 3 Premier Rust Inhibitor
2	12	Store in a well drained area that will not accumulate surface water	
3	12	Store in an area that will not get damaged	
4	12	The entire perimeter and any full height cross members of the unit must be supported by a level surface and the supporting surface must be adequate for supporting the entire weight of the unit	
5	12	Ensure all protective coverings that were provided for shipping are in place	
6	12	(Protect indoor units from rain and snow) Indoor units must be stored indoors as to not be exposed to rain or snow. Duct openings and doors do not have proper protection from the elements.	
7	12	Rotate fan 12.5 turns to redistribute grease, seal all shaft entries with water proof tape (Fan/Blower check sheet will apply)	

Shell and Tube Exchangers - All items that have been internally or externally preserved shall be tagged or marked as such. Appropriate inspection reports must be completed after each inspection. All issues reported must be addressed properly in a timely manner.

Item	Freq (Wks)	Description	Materials
1	12	Ensure all exchangers have been treated with Cortex Liquid VpCI-649 Preservation Inhibitor during Hydro testing at vendor facility	Applied by vendor
2	24	Ensure internal and external surfaces are to be free from loose scale and other foreign material that is readily removable by hand or power brush	
3	24	Water, oil or other liquids used for cleaning or hydro testing are to be drained from all units before shipment. This is not to imply that units are completely dry unless otherwise noted on the fabrication drawing.	
4	24	All un-painted and un-insulated surfaces shall be coated with VpCI-377 Winter-Grade or LPS 3 Premier rust inhibitor	VpCI-377 Winter-Grade or LPS 3 Premier Rust Inhibitor
5	24	All exposed flange faces shall be coated with VpCI-377 Winter-Grade or LPS 3 Premier rust inhibitor, or approved equivalent	VpCI-377 Winter-Grade or LPS 3 Premier Rust Inhibitor
6	24	All ANSI flange faces 12” or less shall be protected against mechanical damage with a plastic cover wired in place (Unless otherwise noted on the fabrication drawing)	
7	24	All ANSI flange faces greater than 12” shall be protected against mechanical damage with a ½” thick plywood cover wired in place (Unless otherwise noted on the fabrication drawing)	
8	24	All threaded connections shall be suitably plugged	Assorted plugs
9	24	All weep holed to be plugged with grease before shipping and shall have a ¼ NPY nipple protruding beyond the insulation by 1”	White lithium grease
10	24	All nozzles furnished with blind flanges (as specified on the drawing) shall be installed with the service gasket and bolting	

Instruments - All items that have been internally or externally preserved shall be tagged or marked as such. Appropriate inspection reports must be completed after each inspection. All issues reported must be addressed properly in a timely manner.

Item	Freq (Wks)	Description	Materials
1	12	Visually check instruments for water ingress; clean out if necessary	
2	12	Ensure that all openings on Instrumentation Equipment are plugged or capped (This includes all unused cable entries, process line connections and pneumatic tubing connections)	Metal plugs and caps

Control Valves - All items that have been internally or externally preserved shall be tagged or marked as such. Appropriate inspection reports must be completed after each inspection. All issues reported must be addressed properly in a timely manner.

Item	Freq (Wks)	Description	Materials
1	12	All exposed machined metal surfaces including shafts shall be protected with VpCI-377 Winter-Grade or LPS 3 Premier Rust Inhibitor, or approved equivalent	VpCI-377 Winter-Grade or LPS 3 Premier Rust Inhibitor
2	12	All casing vents shall be sealed to prevent condensation from entering. Plastic caps and plugs are acceptable during storage	Plastic caps and plugs
3	12	Ensure all valves are covered with wood or steel blinds which shall be maintained in place until piping installation	
4	24	If electrical equipment is included it is recommended that placing Cortec VCI-105 Emitter and unit of Desiccant followed with Cortec VCI-126 anti corrosion plastic film or shrink wrap	Cortec VCI-105 Emitter Desiccant Cartec VCI-126 anti corrosion plastic film or shrink wrap



F15 Piping and Instrumentation Diagrams

2303-8th Street, Nisku Alberta, T9E-7Z3 CANADA

002-EF-01-1681/1682
EXHAUST FANS

MAKE: RUFFNECK
MODEL: 3ACPH: EFX-12A-2HXP
MODEL: 9ACPH: EFX-16A-2HXP

002-EFM-01-1681/1682
EXHAUST FAN MOTORS

MAKE: RUFFNECK
MODEL: 3ACPH: 575/3/60 - 1/2HP - 850CFM - T3B MOTOR
MODEL: 9ACPH: 575/3/60 - 1/2HP - 1825CFM - T3B MOTOR

002-V-01-1610
CARDIUM GAS SEPARATOR

SIZE: 66" ID x 12'-0" S/S
(1676mm ID x 3658mm S/S)
MAWP: 200 PSIG @ -49/302°F / FV @ 302°F
(1379 kPag @ -45/150°C)
CA: 0.125" (3mm)

002-L-01-1683
ACTUATED LOUVRE

SIZE: 24" x 24"
PBX-4L6 PARALLEL BLADE DAMPER
c/w BELIMO 24V NFBUP-S ACTUATOR
c/w BELIMO Z5260 EXPLOSION PROOF ENCLOSURE

002-UHG-01-1680
BUILDING HEATER

MAKE: RUFFNECK
MODEL: AH-20A-A5A1-A1-2H
DUTY: 0.5 HP
575 / 3PH / 60Hz

002-UHM-01-1680
BUILDING HEATER MOTOR

MAKE: RUFFNECK
MODEL: T3B MOTOR - 50B FAN
CLASS 1D1V1&11 GROUP C&D
DUTY: 0.5 HP
575 / 3PH / 60Hz

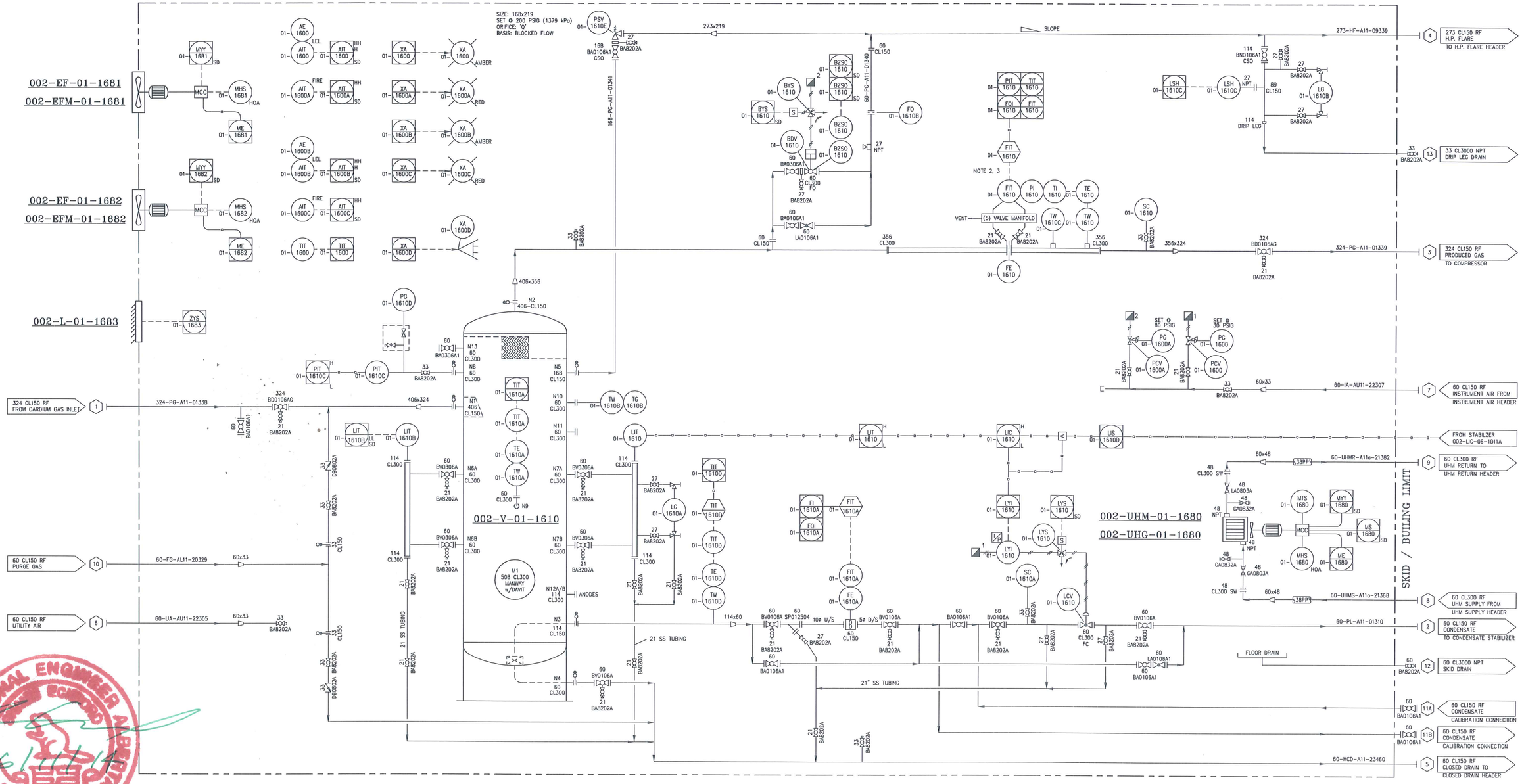

NOTES:

1. ALL INSTRUMENT TAGS SHALL READ AS FULL TAG NUMBER: 002-PIT-01-1610A FOR EXAMPLE.
2. DELETED
3. DELETED
4. CALIBRATION CONNECTION SHALL BE PIPED TO THE SKID EDGE WITH VALVE OUTSIDE THE BUILDING.

NOTE:

- ALL TRANSMITTERS AND SWITCHES ARE WIRED TO SKID EDGE JUNCTION BOX BY 5BLUE
- REMOTE CONTROL AND MONITORING TO BE BY CUSTOMER
- CARDIUM GAS SEPARATOR BUILDING # 002-BU-01-1600

NO.	REVISION	BY	CHK	DATE
4	UHG MODEL NUMBER UPDATE/AS-BUILT	RDW		26/11/14
3	AS BUILT	TBB		03/05/14
2	REVISED LOUVRE	BS		06/01/14
1	REVISED AS SHOWN	RR		17/09/13
0	ISSUED FOR CONSTRUCTION	BS		08/07/13
A	ISSUED FOR APPROVAL	BS		15/05/13

CUSTOMER REFERENCE: #407014-00120

5Blue Process Equipment Inc.
www.5Blue.com

CUSTOMER: DEVON NEC CORPORATION
JOB NO.: 5B1108-02
PROJECT: FERRIER CENTRAL OIL BATTERY - LIQUID EXTRACTION PLANT (LEP)
LOCATION: LSD 11-02-039-08 W5M
TITLE: COMPRESSED CARDIUM GAS SEPARATOR PACKAGE (002-PK-01-1600) P&ID

DRAWN	CHK	APP	SCALE	DATE	DWG NO	SHT TTL
BS			NTS	09/05/13	5B1108-02-DR-00-001	001

4

PROFESSIONAL ENGINEER ... ALBERTA
26/11/14

F16 Troubleshooting Chart

2303-8th Street, Nisku Alberta, T9E-7Z3 CANADA

This section does not apply



F19 Lube Oil/Operating Fluids Schedule

2303-8th Street, Nisku Alberta, T9E-7Z3 CANADA

This section does not apply

F20 Release for Shipping Certificate

2303-8th Street, Nisku Alberta, T9E-7Z3 CANADA

INSPECTION GROUP INC.

2836 Ellwood Dr., Edmonton, AB, Canada, T6X 0A9, Phone: (780) 450-8883 Fax: (780) 450-8884, projects@mtlinspection.com

devon

INSPECTION RELEASE REPORT

MTL Job No.	2992-4	**Release No.**	001
Devon PO#	4100001262 / FC-CPF-M022	**WBS No.**	01-00348.01.02.03
Project	Ferrier – Central Processing Facility	**Location / LSD**	Ferrier – CPF LSD: 11-02-39-08 W5M
Client Project Engineer	Alex Thompson – Engineer Shane Usipuik – QA Lead Linda Thai Mullin - Expeditor	**Phone**	403-232-7394 Alex.thompson@dvn.com 403-232-7497 Shane.usipuik@dvn.com 403-232-7086 Linda.thaimullin@dvn.com
Vendor	5Blue Process Equipment – Nisku, AB	**Vendor Job No.**	5B1109
Vendor Primary Contact	Shawn Eckford Andrew Ngo	**Phone**	780-955-2040
Equipment	(1) Pump Package w/ Skid and Building	**Tag No.**	002-BU-01-1200
Carrier		**Trailer No.**	
Packing Slip No.		**Waybill No.**	

Rev #	Inspection	Shipping	Details	Date	Inspector	Vendor
0	☒	☐	**Final inspection of building.**	Aug. 6, 14		
1	☐	☐				
2	☐	☐				
3	☐	☐				

Description of Material or Equipment

(1) Pump Package w/ Skid and Building

		Yes	No	N/A
Shop Release	The Vendor Quality Control shall ensure that all Non-Conformance Reports are signed off if applicable.	X		
Shop Release	The Vendor Quality Control shall ensure that all the documentation is forwarded to the site with the completed equipment.	X		
Shop Release	The Client Representative shall witness equipment loading and tie down and will verify that any loose material to be installed at site is secured for transport.	X		
Shop Release	The Vendor shall ensure all packaging, markings and shipping preparations are in compliance with Devon specifications, purchase order, notes and attachments.	X		

Deficiency Items if Applicable

Any omission or failure on part of the inspector to disapprove or reject any work or materials shall not be construed as acceptance of any defective work or materials.

INSPECTION GROUP INC.

2836 Ellwood Dr., Edmonton, AB, Canada, T6X 0A9, Phone: (780) 450-8883 Fax: (780) 450-8884, projects@mtlinspection.com

devon

☐ Attached ☒ N/A Comments:

Unit is available for shipping.

Dan de Groot		August 6, 14	780-297-1298	djdegroot@telus.net
Inspector	Signature	Date	Phone	E-Mail
Shaun Eckford		Aug 6/14	780-955-2040	seckford@sbne.com
Vendor Quality Representative	Signature	Date	Phone	E-Mail

ADDITIONAL NOTES	

F23 Trade Personnel Qualifications

2303-8th Street, Nisku Alberta, T9E-7Z3 CANADA

5Blue
Process Equipment Inc.

See section B30

2303-8th Street, Nisku Alberta, T9E-7Z3 CANADA



F24 Local Authority Having Jurisdiction Certificate of Package Electrical Installation per CSA Area Classification

2303-8th Street, Nisku Alberta, T9E-7Z3 CANADA

5Blue
Process Equipment Inc.

See section F9

F26 Line Designation Table

2303-8th Street, Nisku Alberta, T9E-7Z3 CANADA

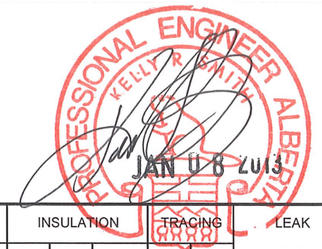

Line Designation Table - Calgary Division

Devon - Ferrier - LIQUID EXTRACTION PLANT

Devon job no. 01-00348.01

5B1108-Cardium Gas Separator Package

NPS	COMMODITY	PIPING MAT'L LINE CLASS	LINE NUMBER		PIPE SCHED OR THICK.	REFERENCE P&ID (1)	SERVICE INFORMATION				OPERATING CONDITIONS		DESIGN CONDITIONS				INSULATION			TRACING		LEAK TEST		PAINT	NDE (12)	PWHT	ABSA REQUIRED (Y/N)	SPECIAL NOTES (14)	REVISION
			PROCESS CODE	SEQUENCE			FLUID	FROM	TO	PHASE	NORMAL		UPSET (3)		CODE (4)		MDMT	TYPE (7)	MAT'L (8)	THICK.	TYPE (9)	MAINTAIN	TYPE (11)						
											PRESS kPag	TEMP °C	PRESS kPag	MAX.TEMP °C	PRESS kPag	TEMP °C	C			mm		°C		PRESS kPag					
324	PG	150	A11	1338	STD	5B1108-02-DR-00-001	VAPOUR	SKID EDGE	VESSEL	GAS	700	43			1872	66 to -29	-29						HYDRO	2940	YES	10% X-RAY	NO	YES		
60	PG	150	A11	1338	STD	5B1108-02-DR-00-001	VAPOUR	SKID EDGE	VESSEL	GAS	700	43			1872	66 to -29	-29						HYDRO	2940	YES	10% X-RAY	NO	YES		
406	PG	150	A11	1338	80	5B1108-02-DR-00-001	VAPOUR	SKID EDGE	VESSEL	GAS	700	43			1872	66 to -29	-29						HYDRO	2940	YES	10% X-RAY	NO	YES		
60	FG	150	AL11	20329	80	5B1108-02-DR-00-001	PURGE GAS	SKID EDGE	DRAIN LINE	GAS	700	10			1872	66 to -45	-29						HYDRO	2940	YES	10% X-RAY	NO	YES		
60	UA	150	AU11	22305	80	5B1108-02-DR-00-001	UTILITY AIR	SKID EDGE	33 BA8202A	GAS	830	25			1034	60 to -29	-29						HYDRO	2940	YES	10% X-RAY	NO	YES		
168	PG	150	A11	1341	STD	5B1108-02-DR-00-001	VAPOUR	VESSEL	168 BA0106A1	GAS	700	43			1960	66 to -29	-29						HYDRO	2940	YES	10% X-RAY	NO	YES		
219	HF	150	A11	9339	STD	5B1108-02-DR-00-001	VAPOUR	PSV 1610E	SKID EDGE	GAS	700	43			1580	150 to -29	-29						HYDRO	2940	YES	10% X-RAY	NO	YES		
273	HF	150	A11	9339	STD	5B1108-02-DR-00-001	VAPOUR	PSV 1610E	SKID EDGE	GAS	700	43			1580	150 to -29	-29						HYDRO	2940	YES	10% X-RAY	NO	YES		
114	HF	150	A11	9339	STD	5B1108-02-DR-00-001	VAPOUR	PSV 1610E	SKID EDGE	GAS	700	43			1580	150 to -29	-29						HYDRO	2940	YES	10% X-RAY	NO	YES		
60	PG	150/300?	A11	1340	80	5B1108-02-DR-00-001	VAPOUR	PRODUCED GAS	HP FLARE	GAS	700	43			1960	66 to -29	-29						HYDRO	2940	YES	10% X-RAY	NO	YES		
406	PG	150	A11	1339	STD	5B1108-02-DR-00-001	VAPOUR	VESSEL	METER RUN	GAS	700	43			1960	66 to -29	-29						HYDRO	2940	YES	10% X-RAY	NO	YES		
356	PG	150	A11	1339	STD	5B1108-02-DR-00-001	VAPOUR	VESSEL	REDUCER	GAS	700	43			1960	66 to -29	-29						HYDRO	2940	YES	10% X-RAY	NO	YES		
324	PG	150	A11	1339	STD	5B1108-02-DR-00-001	VAPOUR	REDUCER	SKID EDGE	GAS	700	43			1960	66 to -29	-29						HYDRO	2940	YES	10% X-RAY	NO	YES		
60	IA	150	AU11	22307	80	5B1108-02-DR-00-001	INSTRUMENT AIR	SKID EDGE	REDUCER	GAS	830	25			1034	60 to -29	-29						HYDRO	2940	YES	10% X-RAY	NO	YES		
48	UHMR	300	A11a	21382	80	5B1108-02-DR-00-001	UTILITY HEAT MEDIUM RETURN	UHG/UHM	REDUCER	LIQUID	380	65			1693	120 to -29	-29						HYDRO	2940	YES	10% X-RAY	NO	YES		
60	UHMR	300	A11a	21382	80	5B1108-02-DR-00-001	UTILITY HEAT MEDIUM RETURN	REDUCER	SKID EDGE	LIQUID	380	65			1693	120 to -29	-29						HYDRO	2940	YES	10% X-RAY	NO	YES		
60	UHMS	300	A11a	21368	80	5B1108-02-DR-00-001	UTILITY HEAT MEDIUM SUPPLY	SKID EDGE	REDUCER	LIQUID	550	90			1693	120 to -29	-29						HYDRO	2940	YES	10% X-RAY	NO	YES		
48	UHMS	300	A11a	21368	80	5B1108-02-DR-00-001	UTILITY HEAT MEDIUM SUPPLY	REDUCER	UHG/UHM	LIQUID	550	90			1693	120 to -29	-29						HYDRO	2940	YES	10% X-RAY	NO	YES		
60	PL	150	A11	1310	80	5B1108-02-DR-00-001	CONDENSATE	REDUCER	SKDI EDGE	LIQUID	700	43			1960	66 to -29	-29						HYDRO	2940	YES	10% X-RAY	NO	YES		
114	PL	150	A11	1310	80	5B1108-02-DR-00-001	CONDENSATE	VESSEL	REDUCER	LIQUID	700	43			1960	66 to -29	-29						HYDRO	2940	YES	10% X-RAY	NO	YES		
60	HCD	150	A11	23460	80	5B1108-02-DR-00-001	CONDENSATE	CLOSED DRAIN	CLOSED DRAIN HEADER	LIQUID	700	43			1960	66 to -29	-29						HYDRO	2940	YES	10% X-RAY	NO	YES		

F27 Utility Consumption List (Including Instrument Air and Electricity, UPS, Heating or Cooling Medium etc.)

2303-8th Street, Nisku Alberta, T9E-7Z3 CANADA

DEVON CARDUIM GAS SEPERATOR ELECTRICAL POWER LOAD LIST								
ITEM#	QUANTITY	MANUFACTURER	CATALOG	DESCRIPTION	VOLTAGE	AMPS	WATTS	TOTAL WATTS
1	1	Ruffneck	EFX-12A-2H-XP	Exhaust fan	575V	0.6	598	598
2	1	Ruffneck	EFX-16A-2H-XP	Exhaust fan	575V	0.6	598	598
3	1	Ruffneck	AH-20A-A5-55KW	Heater	575V	0.65	647	647
4	3	Killark	VM4L	Interior Lighting	120V	1.04	124.8	374.4
5	1	Killark	VM1L	Exterior Lighting	120V	0.42	50	50
6	1	Lumacell	RG12HZ120	Emergency Lighting	120V	0.03	3.6	3.6
7	1	Crouse Hinds	ENR21151	Receptacle	120V	6	720	720
8	2	Federal Signal	151XST-120A	Strob Lights	120V	0.35	42	84
9	2	Federal Signal	151XST-120R	Strob Lights	120V	0.35	42	84
10	1	Federal Signal	300GCX120	Horn	120V	0.67	80.4	80.4
11	0					0	0	0
12	0					0	0	0
					TOTAL PACKAGE WATTS:			3239.4

DEVON CARDUIM GAS SEPERATOR ELECTRICAL POWER LOAD LIST								
ITEM#	QUANTITY	MANUFACTURER	CATALOG	DESCRIPTION	VOLTAGE	AMPS	WATTS	TOTAL WATTS
1	2	Asco	EF8314G301-24	Solenoid	24VDC	0.025	0.6	1.2
2	1	Rosemount	644	Temperature Transmitter	24VDC	0.25	6	6
3	2	Rosemount	AH-20A-A53144-55KW	Temperature Transmitter	24VDC	0.25	6	12
4	2	Rosemount	3051CG	Pressure Transmitter	24VDC	0.25	6	12
5	2	Rosemount	5301	Level Transmitter	24VDC	0.25	6	12
6	1	Fisher	DVC6200	Posotioner	24VDC	0.003	0.072	0.072
7	1	Nuflo		Turbine Meter	24VDC	2	48	48
8	2	General Monitors	S4000CH-1-0-0-0-01-1	LEL Gas Detector	24VDC	0.2	4.8	9.6
9	2	Detronics	X5200	Flame Detector	24VDC	2	48	96
10	0					0		
11	0					0	0	0
12	0					0	0	0
					TOTAL PACKAGE WATTS:			196.872

Instrument Air Consumption List

Project Description: Compressed Cardium Gas Seperator
Project #: 5B1108
Client: Worley Parsons (Devon)

Controller Tag	Mfg	Model	Max. Allowable Pressure (psig)	Operating Pressure (psig)	Actuator Displacement (in^3)	Approx. Operating Time (s)	Positioner Steady-State Air Consumption @ 80 psig (SCFH)	Free Air Operation Capacity (SCFM) (full open/close operation)
BDV-1610	El-O-Matic	ES0350	116	80	73	3.6	14	4.77
LCV-1610	Fisher	667-40 D	90	30	113	3	14	4.21
Maximum Air Consumption (i.e. worst case)								8.98



F28 Equipment Storage & Preservation Records

2303-8th Street, Nisku Alberta, T9E-7Z3 CANADA

This section is not listed as a requirement as per Section III – SDR, Requisition FE-CPF-M022 Rev 1

2303-8th Street, Nisku Alberta, T9E-7Z3 CANADA

F29 Compliance Statement- That the Supplier Confirms Complete Compliance with the Requisition and Referenced Documents or Lists Specific Deviations and Exceptions

2303-8th Street, Nisku Alberta, T9E-7Z3 CANADA

devon

PURCHASE ORDER

PO# 4100001262

DEVON CANADA CORPORATION,
DEVON CANADA OR DEVON NEC CORPORATION
Suite 2000, 400- 3rd Avenue S.W. Calgary, Alberta, T2P 4H2

Vendor Address:
5BLUE PROCESS EQUIPMENT INC.
2303 - 8TH STREET
NISKU AB T9E 7Z3
CANADA

Contact : Kelly R. Smith
Phone : 780-955-2040

PO Number : 4100001262
Order Date : 04/24/2013
Revision Date :

Direct All Invoices To: Open Invoice
(and to the Devon Company Address)

Delivery Address:
Devon Canada, Calgary
Devon Canada Corporation
#2000, 400 3 rd Avenue S.W.
CALGARY AB T2P 4H2
CANADA

Direct All Inquiries to:
Contact : Yoosung Yang
Phone : 403-213-8030
Fax : 403-776-4231
Email ID : yoosung.yang@dvn.com

Incoterms : FCA
Incoterm Loc : FCA Nisku, AB

Payment Terms: Net 0030 Days

Shipping Instructions:
as per Devon Expediting at time of Shipping Release. Shipping terms are FCA Nisku, AB

Header Text:
as per Purchasing Notes SCM-F-1174 attached.
Payment Terms:
Net 30 days upon the receipt of a correct invoice.
Progress payments schedule as follows:
10% - Upon receipt of P&ID, GA Drawing(A2), and vessel drawings
40% - Upon receipt of major material (shell/head material)
40% - Upon readiness to ship
10% - Upon submission of all final documentation and approval by Devon QA
The following information is required for ADP OpenInvoice:
- Deptartment: FAC Jackfish (CJP)
- WBS #: 01-00348.01.02.03
The prices stated in this Purchase Order shall exclude all Canadian import duties, provincial sales taxes and federal Goods and Services Tax (GST/PST/HST). All other applicable taxes and duties shall be included in said prices. Supplier#s invoices shall clearly identify any amounts paid or charged in respect of import duties and sales taxes, regardless of governmental jurisdiction.

Item	Description	Material/ ServiceNo.	Qty	UoM	Delivery Date	Unit Price	Total
00001	HP Inlet Separator Package shall be supp		1.000	AU	10/07/2013		
	HP Inlet Separator Package shall be supp		1.000	EA		1,094,127.40	1,094,127.40

devon

PURCHASE ORDER

PO# 4100001262

DEVON CANADA CORPORATION,
DEVON CANADA OR DEVON NEC CORPORATION
Suite 2000, 400- 3rd Avenue S.W. Calgary, Alberta, T2P 4H2

Item	Description	Material/ ServiceNo.	Qty	UoM	Delivery Date	Unit Price	Total
	HP Inlet Separator Package shall be supplied as per the scope of work in Material Requisition and shall be skid mounted and tested. The separator package will have instrumentation and controls housed in pre-engineered building inclued in the scope of this package. The base price and optional prices are as below. 1. Base price: $1,040,000 2. Optional price 2.1 Cost deduct to remove 2 ESD pushbottons (-$2,076) 2.2 Cost adder to supply manway with minimum 20" ID instead of 18" ($8,600) 2.3 Cost adder to provide piping stress analysis - CAESAR II ($3,500) 2.4 Cost adder to provide electrical load requirements for exhaust fan and follow make/type ($3,353) 2.5 Cost adder to provide all electircal related items and follow supplier data list (2,670) 2.6 Cost adder to add 4 check valves and appropriate flanges, piping arrangement to accommodate tie in over LP separator skid ($9,310) 2.7 Cost adder to supply start-up and commissioning spares ($800) 2.8 Cost adder to provide four(4) nozzles for level instruments and they shall be 2" - 300# flange with DIB isolation vales ($998/ea, $3,992) 2.9 Cost adder to provide valve adjustment as per per Devon Isolation Philosophy ($13,849) 2.10 Cost deduct to remove fire detection and installation labor(-$4,875) 2.11 Cost adder to match building of HP separator to LP separator ($11,970) 2.12 Cost adder to add blinds for all inlet/outlet connection on vessels and adjustment to piping for new instrumentation and valving/bypass configulation (P&ID) ($10,296) 2.13 Cost decut to remove coating from water piping (-$17,201.60) 2.14 Cost decut to remove coating from vessel (-$27,558) 2.15 Cost adder to supply 575V/3PH/60HZ Ruffnect fan ($1,875) 2.16 Cost adder to provide latest level control philosohpy ($15,629) 2.17 Cost adder to provide false wall for shipping ($12,635) 2.18 Cost adder to supply three(3) anodes ($7,359) 2.19 Total optional price: $54,127.40 **Tag #** 002-PK-01-1000 **Line Item Total** **1,094,127.40** G/L Account : 6300150 WBS : 01-00348.01.02.03						
00002	LP Inlet Separator Package shall be supp		1.000	AU	10/14/2013		
	LP Inlet Separator Package shall be supp		1.000	EA		1,299,831.00	1,299,831.00

devon

PURCHASE ORDER

PO# 4100001262

DEVON CANADA CORPORATION,
DEVON CANADA OR DEVON NEC CORPORATION
Suite 2000, 400- 3rd Avenue S.W. Calgary, Alberta, T2P 4H2

Item	Description	Material/ ServiceNo.	Qty	UoM	Delivery Date	Unit Price	Total
	LP Inlet Separator Package shall be supplied as per the scope of work in Material Requisition and shall be skid mounted and tested. The separator package will have instrumentation and controls housed in pre-engineered building inclued in the scope of this package. The base price and optional prices are as below. 1. Base price: $1,060,000 2. Optional price 2.1 Cost deduct to remove 2 ESD pushbottons (-$2,076) 2.2 Cost adder to supply manway with minimum 20" ID instead of 18" ($8,600) 2.3 Cost adder to provide piping stress analysis - CAESAR II ($3,500) 2.4 Cost adder to provide electrical load requirements for exhaust fan and follow make/type ($3,353) 2.5 Cost adder to provide all electircal related items and follow supplier data list (2,670) 2.6 Cost adder to supply start-up and commissioning spares ($800) 2.7 Cost adder to provide four(4) nozzles for level instruments and they shall be 2" - 300# flange with DIB isolation vales ($998/ea, $3,992) 2.8 Cost adder to supply the new LP inlet separator capable of 400 bbl slug from 100 bbl slug dispatch in 6 hrs ($159,800) 2.9 Cost deduct to remove fire detection and installation labor(-$4,875) 2.10 Cost adder to add blinds for all inlet/outlet connection on vessels and adjustment to piping for new instrumentation and valving/bypass configulation (P&ID) ($10,488) 2.11 Cost decut to remove coating from water piping (-$19,075) 2.12 Cost decut to remove coating from vessel (-$36,415) 2.13 Cost adder to supply 575V/3PH/60HZ Ruffnect fan ($1,875) 2.14 Cost adder to provide latest level control philosohpy ($98,928) 2.15 Cost deduct to provide valve adjustment as per Devon Isolation Philosophy (-$11,059) 2.16 Cost adder to provide false wall for shipping ($10,374) 2.17 Cost adder to supply four(4) anodes ($8,951) 2.18 Total optional price: $239,831 **Tag #** 002-PK-01-1100 **Line Item Total** **1,299,831.00** G/L Account : 6300150 WBS : 01-00348.01.02.03						
00003	Cardium Gas Separator Package shall be s		1.000	AU	09/09/2013		
	Cardium Gas Separator Package shall be s		1.000	EA		843,665.75	843,665.75

devon

PURCHASE ORDER

PO# 4100001262

DEVON CANADA CORPORATION,
DEVON CANADA OR DEVON NEC CORPORATION
Suite 2000, 400- 3rd Avenue S.W. Calgary, Alberta, T2P 4H2

Item	Description	Material/ ServiceNo.	Qty	UoM	Delivery Date	Unit Price	Total
	Cardium Gas Separator Package shall be supplied as per the scope of work in Material Requisition and shall be skid mounted and tested. The separator package will have instrumentation and controls housed in pre-engineered building inclued in the scope of this package. The base price and optional prices are as below. 1. Base price: $834,800 2. Optional price 2.1 Cost deduct to remove 2 ESD pushbottons (-$2,076) 2.2 Cost adder to supply manway with minimum 20" ID instead of 18" ($8,600) 2.3 Cost adder to provide piping stress analysis - CAESAR II ($3,500) 2.4 Cost adder to provide electrical load requirements for exhaust fan and follow make/type ($3,353) 2.5 Cost adder to provide all electircal related items and follow supplier data list (2,670) 2.6 Cost adder to supply start-up and commissioning spares ($800) 2.7 Cost adder to provide two(2) nozzles for level instruments and they shall be 2" - 300# flange with DIB isolation vales ($998/ea, $1,996) 2.8 Cost deduct to remove fire detection and installation labor(-$4,875) 2.9 Cost adder to add blinds for all inlet/outlet connection on vessels and adjustment to piping for new instrumentation and valving/bypass configulation (P&ID) ($1,492) 2.10 Cost decut to remove coating from water piping (-$13,026) 2.11 Cost decut to remove coating from vessel (-$10,427) 2.12 Cost adder to supply 575V/3PH/60HZ Ruffnect fan ($1,875) 2.13 Cost adder to provide latest level control philosohpy ($14,807.75) 2.14 Cost deduct to provide valve adjustment as per Devon Isolation Philosophy (-$4,729) 2.15 Cost adder to supply two(2) anodes ($4,905) 2.16 Total optional price: $8,865.75 **Tag #** 002-PK-01-1200 **Line Item Total** G/L Account : 6300150 WBS : 01-00348.01.02.03						**843,665.75**
00004	Building/Skid for pump package Building/Skid for pump package Building/Skid for pump package **Tag #** 002-BU-27-1000 **Line Item Total** G/L Account : 6300150 WBS : 01-00348.01.02.03		1.000 1.000	AU EA	09/09/2013 139,000.00	139,000.00	**139,000.00**

Gross Price	:	CAD	3,376,624.15
Discount	:	CAD	0.00
Freight	:	CAD	0.00
Surcharge	:	CAD	0.00
Total	:	CAD	3,376,624.15

5Blue Process Equipment Inc.

- [x] Approved
- [ ] Approved As Noted
- [ ] Not Approved. Resubmit
- [ ] For Information

29/04/13

Signature Date

devon

REQUEST FOR INFORMATION

ATTENTION:	DAVID SHEN	RFI NO.:	1
COMPANY:	WORLEY PARSONS / DEVON	ISSUER NAME:	SHAUN ECKFORD
PROJECT #:	FE-CPF-M022	CONTRACTOR:	5BLUE PROCESS EQUIPMENT
AREA:	FERRIER CENTRAL PROCESSING	ISSUE DATE:	JUNE 21, 2013
EQUIP TAG #:	5B1106,07,08-20	DISCIPLINE:	ENGINEERING

PRIORITY: ☐ EMERGENCY ☐ HIGH ☒ NORMAL

DATE RESPONSE REQUIRED BY: REASON:

REFERENCE DRAWING(S):

Document/Drawing #	Sheet	Revision	Document Type	Corresponding CWP
5B1106-02-DR-00-001 5B1107-02-DR-00-001 5B1108-02-DR-00-001	1	A	ACAD DRAWING	

DESCRIPTION OF PROBLEM (attach sketch if necessary for clarification): ☐ Attachments

Please advise if small bore pipe <1.5 NPS for drains/vents/fuel gas on all packages can be threaded (NPT). All heat medium lines will remain SW

CORRECTIVE ACTION: ☐ TAKEN ☒ PROPOSED as follows

Use threaded connections on <1.5 NPS (threaded) for drains/vents/fuel gas on all three packages.

PURPOSE OF THIS REPORT: ☐ For INFORMATION Only ☒ Requires APPROVAL ☒ Requires RESPONSE

APPROVAL / RESPONSE: ☐ Corrective Action APPROVED ☐ CORRECT as follows

APPROVAL / RESPONSE BY:

Name: (print) Sign: Date:

Company: Title:

TYPE OF CHANGE: ☐ Repair ☐ Rework ☐ Scope Change ☒ In-Scope

CHANGE ORDER REQUIRED: ☐ Yes ☒ No TYPE: ☐ CHANGE ORDER NOTICE ☐ CHANGE ORDER REQUEST CHANGE ORDER #:

Schedule Impact ☒ No ☐ Yes Number of Days:

Cost Impact ☒ No ☐ Yes Estimated Cost:

WORK COMPLETE: ☐ Yes ☐ No DRAWING REDLINE REQUIRED: ☐ Yes ☒ No

Contractor (print): Shaun Eckford Sign: Date: 21/06/13

Devon Rep. (print): Sign: Date:

DISTRIBUTION:

devon

REQUEST FOR INFORMATION

ATTENTION:	DAVID SHEN	RFI NO.:	2
COMPANY:	WORLEY PARSONS / DEVON	ISSUER NAME:	SHAUN ECKFORD
PROJECT #:	FE-CPF-M022	CONTRACTOR:	5BLUE PROCESS EQUIPMENT
AREA:	FERRIER CENTRAL PROCESSING	ISSUE DATE:	JUNE 21, 2013
EQUIP TAG #:	5B1106,07,08-20	DISCIPLINE:	ENGINEERING

PRIORITY: ☐ EMERGENCY ☐ HIGH ☒ NORMAL

DATE RESPONSE REQUIRED BY: REASON:

REFERENCE DRAWING(S):

Document/Drawing #	Sheet	Revision	Document Type	Corresponding CWP
5B1106, 5B1107, 5B1108 Package	1	A	ACAD DRAWING	

DESCRIPTION OF PROBLEM (attach sketch if necessary for clarification): ☐ Attachments

5BLUE FEELS, BASED ON SUPPORTING DOCUM ENTATION FROM THE DEVON PIPING SPECIFICATION (GS-5100) THAT PIPE STRESS ANALYSIS (CEASAR II, OR ANOTHER RECOGNIZED METHOD) WITHIN THE SKID PACKAGE BOUNDARY IS NOT REQUIRED. WE HAVE BEEN INSTRUCTED TO ANCHOR THE MAIN PROCESS PIPING LINES AT THE SKID EDGE, THUS ELIMINATING ANY LOAD TRANSFER TO THE END USER PIPING, OUTSIDE THE BUILDING WALL. 5BLUE WILL USE INTERNAL DESIGN METHODS TO SELECT THE ANCHOR'S AT THE SKID EDGE, FOR THE REQUIRED LOADING, THUS LEAVING THE END USER WITH THE REQUIRED CONFIDENCE THAT THEIR PIPING EXTERNAL TO THE SKID PACKAGE, WILL HAVE NO INDUCED LOADING. WE HAVE BEEN ASKED TO DO PIPE STRESS ANALYSIS REGARDLESS.

CORRECTIVE ACTION: ☐ TAKEN ☒ PROPOSED as follows

PER 4.9 (GS-5100), PIPE STRESS ANALYSIS IS REQUIRED PER THIS DOCUMENT (GS-5100). PER 4.9.3 (GS-5100), CS/SST PRESSURE PIPING SHALL BE SUBJECT TO THE STRESS ANALYSIS REQUIREMENT OF FIG 4.1. PER FIG 4.1 (GS-5100) A SIMPLE STRESS ANALYSIS IS ONLY REQUIRED. A SIMPLE STRESS ANALYSIS IS ONLY COMPOSED OF NORMAL THICKNESS CALCS AND VISUAL FOR ROUTING AND SUPPORT LOCATIONS. BASED ON THIS AND THE FACT THAT THE PIPING WILL NOT SEE OVER 1000 THERMAL OR MECHANICAL CYCLIC LOADS (CYCLIC LOADING EXCEPT FOR START UP AND SHUTDOWN), WE FEEL THAT STRESS ISO'S OR STRESS ANALYSIS IS NOT REQUIRED. REQUIRING US TO PERFORM THE STRESS ISO'S WILL HAVE A DELIVERY IMPACT THAT COULD POSSIBLY ADD 3-4 WEEKS TO THE DELIVERY. WE CAN PROVIDE A FIRM ESTIMATE OF THE DELIVERY EXTENSION UPON, REQUEST.

PURPOSE OF THIS REPORT: ☐ For INFORMATION Only ☒ Requires APPROVAL ☒ Requires RESPONSE

APPROVAL / RESPONSE: ☐ Corrective Action APPROVED ☐ CORRECT as follows

APPROVAL / RESPONSE BY:

Name: (print) Sign: Date:

Company: Title:

TYPE OF CHANGE: ☐ Repair ☐ Rework ☒ Scope Change ☒ In-Scope

CHANGE ORDER REQUIRED: ☐ Yes ☒ No TYPE: ☐ CHANGE ORDER NOTICE ☐ CHANGE ORDER REQUEST CHANGE ORDER #:

Schedule Impact ☐ No ☒ Yes Number of Days: 15 TO 20 WORKING DAYS (PER UNIT)

Cost Impact ☐ No ☐ Yes Estimated Cost:

WORK COMPLETE: ☐ Yes ☐ No DRAWING REDLINE REQUIRED: ☐ Yes ☒ No

Contractor (print): Shaun Eckford Sign: Date: 21/06/13

Devon Rep. (print): Sign: Date:

DISTRIBUTION: