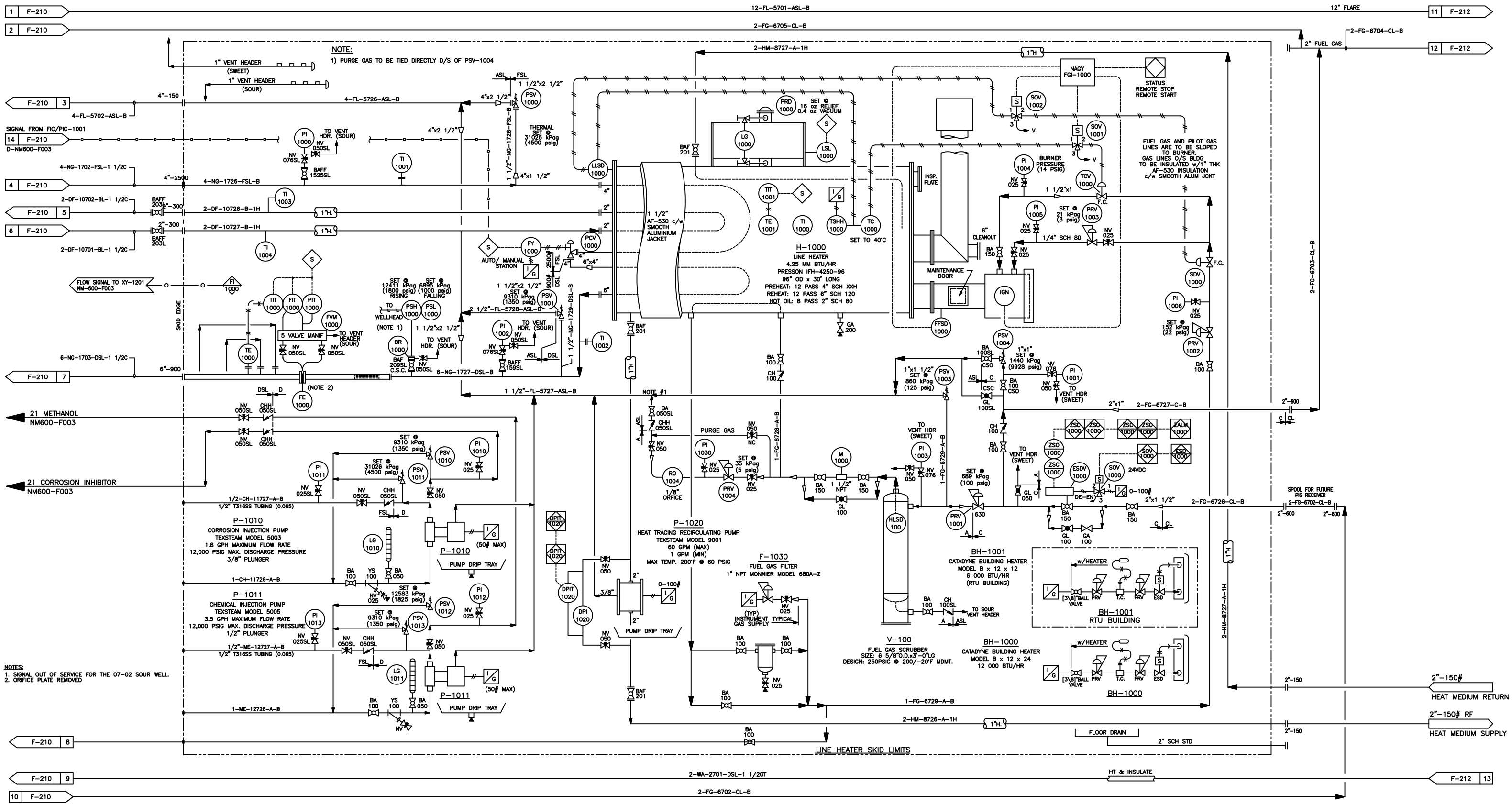

NOTES:
1. SIGNAL OUT OF SERVICE FOR THE 07-02 SOUR WELL.
2. ORIFICE PLATE REMOVED

DWG. NO.	REFERENCE DRAWINGS	DEVON PROJECT	REV	REVISIONS	DATE (yy.mm.dd)	BY	CHK'D	APP'D	OWNR APP'D
		0101812	6	IFC – 07-01 (B/H) TIE-IN (TG JOB# 212112)	12.12.07	RD			
		0101812	5	IFA – 07-01 (B/H) TIE-IN (TG JOB# 212112)	12.11.19	DDH			
			4	AS BUILT PER FIELD MARK UPS	10.05.17	KOC	WC		
			3	ISSUED FOR CONSTRUCTION	07.11.27	KOC	WC		
			2	ADD SIGNAL TO XY-1201	07.11.23	KOC	WC		
		0101812	7	AS-BUILT PER FIELD MARK-UPS(TG JOB# 212112)	13.07.22	IO			

ENGINEER AND PERMIT STAMPS

REVISION 7 "AS BUILT"
BY: TG ENGINEERING INC.
PREVIOUS REVISION 6
BY: TG ENGINEERING INC.
PROFESSIONAL ENG.: TARA PASVEER
PERMIT TO PRACTICE: P 5346

CADD FILE:

DESIGNED		
DRAWN	KH	JULY 1999
CHECKED		
PROCESS CK.		
MECH. CK.		
STRUCT. CK.		
ELECT. CK.		
OWNER APP.		
OWNER APP.		

TG ENGINEERING INC.

devon

LELAND HORSE
07-02 SOUR WELLSITE FACILITY
P & ID –LINE HEATER
LSD. 07-02-59-26 w5m

CONTR JOB NO	SCALE	DWG. NO.	DEVON PROJ.	
212112	NONE	NM600-F004	0101812	7