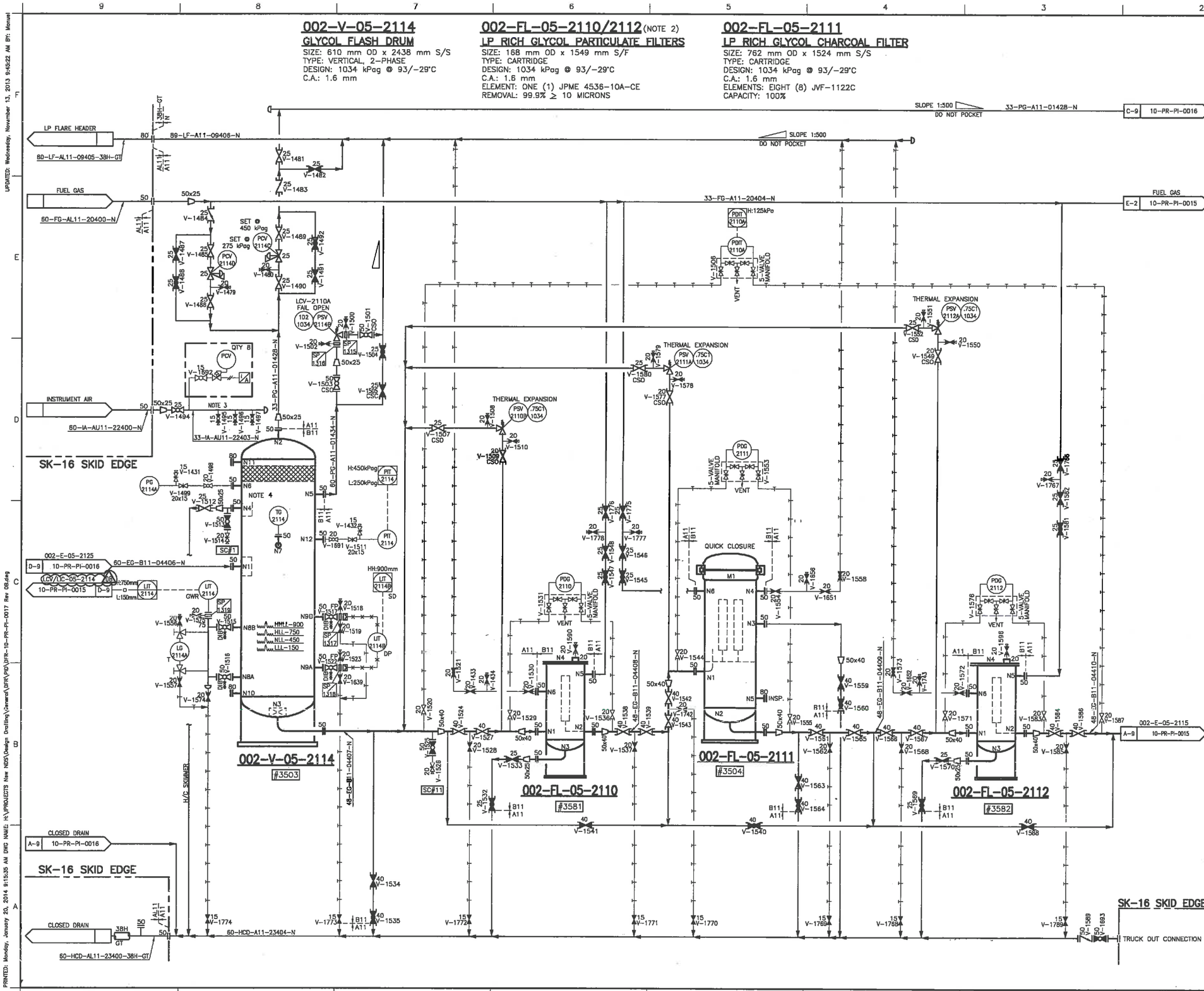

GENERAL NOTES:

1. LOW POINT DRAINS/HIGH POINT VENTS ADDED WHERE REQUIRED.
2. ELEMENT AND HOUSING SUPPLIED BY JONELL.
3. EACH INSTRUMENT AIR BRANCH HEADER TO INCLUDE 2 SPARE VALVE CONNECTIONS AND AN ADDITIONAL VALVE AT THE END OF THE HEADER FOR BLOWDOWN.
4. TOP OF HC SKIM BOX LOCATED 810mm ABOVE BOTTOM SEAM OF VESSEL.
5. ALL INTERCONNECTING PIPING WITHIN SHALLOWCUT BATTERY LIMIT IS BY TDE.
6. ALL INSTRUMENTS SYMBOLS ON THIS PID TO BE PREFIXED BY 05.

PROFESSIONAL ENGINEER
STEVE JACKSON
ALBERTA
JAN 20, 2014

NO.	REVISION	DATE	BY
0B	REVISED AS MARKED	NOV.06/13	MFF
0A	REVISED AS MARKED	OCT.02/13	SSE
0	RELEASED FOR FABRICATION	JUL.17/13	MFF

ELECTRICAL: | I & V: | CONTROLS: | PROCESS: | PROJECT:

PROJECT NAME: FERRIER CENTRAL PROCESSING FACILITY

CLIENT: DEVON CANADA c/o WORLEY PARSONS

DOCUMENT NAME: GLYCOL REGENERATION PIPING AND INSTRUMENTATION DIAGRAM

THERMO DESIGN ENGINEERING LTD.
OIL & GAS PRODUCTION EQUIPMENT
DESIGN • FABRICATION • INSTALLATION
EDMONTON, ALBERTA, CANADA
APEGGA PERMIT NUMBER: P2800

THIS DRAWING IS THE CONFIDENTIAL PROPERTY OF TDE AND IS ISSUED ON THE UNDERSTANDING THAT NOTHING IS TO BE COPIED OR COMMUNICATED TO A THIRD PARTY WITHOUT THE WRITTEN AUTHORIZATION OF TDE.

P. ENG. STAMP:

TDE JOB NUMBER: 12-118

DOCUMENT NUMBER: DFR-10-PR-PI-0017 | ITEM: . | SHEET: . | REV: 0B

UPDATED: Wednesday, November 13, 2013 9:45:22 AM BY: Manuel
PRINTED: Monday, January 20, 2014 9:15:35 AM DWG NAME: H:\PROJECTS New NDS\Design Drafting\General\DFR\PID\DFR-10-PR-PI-0017 Rev 0B.dwg