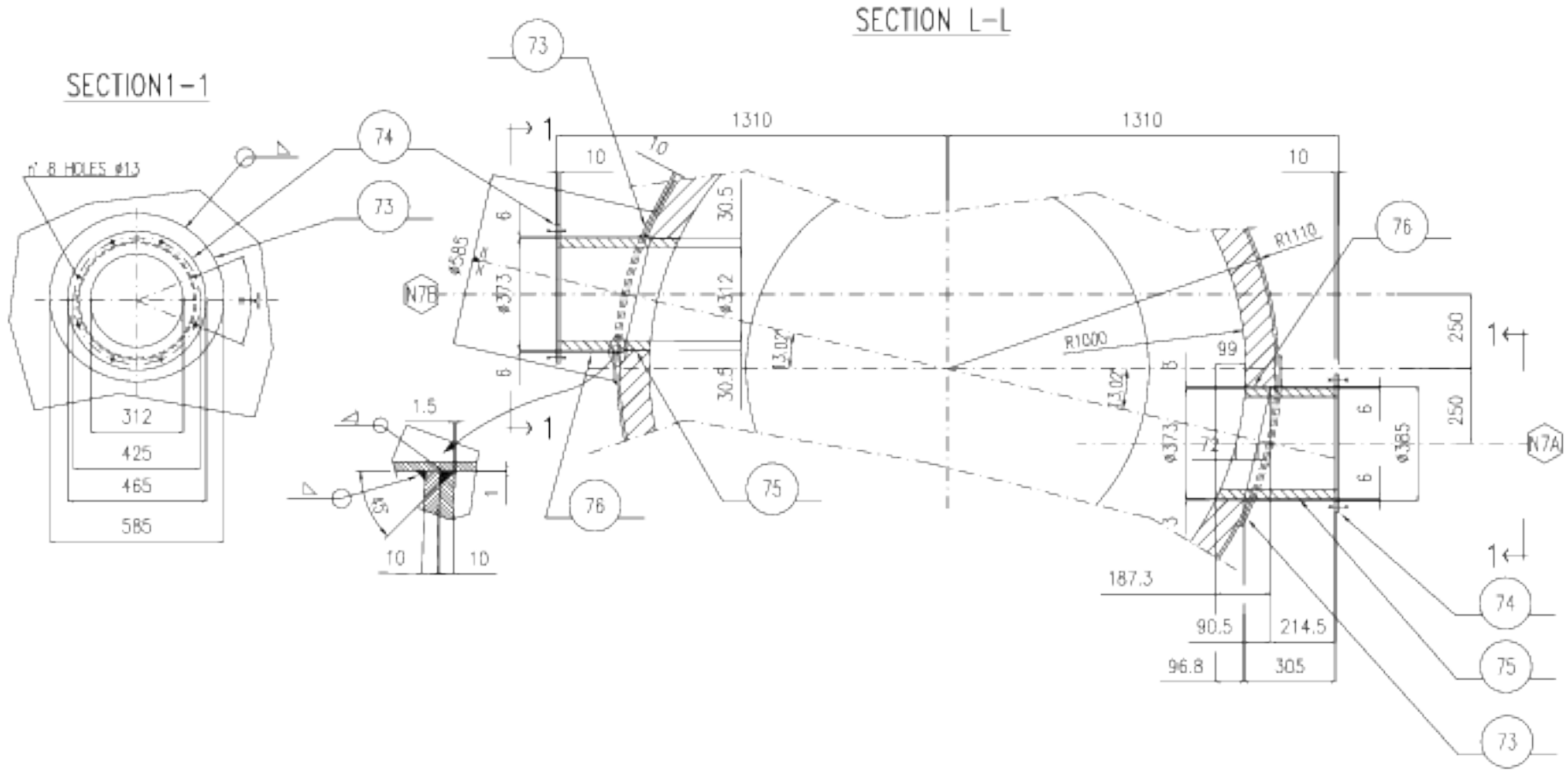

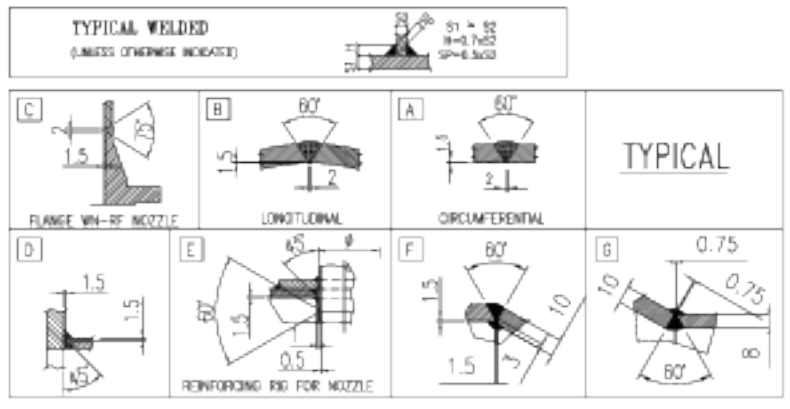

FOR ASSEMBLY SEE DWG.165-102

REV. REV.	DATA DATE	DESCRIPTION DESCRIPTION	ESEGUITO PREPARED	CONTROLLATO CHECKED	APPROVATO APPROVED
1	21.12.2007	AS BUILT	E.M.	S.B.	E.G.
0	16.05.2007	ISSUED FOR APPROVAL	E.M.	S.B.	E.G.

CLIENTE CLIENT	TALISMAN ENERGY Inc.	IMPIANTO PLANT	TALISMAN TEEPEE GAS
ORDINE ORDER	GP301581 Rev.1	LOCALITA' LOCALITY	CANADA

HAMWORTHY COMBUSTION

HAMWORTHY COMBUSTION ENGINEERING SRL

VIA GIANNICI 11 - 20035 LESSONA MILAN - ITALY TEL. 039-2450049 FAX 039-2450008 E MAIL info@hamworthy-combustion.it

SCALA SCALE 1:15	DESCRIZIONE DESCRIPTION	DETAILS REPLACEMENT OF EXISTING INCINERATOR ITEM: FF-25.01	NR. REF. OUR REF. ITT1565
DATA DATE 23.04.2007			N. 1565-111
			ESEGUITO PREPARED E.M.
			CONTROLLATO CHECKED S.B.
			APPROVATO APPROVED E.G.

RIGETTO DISEGNO NON PUO' ESSERE COPIATO, RIPRODOTTO O RISTRATTO A TERZI SENZA PREVENTIVA AUTORIZZAZIONE SCRITTA

THIS DRAWING SHALL NOT BE COPIED, REPRODUCED, LENT OR OTHERWISE DISPOSED OF WITHOUT WRITTEN CONSENT.

100 mm